PIMA COUNTY DEVELOPMENT SERVICES REPORT TO THE PIMA COUNTY PLANNING & ZONING COMMISSION

CASE: **P16CU00004**
PIMA COUNTY (FAIRGROUNDS) — S. HOUGHTON ROAD

OWNERSHIP: Pima County, Arizona
(Pima County Fairgrounds Complex)

APPLICANT: Insite, Inc. on behalf of Verizon Wireless
c/o Christine Tucker
2035 E. Gondola Lane
Gilbert, AZ 85234

LOCATION: On the grounds of the Pima County Fairgrounds located at 11300 S. Houghton Road. The specific proposed tower site is in and amongst the Fairgrounds' main complex of exhibit buildings.

REQUEST: This is a Conditional Use Permit request (Type III) for a new one hundred foot (100') monopole communications tower, with the proposed Verizon Wireless antennae array being mounted at a centerline height of seventy-five feet (75'). The proposed monopole structure allows for future, co-located wireless carriers to position their antennae array(s) above the proposed Verizon array. Given the proposed tower location and its placement within the Pima County Fairgrounds building complex, the applicant proposes no camouflage to the tower. Pima County has been fully involved in the discussions and negotiations with respect to this tower and is in support of the proposed location to address a gap in coverage that exists within and around the Fairgrounds complex.

PETITIONER'S STATEMENT REGARDING THE TYPE OF USE PROPOSED

"Verizon Wireless is proposing to locate a new monopole cell site on the Pima County Fairgrounds property. The proposed use of this facility is to provide coverage to the area in order to fill a significant gap that currently exists."

PETITIONER'S STATEMENT REGARDING COMPATIBILITY

"The use is proposed in order to fill a significant gap in cellular service at the Pima County fairgrounds and surrounding area. This site will be compatible with the fairgrounds area as there are existing light poles in the area as well as many fairground structures. There is also an existing tall flagpole in the immediate vicinity of the proposed facility."

The petitioner has provided a complete submittal package, including various supporting materials, coverage/propagation plots, before and after photo-simulations, and a development plan of the property and proposed tower facility.

HEARING ADMINISTRATOR'S CONSIDERATIONS

This request proposes a new one hundred foot (100') tall communications tower, leaving it a galvanized aluminum gray color. The Hearing Administrator views this as an acceptable approach, given the tower's integration into an existing Fairgrounds building complex that already has significant vertical elements via numerous light standards and utility poles. Furthermore, there are no residential land uses anywhere in close proximity to the Fairgrounds property.

Wireless Service Coverage and "Gap" Considerations

The Federal Telecommunications Act of 1996 encourages all new wireless installations that introduce or enhance reliable wireless coverage in those areas where a "gap" in coverage or service-quality presently exists.

A set of before and after propagation plots have been provided by the applicant to illustrate the existing coverage gap that typifies the area. The plots indicate that the existing tower is centered within a large area wherein the coverage is generally in the >/= -90 dBm range. With the proposed new antennae array in place, the entire surrounding area is upgraded to the >/= -85 dBm level, the best category of their rating scale.

Comprehensive Plan Considerations

The Pima County Comprehensive Plan designates this property as *Military Airport (MA)* due to its location within the Davis-Monthan Airforce Base (DMAFB) approach-departure corridor.

This particular tower proposal has been vetted by Pima County, during its negotiations with Verizon Wireless, in full consideration of the *MA* designation and other factors and has been determined that the tower can be located as proposed without causing inconsistency with the comprehensive plan and without creating unsafe conditions for DMAFB operations.

In consideration of the above, the request is found by the Hearing Administrator to not be in conflict with the Comprehensive Plan.

Zoning and Land Use Considerations

The subject parcel is zoned RH (Rural Homestead), as is all of the surrounding property encompassing the Fairgrounds property.

Other Vertical Elements in the Surrounding Area

There is significant existing verticality in the immediate and surrounding vicinity in the form of numerous light standards and utility poles.

HEARING ADMINISTRATOR'S RECOMMENDATION

After visiting the subject property and after considering all of the above and reviewing the applicant's submitted materials, the Hearing Administrator finds the proposed **communications tower** to be an acceptable use on the subject property and within the surrounding context.

It is therefore the recommendation of the Hearing Administrator that the Planning & Zoning Commission recommend **APPROVAL** of this Type III conditional use permit subject to the following Standard and Special Conditions:

Standard Conditions

1. Adherence to all requirements of Section 18.07.030.H and Section 18.07.040.A.4 (General Regulations and Exceptions) of the Pima County Zoning Code.

Special Conditions

1. The new/resultant total tower height shall be no more than one hundred feet (100').
2. The tower will be located on the property as depicted on the submitted development/site plan.
3. The tower will be camouflaged through painting it an aluminum/flat gray color.
4. The on-the-ground equipment area will be secured with six foot (6') tall chain link fencing as shown on the applicant's submitted materials.

SONORAN DESERT CONSERVATION CONCEPT PLAN/ENVIRONMENTAL ISSUES

Comprehensive Plan Regional Environmental Policies — Conservation Lands System

In December, 2001 the Board of Supervisors incorporated the Maeveen Marie Behan Conservation Lands System (MMB-CLS) into the Comprehensive Plan 2001 Update as the Regional Environmental Policies. The MMB-CLS is the heart of the Sonoran Desert Conservation Plan (SDCP). On June 21, 2005, the Board of Supervisors amended the Comprehensive Plan Regional Environmental Policies and the MMB-CLS to reflect recommendations from the SDCP Science Technical Advisory Committee that were based on new scientific and technical data. As adopted, Conservation Guidelines associated with the MMB-CLS establish conservation objectives for a variety of projects (e.g. rezoning actions, comprehensive plan amendments, Type II and Type III conditional use permits, etc.) that require a discretionary decision by the Board of Supervisors. Conservation objectives include:

- Important Riparian Areas — 95% undisturbed natural open space
- Biological Core Management Areas — 80% undisturbed natural open space
- Special Species Management Areas — 80% undisturbed natural open space
- Multiple Use Management Areas — 66-2/3% undisturbed natural open space

The subject tower site is located within an area that is **OUTSIDE OF** the Maeveen Marie Behan Conservation Lands System.

Biological Impacts Report

On July 17, 2001, the Board of Supervisors adopted Ordinance No. 2001-103, which requires the applicant's notice to the US Fish and Wildlife Service (USFWS) staff regarding the pending matter, and staff commentary on biological resources and development impacts of the subject site and proposal.

Staff Commentary on Biological Impacts

Staff has reviewed this application and finds that: 1) its approval will not affect any resources essential to Pima County's biological conservation priorities; and 2) it will not be in conflict with the Regional Environmental Policies of the 2001 Comprehensive Plan Update. This application proposes the construction of a new tower and equipment area on Fairgrounds property that is already disturbed by the existing buildings, parking, etc. in the immediate area. No significant impact upon native desert specimens will occur.

Facts Confirmed by the Pima County Geographic Information System (GIS)

The following facts are confirmed by the Pima County GIS and the Sonoran Desert Conservation Plan maps with respect to this conditional use permit request:

Cactus Ferruginous Pygmy Owl. The subject property is not located within an area that is designated as Former Critical Habitat, nor Draft Recovery Area. This site is not located within a Priority Conservation Area (PCA) for this species.

Western Burrowing Owl. The subject property is not within the Priority Conservation Area (PCA) for this species.

Pima Pineapple Cactus. The subject property is located within an area that is within the Priority Conservation Area (PCA) for this species.

Needle-Spined Pineapple Cactus. The subject property is located within an area that is outside of the known range for the Needle-Spined Pineapple cactus. It is not within the Priority Conservation Area (PCA) for this species.

DEPT. OF TRANSPORTATION RECOMMENDATION

The Department of Transportation will review this project as need be during the Development Plan process.

attachments

cc: Carmine DeBonis, Director, Development Services
Yves Khawam, Chief Building Official
Chris Poirier, Planning Official
Carmine DeBonis, Chief Zoning Inspector
Pima County, Owner
Christine Tucker of Insite, Inc. (on behalf of Verizon Wireless), Applicant

PIMA COUNTY
DEVELOPMENT SERVICES DEPARTMENT
201 N. Stone Avenue, 1st Floor
Tucson, Arizona 85701-1207

CARMINE DeBONIS
Director

Phone: (520) 740-6520
FAX: (520) 798-1843

MEMORANDUM

TO: Members of the Pima County Planning & Zoning Commission

FROM: Jim Portner, Pima County Hearing Administrator

SUBJECT: **P16CU00004 – PIMA COUNTY FAIRGROUNDS – S. HOUGHTON RD. Type III Conditional Use Permit Request for a new Communications Tower**

DATE: March 21, 2016

This memorandum is intended to assist the members of the Planning & Zoning Commission in its evaluation of the above-referenced Type III request for a new communications tower. Per the Federal Telecommunications Act of 1996, twenty-one (21) criteria were established which can be considered by the local zoning authority in its decision to approve or deny such requests.

These twenty-one criteria are listed below (in *italics*), with a brief commentary on each for the Commission's consideration:

1. *Amount of compliance with permit requirements.* A Type III CUP is required because this is a new tower request. The applicant has initiated this permitting process with the CUP application that is before you.

2. *Staff approval or disapproval.* Not applicable; the Type III CUP process calls for a recommendation by the Hearing Administrator, P&Z and a final decision by the Board of Supervisors.

3. *Zoning approval or disapproval.* Not applicable; same comment as Item 2 above. This site is zoned RH (Rural Homestead).

4. *Other towers in the same zoning classification.* Other towers have previously been approved in Pima County within the same zone.

5. *Other towers in other zoning classifications.* Pima County has previously approved towers in the SH, GR-1, RH, SR, CR-1, and CR-4 residential zones, as well as in the CB-1 and CB-2 business zones.

6. *Amount of neighborhood opposition and whether it is substantial and supported by factual evidence.* There has been no neighborhood opposition received by staff on this request at the time this Memorandum's preparation.

7. *Type of neighborhood opposition.* None received to date.

8. *Nature of neighborhood opposition, whether aesthetic, etc.* Not applicable, per above.

9. *Amount, type, and nature of evidence offered by wireless provider.* Contained within application packet and discussed further in the staff report; additional information may be sought by the Commission at hearing.

10. *Expert testimony.* None to date.

11. *Height of tower.* The proposed tower would be one hundred feet (100') tall and would be camouflaged only through its painting with an aluminum/flat gray color.

12. *Color of tower.* The tower is proposed to be an aluminum/flat gray color.

13. *Possibilities of camouflage.* See Item #12 above. No camouflaging is proposed, which is viewed by the Hearing Administrator as being acceptable for this specific location, given the tower's location in an amongst the existing complex of Fairground buildings and the presence of significant vertical structures (light standards and utility poles) in the immediate area.

14. *Service coverage issues; such as whether a gap would be created that would impede emergency service.* See applicant Supplemental Information response #4 and the Hearing Administrator's staff report, wherein the existing and proposed coverage characteristics are discussed. In short, the applicant asserts that a coverage gap exists within the surrounding area with respect to signal strength. This gap will be properly addressed by the installation of the proposed new antennae array.

15. *Alternative sites explored.* See applicant Supplemental Information response #5, wherein they detail the several different other potential locations that were studied.

16. *Possibilities for co-location on an existing tower.* See applicant Supplemental Information response #6, wherein they explain that certain co-location possibilities were pursued, but which were rejected for various reasons.

17. *Possibilities for more, shorter towers.* See applicant Supplemental Information response #7, wherein they state that the proposed 100' tower (with their antennae array placed at the 75' height) is necessary to meet the Verizon coverage needs.

18. *Provision for tower removal.* See applicant Supplemental Information response #8, wherein they state that they will removed their equipment upon termination of the lease with Pima County.

19. *Possibilities for this tower serving as a co-location site for other providers.* See applicant Supplemental Information response #9, wherein they state that they have agreed to build the 100' proposed tower so as to allow for co-location by Pima County and other wireless providers.

20. *Time taken to make the decision (by the local zoning authority).* This item is before the Commission for the first time at its April 27, 2016 public hearing. Federal law encourages a timely response by the local zoning authority. It is recommended that the Commission vote on their formal recommendation to the Board of Supervisors at the April 27, 2016 meeting.

21. *Government contracts with the wireless provider.* The applicant indicates that Verizon has government contracts in force with local, state, and federal agencies.

Pima County
Development Services

ZONING ENFORCEMENT DIVISION
201 N. Stone Avenue, 1st Floor
Tucson, Arizona 85701-1207
(520) 724-6675

APPLICATION FOR CONDITIONAL USE PERMIT

OWNER: Pima County (Contact Mike Holmes) **PHONE:** 520-226-6768

ADDRESS: 130 W Congress St. **CITY:** Tucson **ZIP:** 85701

APPLICANT (*if not owner*) Christine Tucker on behalf of Verizon Wireless **PHONE:** 480-586-5180

APPLICANT EMAIL ADDRESS: tucker@insite-inc.com

ADDRESS: 2035 E Gondola Ln. **CITY:** Gilbert, AZ **ZIP:** 85234

PROPERTY ADDRESS: 11300 S Houghton Rd., Tucson, AZ 85747 **ZONE:** RH

TAX CODE(S): 305-01-004 N

TOWNSHIP, RANGE SEC.: 16 S, 15 E, 14

LOT DIMENSIONS: _____ **LOT AREA:** 46,576 sq. ft.

TYPE OF USE PROPOSED FOR PROPERTY (BE SPECIFIC) : Verizon wireless is proposing to locate a new monopole cell site on the Pima County Fairgrounds property. The proposed use of this facility is to provide coverage to the area in order to fill a significant coverage gap that currently exists.

STATE THE REASONS WHY THE USE IS PROPOSED AND WHY YOU THINK IT WOULD BE COMPATIBLE WITH THE SURROUNDING AREA:

The use is proposed in order to fill a significant coverage gap in cellular service at the Pima County fairgrounds and surrounding area. This site will be compatible with the fairgrounds area as there are existing light poles in the area as well as many fairground structures. There is also an existing tall flag pole in the immediate vicinity of the proposed facility.

ESTIMATED STARTING DATE: _____ **ESTIMATED COMPLETION DATE:** _____

THE FOLLOWING DOCUMENTS ARE REQUIRED:

1. Preliminary Development Plan
   a. 5 copies are needed for Type I **(In accordance with Pima County Fee Schedule)**
   b. 10 copies are needed for Type II **(In accordance with Pima County Fee Schedule)**
   c. 10 copies are needed for Type III **(In accordance with Pima County Fee Schedule)**
   5 – 24" X 36" and 5 – 11" X 17"
   (Make check payable to Pima County Treasurer)
2. Assessor's Map showing location and boundaries of the property.
3. Assessor's Property Information showing ownership of the property.
4. Letter of Authorization if applicant is not the owner
5. Floor Plan that pertains to interior access or use if required
6. Biological Impact Report ** - For Type 2 or 3 permit requests

I, the undersigned, represent that all the facts in this application are true to the best of my knowledge.

_____ _____
Signature of Applicant Date

_____ _____
Print Name Applicant Phone Number

Applicant agrees to provide staff with written proof of notice to the United States Fish and Wildlife Service of this conditional use request at least 15 days prior to the date of the public hearing. Failure to do so may result in cancellation of the public hearing. In addition, the applicant or authorized representative must appear in person at the public hearing to present the request, otherwise the case may be dismissed.

Please initial here: _____

OFFICE USE ONLY

Case #: _____ Case Title: _____

Type: _____ Fee: _____ Receipt Number: _____ Hearing Date: _____

Notification Area: _____ Sections: _____

Zoning Approval: _____

Special Conditions: _____

_____

_____

A request for continuance of an advertised application or a change in original request by applicant, must be accompanied by an additional fee.

** Applicant should consult with Pima County Planning staff to determine the extent to which this requirement applies to the subject property. The Biological Impact Report pertains to expected impacts on endangered and threatened species as identified in the Sonoran Desert Conservation Plan.

APPLICATION FOR CONDITIONAL USE PERMIT

SUPPLEMENTAL INFORMATION REQUIRED FOR COMMUNICATION TOWER REQUESTS

The Federal Telecommunications Act of 1996 requires local governments to address certain issues relating to the placement, construction and modification of wireless communication facilities, including cell towers, when reviewing conditional use permit requests. Hence, applicants must provide information on each of the following items as a part of their conditional use permit application.

1. Height & color of tower.---- ***The proposed monopole is 100' tall, and is typically galvanized metal, but can be painted upon request.***

2. Certification that tower will comply with all FAA, FCC and other applicable regulations.---- ***Verizon's standard practice is to comply with all FAA, FCC and other applicable regulations, and is required to by law. It is further stated in the lease agreement between Verizon Wireless and Pima County***

3. Possibilities of camouflage. ***---- As previously mentioned, Verizon is able to paint the monopole to match the surrounding area if requested by the local Jurisdiction or the Landlord.***

4. Service coverage. (Is there an existing gap in coverage that presently impedes regular or emergency telephone service? If so, how will that gap be improved by the proposed tower or utility pole replacement? Provide propagation maps showing coverage gap before and after tower placement.) ---- ***There is currently a gap in coverage at the Pima County Fairgrounds. A new cell site would enable first responders the ability to use Verizon wireless devices when responding to emergencies at the Fairgrounds.***

*5. Alternative sites explored. (Describe the alternate sites considered, including utility pole replacements, and explain in detail the reasons for their rejection. Be specific and thorough.) ----****Several sites were previously explored. A TEP pole near the entrance was first sought after, however it was later determined unviable due to TEP not being able to lease the ground space for Verizon's equipment cabinets. The existing light poles at the Pima Motor Sports Park/Musselman Honda Circuit, however Pima County would not approve the tenant to sublease to Verizon. The Andrada High School was also investigated. They were interested in leasing space to Verizon, however the State gave the land to Andrada with a stipulation that the property could only be used for educational purposes, and Verizon did not fit that criteria.***

6. Possibilities for co-location on an existing tower or utility pole replacement. (Provide information, including a map, on the existing towers in the coverage area and list the reasons why each co-location or pole replacement is not feasible. Include distance to nearest existing communication towers and utility

*poles that were considered. In detail describe why co-location was not possible. Provide coverage maps of alternate co-location or utility replacement options. Be specific and thorough.)---**The primary objective was to provide Verizon Wireless coverage at the Pima County Fairgrounds, where there currently is none, thus creating a gap in coverage. As previously mentioned, the first candidate Verizon pursued was a TEP electric pole. Verizon was proposing to locate its antennas on the pole, with its equipment cabinet in ROW. The first power pole was to the East of the Fairgrounds entrance, in a ROW off of Houghton Rd. Another power pole was located in a ROW off of Dawn Rd, just south of the Fairgrounds. The third location investigated was an existing, very tall light pole at the Musselman Honda Circuit Raceway. In all three cases, we were not able to secure ground rights for the location of Verizon's equipment cabinets. There are no existing cell towers in the 2 mile radius surrounding the Fairgrounds.***

*7. Possibilities for more, shorter towers.----**There is the possibility that Verizon could propose additional shorter towers in the future, to boost capacity if that ever becomes an issue. However, Verizon's current needs will be met with the proposed design of the 100' monopole, with their RAD center at 75'.***

*8. Provisions for tower removal.----**Upon termination of the lease with Pima County, Verizon will remove its equipment and leave the premises as it was prior to installation.***

*9. Possibilities of tower serving as a co-location site for other wireless providers.------**Verizon has agreed to build a 100' monopole for the purpose of allowing co-location not only with Pima County equipment, but also other carriers who may approach the County to request coverage at the Fairgrounds.***

*10. Government contracts with the wireless provider.-----**Verizon Wireless has existing contracts with most Jurisdictions around the country for use of City/County facilities and ROW for its wireless network. In addition, Verizon also has agreements with Dept of Transportation agencies around the country, Bureau of Land Management, Forest Service, the Veteran's Administration, AZ Board of Regents, to name a few.***

verizon wireless

TUC QUARTER MILE

11300 S HOUGHTON RD
TUCSON, AZ 85747

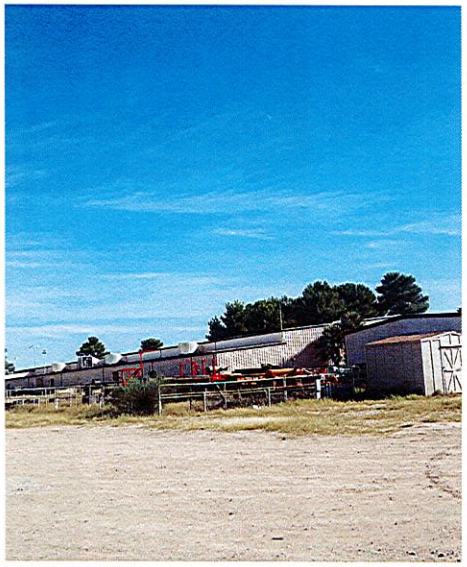

PROJECT PHOTO

SHEET INDEX

T-1	TITLE AND INFORMATION
LS-1	BOUNDARY DETAIL
LS-2	SURVEY DETAIL
LS-3	LEGAL
Z-1	SITE PLAN
Z-2	ENLARGED SITE PLAN & ANTENNA INFORMATION
Z-3	ELEVATIONS
Z-4	GENERAL EQUIPMENT INFORMATION

PROJECT INFORMATION

LESSEE	VERIZON
JURISDICTION	PIMA COUNTY
PARCEL NUMBER	305-01-004N
ZONING	RH
BUILDING CODES	2012 IBC 2011 NEC 2012 IFC 2012 IMC
OCCUPANCY	
EQUIPMENT CABINETS	N/A
MONOPOLE	U
CONSTRUCTION TYPE	
EQUIPMENT CABINETS	N/A
MONOPALM	N/A
LEASE AREA	875 S.F.
POWER COMPANY	TEP
FIBER COMPANY	COX

PROJECT TEAM

CLIENT

VERIZON WIRELESS
126 W GEMINI DR
TEMPE AZ 85283
CONTACT: RICK MIRANDA
PHONE: 602-390-9844

PROPERTY OWNER

PIMA COUNTY
130 W CONGRESS ST
TUCSON, AZ 85701
CONTACT: MIKE HOLMES
PHONE: 520-226-6768

TOWER OWNER

VERIZON WIRELESS

DESIGNER

P+S CONSULTING LLC
2036 N GILBERT RD
STE 2-433
MESA AZ 85203
CONTACT:
STEPHEN PHILLIPS
PHONE: 602-904-2108

SITE ACQUISITION

INSITE INC.
9665 E NARANJA AVE
MESA, AZ 85209
CONTACT:
CHRISTINE TUCKER
PHONE: 480-586-5180

SURVEYOR

RLF CONSULTING LLC
1214 N STADEM DR
TEMPE AZ 85281
CONTACT: RYAN FIDLER
PHONE: 480-445-9189

PROJECT DESCRIPTION

THIS PROJECT CONSISTS OF THE ADDITION OF EQUIPMENT CABINETS WITH EMERGENCY STAND-BY GENERATOR INSIDE A NEW COMPOUND. ALSO THE ADDITION OF (12) ANTENNAS, (12) REMOTE RADIO HEADS AND, (3) J-BOXES MOUNTED TO A NEW MONOPOLE.

PROJECT DIRECTIONS

FROM VERIZON WIRELESS HEAD WEST ON W GEMINI DR TOWARD S ASH AVE. TURN LEFT ONTO S ASH AVE. TURN RIGHT ONTO W GUADALUPE RD. TAKE THE 1ST LEFT ONTO S KYRENE RD. SLIGHT RIGHT TO STAY ON S KYRENE RD . CONTINUE ONTO W GROVE PKWY . SLIGHT LEFT ONTO S PRIEST DR. TURN RIGHT ONTO W ELLIOT RD. TURN LEFT TO MERGE ONTO I-10 E TOWARD TUCSON. TAKE THE HOUGHTON RD EXIT, EXIT 275. TURN RIGHT ONTO S HOUGHTON RD. TAKE RIGHT ONTO BREKKE ROAD AND THEN LEFT THROUGH FAIRGROUNDS GATE. FOLLOW SIGNS TO ADMINISTRATIVE BUILDINGS UNTIL YOU SEE THE SITE.

SYMBOLS

- KEYED NOTES
- REVISION
- ELEVATION NUMBER / SHEET NUMBER
- DETAIL SECTION NUMBER / SHEET NUMBER
- BUILDING SECTION NUMBER / SHEET NUMBER
- WALL SECTION NUMBER / SHEET NUMBER
- NORTH ARROW
- T.O. BUILDING ELEV = 11'-3" — ELEVATION MARKER
- PROPERTY LINE
- LEASE LINE
- CHAIN LINK FENCE
- WROUGHT IRON FENCE

VICINITY MAP

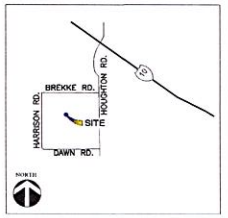

verizon wireless
126 W. GEMINI DR. TEMPE, AZ 85283
PHONE: (480) 777-4360
FAX: (480) 777-4391

P+S Consulting
Always here when you need us

PROPRIETARY INFORMATION

THE INFORMATION CONTAINED IN THIS SET OF DRAWINGS IS PROPRIETARY BY NATURE. ANY USE OR DISCLOSURE OTHER THAN THAT WHICH RELATES TO THIS PROJECT IS STRICTLY PROHIBITED WITHOUT THE WRITTEN CONSENT OF P+S CONSULTING LLC

DRAWN BY:	CHK:	APV:
SP	SCP	SCP

SITE NAME & ADDRESS:

TUC QUARTER MILE
11300 S HOUGHTON RD
TUCSON, AZ 85747

ISSUE STATUS:

△	DATE:	DESCRIPTION:
A	12/04/15	ISSUE FOR CLIENT REVIEW
0	01/11/16	ISSUE FOR ZONING SUBMITTAL

SHEET TITLE:

TITLE AND INFORMATION

SHEET NUMBER:

T-1

PROJECT META DATA

1. ELEVATIONS SHOWN HEREON ARE REPRESENTED IN *NORTH AMERICAN VERTICAL DATUM OF 1988 (NAVD88)* ESTABLISHED FROM GPS DERIVED ELLIPSOID HEIGHTS, APPLYING GEOID 09 SEPARATIONS CONSTRAINING TO NGS CORS STATIONS PROVIDED IN THE "ONLINE POSITIONING USER SERVICE" (OPUS) SOLUTION FOR THIS SPECIFIC SITE.
2. BEARINGS SHOWED HEREON ARE BASED UPON U.S. STATE PLANE NAD83 COORDINATE SYSTEM *ARIZONA STATE PLANE COORDINATE ZONE CENTRAL*, DETERMINED BY GPS OBSERVATIONS.
3. FIELD WORK FOR THIS PROJECT WAS PERFORMED ON 10/20/15.

SURVEYOR NOTES

1. ALL TITLE INFORMATION IS BASED UPON A COMMITMENT FOR TITLE INSURANCE PREPARED BY FIDELITY NATIONAL TITLE INSURANCE COMPANY, ORDER NO.: AZ-FCOP-IMP-N/A EFFECTIVE DATE: 09/18/2015.
2. SURVEYOR HAS NOT PERFORMED A SEARCH OF PUBLIC RECORDS TO DETERMINE ANY DEFECT IN TITLE.
3. THE BOUNDARY SHOWN HEREON IS PLOTTED FROM RECORD INFORMATION AND DOES NOT CONSTITUTE A BOUNDARY SURVEY OF THE PROPERTY.
4. SURVEYOR DOES NOT GUARANTEE THAT ALL UTILITIES ARE SHOWN OR THEIR LOCATIONS. IT IS THE RESPONSIBILITY OF THE CONTRACTOR AND DEVELOPER TO CONTACT BLUE STAKE AND ANY OTHER INVOLVED AGENCIES TO LOCATE ALL UTILITIES PRIOR TO CONSTRUCTION. REMOVAL, RELOCATION AND/ OR REPLACEMENT IS THE RESPONSIBILITY OF THE CONTRACTOR.

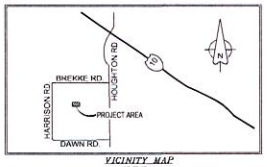

VICINITY MAP
N.T.S.

LINE TABLE		
LINE	LENGTH	BEARING
L1	648.01	N0° 23' 14"W
L2	4486.22	N89° 38' 28"E
L3	1884.64	S0° 25' 55"E
L4	1246.16	S89° 25' 08"W
L5	857.74	N0° 29' 47"W
L6	1101.21	S89° 19' 07"W
L7	186.96	S1° 49' 48"E
L8	110.35	S88° 10' 12"W
L9	178.60	N1° 49' 48"W
L10	540.00	S88° 10' 12"W
L11	275.00	S1° 49' 48"E
L12	515.47	N88° 10' 12"E
L13	266.25	S0° 41' 42"E
L14	49.42	S87° 33' 07"W
L15	59.64	S2° 29' 44"E
L16	850.00	S87° 30' 16"W
L17	73.82	S2° 29' 49"E
L18	870.74	S24° 42' 49"E
L19	217.71	S89° 31' 09"W
L20	658.91	S0° 27' 01"E
L21	659.34	N89° 31' 44"E
L22	1916.72	S0° 25' 55"E
L23	2569.12	S89° 46' 11"W
L24	4471.98	N0° 23' 14"W
L25	648.01	N89° 38' 28"E
L26	2683.31	N89° 38' 28"E
L27	75.00	S1° 09' 22"E
L28	1062.96	S1° 09' 22"E
L29	196.66	S88° 50' 38"W
L30	148.28	S87° 31' 06"W
L31	34.93	S88° 50' 38"W
L32	6.00	S1° 09' 22"E
L33	25.00	S1° 09' 22"E
L34	35.00	N88° 50' 38"E
L35	25.00	N1° 09' 22"W
L36	35.00	S88° 50' 38"W

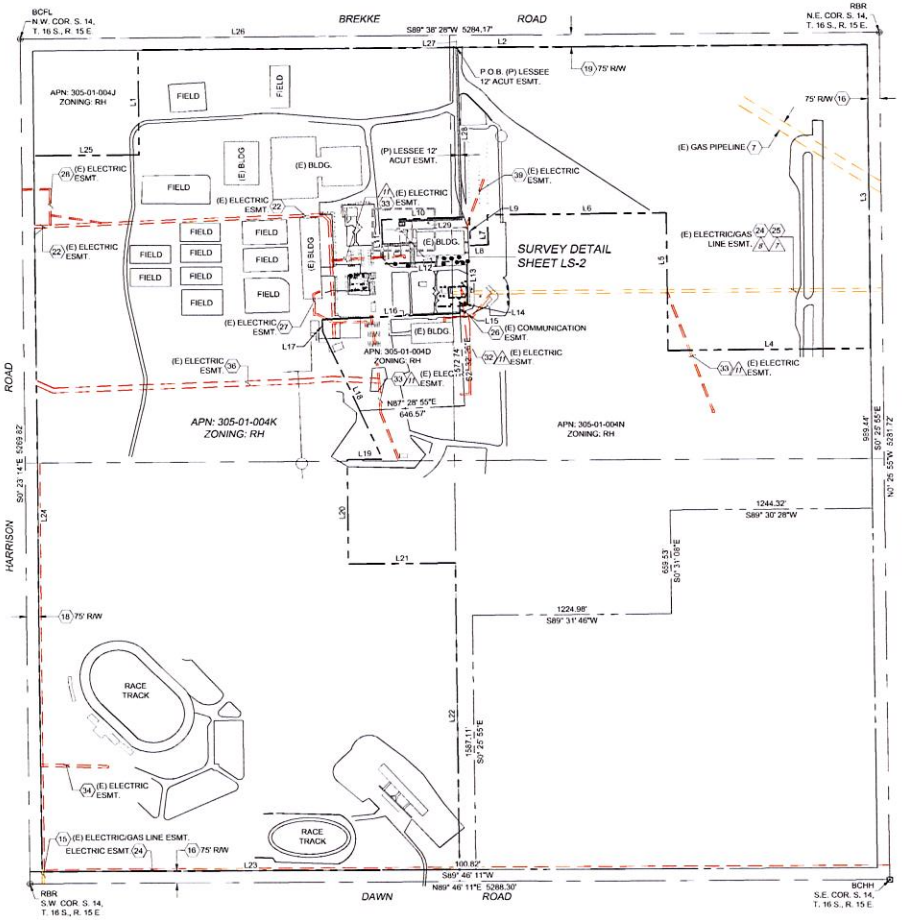

BOUNDARY DETAIL
SCALE: 1" = 350'

LEGEND

- BRASS CAP FLUSH
- BRASS CAP IN HANDHOLE
- BLDG TOP OF BUILDING
- D/W ACCESS DRIVEWAY
- ACUT ACCESS/UTILITY
- ESMT. EASEMENT
- BREAKLINE
- SCHEDULE B HEX
- POSITION OF GEODETIC COORDINATES
- PROPERTY LINE
- PROPERTY LINE (OTHER)
- RIGHT-OF-WAY LINE
- MONUMENT LINE
- CENTERLINE
- EASEMENT LINE
- CHAIN LINK FENCE
- WOOD OR IRON FENCE

verizon

126 W. GEMINI DR.
TEMPE, AZ 85283

P+S Consulting
Always here when you need us

FIELD BY:	JTS
DRAWN BY:	JTJ
CHECKED BY:	RLF

REVISIONS

NO.	DATE	DESCRIPTION
4	01/04/16	REVISION-JTJ
3	12/07/15	FINAL-JTJ
2	11/30/15	REVISION-JTJ
1	10/27/15	PRELIMINARY

RLF CONSULTING
LAND SURVEY • MAPPING SOLUTIONS
WWW.RLFCONSULTING.COM • 480-345-0250

EXPIRES 03/31/18

REUSE OF DOCUMENT
THE IDEAS & DESIGN INCORPORATED HEREON, AS AN INSTRUMENT OF PROFESSIONAL SERVICE, IS THE PROPERTY OF RLF CONSULTING, LLC & IS NOT TO BE USED FOR ANY OTHER PROJECT WITHOUT WRITTEN AUTHORIZATION OF RLF CONSULTING, LLC

PROJECT No.
14003009

SITE NAME:
TUC QUARTER MILE

SITE ADDRESS:
11300 S. HOUGHTON RD.
TUCSON AZ, 85747

SHEET TITLE:
BOUNDARY DETAIL

SHEET NO.	REVISION:
LS-1	3

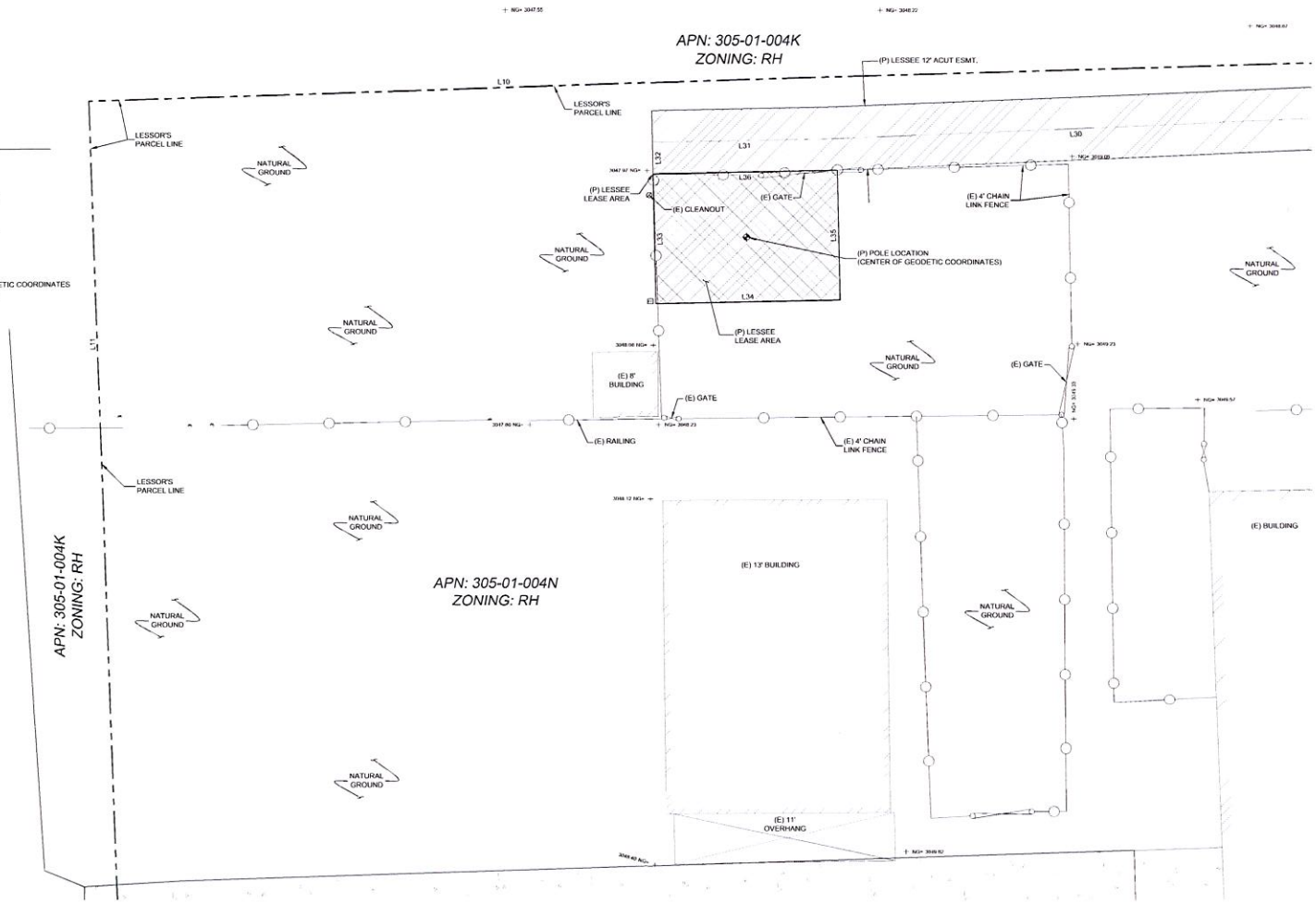

LEGEND

CS	CONCRETE
NG	NATURAL GRADE
PV	ASPHALT
SW	SIDEWALK
TBC	TOP BACK OF CURB
	SPOT ELEVATION
	ELECTRIC SWITCH
	STORM CLEANOUT
	BOLLARD
	DECIDUOUS TREE
	SCHEDULE B HEX
	POSITION OF GEODETIC COORDINATES
	CHAIN LINK FENCE

LINE TABLE

LINE	LENGTH	BEARING
L1	648.01	N0° 23' 14"W
L2	4486.22	N89° 38' 28"E
L3	1884.64	S0° 25' 55"E
L4	1246.16	S89° 25' 08"W
L5	857.74	N0° 29' 47"W
L6	1101.21	S89° 19' 07"W
L7	186.96	S1° 49' 48"E
L8	110.35	S88° 10' 12"W
L9	178.60	N1° 49' 48"W
L10	540.00	S88° 10' 12"W
L11	275.00	S1° 49' 48"E
L12	515.47	N88° 10' 12"E
L13	266.25	S0° 41' 42"E
L14	49.42	S87° 37' 07"W
L15	59.64	S2° 29' 44"E
L16	850.00	S87° 30' 16"W
L17	73.82	S2° 29' 49"E
L18	870.74	S24° 42' 49"E
L19	217.71	S89° 31' 09"W
L20	658.91	S0° 27' 01"E
L21	659.34	N89° 31' 44"E
L22	1916.72	S0° 25' 59"E
L23	2569.12	S89° 46' 11"W
L24	4471.98	N0° 23' 14"W
L25	648.01	N89° 38' 28"E
L26	2683.31	N89° 38' 28"E
L27	75.00	S1° 09' 22"E
L28	1062.96	S1° 09' 22"E
L29	196.66	S88° 50' 38"W
L30	148.28	S87° 31' 06"W
L31	34.93	S88° 50' 38"W
L32	6.00	S1° 09' 22"E
L33	25.00	S1° 09' 22"E
L34	35.00	N88° 50' 38"E
L35	25.00	N1° 09' 22"W
L36	35.00	S88° 50' 38"W

POSITION OF GEODETIC COORDINATES
LATITUDE 32° 02' 43.207" NORTH (NAD83)
LONGITUDE 110° 47' 00.360" WEST (NAD83)
ELEVATION @ GROUND= 3048.0' (NAVD88)

NORTH
09° 55' MAGNETIC DECLINATION

GRAPHIC SCALE
10 0 5 10 20 40
(IN FEET)
1 inch = 10 ft.

verizon
126 W. GEMINI DR.
TEMPE, AZ 85283

P+S Consulting
Always here when you need us

FIELD BY:	JTS
DRAWN BY:	JTJ
CHECKED BY:	RLF

REVISIONS

NO.	DATE	DESCRIPTION
4	01/04/16	REVISION-JTJ
3	12/07/15	FINAL-JTJ
2	11/30/15	REVISION-JTJ
1	10/27/15	PRELIMINARY

RLF CONSULTING
LAND SURVEY • MAPPING SOLUTIONS
WWW.RLFCONSULTING.COM

44007
RYAN L. FIDLER
EXPIRES 03/31/18

REUSE OF DOCUMENT
THE IDEAS & DESIGN INCORPORATED HEREON, AS AN INSTRUMENT OF PROFESSIONAL SERVICE, IS THE PROPERTY OF RLF CONSULTING, LLC & IS NOT TO BE USED FOR ANY OTHER PROJECT WITHOUT WRITTEN AUTHORIZATION OF RLF CONSULTING, LLC

PROJECT No.
14003009

SITE NAME:
TUC QUARTER MILE

SITE ADDRESS:
11300 S. HOUGHTON RD.
TUCSON AZ, 85747

SHEET TITLE:
SURVEY DETAIL

SHEET NO.
LS-2

REVISION:
3

LESSOR'S LEGAL DESCRIPTION (APN: 305-01-004K)

SECTION 14, TOWNSHIP 16 SOUTH, RANGE 15 EAST, OF THE GILA AND SALT RIVER BASE AND MERIDIAN, PIMA COUNTY, ARIZONA.

EXCEPT THAT PROPERTY DESCRIBED IN STATE LAND PATENT NO. 5853, AND DESCRIBED HEREIN AS THE SOUTHEAST QUARTER OF THE SOUTHEAST QUARTER OF SAID SECTION; AND EXCEPT THAT PROPERTY DESCRIBED IN STATE LAND PATENT NO. 6199 AND DESCRIBED HEREIN S THE NORTH 723.01 FEET OF THE WEST 723.01 FEET OF SAID SECTION; AND EXCEPT THAT PROPERTY DESCRIBED IN STATE LAND PATENT NO. 5977 AND DESCRIBED HEREIN AS FOLLOWS:

BEGINNING AT THE NORTH QUARTER CORNER OF SAID SECTION; THENCE SOUTH 01 DEGREES 51 MINUTES 30 SECONDS EAST, ALONG THE INTERIOR QUARTER LINE, A DISTANCE OF 1728.95 FEET; THENCE SOUTH 86 DEGREES 03 MINUTES 20 SECONDS WEST, A DISTANCE OF 804.48 FEET TO THE TRUE POINT OF BEGINNING; THENCE SOUTH 03 DEGREES 56 MINUTES 40 SECONDS EAST, A DISTANCE OF 73.82 FEET; THENCE SOUTH 26 DEGREES 11 MINUTES 10 SECONDS EAST, A DISTANCE OF 538.47 FEET; THENCE NORTH 86 DEGREES 03 MINUTES 20 SECONDS EAST, A DISTANCE OF 646.18 FEET; THENCE NORTH 03 DEGREES 56 MINUTES 40 SECONDS WEST 572.23 FEET; THENCE SOUTH 86 DEGREES 03 MINUTES 20 SECONDS WEST, A DISTANCE OF 850.00 FEET TO THE TRUE POINT OF BEGINNING; AND EXCEPT THAT PROPERTY DESCRIBED IN STATE LAND PATENT NO. 6200 AND DESCRIBED HEREIN AS FOLLOWS:

BEGINNING AT THE SOUTH QUARTER CORNER OF SAID SECTION; THENCE NORTH 00 DEGREES 06 MINUTES 57 SECONDS EAST, A DISTANCE OF 1977.07 FEET; THENCE NORTH 89 DEGREES 56 MINUTES 45 SECONDS WEST, A DISTANCE OF 659.34 FEET; THENCE NORTH 00 DEGREES 04 MINUTES 30 SECONDS EAST, A DISTANCE OF 658.91 FEET; THENCE SOUTH 89 DEGREES 57 MINUTES 20 SECONDS EAST, A DISTANCE OF 217.71 FEET; THENCE NORTH 24 DEGREES 12 MINUTES 43 SECONDS WEST, A DISTANCE OF 332.42 FEET; THENCE NORTH 88 DEGREES 01 MINUTES 47 SECONDS EAST, A DISTANCE OF 646.57 FEET; THENCE NORTH 01 DEGREES 58 MINUTES 13 SECONDS WEST, A DISTANCE OF 631.87 FEET; THENCE NORTH 88 DEGREES 08 MINUTES 38 SECONDS EAST, A DISTANCE OF 49.42 FEET; THENCE NORTH 00 DEGREES 10 MINUTES 11 SECONDS WEST, A DISTANCE OF 266.25 FEET; THENCE SOUTH 88 DEGREES 41 MINUTES 43 SECONDS WEST, A DISTANCE OF 515.47 FEET; THENCE NORTH 01 DEGREES 18 MINUTES 17 SECONDS WEST, A DISTANCE OF 275.00 FEET; THENCE NORTH 88 DEGREES 41 MINUTES 43 SECONDS EAST, A DISTANCE OF 540.00 FEET; THENCE SOUTH 01 DEGREES 18 MINUTES 17 SECONDS EAST, A DISTANCE OF 178.60 FEET; THENCE NORTH 88 DEGREES 41 MINUTES 43 SECONDS EAST, A DISTANCE OF 110.35 FEET; THENCE NORTH 01 DEGREES 18 MINUTES 17 SECONDS WEST, A DISTANCE OF 186.96 FEET; THENCE NORTH 89 DEGREES 50 MINUTES 38 SECONDS EAST, A DISTANCE OF 1101.21 FEET; THENCE SOUTH 00 DEGREES 01 MINUTES 44 SECONDS WEST, A DISTANCE OF 857.74 FEET; THENCE NORTH 89 DEGREES 56 MINUTES 39 SECONDS EAST, A DISTANCE OF 1322.49 FEET; THENCE SOUTH 00 DEGREES 03 MINUTES 26 SECONDS EAST, A DISTANCE OF 990.08 FEET; THENCE NORTH 89 DEGREES 56 MINUTES 40 SECONDS WEST, A DISTANCE OF 1323.98 FEET; THENCE SOUTH 00 DEGREES 01 MINUTES 44 SECONDS WEST, A DISTANCE OF 659.53 FEET; THENCE NORTH 89 DEGREES 55 MINUTES 22 SECONDS WEST, A DISTANCE OF 1224.98 FEET; THENCE SOUTH 00 DEGREES 06 MINUTES 57 SECONDS WEST, A DISTANCE OF 1647.65 FEET; THENCE NORTH 89 DEGREES 52 MINUTES 07 SECONDS WEST, A DISTANCE OF 100.00 FEET TO THE POINT OF BEGINNING.

LESSOR'S LEGAL DESCRIPTION (APN: 305-01-004N)

THAT PORTION OF SECTION 14, TOWNSHIP 16 SOUTH, RANGE 15 EAST, GILA AND SALT RIVER BASE AND MERIDIAN, PIMA COUNTY, ARIZONA, MORE PARTICULARLY DESCRIBED AS FOLLOWS:

BEGINNING AT THE SOUTH QUARTER CORNER OF SAID SECTION 14; THENCE NORTH 00 DEGREES 06 MINUTES 57 SECONDS EAST, A DISTANCE OF 1977.07 FEET TO A POINT, SAID POINT BEING THE SOUTHEAST CORNER OF THE NORTHEAST QUARTER OF THE NORTHEAST QUARTER OF THE SOUTHWEST QUARTER OF SAID SECTION 14; THENCE NORTH 89 DEGREES 56 MINUTES 45 SECONDS WEST, A DISTANCE OF 659.34 FEET TO A POINT, SAID POINT BEING THE SOUTHWEST CORNER OF THE NORTHEAST QUARTER OF THE NORTHEAST QUARTER OF THE SOUTHWEST QUARTER OF SECTION 14; THENCE SOUTH 89 DEGREES 57 MINUTES 20 SECONDS EAST, ALONG THE NORTH LINE OF THE NORTHEAST QUARTER OF THE NORTHEAST QUARTER OF THE SOUTHWEST QUARTER OF SAID SECTION 14, A DISTANCE OF 217.71 FEET TO A POINT; THENCE NORTH 24 DEGREES 12 MINUTES 43 SECONDS WEST, A DISTANCE OF 332.42 FEET TO A POINT; THENCE NORTH 68 DEGREES 01 MINUTES 47 SECONDS EAST, A DISTANCE OF 646.57 FEET TO A POINT; THENCE NORTH 01 DEGREES 58 MINUTES 13 SECONDS WEST, A DISTANCE OF 631.87 FEET TO A POINT; THENCE NORTH 66 DEGREES 08 MINUTES 38 SECONDS EAST, A DISTANCE OF 49.42 FEET TO A POINT; THENCE NORTH 00DEGREES 10 MINUTES 11 SECONDS WEST, A DISTANCE OF 266.25 FEET TO A POINT; THENCE SOUTH 88 DEGREES 41 MINUTES 43 SECONDS WEST, A DISTANCE OF 515.47 FEET TO A POINT; THENCE NORTH 01 DEGREES 18 MINUTES 17 SECONDS WEST, A DISTANCE OF 275.00 FEET TO A POINT; THENCE NORTH 88 DEGREES 41 MINUTES 43 SECONDS EAST, A DISTANCE OF 540.00 FEET TO A POINT; THENCE SOUTH 01 DEGREES 18 MINUTES 17 SECONDS EAST, A DISTANCE OF 178.60 FEET TO A POINT; THENCE NORTH 88 DEGREES 41 MINUTES 43 SECONDS EAST, A DISTANCE OF 110.35 FEET TO A POINT; THENCE NORTH 01 DEGREES 18 MINUTES 17 SECONDS WEST, A DISTANCE OF 186.96 FEET TO A POINT; THENCE NORTH 89 DEGREES 50 MINUTES 38 SECONDS EAST, ALONG A LINE 200 FEET NORTH OF AND PARALLEL TO THE SOUTH LINE OF THE NORTH HALF OF THE NORTHEAST QUARTER OF SAID SECTION 14, A DISTANCE OF 1101.21 FEET TO A POINT ON THE EAST LINE OF THE NORTHWEST QUARTER OF THE NORTHEAST QUARTER OF SAID SECTION 14; THENCE SOUTH 0 DEGREES 01 MINUTES 44 SECONDS WEST, A DISTANCE OF 857.74 FEET TO A POINT, SAID POINT BEING THE SOUTHWEST CORNER OF THE NORTHEAST QUARTER OF THE SOUTHWEST QUARTER OF THE NORTHEAST QUARTER OF SAID SECTION 14; THENCE NORTH 89 DEGREES 56 MINUTES 32 SECONDS EAST, A DISTANCE OF 1322.49 FEET TO A POINT, SAID POINT BEING THE NORTHEAST CORNER OF THE SOUTHEAST QUARTER OF THE SOUTHEAST QUARTER OF THE NORTHEAST QUARTER OF SAID SECTION 14; THENCE SOUTH 0 DEGREES 03 MINUTES 26 SECONDS EAST, A DISTANCE OF 660.06 FEET TO A POINT, SAID POINT BEGIN THE EAST QUARTER CORNER OF SAID SECTION 14; THENCE SOUTH 0 DEGREES 03 MINUTES 26 SECONDS EAST, A DISTANCE OF 330.02 FEET TO A POINT, SAID POINT BEING THE SOUTHEAST CORNER OF THE NORTHEAST QUARTER OF THE NORTHEAST QUARTER OF THE NORTHEAST QUARTER OF THE SOUTHEAST QUARTER OF SAID SECTION 14; THENCE NORTH 89 DEGREES 56 MINUTES 40 SECONDS WEST, A DISTANCE OF 1323.98 FEET TO A POINT, SAID POINT BEING THE SOUTHWEST CORNER OF THE NORTHWEST QUARTER OF THE NORTHWEST QUARTER OF THE NORTHEAST QUARTER OF THE SOUTHEAST QUARTER OF SAID SECTION 14; THENCE SOUTH 0 DEGREES 0 MINUTES 44 SECONDS WEST, A DISTANCE OF 659.53 FEET TO A POINT, SAID POINT BEING THE SOUTHEAST CORNER OF THE NORTHEAST QUARTER OF THE SOUTHEAST QUARTER OF THE NORTHWEST QUARTER OF THE SOUTHEAST QUARTER OF SAID SECTION 14; THENCE NORTH 89 DEGREES 55 MINUTES 22 SECONDS WEST, ALONG THE SOUTH LINE OF THE NORTH HALF OF THE SOUTH HALF OF THE NORTHWEST QUARTER OF THE SOUTHEAST QUARTER OF SAID SECTION 14, A DISTANCE OF 1224.98 FEET TO A POINT; THENCE SOUTH 0 DEGREES 36 MINUTES 57 SECONDS WEST, A DISTANCE OF 1647.65 FEET TO A POINT ON THE SOUTH LINE OF SAID SECTION 14; THENCE NORTH 85 DEGREES 52 MINUTES 07 SECONDS WEST, A DISTANCE OF 100.00 FEET TO THE POINT OF BEGINNING.

EXCEPT THOSE PORTIONS OF SAID PARCELS WITHIN THE RIGHTS-OF-WAY OF BREKKE ROAD, HOUGHTON ROAD, DOWN ROAD AND HARRISON ROAD, BEING THE NORTH 75 FEET, THE EAST 75 FEET, THE SOUTH 75 FEET AND THE WEST 75 FEET, RESPECTIVELY, OF SAID SECTION.

SCHEDULE B EXCEPTIONS (APN: 305-01-004K)

7. EASEMENT(S) FOR THE PURPOSE(S) SHOWN BELOW AND RIGHTS INCIDENTAL THERETO AS SET FORTH IN A DOCUMENT
PURPOSE: GAS PIPELINE AND APPURTENANCES
RECORDING DATE: JULY 25, 1951
RECORDING NO: DOCKET 370, PAGE 46
THEREAFTER ENVIRONMENTAL LIABILITY ASSUMPTION AND RELEASE
RECORDING DATE: FEBRUARY 20, 2013
RECORDING NO: 2013-0510074

8. AN UNRECORDED LEASE WITH CERTAIN TERMS, COVENANTS, CONDITIONS AND PROVISIONS SET FORTH THEREIN AS DISCLOSED BY THE DOCUMENT
ENTITLED: DEED
LESSOR: STATE OF ARIZONA LAND DEPARTMENT GRAZING LEASE NO. 84
LESSEE: SEE DOCUMENT
RECORDING DATE: JUNE 26, 1959
(BLANKET IN NATURE)

9. AN UNRECORDED LEASE WITH CERTAIN TERMS, COVENANTS, CONDITIONS AND PROVISIONS SET FORTH THEREIN AS DISCLOSED BY THE DOCUMENT
ENTITLED: DEED
LESSOR: STATE OF ARIZONA LAND DEPARTMENT GRAZING LEASE NO. 84
LESSEE: SEE DOCUMENT
RECORDING DATE: JUNE 26, 1959
RECORDING NO: DOCKET 1451, PAGE 266
(BLANKET IN NATURE)

12. EASEMENT(S) FOR THE PURPOSE(S) SHOWN BELOW AND RIGHTS INCIDENTAL THERETO AS SET FORTH IN A DOCUMENT:
PURPOSE: NATURAL GAS LINES
RECORDING DATE: MARCH 17, 1966
RECORDING NO: DOCKET 2703, PAGE 227
(BLANKET IN NATURE)

13. EASEMENT(S) FOR THE PURPOSE(S) SHOWN BELOW AND RIGHTS INCIDENTAL THERETO AS SET FORTH IN A DOCUMENT:
PURPOSE: ELECTRIC AND NATURAL GAS DISTRIBUTION LINES
RECORDING DATE: NOVEMBER 28, 1966
RECORDING NO: DOCKET 2878, PAGE 498
(BLANKET IN NATURE)

15. EASEMENT(S) FOR THE PURPOSE(S) SHOWN BELOW AND RIGHTS INCIDENTAL THERETO AS SET FORTH IN A DOCUMENT:
PURPOSE: ELECTRIC AND NATURAL GAS DISTRIBUTION LINES
RECORDING DATE: NOVEMBER 20, 1967
RECORDING NO: DOCKET 3124, PAGE 72

16. MATTERS SHOWN ON RECORD OF SURVEY:
RECORDING NO.: BOOK 12 OF ROAD MAPS, PAGE 71 (DAWN ROAD)

18. A RESOLUTION IN FAVOR OF THE BOARD OF SUPERVISORS OF PIMA COUNTY, ARIZONA
FOR: ESTABLISHMENT OF HARRISON ROAD
RECORDING DATE: DECEMBER 27, 1973
RECORDING NO: DOCKET 4670, PAGE 784

19. A RESOLUTION IN FAVOR OF THE BOARD OF SUPERVISORS OF PIMA COUNTY, ARIZONA
FOR: ESTABLISHMENT OF BREKKE ROAD
RECORDING DATE: DECEMBER 27, 1973
RECORDING NO: DOCKET 4670, PAGE 785

22. EASEMENT(S) FOR THE PURPOSE(S) SHOWN BELOW AND RIGHTS INCIDENTAL THERETO AS SET FORTH IN A DOCUMENT:
PURPOSE: UNDERGROUND ELECTRIC LINES AND APPURTENANT FACILITIES
RECORDING DATE: APRIL 22, 1976
RECORDING NO: DOCKET 5254, PAGE 48

23. AN UNRECORDED SBULEASE WITH CERTAIN TERMS, COVENANTS, CONDITIONS AND PROVISIONS SET FORTH THEREIN AS DISCLOSED BY THE DOCUMENT
ENTITLED: MODIFICATION OF EXISTING LEASE
SUBLESSOR: SOUTHERN ARIZONA INTERNATIONAL LIVESTOCK ASSOCIATION
SUBLESSEE: TUCSON AUTO CYCLE RACING ASSOCIATION, INC., AN ARIZONA CORPORATION
(BLANKET IN NATURE)

24. EASEMENT(S) FOR THE PURPOSE(S) SHOWN BELOW AND RIGHTS INCIDENTAL THERETO AS SET FORTH IN A DOCUMENT:
PURPOSE: ELECTRIC TRANSMISSION OR DISTRIBUTION LINE OR SYSTEM
RECORDING DATE: NOVEMBER 12, 1976
RECORDING NO: DOCKET 5398, PAGE 299

25. EASEMENT(S) FOR THE PURPOSE(S) SHOWN BELOW AND RIGHTS INCIDENTAL THERETO AS SET FORTH IN A DOCUMENT:
PURPOSE: GAS DISTRIBUTION LINE OR SYSTEM
RECORDING DATE: NOVEMBER 12, 1976
RECORDING NO: DOCKET 5398, PAGE 301

26. EASEMENT(S) FOR THE PURPOSE(S) SHOWN BELOW AND RIGHTS INCIDENTAL THERETO AS SET FORTH IN A DOCUMENT:
PURPOSE: COMMUNICATION AND OTHER FACILITIES
RECORDING DATE: APRIL 05, 1977
RECORDING NO: DOCKET 5497, PAGE 774

27. EASEMENT(S) FOR THE PURPOSE(S) SHOWN BELOW AND RIGHTS INCIDENTAL THERETO AS SET FORTH IN A DOCUMENT:
PURPOSE: UNDERGROUND ELECTRIC LINES AND APPURTENANT FACILITIES
RECORDING DATE: JANUARY 27, 1978
RECORDING NO: DOCKET 5702, PAGE 890

28. EASEMENT(S) FOR THE PURPOSE(S) SHOWN BELOW AND RIGHTS INCIDENTAL THERETO AS SET FORTH IN A DOCUMENT:
PURPOSE: UNDERGROUND ELECTRIC LINES AND APPURTENANT FACILITIES
RECORDING DATE: MARCH 29, 1978
RECORDING NO. DOCKET 5743, PAGE 866

29. AN UNRECORDED LEASE WITH CERTAIN TERMS, COVENANTS, CONDITIONS AND PROVISIONS SET FORTH THEREIN AS DISCLOSED BY THE DOCUMENT
ENTITLED: NON-COMPETITIVE OIL AND GAS LEASE
LESSOR: STATE OF ARIZONA, ACTING THROUGH THE STATE LAND DEPARTMENT
LESSEE: THE ANSCHUTZ CORPORATION
RECORDING DATE: APRIL 18, 1978
RECORDING NO: DOCKET 5757, PAGE 928
(BLANKET IN NATURE)

31. EASEMENT(S) FOR THE PURPOSE(S) SHOWN BELOW AND RIGHTS INCIDENTAL THERETO AS SET FORTH IN A DOCUMENT:
PURPOSE: UNDERGROUND ELECTRIC LINES AND APPURTENANT FACILITIES
RECORDING DATE: MARCH 23, 1981
RECORDING NO: DOCKET 6492, PAGE 810
(INSUFFICIENT DATA; UNABLE TO PLOT)

32. EASEMENT(S) FOR THE PURPOSE(S) SHOWN BELOW AND RIGHTS INCIDENTAL THERETO AS SET FORTH IN A DOCUMENT:
PURPOSE: UNDERGROUND ELECTRIC LINES AND APPURTENANT FACILITIES
RECORDING DATE: AUGUST 25, 1981
RECORDING NO: DOCKET 6601, PAGE 476

33. EASEMENT(S) FOR THE PURPOSE(S) SHOWN BELOW AND RIGHTS INCIDENTAL THERETO AS SET FORTH IN A DOCUMENT:
PURPOSE: ELECTRIC LINES AND APPURTENANT FACILITIES
RECORDING DATE: MARCH 29, 1991
RECORDING NO: DOCKET 9006, PAGE 864

34. EASEMENT(S) FOR THE PURPOSE(S) SHOWN BELOW AND RIGHTS INCIDENTAL THERETO AS SET FORTH IN A DOCUMENT:
PURPOSE: ELECTRICAL UTILITIES AND OTHER FACILITIES
RECORDING DATE: MAY 11, 1993
RECORDING NO: DOCKET 9539, PAGE 786

35. EASEMENT(S) FOR THE PURPOSE(S) SHOWN BELOW AND RIGHTS INCIDENTAL THERETO AS SET FORTH IN A DOCUMENT:
PURPOSE: CONSTRUCTION OPERATION AND MAINTENANCE OF A HIGHWAY
RECORDING DATE: MARCH 03, 1995
RECORDING NO: DOCKET 9992, PAGE 2387
(BLANKET IN NATURE)

36. EASEMENT(S) FOR THE PURPOSE(S) SHOWN BELOW AND RIGHTS INCIDENTAL THERETO AS SET FORTH IN A DOCUMENT:
PURPOSE: ELECTRIC LINES AND APPURTENANT FACILITIES
RECORDING DATE: JUNE 08, 2000
RECORDING NO: DOCKET 11315, PAGE 2683

39. EASEMENT(S) FOR THE PURPOSE(S) SHOWN BELOW AND RIGHTS INCIDENTAL THERETO AS SET FORTH IN A DOCUMENT:

PURPOSE: ELECTRIC LINES AND APPURTENANT FACILITIES
RECORDING DATE: DECEMBER 03, 2012
RECORDING NO: 2012-3380178
NOTE: THIS CONDITION OF TITLE REPORT DOES NOT ADDRESS GENERAL INDEX MATTERS (SUCH AS PROCEEDINGS, LIENS, OR DECREES), WHICH DO NOT SPECIFICALLY DESCRIBE SAID LAND.
NOTE: THIS REPORT IS FOR INFORMATIONAL PURPOSES ONLY AND IS NOT TO BE CONSIDERED A COMMITMENT TO ISSUE ANY FORM OF TITLE INSURANCE. IT IS FOR THE USE ONLY OF THE PARTY WHO ORDERED IT AND LIABILITY, IF ANY, IS LIMITED TO THE AMOUNT OF THE FEE PAID RECEIPT AND USE OF THIS REPORT SHALL BE EVIDENCE OF THE ACCEPTANCE OF THE TERMS HEREOF.
TAX NOTE:

YEAR: 2014
TAX PARCEL NO: 305-01-004K
TOTAL TAX: EXEMPT

ITEMS 1 THRU 6, 8 THRU 14, 17, 20, 21, 23, 29 THRU 31, 35, 37 & 38 OF THE CLIENT PROVIDED TITLE REPORT DO NOT CONTAIN GRAPHICALLY PLOTTABLE EASEMENTS, SETBACKS, RESTRICTIONS OR OTHER ENCUMBRANCES. THE SURVEYOR CANNOT GUARANTEE THAT NON-PLOTTABLE ENCUMBRANCES DO NOT EXIST THAT MAY AFFECT THE SUBJECT LEASED PREMISES.

SCHEDULE B EXCEPTIONS (APN: 305-01-004N)

2. EASEMENT(S) FOR THE PURPOSE(S) SHOWN BELOW AND RIGHTS INCIDENTAL THERETO AS SET FORTH IN A DOCUMENT:
PURPOSE: UTILITIES
RECORDING NO: DOCKET 2703, PAGE 227
(BLANKET IN NATURE)

3. EASEMENT(S) FOR THE PURPOSE(S) SHOWN BELOW AND RIGHTS INCIDENTAL THERETO AS SET FORTH IN A DOCUMENT:
PURPOSE: UTILITIES
RECORDING NO: DOCKET 2878, PAGE 498
(BLANKET IN NATURE)

7. EASEMENT(S) FOR THE PURPOSE(S) SHOWN BELOW AND RIGHTS INCIDENTAL THERETO AS SET FORTH IN A DOCUMENT:
PURPOSE: RIGHT OF WAY FOR ELECTRIC TRANSMISSION AND DISTRIBUTION LINES
RECORDING NO: DOCKET 5398, PAGE 299

8. EASEMENT(S) FOR THE PURPOSE(S) SHOWN BELOW AND RIGHTS INCIDENTAL THERETO AS SET FORTH IN A DOCUMENT:
PURPOSE: GAS DISTRIBUTION LINE
RECORDING NO: DOCKET 5398, PAGE 301

9. EASEMENT(S) FOR THE PURPOSE(S) SHOWN BELOW AND RIGHTS INCIDENTAL THERETO AS SET FORTH IN A DOCUMENT:
PURPOSE: RIGHT OF WAY FOR TRANSMISSION AND DISTRIBUTION OF ELECTRICITY
RECORDING NO: DOCKET 6492, PAGE 810
(BLANKET IN NATURE)

11. EASEMENT(S) FOR THE PURPOSE(S) SHOWN BELOW AND RIGHTS INCIDENTAL THERETO AS SET FORTH IN A DOCUMENT:
PURPOSE: UNDERGROUND ELECTRIC
RECORDING NO: DOCKET 6720, PAGE 497

ITEMS 1 THRU 6, 9, 10, 12 AND 13 OF THE CLIENT PROVIDED TITLE REPORT DO NOT CONTAIN GRAPHICALLY PLOTTABLE EASEMENTS, SETBACKS, RESTRICTIONS OR OTHER ENCUMBRANCES. THE SURVEYOR CANNOT GUARANTEE THAT NON-PLOTTABLE ENCUMBRANCES DO NOT EXIST THAT MAY AFFECT THE SUBJECT LEASED PREMISES.

LESSEE 12' ACCESS/UTILITY EASEMENT LEGAL DESCRIPTION

A 12.00 FOOT WIDE STRIP OF LAND BEING A PORTION OF THE NORTH HALF OF SECTION 14, TOWNSHIP 16 SOUTH, RANGE 15 EAST, OF THE GILA AND SALT RIVER BASE AND MERIDIAN, PIMA COUNTY, ARIZONA, LYING 6.00 FEET ON EACH SIDE OF THE FOLLOWING DESCRIBED CENTERLINE:

COMMENCING AT THE NORTH WEST CORNER OF SAID SECTION FROM WHICH THE SOUTH WEST CORNER BEARS SOUTH 00° 23' 14" EAST 5269.82 FEET; THENCE ALONG THE NORTH LINE OF SAID SECTION SOUTH 89° 38' 28" WEST 2642.09 FEET; THENCE SOUTH 00°24'34" EAST, 75.00 FEET TO THE SOUTHERLY RIGHT OF WAY LINE OF BREKKE ROAD; THENCE DEPARTING SAID LINE NORTH 89°38'28" EAST, 42.20 FEET TO THE POINT OF BEGINNING;

THENCE SOUTH 01°09'22" EAST, 1062.96 FEET; THENCE SOUTH 88°50'38" WEST, 196.66 FEET; THENCE SOUTH 87°31'06" WEST, 148.28 FEET; THENCE SOUTH 88°50'38" WEST, 34.93 FEET TO THE POINT OF TERMINUS.

ALL SIDELINES SHALL BE LENGTHENED OR SHORTENED TO FORM ONE CONTIGUOUS PARCEL.

LESSEE LEASE AREA LEGAL DESCRIPTION

A PORTION OF THE NORTH WEST QUARTER SECTION 14, TOWNSHIP 16 SOUTH, RANGE 15 EAST, OF THE GILA AND SALT RIVER BASE AND MERIDIAN, PIMA COUNTY, ARIZONA, DESCRIBED AS FOLLOWS:

COMMENCING AT THE NORTH WEST CORNER OF SAID SECTION FROM WHICH THE SOUTH WEST CORNER BEARS SOUTH 00° 23' 14" EAST 5269.82 FEET; THENCE ALONG THE NORTH LINE OF SAID SECTION SOUTH 89° 38' 28" WEST 5284.17 FEET; THENCE SOUTH 00°24'34" EAST, 75.00 FEET TO THE SOUTHERLY RIGHT OF WAY LINE OF BREKKE ROAD; THENCE DEPARTING SAID LINE NORTH 89°38'28" EAST, 42.20 FEET; THENCE SOUTH 01°09'22" EAST, 1062.96 FEET; THENCE SOUTH 88°50'38" WEST, 196.66 FEET; THENCE SOUTH 87°31'06" WEST, 148.28 FEET; THENCE SOUTH 88°50'38" WEST, 34.93 FEET; THENCE SOUTH 01°09'22" EAST, 6.00 FEET TO THE POINT OF BEGINNING;

THENCE SOUTH 01°09'22" EAST, 25.00 FEET; THENCE NORTH 88°50'38" EAST, 35.00 FEET; THENCE NORTH 01°09'22" WEST, 25.00 FEET; THENCE SOUTH 88°50'38" WEST, 35.00 FEET TO THE POINT OF BEGINNING.

verizon
126 W. GEMINI DR.
TEMPE, AZ 85283

P+S Consulting
Always here when you need us

FIELD BY:	JTS
DRAWN BY:	JTJ
CHECKED BY:	RLF

REVISIONS

NO.	DATE	DESCRIPTION
4	01/04/16	REVISION-JTJ
3	12/07/15	FINAL-JTJ
2	11/30/15	REVISION-JTJ
1	10/27/15	PRELIMINARY

RLF CONSULTING
LAND SURVEY • MAPPING SOLUTIONS
WWW.RLFCONSULTING.COM

REUSE OF DOCUMENT
THE IDEAS & DESIGN INCORPORATED HEREON, AS AN INSTRUMENT OF PROFESSIONAL SERVICE, IS THE PROPERTY OF RLF CONSULTING, LLC & IS NOT TO BE USED FOR ANY OTHER PROJECT WITHOUT WRITTEN AUTHORIZATION OF RLF CONSULTING, LLC.

PROJECT No.
14003009

SITE NAME:
TUC QUARTER MILE

SITE ADDRESS:
11300 S. HOUGHTON RD.
TUCSON AZ, 85747

SHEET TITLE:
LEGAL

SHEET NO.	REVISION:
LS-3	3

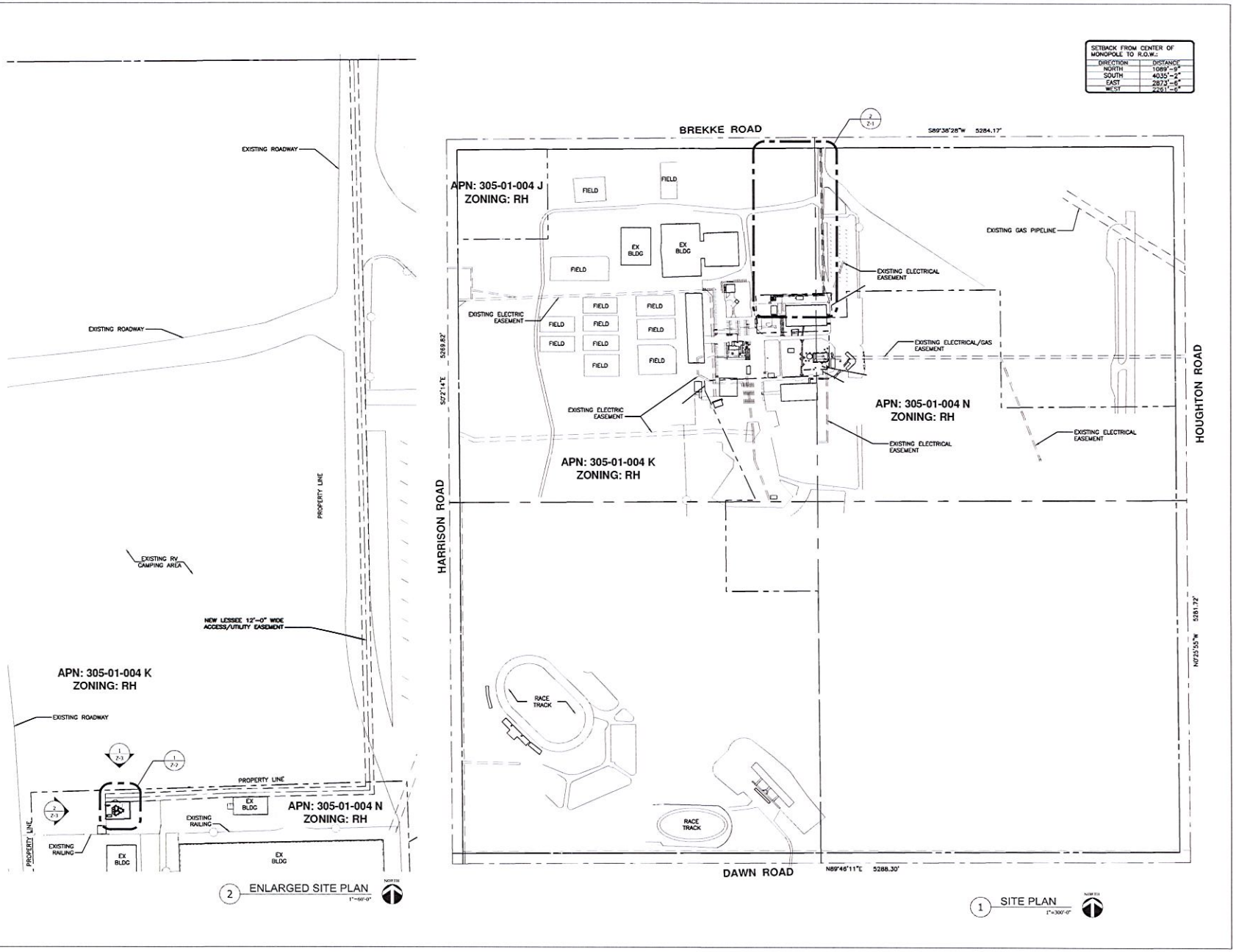

verizon wireless
126 W. GEMINI DR. TEMPE, AZ 85283
PHONE: (480) 777-4360
FAX: (480) 777-4391

P+S Consulting
Always here when you need us

PROPRIETARY INFORMATION
THE INFORMATION CONTAINED IN THIS SET OF DRAWINGS IS PROPRIETARY BY NATURE. ANY USE OR DISCLOSURE OTHER THAN THAT WHICH RELATES TO THIS PROJECT IS STRICTLY PROHIBITED WITHOUT THE WRITTEN CONSENT OF P+S CONSULTING LLC

DRAWN BY:	CHK:	APV:
SP	SCP	SCP

SITE NAME & ADDRESS:
TUC QUARTER MILE
11300 S HOUGHTON RD
TUCSON, AZ 85747

ISSUE STATUS:

	DATE:	DESCRIPTION:
A	12/04/15	ISSUE FOR CLIENT REVIEW
0	01/11/16	ISSUE FOR ZONING SUBMITTAL

SHEET TITLE:
SITE PLAN

SHEET NUMBER:
Z-1

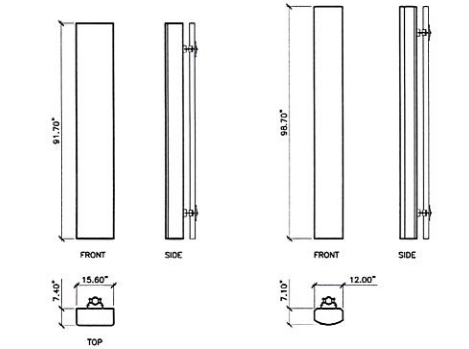

4 NEW ANTENNA DETAIL 1/2"=1'-0"

3 NEW ANTENNA DETAIL 1/2"=1'-0"

(2) NEW HYBRIFLEX CABLES
(1) NEW RET CABLE

NOTE - PALM FRONDS ARE NOT SHOWN FOR CLARITY

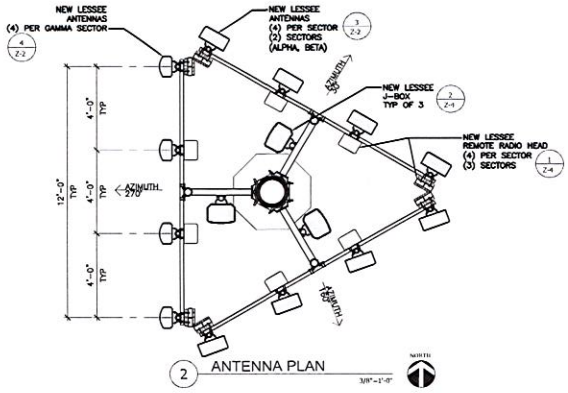

2 ANTENNA PLAN 3/8"=1'-0" NORTH

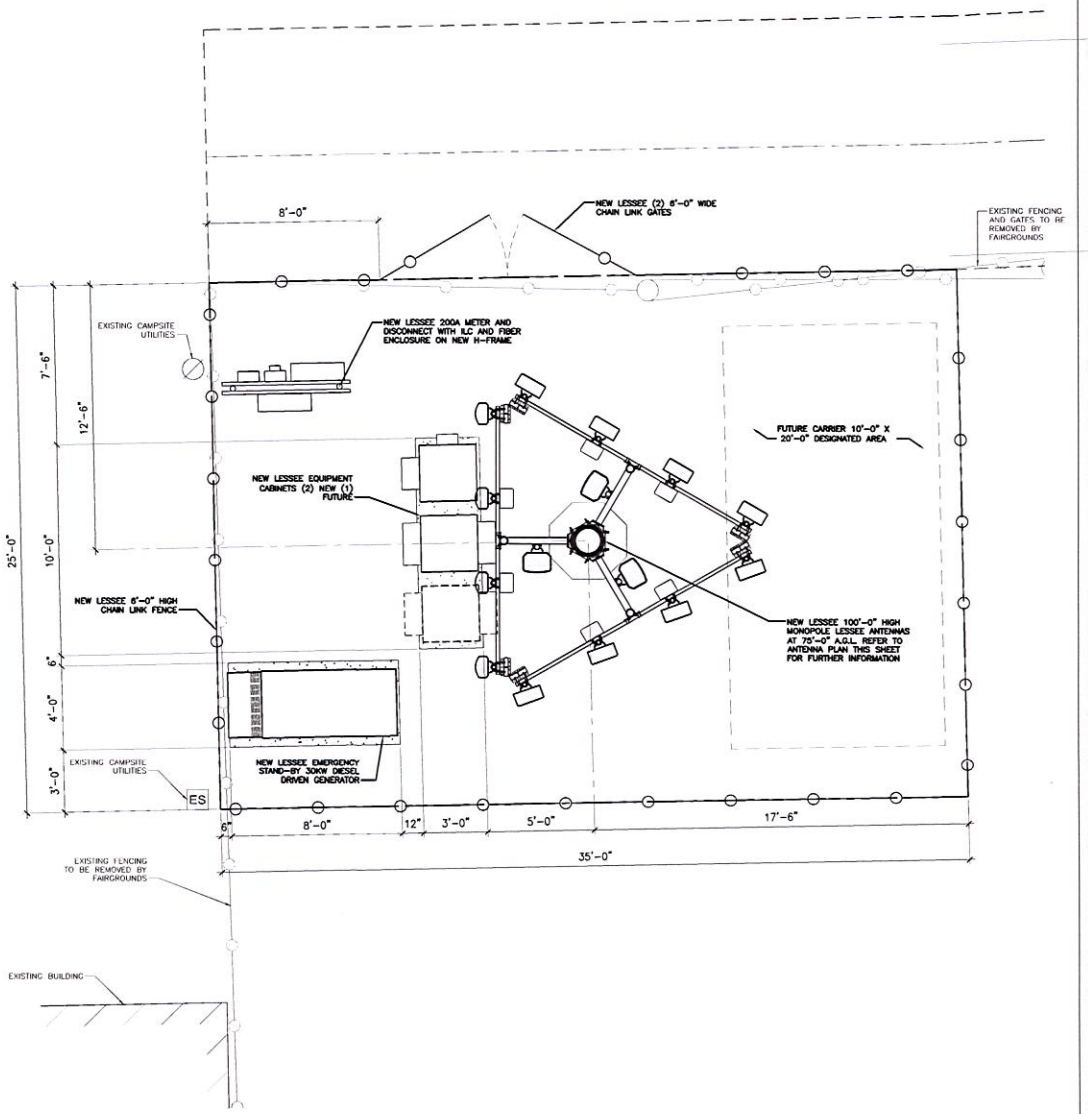

1 SITE PLAN 3/8"=1'-0" NORTH

verizon wireless
126 W. GEMINI DR. TEMPE, AZ 85283
PHONE: (480) 777-4360
FAX: (480) 777-4391

P+S Consulting
Always here when you need us

PROPRIETARY INFORMATION
THE INFORMATION CONTAINED IN THIS SET OF DRAWINGS IS PROPRIETARY BY NATURE. ANY USE OR DISCLOSURE OTHER THAN THAT WHICH RELATES TO THIS PROJECT IS STRICTLY PROHIBITED WITHOUT THE WRITTEN CONSENT OF P+S CONSULTING LLC

DRAWN BY:	CHK:	APV:
SP	SCP	SCP

SITE NAME & ADDRESS:
TUC QUARTER MILE
11300 S HOUGHTON RD
TUCSON, AZ 85747

ISSUE STATUS:

	DATE:	DESCRIPTION:
A	12/04/15	ISSUE FOR CLIENT REVIEW
0	01/11/16	ISSUE FOR ZONING SUBMITTAL

SHEET TITLE:
ENLARGED SITE PLAN & ANTENNA INFORMATION

SHEET NUMBER:
Z-2

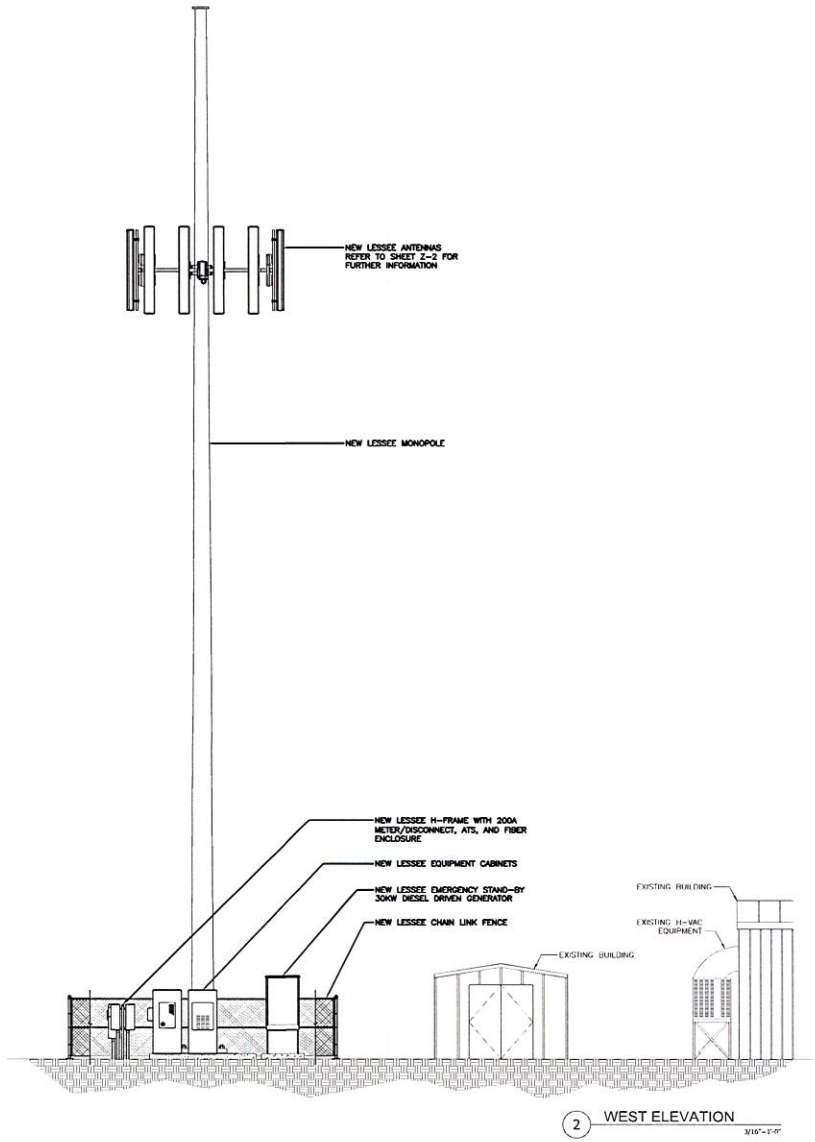

2 WEST ELEVATION

3/16"=1'-0"

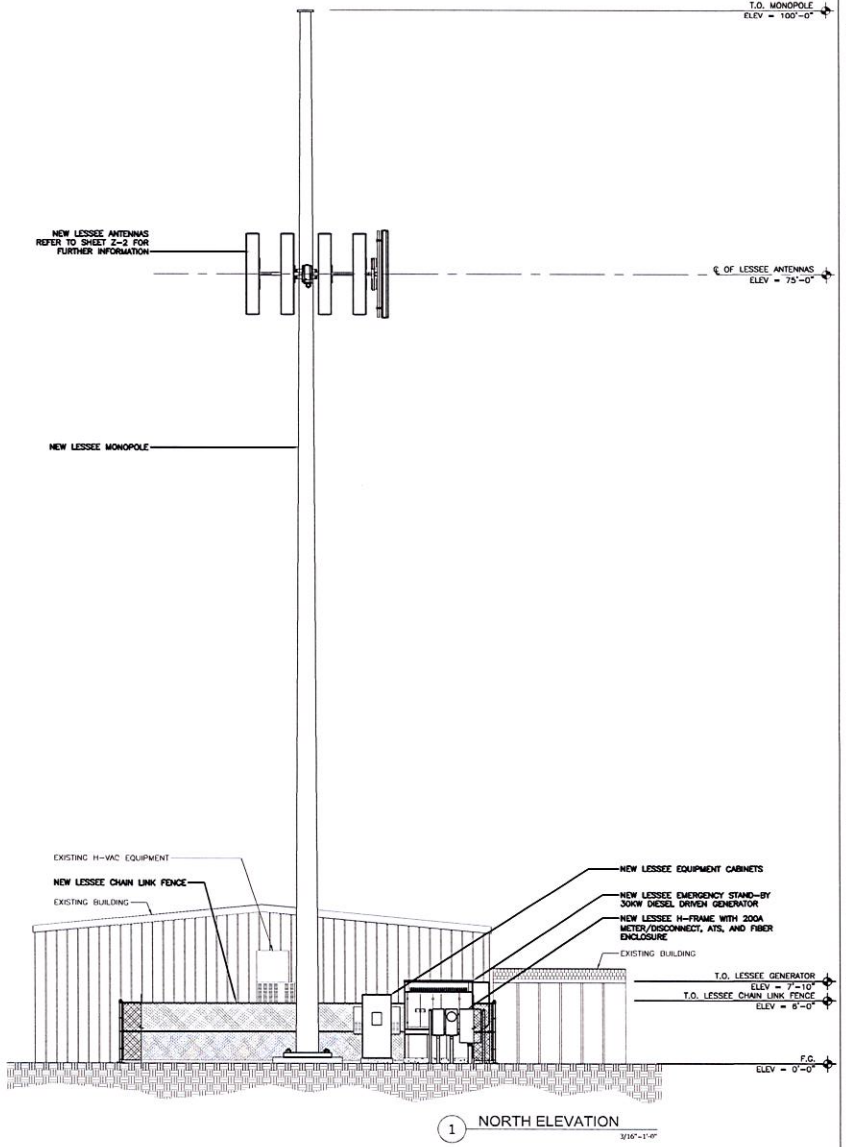

1 NORTH ELEVATION

3/16"=1'-0"

verizon wireless
126 W. GEMINI DR. TEMPE, AZ 85283
PHONE: (480) 777-4360
FAX: (480) 777-4391

P+S Consulting
Always here when you need us

PROPRIETARY INFORMATION
THE INFORMATION CONTAINED IN THIS SET OF DRAWINGS IS PROPRIETARY BY NATURE. ANY USE OR DISCLOSURE OTHER THAN THAT WHICH RELATES TO THIS PROJECT IS STRICTLY PROHIBITED WITHOUT THE WRITTEN CONSENT OF P+S CONSULTING LLC

DRAWN BY:	CHK:	APV:
SP	SCP	SCP

SITE NAME & ADDRESS:

TUC QUARTER MILE

11300 S HOUGHTON RD
TUCSON, AZ 85747

ISSUE STATUS:

△	DATE:	DESCRIPTION:
A	12/04/15	ISSUE FOR CLIENT REVIEW
0	01/11/16	ISSUE FOR ZONING SUBMITTAL

SHEET TITLE:

ELEVATIONS

SHEET NUMBER:

Z-3

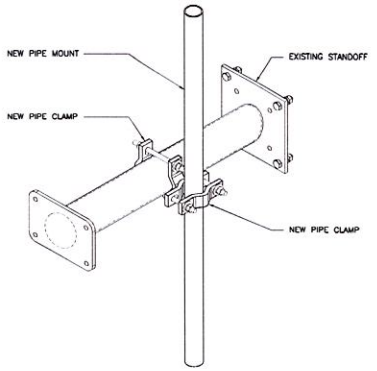

4 J-BOX MOUNTING
NTS

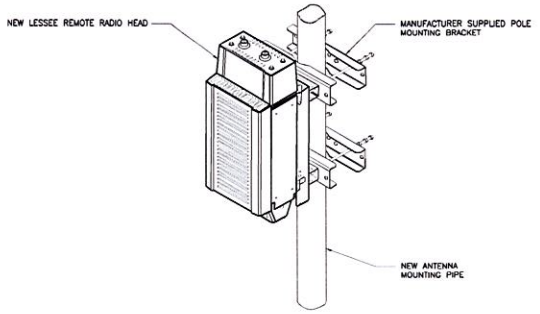

3 RRH MOUNTING
NTS

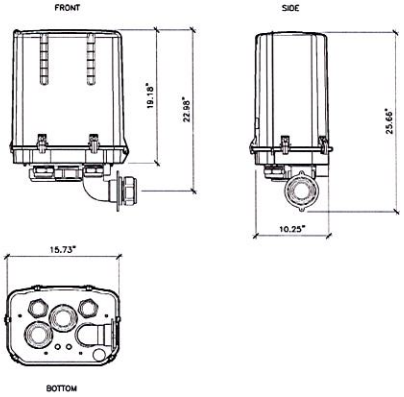

2 NEW J-BOX
NTS

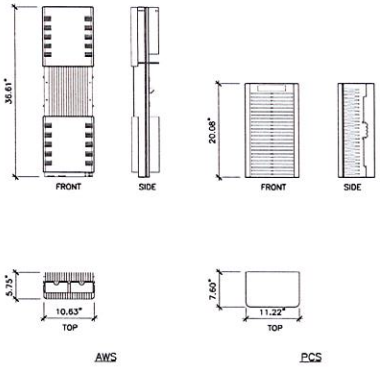

1 NEW REMOTE RADIO HEAD(S)
NTS

verizon wireless
126 W. GEMINI DR. TEMPE, AZ 85283
PHONE: (480) 777-4360
FAX: (480) 777-4391

P+S Consulting
Always here when you need us

PROPRIETARY INFORMATION
THE INFORMATION CONTAINED IN THIS SET OF DRAWINGS IS PROPRIETARY BY NATURE. ANY USE OR DISCLOSURE OTHER THAN THAT WHICH RELATES TO THIS PROJECT IS STRICTLY PROHIBITED WITHOUT THE WRITTEN CONSENT OF P+S CONSULTING LLC

DRAWN BY:	CHK:	APV:
SP	SCP	SCP

SITE NAME & ADDRESS:
TUC QUARTER MILE
11300 S HOUGHTON RD
TUCSON, AZ 85747

ISSUE STATUS:

	DATE:	DESCRIPTION:
A	12/04/15	ISSUE FOR CLIENT REVIEW
0	01/11/16	ISSUE FOR ZONING SUBMITTAL

SHEET TITLE:
GENERAL EQUIPMENT INFORMATION

SHEET NUMBER:
Z-4

PHOTO SIMULATIONS

Photo Map:

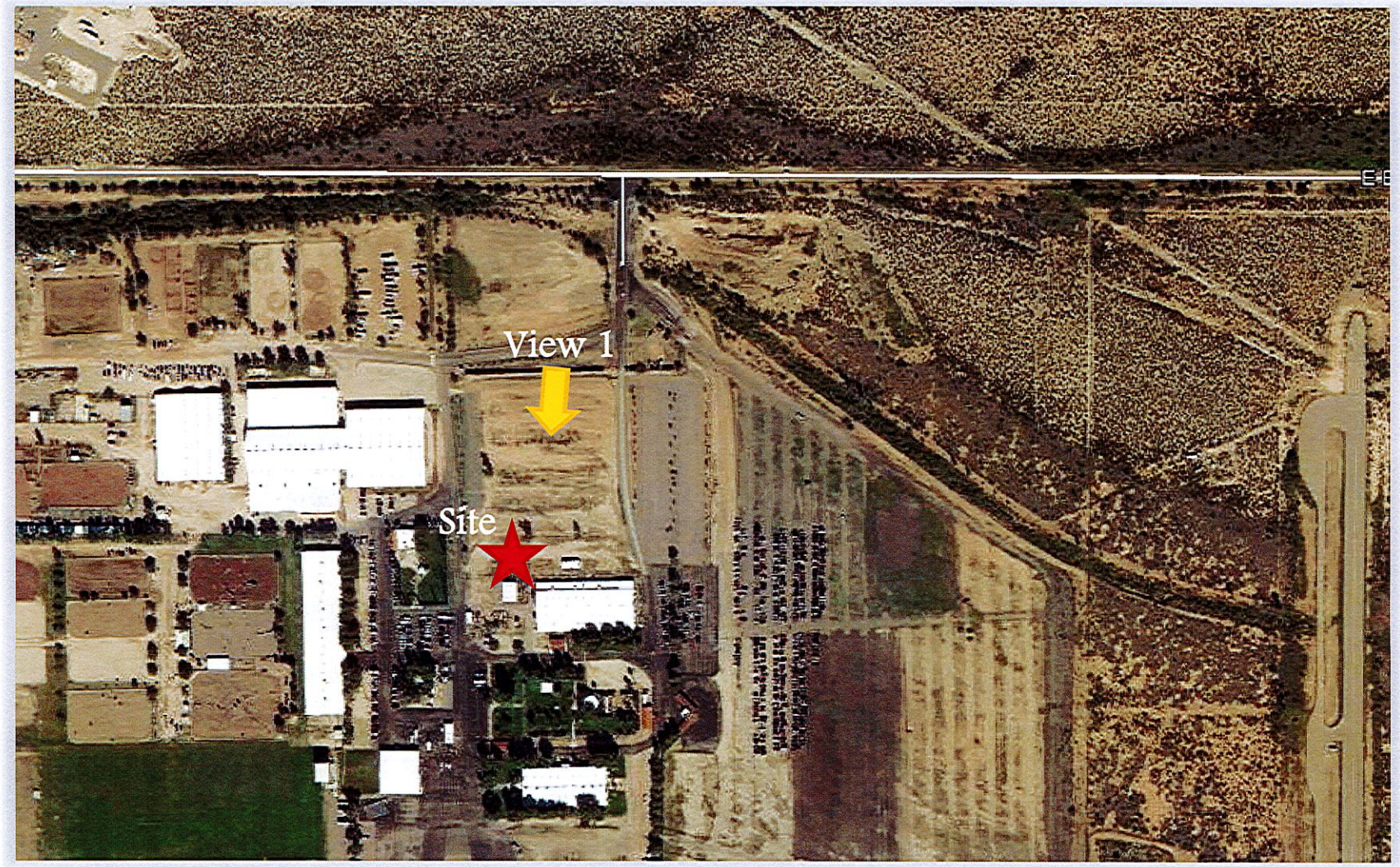

verizonwireless

P+S Consulting

TUC QUARTER MILE
11300 South Houghton Road
Tucson, AZ 85747

Note: Photo Simulations are an artistic illustration created to represent how the proposed project may look once constructed. Simulations are created to match the current design as accurately as possible, but are not guaranteed to match the final build.

PHOTO SIMULATIONS

View 1 – Before:

verizonwireless

P+S Consulting

TUC QUARTER MILE
11300 South Houghton Road
Tucson, AZ 85747

View: Looking South to Proposed Site
Date Completed: 3/8/2016
Completed By: Christopher Bridges

PHOTO SIMULATIONS

View 1 – After:

verizonwireless

P+S Consulting

TUC QUARTER MILE
11300 South Houghton Road
Tucson, AZ 85747

View: Looking South to Proposed Site
Date Completed: 3/8/2016
Completed By: Christopher Bridges

E Brekke Rd
TEP Power Pole on State Land
Musselman Honda Light Pole
Power Line Utility Rd
E Dawn Rd
TEP Power Pole on Pima County Land
S Houghton Rd
© 2016 Google

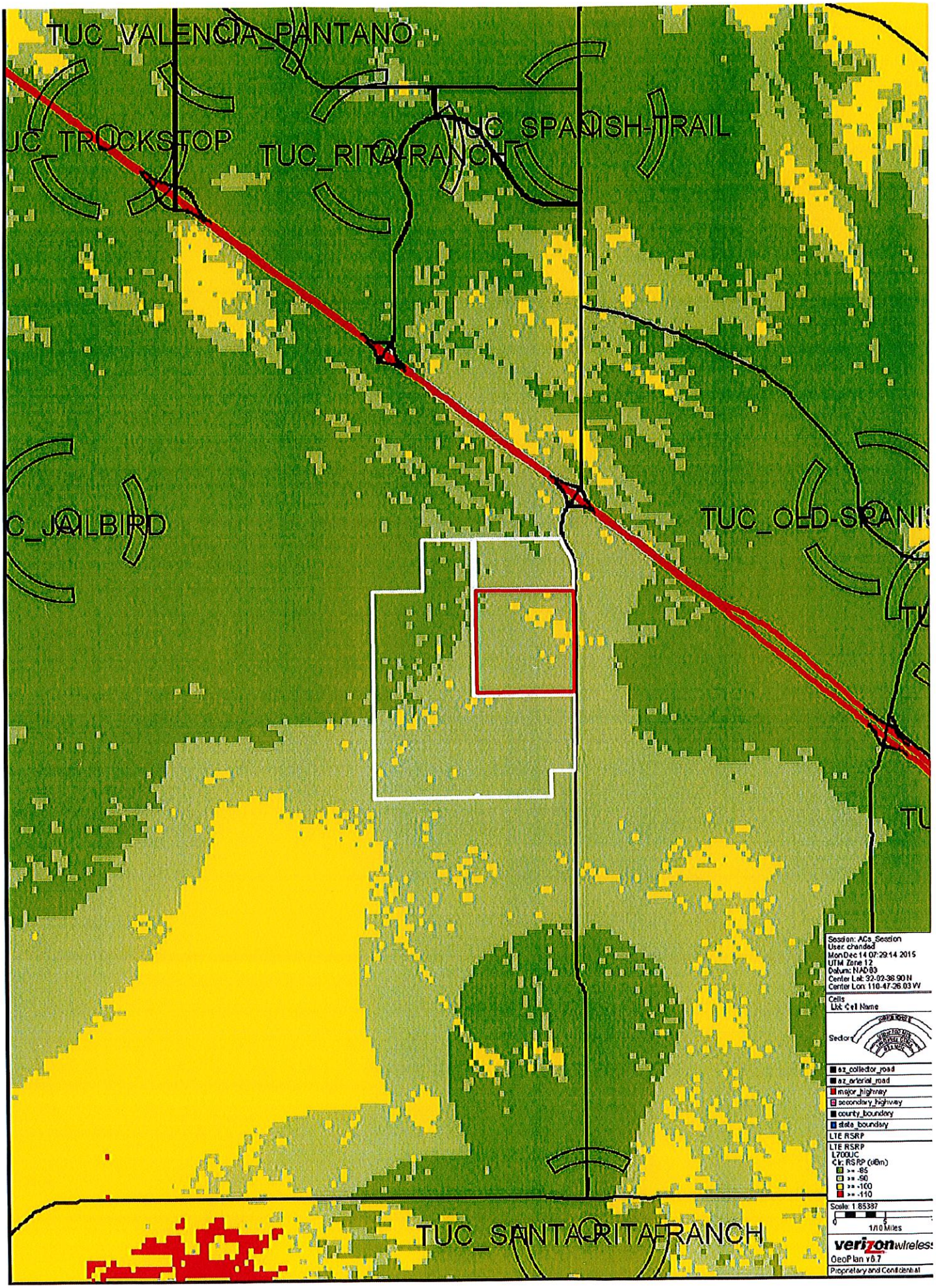
TUC_VALENCIA_PANTANO
TUC_SPANISH-TRAIL
TUC_RITA-RANCH
TUC_OLD-SPANI
TUC_SANTA-RITA-RANCH
Session: ACs_Session
User: chandad
Mon Dec 14 07:29:14 2015
UTM Zone 12
Datum: NAD83
Center Lat: 32-02-38.90 N
Center Lon: 110-47-26.03 W
Cells
List Cell Name
Sectors
az_collector_road
az_arterial_road
major_highway
secondary_highway
county_boundary
state_boundary
LTE RSRP
LTE RSRP
L700UC
Clr: RSRP (dBm)
>= -85
>= -90
>= -100
>= -110
Scale: 1:85387
0
1/10 Miles
verizonwireless
GeoPlan v5.7
Proprietary and Confidential

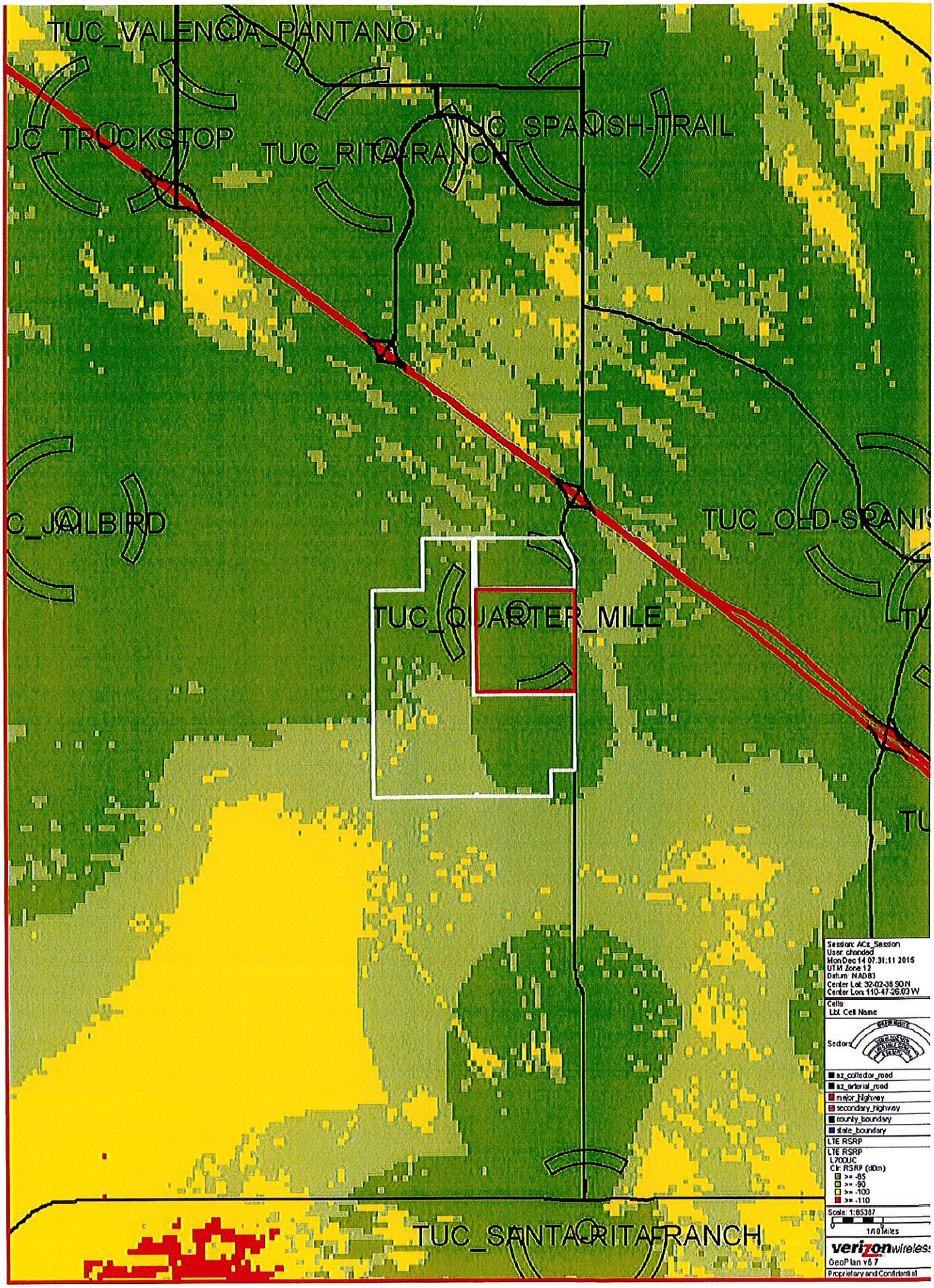
TUC_VALENCIA_PANTANO
TUC_SPANISH-TRAIL
TUC_RITA-RANCH
TUC_QUARTER_MILE
TUC_SANTA-RITA-RANCH
Session: ACs_Session
User: chonded
Mon Dec 14 07:31:11 2015
UTM Zone 12
Datum: NAD83
Center Lat: 32-02-38.90N
Center Lon: 110-47-26.03W
Cells
Lbl Cell Name
Sectors
az_collector_road
az_arterial_road
major_highway
secondary_highway
county_boundary
state_boundary
LTE RSRP
LTE RSRP
L700UC
Cir RSRP (dBm)
>= -85
>= -90
>= -100
>= -110
Scale: 1:85387
1/10 Miles
verizonwireless
GeoPlan v6.7
Proprietary and Confidential