31 Exploration Test Holes
Test Hole Location Map
Explanation
PIMA COUNTY PROPERTY
EX-96 2103.6
TEST HOLE LOCATION/ELEVATION
A——A'
CROSS SECTION LINE
Y-1
PRODUCTION WELL
N
FEET
0
400
800
PLATE 1
INTERSTATE 10
SILVERBELL RD.
CORTARO RD.
Y-4
Y-2
Y-1
A
A'
B
B'
C
C'
D
D'
E
E'
EX-96 2103.6
EX-95 2105.4
EX-66 2104.9
EX-67 2105.1
EX-68 2107.4
EX-94 2108.9
EX-69 2108.0
EX-93 2112.9
EX-70 2108.6
EX-71 2112.4
EX-92 2112.6
EX-72 2113.5
EX-91 2117.5
EX-73 2115.6
EX-90 2116.3
EX-74 2117.0
EX-89 2119.2
EX-88 2119.8
EX-75 2119.5
EX-87 2122.4
EX-76 2120.4
EX-86 2122.7
EX-77 2123.0
EX-85 2125.6
EX-78 2124.9
EX-84 2126.6
EX-79 2127.0
EX-80 2135.6
EX-81 2139.5
EX-83 2142.0
EX-82 2140.8

PLATE 2

Looking Northeast

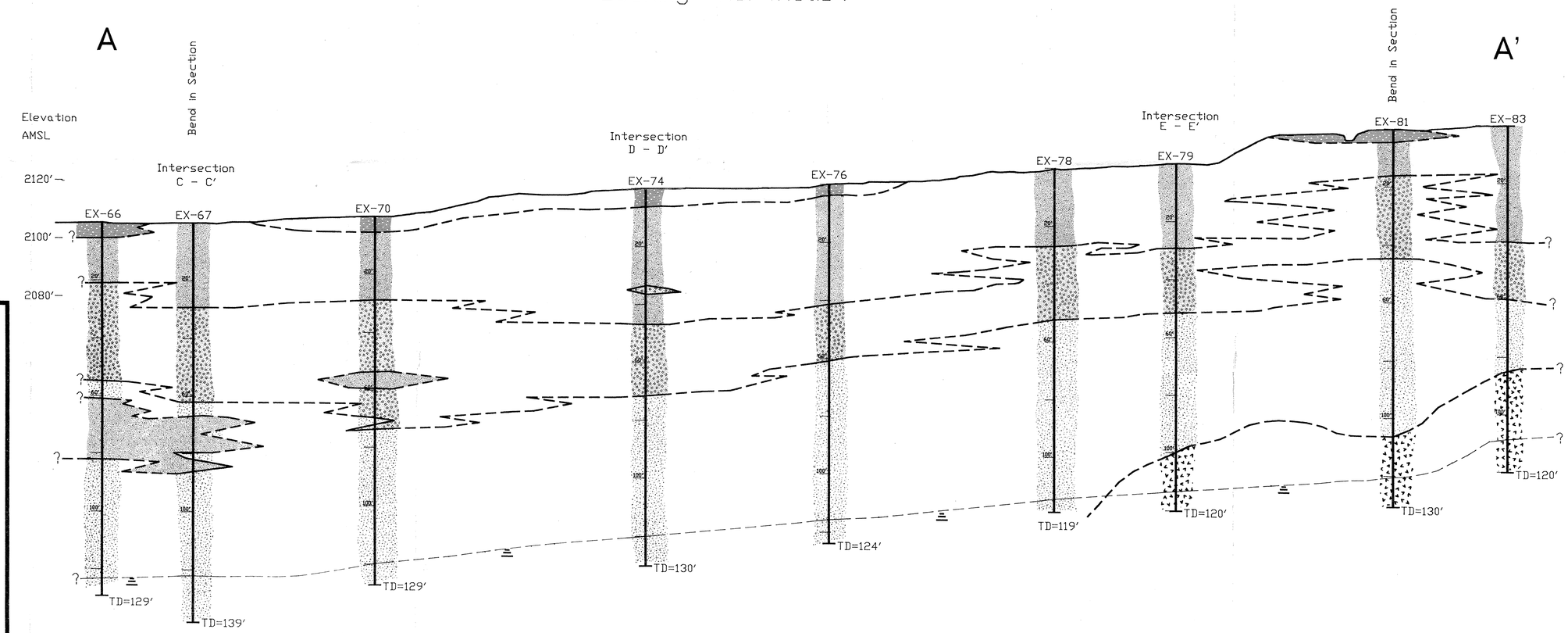

31 Exploration Test Holes

Cross Section A - A'

Explanation

- UNIT 1 - Sandy loam
- UNIT 2 - Volcanic, clayey, sandy gravel
- UNIT 3 - Volcanic & metamorphic sandy gravel
- UNIT 4 - Metamorphic, clayey, sandy gravel
- UNIT 5 - Volcanic, calcareous, sandy, clayey gravel
- Static Water Level

Horizontal Scale 400'

Vertical Scale 20'

PLATE 3

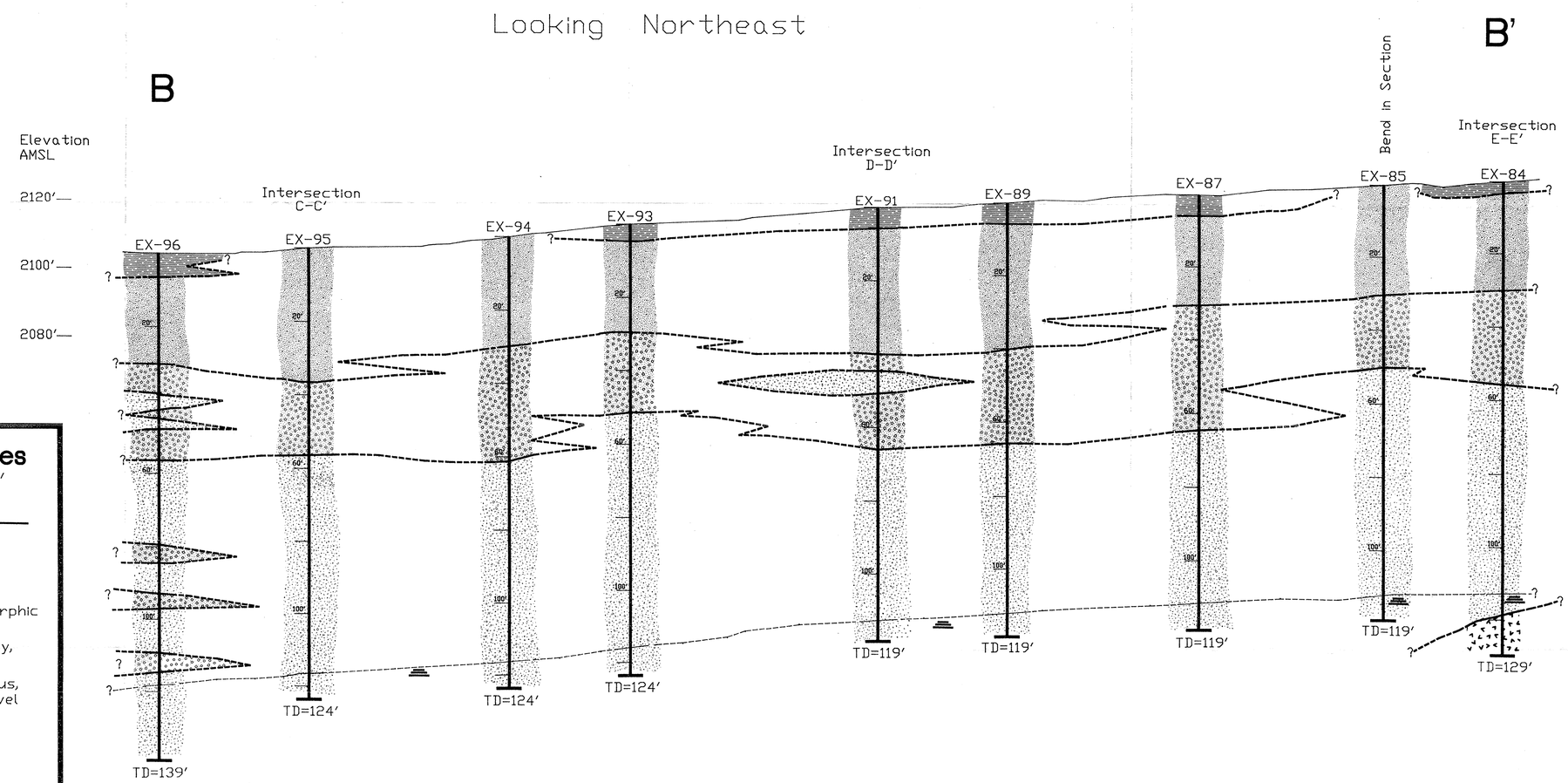

31 Exploration Test Holes

Cross Section B - B'

Explanation

- UNIT 1 - Sandy loam
- UNIT 2 - Volcanic, clayey, sandy gravel
- UNIT 3 - Volcanic & metamorphic sandy gravel
- UNIT 4 - Metamorphic, clayey, sandy gravel
- UNIT 5 - Volcanic, calcareous, sandy, clayey gravel
- Static Water Level

Horizontal Scale 400'

Vertical Scale 20'

PLATE 4

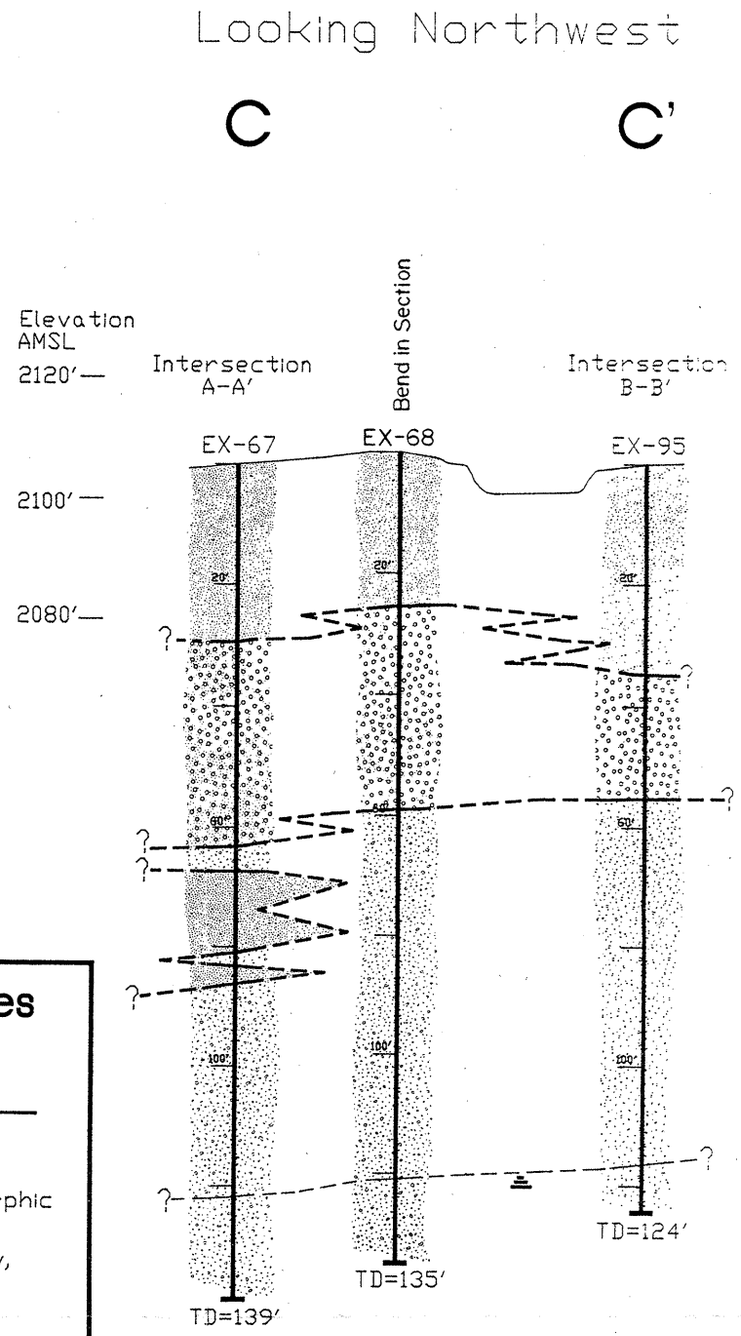

31 Exploration Test Holes

Cross Section C - C'

Explanation

- UNIT 2 - Volcanic, clayey, sandy gravel
- UNIT 3 - Volcanic & metamorphic sandy gravel
- UNIT 4 - Metamorphic, clayey, sandy gravel
- Water Static Level

Horizontal Scale 400'

Vertical Scale 20'

PLATE 5

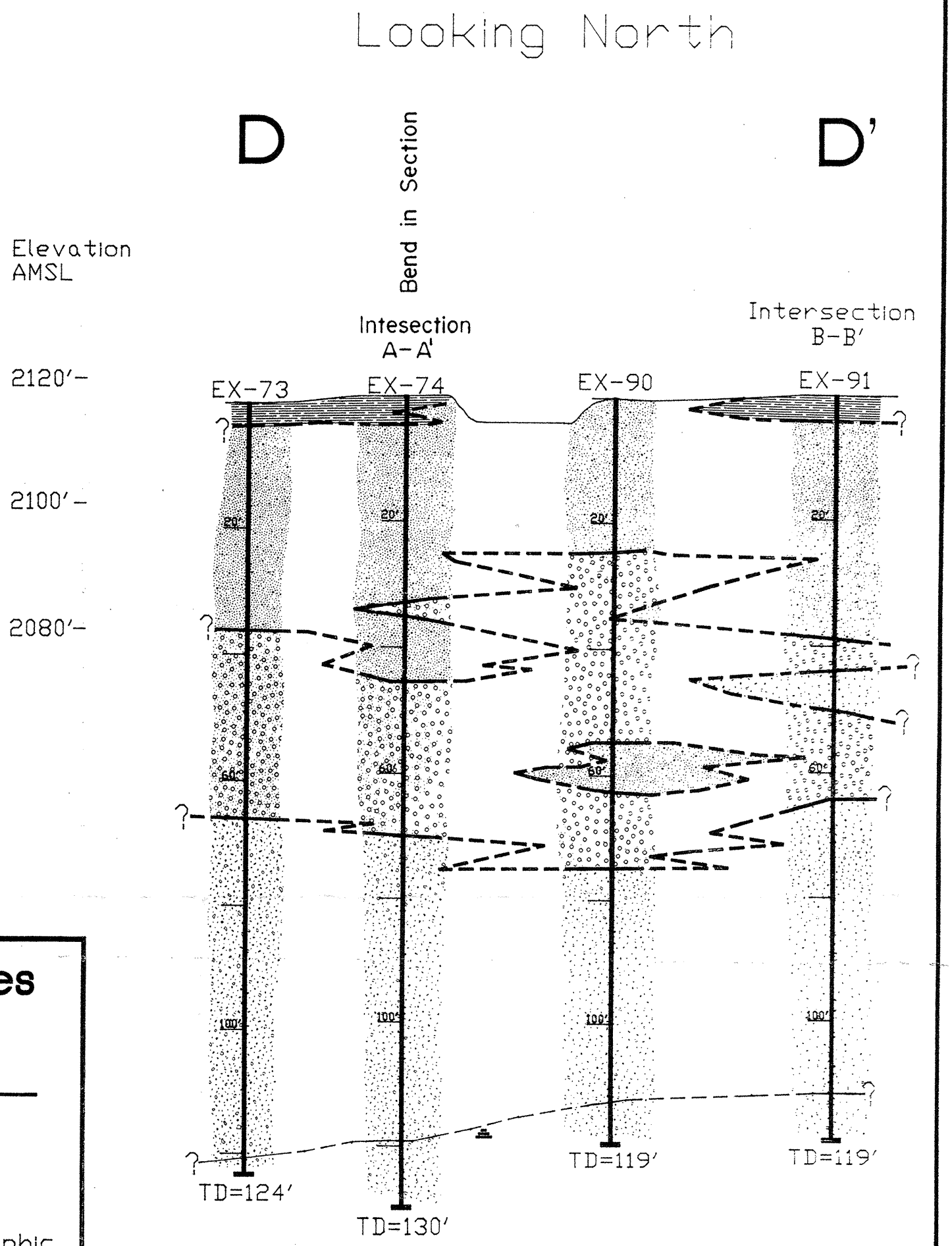

31 Exploration Test Holes

Cross Section D - D'

Explanation

- UNIT 1 - Sandy loam
- UNIT 2 - Volcanic, clayey, sandy gravel
- UNIT 3 - Volcanic & metamorphic sandy gravel
- UNIT 4 - Metamorphic, clayey, sandy gravel
- Static Water Level

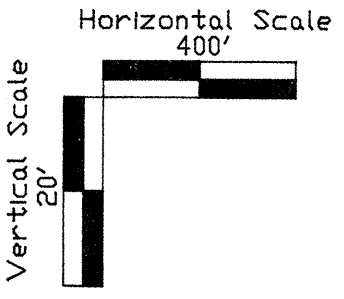

PLATE 6

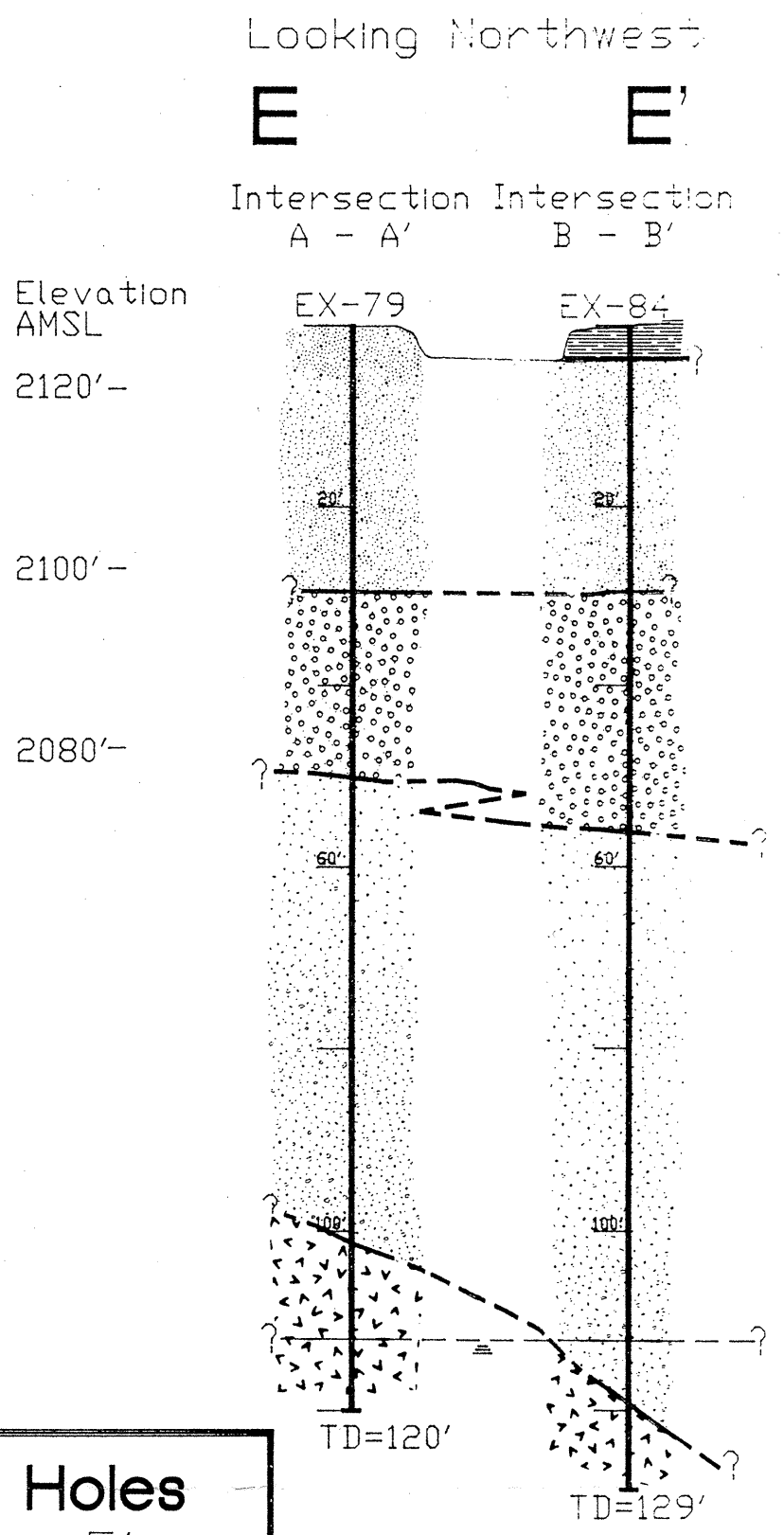

31 Exploration Test Holes

Cross Section E - E'

Explanation

- UNIT 1 - Sandy loam
- UNIT 2 - Volcanic, clayey, sandy gravel
- UNIT 3 - Volcanic & metamorphic sandy gravel
- UNIT 4 - Metamorphic, clayey, sandy gravel
- UNIT 5 - Volcanic, calcareous, sandy, clayey gravel
- Static Water Level

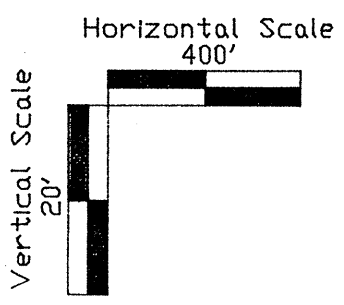

PLATE 7

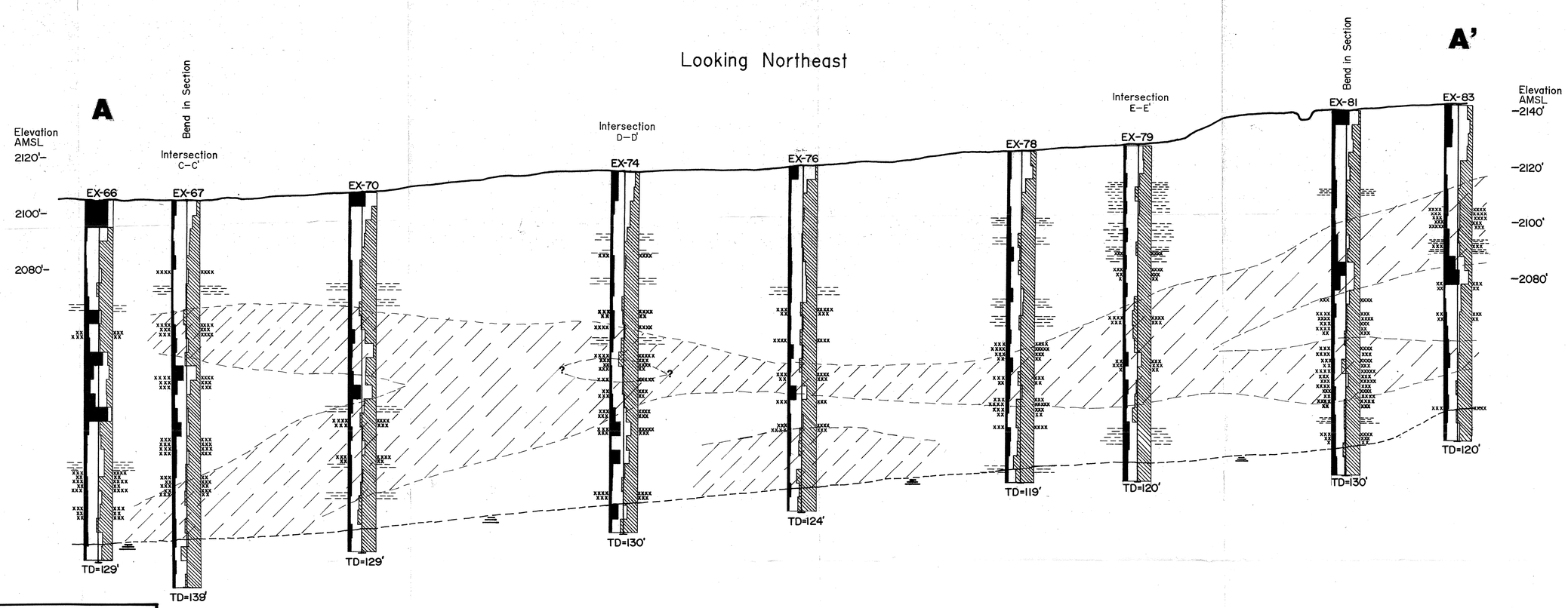

31 Exploration Test Holes

Cross Section A–A'

Explanation

- fines
- sand
- gravel
- Manganese Oxide Staining gravels
- Salmon colored clay Coating sand and gravel
- Damp horizons, projected
- Static Water Level

Horizontal Scale 400'

Vertical Scale 20'

PLATE 8

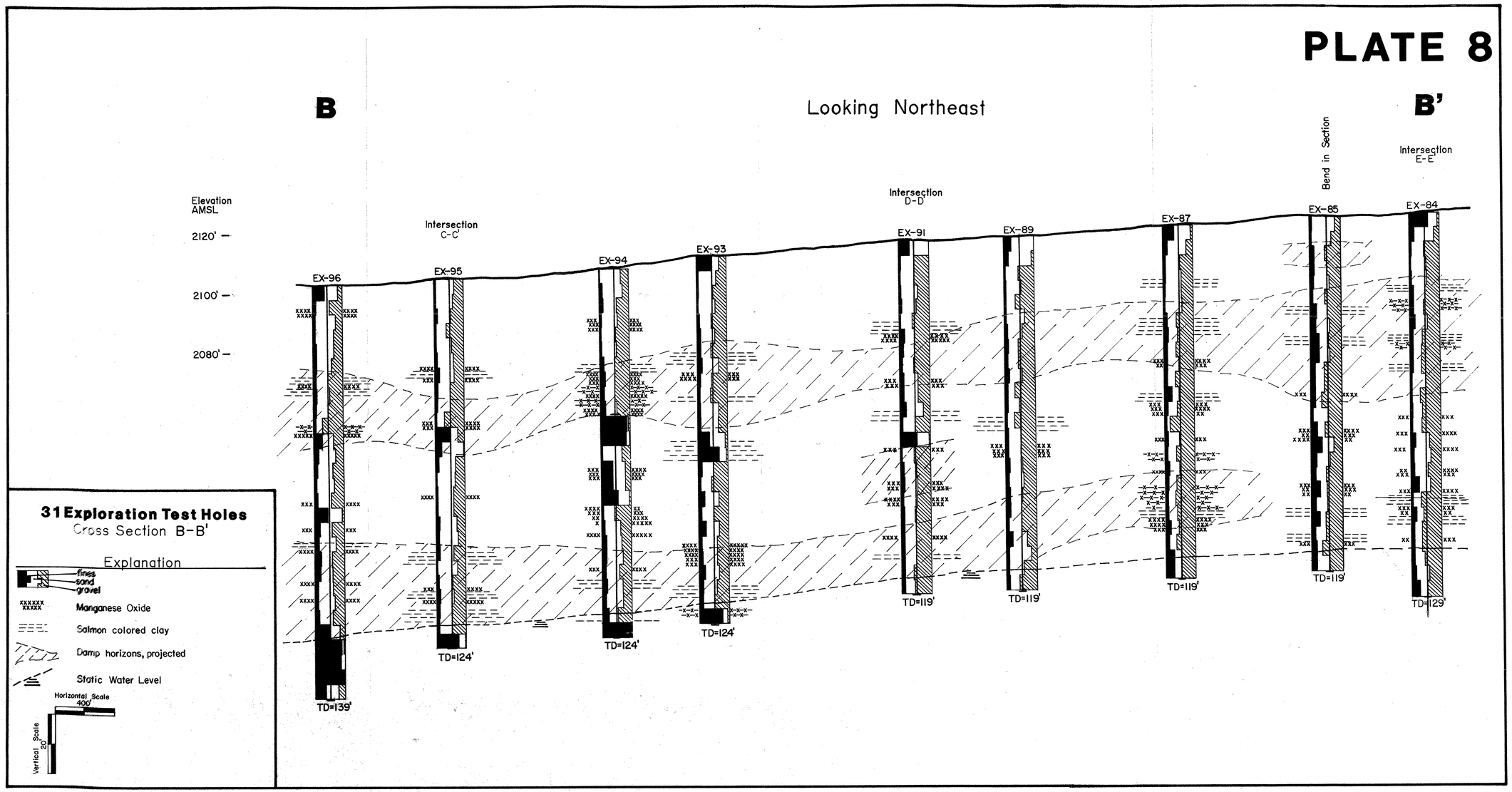
B
B'
Looking Northeast
Elevation AMSL
2120'
2100'
2080'
Intersection C-C'
Intersection D-D'
Intersection E-E'
Bend in Section
EX-96
EX-95
EX-94
EX-93
EX-91
EX-89
EX-87
EX-85
EX-84
TD=139'
TD=124'
TD=124'
TD=124'
TD=119'
TD=119'
TD=119'
TD=119'
TD=129'
31 Exploration Test Holes
Cross Section B-B'
Explanation
fines
sand
gravel
Manganese Oxide
Salmon colored clay
Damp horizons, projected
Static Water Level
Horizontal Scale
400'
Vertical Scale
20'

PLATE 9

Looking Northwest

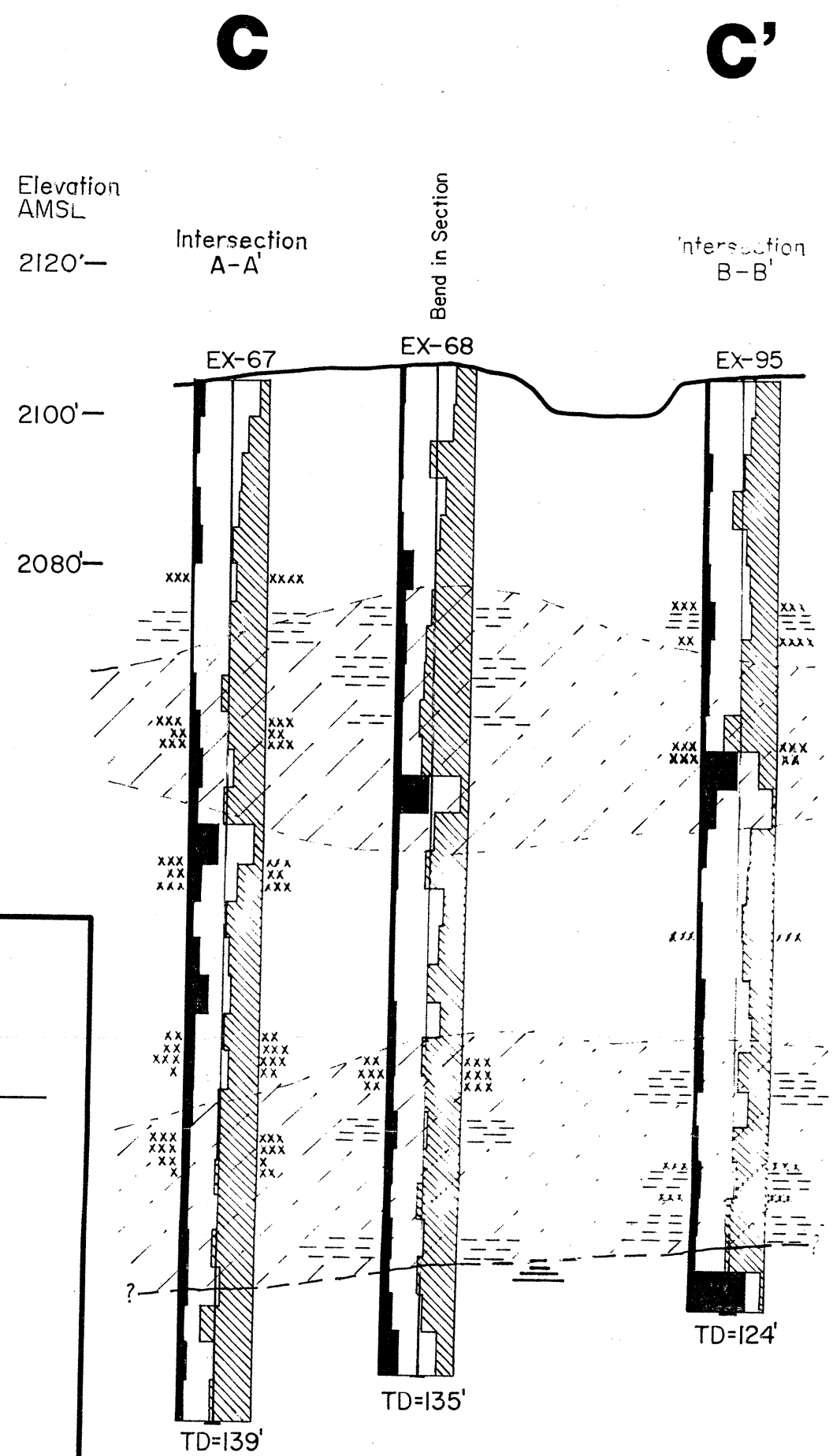

31 Exploration Test Holes

Cross Section C-C'

Explanation

- fines
- sand
- gravel
- Manganese Oxide Staining gravels
- Salmon colored clay coating sand and gravel
- Damp horizons, projected
- Static Water Level

Horizontal Scale 400'

Vertical Scale 20'

PLATE 10

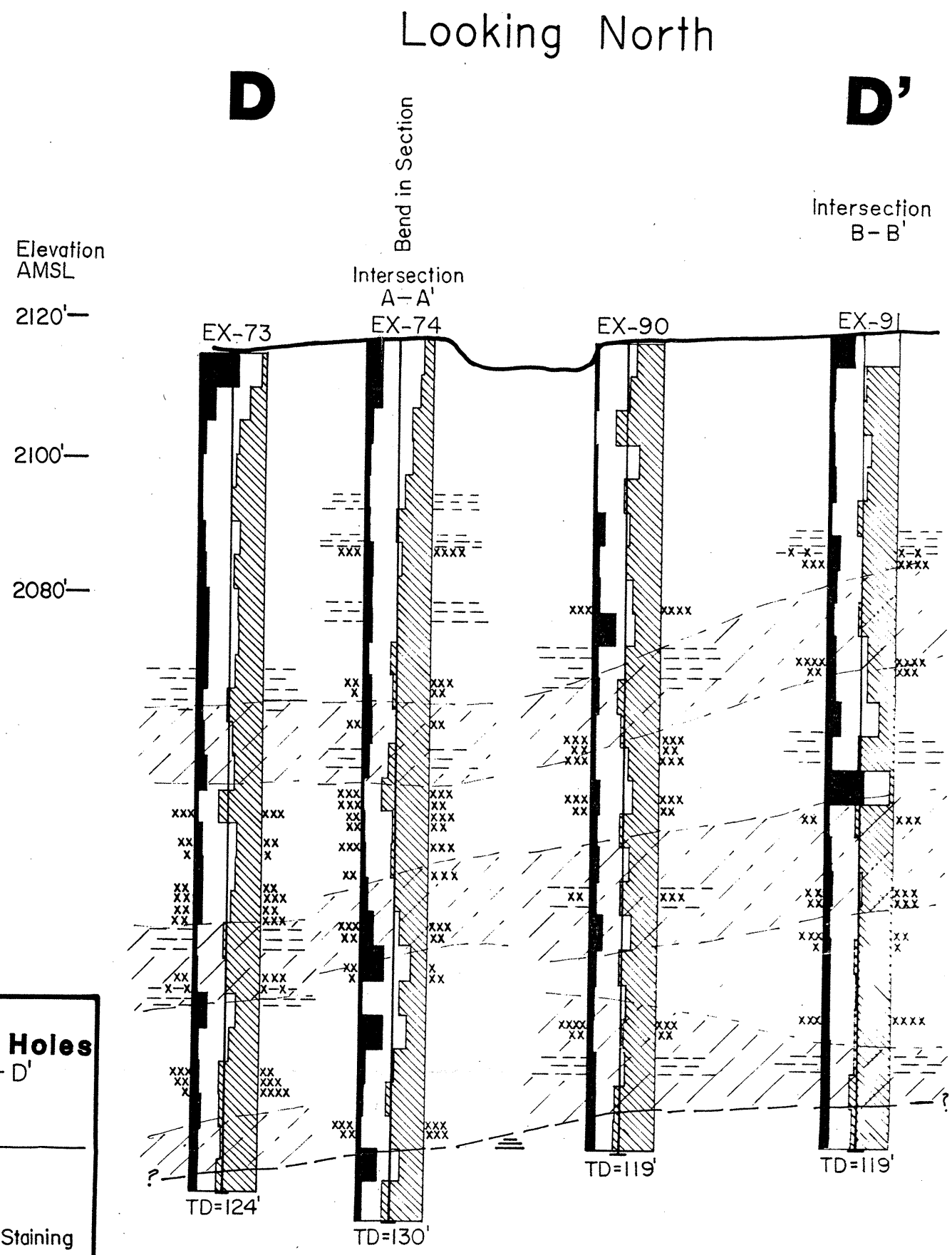

31 Exploration Test Holes
Cross Section D-D'

Explanation

- fines
- sand
- gravels
- Manganese Oxide Staining gravels
- Salmon colored clay coating sand and gravel
- Damp horizons, projected
- Static Water Level

Horizontal Scale 400'

Vertical Scale 20'

PLATE 11

Looking Northwest

E **E'**

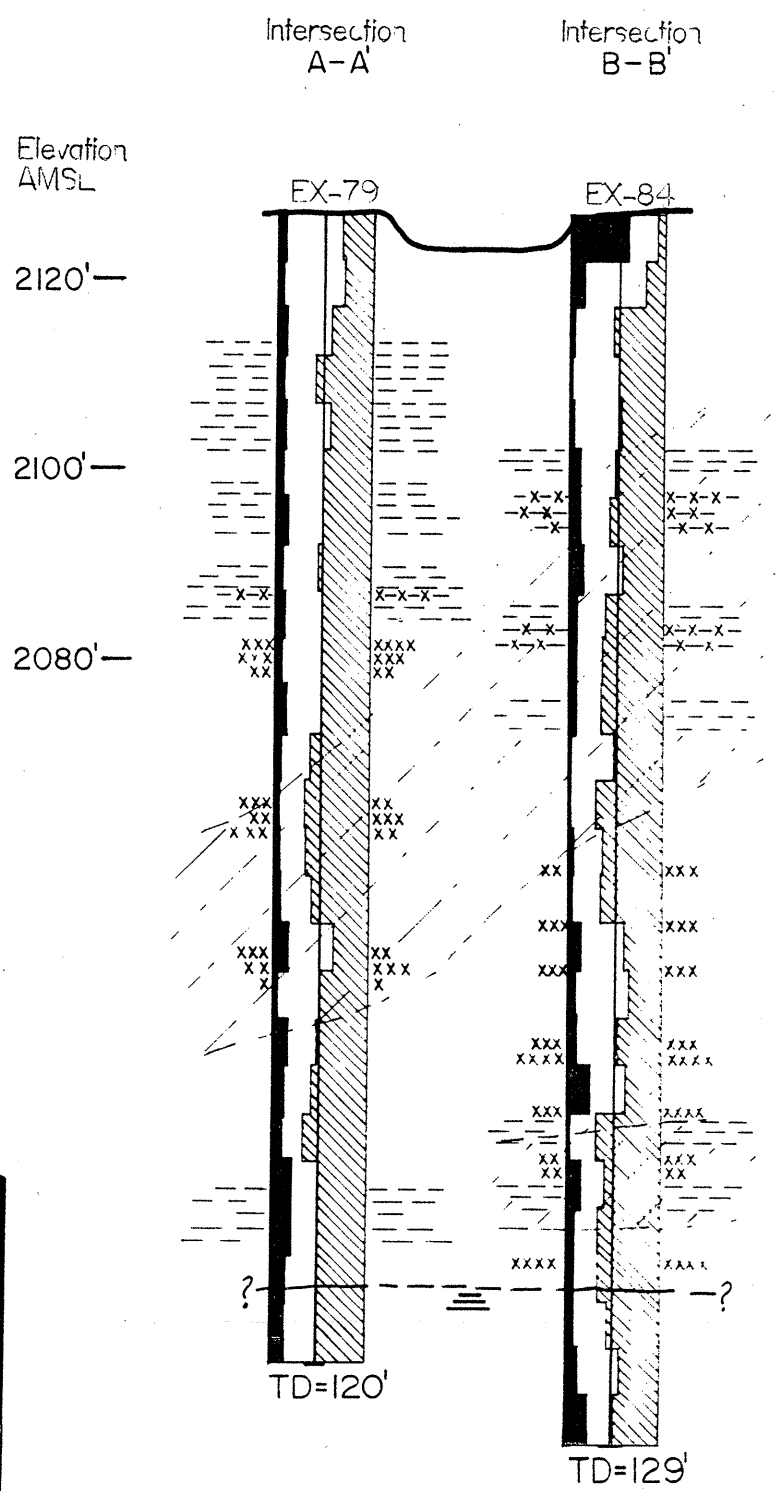

31 Exploration Test Holes

Cross Section E-E'

Explanation

- fines
- sand
- gravel

xxxx xxx xx — Manganese Oxide Staining gravels

Salmon colored clay coating sand and gravel

Damp horizons, projected

Static Water Level

Horizontal Scale 400'

Vertical Scale 20'