PIMA COUNTY
PROCUREMENT DEPARTMENT
DESIGN & CONSTRUCTION DIVISION • 130 W. CONGRESS STREET, 3RD FLOOR • TUCSON, ARIZONA 85701-1317
TELEPHONE (520) 724-3731 • FAX (520) 724-4434

June 13, 2016

ADDENDUM NO. 1

SOLICITATION NO. 220020 OLD VAIL MIDDLE SCHOOL, MARY ANN CLEVELAND WAY, VAIL (4OLVMS). MARY ANN CLEVELAND WAY AT KUSH CANYON LANE, TUCSON (4TAMAC)

This Addendum addresses questions raised through 4:00 PM on June 13, 2016, and at the pre-bid conference of June 7, 2016. This Addendum shall be incorporated and made part of the Bid Documents as though included therein. **This addendum is 29 pages.**

QUESTIONS/CLARIFICATIONS/REQUESTS FOR INFORMATION:

PRE-BID ATTENDANCE SIGN IN SHEET: The sign-in sheet for the pre-bid meeting held June 7, 2016, is available on the Pima County Procurement Department Design and Construction Division website at: http://www.pima.gov/procure/ifbrfp-dc.htm under the heading for this solicitation.

QUESTIONS:

Q) Will the Bid Due Date be changed?
A) Unless additional changes are made to the Bid Schedule, the Bid Due Date will remain as June 21, 2016, 2:00 PM Local Tucson Time.

1. **NOTICE OF INVITATION TO BID AND INSTRUCTION TO BIDDERS:**

Change the following:

FROM:

Estimated cost for the project is between $500,000.00 and $600,000.00. The project shall be complete and in place within 75 working days from Notice to Proceed. Liquidated damages for late delivery will be assessed per Pima County Standard Specification Section 108-9.

TO:

Estimated cost for the project is between $500,000.00 and $600,000.00. The work specified for project A, OLD VAIL MIDDLE SCHOOL, MARY ANN CLEVELAND WAY, VAIL (4OLVMS), shall be completed within seventy five (75) working days from the Notice to Proceed. The work specified for project B, MARY ANN CLEVELAND WAY AT KUSH CANYON LANE, TUCSON (4TAMAC), shall be completed within forty (40) working days from the Notice to Proceed. Project B construction shall be completed before starting construction on Project A. Liquidated damages for late delivery will be assessed per Pima County Standard Specification Section 108-9.

2. **BID SCHEDULE:**

Bid Schedule: Bidders are instructed to REMOVE all prior Bid Schedules in the bid documents and addenda, and REPLACE in their entirety with the attached EXHIBIT "A" – BID SCHEDULE - Revised June 13, 2016 (3 pages) (ATTACHMENT 1) Failure to use the corrected bid schedule may result in bid rejection. The revised bid schedule with this addendum incorporates the following changes:

MH

For PROJECT A: OLD VAIL MIDDLE SCHOOL, VAIL (4OLVMS) the following changes are to be made:

Revise the following Item Number and Description:
From: Item 1090002 Fuel Adjustment
To: Item 1090010 Fuel Adjustment Allowance

Include Item 2030907 Borrow (Discretionary)

Revise Item Description and Increase Quantity:
From: Item 2010004 Preservation Fencing
To: Item 2010004 Preservation Fencing (Orange Mesh)
Increase the number of Linear Feet (LF) from 598 LF to 3,500 LF

Revise the following Item Number and Description:
From: Item 2050001 Grading Roadway for Pavement
To: Item 2050003 Roadway Grading

Delete: Item 4040125 Fog Coat.

Revise the following Item Number:
From: Item 7040130 Pavement Marking (white extruded thermoplastic)(Transverse)(.09")
To: Item 7040005 Pavement Marking (white extruded thermoplastic)(.09")

Revise the following Item Number:
From: Item 7040140 Pavement Marking (yellow extruded thermoplastic)(Transverse)(.09")
To: Item 7040006 Pavement Marking (yellow extruded thermoplastic)(.09")

Item 8061700 Landscape pruning: Increase number of hours from 4 to 50.

Add: Item 8100005 Sediment Log (Discretionary)

Revise the following Item Description:
From: Item 8100006 Sediment Waddle (Discretionary)
To: Item 8100006 Sediment Wattle (Discretionary)

Revise the following Item Number:
From: Item 8100012 Sediment Log (Discretionary)
To: Item 8100012 AZPDES/NPDES ALLOWANCE(Modified)

Delete: Item 9250001 Construction Surveying and Layout

Delete: Item 9330002 Handrail (Detail G, Sheet 5)
Add: Item 9330002 Handrail; Unit: L.F.; Quantity 1,300

For PROJECT B: MARY ANN CLEVELAND WAY AT KUSH CANYON LANE, TUCSON (4TAMAC) the following bid items are to be <u>added</u>.

5150005 - Utility Potholing, Depth <12', Unit: Each, Quantity: 25

5150101 - Utility Impact Allowance; Unit: USD, Quantity: 5,000, Unit Price: $1.00, Amount: $5,000.00

7310030 - Pole (Type G), Unit: Each, Quantity: 4

7310215 – Pole Foundation (Type G), Unit: Each, Quantity: 4

7320015 - Electrical Conduit (1 1/2") (PVC), Unit: LF, Quantity: 80

7320400 – Pull Box (No. 3 ½), Unit: Each, Quantity: 12

7320410 – Pull Box (No. 5), Unit: Each, Quantity: 2

7320600 - Conductors (Traffic Signals and Integral Street Lighting), Unit: LS, Quantity: 1

7320616 - Conductor (No. 6) (Insulated) , Unit: LF, Quantity: 4,338

7320620 - Conductor (No. 10) (Insulated) , Unit: LF, Quantity: 762

7320628 - Conductor (No. 8) (Bare), Unit: LF, Quantity: 2,249

7330045 - Traffic Signal Face (Modified F), Unit: Each Quantity: 6

7330202 - Traffic Signal Face (Pedestrian) (Count Down), Unit: Each, Quantity: 2

9010001 – Mobilization, Unit: L.S., Quantity: 1

9300100 - Incidental Items Allowance, Unit: USD, Quantity: 5,000, Unit Price: $1.00, Amount: $5,000.00

For PROJECT B: MARY ANN CLEVELAND WAY AT KUSH CANYON LANE, TUCSON (4TAMAC) the following bid items are to be deleted.

7320150 – Tracer Wire

For PROJECT B: MARY ANN CLEVELAND WAY AT KUSH CANYON LANE, TUCSON (4TAMAC) the following bid items Quantities are to be changed.

7310535 - Mast Arm (20 ft.) (Tapered) (Luminaire), Quantity: From 1 to 5

7320020 - Electrical Conduit (2") (PVC), Quantity: From 40 to 2,114

7320030 - Electrical Conduit (3") (PVC), Quantity: From 30 to 125

7360050 - Luminaire (Horizontal Mount) (LED), Quantity: From 2 to 6

7360190 - Photo Electric Control, Quantity: From 1 to 2

3. **SPECIAL PROVISIONS**:

The following changes are to be made as follows:

GENERAL NOTES:

2. Scope of Work is revised to include:

   This project consists of two projects: 1) Project A: Old Vail Middle School, Mary Ann Cleveland Way, Vail, Safe Routes to School Program (4OLVMS); and 2) Project B: Mary Ann Cleveland Way at Kush Canyon Lane, Tucson, Transportation Alternative Program (4TAMAC).

   Contract award will be based on the lowest bid for combined total of Project A and Project B.

3. Contract Time is revised to read:

   The work specified for project A shall be completed within seventy five (75) working days.

   The work specified for project B shall be completed within forty (40) working days.

   Project B construction shall be completed before starting construction on Project A.

8. Construction Survey and Layout:

   Revise to read Construction survey and layout will be provided by Pima County. Section 925 - Construction Surveying and Layout of the Special Provisions is hereby deleted

Item 2010004 – PRESERVATION FENCING (ORANGE MESH) (ATTACHMENT 2) (2 pages)

All pavement removal and obliteration will be measured and paid under the lump sum Item 2020001 Removal of Structures and Obstructions.

Include the following Section 701 Maintenance and Protection of Traffic on Page SP-89 of the Special Provisions.

SECTION 701 - MAINTNENANCE AND PROTECTION OF TRAFFIC

701-4 METHOD OF MEASUREMENT of the Standard Specifications is revised to read:

Basic Maintenance and Protection of Traffic, Construction Area Elements, Flagging Services, and Provide Detours will be measured as a single, complete, lump sum item.

701-5 BASIS OF PAYMENT of the Standard Specifications is revised to read:

The accepted quantity of Basic Maintenance and Protection of Traffic, Construction Area Elements, Flagging Services, and Provide Detour will be paid for at the contract lump sum price under Item 7010005 Traffic Control. The price shall be full compensation for the work.

ITEM 9130009 – Riprap (Hand Placed) (Grouted)

Delete Special Provisions for Item 9130009 – Riprap (Hand Placed) (Grouted) shown on Page SP-151 and SP-152 of the Special Provisions. All riprap installed on the project will be hand placed.

AMENDMENT TO APPENDIX E:

Appendix E Standard Detail 105 revised 09/15 HANDRAIL (ATTACHMENT 3) (2 pages)

Appendix E Delete Standard Detail 207 and replace with Standard Detail Revised 09/15 (ATTACHMENT 4) (10 pages)

Appendix E Include Detail 200 revised 09/15-- Concrete Sidewalk. (ATTACHMENT 5) (2 pages)

4. PLAN SHEETS:

Replace sheets HC1 (3 of 35), DT1 (5 of 35), R1 (14 of 35), MS1 (15 of 35), and MS2 (16 of 35) with the attached plan sheets. (ATTACHMENT 6) (5 pages)

All other requirements and terms of the Solicitation remain unchanged. Respondents are required to certify receipt of this addendum in their Bid Proposal. Failure to do so may result in declaration of the bid as non-responsive.

All questions shall be addressed in writing to Anthony V. Schiavone, Commodity/Contracts Officer, email anthony.schiavone@pima.gov or fax number 520-724-4434. Please submit them no later than Wednesday, June 15, 2016. Any questions submitted after the 15th might not get a response.

/s/Anthony V. Schiavone

Anthony V. Schiavone – Commodity/Contracts Officer

EXHIBIT "A" – BID SCHEDULE Revised June 13, 2016 (3 pages)

PROJECT A: OLD VAIL MIDDLE SCHOOL, VAIL (4OLVMS)

ITEM NO.	ITEM DESCRIPTION	UNIT	QUANTITY	UNIT PRICE	AMOUNT
1090010	FUEL ADJUSTMENT ALLOWANCE	USD	3,500	$1.00	$3,500.00
2010001	CLEARING AND GRUBBING	L.S.	1		
2010004	PRESERVATION FENCING (Orange Mesh)	L.F.	3,500		
2010010	CLEARING AND GRUBBING (Noxious and Invasive Species Control Allowan	USD	3,000	$1.00	$3,000.00
2020001	REMOVAL OF STRUCTURES AND OBSTRUCTIONS	L.S.	1		
2030907	BORROW (DISCRETIONARY)	C.Y.	300		
2050003	ROADWAY GRADING	S.Y.	2,213		
2050010	PATHWAY GRADING	S.Y.	4,540		
3030003	AGGREGATE BASE	C.Y.	266		
4060002	ASPHALTIC CONCRETE (NO. 2)	TON	405		
4060003	ASPHALTIC CONCRETE (NO. 3)	TON	504		
5103101	POTABLE WATER, ADJUST VALVE BOX AND COVER	EACH	3		
5103106	POTABLE WATER, ADJUST ARV BOX AND COVER	EACH	1		
5150005	UTILITY POTHOLING, DEPTH <12'	EACH	12		
5150101	UTILITY IMPACTS ALLOWANCE	U.S.D.	20,000	$1.00	$20,000.00
6070010	SIGN POST (PERFORATED) (SINGLE)	L.F.	122		
6070020	SIGN POST (U-CHANNEL) (GALVANIZED STEEL)	EACH	13		
6070110	FOUNDATION FOR SIGN POST (PERFORATED)	EACH	10		
6080016	SIGN PANEL (TRAFFIC CONTROL) (PERMANENT) (TYPE IV)	S.F.	34		
6080081	FLAT SHEET ALUMINUM w/DIRECT APPLY or SILK-SCREEN CHARACTE	S.F.	12		
7010005	TRAFFIC CONTROL	L.S.	1		
7040005	PAVEMENT MARKING(WHITE EXTRUDED THEROPLASTIC) (0.090")	L.F.	6,100		
7040006	PAVEMENT MARKING(YELLOW EXTRUDED THEROPLASTIC) (0.090")	L.F.	4,795		
7040032	PAVEMENT MARKING (WHITE EXTRUDED THERMOPLASTIC) SGL. ARROW (0.090")	EACH	4		
7040062	PAVEMENT MARKING (WHITE EXTRUDED THERMOPLASTIC) (ONLY) (0.090")	EACH	2		
7050080	PAVEMENT MARKING, PREFORMED, TYPE I, BIKE LANE LEGEND AND SYMBOL	EACH	3		
7060020	PAVEMENT MARKER, REFLECTIVE, (TYPE C, CLEAR, RED)	EACH	7		
7060025	PAVEMENT MARKER, REFLECTIVE, (TYPE D, YELLOW, TWO-WAY)	EACH	72		
7080001	PAINTED PAVEMENT MARKINGS	L.F.	10,895		
7080010	PAINTED PAVEMENT SYMBOL OR LEGEND	EACH	12		
8030040	GRANITE MULCH	S.Y.	1,560		
8050003	SEEDING (CLASS II)	ACRE	1		
8050009	SEEDING (CLASS II) (2nd APPLICATION)	ACRE	1		
8061700	LANDSCAPE PRUNING	HOUR	50		
8080111	MISCELLANEOUS LANDSCAPE WORK ALLOWANCE	USD	1,000	$1.00	$1,000.00
8100001	AZPDES/NPDES (ORIGINAL)	L.S.	1		
8100005	SEDIMENT LOG (DISCRETIONARY)	L.F.	3,000		
8100006	SEDIMENT WATTLE (DISCRETIONARY)	L.F.	4,300		
8100012	AZPDES/NPDES ALLOWANCE(Modified)	USD	3,000	$1.00	$3,000.00
9010001	MOBILIZATION	L.S.	1		
9050001	GUARD RAIL, W-BEAM, SINGLE FACE	L.F.	10		
9050028	GUARD RAIL TERMINAL (SKT 350)	EACH	1		
9080005	CONCRETE CURB, (STD. DTL. 209) (TYPE 2)	L.F.	523		
9080090	CONCRETE CURB TERMINAL SECTION (STD. DTL. 212)	EACH	6		

Page 1 of 3 FIRM NAME_____, INITIALS_____

PIMA COUNTY

EXHIBIT "A" – BID SCHEDULE, Revised June 13, 2016 cont.

PROJECT A CONTINUED:

ITEM NO.	ITEM DESCRIPTION	UNIT	QUANTITY	UNIT PRICE	AMOUNT
9080201	CONCRETE SIDEWALK, STD. DTL. 200	S.F.	1,252		
9080280	CURB ACCESS RAMP, STD. DTL. 207 (TYPE 1)	EACH	1		
9080281	CURB ACCESS RAMP, STD. DTL. 207 (TYPE 2)	EACH	4		
9080282	CURB ACCESS RAMP, STD. DTL. 207 (TYPE 3)	EACH	1		
9080292	CONCRETE LANDING (Detail H, on Sheet 5)	EACH	18		
9080402	CONCRETE HEADER	L.F.	219		
9080403	CONCRETE HEADER (STD. DTL. 213 MODIFIED, 18" DEPTH)	L.F.	80		
9130008	RIP RAP (HAND PLACED)	C.Y.	12		
9300100	INCIDENTAL ITEMS ALLOWANCE	USD	20,000	$1.00	$20,000.00
9330002	HANDRAIL	L.F.	1,300		
				PROJECT A TOTAL:	

Project B: MARY ANN CLEVELAND WAY AT KUSH CANYON LANE, TUCSON (4TAMAC)

ITEM NO.	ITEM DESCRIPTION	UNIT	QUANTITY	UNIT PRICE	AMOUNT
2020001	Removal of Structures & Obstructions	L.S.	1		
5150005	Utility Potholing, Depth <12'	EACH	25		
5150101	Utility Impacts Allowance	U.S.D.	5,000	$1.00	$5,000.00
6070010	Sign Post (Perforated) (Single)	LF	50		
6070110	Foundation for Sign Post (Perforated)	EACH	4		
6070221	Remove and Relocate Signs	L.S.	1		
6080016	Sign Panel (Traffic Control) (Permanent) (Type IV)	S.F.	21		
6080020	Sign Panel (Traffic Control) (Permanent) (Diamond Grade)	S.F.	67		
6080081	Flat Sheet Aluminum w/Direct Apply Or Silk-Screen Characters	S.F.	18		
7010005	Traffic Control	L.S.	1		
7040130	Pavement Marking (White Hot Extruded Thermoplastic) Transverse) (0.09")	L.F.	100		
7040140	Pavement Marking (Yellow Extruded Thermoplastic) (Transverse)) (0.09")	L.F.	505		
7080001	Painted Pavement Marking	L.F.	605		
7310030	Pole (Type G)	EACH	4		
7310045	Pole (Type Q)	EACH	2		
7310085	Post (Type I) (Pedestrian Push Button)	EACH	1		
7310215	Pole Foundation (Type G)	EACH	4		
7310230	Pole Foundation (Type Q)	EACH	2		
7310255	Post Foundation (Type 1) (Pedestrian Push Button)	EACH	1		
7310350	Control Cabinet Foundation	EACH	1		
7310376	Service Pedestal and BBS Cabinet Foundation	EACH	1		
7310410	Mast Arm (30 ft.) (Tapered)	EACH	1		
7310420	Mast Arm (40 ft.) (Tapered)	EACH	1		
7310525	Mast Arm (15 ft.) (Tapered) (Luminaire)	EACH	1		
7310535	Mast Arm (20 ft.) (Tapered) (Luminaire)	EACH	5		
7320015	Electrical Conduit (1 1/2") (PVC)	L.F.	80		
7320020	Electrical Conduit (2") (PVC)	L.F.	2,114		
7320025	Electrical Conduit (2 1/2") (PVC)	L.F.	150		
7320030	Electrical Conduit (3") (PVC)	L.F.	125		
7320040	Electrical Conduit (4") (PVC)	L.F.	80		
7320041	Electrical Conduit (4") (PVC) (Second in Trench)	L.F.	90		
7320125	Electrical Conduit (2 1/2") (Galv. Steel.)	L.F.	10		
7320126	Electrical Conduit (2 1/2") (RGS) (TEP Pole Sweep)	EACH	1		
7320400	Pull Box (No. 3 1/2)	EACH	12		
7320410	Pull Box (No. 5)	EACH	2		
7320420	Pull Box (No. 7)	EACH	1		
7320421	Pull Box (No. 7) (with Extension)	EACH	1		

Page 2 of 3 FIRM NAME_____, INITIALS_____

PIMA COUNTY

EXHIBIT "A" – BID SCHEDULE, Revised June 13, 2016, cont.

PROJECT B CONTINUED:

ITEM NO.	ITEM DESCRIPTION	UNIT	QUANTITY	UNIT PRICE	AMOUNT
7320600	Conductors (Traffic Signals and Integral Street Lighting)	L.S.	1		
7320616	Conductor (No. 6) (Insulated)	L.F.	4,338		
7320620	Conductor (No. 10) (Insulated)	L.F.	762		
7320628	Conductor (No. 8) (Bare)	L.F.	2,249		
7320690	Ground Rod (3/4" Dia. X 10')	EACH	4		
7320800	Service Pedestal Cabinet	EACH	1		
7320820	Battery Back Up Power System	EACH	1		
7320888	Electrical Service Installation Fees Allowance	USD	10,000	$1.00	$10,000.00
7320891	Electrical Service Installation (Intersection A)	L.S.	1		
7330045	Traffic Signal Face (Modified F)	EACH	6		
7330202	Traffic Signal Face (Pedestrian) (Count Down)	EACH	2		
7330320	Traffic Signal Mounting Assembly (Type V)	EACH	2		
7330350	Traffic Signal Mounting Assembly (Type XI)	EACH	2		
7330370	Traffic Signal Mounting Assembly (Astro-Brac)	EACH	4		
7340040	Traffic Signal Controller Assembly (Type IV)	EACH	1		
7350400	Pedestrian Push Button (2" ADA Button) (With Sign)	EACH	2		
7360050	Luminaire (Horizontal Mount) (LED)	EACH	6		
7360190	Photo Electric Control	EACH	2		
9010001	Mobilization	L.S.	1		
9300100	Incidental Items Allowance	USD	5,000	$1.00	$5,000.00
				Project B Total:	

Project A Total: _____

+

Project B Total: _____

=

COMBINED TOTAL: _____

SIGNATURE: _____ DATE: _____

PRINTED NAME & TITLE: _____

FIRM NAME: _____

Page 3 of 3

(201FENCING, 2/17/11)

ITEM 2010004 - PRESERVATION FENCING (ORANGE MESH)

ITEM 2010005 - PROTECTION FENCING (ORANGE PENNANT STRING)

1. DESCRIPTION

The work under this item consists of furnishing, installing, maintaining and removal of Preservation Fencing and Protection Fencing to protect existing plants, habitat areas and other features to remain in place and be undisturbed, and to prevent the public from accessing the site while under construction.

Contractor shall place preservation fencing (orange mesh type) at the approximate locations shown on the landscape plans and as refined by the Engineer.

Protection fencing (orange pennant string type) is not shown on the plans. The Contractor shall place Protection fencing (orange pennant string type) along all construction haul routes, soil and other construction stockpile areas, soil cement plant operations, and other construction areas adjacent to areas designated to remain in place and be undisturbed.

The Contractor shall submit a Preservation and Protection Fencing Plan which clearly delineates the location of both fencing types to the Project Engineer for approval prior to construction. No fencing shall be placed until the extents have been approved by the Engineer.

This item includes removal and proper disposal of all fencing at the completion of the project.

2. MATERIALS

Preservation Fencing (Orange Mesh) will consist of high visibility orange, heavy duty High Density Polyethylene (HDPE) that is UV resistant, stabilized with rectangular mesh type pattern. The fencing shall be four feet (4') tall.

Protection Fencing (Orange Pennant String) will consist of high visibility orange pennants, 12"x18" size, on OSHA approved 500lb. tensile strength pennant string.

Fence posts will be either wood or metal and shall be suitable for the work intended and a minimum of six feet (6') long. On-center spacing of fence posts shall be per the plan details.

3. CONSTRUCTION DETAILS

Contractor shall replace sections of downed or damaged preservation and/ or protection fencing within 1 working day, and shall monitor the status of the preservation and/ or protection fencing at least daily and prior to the beginning of work activities. Section of preservation and/ or protection fence temporarily removed for access to a preservation area shall be reinstalled at the end of the work day.

4. METHOD OF MEASUREMENT

Preservation Fencing shall be measured by the linear foot of fence in place.
Protection Fencing shall be measured by the linear foot of fence in place.

5. BASIS OF PAYMENT

Payment for Preservation Fencing, measured as provided above will be made at the contract unit price and shall include full compensation for furnishing all labor, materials, tools, equipment and incidentals required to furnish, install, maintain, remove and dispose of the preservation fencing.

Payment for Protection Fencing, measured as provided above will be made at the contract unit price and shall include full compensation for furnishing all labor, materials, tools, equipment and incidentals required to furnish, install, maintain, remove and dispose of the preservation fencing.

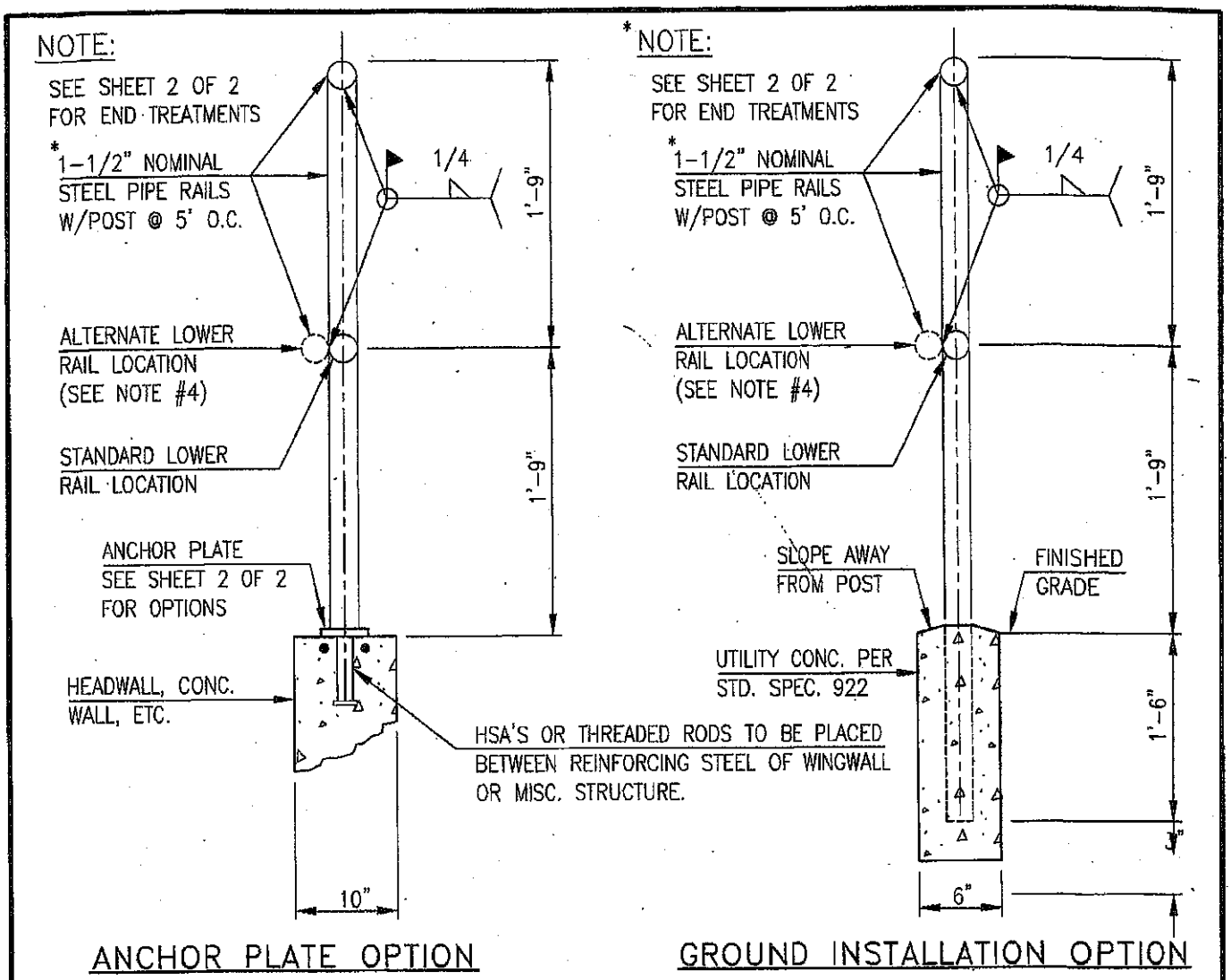

SECTION

*- 1-1/2" NOMINAL STEEL PIPE = 1-1/2" I.D. STD. STEEL PIPE (SCHEDULE 40).

- 1-1/2" NOMINAL STEEL PIPE = 2" O.D. (SCHEDULE 40).

NOTES:

1. EXPANSION JOINTS FOR UPPER AND LOWER RAILS SHALL OCCUR AT THE SAME LOCATION.
2. EXPANSION JOINTS SHALL BE LOCATED AT A MAXIMUM OF 30 FOOT INTERVALS.
3. WHEN APPROVED BY THE ENGINEER, AN INTERNAL SLEEVE MAY BE USED AT THE EXPANSION JOINTS.
4. ALTERNATE LOWER RAIL LOCATION ON NON-ROADWAY SIDE WHEN APPROVED BY THE JURISDICTION'S TRANSPORTATION ENGINEER.

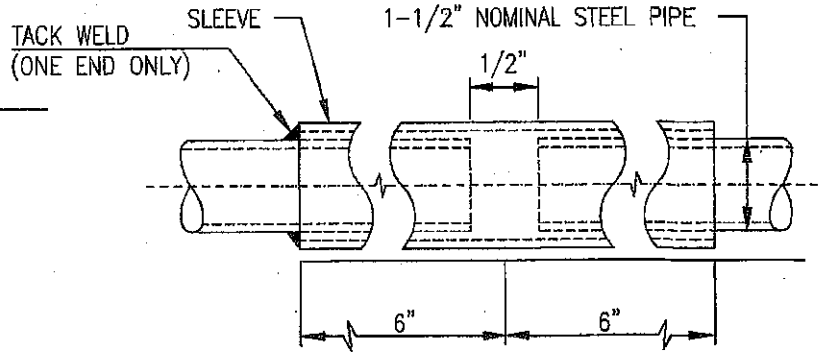

EXPANSION JOINT DETAIL

PAG Pima Association of Governments	DETAIL NO.	STANDARD DETAIL	ISSUED:
	105	HANDRAIL	10/88
			REVISED:
	SHEET 1 of 2		09/15

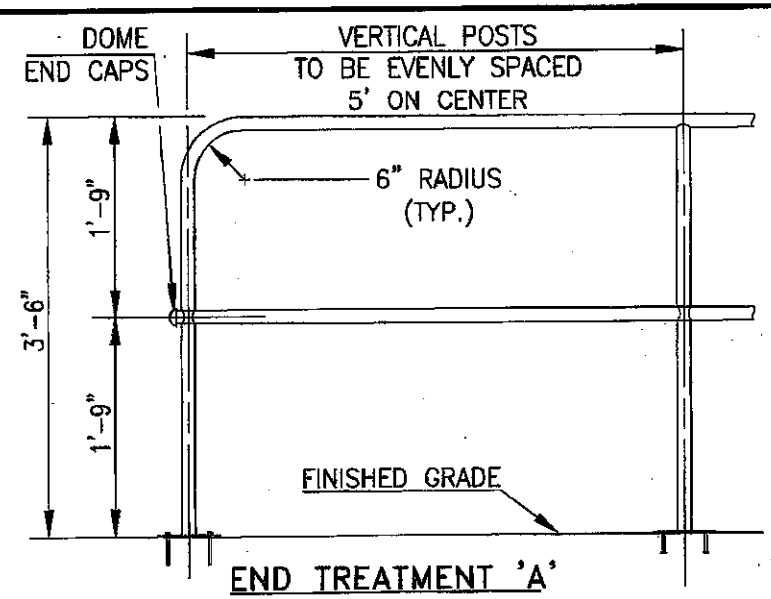

END TREATMENT 'A'

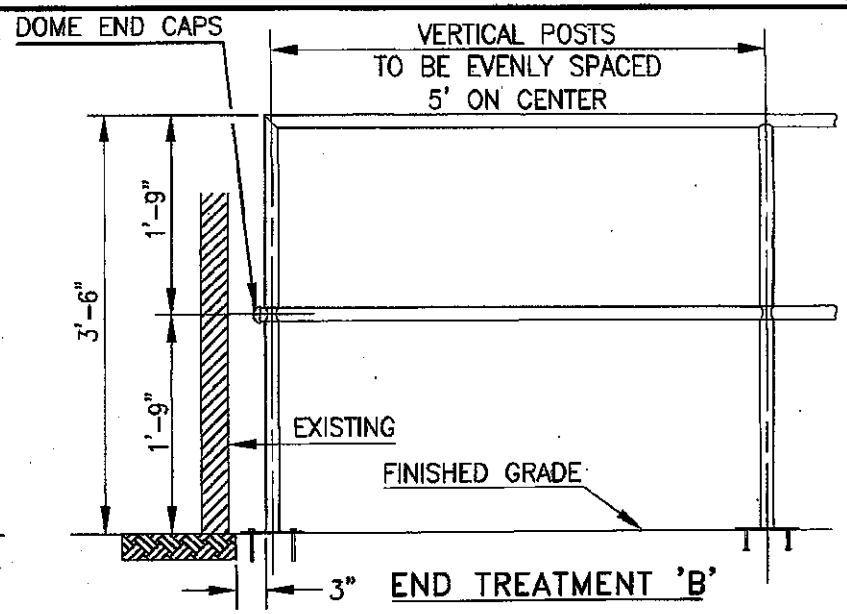

END TREATMENT 'B'

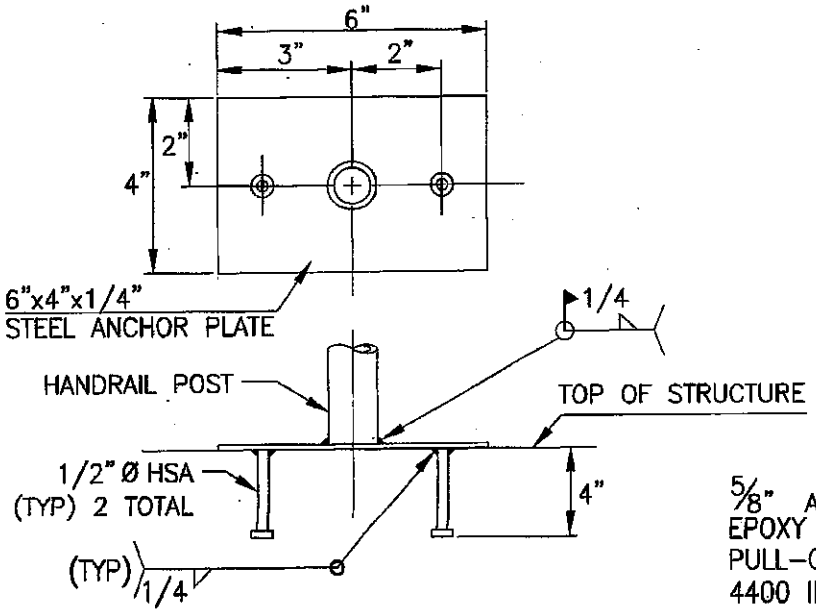

ANCHOR PLATE – OPTION 1

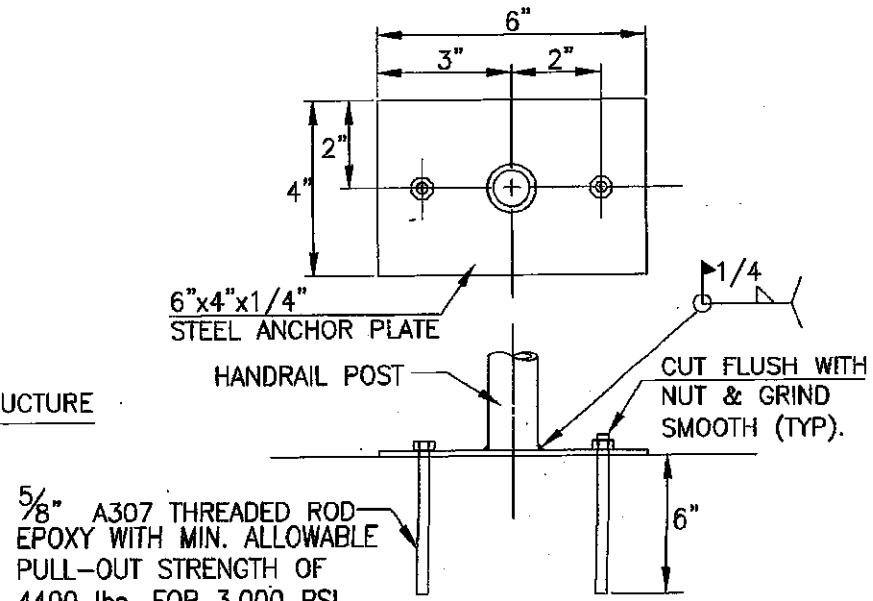

ANCHOR PLATE – OPTION 2

Pima Association of Governments

DETAIL NO.	105
SHEET 2 of 2	
STANDARD DETAIL	HANDRAIL
ISSUED:	6/91
REVISED:	9/15

(ATTACHMENT 4) (10 pages)

Pima Association of Governments

① ACCESS RAMP CONTROL POINT SEE PLANS FOR LOCATION

② DETECTABLE WARNING 6' x 2' (TYP.) SEE SHT. 10 OF 10

③ ROUGH BROOM FINISH (TYP.)

④ SEE PLANS FOR RADIUS.

⑤ BLENDED TRANSITION (TYP.)

⑥ MID-POINT OF CURB RADII (LOCATE RAMP LIMIT A MIN. 2" FROM MID-POINT)

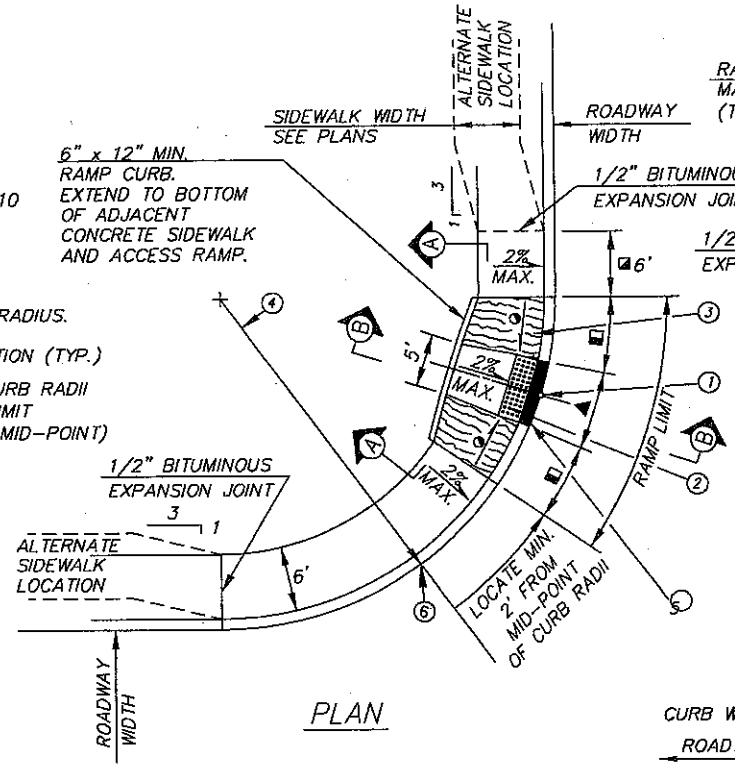

PLAN

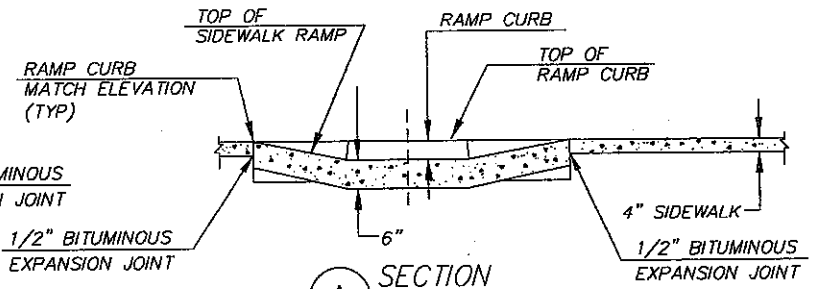

A SECTION

◪ PROVIDE MINIMUM OF 6' OF SIDEWALK ALONG CURB LINE (TYP.)

◑ SLOPE 5% MIN. & 8.33% (12:1) MAX.

◧ 6' MINIMUM, 15' MAXIMUM

▲ 6' WIDE AT BACK OF CURB

■ BLENDED TRANSITION

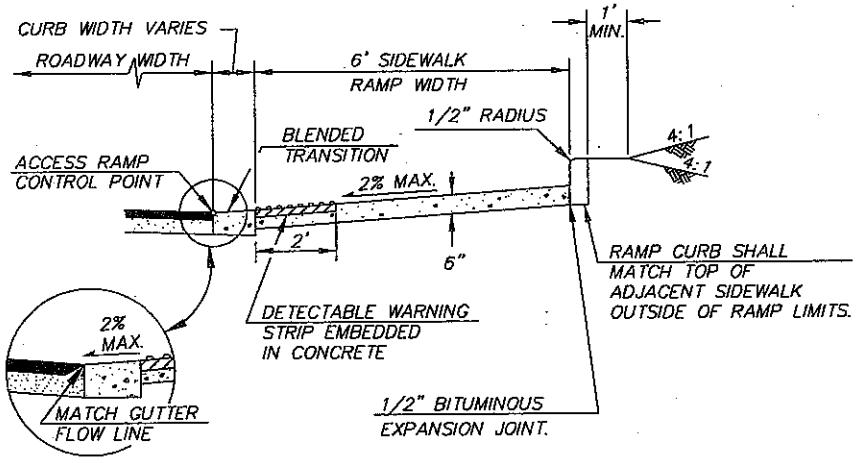

B SECTION

GENERAL NOTES:

1. SEE SHEET 10 OF 10 FOR ADDITIONAL CONSTRUCTION NOTES.
2. SEE STD. DETAIL 200 FOR JOINT REQUIREMENTS.
3. RAMP JOINTS ALONG RETURNS SHALL BE RADIAL FROM THE BACK OF CURB OR BACK OF DETECTABLE WARNING STRIP.
4. SEE PROJECT PLANS FOR RAMP LOCATION. CURB ACCESS RAMP SHALL BE ORIENTED TO ALIGN WITH THE CROSSWALK OR STOP BAR, MEDIAN REFUGE AREA, AND WITH THE OPPOSITE ACCESS RAMP IN THE DIRECTION OF PEDESTRIAN TRAVEL.
5. DRAINAGE INLETS ARE NOT PERMITTED WITHIN CROSSWALKS OR WITHIN 10' OF AN ACCESS RAMP.
6. CURB ACCESS RAMP LOCATION IS NOT RESTRICTED WITHIN CURB RADII ON LOCAL STREETS AND RESIDENTIAL COLLECTORS WITH A MAXIMUM 2,500 VEHICLES PER DAY AND NOT ADJACENT TO A MAJOR ARTERIAL.

NOT TO SCALE

DETAIL NO.	STANDARD DETAIL	ISSUED:
207	CURB ACCESS RAMP (TYPE 1)	4/10
SHEET 1 of 10		REVISED: 09/15

Pima Association of Governments

DETAIL NO.	STANDARD DETAIL
207	CURB ACCESS RAMP (DUAL RAMP CONFIGURATION) (TYPE 1)
SHEET 2 of 10	
REVISED: 09/15	ISSUED: 4/10

1. ACCESS RAMP CONTROL POINT. (SEE PLANS FOR LOCATION (TYP.))
2. DETECTABLE WARNING STRIP 6' x 2' (TYP.) SEE SHT. 10 OF 10
3. ROUGH BROOM FINISH (TYP.)
4. SEE PLANS FOR RADIUS
5. BLENDED TRANSITION (TYP.)
6. MID-POINT CURB RADII. (LOCATE RAMP LIMIT A MIN. 2' FROM MID-POINT (TYP.))

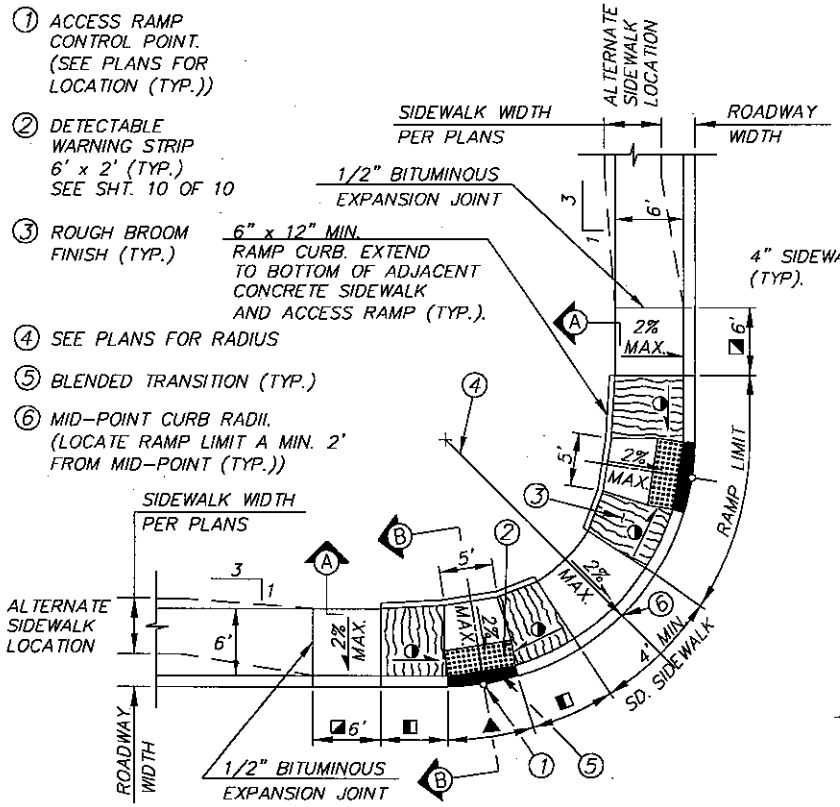

PLAN

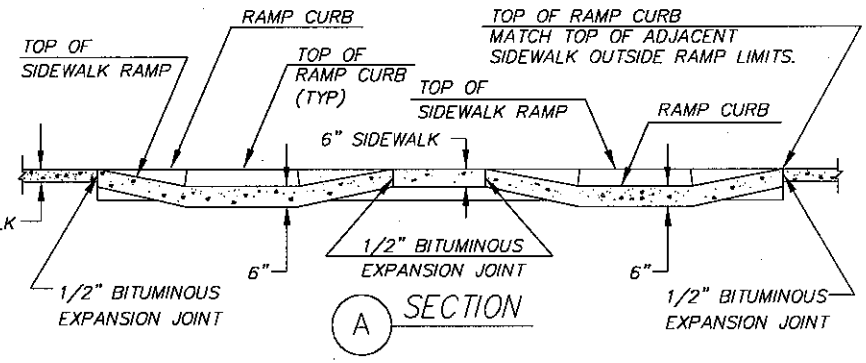

A SECTION

- ◪ PROVIDE MINIMUM OF 6' OF SIDEWALK ALONG CURB LINE (TYP.)
- ◑ SLOPE 5% MIN. & 8.33% (12:1) MAX.
- ◆ SLOPE 5% MIN. & 8.33% (12:1) MAX.
- ◧ 6' MINIMUM, 15' MAXIMUM
- ▲ 6' AT BACK OF CURB
- ■ BLENDED TRANSITION

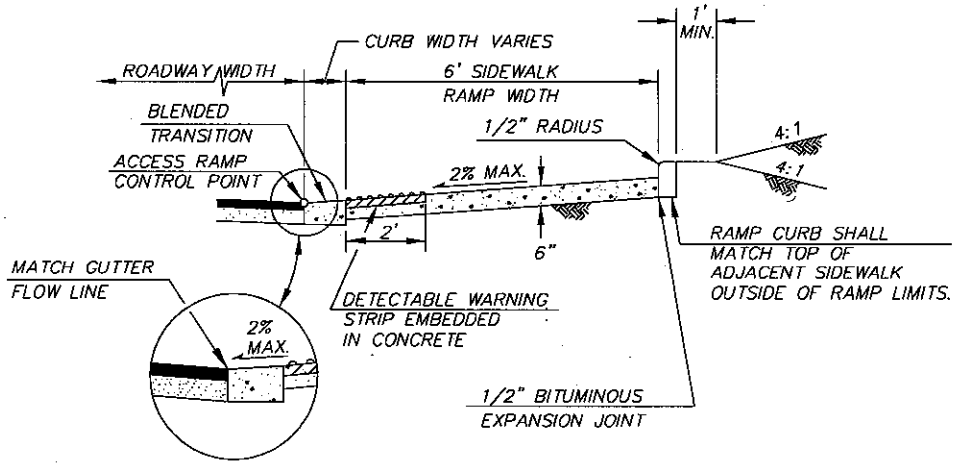

B SECTION

GENERAL NOTES:

1. SEE SHEET 10 OF 10 FOR ADDITIONAL CONSTRUCTION NOTES.
2. SEE STD. DETAIL 200 FOR JOINT REQUIREMENTS.
3. RAMP JOINTS ALONG RETURNS SHALL BE RADIAL FROM THE BACK OF CURB OR BACK OF DETECTABLE WARNING STRIP.
4. SEE PROJECT PLANS FOR RAMP LOCATION. CURB ACCESS RAMP SHALL BE ORIENTED TO ALIGN WITH THE CROSSWALK OR STOP BAR, MEDIAN REFUGE AREA, AND WITH THE OPPOSITE ACCESS RAMP IN THE DIRECTION OF PEDESTRIAN TRAVEL.
5. DRAINAGE INLETS ARE NOT PERMITTED WITHIN CROSSWALKS OR WITHIN 10' OF AN ACCESS RAMP.
6. CURB ACCESS RAMP LOCATION IS NOT RESTRICTED WITHIN CURB RADII ON LOCAL STREETS, AND RESIDENTIAL COLLECTORS WITH A MAXIMUM 2,500 VEHICLES PER DAY AND NOT ADJACENT TO A MAJOR ARTERIAL.

NOT TO SCALE

Pima Association of Governments

DETAIL NO.	STANDARD DETAIL	ISSUED:
207	CURB ACCESS RAMP (WITH PEDESTRIAN PUSH BUTTON) (TYPE 1)	4/10
SHEET 3 of 10		REVISED: 09/15

① ACCESS RAMP CONTROL POINT SEE PLANS FOR LOCATION

② DETECTABLE WARNING 6' x 2' (TYP.) SEE SHT. 10 OF 10

③ ROUGH BROOM FINISH (TYP.)

④ SEE PLANS FOR RADIUS.

⑤ BLENDED TRANSITION (TYP.)

⑥ MID-POINT OF CURB RADII (LOCATE RAMP LIMIT A MIN. 2' FROM MID-POINT)

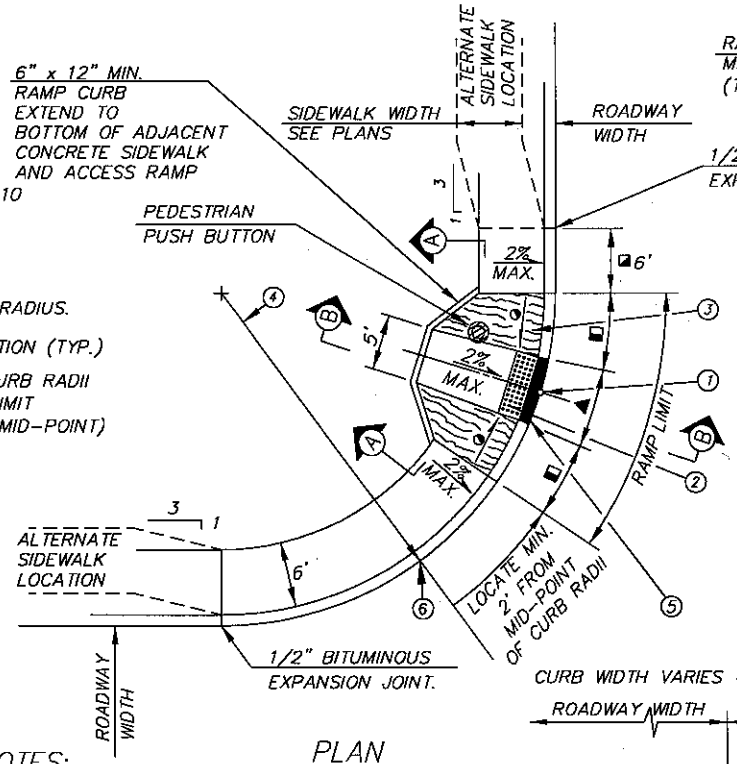

PLAN

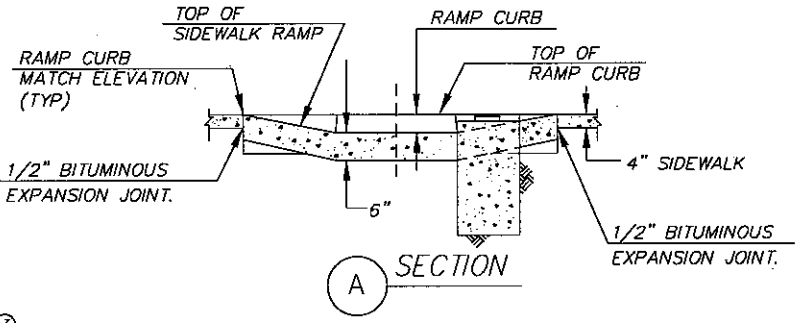

A SECTION

◪ PROVIDE MINIMUM OF 6' OF SIDEWALK ALONG CURB LINE (TYP.)

◑ SLOPE 5% MIN. & 8.33% (12:1) MAX.

◧ 6' MINIMUM, 15' MAXIMUM

▲ 6' WIDE AT BACK OF CURB

■ BLENDED TRANSITION

✳ PUSH BUTTON TO BE PLACED WITH MAXIMUM 10" REACH. SEE REACH RANGES IN A.D.A. GUIDELINES.

◆ IF TRAFFIC POLE-DIA IS 3', IF PUSH BUTTON POLE-DIA. IS 2'.

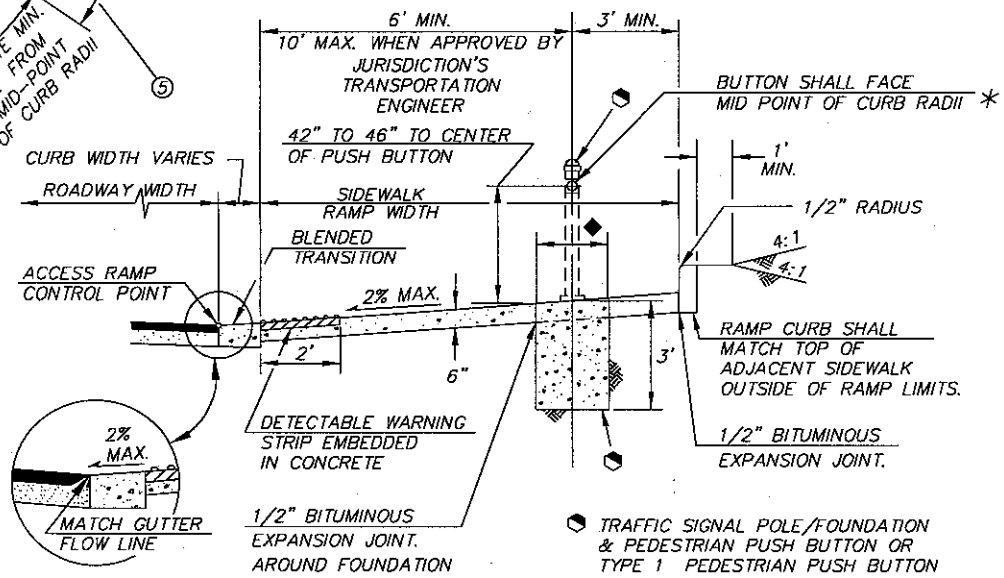

B SECTION

⬢ TRAFFIC SIGNAL POLE/FOUNDATION & PEDESTRIAN PUSH BUTTON OR TYPE 1 PEDESTRIAN PUSH BUTTON POLE/FOUNDATION & PUSH BUTTON (STD. DETAIL T419 UNLESS OTHERWISE NOTED) PLACED ONLY WHEN APPLICABLE & APPROVED BY THE JURISDICTION'S TRANSPORTATION ENGINEER. SEE TRAFFIC SIGNAL PLANS.

GENERAL NOTES:

1. SEE SHEET 10 OF 10 FOR ADDITIONAL CONSTRUCTION NOTES.
2. TRAFFIC SIGNAL POLE OR PEDESTRIAN PUSH BUTTON POLE. SEE TRAFFIC SIGNAL PLANS FOR ADDITIONAL INFORMATION.
3. SEE STD. DETAIL 200 FOR JOINT REQUIREMENTS.
4. RAMP JOINTS ALONG RETURNS SHALL BE RADIAL FROM THE BACK OF CURB OR BACK OF DETECTABLE WARNING STRIP.
5. SEE PROJECT PLANS FOR RAMP LOCATION. CURB ACCESS RAMP SHALL BE ORIENTED TO ALIGN WITH THE CROSSWALK OR STOP BAR, MEDIAN REFUGE AREA, AND WITH THE OPPOSITE ACCESS RAMP IN THE DIRECTION OF PEDESTRIAN TRAVEL.
6. DRAINAGE INLETS ARE NOT PERMITTED WITHIN CROSSWALKS OR WITHIN 10' OF AN ACCESS RAMP.

NOT TO SCALE

Pima Association of Governments

DETAIL NO. 207

SHEET 4 of 10

STANDARD DETAIL

CURB ACCESS RAMP
(DUAL RAMP CONFIGURATION)
(WITH PEDESTRIAN PUSH BUTTON)
(TYPE 1)

ISSUED: 4/10

REVISED: 09/15

1. ACCESS RAMP CONTROL POINT. (SEE PLANS FOR LOCATION (TYP.))
2. DETECTABLE WARNING STRIP 6' x 2' (TYP.) SEE SHT. 10 OF 10
3. ROUGH BROOM FINISH (TYP.)
4. SEE PLANS FOR RADIUS
5. BLENDED TRANSITION (TYP.)
6. MID-POINT CURB RADII. (LOCATE RAMP LIMIT A MIN. 2' FROM MID-POINT (TYP.))

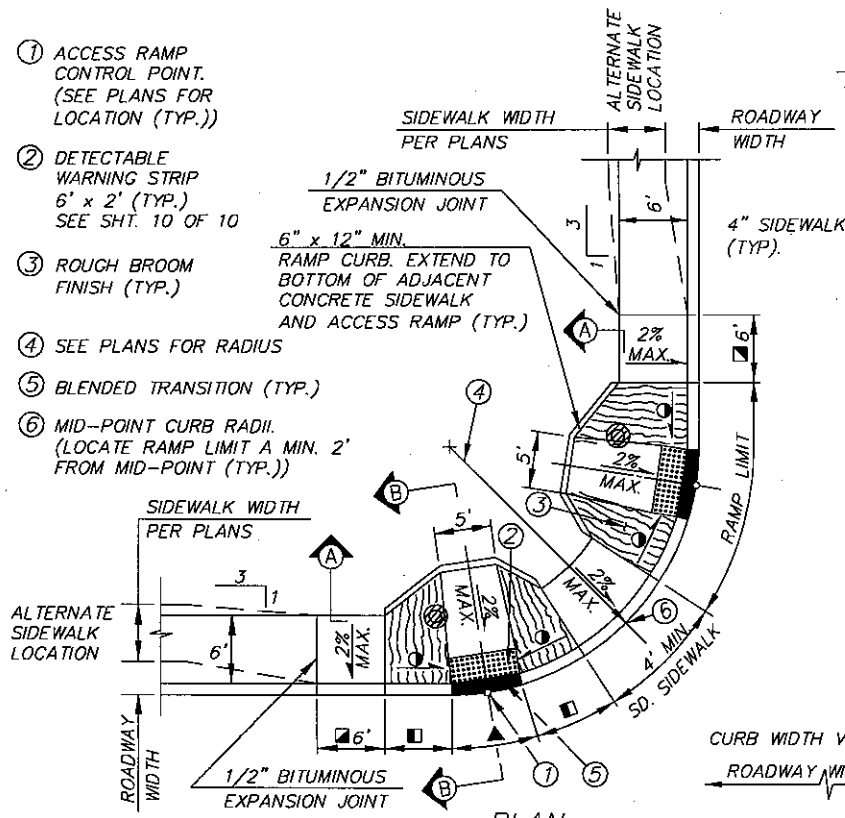

PLAN

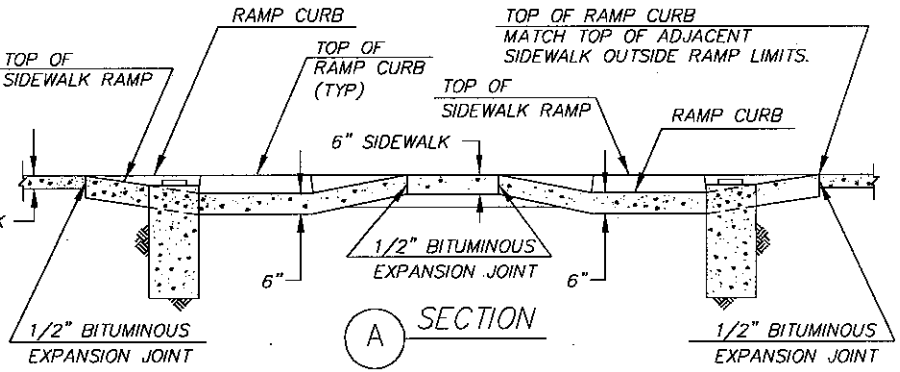

A SECTION

◪ PROVIDE MINIMUM OF 6' OF SIDEWALK ALONG CURB LINE (TYP.)

◑ SLOPE 5% MIN. & 8.33% (12:1) MAX.

◧ 6' MINIMUM, 15' MAXIMUM

▲ 6' AT BACK OF CURB

■ BLENDED TRANSITION

✳ PUSH BUTTON TO BE PLACED WITH MAXIMUM 10" REACH. SEE REACH RANGES IN A.D.A. GUIDELINES

◆ IF TRAFFIC POLE – DIA. IS 3', IF PUSH BUTTON POLE – DIA. IS 2'.

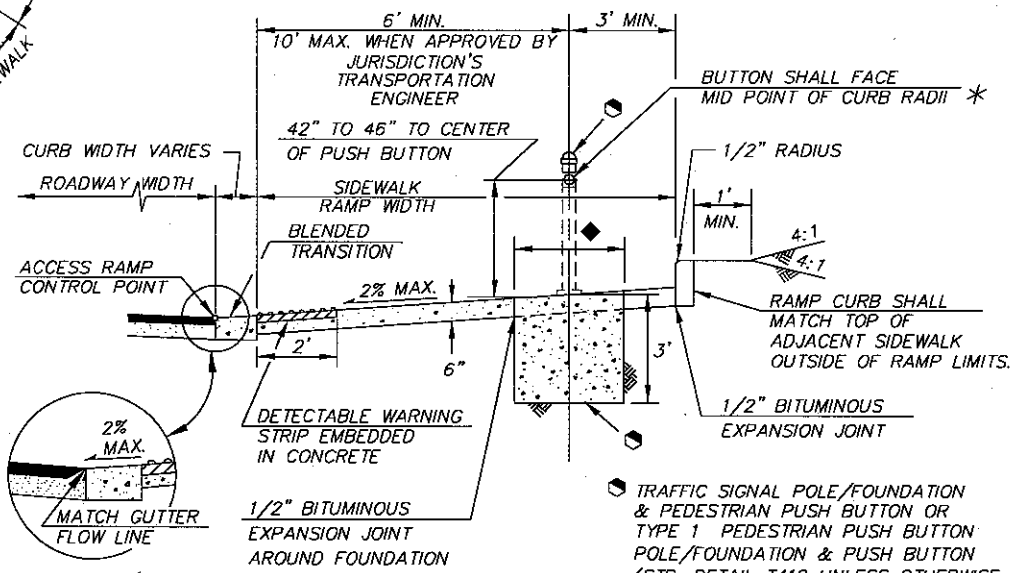

B SECTION

⬢ TRAFFIC SIGNAL POLE/FOUNDATION & PEDESTRIAN PUSH BUTTON OR TYPE 1 PEDESTRIAN PUSH BUTTON POLE/FOUNDATION & PUSH BUTTON (STD. DETAIL T419 UNLESS OTHERWISE NOTED) PLACED ONLY WHEN APPLICABLE & APPROVED BY THE JURISDICTION'S TRANSPORTATION ENGINEER. SEE TRAFFIC SIGNAL PLANS.

GENERAL NOTES:

1. SEE SHEET 10 OF 10 FOR ADDITIONAL CONSTRUCTION NOTES.
2. TRAFFIC SIGNAL POLE OR PEDESTRIAN PUSH BUTTON POLE. SEE TRAFFIC SIGNAL PLANS FOR ADDITIONAL INFORMATION.
3. SEE STD. DETAIL 200 FOR JOINT REQUIREMENTS.
4. RAMP JOINTS ALONG RETURNS SHALL BE RADIAL FROM THE BACK OF CURB OR BACK OF DETECTABLE WARNING STRIP.
5. SEE PROJECT PLANS FOR RAMP LOCATION. CURB ACCESS RAMP SHALL BE ORIENTED TO ALIGN WITH THE CROSSWALK OR STOP BAR, MEDIAN REFUGE AREA, AND WITH THE OPPOSITE ACCESS RAMP IN THE DIRECTION OF PEDESTRIAN TRAVEL.
6. DRAINAGE INLETS ARE NOT PERMITTED WITHIN CROSSWALKS OR WITHIN 10' OF AN ACCESS RAMP.
7. FOR USE AT THE INTERSECTION OF TWO MAJOR ARTERIAL ROADWAYS.

NOT TO SCALE

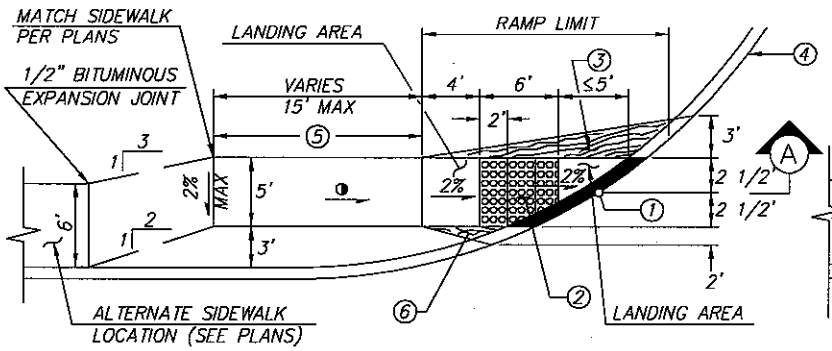

40' RADIUS RETURN

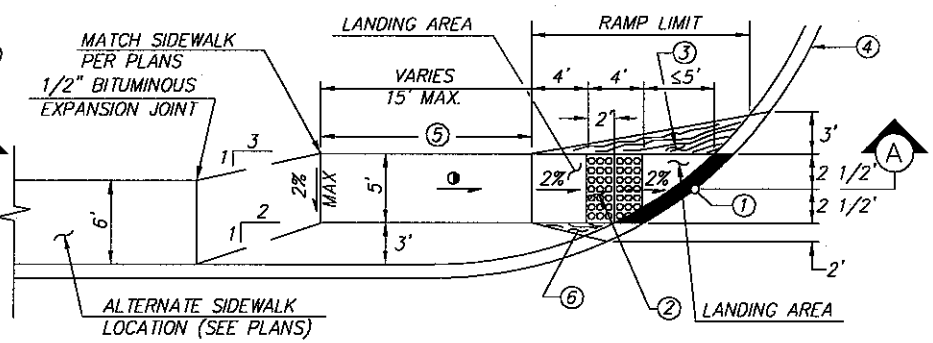

25' & 30' RADIUS RETURN

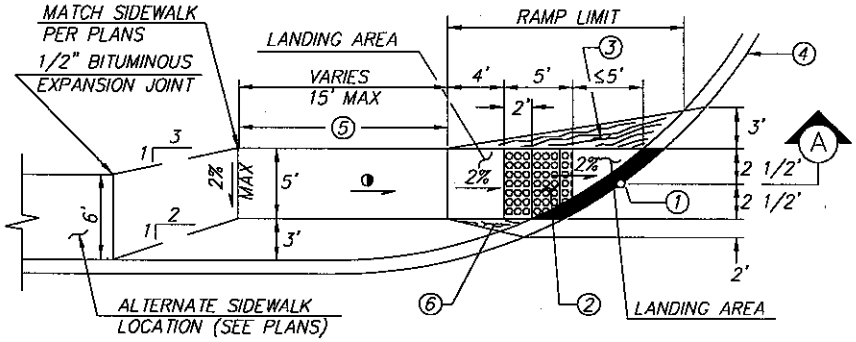

35' RADIUS RETURN

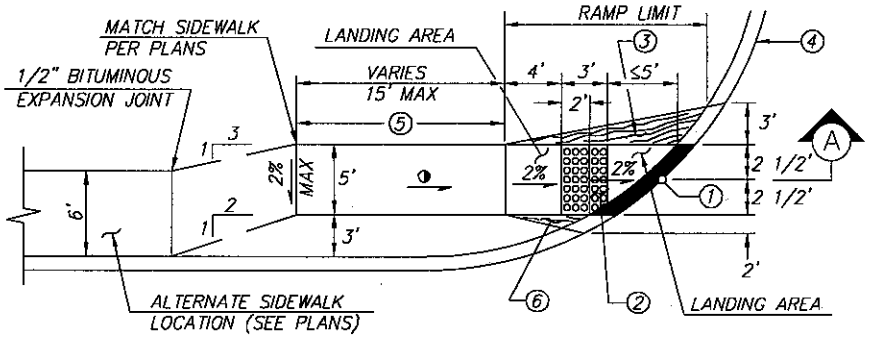

< 25' RADIUS RETURN

◑ SLOPE: 5% MIN. AND 8.33% (12:1) MAX.

■ BLENDED TRANSITION.

① ACCESS RAMP CONTROL POINT. SEE PLANS FOR LOCATION. (SIDEWALK MID-POINT).

② DETECTABLE WARNING STRIP. FOR LENGTH SEE DETAILS ABOVE.

③ ROUGH BROOM FINISH. 1/4" DEEP SCORED JOINT SHALL BE PLACED PERPENDICULAR TO DIRECTION OF TRAVEL AT THE MIDWAY POINT OF ACCESS RAMP LENGTH.

④ SEE PLANS FOR RADIUS.

⑤ TRANSITION GRADING TO MATCH TYPICAL SECTION.

⑥ ROUGH BROOM FINISH.

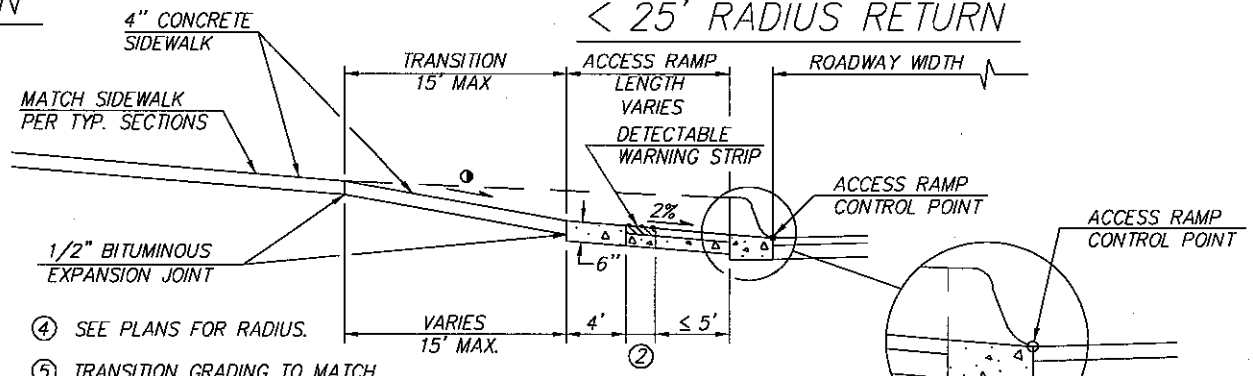

(A) SECTION

NOT TO SCALE

Pima Association of Governments

DETAIL NO. 207

SHEET 5 of 10

STANDARD DETAIL

CURB ACCESS RAMP (DIRECTIONAL) (TYPE 2)

ISSUED: 5/11

REVISED: 09/15

Pima Association of Governments

DETAIL NO. 207

SHEET 6 of 10

STANDARD DETAIL

CURB ACCESS RAMP (MID BLOCK) (TYPE 3)

ISSUED: 05/10

REVISED: 09/15

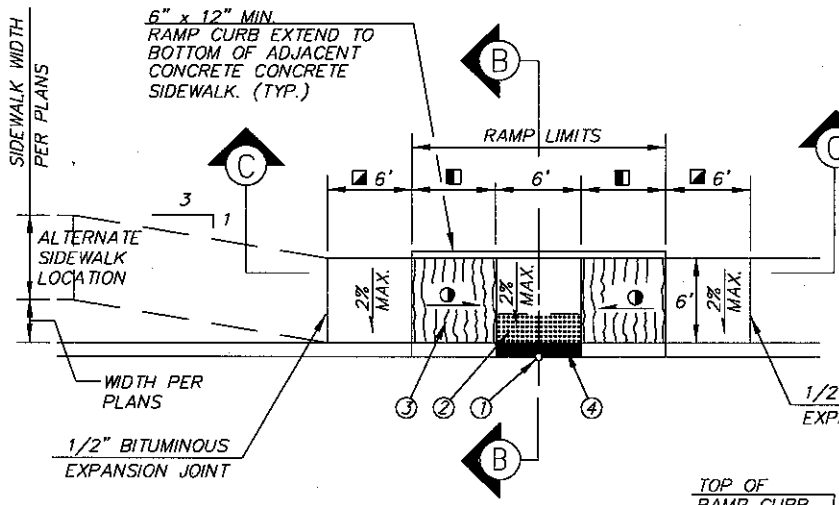

PLAN

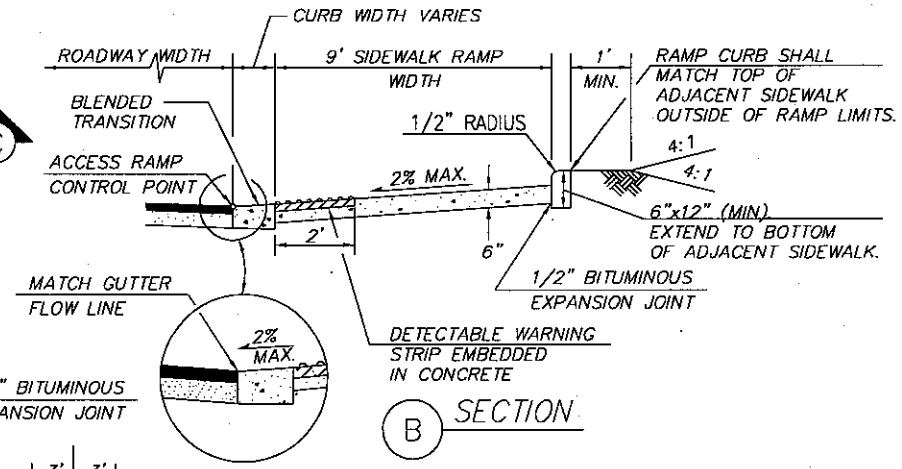

B SECTION

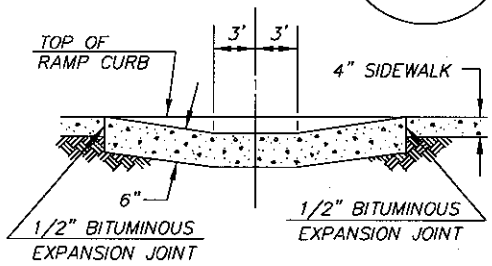

C SECTION

- ■ BLENDED TRANSITION
- ◪ PROVIDE MINIMUM OF 6' OF SIDEWALK ALONG CURB LINE (TYP.)
- ◑ SLOPE 5% MIN. & 8.33% (12:1) MAX.
- ◧ 6' MINIMUM, 15' MAXIMUM
- ◆ IF TRAFFIC POLE – DIA. IS 3', IF PUSH BUTTON POLE – DIA. IS 2'
- ① ACCESS RAMP CONTROL POINT. SEE PLANS FOR LOCATION (TYP.)
- ② DETECTABLE WARNING STRIP 6' x 2' (TYP.) SEE SHT. 10 OF 10
- ③ ROUGH BROOM FINISH, (TYP.)
- ④ BLENDED TRANSITION

GENERAL NOTES:

1. SEE SHEET 10 OF 10 FOR ADDITIONAL CONSTRUCTION NOTES.
2. SEE STD. DETAIL 200 FOR JOINT REQUIREMENTS.
3. DRAINAGE INLETS ARE NOT PERMITTED WITHIN CROSSWALKS OR WITHIN 10' OF AN ACCESS RAMP.
4. SEE PROJECT PLANS FOR RAMP LOCATION. CURB ACCESS RAMP SHOULD BE ORIENTED TO ALIGN WITH THE CROSSWALK OR STOP BAR, MEDIAN REFUGE AREA, AND WITH THE OPPOSITE ACCESS RAMP IN THE DIRECTION OF PEDESTRIAN TRAVEL.

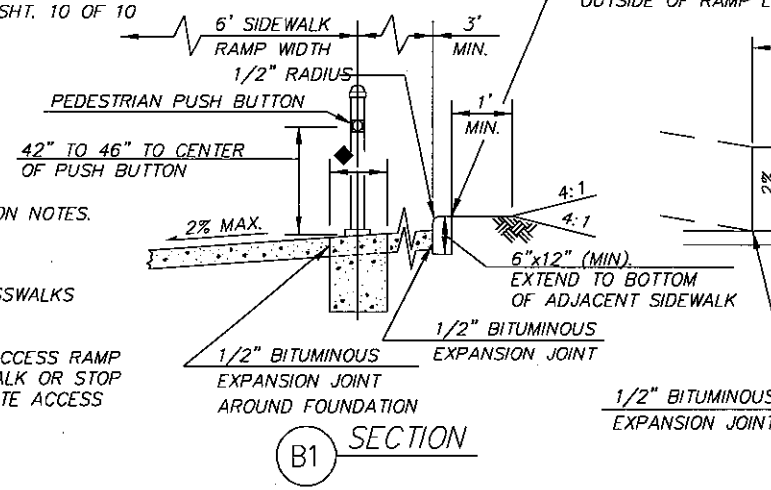

B1 SECTION

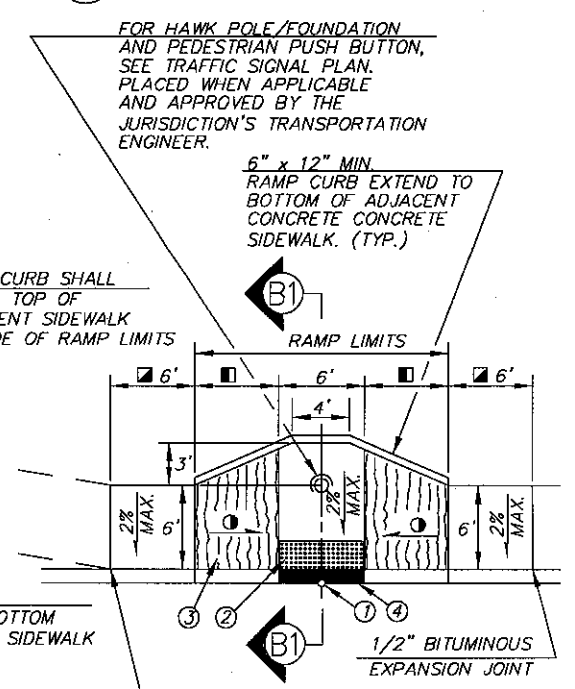

PLAN FOR HAWK CROSSING

NOT TO SCALE

Pima Association of Governments

① ACCESS RAMP CONTROL POINT. (SEE PLANS FOR LOCATION (TYP.))

② DETECTABLE WARNING STRIP 5'x 2' (TYP.) SEE SHT. 10 OF 10

③ ROUGH BROOM FINISH (TYP.)

④ SEE PLANS FOR RADIUS

⑤ BLENDED TRANSITION (TYP.)

⑥ MID-POINT CURB RADII. OFFSET FROM MID-POINT IS ALLOWED.

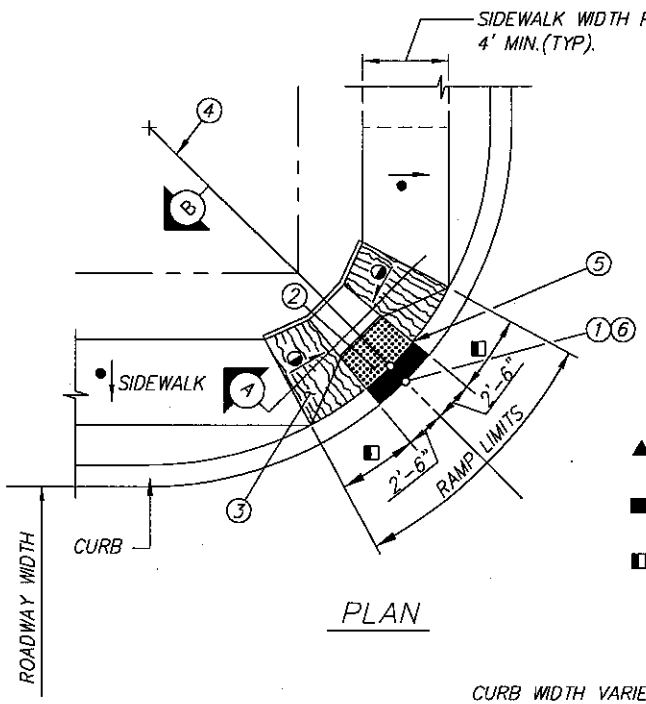

PLAN

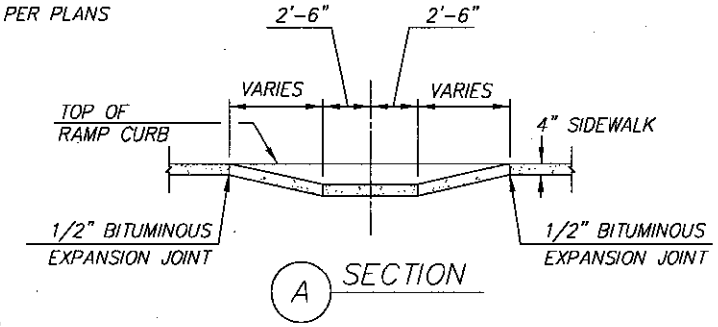

A SECTION

▲ 6' AT BACK OF CURB

■ BLENDED TRANSITION

◧ 6' MINIMUM, 15' MAXIMUM

◑ SLOPE 5% MIN. & 8.33% (12:1) MAX.

CROSS SLOPE 2% MAX.

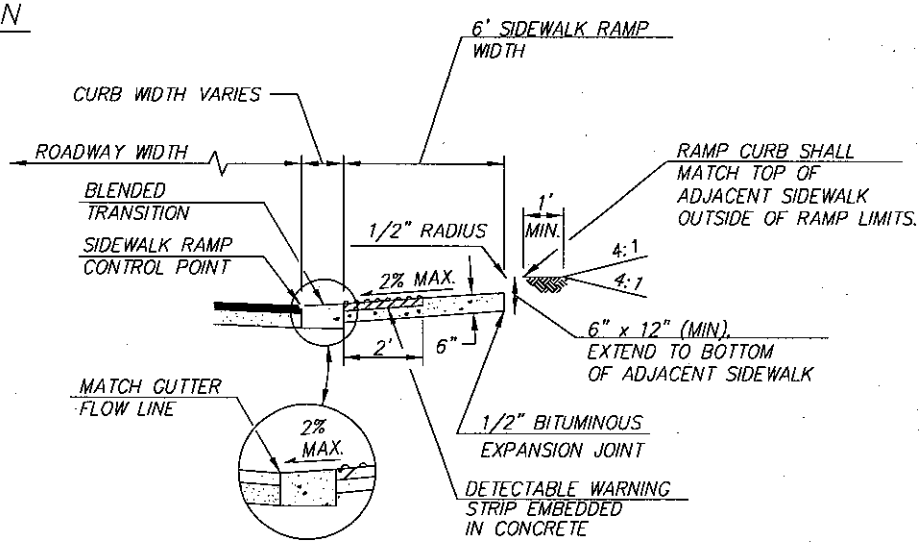

B SECTION

NOT TO SCALE

GENERAL NOTES:

1. FOR USE ONLY WITHIN LOCAL STREETS AND RESIDENTIAL COLLECTORS WITH A MAXIMUM 2,500 VEHICLES PER DAY AND NOT ADJACENT TO A MAJOR ARTERIAL.
2. SEE SHEET 10 OF 10 FOR ADDITIONAL CONSTRUCTION NOTES.
3. SEE STD. DETAIL 200 FOR JOINT REQUIREMENTS.
4. RAMP JOINTS ALONG RETURNS SHALL BE RADIAL FROM THE BACK OF CURB OR BACK OF DETECTABLE WARNING STRIP.
5. SEE PROJECT PLANS FOR RAMP LOCATION.
6. DRAINAGE INLETS ARE NOT PERMITTED WITHIN CROSSWALKS OR WITHIN 10' OF AN ACCESS RAMP.

DETAIL NO.	STANDARD DETAIL	ISSUED: 10/88
207	CURB ACCESS RAMP (TYPE 4)	REVISED: 09/15
SHEET 7 of 10		

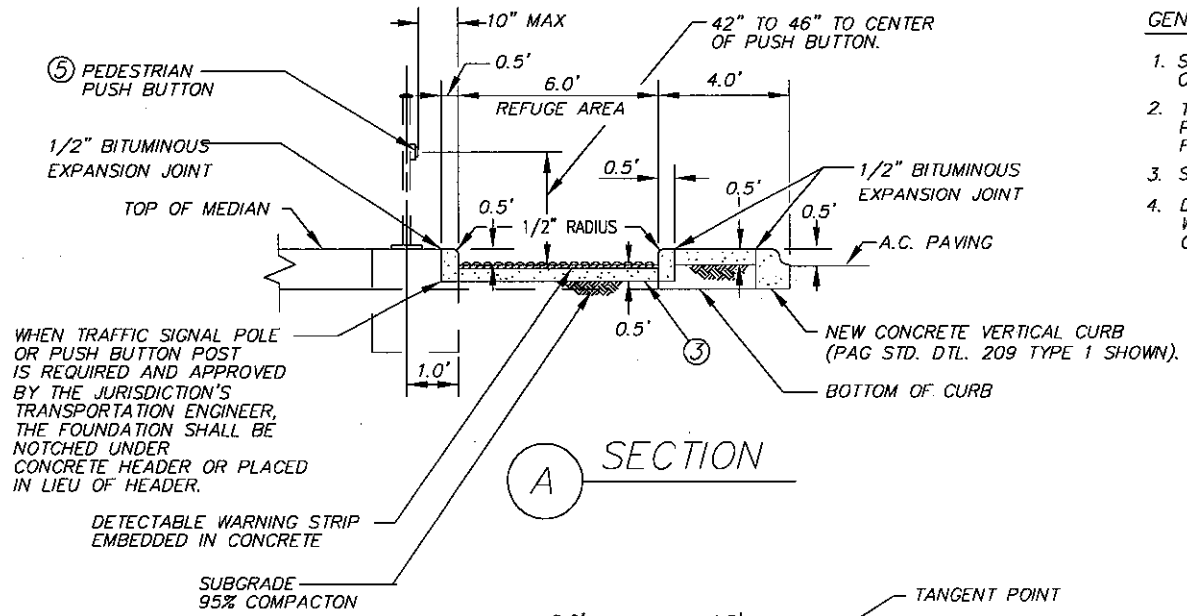

A SECTION

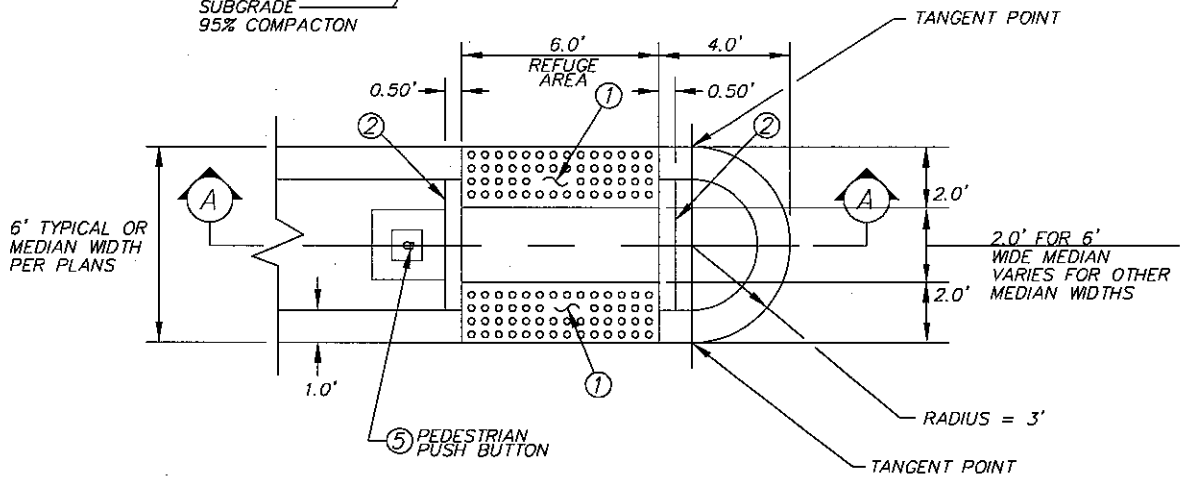

TYPE 1 MEDIAN NOSE

GENERAL NOTES:

1. SEE SHEET 10 OF 10 FOR ADDITIONAL CONSTRUCTION NOTES.
2. TRAFFIC SIGNAL POLE OR TYPE 1 PEDESTRIAN PUSH BUTTON POLE. SEE TRAFFIC SIGNAL PLANS FOR ADDITIONAL INFORMATION.
3. SEE STD. DETAIL 200 FOR JOINT REQUIREMENTS.
4. DRAINAGE INLETS ARE NOT PERMITTED WITHIN CROSSWALKS OR WITHIN 10' OF ACCESS RAMPS.

① DETECTABLE WARNING STRIP 6' x 2' (TYP.) SEE SHT. 10 of 10

② 6" x 12" CONCRETE HEADER PER PC/DOT STD. DTL. 213 WITH A 2" RADIUS ON INSIDE EDGE.

③ 6" CLASS "B" CONCRETE WITHIN REFUGE AREA.

④ TYPE 1 PAY LIMITS INCLUDES ①, ② & ③

⑤ TRAFFIC SIGNAL POLE/FOUNDATION OR TYPE 1 PEDESTRIAN PUSH BUTTON POLE/FOUNDATION (STD. DETAIL T419 UNLESS OTHERWISE NOTED). WHEN APPLICABLE AND APPROVED BY THE JURISDICTION'S TRANSPORTATION ENGINEER. SEE TRAFFIC SIGNAL PLANS FOR ADDITIONAL INFORMATION.

NOT TO SCALE

Pima Association of Governments

DETAIL NO. 207

SHEET 8 of 10

STANDARD DETAIL

CURB ACCESS RAMP (MEDIAN REFUGE AREA) (TYPE 1)

ISSUED: 4/10

REVISED: 09/15

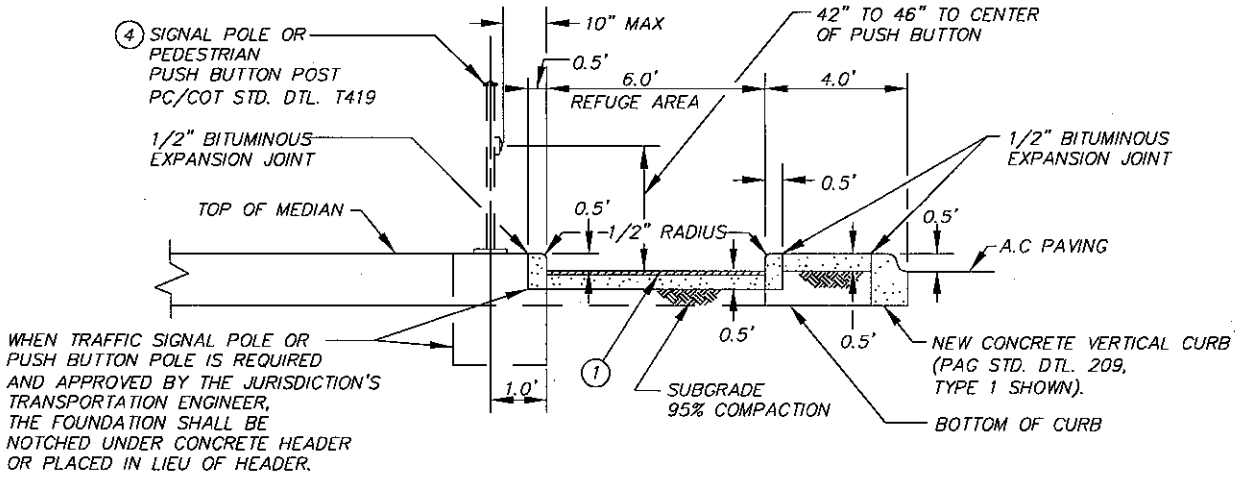

(A) SECTION

GENERAL NOTES:

1. SEE SHEET 10 OF 10 FOR ADDITIONAL CONSTRUCTION NOTES.
2. TRAFFIC SIGNAL POLE OR TYPE 1 PEDESTRIAN PUSH BUTTON POLE. SEE TRAFFIC SIGNAL PLANS FOR ADDITIONAL INFORMATION.
3. SEE STD. DETAIL 200 FOR JOINT REQUIREMENTS.
4. DRAINAGE INLETS ARE NOT PERMITTED WITHIN CROSSWALKS OR WITHIN 10' OF ACCESS RAMP.
5. MEDIANS 14' OR WIDER REQUIRE DETECTABLE WARNING STRIPS WITHIN THE REFUGE AREA IN ACCORDANCE WITH ADA.

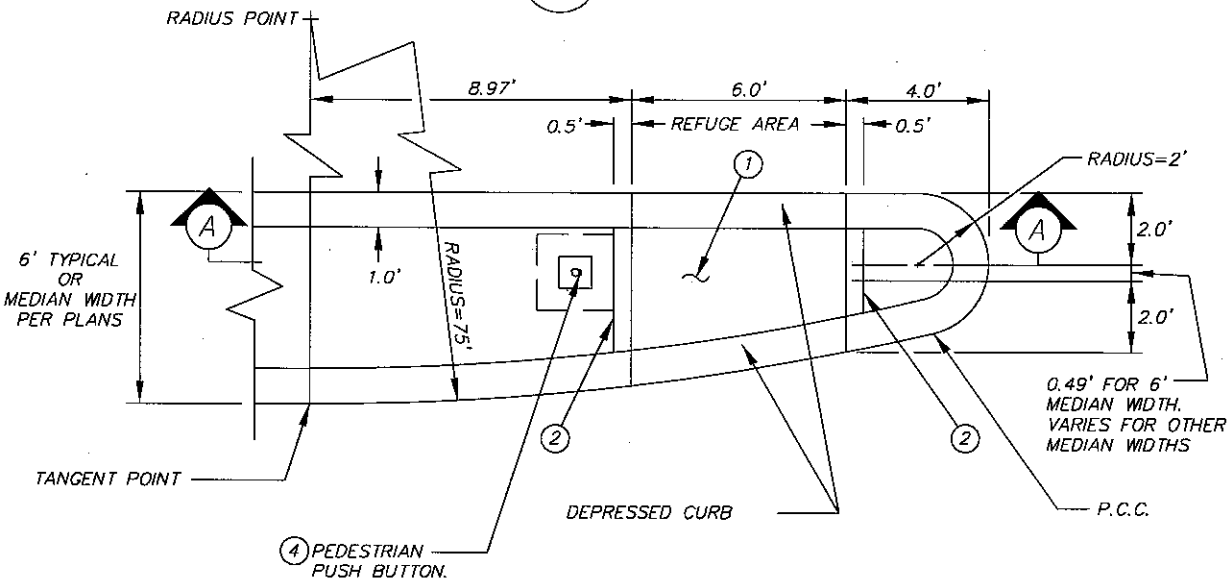

(1) 6" CLASS B CONCRETE WITHIN REFUGE AREA WITH A ROUGH BROOM FINISH.

(2) 6" x 12" CONCRETE HEADER PER PC/COT STD. DTL. 213 WITH A 1/2" RADIUS INSIDE EDGE.

(3) TYPE 2 PAY LIMITS INCLUDES (1) & (2).

(4) TRAFFIC SIGNAL POLE/FOUNDATION OR TYPE 1 PEDESTRIAN PUSH BUTTON POLE/FOUNDATION (STD DETAIL T419 UNLESS OTHERWISE NOTED) WHEN APPLICABLE & APPROVED BY THE JURISDICTION'S TRANSPORTATION ENGINEER. SEE TRAFFIC SIGNAL PLANS FOR ADDITIONAL INFORMATION.

TYPE 2 MEDIAN NOSE

NOT TO SCALE

Pima Association of Governments

DETAIL NO.	207
STANDARD DETAIL	CURB ACCESS RAMP (MEDIAN REFUGE AREA) (TYPE 2)
ISSUED:	4/10
REVISED:	09/15

SHEET 9 of 10

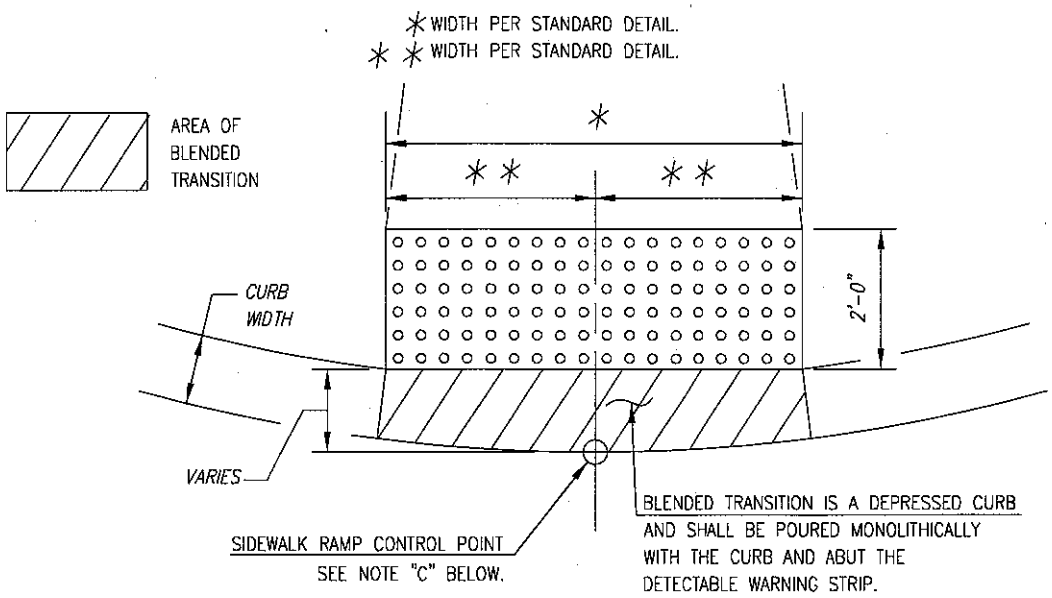

DETECTABLE WARNING STRIP PLAN

CONSTRUCTION NOTES:

(A) SEE STD. DETAIL 200 FOR JOINT REQUIREMENTS.

(B) RAMP SHALL BE LAID OUT RADIALLY FROM THE BACK OF THE DETECTABLE WARNING STRIP FOR TYPE 1 AND TYPE 4 CURB ACCESS RAMPS.

(C) SEE PROJECT PLANS FOR RAMP LOCATION. CURB ACCESS RAMPS SHOULD BE ORIENTED TO ALIGN WITH THE CROSSWALK, MEDIAN REFUGE AREA, AND WITH THE OPPOSITE ACCESS RAMPS IN THE DIRECTION OF PEDESTRIAN TRAVEL.

(D) DRAINAGE INLETS ARE NOT PERMITTED WITHIN CROSSWALKS OR WITHIN 10' OF AN ACCESS RAMP.

NOTES FOR DETECTABLE WARNING SURFACE:

1. DETECTABLE WARNINGS SHALL BE EMBEDDED IN CONCRETE, AND SHALL CONSIST OF A SURFACE OF TRUNCATED DOMES ALIGNED IN A SQUARE OR RADIAL GRID PATTERN IN THE DIRECTION OF TRAVEL, AND SHALL COMPLY WITH R304 OF ACCESSIBILITY GUIDE LINES FOR PEDESTRIAN FACILITIES IN THE PUBLIC RIGHT OF WAY.

2. DOME SIZE: TRUNCATED DOMES IN A DETECTABLE WARNING SURFACE SHALL HAVE A BASE DIAMETER OF 0.9 IN. MINIMUM TO 1.4 IN. MAXIMUM, A TOP DIAMETER OF 50 PERCENT OF THE BASE DIAMETER MINIMUM TO 65 PERCENT OF THE BASE DIAMETER MAXIMUM, AND A HEIGHT OF 0.2 IN.

3. DOME SPACING: TRUNCATED DOMES IN A DETECTABLE WARNING SURFACE SHALL HAVE A CENTER TO CENTER SPACING OF 1.6 IN. MINIMUM AND 2.4 IN. MAXIMUM, AND A BASE TO BASE SPACING OF 0.65 IN. MINIMUM MEASURED BETWEEN THE MOST ADJACENT DOMES.

4. COLOR CONTRAST: DETECTABLE WARNING SURFACES SHALL CONTRAST VISUALLY WITH ADJACENT GUTTER, STREET OR HIGHWAY, OR PEDESTRIAN ACCESS ROUTE SURFACE, EITHER LIGHT-ON-DARK OR DARK-ON-LIGHT.

5. SIZE: DETECTABLE WARNING SURFACES SHALL EXTEND 24 IN. MINIMUM IN THE DIRECTION OF TRAVEL AND THE FULL WIDTH OF THE CURB RAMP (EXCLUSIVE OF FLARES), THE LANDING, OR THE BLENDED TRANSITION.

6. PREFABRICATED DETECTABLE WARNING STRIP PANELS SHALL BE UTILIZED FOR BOTH NEW CONSTRUCTION AND RETROFIT INSTALLATIONS. SURFACE APPLICATIONS DEPENDENT ON AN ADHESIVE BONDING AGENT(S) AND ANCHORED SYSTEMS ARE NOT APPROVED FOR USE.

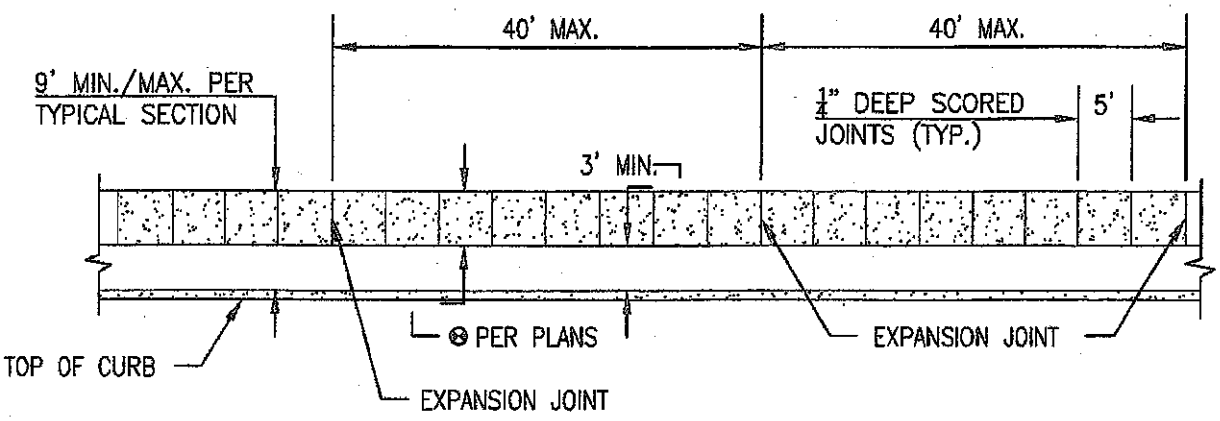

PLAN VIEW

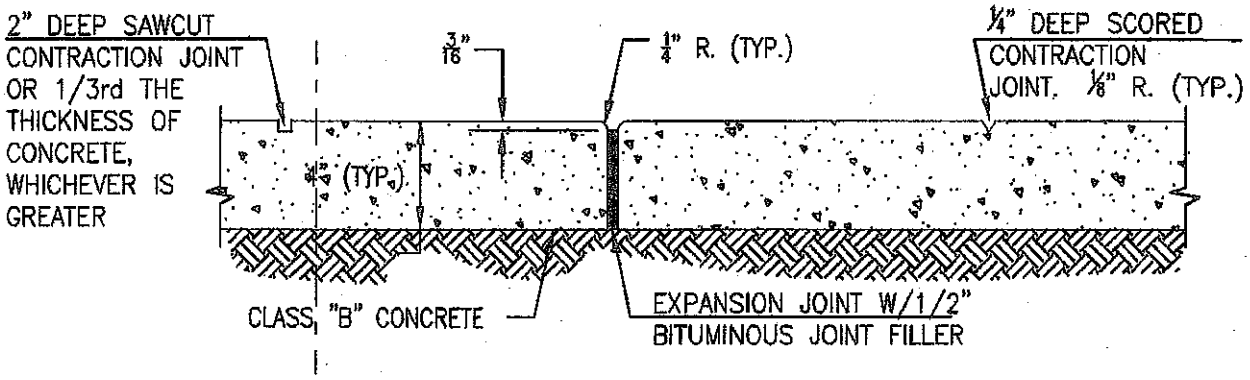

EXPANSION AND CONTRACTION JOINT DETAIL

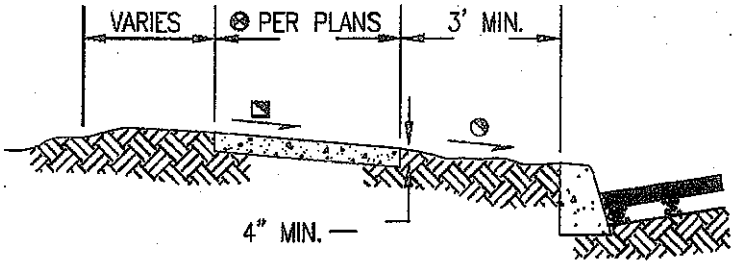

TYPICAL SECTION

▨ 1% MIN.
2% MAX.

⊘ 1% MIN.
2% MAX.

⊗ 4' – LOCAL STREETS. SCORED JOINT SPACING AT 5'.

5' – LOCAL STREETS WHEN SIDEWALK ABUTS BACK OF CURB. SCORED JOINT SPACING AT 5'.

5' – ARTERIAL AND COLLECTOR STREETS. SCORED JOINT SPACING AT 5'.

6' – ARTERIALS AND COLLECTORS WHEN SIDEWALK ABUTS BACK OF CURB. SCORED JOINT SPACING AT 5'.

	DETAIL NO.	STANDARD DETAIL	ISSUED:
PAG Pima Association of Governments	200	CONCRETE SIDEWALK	10/88
	SHEET 1 of 2		REVISED: 9/12

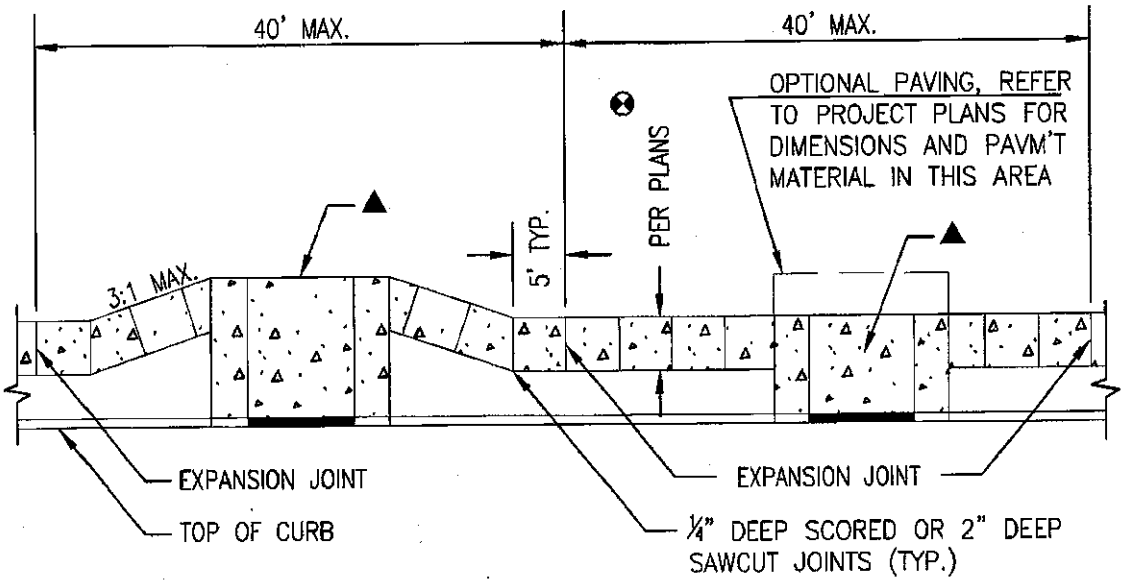

PLAN VIEW

▲ DRIVEWAY APRON PER STD. DTL. 206.

NOTES:

1. EXPANSION JOINTS SHALL BE LOCATED WHERE SIDEWALK ABUTS CONCRETE DRIVEWAYS, CURB OR OTHER ADJACENT STRUCTURES.
2. ½" BITUMINOUS JOINT FILLER SHALL BE INSTALLED AT EXPANSION JOINT LOCATIONS AND SHALL EXTEND THE FULL DEPTH OF THE CONCRETE.
3. CONTRACTION JOINTS SHALL BE PLACED AT INTERVALS OF APPROXIMATELY 10 FEET OR AT A SPACING THAT MATCHES THE ADJACENT CURB.
4. FORMED CONTRACTION JOINTS SHALL BE FINISHED WITH A TOOL HAVING A ¼" INCH RADIUS.
5. SCORED JOINTS SHALL BE ¼" DEEP AND PLACED AT THE SPACING INDICATED FOR THE WIDTH OF SIDEWALK OR MATCH SCORED JOINTS OF ADJACENT CURB.
6. CONCRETE SHALL BE FINISHED BY MEANS OF A FLOAT, STEEL TROWELLED AND BROOMED WITH A FINE BRUSH IN A TRANSVERSE DIRECTION TO PEDESTRIAN TRAVEL.

❷ 4' – LOCAL STREETS. SCORED JOINT SPACING AT 5'.

5' – LOCAL STREETS WHEN SIDEWALK ABUTS BACK OF CURB. SCORED JOINT SPACING AT 5'.

5' – ARTERIAL AND COLLECTOR STREETS. SCORED JOINT SPACING AT 5'.

6' – ARTERIALS AND COLLECTORS WHEN SIDEWALK ABUTS BACK OF CURB. SCORED JOINT SPACING AT 5'.

	DETAIL NO.	STANDARD DETAIL	ISSUED:
PAG Pinellas Association of Governments	200	CONCRETE SIDEWALK	10/88
			REVISED:
	SHEET 2 of 2		9/12

(ATTACHMENT 6) (5 pages)

F.A.P.A. REGION	STATE	PROJECT NO.	SHEET NO.	TOTAL SHEETS	AS BUILT
9	ARIZ.	PPM 0 (237)0	3	35	
		PPM 0 (204)0			

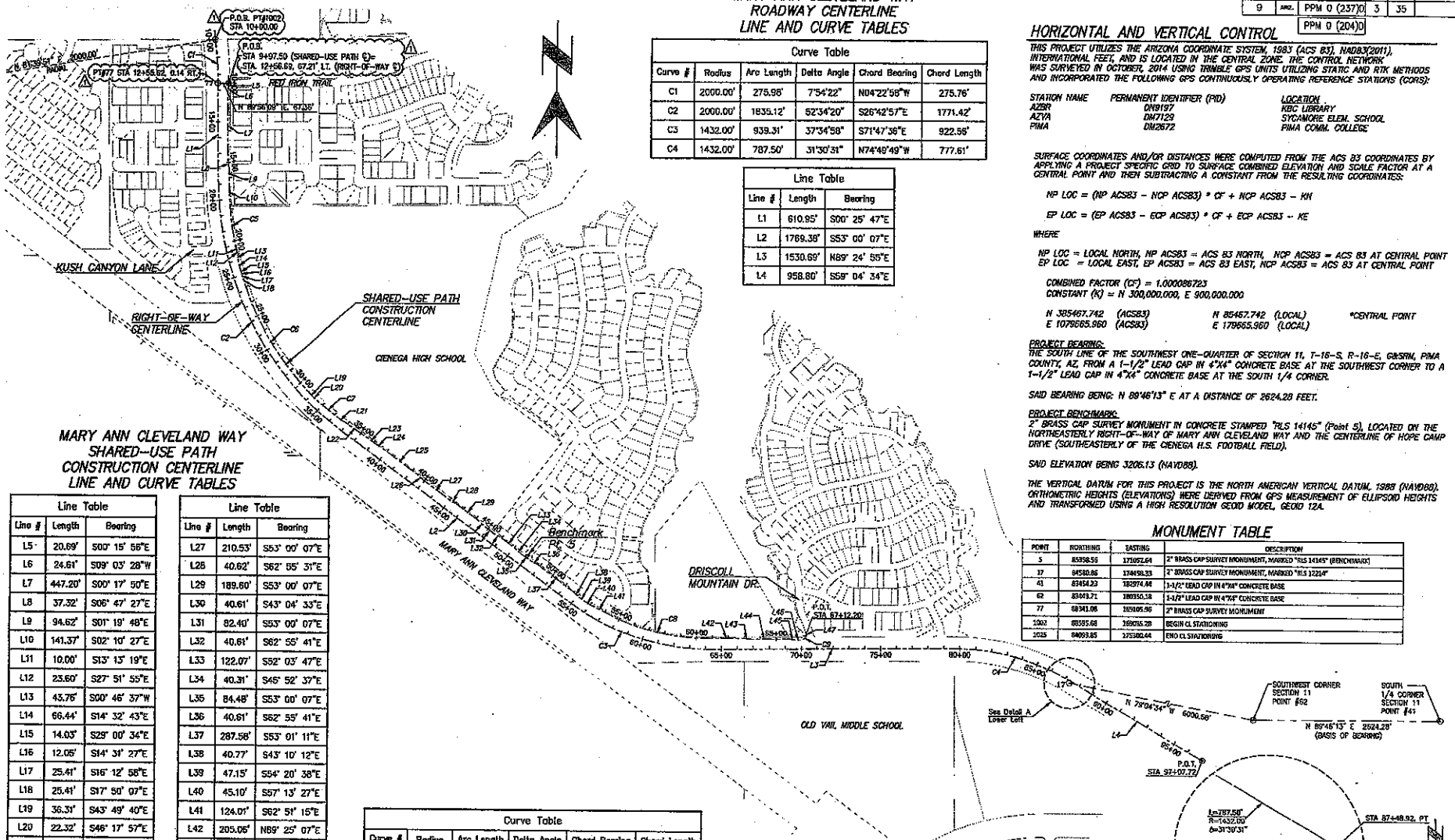

MARY ANN CLEVELAND WAY ROADWAY CENTERLINE LINE AND CURVE TABLES

Curve Table					
Curve #	Radius	Arc Length	Delta Angle	Chord Bearing	Chord Length
C1	2000.00'	275.98'	7°54'22"	N04°22'58"W	275.76'
C2	2000.00'	1835.12'	52°34'20"	S26°42'57"E	1771.42'
C3	1432.00'	939.31'	37°34'58"	S71°47'36"E	922.56'
C4	1432.00'	787.50'	31°30'31"	N74°49'49"W	777.61'

Line Table		
Line #	Length	Bearing
L1	610.95'	S00° 25' 47"E
L2	1769.38'	S53° 00' 07"E
L3	1530.69'	N89° 24' 55"E
L4	958.80'	S59° 04' 34"E

MARY ANN CLEVELAND WAY SHARED-USE PATH CONSTRUCTION CENTERLINE LINE AND CURVE TABLES

Line Table		
Line #	Length	Bearing
L5	20.69'	S00° 15' 56"E
L6	24.61'	S09° 03' 28"W
L7	447.20'	S00° 17' 50"E
L8	37.32'	S06° 47' 27"E
L9	94.62'	S01° 19' 48"E
L10	141.37'	S02° 10' 27"E
L11	10.00'	S13° 13' 19"E
L12	23.60'	S27° 51' 55"E
L13	43.76'	S00° 46' 37"W
L14	66.44'	S14° 32' 43"E
L15	14.03'	S29° 00' 34"E
L16	12.05'	S14° 31' 27"E
L17	25.41'	S16° 12' 58"E
L18	25.41'	S17° 50' 07"E
L19	36.31'	S43° 49' 40"E
L20	22.32'	S46° 17' 57"E
L21	5.75'	S52° 39' 40"E
L22	192.26'	S56° 06' 17"E
L23	71.87'	S52° 54' 55"E
L24	39.97'	S57° 56' 57"E
L25	291.83'	S52° 59' 26"E
L26	40.61'	S43° 04' 33"E

Line Table		
Line #	Length	Bearing
L27	210.53'	S53° 00' 07"E
L28	40.62'	S62° 55' 31"E
L29	189.60'	S53° 00' 07"E
L30	40.61'	S43° 04' 33"E
L31	82.40'	S53° 00' 07"E
L32	40.61'	S62° 55' 41"E
L33	122.07'	S52° 03' 47"E
L34	40.31'	S46° 52' 37"E
L35	84.48'	S53° 00' 07"E
L36	40.61'	S62° 55' 41"E
L37	287.58'	S53° 01' 11"E
L38	40.77'	S43° 10' 12"E
L39	47.15'	S54° 20' 38"E
L40	45.10'	S57° 13' 27"E
L41	124.01'	S62° 51' 15"E
L42	205.06'	N89° 25' 07"E
L43	46.82'	S84° 27' 04"E
L44	247.81'	N89° 25' 07"E
L45	31.01'	S79° 02' 40"E
L46	43.36'	N89° 20' 59"E
L47	0.58'	N07° 43' 04"W

Curve Table					
Curve #	Radius	Arc Length	Delta Angle	Chord Bearing	Chord Length
C5	1500.00'	289.23'	11°02'52"	S07°41'53"E	288.78'
C6	1798.00'	815.67'	25°59'33"	S30°49'54"E	808.69'
C7	1798.00'	199.64'	6°21'43"	S49°28'49"E	199.54'
C8	1362.00'	659.12'	27°43'38"	S76°43'04"E	652.70'
C9	31.00'	52.52'	97°04'03"	N40°48'57"E	46.46'

HORIZONTAL AND VERTICAL CONTROL

THIS PROJECT UTILIZES THE ARIZONA COORDINATE SYSTEM, 1983 (ACS 83), NAD83(2011), INTERNATIONAL FEET, AND IS LOCATED IN THE CENTRAL ZONE. THE CONTROL NETWORK WAS SURVEYED IN OCTOBER, 2014 USING TRIMBLE GPS UNITS UTILIZING STATIC AND RTK METHODS AND INCORPORATED THE FOLLOWING GPS CONTINUOUSLY OPERATING REFERENCE STATIONS (CORS):

STATION NAME	PERMANENT IDENTIFIER (PID)	LOCATION
AZBR	DN9197	KBC LIBRARY
AZVA	DM7129	SYCAMORE ELEM. SCHOOL
PIMA	DM2672	PIMA COMM. COLLEGE

SURFACE COORDINATES AND/OR DISTANCES WERE COMPUTED FROM THE ACS 83 COORDINATES BY APPLYING A PROJECT SPECIFIC GRID TO SURFACE COMBINED ELEVATION AND SCALE FACTOR AT A CENTRAL POINT AND THEN SUBTRACTING A CONSTANT FROM THE RESULTING COORDINATES:

NP LOC = (NP ACS83 – NCP ACS83) * CF + NCP ACS83 – KN

EP LOC = (EP ACS83 – ECP ACS83) * CF + ECP ACS83 – KE

WHERE

NP LOC = LOCAL NORTH, NP ACS83 = ACS 83 NORTH, NCP ACS83 = ACS 83 AT CENTRAL POINT
EP LOC = LOCAL EAST, EP ACS83 = ACS 83 EAST, NCP ACS83 = ACS 83 AT CENTRAL POINT

COMBINED FACTOR (CF) = 1.000086723
CONSTANT (K) = N 300,000.000, E 900,000.000

N 385467.742 (ACS83) N 85457.742 (LOCAL) *CENTRAL POINT
E 1079665.960 (ACS83) E 179665.960 (LOCAL)

PROJECT BEARING:
THE SOUTH LINE OF THE SOUTHWEST ONE-QUARTER OF SECTION 11, T-16-S, R-16-E, G&SRM, PIMA COUNTY, AZ, FROM A 1-1/2" LEAD CAP IN 4"X4" CONCRETE BASE AT THE SOUTHWEST CORNER TO A 1-1/2" LEAD CAP IN 4"X4" CONCRETE BASE AT THE SOUTH 1/4 CORNER.

SAID BEARING BEING: N 89°46'13" E AT A DISTANCE OF 2624.28 FEET.

PROJECT BENCHMARK:
2" BRASS CAP SURVEY MONUMENT IN CONCRETE STAMPED "RLS 14145" (Point 5), LOCATED ON THE NORTHEASTERLY RIGHT-OF-WAY OF MARY ANN CLEVELAND WAY AND THE CENTERLINE OF HOPE CAMP DRIVE (SOUTHEASTERLY OF THE CIENEGA H.S. FOOTBALL FIELD).

SAID ELEVATION BEING 3206.13 (NAVD88).

THE VERTICAL DATUM FOR THIS PROJECT IS THE NORTH AMERICAN VERTICAL DATUM, 1988 (NAVD88). ORTHOMETRIC HEIGHTS (ELEVATIONS) WERE DERIVED FROM GPS MEASUREMENT OF ELLIPSOID HEIGHTS AND TRANSFORMED USING A HIGH RESOLUTION GEOID MODEL, GEOID 12A.

MONUMENT TABLE

POINT	NORTHING	EASTING	DESCRIPTION
5	85358.59	1710572.64	2" BRASS CAP SURVEY MONUMENT, MARKED "RLS 14145" (BENCHMARK)
17	84580.86	1744598.33	2" BRASS CAP SURVEY MONUMENT, MARKED "RLS 12214"
41	83454.23	182974.44	1-1/2" LEAD CAP IN 4"X4" CONCRETE BASE
62	83443.71	180350.18	1-1/2" LEAD CAP IN 4"X4" CONCRETE BASE
77	68341.06	185105.96	2" BRASS CAP SURVEY MONUMENT
1000	85585.68	168055.28	BEGIN CL STATIONING
1025	84093.85	175500.44	END CL STATIONING

SCALES:	HORIZ. 1"=300'
	VERT. N/A

SHEET HC1 OF HC1

PRISCILLA S. CORNELIO, P.E., DIRECTOR

NO.	REVISION DESCRIPTION	DIV. ENGINEER	DATE
1	ADDENDUM #1		6/16

		DATE
DESIGNED:	KHL/CRJ	12/15
DRAWN:	KHL/CRJ	12/15
CHECKED:	KED	12/15
PROJ. ENG.:	KHL	12/15

PIMA COUNTY DEPARTMENT OF TRANSPORTATION

HORIZONTAL CONTROL PLAN FOR OLD VAIL SAFE ROUTES TO SCHOOL

PSOMAS
333 E. Wetmore Road, Suite 450
Tucson, AZ 85705
(520) 292-2037 Tel
www.psomas.com
(520) 292-1280 fax

Old Vail Safe Routes to School – Red Iron Trail to Long Tank Drive – Project No. 40LVMS

F.H.W.A. REGION	STATE	PROJECT NO.	SHEET NO.	TOTAL SHEETS	AS BUILT
9	ARIZ.	PPM 0 (237)D	5	35	
		PPM 0 (204)D			

General Notes:

1. See PC/COT Std. Detail 207 for additional construction notes.
2. See PC/COT Std. Detail 200 for Joint Requirements.
3. See Project Plans for concrete landing location. Concrete landing should be oriented to align with the crosswalk or stop bar, median refuge area, and with the opposite landing in the direction of pedestrian travel.
4. This landing will be paid for under Item No. 9080292 if the landing includes the detectable warning strip.

KEYNOTES

1. Concrete Landing Control Point. See Paving Plans for location.
2. Detectable Warning Strip 8'x2' (Min.) See PC/COT Std. Detail 207, Sht. 8 of 8, for guidance on width of Detectable Warning Strip.
3. Rough Broom Finish. Use ripple pattern (Typ.)
4. Existing or New Concrete header, See Plans for locations. New Concrete Header Paid per Item # 9080402

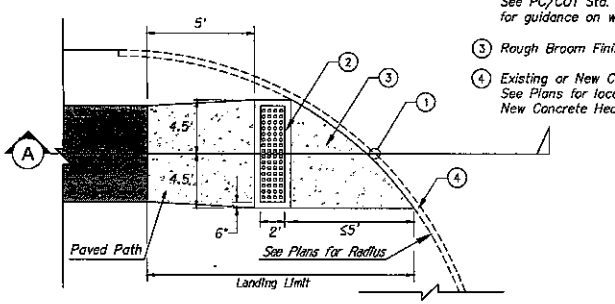

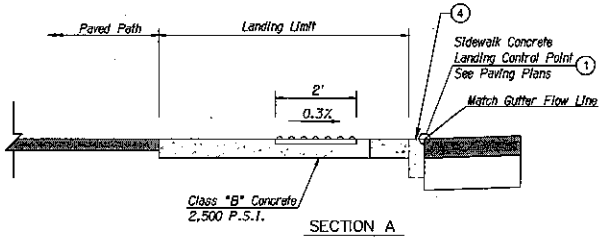

SECTION A

CONCRETE LANDING W/DETECTABLE WARNING STRIP

(H) NTS

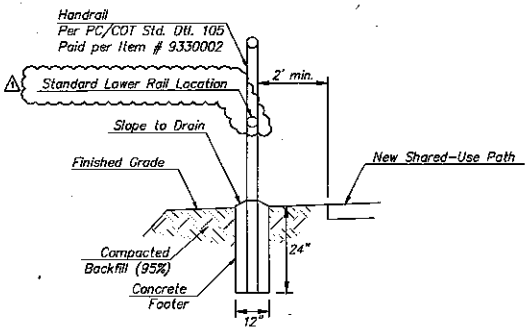

(J) HANDRAIL DETAIL

NTS

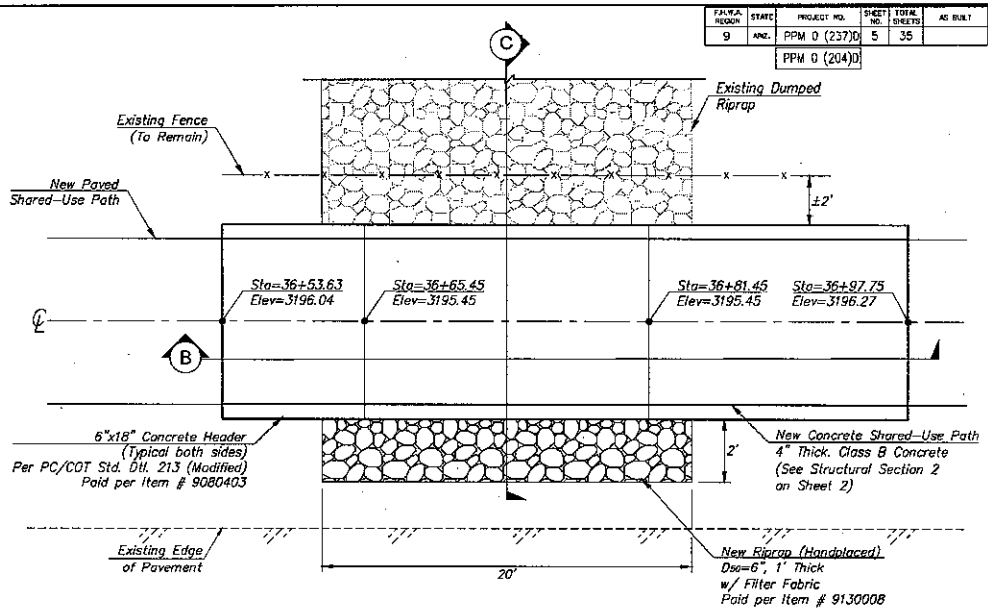

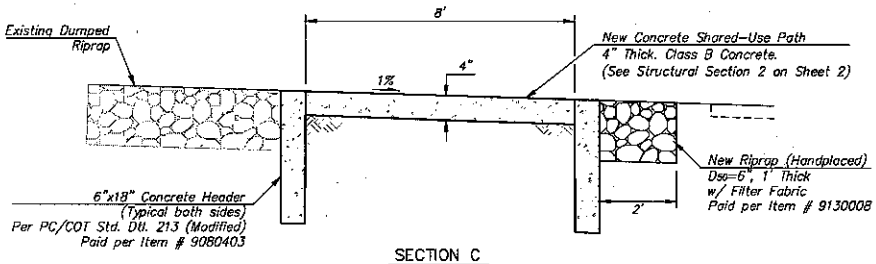

SECTION C

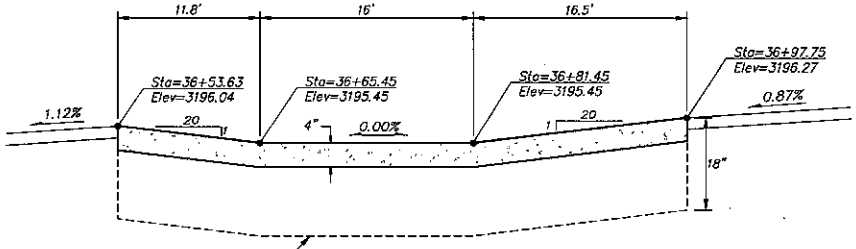

SECTION B

(I) DRAINAGE CROSSING STA 36+73

NTS

PRISCILLA S. CORNELIO, P.E., DIRECTOR

NO.	REVISION DESCRIPTION	DIV. ENGINEER	DATE
1	ADDENDUM #1		5/16

		DATE
DESIGNED:	KUL/CRJ	12/15
DRAWN:	KUL/CRJ	12/15
CHECKED:	MED	12/15
PROJ. ENG.:	KUL	12/15

PSOMAS
333 E. Wetmore Road, Suite 450
Tucson, AZ 85705
(520) 292-2300 (520) 292-1200 fax
www.psomas.com

PIMA COUNTY DEPARTMENT OF TRANSPORTATION

SHARED-USE PATH DETAILS FOR OLD VAIL SAFE ROUTES TO SCHOOL

Old Vail Safe Routes to School – Red Iron Trail to Long Tank Drive – Project No. 40LVMS

SCALES: HORIZ. NTS VERT.

SHEET DT1 OF DT2

F.H.W.A. REGION	STATE	PROJECT NO.	SHEET NO.	TOTAL SHEETS	AS BUILT
9	ARIZ.	PPM 0 (237)D	14	35	
		PPM 0 (204)D			

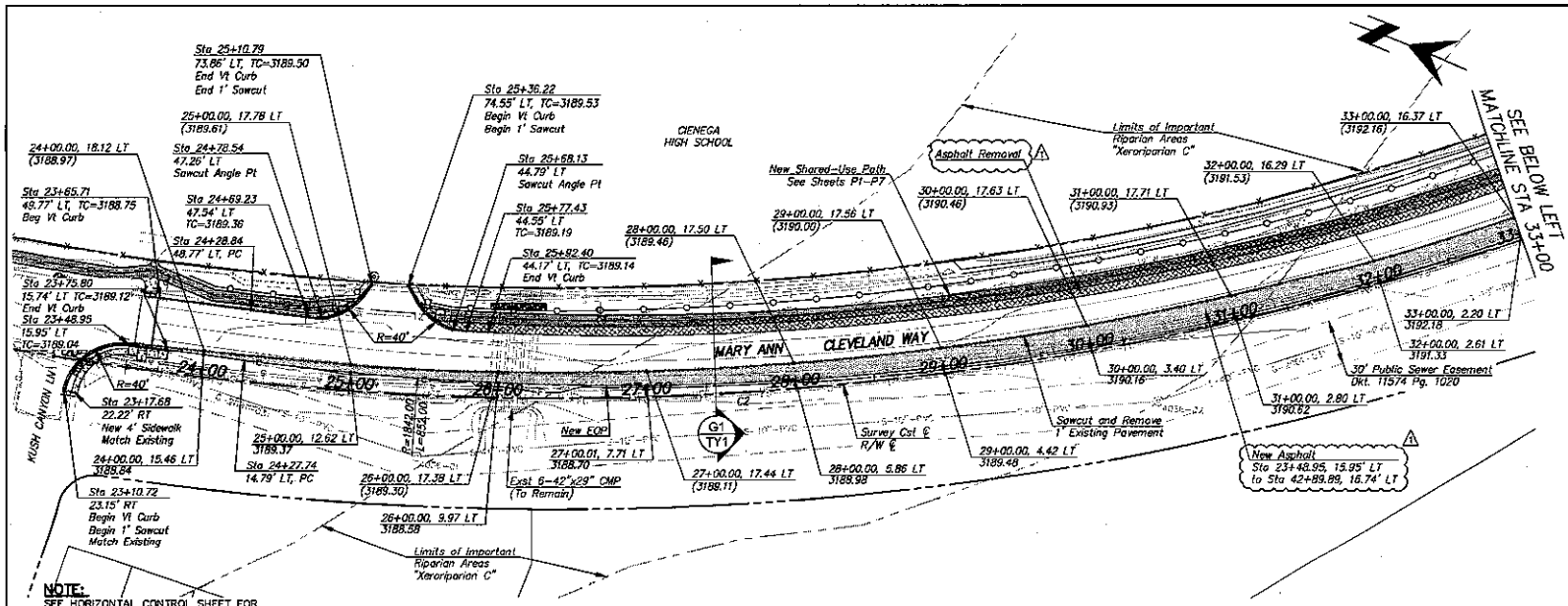

NOTE:
SEE HORIZONTAL CONTROL SHEET FOR LINE AND CURVE DATA.

MARY ANN CLEVELAND WAY

ALL STATIONING IS ALONG RIGHT OF WAY CENTERLINE

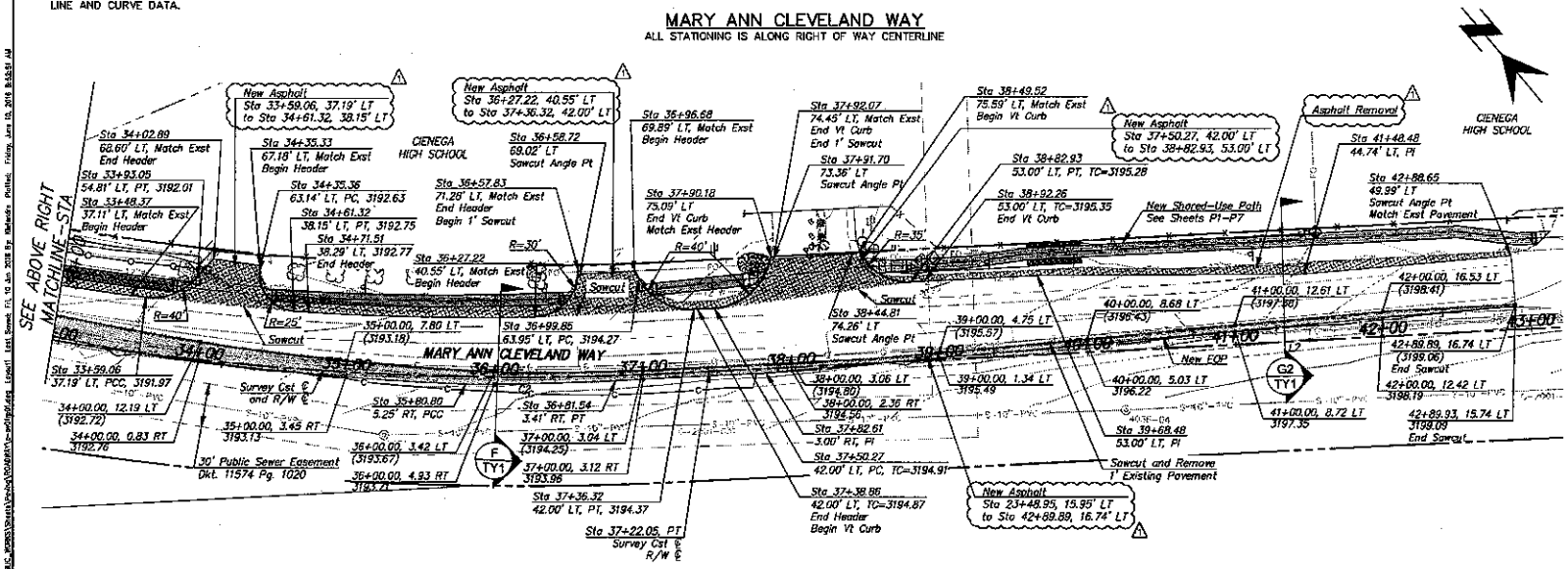

LEGEND

- New Asphalt
- Asphalt Removal

40 0 20 40 60 80

Call at least two full working days before you begin excavation
ARIZONA 811
Arizona Blue Stake, Inc.
Dial 8-1-1 or 1-800-STAKE-IT (782-5348)
In Maricopa County (602) 263-1100

NOTES:

1. ALL STATIONING IS ALONG RIGHT OF WAY CENTERLINE.
2. ALL PAVEMENT REMOVAL AND OBLITERATION SHALL BE PAID PER ITEM #2020001.

NO.	REVISION DESCRIPTION	DW. ENGINEER	DATE
1	ADDENDUM #1		6/16

		DATE
DESIGNED:	KRL/CSU	12/15
DRAWN:	KRL/CSU	12/15
CHECKED:	KRL	12/15
PROJ. ENG.:	KRL	12/15

PRISCILLA S. CORNELIO, P.E., DIRECTOR

PIMA COUNTY DEPARTMENT OF TRANSPORTATION

PAVEMENT REALIGNMENT PLAN

OLD VAIL

SAFE ROUTES TO SCHOOL

STA 23+64.88 TO STA 42+89.89

PSOMAS
333 E. Wetmore Road, Suite 450
Tucson, AZ 85705
(520) 295-1650 (520) 292-1290 fax
www.psomas.com

Old Vail Safe Routes to School – Red Iron Trail to Long Tank Drive – Project No. 40LWKS

SCALES: HORIZ. 1"=40' VERT. N/A

SHEET R1 OF R1

PIMA COUNTY PAVEMENT MARKING GENERAL NOTES:

1. All equipment/materials and construction shall meet or exceed the requirements contained in the current City of Tucson/Pima County (COT/PC) Standard Specifications and the Standard Details for Public Improvements, the Special Provisions and the approved plans. All pavement marking shall be installed in accordance with the PC/COT Pavement Marking Design Manual.
2. The striping contractor shall contact the Pima County pavement marking supervisor (520-724-2624) at least 3 working days in advance of any pavement marking layout being installed to schedule inspection and approval of pavement marking.
3. Upon approval of the pavement marking layout, the Pima County pavement marking supervisor will issue written authorization to the contractor to proceed with installing all pavement markings and associated reflective raised pavement markings.
4. The permanent pavement markings may be modified as directed and approved by the traffic engineer or by his designee.
5. The design vehicle is WB-50. The posted speed limit is 35 mph.
6. All lane dimensions are measured from the center of lane line, center of double lane line, or edge of pavement unless otherwise noted.
7. The pavement marking drawings are schematic only. The contractor shall follow all dimensions, applicable marking details, and specified Pima County standards when installing pavement striping, symbols, legends, and markers.
8. Painted layout striping shall be 15 mils (0.015") thick, water based paint placed on the final pavement surface. Painted layout striping shall be installed within five (5) working days of the final pavement surface being completed.
9. Painted symbols and legends shall be applied at the same time as the painted striping, with the exception of bike lane symbols and words (such as STOP, AHEAD, ONLY, etc.).
10. The final longitudinal striping shall be 90 mils (0.090") thick hot-sprayed thermoplastic reflectorized striping placed over the painted layout striping within 21 to 30 calendar days of the final pavement surface being completed. All previously exempted longline markings shall be applied during the final longitudinal striping.
11. All final transverse striping shall be hot-sprayed thermoplastic 90 mils (0.090") thick including symbols and legends with the exception of bike lane symbols which may be extruded thermoplastic or cold preformed thermoplastic.
12. The contractor shall be responsible for the layout and installation of pavement markings on the final surface course following one control line per direction of travel consisting of control points that have been set to no more than 50 feet apart on curve sections and 200 feet in tangent sections where the pavement marking pattern does not change.
13. It is the contractor's responsibility to ensure that the final surface course is placed so that the construction joint is no more than one foot offset from the final striping.
14. All raised pavement markers (RPMs) shall be installed so that the reflective face of each marker is facing the direction of traffic and is perpendicular to the direction of traffic flow. Type C pavement markers shall be installed so that the clear reflective face of each marker is facing approaching traffic and perpendicular to the direction of traffic flow.
15. All raised pavement markers (rpms) shall be installed per the current edition of the PC/COT Pavement Marking Design Manual.
16. All removal of existing pavement markings shall be accomplished in accordance with section 701 of the PC/COT Standard Specifications and shall be paid under Item 2020001. Painting over existing striping does not constitute approved striping obliteration. △1
17. For private development projects, the design consultant/project manager shall be required to produce as-built striping plans within 90 days of striping completion.
18. Unless otherwise noted, all pavement markings shall be installed by the contractor.
19. Upon final inspection, a written acceptance or itemized punchlist of missing or unacceptable pavement markings shall be submitted to the contractor and Pima County by the traffic engineer or designated representative.
20. The contractor shall be responsible for maintaining all striping until project is approved for "construction acceptance" by Pima County (fully open to traffic, all punchlist items are completed, and one year warranties begin).
21. The PC/COT Pavement Marking Design Manual is available online at:

"http://dot.pima.gov/trafeng/designmanual/pavementmanual.pdf"

PIMA COUNTY SIGNING GENERAL NOTES

1. All equipment, materials and construction shall meet or exceed the requirements contained in the current City of Tucson / Pima County (COT/PC) Standard Specifications and the COT/PC Standard Details for Public Improvements, the Special Provisions and the approved plans.
2. All signs shall be in compliance with the latest edition of the Manual on Uniform Traffic Control Devices (MUTCD), the MUTCD Arizona supplement, the latest edition of the Pima County / City of Tucson Signing Manual, these plans, and the Special Provisions.
3. Signs may be modified and locations adjusted to fit conditions in the field at the discretion of the traffic engineer.
4. The posted speed limit for Mary Ann Cleveland Way from Red Iron Trail to Long Tank Drive is 35 MPH. Sign placement shall be based on the posted speed limit.
5. Post lengths indicated in the sign summary are approximate. The contractor shall verify actual post lengths.
6. All perforated posts shall be installed in a concrete foundation, unless otherwise directed by the traffic engineer.
7. All sign station locations are approximate. The contractor shall verify actual sign locations with the traffic engineer prior to the installation of any signs.
8. The contractor shall be responsible for coordinating all work with Blue Stake, for installing all traffic signs in the field, and for maintaining all signing until project is approved for "construction acceptance" by Pima County (fully open to traffic, all punch list items are completed, and one year warranties begin).
9. All overhead mounted signs shall be Diamond Grade sheeting, Type XI. All school signs shall be fluorescent yellow/green, Diamond Grade sheeting, Type XI. All other signs shall be High Intensity Prismatic sheeting, Type IV. All ground mounted signs shall have an anti graffiti coating applied to sign face, 3M #1160 film or equivalent.
10. All new signs shall have 0.080 gauge, radius corner, aluminum backing unless otherwise noted.
11. Prior to disturbing any traffic signs, a sign condition inventory of all existing signing shall be conducted by the contractor and provided to the Pima County sign shop supervisor (520-724-2600). Inventory shall indicate current sign location and condition, including any existing damage or deficiencies.
12. Any signs and posts being re-used on this project shall be stockpiled in a manner to avoid damage and maintain the integrity of the signs. Safe storage of stockpile and payment for damage to the stockpile shall be the responsibility of the contractor.
13. All signs and posts not being re-used on this project shall be dismantled, stacked and delivered to the owner (city or county) by the contractor. The contractor is responsible for the safe storage at the construction site until delivery, and the safe unloading of the salvaged material. Notification of delivery shall be made at least 2 working days prior to delivery. Pima County sign shop: 1313 South Mission Road (520-724-2631). No Friday deliveries.

△1

PAVEMENT MARKING QUANTITIES

ITEM NO.	ITEM	UNIT	QTY
7010250	Obliterate Pavement Marking	L.F.	135
7040005	Pavement Marking (White Extruded Thermoplastic) (0.09")	L.F.	8,100
7040006	Pavement Marking (Yellow Extruded Thermoplastic) (0.09")	L.F.	4,795
7040032	Pavement Marking (White Extruded Thermoplastic) Sgl. Arrow (0.090")	EACH	4
7040062	Pavement Legend (White Extruded Thermoplastic) (ONLY) (0.090")	EACH	2
7050080	Pavement Legend, Preformed, Type I, Bike Lane Legend and Symbol	EACH	3
7060020	Pavement Marker, Reflective, (Type C, Clear, Red)	EACH	7
7060025	Pavement Marker, Reflective, (Type D, Yellow, Two-Way)	EACH	72
7080001	Painted Pavement Marking	L.F.	10,695
7080010	Painted Pavement Symbol or Legend	EACH	12

SIGNING QUANTITIES

ITEM NO.	ITEM DESCRIPTION	UNIT	QTY
2020001	Removal of Structures & Obstructions	L.S.	1
6070010	Sign Post (Perforated) (Single)	L.F.	122
6070020	Sign Post (U-Channel) (Galvanized Steel)	EACH	13
6070110	Foundation for Sign Post (Perforated)	EACH	10
6080016	Sign Panel (Traffic Control) (Permanent) (Type IV)	S.F.	34
6080081	Flat Sheet Aluminum w/ Direct Apply Or Silk-Screen Characters	S.F.	12

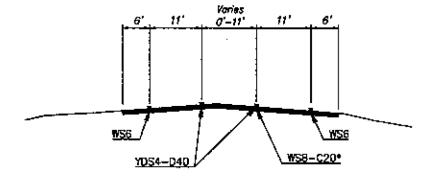

*-At turn lane only

MARY ANN CLEVELAND WAY
STA 32+83 TO STA 37+82 NTS

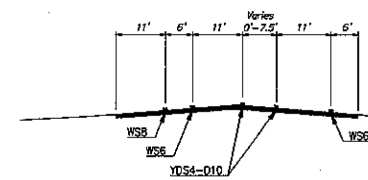

MARY ANN CLEVELAND WAY
STA 38+56 TO STA 41+46 NTS

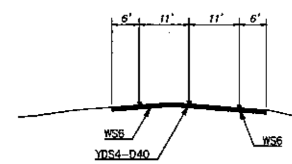

MARY ANN CLEVELAND WAY
STA 23+65 TO STA 32+83
STA 41+46 TO STA 42+90 NTS

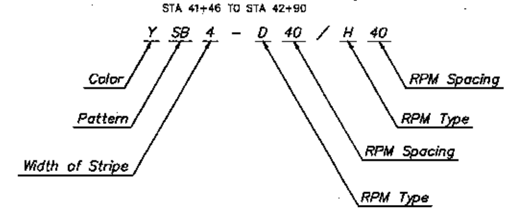

LINE STYLE DESIGNATION

See PC/COT Pavement Marking Design Manual, Sheet 2-3 for Further Descriptions.

F.H.W.A. REGION	STATE	PROJECT NO.	SHEET NO.	TOTAL SHEETS	AS BUILT
9	ARIZ.	PPM 0 (237)D	15	35	
		PPM 0 (204)D			

PRISCILLA S. CORNELIO, P.E., DIRECTOR

		DATE
DESIGNED:	KUL/CRJ	12/15
DRAWN:	KUL/CRJ	12/15
CHECKED:	MED	12/15
PROJ. ENG.:	KUL	12/15

NO.	REVISION DESCRIPTION	DIV. ENGINEER	DATE
1	ADDENDUM #1		6/16

46896 KEVIN U. LETENDRE

PSOMAS
333 E. Wetmore Road, Suite 450
Tucson, AZ 85705
(520) 292-2300 (520) 292-1290 fax
www.psomas.com

PIMA COUNTY DEPARTMENT OF TRANSPORTATION

PAVEMENT MARKINGS & SIGNING PLAN FOR OLD VAIL SAFE ROUTES TO SCHOOL

Call at least two full working days before you begin excavation. ARIZONA811

SCALES: HORZ. N/A VERT. N/A

F.H.W.A. REGION	STATE	PROJECT NO.	SHEET NO.	TOTAL SHEETS	AS BUILT
9	ARIZ.	PPM 0 (237)D	16	35	
		PPM 0 (204)D			

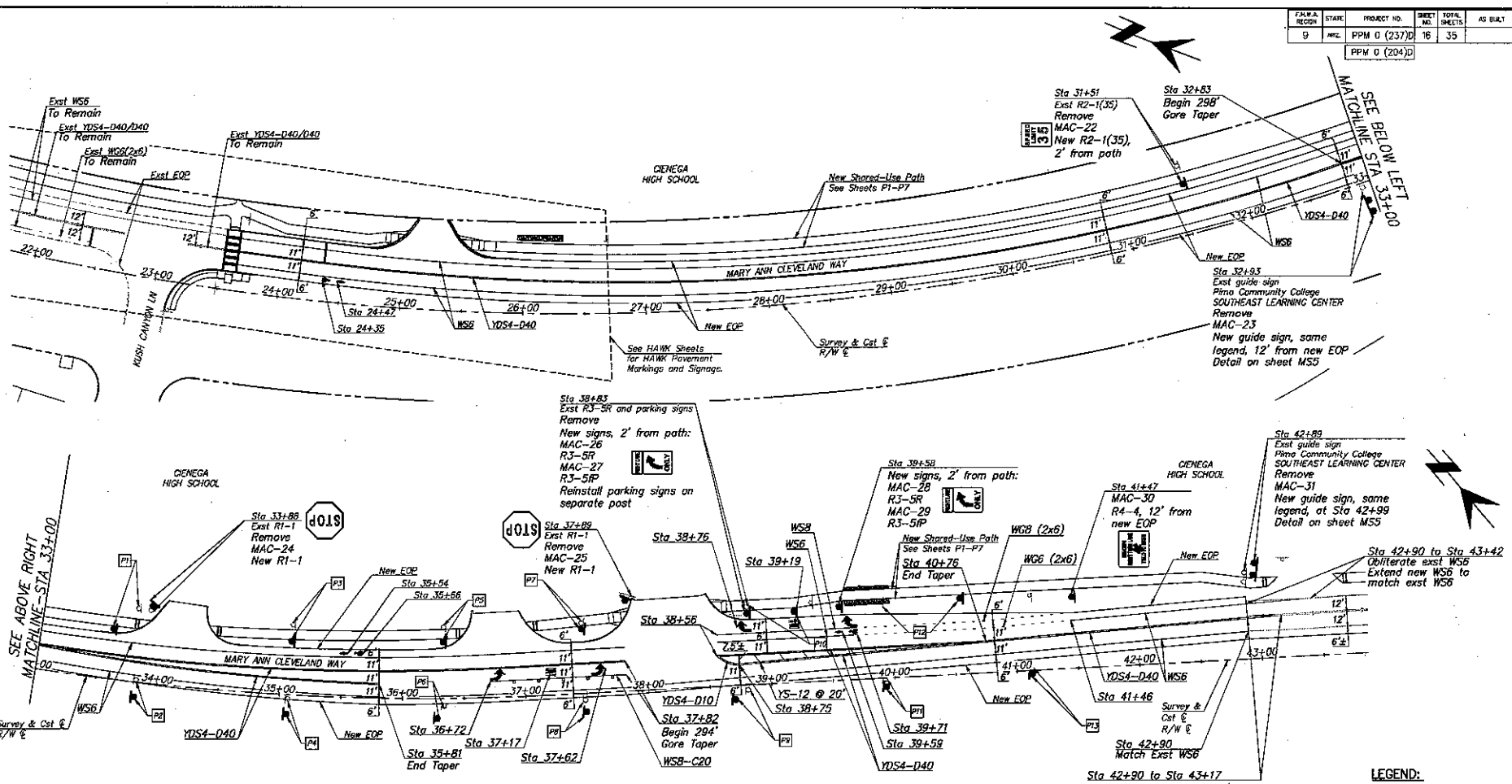

NOTES FOR KEYNOTES P1 THROUGH P13

EXISTING CONDITIONS

Exst parking control signs and plaques:

Sign R7-Special
NO STOPPING STANDING OR PARKING
WHEN SCHOOL IN SESSION
12" x 24"

Plaque R8-hP
7 AM-4 PM
12" x 6"

Exst signs are mounted on U-channel posts attached to U-channel base posts, per Pima County Signing Manual, Sheet 8-4.

WORK PROPOSED

1. Before construction, remove and save signs, plaques, and signposts, store them for reinstallation.
2. Remove and salvage U-channel base posts.
3. After construction, reinstall signposts, signs, and plaques on new U-channel base posts (item 6070020 in cost estimate), per Pima County Signing Manual, Sheet 8-4, at the locations listed on the table at right.
4. On SW side of road, install signs 12' from new edge of pavement.
5. On NE side of road, install signs between new edge of pavement and path. Locate signs 1' from path, or 12' from edge of pavement if possible.

Keynote	Existing locations		Proposed locations	
	Station	Offset	Station	Offset
P1	33+78	60' Lt	33+59	40' Lt
P2	33+83	2' Lt	33+83	12' Rt
P3	35+08	58' Lt	35+08	44' Lt
P4	35+07	3' Rt	35+07	16' Rt
P5	36+34	58' Lt	36+34	46' Lt
P6	36+34	6' Rt	36+28	16' Rt
P7	37+46	58' Lt	37+48	53' Lt
P8	37+48	5' Rt	37+48	15' Rt
P9	38+81	4' Rt	38+70	11' Rt
P10	38+83	63' Lt	39+20	58' Lt
P11	39+92	1' Rt	39+92	7' Rt
P12	41+13	60' Lt	40+57	61' Lt
P13	41+12	1' Lt	41+12	3' Rt

LEGEND:

Exst signpost

New signpost

NOTES:

1. ALL STATIONING IS ALONG RIGHT OF WAY CENTERLINE.
2. ALL SIGNS SHALL BE NEW EXCEPT SIGNS MARKED BY KEYNOTES P1 THROUGH P13.
3. ALL PAVEMENT REMOVAL AND OBLITERATION SHALL BE PAID PER ITEM #2020001.

Call at least two full working days before you begin excavation
ARIZONA811
Arizona Blue Stake, Inc.
Dial 8-1-1 or 1-800-STAKE(IT) (782-5348)
In Maricopa County: (602) 263-1100

SCALES: HORIZ. 1"=40' VERT. N/A

SHEET MS2 OF MS3

PRISCILLA S. CORNELIO, P.E., DIRECTOR

DESIGNED:	KUL/RJJ	12/15
DRAWN:	KUL/JAJ	12/15
CHECKED:	MED	12/15
PROJ. ENG.:	KUL	12/15

NO.	REVISION DESCRIPTION	DIV. ENGINEER	DATE
1	ADDENDUM #1		6/16

PSOMAS
333 E. Wetmore Road, Suite 450
Tucson, AZ 85705
(520) 792-3285 (520) 792-1200 fax
www.psomas.com

PIMA COUNTY DEPARTMENT OF TRANSPORTATION

PAVEMENT MARKING & SIGNING PLAN FOR OLD VAIL SAFE ROUTES TO SCHOOL

Old Vail Safe Routes to School – Red Iron Trail to Long Tank Drive – Project No. 40LVAS