TRIM

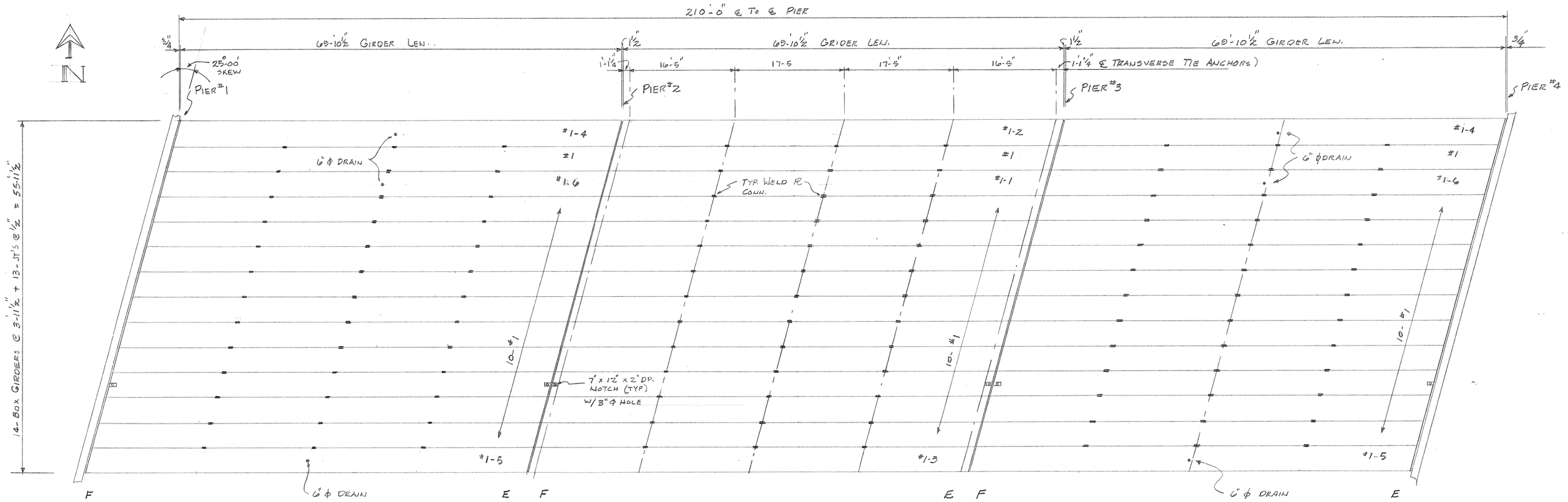

GIRDER FRAMING PLAN

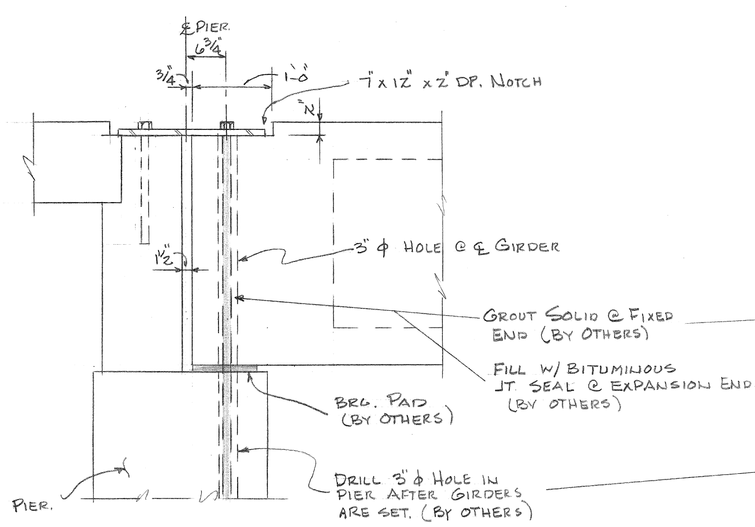

BRG. @ END PIERS

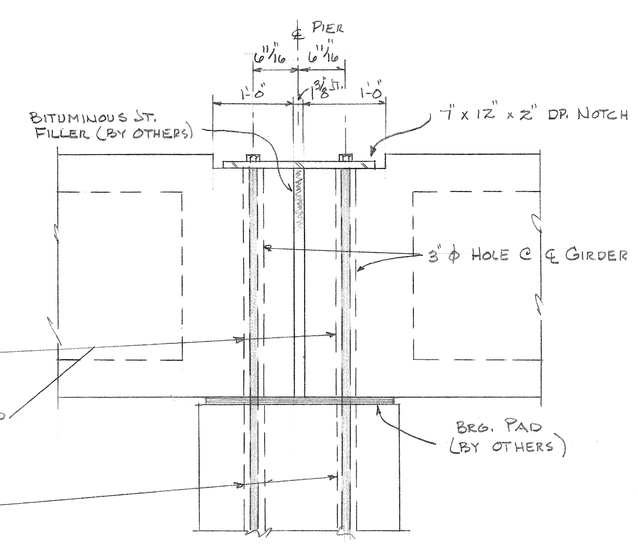

BRG. @ INTERIOR PIERS

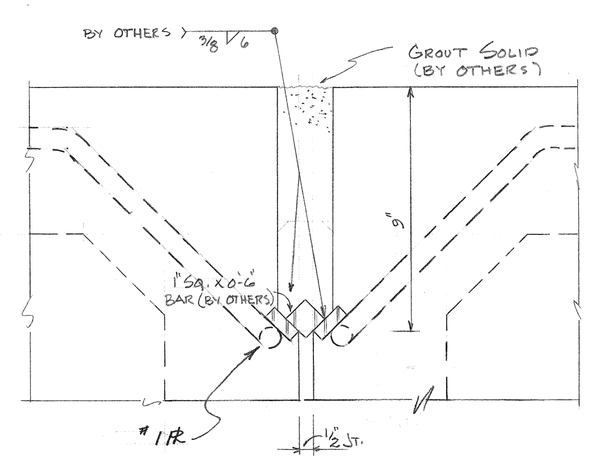

TYP. WELD CONN. △1

IN-PLACE

NO.	REVISIONS	DATE
△1	REV. TYP. WELD.	9-16-75

DATE	7-31-75
DRAWN BY	D. ANDERSON
JOB NO.	9340
CHECKED BY	B.E.C.

THE TANNER COMPANIES
Tpo division

3052 S. 19TH AVE.
P. O. BOX 20128
PHOENIX, ARIZ. 85036
(602) 262-1211

5175 N. CASA GRANDE HWY.
TUCSON, ARIZ.
(602) 887-7820

TROPICANA & BUFFALO AVE.
LAS VEGAS, NEVADA
(702) 876-6330

HELMET PEAK - SAHUARITA RD. SANTA CRUZ RIVER BRIDGE
PIMA COUNTY
FRAMING PLAN & DETAILS

SHT. NO. S1 OF 4

TRIM

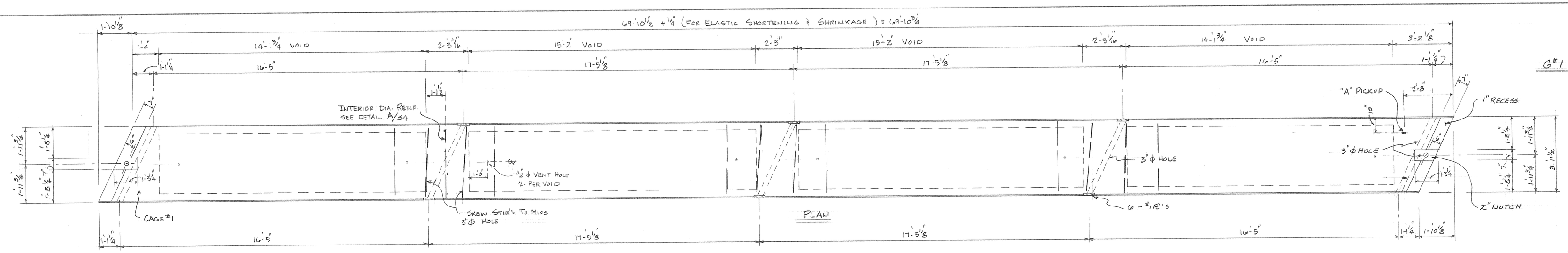

G#1

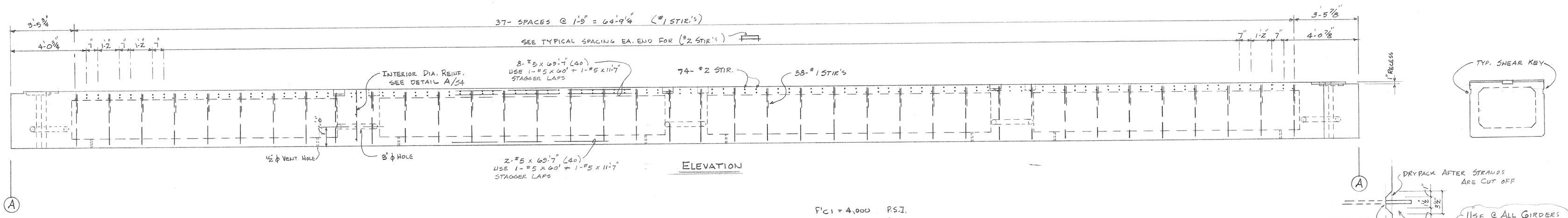

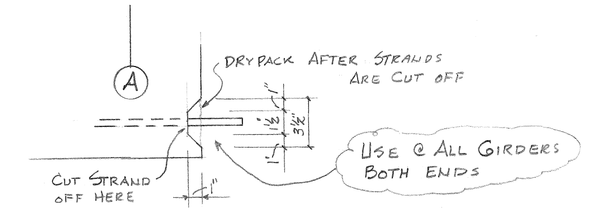

TYP. STRAND CUTOFF

F'c1 = 4,000 P.S.I.
F'c = 5,000 P.S.I.

G#1 33-REQ'D. CLASS "S" CONC.

66,077#

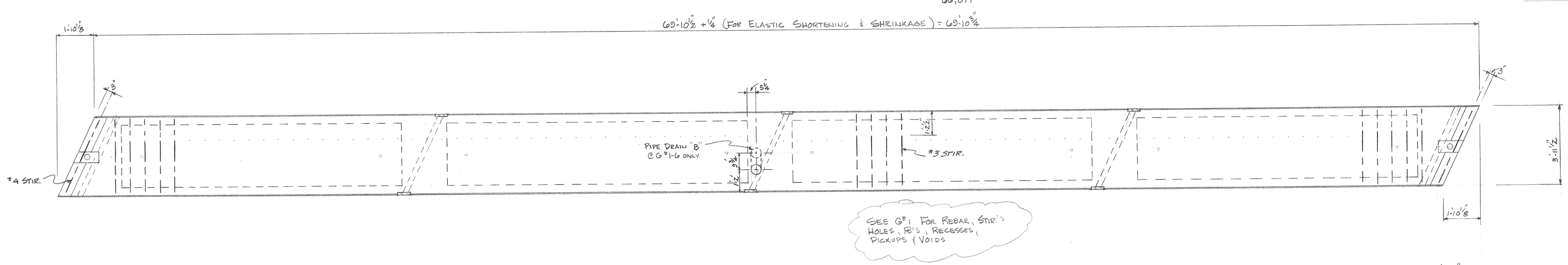

G#1-1
G#1-6

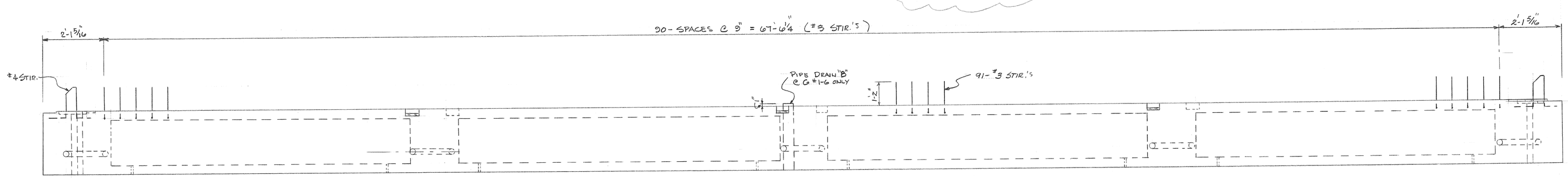

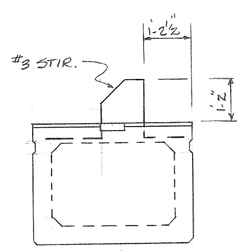

G#1-1 1-REQ'D.
G#1-6 2-REQ'D.

NO.	REVISIONS	DATE

DATE	DRAWN BY
7-31-75	D. ANDERSON
JOB NO. 9340	CHECKED BY B.E.C.

THE TANNER COMPANIES
Tpo division

3052 S. 19TH AVE.
P. O. BOX 20128
PHOENIX, ARIZ. 85036
(602) 262-1211

5175 N. CASA GRANDE HWY.
TUCSON, ARIZ.
(602) 887-7620

TROPICANA & BUFFALO AVE.
LAS VEGAS, NEVADA
(702) 876-6330

HELMET PEAK - SAHUARITA RD. SANTA CRUZ RIVER BRIDGE
PIMA - COUNTY
GIRDER DETAILS

SHT. NO. S2 OF 4

TRIM

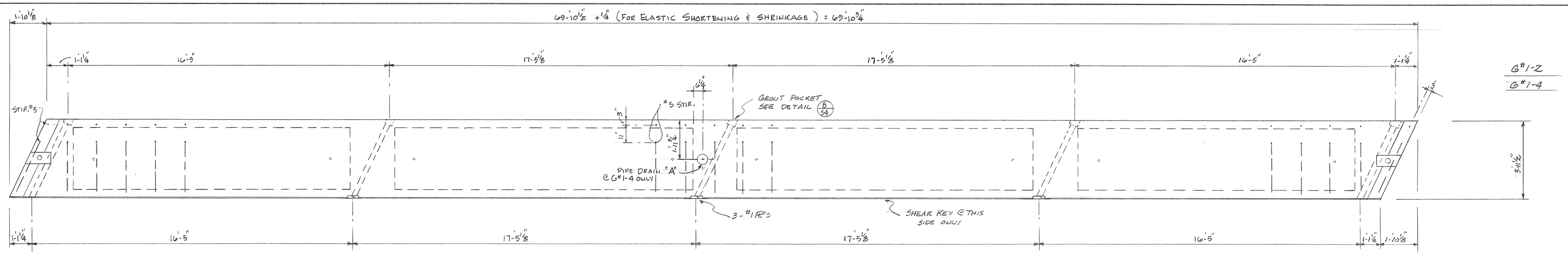

G#1-2
G#1-4

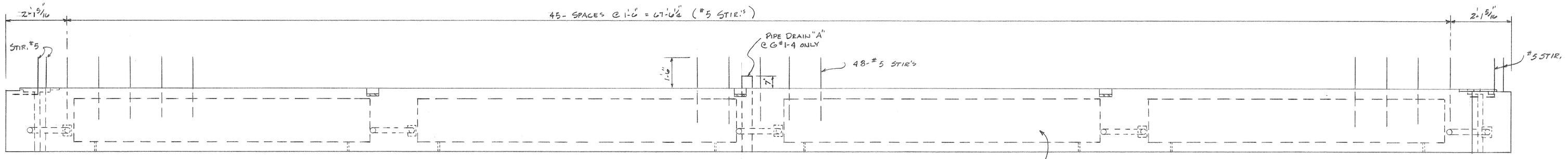

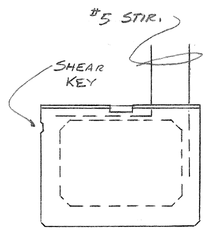

END VIEW

SEE G#1 FOR REBAR, STIR'S, HOLES, RECESSES, PICKUPS & VOIDS.

G#1-2	1-REQ'D.
G#1-4	2-REQ'D.

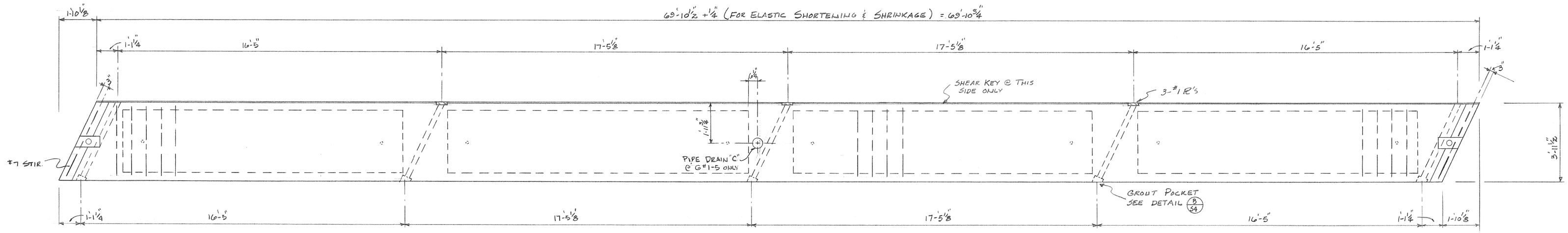

G#1-3
G#1-5

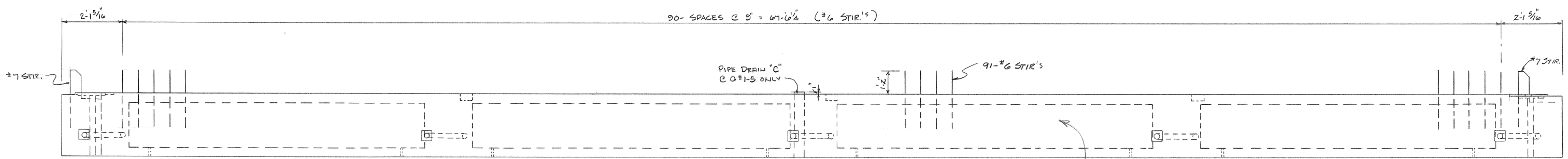

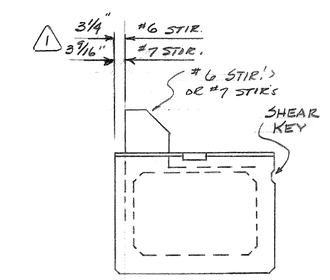

END VIEW

SEE G#1 FOR REBAR, STIR'S, HOLES, RECESSES, PICKUPS & VOIDS

G#1-3	1-REQ'D.
G#1-5	2-REQ'D.

NO.	REVISIONS	DATE
1	REV. SIDE SPACE ON #6 & #7 STIRUP.	7-16-75

DATE	DRAWN BY
7-31-75	D. ANDERSON
JOB NO. 9340	CHECKED BY B.E.C.

THE TANNER COMPANIES
Tpo division

3052 S. 19TH AVE.
P. O. BOX 20128
PHOENIX, ARIZ. 85036
(602) 262-1211

5175 N. CASA GRANDE HWY.
TUCSON, ARIZ.
(602) 887-7820

TROPICANA & BUFFALO AVE.
LAS VEGAS, NEVADA
(702) 876-6330

HELMET PEAK-SAHUARITA RD. SANTA CRUZ RIVER BRIDGE

PIMA - COUNTY

GIRDER DETAILS

SHT. NO. 53 OF 4

TRIM

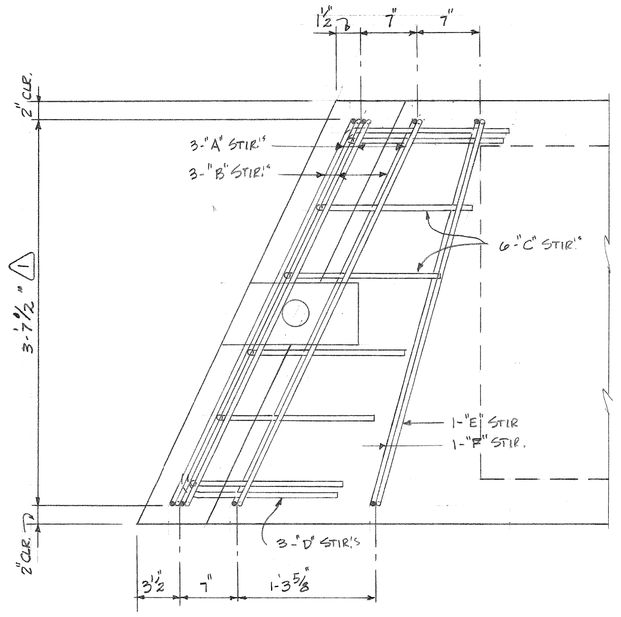

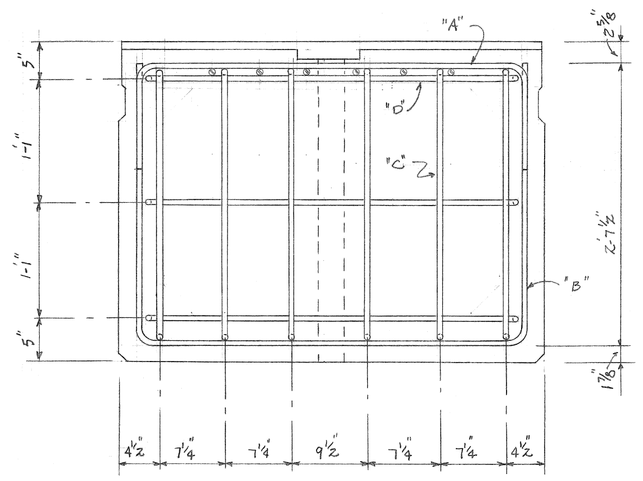

CAGE #1

ALL STIR.'s #5 BAR (40)

"A" STIR. = 3'-11½" 1'-0

"B" STIR. = 2'-7½"

"C" STIR. = 1'-6 2'-5⅝"

"D" STIR. = 1'-7¼" 3'-9⅞" 1'-6

"E" STIR. = 3'-8⅝" 1'-0

"F" STIR. = 2'-8⅝" 3'-8½"

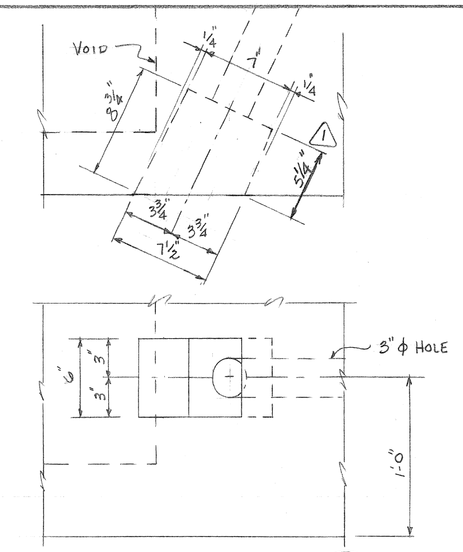

TYP. GROUT POCKET (B/S4)

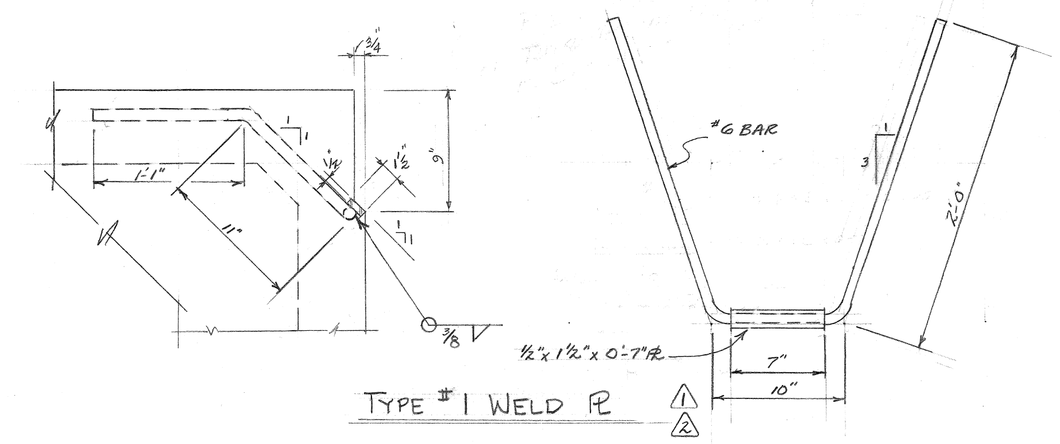

TYPE #1 WELD PL

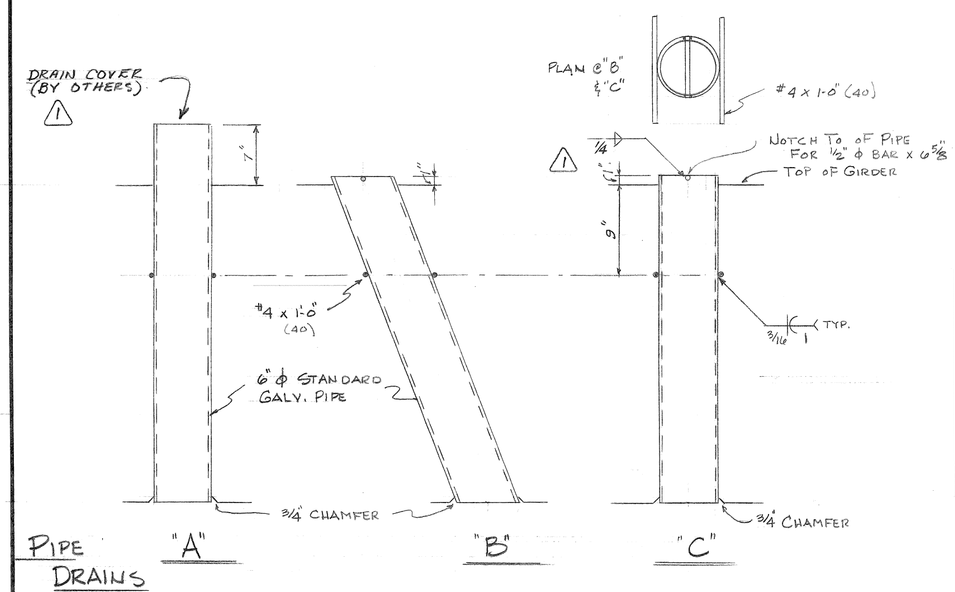

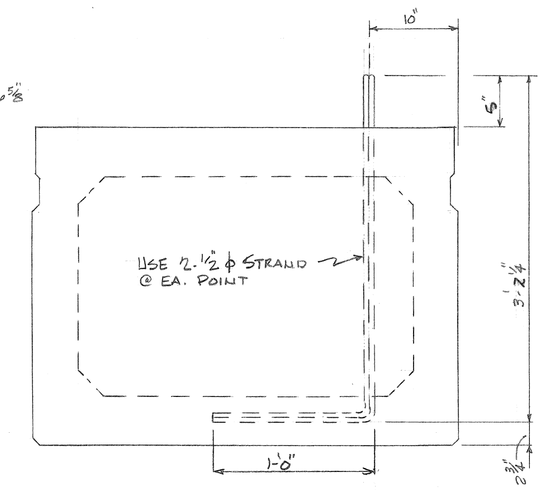

TYP. "A" PICKUP

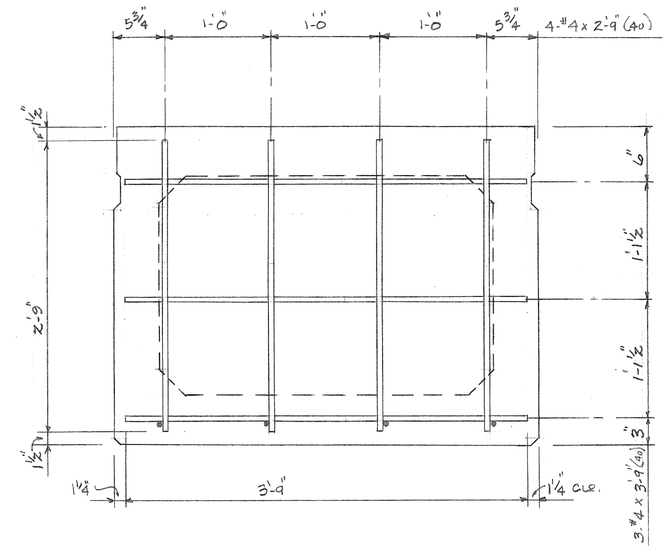

INTERIOR DIAPH. REINFORCING (A/S4)

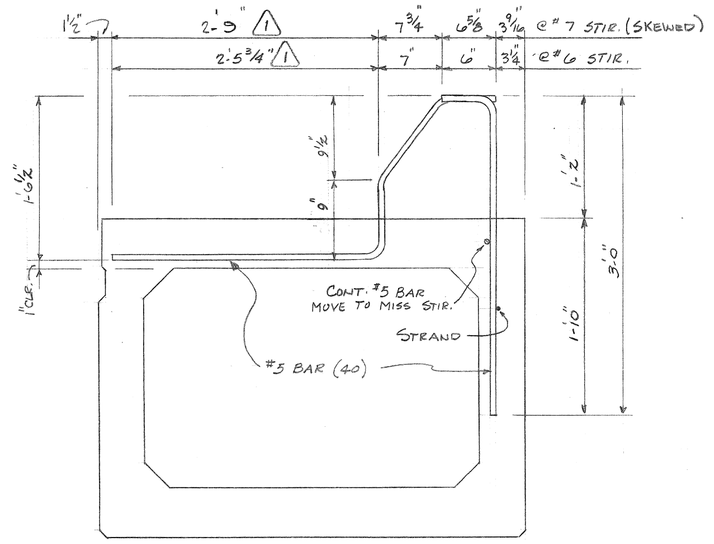

STIRRUP #6 & #7

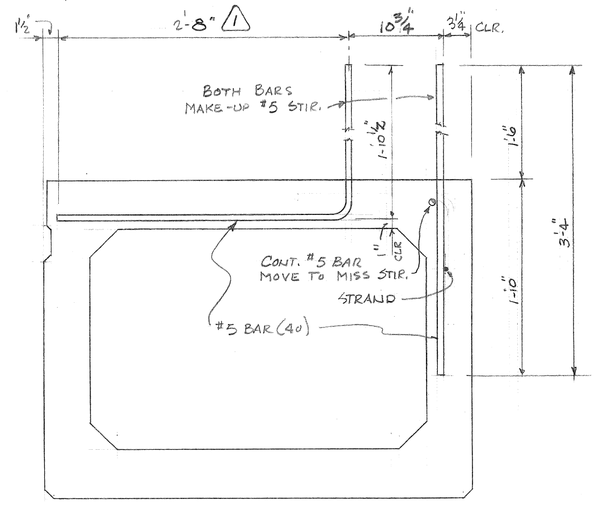

STIRRUP #5

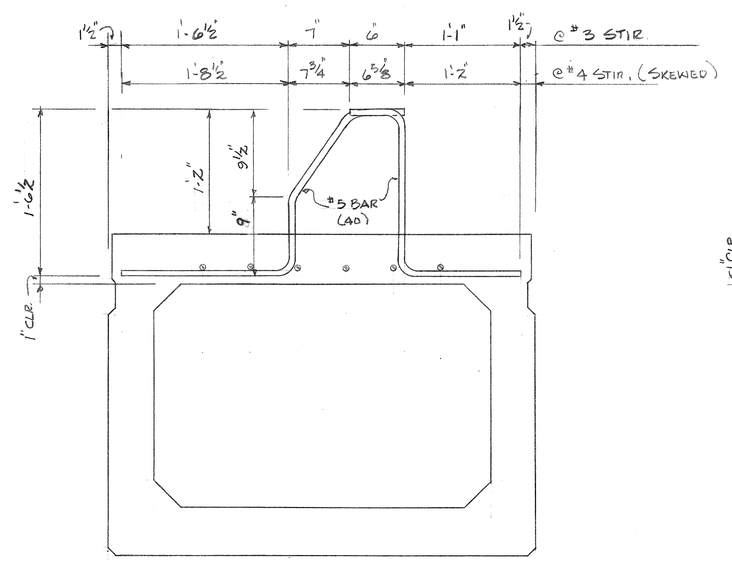

STIRRUP #3 & #4

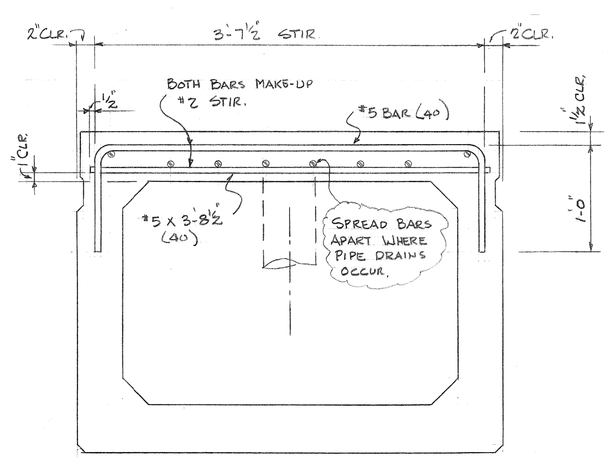

STIRRUP #2

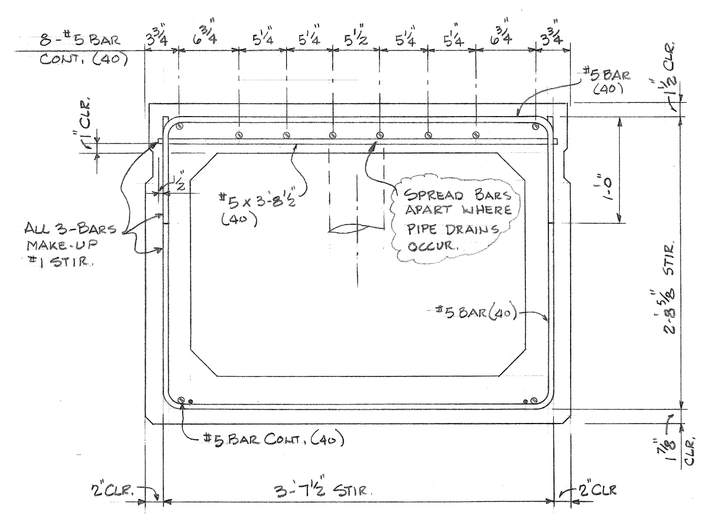

STIRRUP #1

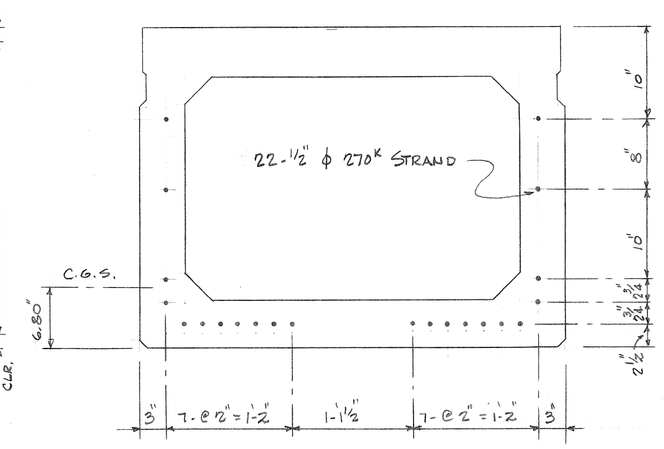

STRAND PATTERN (A)

f'ci = 4,000 P.S.I
f'c = 5,000 P.S.I.
CLASS "S" CONC.

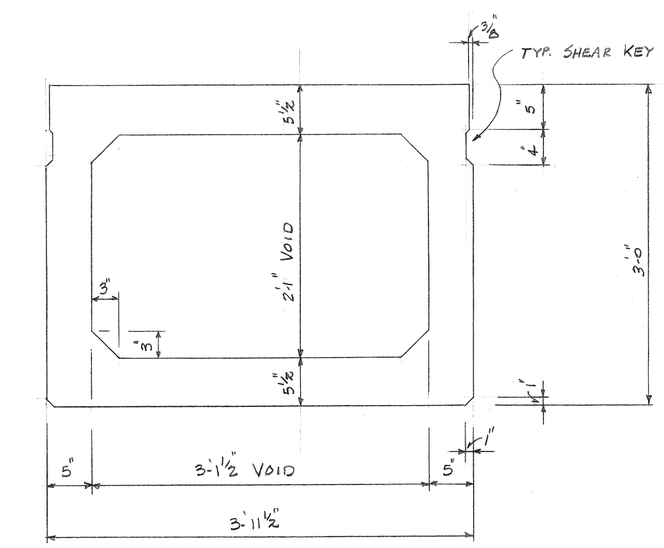

TYP. CROSS SECTION

NO.	REVISIONS	DATE
1	REV. GEN.	9-16-75
2	REVISED #1 PL	9-23-75
3	REVISED PICKUP	9-29-75

DATE	DRAWN BY
7-31-75	D. ANDERSON
JOB NO.	CHECKED BY
9840	B.E.C.

THE TANNER COMPANIES
Tpo division
3052 S. 19TH AVE.
P. O. BOX 20128
PHOENIX, ARIZ. 85036
(602) 262-1211
5175 N. CASA GRANDE HWY.
TUCSON, ARIZ.
(602) 887-7820
TROPICANA & BUFFALO AVE.
LAS VEGAS, NEVADA
(702) 876-6330

HELMET PEAK - SAHUARITA RD SANTA CRUZ RIVER BRIDGE

PIMA - COUNTY

DETAILS

SHT. NO. S4 OF 4