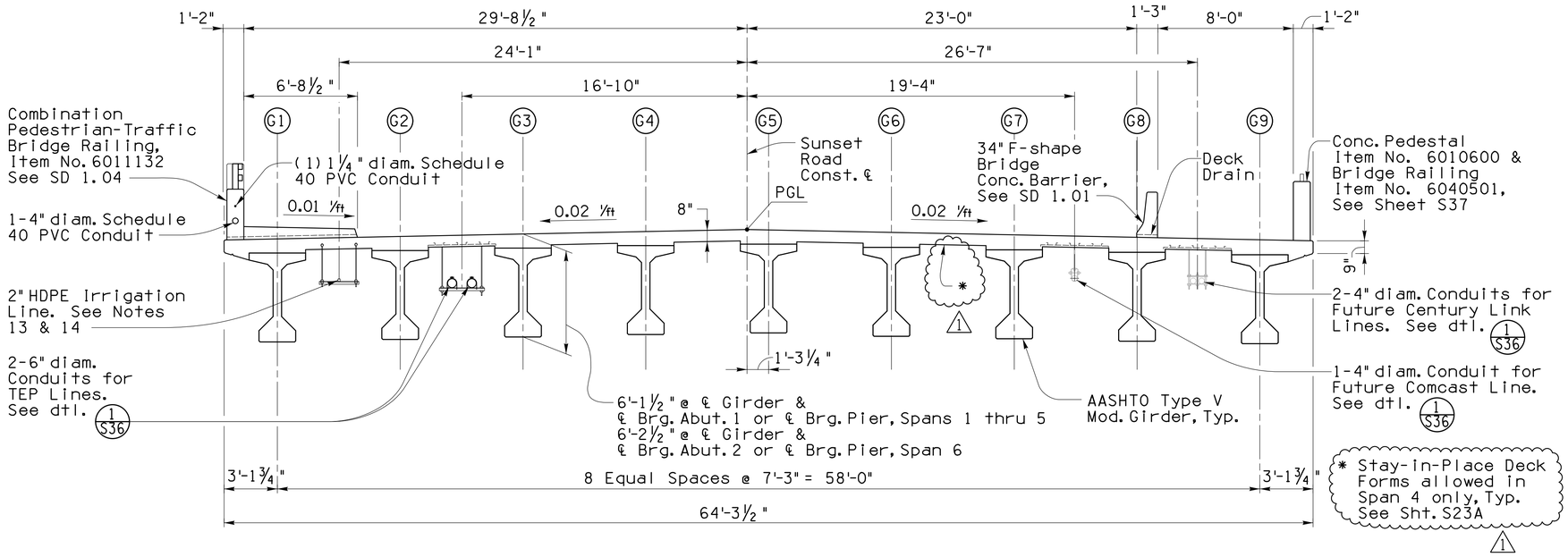

TYPICAL SECTION
¼" = 1'-0"

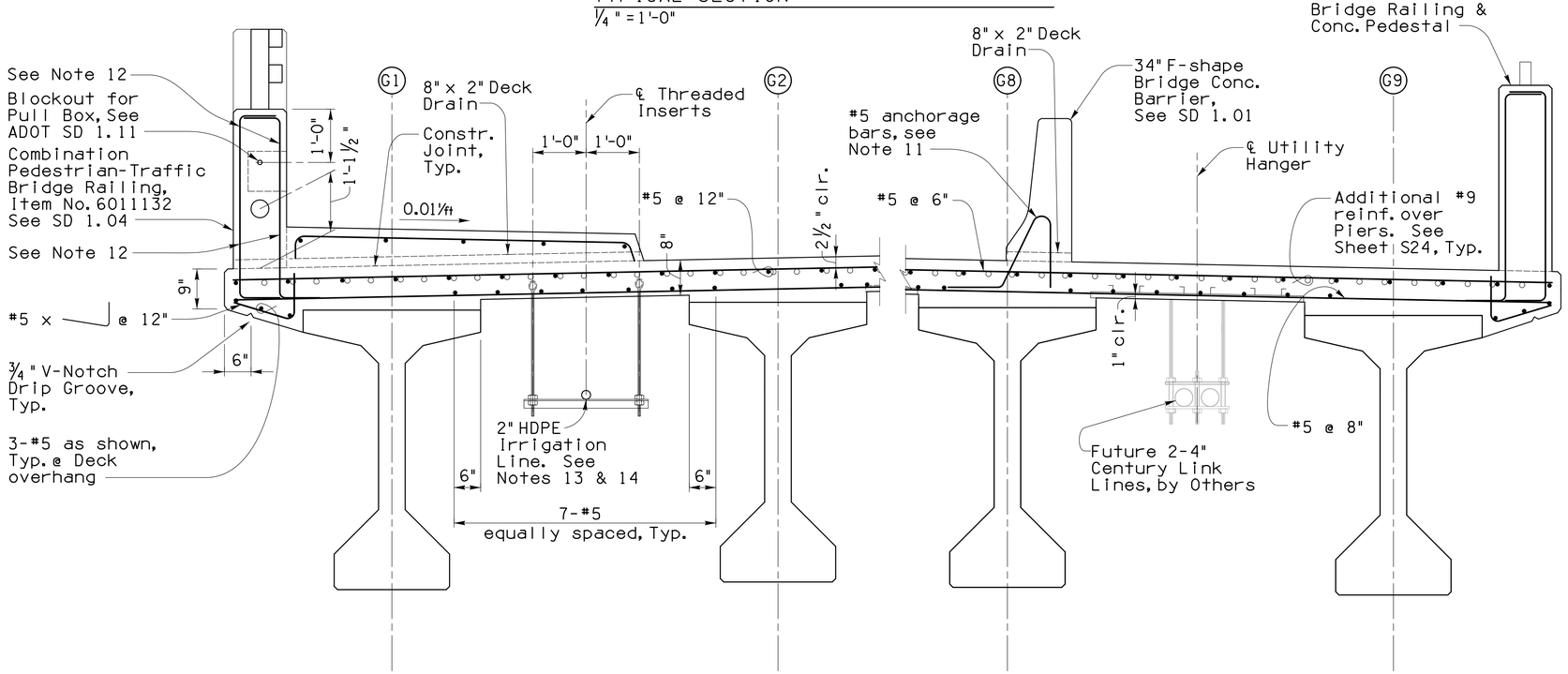

TYPICAL PARTIAL SECTION
¾" = 1'-0"

NOTES:

1. Longitudinal Deck reinforcement shall be placed parallel to ℄ Girder.
2. Transverse Deck reinforcement shall be placed perpendicular to Cst. ℄ with spacing measured along Cst. ℄.
3. Bars shall not be spliced within the required lap length of adjacent bars.
4. Top transverse bars in the Deck Slab shall be spliced where required at mid-span between centerline of Girders.
5. Bottom transverse bars in Deck Slab shall be spliced where required at centerline of Girder.
6. Minimum lap length of bar splices shall be
   #5 bars: 2'-2"
7. Contractor to submit Shop Drawings showing lap splice locations to the Engineer for approval prior to fabrication.
8. Intermediate Diaphragms and expansion Pier Diaphragms shall be poured prior to the Deck pour.
9. Pinned Abutment & Pier Diaphragms shall be poured concurrent with the Deck pour.
10. Contractor shall submit a Deck Pour Schedule to the Engineer for approval prior to placing concrete.
11. For size and spacing of anchorage bars for the 34" F-shape Concrete Bridge Barriers, see SD 1.01. Anchorage bars are included in the linear cost of the concrete Barriers.
12. For size and spacing of reinforcing bars, see SD 1.04.
13. Provide ½" threaded inserts at 42" maximum spacing and at a minimum distance for 24" from face of Abutments, Pier Caps or Interior Diaphragms.
14. For 2" HDPE irrigation line hanger detail, See Irrigation Plans.
15. All cost associated with the construction of the Combination Pedestrian Traffic Bridge Railing, including conduits, pull boxes, sidewalk, railing, dado, anchorage bars and deck drains are included in pay item No. 6011132.
16. ITS and irrigation elec. conduits are incidental to cost of Combination Pedestrian/Traffic Bridge Railing.

Priscilla S. Cornelio, P.E., Director

Designed	JAN		Date 11/15
Drawn	JHS, MJL		11/15
Checked	CGP		11/15
Proj. Engr.	JAN		11/15

No.	Revision Description	Engineer	Date
1	S.I.P. Deck Span 4	C. Perchinelli	1/6/16

Structural Grace, Inc
5131 E. Fort Lowell Rd., Ste. 200, Tucson, AZ 85719 (520) 3204156
Expires 6-30-2016

Call at least two full working days before you begin excavation. ARIZONA 811 Arizona Blue Stake, Inc. Dial 8-1-1 or 1-800-STAKE IT (782-5348) In Maricopa County (602) 263-1100

Pima County Department of Transportation

TYP. DECK SECTIONS
SUNSET ROAD - SEGMENT 1
SILVERBELL RD. TO I-10

PROJECT NO. 4RTSUN

SUNSET ROAD - SILVERBELL ROAD TO I-10 - PROJECT NO. 4RTSUN

Scale:	As Noted	Sheet S23 of S43	Page 92 of 203

FILE NAME: W:\Jobs\2013\1326.01_Sunset_PDS\1326.01_Working\1326_Sunset_S23_DD1_Rev 1.dgn DATE: 1/7/2016 TIME: 10:52:42 AM JSmitley

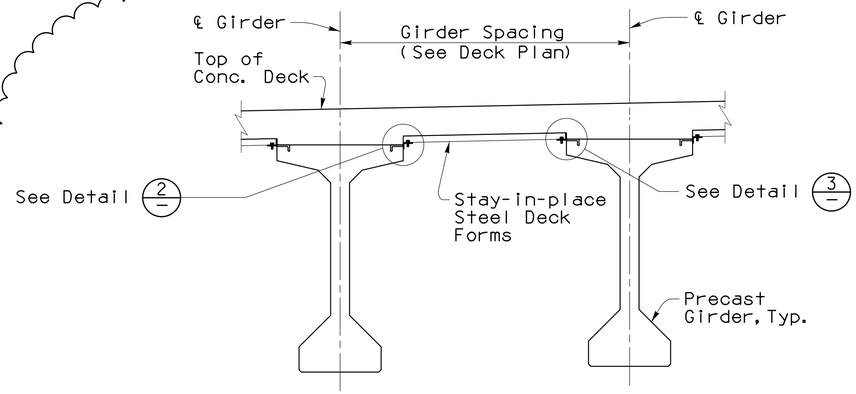

STAY-IN-PLACE STEEL DECK FORM DETAIL 1
No Scale

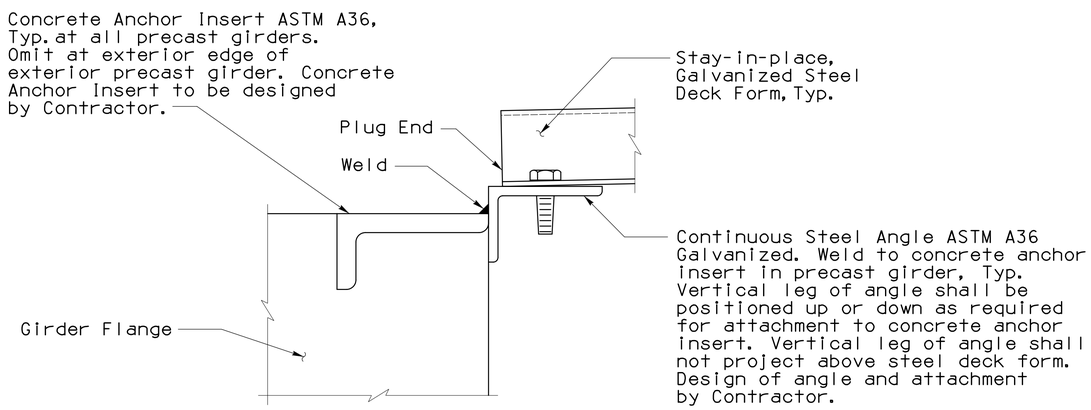

DETAIL 2
No Scale

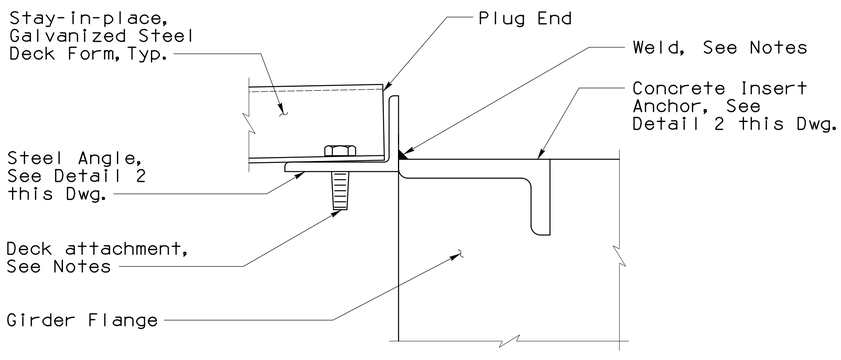

DETAIL 3
No Scale

STAY-IN-PLACE STEEL DECK FORM NOTES:

The elevation at the top of the girders shall be measured after erection of the girders and prior to placement of the steel deck forms.

The concrete insert anchors may be cast with the girder to accommodate the use of stay-in-place steel deck forms. Alternate methods of support will be considered provided the detail is adequate to support the loads, prevent leakage, and allow for adjustment for the varying build-up to maintain a constant deck thickness. The contractor shall determine the sizes of all screws, welds, angles, etc. to support the required loads.

Permanent steel stay-in-place forms shall conform to the requirements of ASTM A653 having a coating designation of G165. Structural Steel Grade 50 Class 3 shall not be used. Materials shall be 20 gauge or greater in thickness.

The contractor shall submit shop drawings showing details of the stay-in-place steel deck forms including the method of installation and adjustment for approval. The steel deck form submittal must be made simultaneously with the precast girder shop drawings to ensure coordination between the girder fabrication and the stay-in-place steel deck form design.

Dead loads shall include the weight of concrete, reinforcing steel, forms and falsework. The weight of concrete, reinforcing steel and forms shall be assumed to be not less than 160 pounds per cubic foot. Weight of forms and fill concrete shall not exceed 16 psf.

Live loads shall consist of the actual weight of any equipment to be supported by the forms applied as concentrated loads at the points of contact and a uniform load of not less than 50 pounds per square foot applied over the area supported.

The contractor shall use due care in the placement of the girders to ensure a constant distance is maintained between the girder flanges.

Stay-in-place steel deck form construction shall provide the required inserts for all under-deck utilities.

The stay-in-place steel deck forms and the attachments to the girders shall be designed by an engineer registered in Arizona.

The cost of the stay-in-place steel deck forms shall be incidental to the cost of the bridge deck.

See Special Provisions for additional information.

1

Priscilla S. Cornelio, P.E., Director

		Date
Designed	JAM	1/16
Drawn	JHS, MJL	1/16
Checked	CGP	1/16
Proj. Engr.	JAM	1/16

No.	Revision Description	Engineer	Date
1	New S.I.P. Deck Form Sht.	C. Perchinelli	1/6/16

Structural Grace, Inc
14301 E. Fort Lowell Rd., Ste. 200, Tucson, AZ 85719 (520) 320-0156

Call at least two full working days before you begin excavation.
ARIZONA BLUE STAKE, INC.
Dial 8-1-1 or 1-800-STAKE-IT (782-5348)
In Maricopa County: (602) 263-1100

Pima County Department of Transportation

STAY-IN-PLACE DECK FORM DETAILS
SUNSET ROAD - SEGMENT 1
SILVERBELL RD. TO I-10
PROJECT NO. 4RTSUN

SUNSET ROAD - SILVERBELL ROAD TO I-10 - PROJECT NO. 4RTSUN

Scale:	As Noted	Sheet S23A of S43	Page 92A of 203

FILE NAME: W:\Jobs\2013\1326.01_Sunset_PDS\1326.01_Working\1326_Sunset_S23A_SF1_Rev 1.dgn DATE: 1/7/2016 TIME: 10:51:32 AM JSmitley