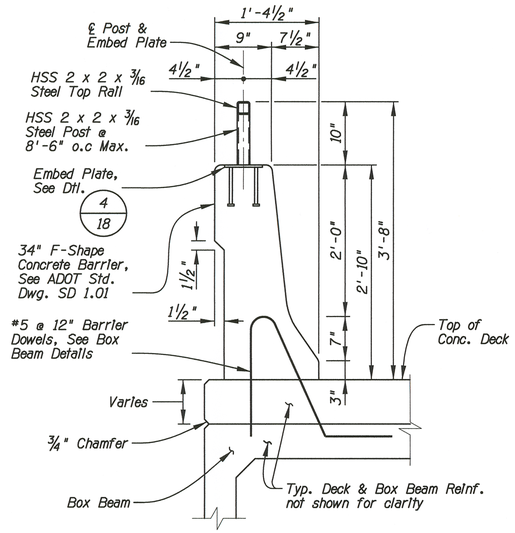

Note:

Metal Railing and Embed Plates to be galvanized after fabrication.

SECTION - METAL RAILING ON CONC. BARRIER (1)

Scale 1"=1'-0"

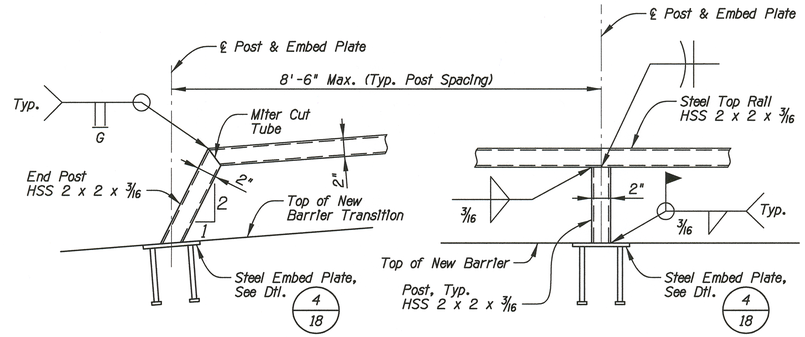

END POST

TYPICAL POST

DETAIL - METAL RAILING CONNECTIONS (2)

Scale 1½"=1'-0"

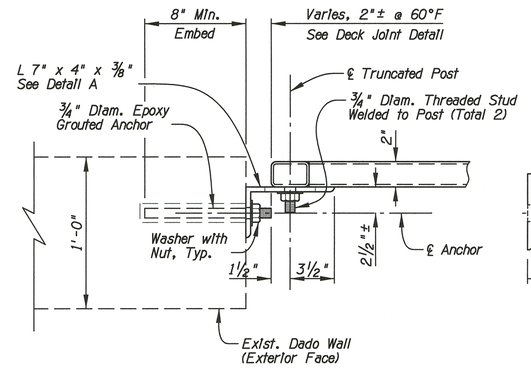

DETAIL - END CONNECTION (3)

No Scale

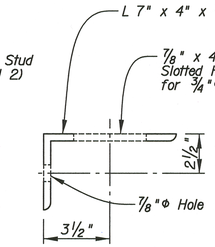

DETAIL (A)

No Scale

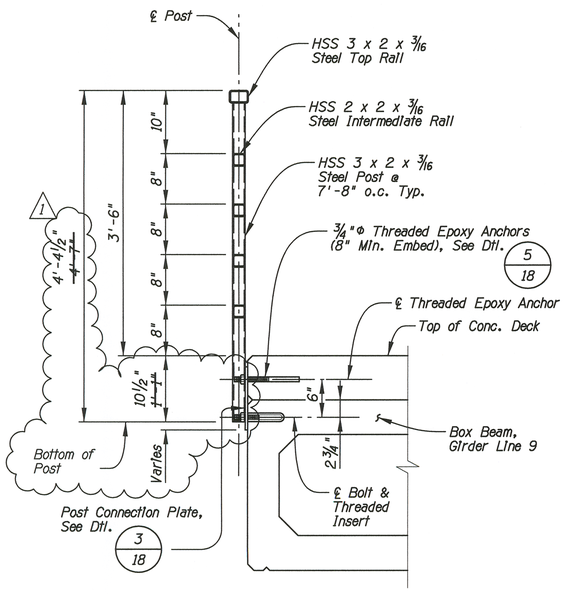

SECTION - PEDESTRIAN RAILING (4)

Scale 1"=1'-0"

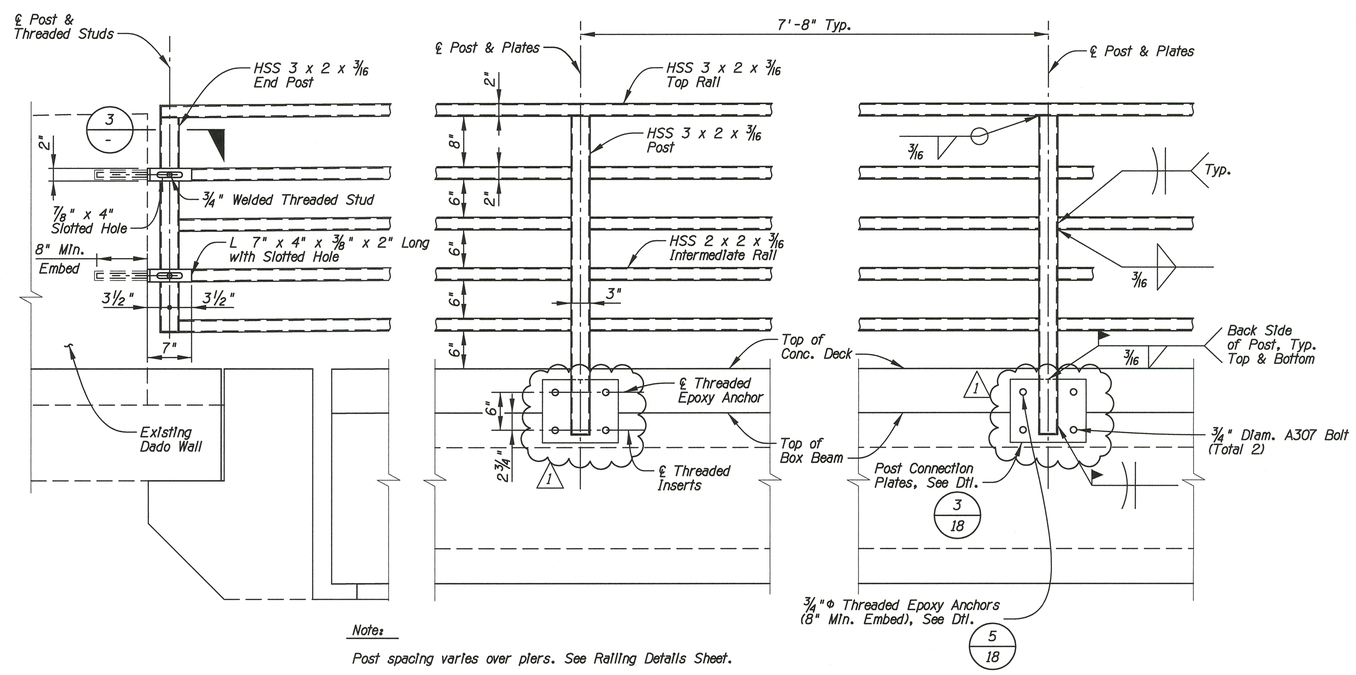

Note:

Post spacing varies over piers. See Railing Details Sheet.

DETAIL - PEDESTRIAN RAILING CONNECTIONS (5)

Scale 1"=1'-0"

Notes:

1. See Notes on sheet 16.
2. Field verify embed plate location prior to fabricating metal railing.
3. Areas to be field welded shall be masked prior to galvanizing. Field welds shall be coated with an Engineer approved zinc rich paint after welding.

Scales	Horiz. / Vert.	Sheet 17 of 23	Page of

Pima County Department of Transportation

Priscilla S. Cornelio, P.E., Director

		Date
Designed	ZDS	8/14/15
Drawn	ZDS	8/14/15
Checked	JAC	8/14/15
Proj. Engr.	TWB	8/14/15

No.	Revision Description	Date	Engineer
1	Post Length Revision	9/4/15	TWB

Registered Professional Engineer (Civil) CERTIFICATE NO. 29368 TED W. BUELL Date Signed 9/4/15 ARIZONA U.S.A. Expires 09-30-2017

BARRIER AND RAILING DETAILS
ELEPHANT HEAD ROAD BRIDGE
OVER THE SANTA CRUZ RIVER
PROJECT NO. 4RTEHB

Over the Santa Cruz River - Project No. 4RTEHB

Elephant Head Road Bridge -

Pentable: plotcrdk.TBL
Plotdriver: COTPWApdf_V8full_BW.plt

Project ID: 00000000258562
Client Number: 012145

ProjectWise Directory: Pima_County_Dept_of_Transportation\Pima_County_QCL_List\PCQCL-Elephant_Head_BridgeTO_1\6.0_CAD_BIM\6.2_Work_In_Progress\Drawings\00S-ba-002.dgn Printed By: zseiglem Date: 9/4/2015 4:08:03 PM
Model: Default

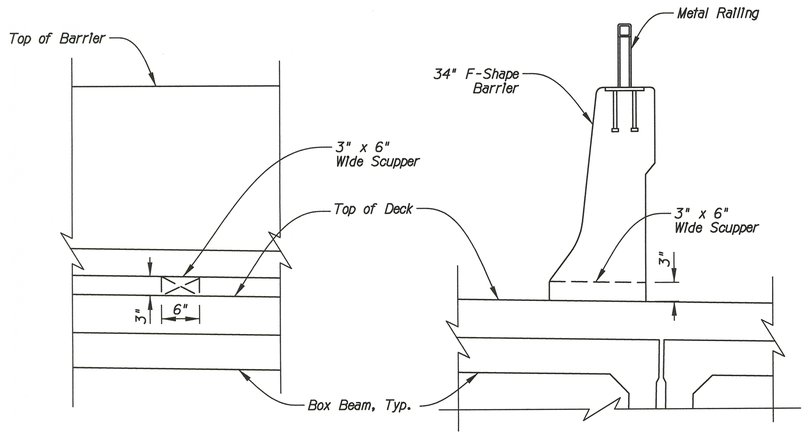

ELEVATION

SECTION

Notes:

1. Scuppers shall be placed at third points along each span.
2. Scupper locations shall be adjusted to occur between the barrier reinforcing dowels that extend from the box beams.

DETAIL - BARRIER SCUPPER (1)

Scale 1"=1'-0"

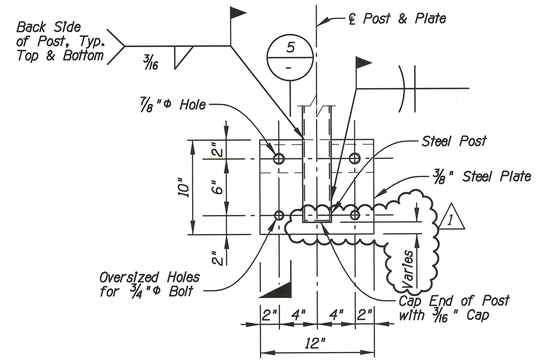

DETAIL - POST CONNECTION PLATE (3)

Scale 1 1/2"=1'-0"

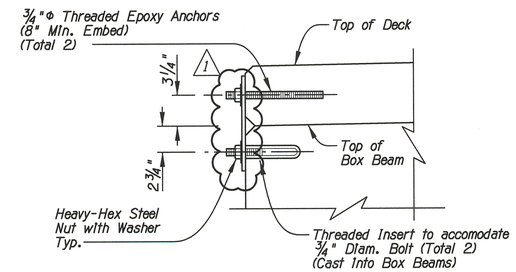

DETAIL - CONNECTION PLATE INSTALLATION (5)

Scale 1 1/2"=1'-0"

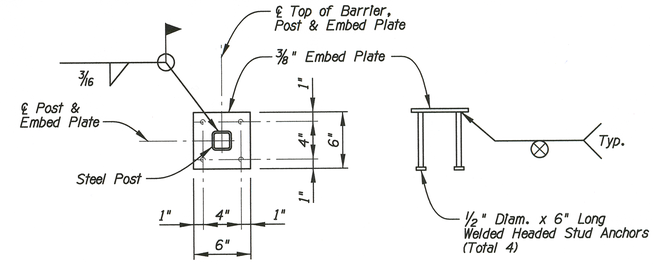

DETAIL - EMBED PLATE (4)

Scale 1 1/2"=1'-0"

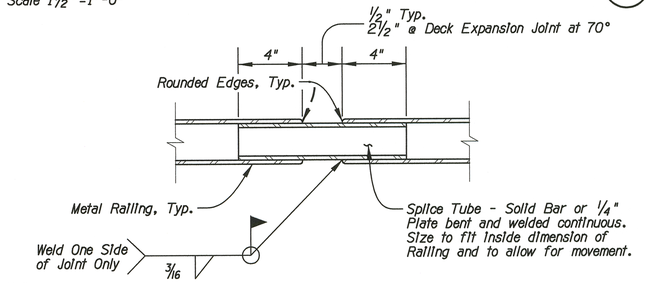

Notes:

1. Provide 2 1/2" Expansion Joint within length of Railing that crosses over Bridge Deck Expansion Joint, Typical.
2. Provide 1/2" Expansion Joints within Railing that crosses over ℄ Pier, Typical and at 40'-0" maximum spacing.
3. All exposed edges shall be ground smooth.
4. Joints in Intermediate rails shall align vertically.

DETAIL - RAILING EXPANSION JOINT (6)

No Scale

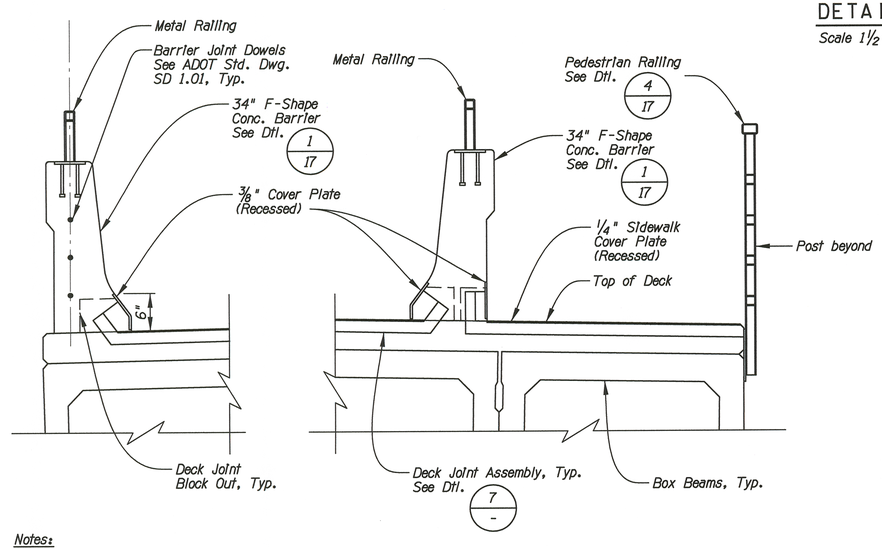

Notes:

1. Cover Plates to be ASTM A36 steel and galvanized in accordance with ASTM A123.
2. Contractor to coordinate dimensions with Deck Joint requirements.
3. Contractor to submit Cover Plate shop drawings within the Deck Joint Shop Drawings for review by Engineer prior to fabrication.
4. See ADOT Std. Dwg. SD 3.02 for Cover Plate details not shown or noted.

SECTION AT DECK JOINT (2)

No Scale

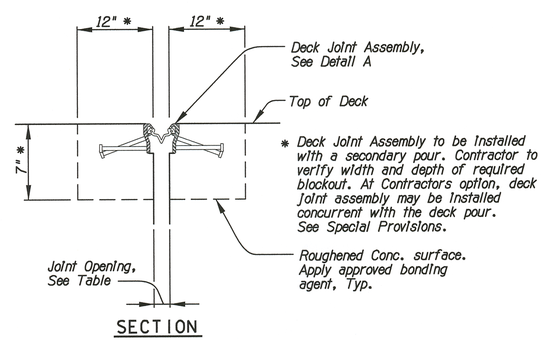

SECTION

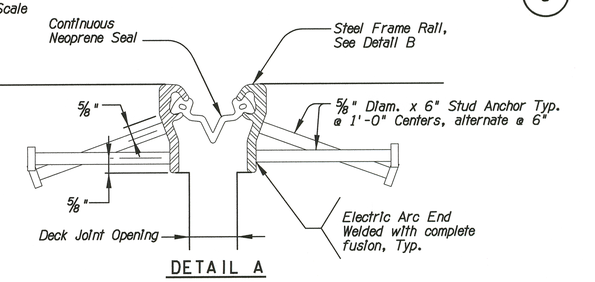

DETAIL A

Deck Joint Opening Table								
T (°F) @ Installation	100	90	80	70	60	50	40	30
Deck Jt. (In)	1 5/8"	1 3/4"	1 7/8"	1 7/8"	2"	2 1/8"	2 1/8"	2 1/4"

Deck Joint Notes:

1. Contractor shall provide strip seal deck joint with retainer rails as shown in this detail and as specified in the Special Provisions. References to ADOT Standard Drawing SD 3.02 are only for similar details not shown in these plans such as recessed sidewalk and barrier cover plates and weld detail at retainer rail splices.
2. Contractor shall provide elastomeric strip seal deck joint assemblies with a 4" movement capacity at abutments and Pier 4.
3. The strip seal shall be supplied continuous full length without splices.
4. Joints shall be watertight on the deck.
5. Joint seals shall be removable and replaceable with minimum interruption to traffic.
6. Retainer rails shall be supplied in the maximum length practical consistent with normal manufactured length of the rail. Rail splices and miter cut joints at angle points in edge of deck and abutment backwalls shall be welded per Detail E of ADOT Standard Drawing SD 3.02.
7. See Special Provisions for additional requirements.

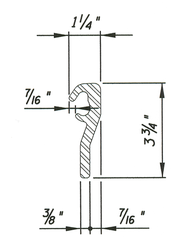

DETAIL B

DECK JOINT DETAIL (7)

No Scale

Scales	Horiz.	Sheet 18 of 23	Page of
	Vert.		

Priscilla S. Cornelio, P.E., Director

No.	Revision Description	Engineer	Date
1	Connection Plate Length	TWB	9/14/15

		Date
Designed	ZDS	8/14/15
Drawn	ZDS	8/14/15
Checked	JAC	8/14/15
Proj. Engr.	TWB	8/14/15

Registered Professional Engineer (Civil) CERTIFICATE NO. 29368 TED W. BUELL Date Signed 9-14-15 ARIZONA U.S.A. Expires 09-30-2017

Pima County Department of Transportation

DECK JOINT AND MISCELLANEOUS DETAILS ELEPHANT HEAD ROAD BRIDGE OVER THE SANTA CRUZ RIVER PROJECT NO. 4RTEHB

Elephant Head Road Bridge - Over the Santa Cruz River - Project No. 4RTEHB

Pentable: plotard.tbl
Plotdriver: COTPMpdf_V8full_B&W.plt

Project ID: 0000000025856 2
Client Number: 012145