PIMA COUNTY

PROCUREMENT DEPARTMENT

DESIGN & CONSTRUCTION DIVISION • 130 W. CONGRESS STREET, 3RD FLOOR • TUCSON, ARIZONA 85701-1317
TELEPHONE (520) 724-3731 • FAX (520) 724-4434

January 14, 2016

ADDENDUM NO. 5

SOLICITATION NO. 202583 – SUNSET ROAD: SILVERBELL ROAD TO INTERSTATE 10

This Addendum addresses question raised from January 12th, thru January 13th, 5:00 pm. This Addendum shall be incorporated and made part of the Bid Documents as though included therein. **This addendum is 22 pages.**

BID DATE:

The bid date of January 19, 2016 at or before 2:00 p.m. local Tucson time remains unchanged.

QUESTIONS/CLARIFICATIONS/REQUESTS FOR INFORMATION:

Q) What is the correct bid items to use for TEP facilities?
A) The TEP work effort associated with this project is eliminated. Please see Attachment 1 (15 pages) for the pages impacted by the elimination of the TEP facilities.

Q) Contractor cannot find bid item or information for 4" ITS across bridge and supports.
A) 4" ITS across bridge is in Combination Pedestrian-Traffic Bridge Railing. See Sheet S23-Page 92. Attachment 2 (1 page)

Q) Plan Sheet 20 shows Gabion Baskets (Bid Item 9130005) with a staking table giving dimensions of the slopes and a bottom that varies. Gabions Baskets come in lengths such as 3', 6', and 9' and do not fit the staking table for the slopes or the bottom of channel or the lengths given in the Gabion Check Dam Table. If the dimensions given are to be considered a minimum will the pay item include full payment for the CY of Gabions installed?
A) The "Staking Table" relates to the grading of the channel between gabion check dams. The "Gabion Check Dam Table" on the same Sheet RD12_Page20 show the gabion lengths, thickness and quantities that are in 3' increments. Please see Attachment 5 (2 pages)

Q) Typically removal of asphalt paving by milling is a separate pay item. Is it to be paid for under the removal of structures and obstructions?
A) See Note 9 and Removal Items #8, Sheet PP07_Page 34 and . All removals shall be paid under Bid Item No. 2020001, Removal of Structures & Obstructions.

Q) Will the irrigation hangers be paid for under Items 9230060 / 9230080?
A) Hangers and brackets, including threaded inserts in bridge are included in bid item 8080001 "LANDSCAPE IRRIGATION SYSTEM." Please refer to "SECTION 808-206.1(I) High Density Polyethylene Pipe and Fittings" on page SP-142 of the Special Provisions.

Q) If Bid Item #9260001 - Engineer's Field Office is required for this project, What are your requirements for it?
A) Requirements for Bid Item #9260001 - Engineer's Field Office is in Section 926, the Pima Association of Governments (PAG), Standard Specifications for Public Improvements, 2014 Edition. (http://apps.pagnet.org/standardspecifications/)

Q) The plans that we have on sheet 71 of 203, S02, show the WAPA lines at an elevation of 2250.9'. Please confirm that the actual is the 2255.1 as listed in addendum #4.

A) Elevations shown on Sheet PP02_Page 29 are as surveyed on August 17, 2015. Lowest line surveyed is 2254.6. Sheet S07_Page 71 has been revised accordingly. Attachment 3 (1 page)

Q) Drilled shafts 1, 2 and 3 show a total length of 131.75' each. However, when the tip elevation and top elevation are subtracted there length is 116.75'. Please advise.

A) The length shown on the plans should be as stated, 116.75'. Attachment 4 (1 page)

All other requirements and terms of the Solicitation remain unchanged. Any bid that fails to acknowledge any addendum that directly affects cost, scope, or schedule will be rejected as non-responsive.

All questions shall be addressed in writing to Matt Sage, Commodity/Contracts Officer, email matthew.sage@pima.gov or fax number 520-724-4434. Please submit them no later than January 14, 2016. Questions submitted after this date may not be addressed.

/s/Matthew T. Sage

Matthew T. Sage – Commodity/Contracts Officer

SUNSET ROAD

SILVERBELL ROAD TO INTERSTATE 10

PIMA COUNTY
TRANSPORTATION

GENERAL DESCRIPTION OF PROJECT

CONSTRUCTION OF 0.64 MILES OF NEW ROADWAY INCLUDING BRIDGE OVER SANTA CRUZ RIVER, A NEW TRAFFIC SIGNALIZED INTERSECTION AT SILVERBELL AND SUNSET, A SHARED USE PATH ON THE SOUTH SIDE OF THE ROADWAY AND AN ASPHALTIC CONCRETE SIDEWALK ON THE NORTH SIDE OF THE ROADWAY.

PROJECT NUMBER
4RTSUN

PIMA COUNTY BOARD OF SUPERVISORS

SHARON BRONSON, CHAIR, DISTRICT 3

ALLY MILLER, DISTRICT 1 RAY CARROLL, DISTRICT 4

RAMON VALADEZ, DISTRICT 2 RICHARD ELIAS, DISTRICT 5

THIS PROJECT IS LOCATED WITHIN SUPERVISOR DISTRICT 1

SHEET INDEX

PAGE NO.	SHT TYPE	DESCRIPTION
1	CS01	COVER SHEET
2	GN01	GENERAL NOTES SHEET
3	GN02	EARTHWORK NOTES SHEET
4	TYP01	PAVEMENT STRUCTURAL SECTIONS SHEET
5-6	TYP02-TYP03	TYPICAL SECTIONS SHEETS
7	SB01	BARRIER SUMMARY SHEET
8	SB02	PIPE & CATCH BASIN SUMMARY SHEET
9-23	RD01-RD15	DETAILS SHEETS
24	HC01	HORIZONTAL CONTROL SHEET
25-27	EN01-EN03	PRESERVATION FENCING SHEETS
28-39	PP01-PP12	ROADWAY PLAN & PROFILE SHEETS
40-41	ST01-ST02	GEOMETRIC DATA & STAKING SHEETS
42-44	SD01-SD03	STORM DRAIN PLAN & PROFILE SHEETS
45-50	CD01-CD06	CROSS DRAINAGE PLAN & PROFILE SHEETS
51-59	PM01-PM09	PAVEMENT MARKING/SIGNING SHEETS
60-63	TS01-TS04	TRAFFIC SIGNAL SHEETS
64-65	IT01-IT02	ITS SYSTEM SHEETS
66-69	RW01-RW04	RETAINING WALL SHEETS
70-112	S01-S43	SANTA CRUZ RIVER BRIDGE SHEETS
113-120	SF01-SF08	FOUNDATION DATA SHEETS
121-133	SD1.01-SD7.01	ADOT STRUCTURE DETAIL DRAWINGS
134-146	EC01-ECD07	EROSION CONTROL SHEETS
147-172	LS01-LD02	PLANTING SHEETS
173-191	IRS01-IRD05	IRRIGATION SHEETS
192	WE01	ELECTRICAL FOR IRRIGATION
193-196	W1-W4	WATER MODIFICATION SHEETS
197-203	~~TEP1-TEP7~~	~~TEP UNDERGROUND DISTRIBUTION SYSTEM~~ N.I.C. 1
NOT IN CONTRACT		RIGHT-OF-WAY PLANS
		CROSS SECTIONS

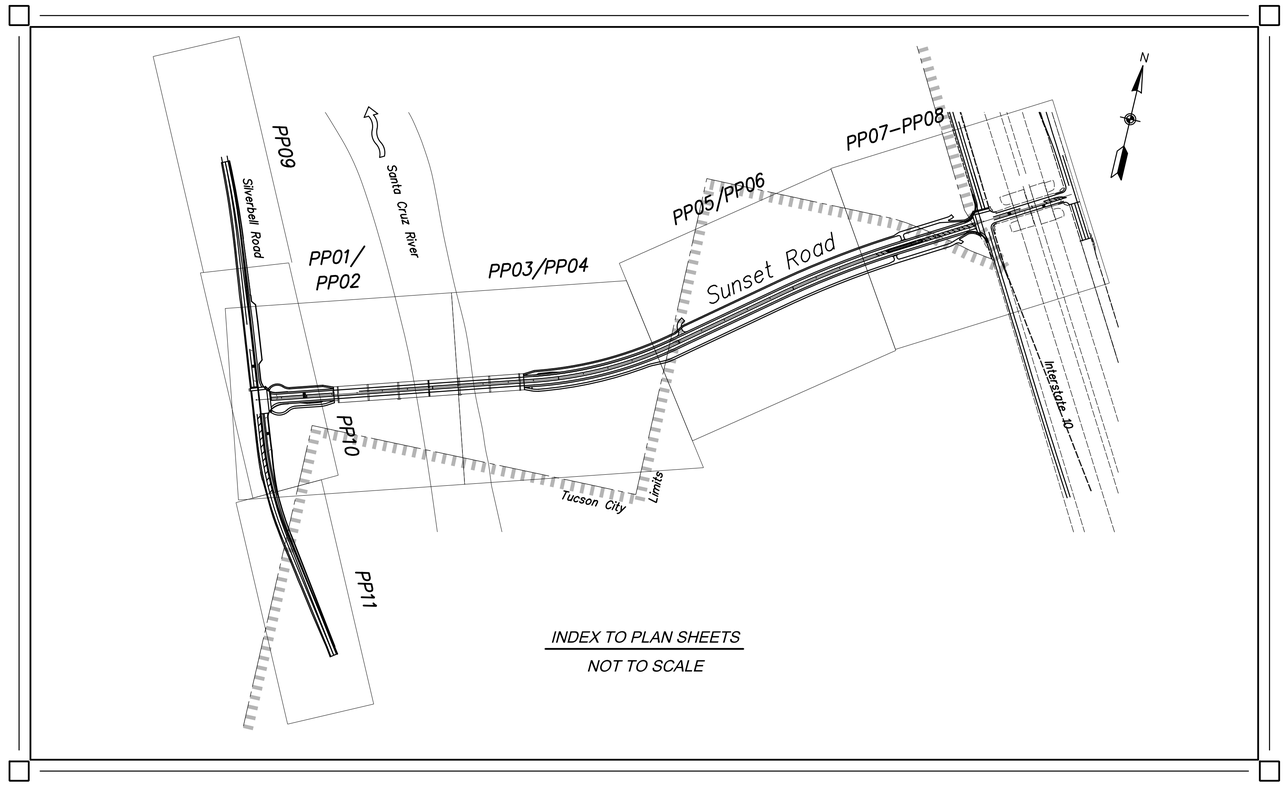

INDEX TO PLAN SHEETS
NOT TO SCALE

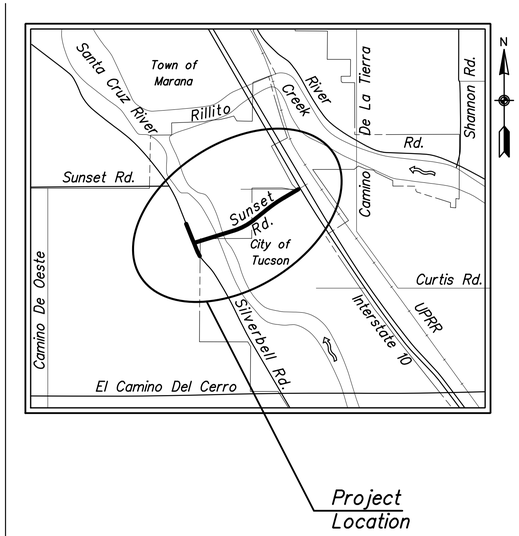

Location Map
NOT TO SCALE

Sections 8, 17, 18
T-13-S, R-13-E
G & S R & M
Pima County, Arizona

UPC-2014-060

Pima County Department of Transportation
201 N. Stone Ave. 4th floor Tucson, Arizona 85701
Phone Number: 724-6410
Priscilla S. Cornelio, P.E. Director

Call at least two full working days before you begin excavation.
ARIZONA 811
Arizona Blue Stake, Inc.
Dial 8-1-1 or 1-800-STAKE-IT (782-5348)
In Maricopa County: (602) 263-1100

Structural Grace, Inc
1430 E. Fort Lowell Rd., Ste. 200, Tucson, AZ 85719 (520) 320-0156

No.	Revisions	Engineer	Date
1	Removed TEP	JWG	1/11/16

No.	As Built	Engineer	Date

Registered Professional Engineer (Civil) 19227 JAMES W. GLOCK Date Signed 1/11/16 ARIZONA, U.S.A. Expires 12/31/17

Reviewed by	Engineer	Date
Mgr. Trans Engr.		
Mgr. Traffic Engr.		
Mgr. Field Engr.		
Mgr. WWM		

Approved: _____20__
Director

Project No. 4RTSUN

Sheet No. CS01 of CS01 | Page No. 1 of 203

W:\Jobs\2013\1326.01_Sunset_PDS\1326.01_Working\1326_Sunset_00_FC1_Rev 1.dgn
1/11/2016 4:15:23 PM
Sunset Road - Silverbell Road to I-10 - Project No. 4RTSUN

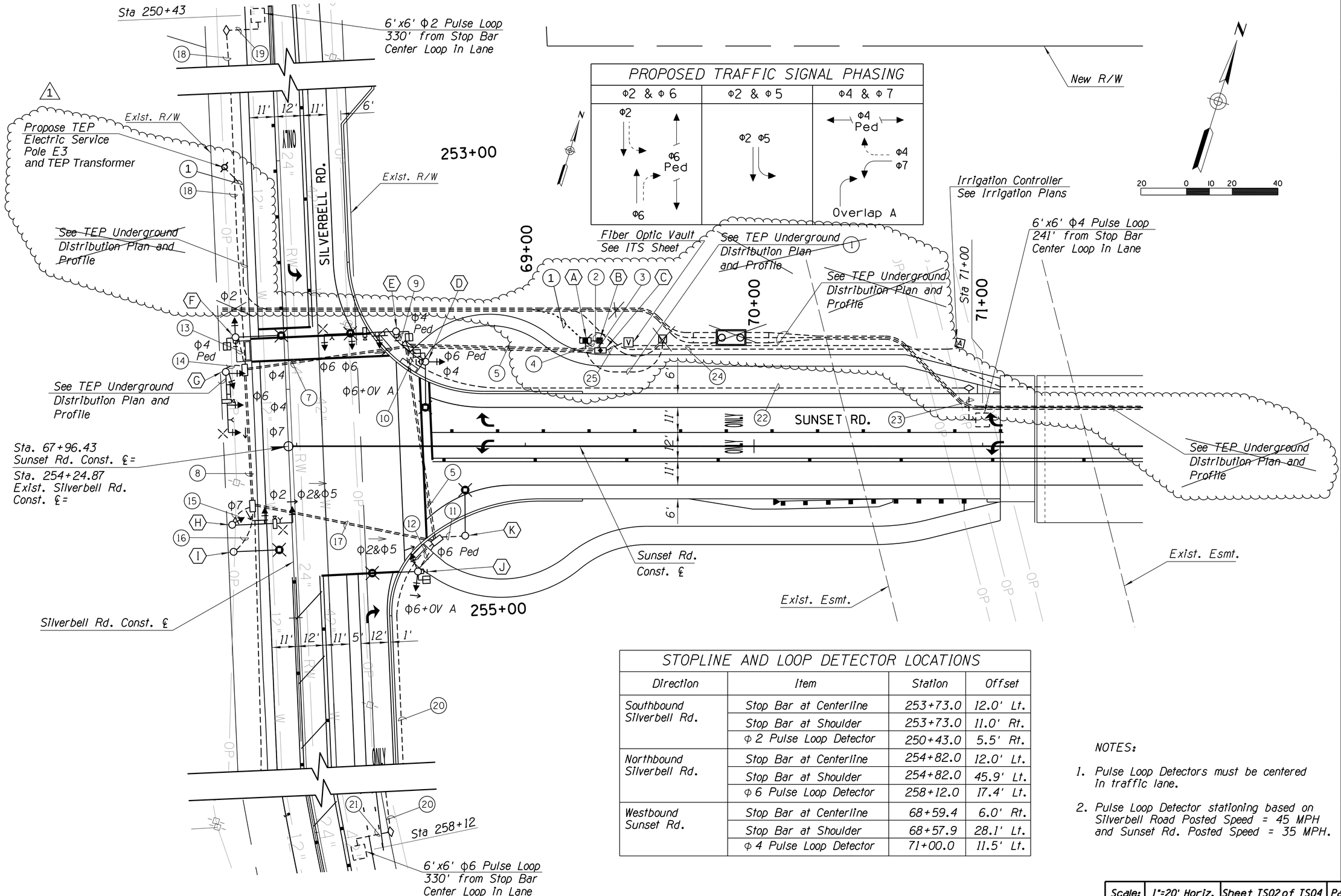

STOPLINE AND LOOP DETECTOR LOCATIONS

Direction	Item	Station	Offset
Southbound Silverbell Rd.	Stop Bar at Centerline	253+73.0	12.0' Lt.
	Stop Bar at Shoulder	253+73.0	11.0' Rt.
	Φ 2 Pulse Loop Detector	250+43.0	5.5' Rt.
Northbound Silverbell Rd.	Stop Bar at Centerline	254+82.0	12.0' Lt.
	Stop Bar at Shoulder	254+82.0	45.9' Lt.
	Φ 6 Pulse Loop Detector	258+12.0	17.4' Lt.
Westbound Sunset Rd.	Stop Bar at Centerline	68+59.4	6.0' Rt.
	Stop Bar at Shoulder	68+57.9	28.1' Lt.
	Φ 4 Pulse Loop Detector	71+00.0	11.5' Lt.

NOTES:

1. Pulse Loop Detectors must be centered in traffic lane.
2. Pulse Loop Detector stationing based on Silverbell Road Posted Speed = 45 MPH and Sunset Rd. Posted Speed = 35 MPH.

Priscilla S. Cornelio, P.E., Director

		Date
Designed	JAV	11/15
Drawn	CPC	11/15
Checked	JJK	11/15
Proj. Engr.	JAV	11/15

No.	Revision Description	Engineer	Date
1	Removal of TEP project work	J. Vaskovic	1/11/16

EXPIRES 09/30/2016

PARSONS BRINCKERHOFF
177 N. CHURCH AVE., STE. 610
TUCSON, AZ. 85701
(520) 882-6424

Arizona Blue Stake 1-800-STAKE-IT 1-800-782-5348

Pima County Department of Transportation

TRAFFIC SIGNAL PLAN
SUNSET ROAD - SEGMENT I
SILVERBELL RD. TO I-10

PROJECT NO. 4RTSUN

SUNSET ROAD – SILVERBELL ROAD TO I-10 – PROJECT NO. 4RTSUN

Scale:	1"=20' Horiz.	Sheet TS02 of TS04	Page 61 of 203

FILE NAME: T:\11542C Sunset\Signal\4RTSUN_Signal01.dgn

Thu 12 Nov 2015, 16:51:33

CABINET AND POLE SCHEDULE

TRAFFIC SIGNAL CONTROLLER				REMARKS	LOCATION	STANDARDS
CABINET	TYPE	CONTROLLER	AUX. CONTROLLER			
Ⓐ	MYERS 125 AMP 120/240 V, MEUG 16-125WTB	METERED SERVICE	SINGLE POLE BREAKERS: (1) 30 AMP - SIGNAL (1) 50 AMP - LIGHTING (1) 20 AMP - IRRIGATION	SHARE FOUNDATION W/UPS, FOUNDATION SIZE IS 66"L X 36"W X 24"D	LOCATED BY ENGINEER IN THE FIELD, MIN. 12 FEET BEHIND EDGE OF CURB TO THE STREET SIDE OF FOUNDATION AND MIN. 18 FEET FROM NEAR EDGE OF THROUGH LANE.	T1801
Ⓑ	MYERS BC1280 W/MP 2000E OR ALPHA EQUIVALENT WITH PULL OUT SHELVES	ICBM SNMP CARD & 4 ALPHA CELL 195 GXL BATTERIES		SHARE FOUNDATION W/PEDESTIAL FOUNDATION SIZE IS 66"L X 36"W X 24"D	LOCATED ADJACENT TO ELECTRIC SERVICE PEDESTAL ON A SHARED OR COMMON FOUNDATION WITH SAME MINIMUM CLEARANCES TO CURB OR NEAR EDGE OF THROUGH LANE.	
Ⓒ	NEMA TS2-1-1998 TYPE IV, TS2 SIZE 6 CABINET, W/DETECTOR RACK CONFIGURATION 1 and DUAL DOOR	NEMA TS2 TYPE 2, ECONOLITE MODEL COBALT OR EQUAL	16 CHANNEL MMU, RACK MOUNTED LOOP DETECTORS, NEMA SOLID STATE LOAD SWITCHES, VIDEO DETECTION, A 3 POLE STREET LIGHTING CONTACTOR, (3) 20 AMP CIRCUIT BREAKERS, 3 CHANNEL AMPLIFIER, AND EVP DISCRIMINATOR		LOCATED BY ENGINEER IN THE FIELD, MIN. 12 FEET BEHIND EDGE OF CURB TO THE STREET SIDE OF FOUNDATION AND MIN. 18 FEET FROM NEAR EDGE OF THROUGH LANE.	T203 T312

POLE		MAST ARM		SIGNALS		LUMINAIRE	PED PB TYPE/SIGN	REMARKS	STATION (Road)	OFFSET	TOP OF FND. ELEV.	STANDARDS
NUMBER	TYPE	SIGNAL	LUMIN	MTG	FACE							
Ⓓ Ⓕ 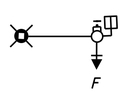	Type 2B	-	-	(1) V (1) XI	(1) F (1) PED	LED, 280 Watt Type III FULL CUTOFF	TYPE I 2" ADA PPB & PPB SIGN R10-3eAZ (R)		Ⓓ 68+56.9 Sunset Rd. Ⓕ 253+76.3 Silverbell Rd.	36.3' LT 21.2' RT	2221.0 2221.4	T 417 T 909 T 418 T 1101 T 445 T 801 T 802 T 803 T 804 T 903
Ⓔ 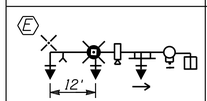	'Q'	30'	20'	(1) XI (3) ASTRO BRAC	(2) F (1) Q (1) PED	LED, 280 Watt Type III FULL CUTOFF	TYPE I 2" ADA PPB & PPB SIGN R10-3eAZ (L)	INSTALL PHOTOCELL ON LUMINAIRE INSTALL CAMERA ON LUMINAIRE MAST ARM INSTALL OPTICOM DETECTOR 711	Ⓔ 68+43.5 Sunset Rd.	50.2' LT	2221.0	T 412 T 909 T 417 T 1101 T 418 T 1901 T 801 T 1902 T 802 T 1903 T 803 T 1905 T 804
Ⓖ 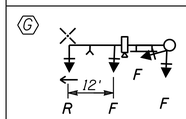	'J'	25'	-	(1) VII (2) ASTRO BRAC	(3) F (1) R W/ARROWS FACING LEFT FOR Φ7	-	-	INSTALL CAMERA W/EXTENSION ON SIGNAL MAST ARM INSTALL OPTICOM DETECTOR 711	Ⓖ 253+91.3 Silverbell Rd.	26.0' RT	2221.9	T 410 T 1901 T 417 T 1902 T 418 T 1903 T 801 T 1905 T 802 T 803 T 903
Ⓗ 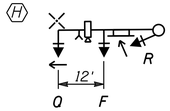	'J'	25'	-	(1) V (2) ASTRO BRAC	(1) F (1) Q (1) R W/ARROWS FACING LEFT FOR Φ7	-	-	INSTALL CAMERA W/EXTENSION ON SIGNAL MAST ARM INSTALL OPTICOM DETECTOR 711	Ⓗ 254+58.1 Silverbell Rd.	26.0' RT	2221.6	T 410 T 1901 T 417 T 1902 T 418 T 1903 T 801 T 1905 T 802 T 803 T 903
Ⓘ Ⓚ 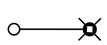	Type 2B	-	-	-	-	LED, 280 Watt Type III FULL CUTOFF	-		Ⓘ 254+70.0 Silverbell Rd. Ⓚ 68+73.7 Sunset Rd.	26.0' RT 39.1' RT	2221.8 2221.0	T 445
Ⓙ 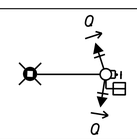	Type 2B	-	-	(1) VII (1) XI	(2) Q (1) PED	LED, 280 Watt Type III FULL CUTOFF	TYPE I 2" ADA PPB & PPB SIGN R10-3eAZ (R)		Ⓙ 68+53.0 Sunset Rd.	54.8' RT	2220.6	T 417 T 909 T 418 T 1101 T 445 T 801 T 802 T 803 T 804 T 905

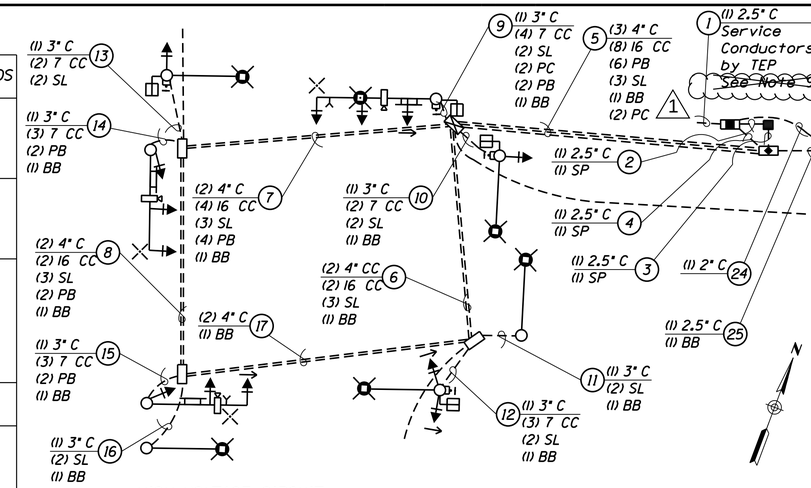

HIGH VOLTAGE CIRCUIT

(X) Y" C	=	Number and Size of Conduit
(X)	=	Number of Cables
#CC	=	#14 IMSA Cable
BB	=	Bare Bond, #8, Solid
PB	=	Pre-Empt Beacon, #14 THW
SP	=	Signal Power (See Detail Sheet)
SL	=	Street Lighting, #10 AWG XHHW
PC	=	Photo Cell, #10 AWG XHHW

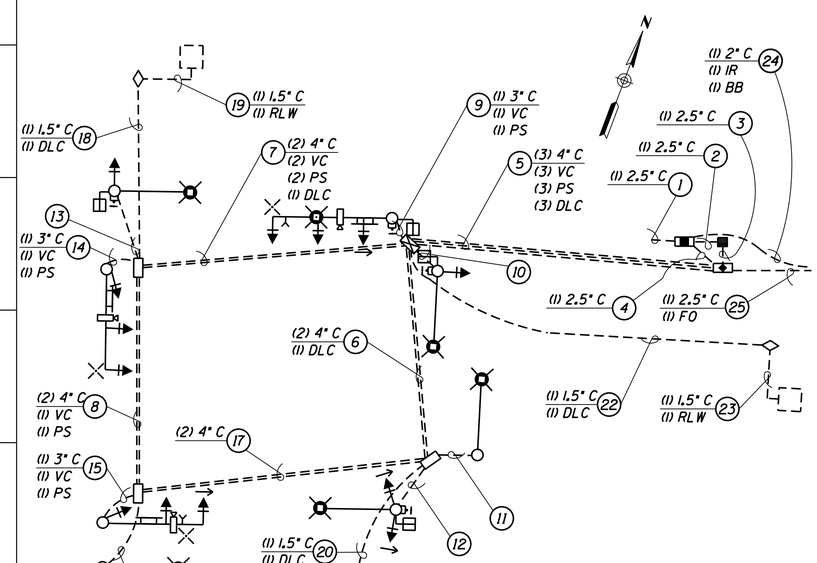

LOW VOLTAGE CIRCUIT

(X) y" C	=	Number and Size of Conduit
(X)	=	Number of Cables
VC	=	Video Detection Cable Econolite Part # 1175-00X
PS	=	Pre-empt Sensor, Opticom #20 3 CC-Shielded Cable (Model 138)
TI	=	Telephone Interconnect, 4CC #20
DLC	=	Detector Lead-In Cable, 16 AWG IMSA 50-2-1984
RLW	=	Roadway Loop Wire, 14 AWG IMSA 51-5-1985.
IR	=	Irrigation
FO	=	Fiber Optic Cable, See (Detail Sheet)

NOTES

1. Astro-Brac mounting assemblies shall be Pelco Astro-Brac part number AS-0116, or equivalent.
2. All luminaires shall have photocell receptacles. All photocell receptacles shall have shorting cap, except for the luminaire with photocell.
3. Pedestrian push button to be at 42 inches above finish grade to center of push button.
4. Furnish and install pedestrian push button sign R10-3eAZ with appropriate arrow per ADOT Manual of Approved Signs.
5. The welded tenon at end of mast arm for Astro-Brac shall be located 6 inches from the tip of mast arm center hole of tenon.
6. PCDOT will contract with Smartwave Technologies, Inc. Under a separate Purchase Order to provide and install PTZ camera and wireless communications device.
7. Refer to this Sheet for the Metro Street Name sign details. Font Shall be Clearview 2.
8. Address for the New Electric Service is 5422 N. Silverbell Road.
9. ~~Electric Service shall be to TEP supplied transformer. See TEP Underground Distribution Plan and Profile.~~

1

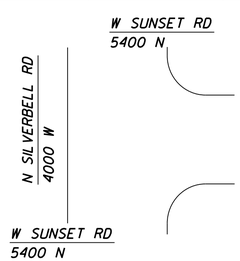

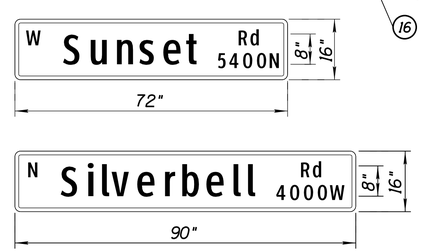

METRO SIGN DETAILS

Scale:	N/A	Sheet TS03 of TS04	Page 62 of 203

Pima County Department of Transportation

POLE AND CONDUCTOR SCHEDULE
SUNSET ROAD - SEGMENT 1
SILVERBELL RD. TO I-10

PROJECT NO. 4RTSUN

PARSONS BRINCKERHOFF
177 N. CHURCH AVE., STE. 610
TUCSON, AZ. 85701
(520) 882-6424

Arizona Blue Stake
1-800-STAKE-IT
1-800-782-5348

Priscilla S. Cornelio, P.E., Director

Designed	JAV	11/15
Drawn	CPC	11/15
Checked	JJK	11/15
Proj. Engr.	JAV	11/15

No.	Revision Description	Engineer	Date
1	Removal of TEP project work	J. Vaskovic	1/11/16

EXPIRES 09/30/2016

SUNSET ROAD - SILVERBELL ROAD TO I-10 - PROJECT NO. 4RTSUN

FILE NAME: T:\11542C Sunset\Signal\4RTSUN_pole&cond sched.dgn

Fri 13 Nov 2015, 09:50:13

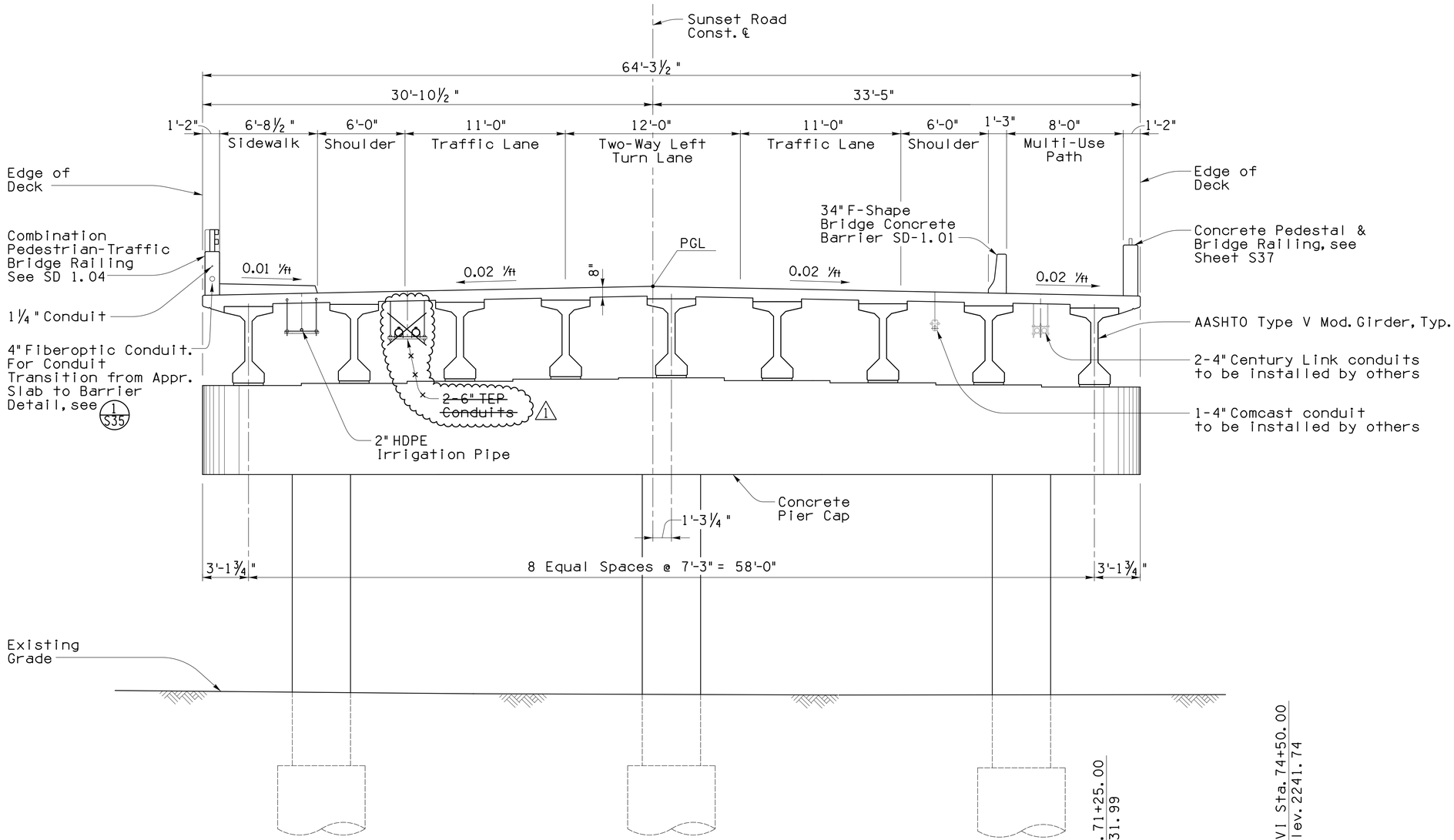

TYPICAL SECTION
¼" = 1'-0"

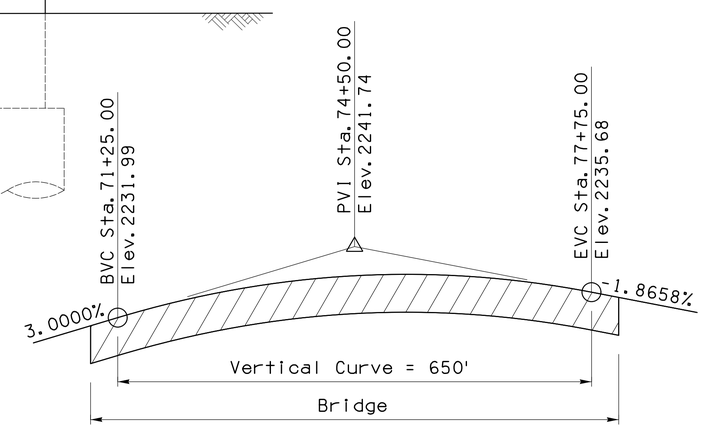

PROFILE GRADE
No Scale

Priscilla S. Cornello, P.E., Director

		Date
Designed	JAM	11/15
Drawn	JRS, MJL	11/15
Checked	CGP	11/15
Proj. Engr.	JAM	11/15

No.	Revision Description	Engineer	Date
1	TEP Utility Line Deleted	J. Montoya	1/11/16

Structural Grace, Inc
1430 E. Fort Lowell Rd., Ste. 200, Tucson, AZ 85719 (520) 320-0156

Call at least two full working days Before you begin excavation. ARIZONA811 Blue Stake, Inc. (602) 263-1100 (520) 623-1065 (928) 526-1065 (928) 763-1065

Pima County Department of Transportation

TYPICAL SECTION & PROFILE GRADE
SUNSET ROAD - SEGMENT 1
SILVERBELL RD. TO I-10
PROJECT NO. 4RTSUN

SUNSET ROAD - SILVERBELL ROAD TO I-10 - PROJECT NO. 4RTSUN

Scale:	As Noted	Sheet S04 of S43	Page 73 of 203

FILE NAME: W:\Jobs\2013\1326.01_Sunset_PDS\1326.01_Working\1326_Sunset_S04_XS1_Rev 1.dgn DATE: 1/12/2016 TIME: 11:39:10 AM JSmitley

APPROXIMATE QUANTITIES

ITEM#	ITEM DESCRIPTION	UNIT	ABUT. 1	ABUT. 2	Pier 1	Pier 2	Pier 3	Pier 4	Pier 5	SUPERSTRUCTURE	TOTALS	AS-BUILT
6010003	Structural Concrete (Class S)(f'c = 3,500 psi)	CY	302	205							507	
6010005	Structural Concrete (Class S)(f'c = 4,500 psi)	CY			101	104	117	108	99		529	
6010016	Structural Concrete (Class X)(f'c = 4,500 psi)	CY								1,702	1,702	
6010660	Concrete Bridge Parapet	LF								195	195	
6011132	Comb. Pedestrian Traffic Bridge Railing (SD 1.04)	LF								755	755	
6011140	F-Shape Concrete Barrier and Transition (34")	LF								755	755	
6011349	Deck Joint Assembly (5" X 5" Compression Seals)	LF	64	64			64			192	192	
6011371	Approach Slab (SD 2.01)	SF								1,929	1,929	
6014907	Precast, Prestressed Concrete Bridge Member (Type V)(Mod.)	LF								6,430	6,430	
6040501	Bridge Railing	LF								561	561	
6050002	Reinforcing Steel	LBS	31,770	20,510	17,290	18,650	20,860	19,310	17,900	385,030	531,320	
6090006	Drilled Shaft (6'-0" diameter)	LF			422	422	399	415	430		2,088	
6090008	Drilled Shaft (8'-0" diameter)	LF	351	414							765	
9230060	Utility Hanger Insert	EA	0	0	0	0	0	0	0	96 ~~144~~	96 ~~144~~ 1	
9230080	Utility Hanger	EA	0	0	0	0	0	0	0	0 ~~48~~	0 ~~48~~	
9230040	Utility Block Out	EA	3 ~~4~~+++	3 ~~4~~+++	3 ~~4~~+	3 ~~4~~+	6 ~~8~~++	3 ~~4~~	3 ~~4~~	36 ~~60~~	60 ~~92~~	
9230232	RGS Conduit 6" (TEP)*	LF								0 ~~1,449~~	0 ~~1,449~~	
9330008	Handrail (Std. Dtl. 105)(Std. Lower Rail Location)	LF	27								27	

Notes:

1. The cost of structural excavation & structure backfill is incidental to other items of work.
2. "*" The cost of expansion sleeves and misc. fittings shall be included in the price per linear feet of conduit.

PER UTILITY QUANTITIES

ITEM#	ITEM DESCRIPTION	UNIT	ABUT. 1	ABUT. 2	Pier 1	Pier 2	Pier 3	Pier 4	Pier 5	SUPERSTRUCTURE	TOTALS
~~TEP~~											
~~9230060~~	~~Utility Hanger Insert++++~~	~~EA~~								~~48~~	~~48~~
~~9230080~~	~~Utility Hanger~~	~~EA~~								~~48~~	~~48~~ 1
~~9230040~~	~~Utility Block Out~~	~~EA~~	~~2+++~~	~~2+++~~	~~2+~~	~~2+~~	~~4++~~	~~2+~~	~~2+~~	~~24~~	~~40~~
Comcast											
9230060	Utility Hanger Insert++++	EA								48	48
9230040	Utility Block Out	EA	1+++	1+++	1+	1+	2++	1+	1+	12	20
Century Link											
9230060	Utility Hanger Insert++++	EA								48	48
9230040	Utility Block Out	EA	1+++	1+++	1+	1+	2++	1+	1+	12	20
Irrigation											
9230040	Utility Block Out	EA	1+++	1+++	1+	1+	2++	1+	1+	12	20

+Expansion joint pier - utility block outs through two diaphragms on each side of joint.

++Pinned/Expansion piers - utility block out through single diaphragm poured monolithically between spans.

+++Includes utility block outs through abutment back wall and pier end diaphragm.

++++See Sheet S25 for Utility Hanger Spacing. Applies to all spans.

Priscilla S. Cornello, P.E., Director

		Date
Designed	JAM	11/15
Drawn	JRS, NUL	11/15
Checked	CGP	11/15
Proj. Engr.	JAM	11/15

No.	Revision Description	Engineer	Date
1	Eliminate TEP	JWC	1/11/16

Structural Grace, Inc
1430 E. Fort Lowell Rd., Ste. 200, Tucson, AZ 85719 (520) 3204156

Call at least two full working days before you begin excavation. Arizona Blue Stake, Inc. ARIZONA811 Dial 8-1-1 or 1-800-STAKE-IT (1-800-782-5348) Maricopa County (602) 263-1069

Pima County Department of Transportation

QUANTITIES
SUNSET ROAD - SEGMENT 1
SILVERBELL RD. TO I-10

PROJECT NO. 4RTSUN

SUNSET ROAD - SILVERBELL ROAD TO I-10 - PROJECT NO. 4RTSUN

Scale: As Noted | Sheet S05 of S43 | Page 74 of 203

FILE NAME: W:\Jobs\2013\1326.01_Sunset_PDS\1326.01_Working\1326_Sunset_S05_QN1_Rev 1.dgn DATE: 1/12/2016 TIME: 9:53:44 AM MLichtenstein

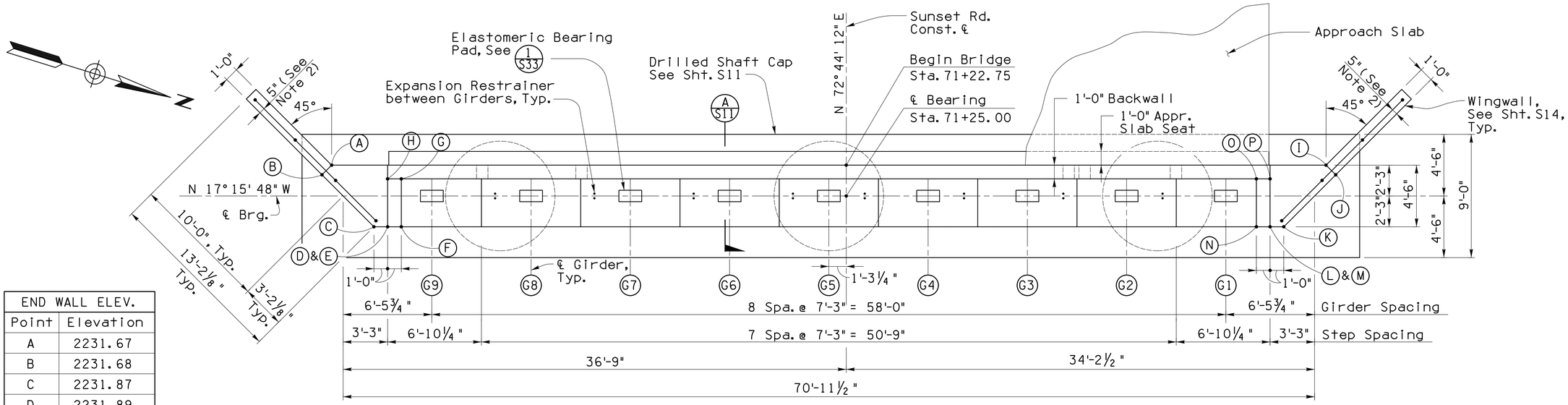

END WALL ELEV.	
Point	Elevation
A	2231.67
B	2231.68
C	2231.87
D	2231.89
E	2230.47
F	2230.13
G	2230.02
H	2230.37
I	2231.72
J	2231.73
K	2231.92
L	2231.94
M	2230.52
N	2230.18
O	2230.07
P	2230.42

PLAN - ABUTMENT 1

1/4" = 1'-0"

Notes:

1. Abutment backwall elevations are shown at front face of backwall.
2. Locate center of handrail 5" from wingwall outside face.

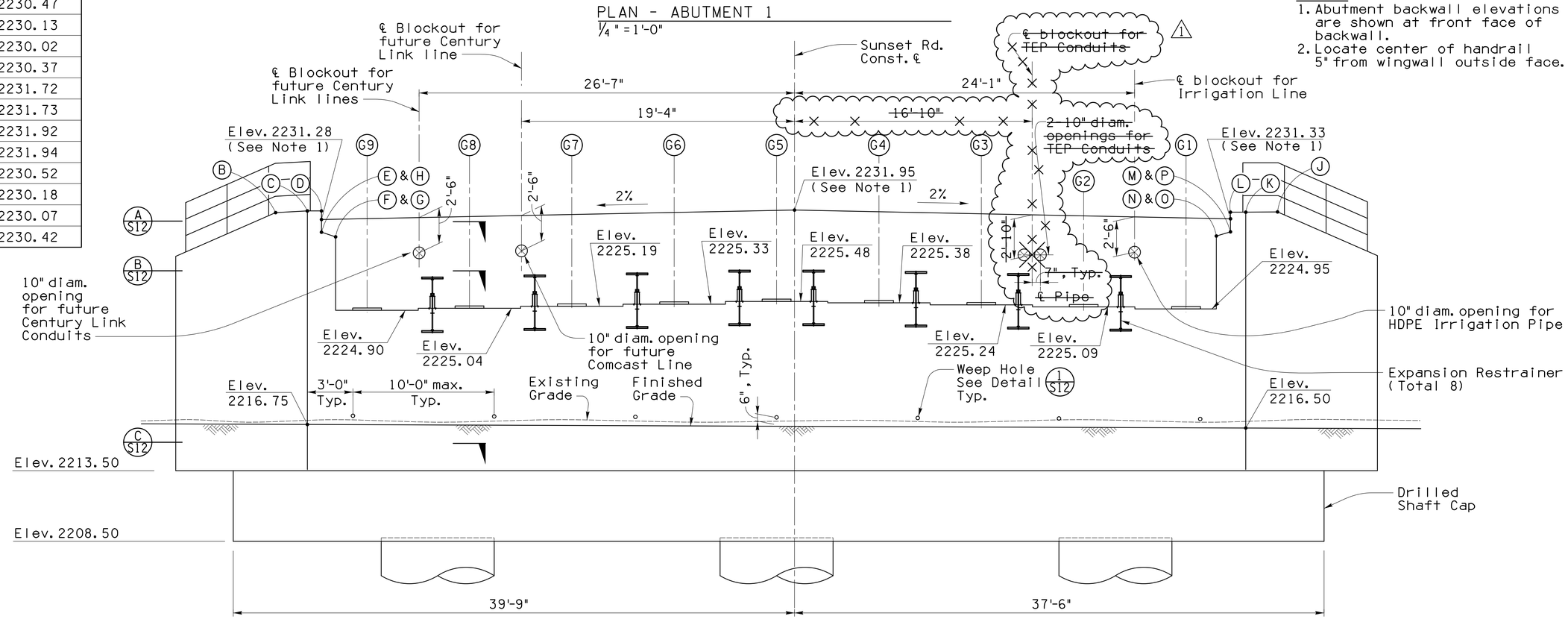

ELEVATION - ABUTMENT 1

1/4" = 1'-0"

Scale:	As Noted	Sheet S09 of S43	Page 78 of 203

Pima County Department of Transportation

Priscilla S. Cornello, P.E., Director

Designed	JAM	11/15
Drawn	JRS, NUL	11/15
Checked	CGP	11/15
Proj. Engr.	JAM	11/15

No.	Revision Description	Engineer	Date
1	TEP Utility Line deleted	J. Montoya	1/11/16

Structural Grace, Inc

1410 E. Fort Lowell Rd., Ste. 200, Tucson, AZ 85719 (520) 320-4156

Call at least two full working days before you begin excavation. Arizona Blue Stake, Inc. ARIZONA811 Dial 8-1-1 or 1-800-782-5348 (in Maricopa County 602) 263-1100

ABUTMENT 1 PLAN & ELEVATION
SUNSET ROAD - SEGMENT 1
SILVERBELL RD. TO I-10

PROJECT NO. 4RTSUN

SUNSET ROAD - SILVERBELL ROAD TO I-10 - PROJECT NO. 4RTSUN

FILE NAME: W:\Jobs\2013\1326.01_Sunset_PDS\1326.01_Working\1326_Sunset_S09_AB1_Rev 1.dgn DATE: 1/12/2016 TIME: 9:56:54 AM JSmitley

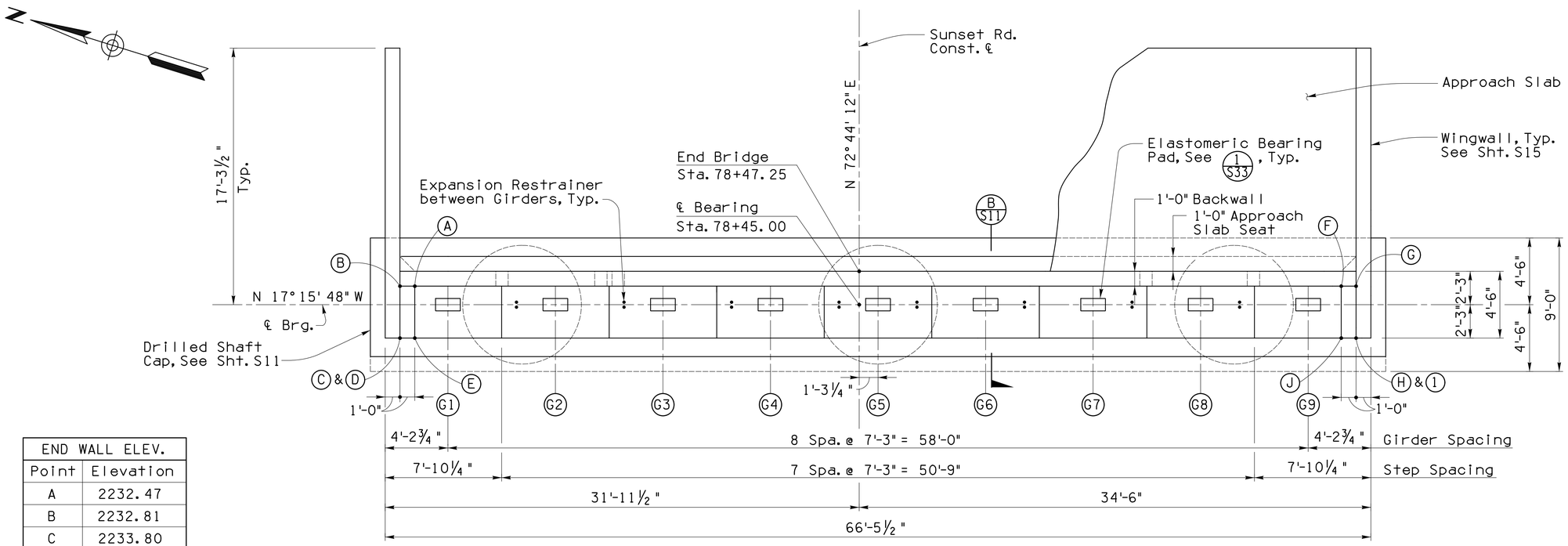

END WALL ELEV.	
Point	Elevation
A	2232.47
B	2232.81
C	2233.80
D	2232.88
E	2232.54
F	2232.42
G	2232.76
H	2233.75
I	2232.83
J	2232.49

PLAN - ABUTMENT 2
¼" = 1'-0"

Note:
1. Abutment backwall elevations are shown at front face of backwall.

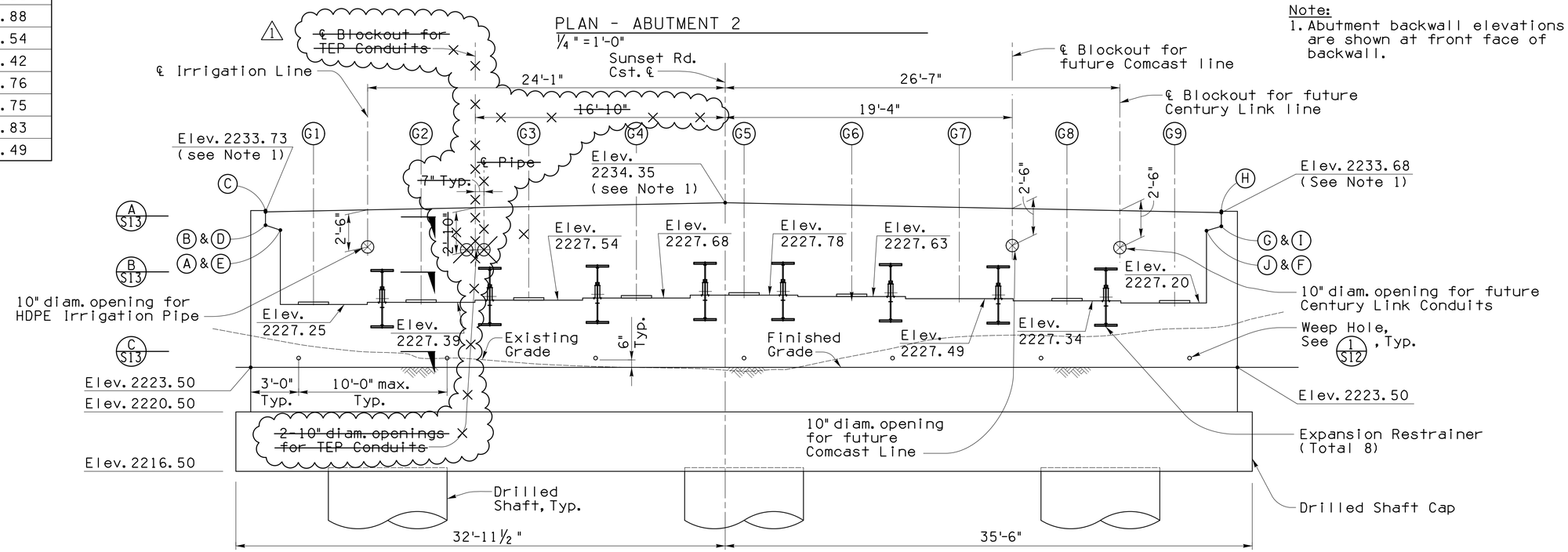

ELEVATION - ABUTMENT 2
¼" = 1'-0"

Scale:	As Noted	Sheet S10 of S43	Page 79 of 203

Pima County Department of Transportation

Priscilla S. Cornello, P.E., Director

Designed	JAM	11/15
Drawn	JHS, NUL	11/15
Checked	CGP	11/15
Proj. Engr.	JAM	11/15

No.	Revision Description	Engineer	Date
1	TEP Utility Line deleted	J. Montoya	1/11/16

Structural Grace, Inc
1430 E. Fort Lowell Rd., Ste. 200, Tucson, AZ 85719 (520) 320-0156

Call at least two full working days before you begin excavation. Arizona Blue Stake, Inc. ARIZONA 811 Dial 8-1-1 or 1-800-STAKE-IT (1-800-782-5348) Maricopa County (602) 263-1069

ABUTMENT 2 PLAN & ELEVATION
SUNSET ROAD - SEGMENT 1
SILVERBELL RD. TO I-10
PROJECT NO. 4RTSUN

SUNSET ROAD - SILVERBELL ROAD TO I-10 - PROJECT NO. 4RTSUN

FILE NAME: W:\Jobs\2013\1326.01_Sunset_PDS\1326.01_Working\1326_Sunset_S10_AB2_Rev 1.dgn DATE: 1/12/2016 TIME: 9:57:49 AM JSmitley

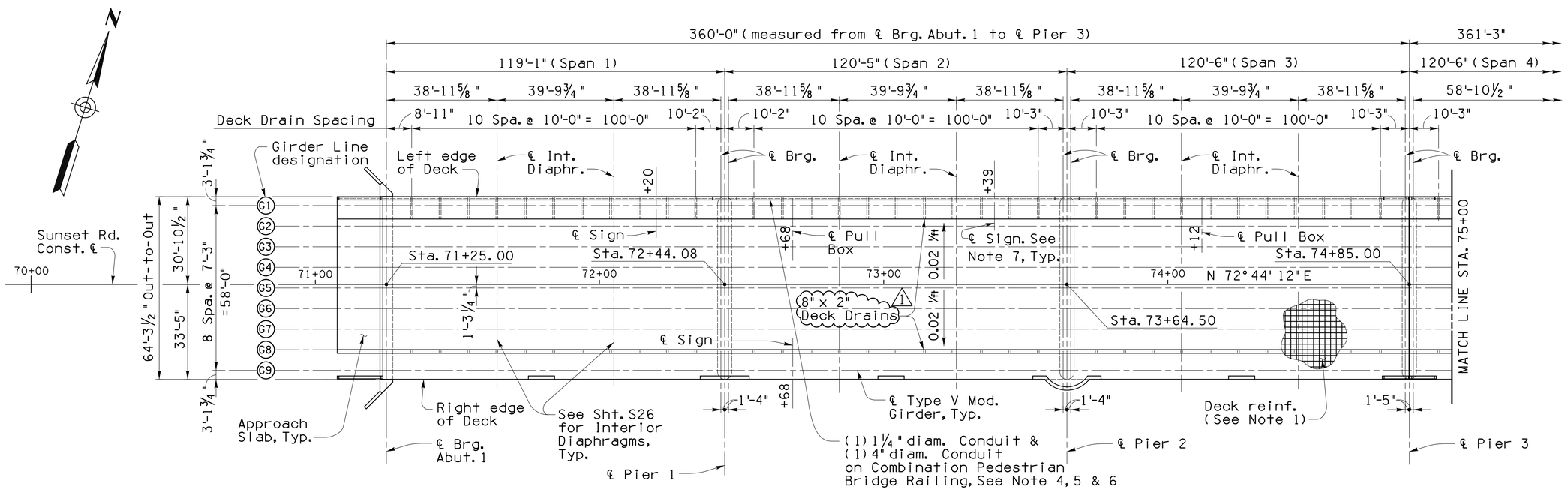

DECK FRAMING PLAN
1" = 20'

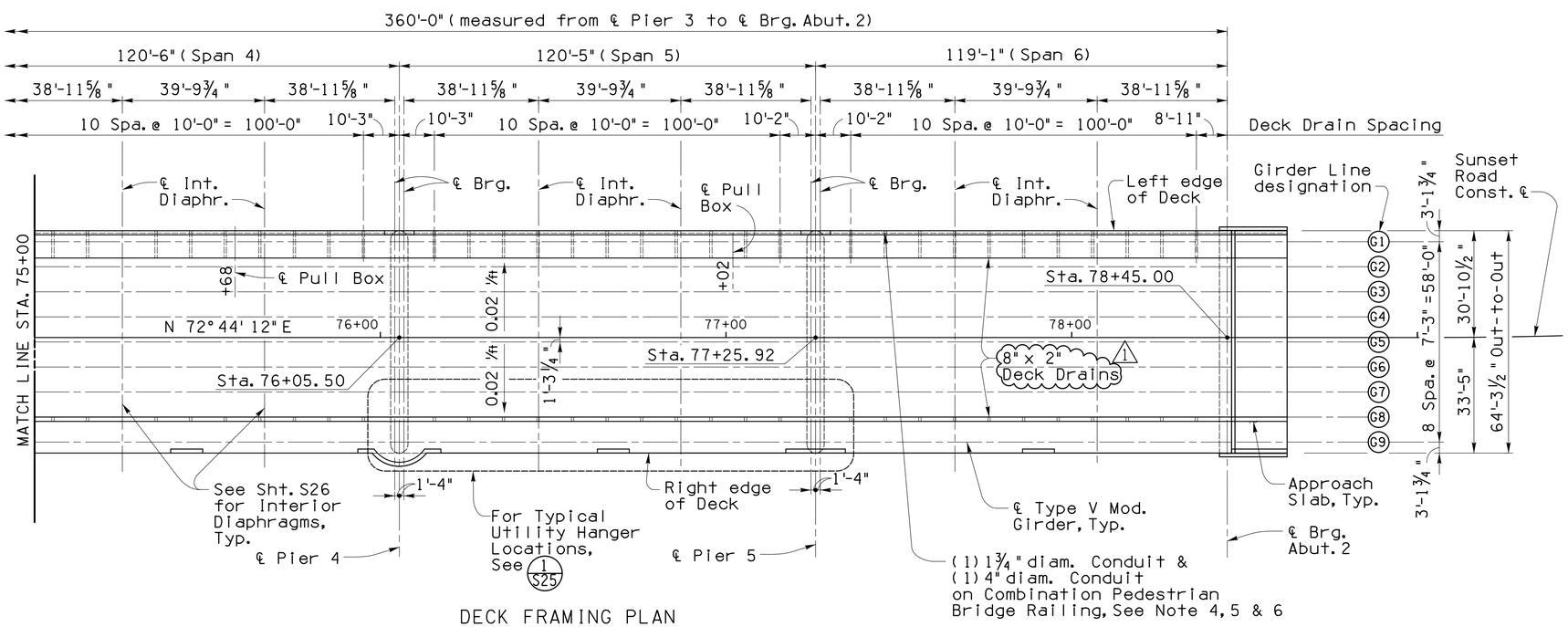

DECK FRAMING PLAN
1" = 20'

Notes:

1. For Deck Reinforcement, see Sheet S23.
2. Transverse Deck Reinforcement shall be placed parallel to ℄ Brg and spaced along PGL.
3. (G1) — Girder Line nomenclature.
4. Concrete Barriers not shown for clarity.
5. Terminate 1¼" Conduit 3' away from the Approach Slab.
6. Provide expansion sleeve for 1¼" & 4" Conduits at every Bridge Expansion Joint.
7. For sign connection detail, see Sheet S35.

Girder Bracing

The Contractor shall provide temporary bracing for the girders immediately after erection to ensure that they remain stable until the permanent intermediate diaphragms are constructed. The temporary bracing must remain in place until the intermediate diaphragms are poured and the concrete has reached the required 28-day strength. The cost of the temporary bracing shall be incidental to the cost of the girders.

Designed	JAM	11/15
Drawn	JRS, MJL	11/15
Checked	CGP	11/15
Proj. Engr.	JAM	11/15

No.	Revision Description	Engineer	Date
1	Deck Drain Dimension	JWC	1/11/16

Structural Grace, Inc
1430 E. Fort Lowell Rd., Ste. 200, Tucson, AZ 85719 (520) 320-0156

Call at least two full working days before you begin excavation. Arizona Blue Stake, Inc. Dial 8-1-1 or 1-800-STAKE-IT (782-5348) Maricopa County (602) 263-1069

Priscilla S. Cornelio, P.E., Director

Pima County Department of Transportation

DECK FRAMING PLAN
SUNSET ROAD - SEGMENT 1
SILVERBELL RD. TO I-10

PROJECT NO. 4RTSUN

SUNSET ROAD - SILVERBELL ROAD TO I-10 - PROJECT NO. 4RTSUN

Scale:	As Noted	Sheet S22 of S43	Page 91 of 203

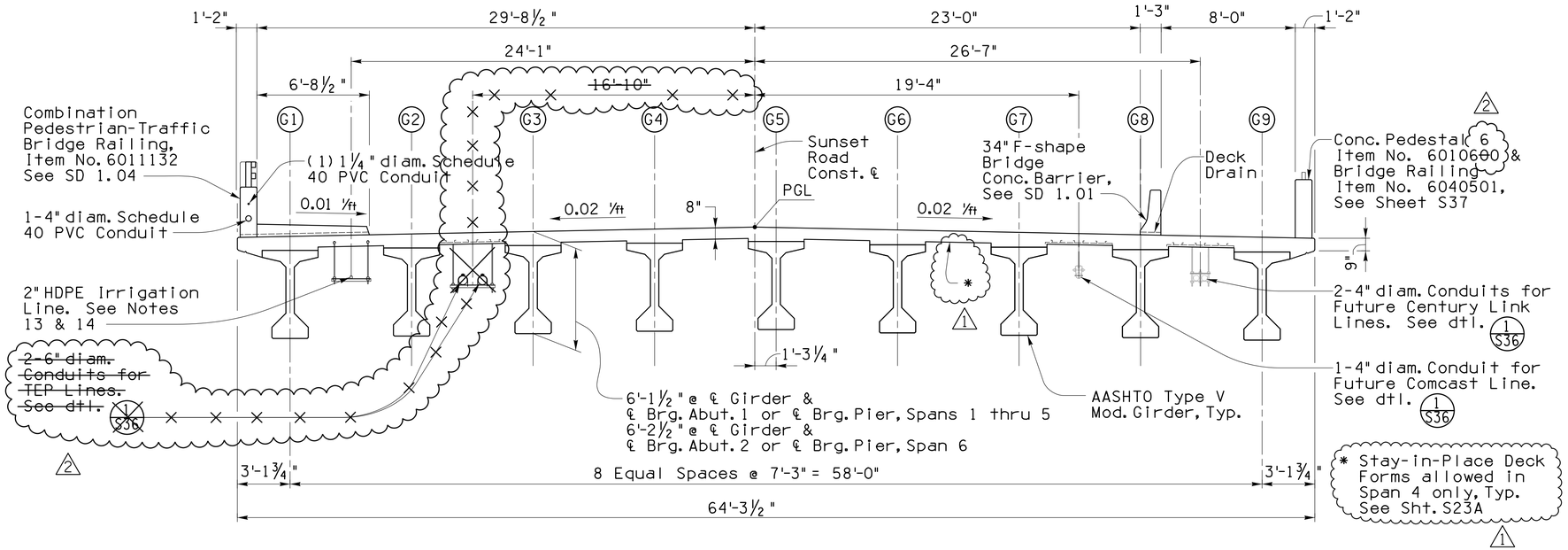

TYPICAL SECTION
¼" = 1'-0"

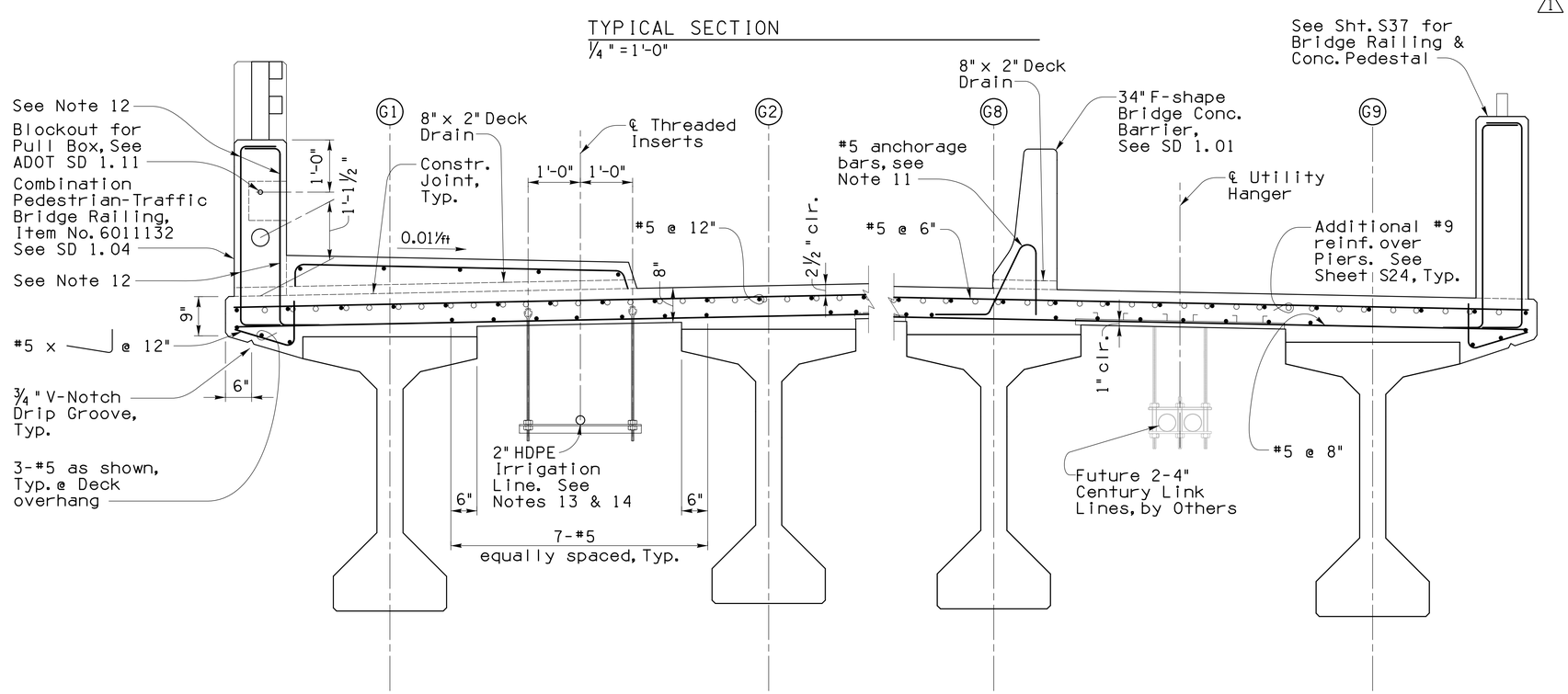

TYPICAL PARTIAL SECTION
¾" = 1'-0"

NOTES:

1. Longitudinal Deck reinforcement shall be placed parallel to ℄ Girder.
2. Transverse Deck reinforcement shall be placed perpendicular to Cst. ℄ with spacing measured along Cst. ℄.
3. Bars shall not be spliced within the required lap length of adjacent bars.
4. Top transverse bars in the Deck Slab shall be spliced where required at mid-span between centerline of Girders.
5. Bottom transverse bars in Deck Slab shall be spliced where required at centerline of Girder.
6. Minimum lap length of bar splices shall be
   #5 bars: 2'-2"
7. Contractor to submit Shop Drawings showing lap splice locations to the Engineer for approval prior to fabrication.
8. Intermediate Diaphragms and expansion Pier Diaphragms shall be poured prior to the Deck pour.
9. Pinned Abutment & Pier Diaphragms shall be poured concurrent with the Deck pour.
10. Contractor shall submit a Deck Pour Schedule to the Engineer for approval prior to placing concrete.
11. For size and spacing of anchorage bars for the 34" F-shape Concrete Bridge Barriers, see SD 1.01. Anchorage bars are included in the linear cost of the concrete Barriers.
12. For size and spacing of reinforcing bars, see SD 1.04.
13. Provide ½" threaded inserts at 42" maximum spacing and at a minimum distance for 24" from face of Abutments, Pier Caps or Interior Diaphragms.
14. For 2" HDPE irrigation line hanger detail, See Irrigation Plans.
15. All cost associated with the construction of the Combination Pedestrian Traffic Bridge Railing, including conduits, pull boxes, sidewalk, railing, dado, anchorage bars and deck drains are included in pay item No. 6011132.
16. ITS and irrigation elec. conduits are incidental to cost of Combination Pedestrian/Traffic Bridge Railing.

Priscilla S. Cornelio, P.E., Director
Pima County Department of Transportation

Designed	JMM	11/15
Drawn	HKS, MJL	11/15
Checked	CGP	11/15
Proj. Engr.	JMM	11/15

No.	Revision Description	Engineer	Date
1	S.I.P., Deck Span 4	C. Perchinelli	1/6/16
2	TEP Line deleted, Item No.	J. Montoya	1/11/16

Structural Grace, Inc
1930 E. Fort Lowell Rd., Ste. 200, Tucson, AZ 85719 (520) 320-0156

Call at least two full working days before you begin excavation. Arizona Blue Stake, Inc. ARIZONA 811 Dial 8-1-1 or 1-800-STAKE-IT (782-5348) Maricopa County (602) 263-1100

TYP. DECK SECTIONS
SUNSET ROAD - SEGMENT 1
SILVERBELL RD. TO I-10
PROJECT NO. 4RTSUN

SUNSET ROAD - SILVERBELL ROAD TO I-10 - PROJECT NO. 4RTSUN

Scale:	As Noted	Sheet S23 of S43	Page 92 of 203

FILE NAME: W:\Jobs\2013\1326.01_Sunset_PDS\1326.01_Working\1326_Sunset_S23_DD1_Rev 2.dgn DATE: 1/12/2016 TIME: 9:44:28 AM JSmitley

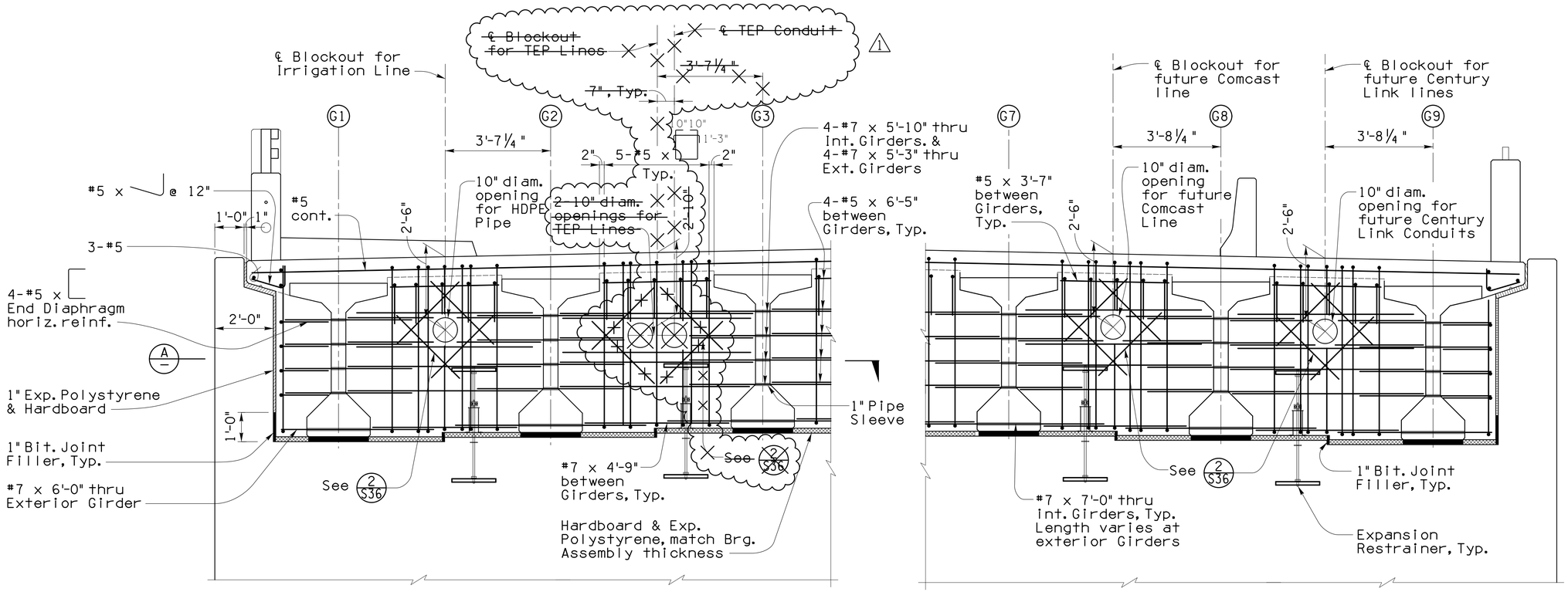

Note: Abutment 2 shown, Abutment 1 similar.

ELEVATION - ABUTMENT DIAPHRAGM

½" = 1'-0"

Note:
Class S concrete may be used for the Abutment Diaphragms.

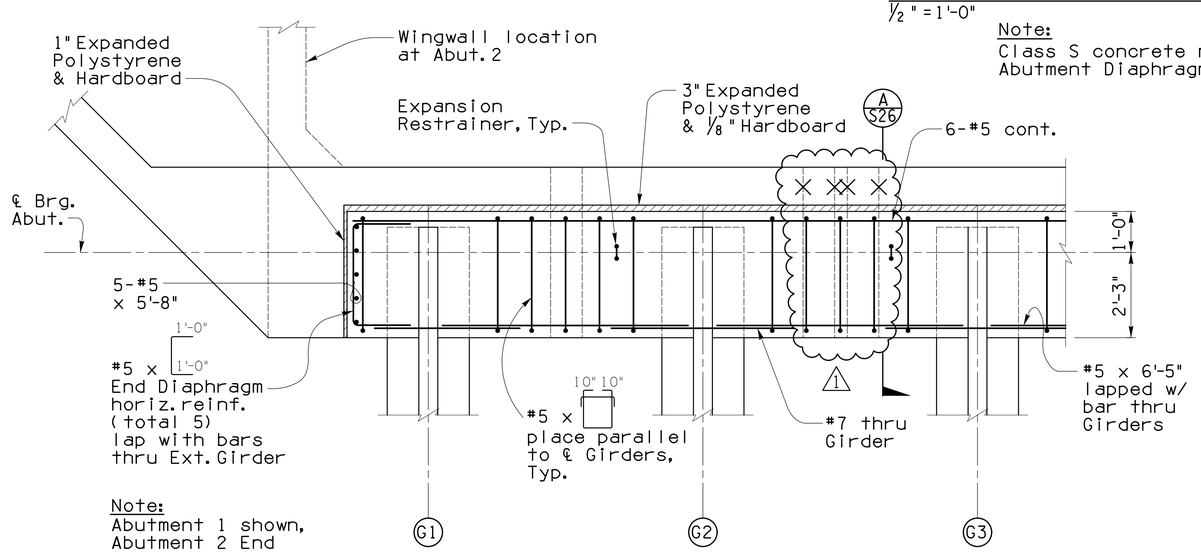

Note:
Abutment 1 shown, Abutment 2 End Diaphragm similar.

SECTION - ABUTMENT DIAPHRAGM

½" = 1'-0"

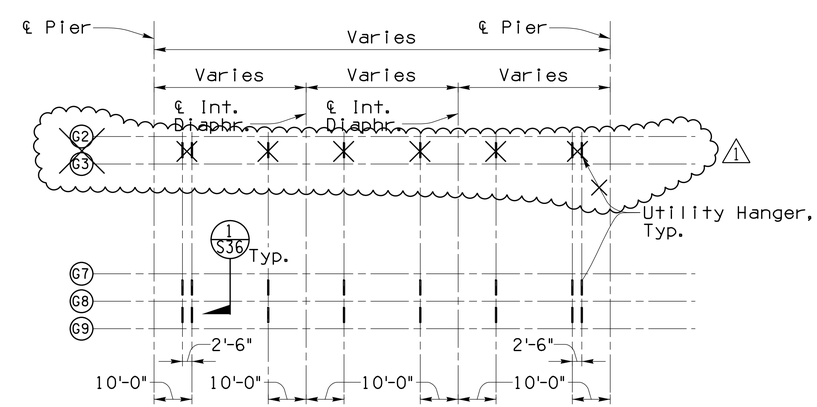

Notes:
1. Utility Hanger located typically per span between girder lines G9, G8, G7 ~~and G2, G3.~~
2. Coordinate Utility Hanger placement with deck reinforcing.

UNISTRUT LOCATIONS - PARTIAL PLAN VIEW

No Scale

1/S22

Priscilla S. Cornello, P.E., Director

Designed	JAM		11/15
Drawn	JRS, NUL		11/15
Checked	CGP		11/15
Proj. Engr.	JAM		11/15

No.	Revision Description	Engineer	Date
1	TEP Utility Line delete	J. Montoya	1/11/16

Structural Grace, Inc
1430 E. Fort Lowell Rd., Ste. 200, Tucson, AZ 85719 (520) 320-0156

Call at least two full working days before you begin excavation. ARIZONA 811 Blue Stake, Inc. Dial 811 or 1-800-782-5348 in Maricopa County (602) 263-1100

Pima County Department of Transportation

ABUTMENT DIAPHRAGM
SUNSET ROAD - SEGMENT 1
SILVERBELL RD. TO I-10

PROJECT NO. 4RTSUN

SUNSET ROAD - SILVERBELL ROAD TO I-10 - PROJECT NO. 4RTSUN

Scale:	As Noted	Sheet S25 of S43	Page 94 of 203

FILE NAME: W:\Jobs\2013\1326.01_Sunset_PDS\1326.01_Working\1326_Sunset_S25_AF1_Rev 1.dgn DATE: 1/12/2016 TIME: 12:08:33 PM JSmitley

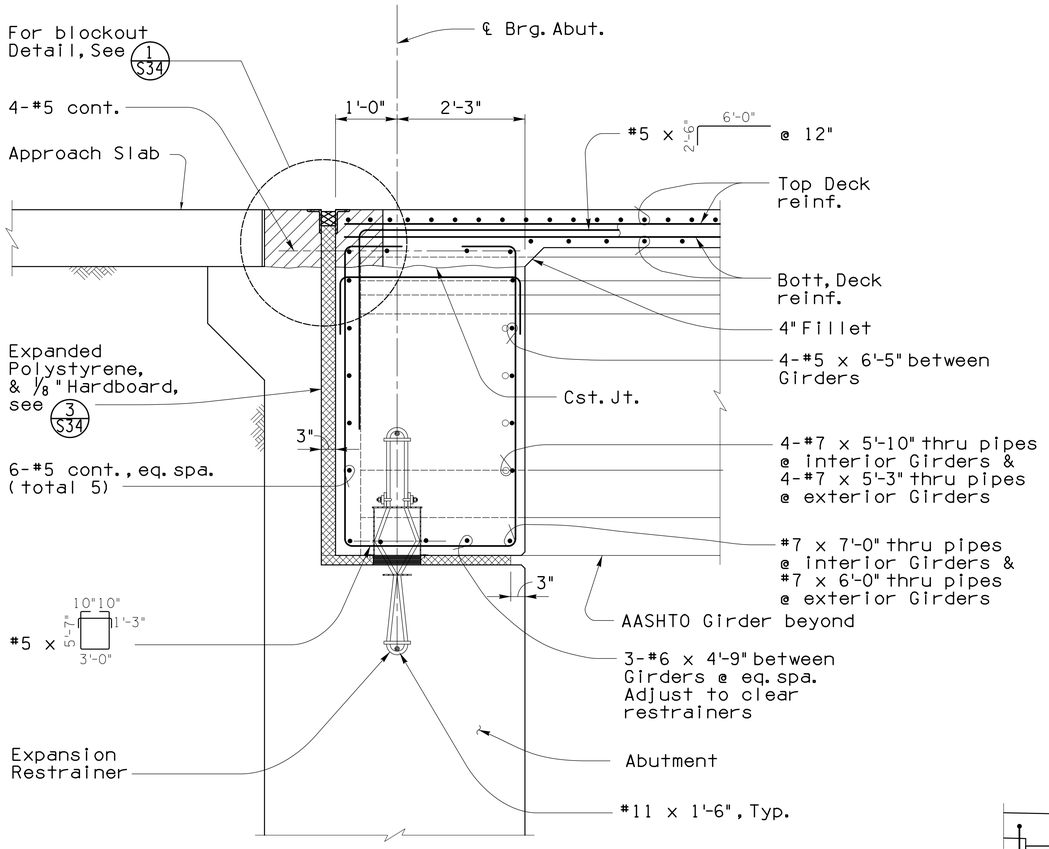

SECTION AT ABUT. DIAPHRAGM (A/S25)
3/4" = 1'-0"

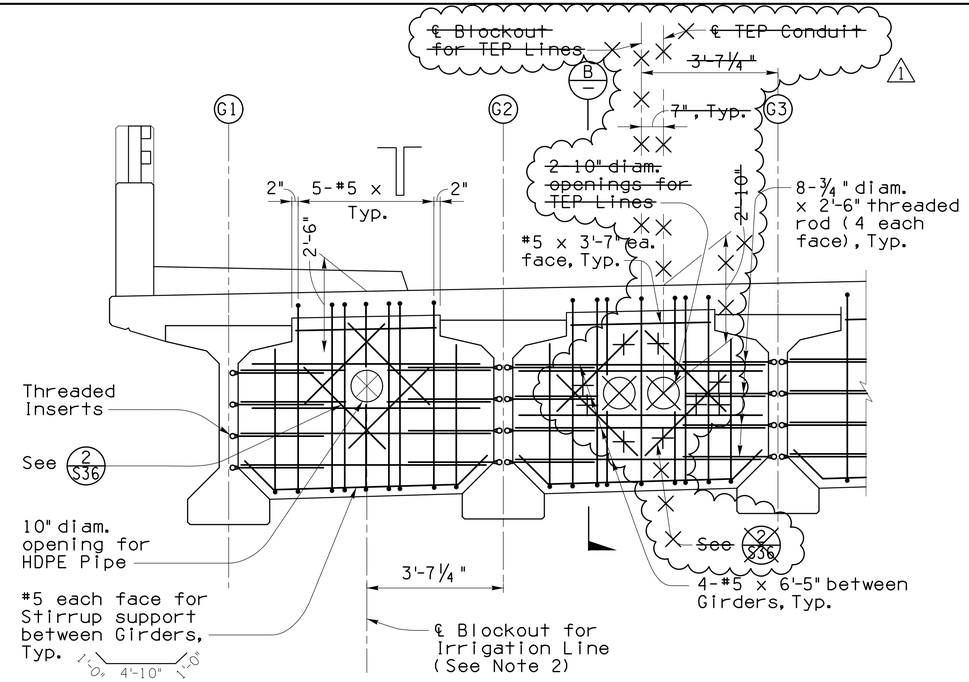

ELEVATION - INTERMEDIATE DIAPHRAGM
1/2" = 1'-0"

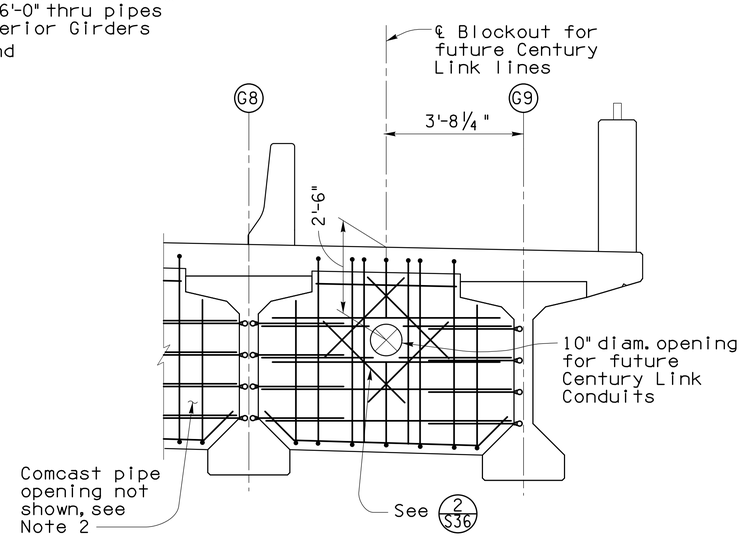

ELEVATION - INT. DIAPHRAGM
1/2" = 1'-0"

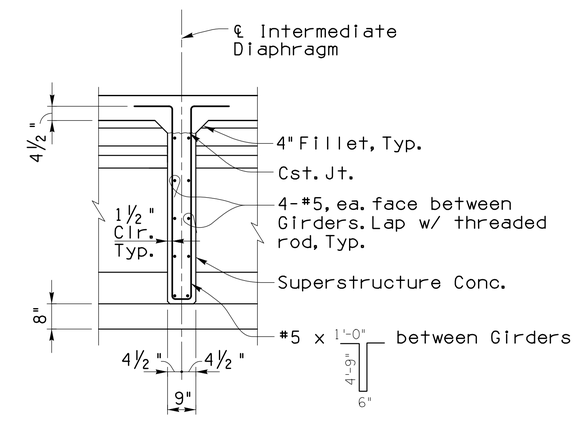

SECTION (B/—)
1/2" = 1'-0"

Notes:

1. Class S concrete may be used for the Abutment Diaphragms and Intermediate Diaphragms.
2. Provide a similar opening between Girders G7 & G8 for future Comcast utility. ℄ of opening shall be 3'-8 1/4" from ℄ Girder G8.

No.	Revision Description	Engineer	Date
1	TEP Utility Line deleted	J. Montoya	1/11/16

		Date
Designed	JAM	11/15
Drawn	JRS, NUL	11/15
Checked	CGP	11/15
Proj. Engr.	JAM	11/15

Priscilla S. Cornello, P.E., Director

Pima County Department of Transportation

Structural Grace, Inc
1430 E. Fort Lowell Rd., Ste. 200, Tucson, AZ 85719 (520) 320-0156

Call at least two full working days before you begin excavation. ARIZONA 811 Arizona Blue Stake, Inc. (602) 263-1100 • 1-800-782-5348 (in Southern Arizona Dial 811)

ABUT. & INT. DIAPHRAGM SECTIONS
SUNSET ROAD - SEGMENT 1
SILVERBELL RD. TO I-10
PROJECT NO. 4RTSUN

SUNSET ROAD - SILVERBELL ROAD TO I-10 - PROJECT NO. 4RTSUN

Scale:	As Noted	Sheet S26 of S43	Page 95 of 203

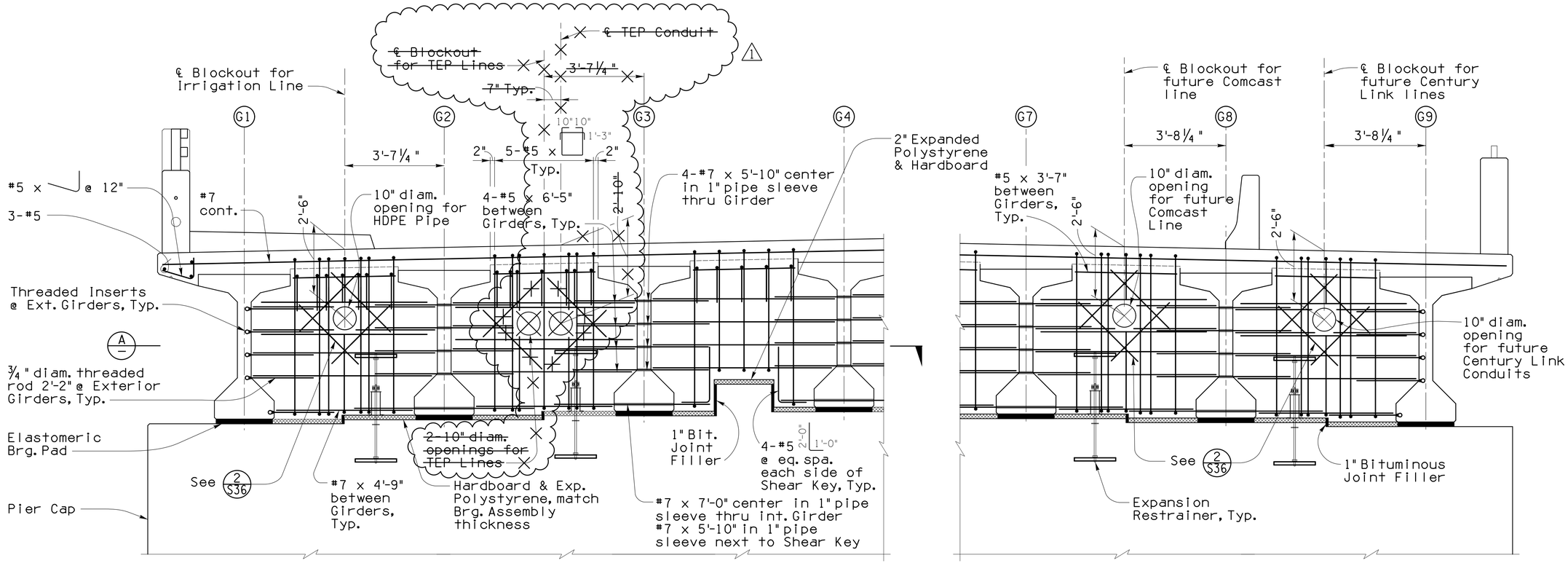

ELEVATION - PIERS 1 & 5 DIAPHRAGM
½" = 1'-0"

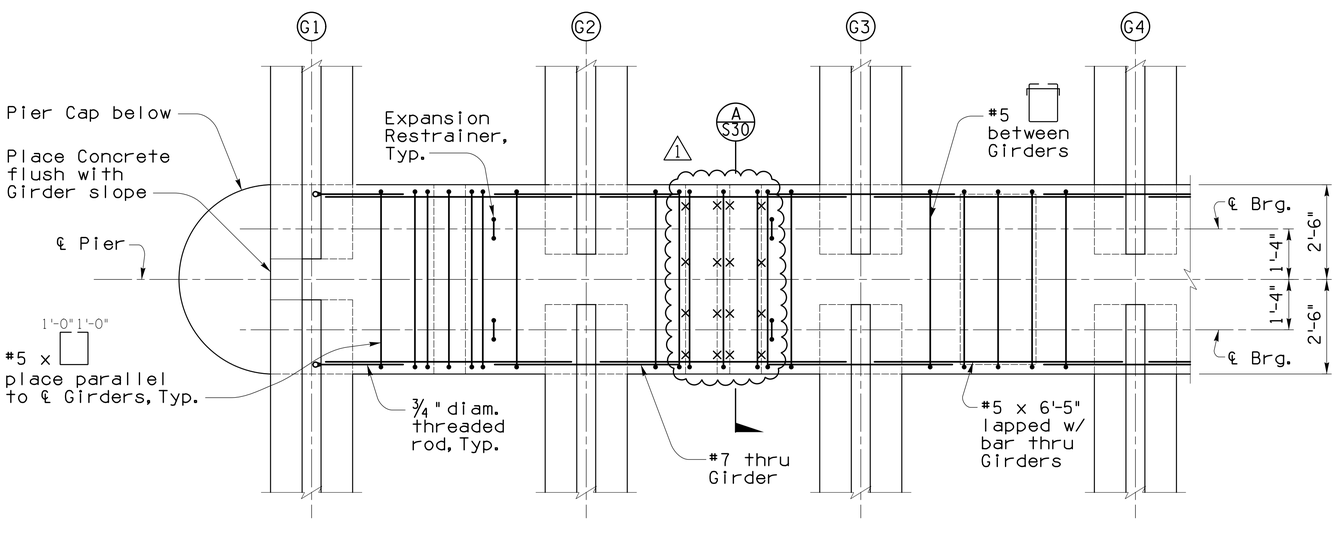

SECTION - PIERS 1 & 5 DIAPHRAGM (A)
½" = 1'-0"

Notes:

1. Class S concrete may be used for Pier 1 & 5 Diaphragms.
2. Min lap length of bar splices shall be: #7 bars 2'-5"

Priscilla S. Cornello, P.E., Director

Designed	JAM	11/15
Drawn	JRS, NUL	11/15
Checked	CGP	11/15
Proj. Engr.	JAM	11/15

No.	Revision Description	Engineer	Date
1	TEP Utility Line deleted	J. Montoya	1/11/16

Structural Grace, Inc
14310 E. Fort Lowell Rd., Ste. 200, Tucson, AZ 85719 (520) 320-0156

Call at least two full working days before you begin excavation. ARIZONA 811 Arizona Blue Stake, Inc. Dial 811 or 1-800-782-5348 (in Maricopa County (602) 263-1100)

Pima County Department of Transportation

PIERS 1 & 5 DIAPHRAGM
SUNSET ROAD - SEGMENT 1
SILVERBELL RD. TO I-10

PROJECT NO. 4RTSUN

SUNSET ROAD - SILVERBELL ROAD TO I-10 - PROJECT NO. 4RTSUN

Scale:	As Noted	Sheet S27 of S43	Page 96 of 203

FILE NAME: W:\Jobs\2013\1326.01_Sunset_PDS\1326.01_Working\1326_Sunset_S27_PF5_Rev 1.dgn DATE: 1/12/2016 TIME: 9:52:37 AM JSmitley

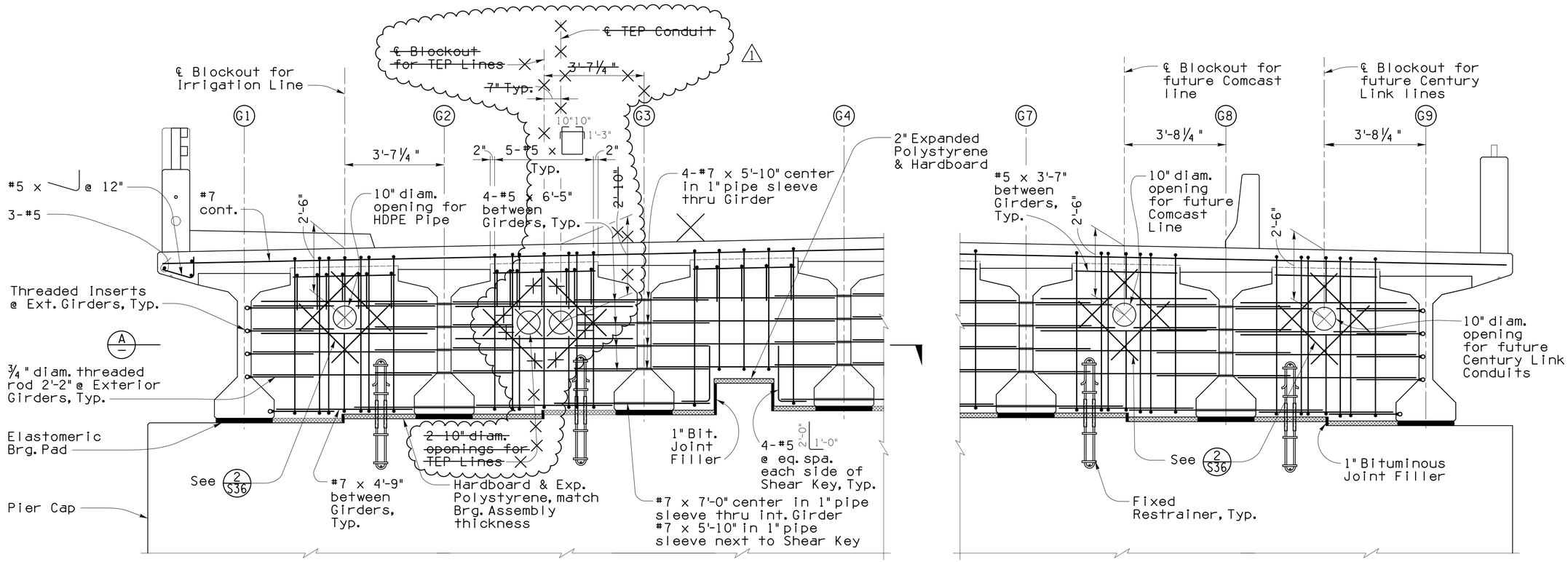

ELEVATION - PIERS 2 & 4 DIAPHRAGM
½" = 1'-0"

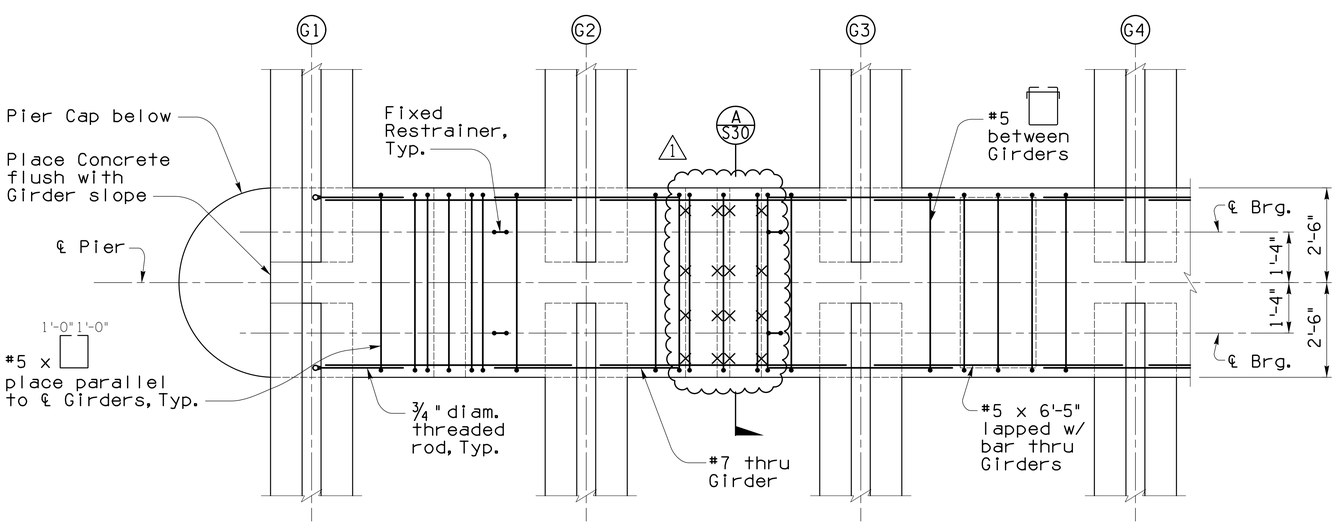

SECTION - PIERS 2 & 4 DIAPHRAGM
½" = 1'-0"

Notes:

1. Min lap length of bar splices shall be: #7 bars 2'-5"

No.	Revision Description	Date
1	TEP Utility Line deleted	1/11/16

Designed JAM 11/15
Drawn JRS, NUL 11/15
Checked CGP 11/15
Proj. Engr. JAM 11/15

Engineer J. Montoya Date 1/11/16

Priscilla S. Cornello, P.E., Director

Pima County Department of Transportation

Structural Grace, Inc
14310 E. Fort Lowell Rd., Ste. 200, Tucson, AZ 85719 (520) 320-0156

Call at least two full working days before you begin excavation. ARIZONA 811 Arizona Blue Stake, Inc. Dial 8-1-1 or 1-800-782-5348 (in Southern Arizona (520) 623-1389)

PIERS 2 & 4 DIAPHRAGM
SUNSET ROAD - SEGMENT 1
SILVERBELL RD. TO I-10

PROJECT NO. 4RTSUN

SUNSET ROAD - SILVERBELL ROAD TO I-10 - PROJECT NO. 4RTSUN

Scale:	As Noted	Sheet S28 of S43	Page 97 of 203

FILE NAME: W:\Jobs\2013\1326.01_Sunset_PDS\1326.01_Working\1326_Sunset_S28_PF2_Rev 1.dgn DATE: 1/12/2016 TIME: 9:53:31 AM JSmitley

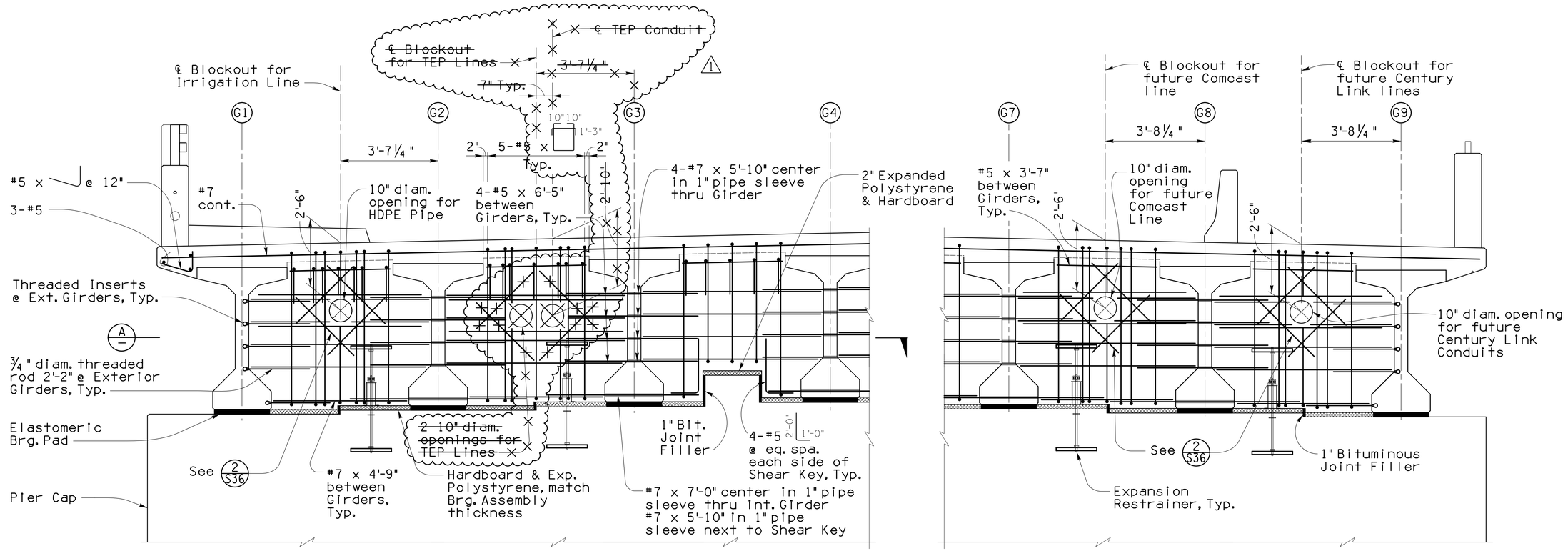

ELEVATION - PIER 3 DIAPHRAGM
½" = 1'-0"

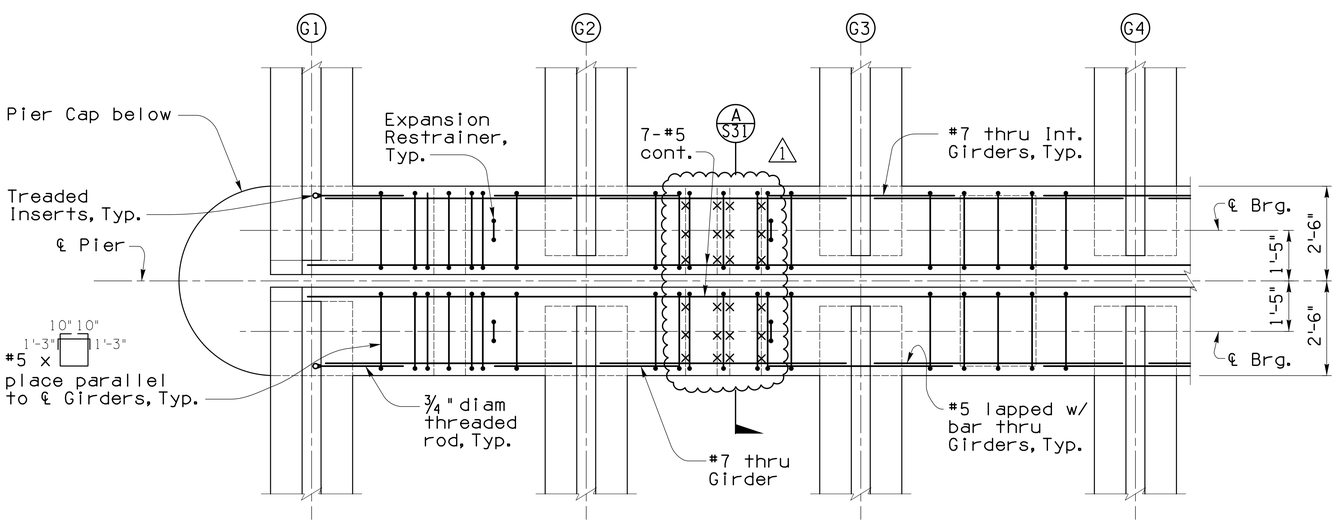

SECTION - PIER 3 DIAPHRAGM
½" = 1'-0"
A

Notes:

1. Min lap length of bar splices shall be: #7 bars 2'-5"

Scale:	As Noted	Sheet S29 of S43	Page 98 of 203

FILE NAME: W:\Jobs\2013\1326.01_Sunset_PDS\1326.01_Working\1326_Sunset_S29_PF3_Rev 1.dgn DATE: 1/12/2016 TIME: 9:54:20 AM JSmitley

Priscilla S. Cornello, P.E., Director

		Date
Designed	JAM	11/15
Drawn	JRS, NUL	11/15
Checked	CGP	11/15
Proj. Engr.	JAM	11/15

No.	Revision Description	Engineer	Date
1	TEP Utility Line deleted	J. Montoya	1/11/16

Structural Grace, Inc
1430 E. Fort Lowell Rd., Ste. 200, Tucson, AZ 85719 (520) 320-0156

Call at least two full working days before you begin excavation. ARIZONA811 Blue Stake, Inc. (Arizona Blue Stake, Inc. 1-800-782-5348) Dial 8-1-1 or 1-800-571-7511 Maricopa County (602) 263-1069

Pima County Department of Transportation

PIER 3 DIAPHRAGM
SUNSET ROAD - SEGMENT 1
SILVERBELL RD. TO I-10
PROJECT NO. 4RTSUN

SUNSET ROAD - SILVERBELL ROAD TO I-10 - PROJECT NO. 4RTSUN

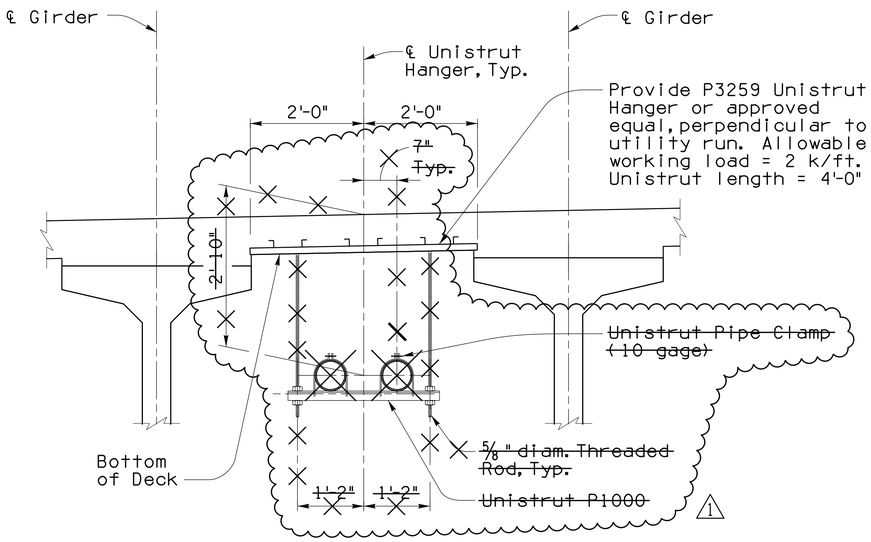

UTILITY HANGER DETAIL (1/S23) (1/S25)
3/4" = 1'-0"

Hanger & Hanger Insert Notes:

1. Contractor shall provide & install Unistrut Hanger Inserts.
2. Contractor shall coordinate with utility companies for exact location of all hanger inserts before placement of bridge deck.
3. Where utility is to be placed in the Future, provide plug or sealer for protection
4. For Century Link, Comcast ~~and TEP utilities,~~ 1 provide Unistrut P3259 hanger inserts not more than 10' away from face of abutment & pier diaphragm & 20-feet maximum spacing in between. ~~Additional Unistrut hangers shall be placed 2'-6" away from inserts closest to pier diaphragms for anchor hanger bracing rods. Bid Item No. 9230040.~~ 2 Additional Unistrut P3259 hanger inserts shall be placed 2'-6" away from inserts closest to pier diaphragms.

~~5. Utility Hanger for TEP consists of Unistrut P1000, pipe clamps, threaded rods and ancillary hardware. Hanger to be placed between girders G2 & G3. Bid Item No. 9230080.~~ 1

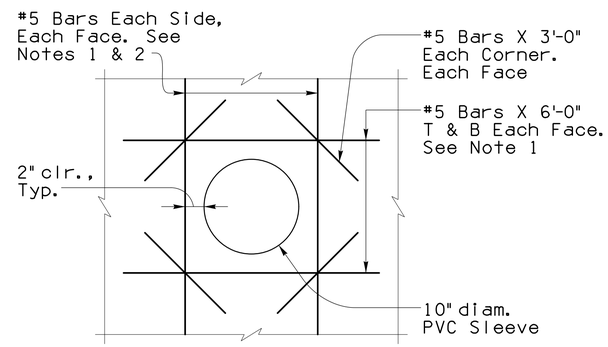

ELEVATION FOR SINGLE BLOCK-OUT

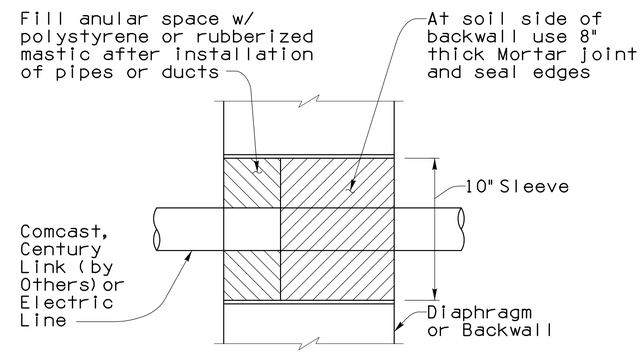

SECTION AT UTILITY LINE(S)

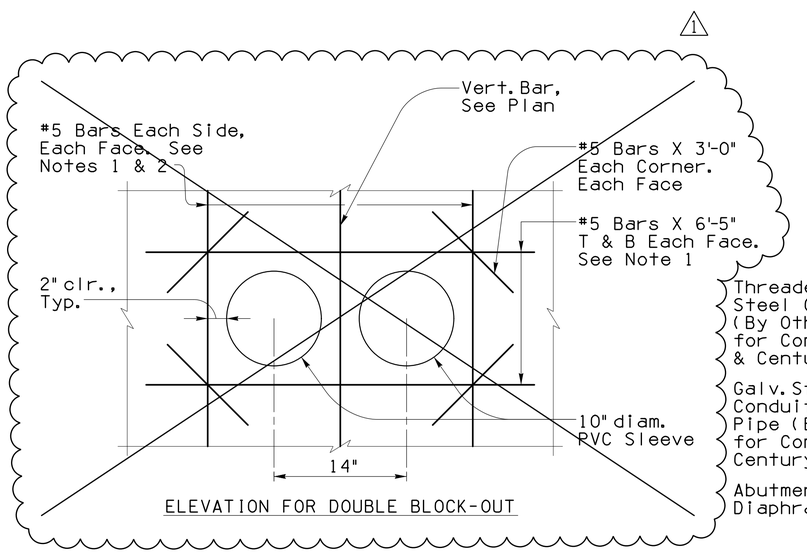

ELEVATION FOR DOUBLE BLOCK-OUT

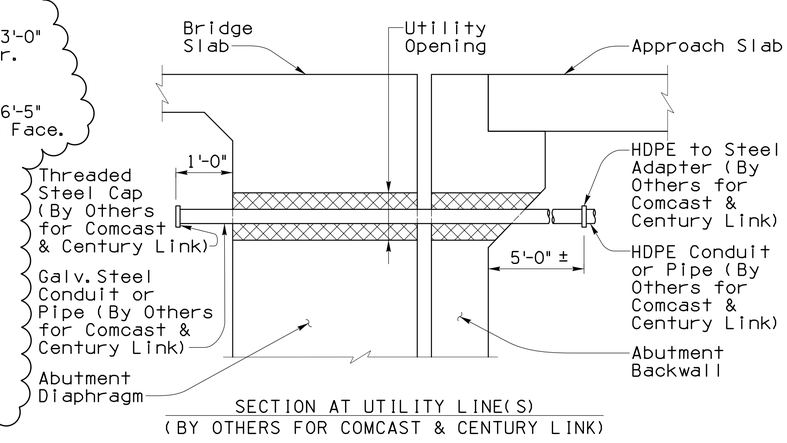

SECTION AT UTILITY LINE(S)
(BY OTHERS FOR COMCAST & CENTURY LINK)

Notes:

1. Area of add'l bars at ea. edge of block-out in ea. direcction shall match ½ the cross-sectional area of the interrupted bars. Min. of 1 bar req'd at ea. edge, ea. face.
2. Add'l vert. bars shall match shape and dimensions of cut verticals (such as ⊥).
3. PVC pipe sleeve openings shall be used at all end diaphragms and at the abutment backwalls.
4. The polystyrene or rubberized mastic shall be approved by the Engineer prior to placement.
5. Provide for conduit expansion couplings at each abutment and at piers 1, 3 & 5.
6. Provide for additional expansion couplings along the bridge length as recommended by the pipe manufacturer and utilities.
7. Polystyrene on rubberized mastic and mortar joint shall be incidental to the installation of the rigid conduit.

BLOCK-OUT DETAIL AT ABUTMENT BACKWALLS AND ALL DIAPHRAGMS
(BID ITEM NO. 9230040)
No Scale
(2/S25) (2/S26) (2/S27) (2/S28) (2/S29)

Priscilla S. Cornelio, P.E., Director

Designed	JAM	11/15
Drawn	JRS, MJL	11/15
Checked	CGP	11/15
Proj. Engr.	JAM	11/15

No.	Revision Description	Engineer	Date
1	TEP Utility Line deleted	J. Montoya	1/11/16
2	Hanger Insert Rev.	J. Glock	1/13/16

Structural Grace, Inc
14310 E. Fort Lowell Rd., Ste. 200, Tucson, AZ 85719 (520) 320-0156

Call at least two full working days before you begin excavation.
ARIZONA 811
Arizona Blue Stake, Inc.
Dial 8-1-1 or 1-800-782-5348
In Maricopa County (602) 263-1100

Pima County Department of Transportation

MISCELLANEOUS DETAILS - 5 OF 5
SUNSET ROAD - SEGMENT 1
SILVERBELL RD. TO I-10

PROJECT NO. 4RTSUN

SUNSET ROAD - SILVERBELL ROAD TO I-10 - PROJECT NO. 4RTSUN

Scale:	As Noted	Sheet S36 of S43	Page 105 of 203

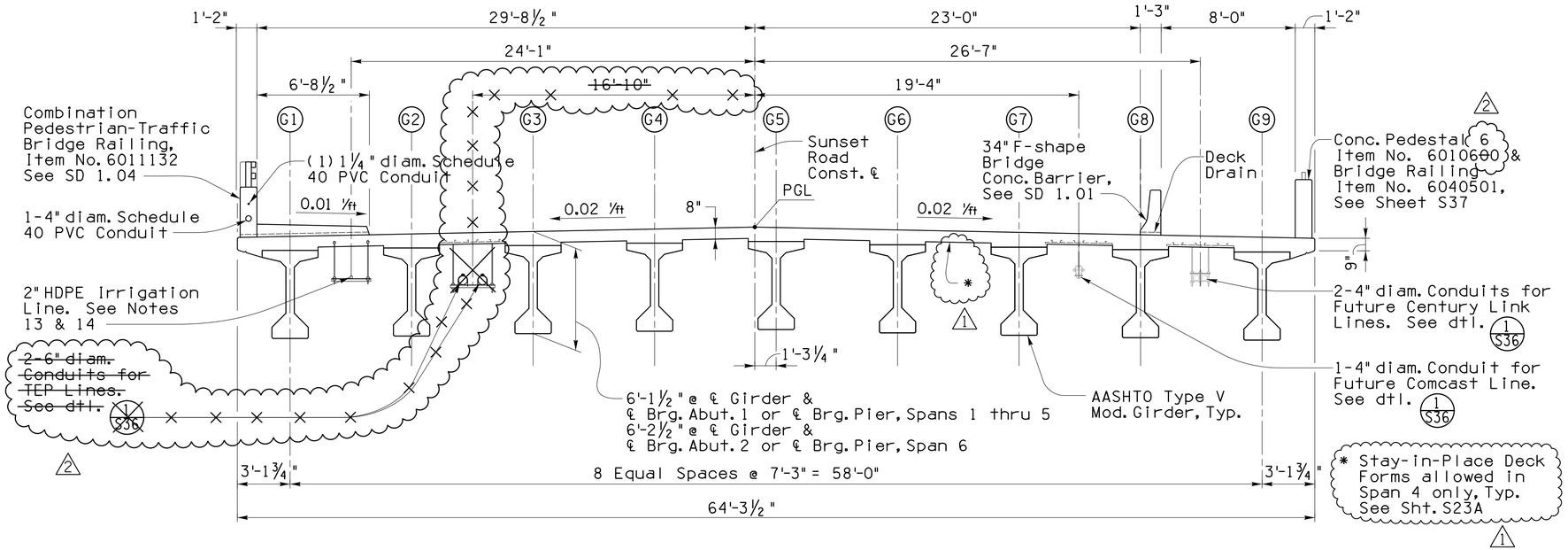

TYPICAL SECTION
¼" = 1'-0"

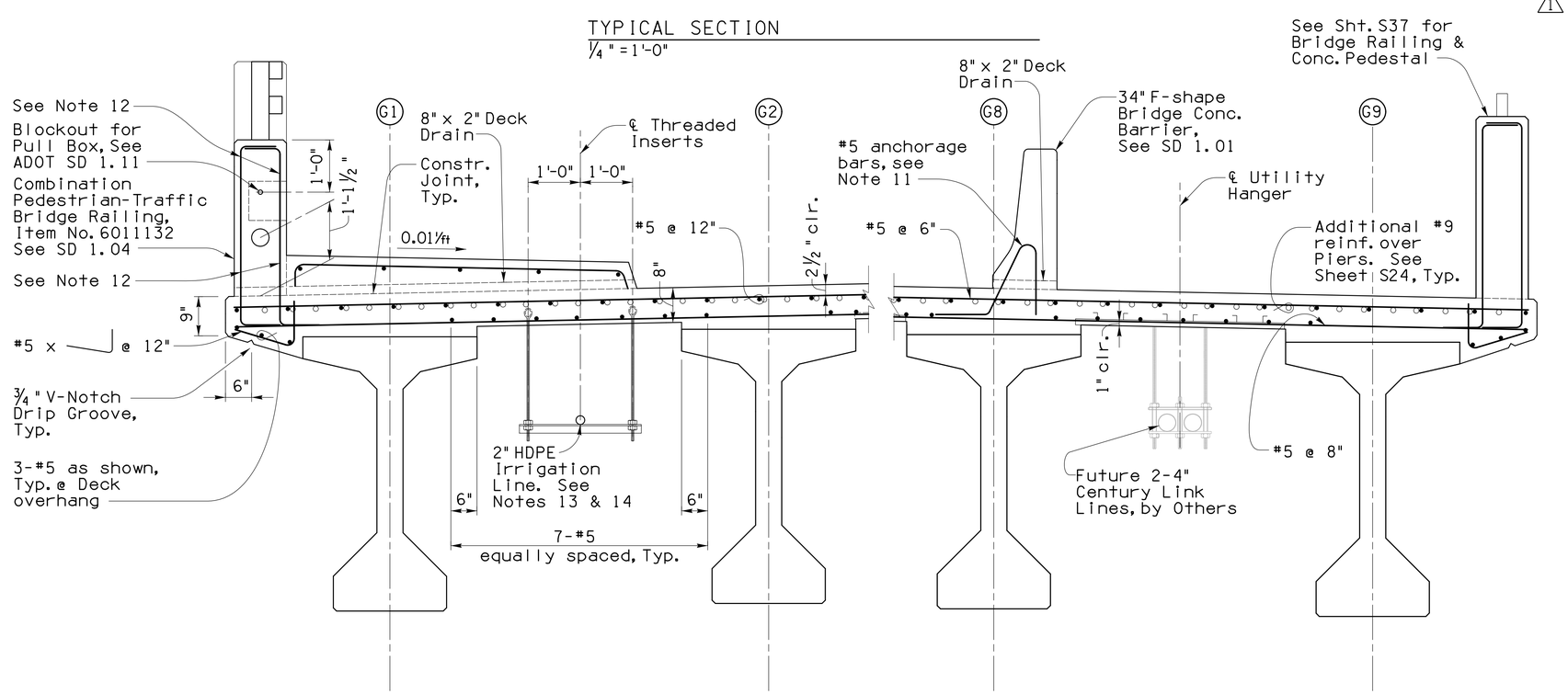

TYPICAL PARTIAL SECTION
¾" = 1'-0"

NOTES:

1. Longitudinal Deck reinforcement shall be placed parallel to ℄ Girder.
2. Transverse Deck reinforcement shall be placed perpendicular to Cst. ℄ with spacing measured along Cst. ℄.
3. Bars shall not be spliced within the required lap length of adjacent bars.
4. Top transverse bars in the Deck Slab shall be spliced where required at mid-span between centerline of Girders.
5. Bottom transverse bars in Deck Slab shall be spliced where required at centerline of Girder.
6. Minimum lap length of bar splices shall be
   #5 bars: 2'-2"
7. Contractor to submit Shop Drawings showing lap splice locations to the Engineer for approval prior to fabrication.
8. Intermediate Diaphragms and expansion Pier Diaphragms shall be poured prior to the Deck pour.
9. Pinned Abutment & Pier Diaphragms shall be poured concurrent with the Deck pour.
10. Contractor shall submit a Deck Pour Schedule to the Engineer for approval prior to placing concrete.
11. For size and spacing of anchorage bars for the 34" F-shape Concrete Bridge Barriers, see SD 1.01. Anchorage bars are included in the linear cost of the concrete Barriers.
12. For size and spacing of reinforcing bars, see SD 1.04.
13. Provide ½" threaded inserts at 42" maximum spacing and at a minimum distance for 24" from face of Abutments, Pier Caps or Interior Diaphragms.
14. For 2" HDPE irrigation line hanger detail, See Irrigation Plans.
15. All cost associated with the construction of the Combination Pedestrian Traffic Bridge Railing, including conduits, pull boxes, sidewalk, railing, dado, anchorage bars and deck drains are included in pay item No. 6011132.
16. ITS and irrigation elec. conduits are incidental to cost of Combination Pedestrian/Traffic Bridge Railing.

Priscilla S. Cornelio, P.E., Director

Designed	JMM	11/15
Drawn	HKS, MJL	11/15
Checked	CGP	11/15
Proj. Engr.	JMM	11/15

No.	Revision Description	Engineer	Date
1	S.I.P., Deck Span 4	C. Perchinelli	1/6/16
2	TEP Line deleted, Item No.	J. Montoya	1/11/16

Structural Grace, Inc
1930 E. Fort Lowell Rd., Ste. 200, Tucson, AZ 85719 (520) 320-0156

Call at least two full working days before you begin excavation. Arizona Blue Stake, Inc. ARIZONA 811 Dial 8-1-1 or 1-800-STAKE-IT (782-5348) Maricopa County (602) 263-1100

Pima County Department of Transportation

TYP. DECK SECTIONS
SUNSET ROAD - SEGMENT 1
SILVERBELL RD. TO I-10

PROJECT NO. 4RTSUN

SUNSET ROAD - SILVERBELL ROAD TO I-10 - PROJECT NO. 4RTSUN

Scale:	As Noted	Sheet S23 of S43	Page 92 of 203

FILE NAME: W:\Jobs\2013\1326.01_Sunset_PDS\1326.01_Working\1326_Sunset_S23_DD1_Rev 2.dgn DATE: 1/12/2016 TIME: 9:44:28 AM JSmitley

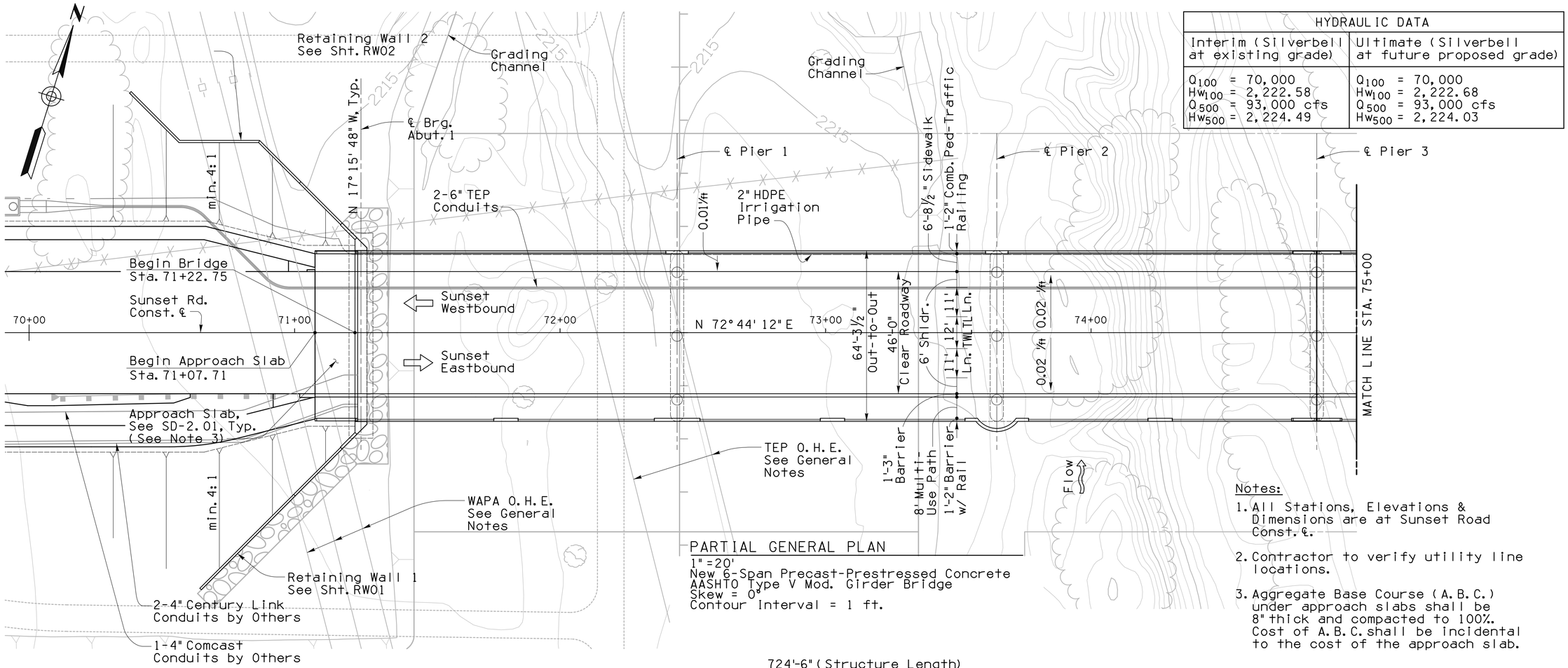

PARTIAL GENERAL PLAN

1" = 20'

New 6-Span Precast-Prestressed Concrete AASHTO Type V Mod. Girder Bridge
Skew = 0°
Contour Interval = 1 ft.

HYDRAULIC DATA	
Interim (Silverbell at existing grade)	Ultimate (Silverbell at future proposed grade)
Q_{100} = 70,000 Hw_{100} = 2,222.58 Q_{500} = 93,000 cfs Hw_{500} = 2,224.49	Q_{100} = 70,000 Hw_{100} = 2,222.68 Q_{500} = 93,000 cfs Hw_{500} = 2,224.03

Notes:

1. All Stations, Elevations & Dimensions are at Sunset Road Const. ℄.
2. Contractor to verify utility line locations.
3. Aggregate Base Course (A.B.C.) under approach slabs shall be 8" thick and compacted to 100%. Cost of A.B.C. shall be incidental to the cost of the approach slab.

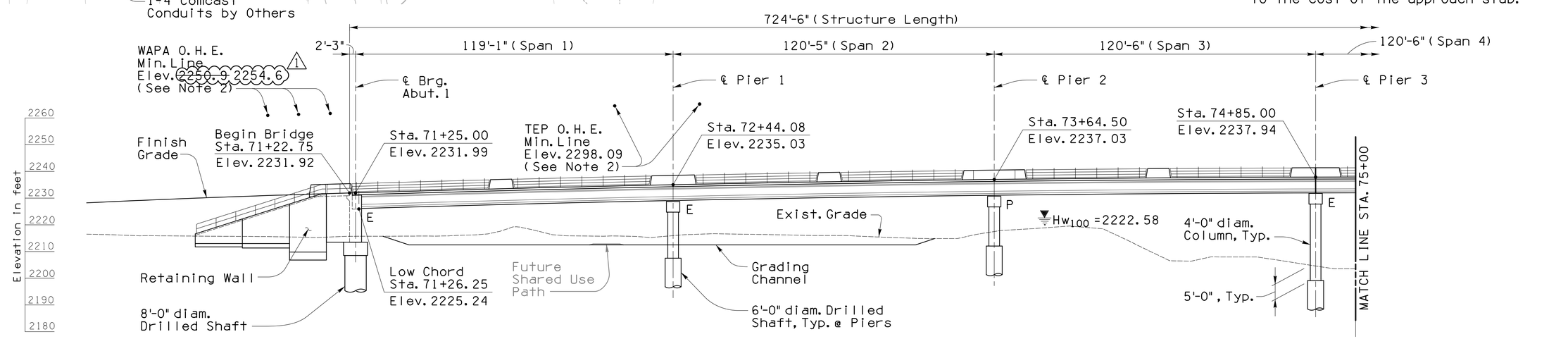

PARTIAL ELEVATION

1" = 20'

Priscilla S. Cornelio, P.E., Director

Designed	JAM	11/15
Drawn	MSS, MJL	11/15
Checked	CGP	11/15
Proj. Engr.	JAM	11/15

No.	Revision Description	Engineer	Date
1	Revise WAPA Elev.	JWG	1/13/16

Structural Grace, Inc
1430 E. Fort Lowell Rd., Ste. 200, Tucson, AZ 85719 (520) 320-0156

Call at least two full working days before you begin excavation. ARIZONA 811 Blue Stake, Inc. Dial 811 or 1-800-782-5348 in Maricopa County (602) 263-1069

Pima County Department of Transportation

GENERAL PLAN & ELEVATION - 1 OF 2
SUNSET ROAD - SEGMENT 1
SILVERBELL RD. TO I-10

PROJECT NO. 4RTSUN

SUNSET ROAD - SILVERBELL ROAD TO I-10 - PROJECT NO. 4RTSUN

Scale:	As Noted	Sheet S02 of S43	Page 71 of 203

FILE NAME: W:\Jobs\2013\1326.01_Sunset_PDS\1326.01_Working\1326_Sunset_S02_GP1_Rev 1.dgn DATE: 1/13/2016 TIME: 12:17:10 PM MLichtenstein

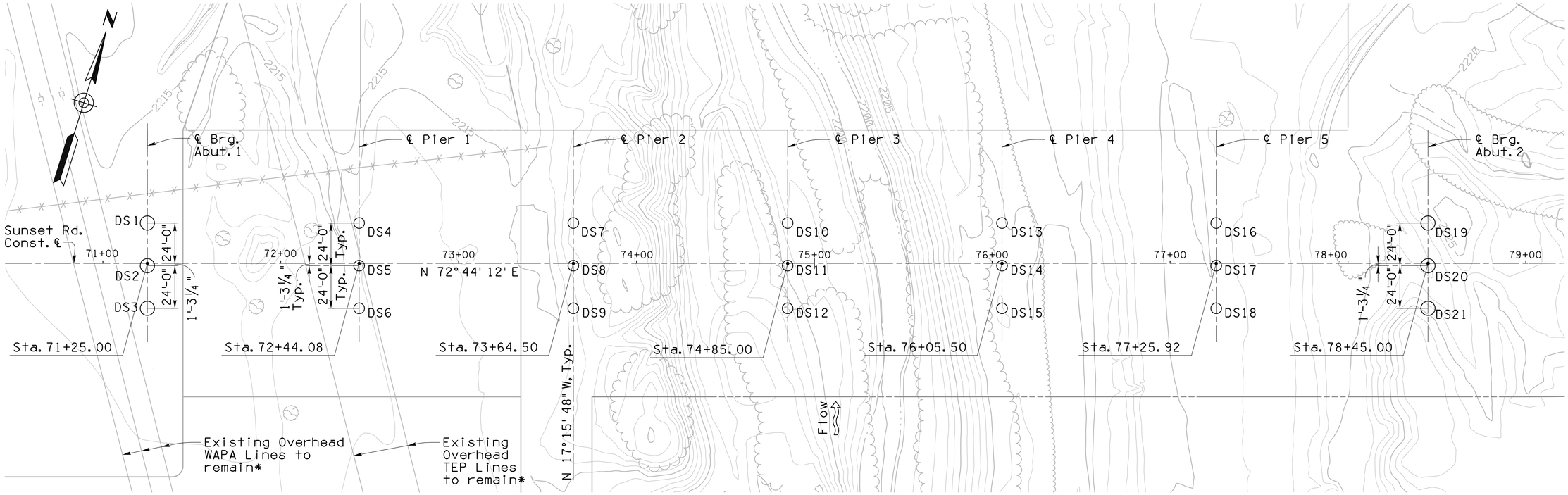

FOUNDATION PLAN
1" = 30'

*See Special Provisions when working in vicinity of overhead lines

THE LOCATION OF ALL UTILITIES IS APPROXIMATE ONLY. LOCATIONS SHOWN REFLECT THE FINDINGS OF THE LATEST AVAILABLE MAPPING.

DRILLED SHAFT SCHEDULE						
Mark	Drilled Shaft Diameter (in.)	Drilled Shaft Length (ft.)	Top Elev. (ft.)	Tip Elev. (ft.)	Factored Vertical Force (kips)	
					Load	Resistance
DS1	8'-0"	1 116.75	2208.75	2092.00	3100	3250
DS2	8'-0"	116.75	2208.75	2092.00	3110	3250
DS3	8'-0"	116.75	2208.75	2092.00	3070	3250
DS4	6'-0"	140.50	2207.50	2067.00	2140	2950
DS5	6'-0"	140.50	2207.50	2067.00	2350	2950
DS6	6'-0"	140.50	2207.50	2067.00	1860	2950
DS7	6'-0"	140.50	2207.50	2067.00	2140	2950
DS8	6'-0"	140.50	2207.50	2067.00	2350	2950
DS9	6'-0"	140.50	2207.50	2067.00	1860	2950
DS10	6'-0"	132.75	2199.75	2067.00	2140	2950
DS11	6'-0"	132.75	2199.75	2067.00	2350	2950
DS12	6'-0"	132.75	2199.75	2067.00	1860	2950

DRILLED SHAFT SCHEDULE						
Mark	Drilled Shaft Diameter (in.)	Drilled Shaft Length (ft.)	Top Elev. (ft.)	Tip Elev. (ft.)	Factored Vertical Force (kips)	
					Load	Resistance
DS13	6'-0"	138.25	2205.25	2067.00	2140	2950
DS14	6'-0"	138.25	2205.25	2067.00	2350	2950
DS15	6'-0"	138.25	2205.25	2067.00	1860	2950
DS16	6'-0"	143.25	2210.25	2067.00	2140	2950
DS17	6'-0"	143.25	2210.25	2067.00	2350	2950
DS18	6'-0"	143.25	2210.25	2067.00	1860	2950
DS19	8'-0"	137.75	2216.75	2079.00	3580	3800
DS20	8'-0"	137.75	2216.75	2079.00	3780	3800
DS21	8'-0"	137.75	2216.75	2079.00	3580	3800

TEMPORARY SHORING NOTES

The Contractor shall be responsible for providing temporary shoring as required, to protect utilities, for protection of workers, or as otherwise needed to accomplish the work. Shoring shall conform to the design and construction specifications noted in the General Notes.

Contractor to submit a plan outlining construction procedures, and shoring requirements and design to the Engineer for review and approval prior to proceeding with the work. See Standard Specifications and Special Provisions for additional information.

Pima County Department of Transportation

Priscilla S. Cornello, P.E., Director

Designed	JAM	11/15
Drawn	JRS, MJL	11/15
Checked	CGP	11/15
Proj. Engr.	JAM	11/15

No.	Revision Description	Engineer	Date
1	Corrected Shaft Length	JWC	1/6/16

Structural Grace, Inc
14301 E. Fort Lowell Rd., Ste. 200, Tucson, AZ 85719 (520) 320-0156

Call at least two full working days before you begin excavation. ARIZONA811 Arizona Blue Stake, Inc. Dial 8-1-1 or 1-800-782-5348 In Maricopa County (602) 263-1100

FOUNDATION PLAN
SUNSET ROAD - SEGMENT 1
SILVERBELL RD. TO I-10
PROJECT NO. 4RTSUN

SUNSET ROAD - SILVERBELL ROAD TO I-10 - PROJECT NO. 4RTSUN

Scale: As Noted | Sheet S06 of S43 | Page 75 of 203

FILE NAME: W:\Jobs\2013\1326.01_Sunset_PDS\1326.01_Working\1326_Sunset_S06_FL1_Rev 1.dgn DATE: 1/13/2016 TIME: 5:04:17 PM MLichtenstein

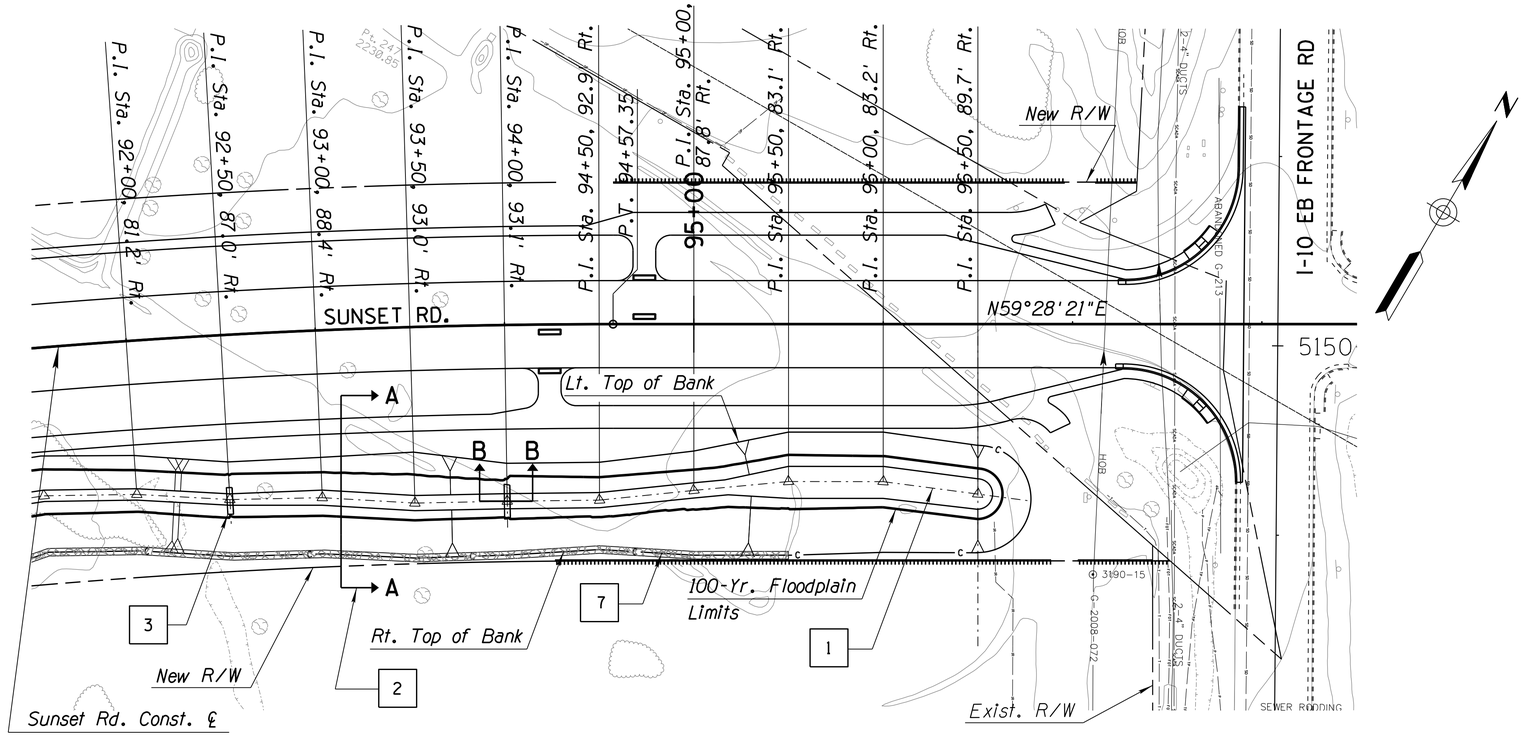

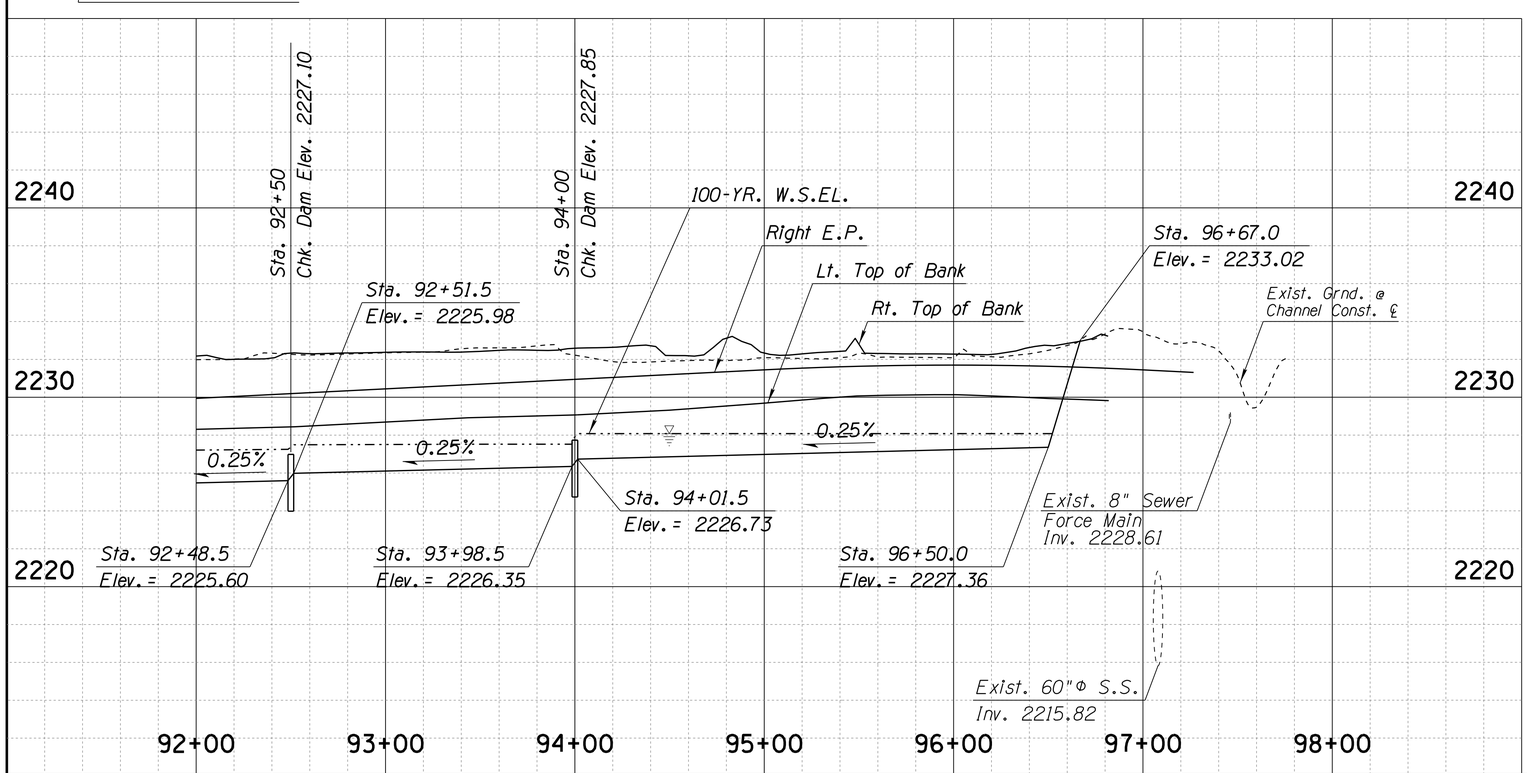

Notes:

1. Channel Const. ℄ Excavation Included w/ Roadway Excavation See Staking Plan, Detail RD10
2. Channel Typical Section See Section A-A, Detail RD10
3. Gabion Check Dam See Section B-B, Detail RD10
4. Not Used
5. Not Used
6. Not Used
7. Sta 92+00 to Sta 95+50 26 C.Y. Gravel Riprap (Dumped) With Filter Fabric. Bid Item No. 9130001 See Section A-A, Detail ~~Sheet~~ RD10. Gravel Riprap Shall Match Color Selected for Item 8030029, Rock Mulch, See Landscape Plans.

No.	Revision Description	Engineer	Date
1	Sheet & Detail Reference Change	G. Bambauer	1/13/16

		Date
Designed	GB	11/15
Drawn	CPC	11/15
Checked	JJK	11/15
Proj. Engr.	GB	11/15

Priscilla S. Cornelio, P.E., Director

Registered Professional Engineer (Civil) CERTIFICATE NO. 37844 GREGORY ALLEN BAMBAUER Date Signed 09/30/2016 ARIZONA U.S.A. Expires 09/30/2017

PARSONS BRINCKERHOFF
177 N. CHURCH AVE., STE. 610
TUCSON, AZ. 85701
(520) 882-6424

Arizona Blue Stake 1-800-STAKE-IT (1-800-782-5348) Ref. Drawing Date Stamp No. 76

Pima County Department of Transportation

ROADSIDE CHANNEL
Sta 92+00 to Sta 100+00
SUNSET ROAD - SEGMENT 1
SILVERBELL RD. TO I-10

PROJECT NO. 4RTSUN

SUNSET ROAD – SILVERBELL ROAD TO I-10 – PROJECT NO. 4RTSUN

40' 0 40' 80'
SCALE: 1" = 40'

Scale:	1"=40' Horiz.	Sheet CD06 of CD06	Page 50 of 203

FILE NAME: T:\11542C Sunset\Drainage\4RTSUN_drn_006.dgn

Tue 17 Nov 2015, 15:57:22

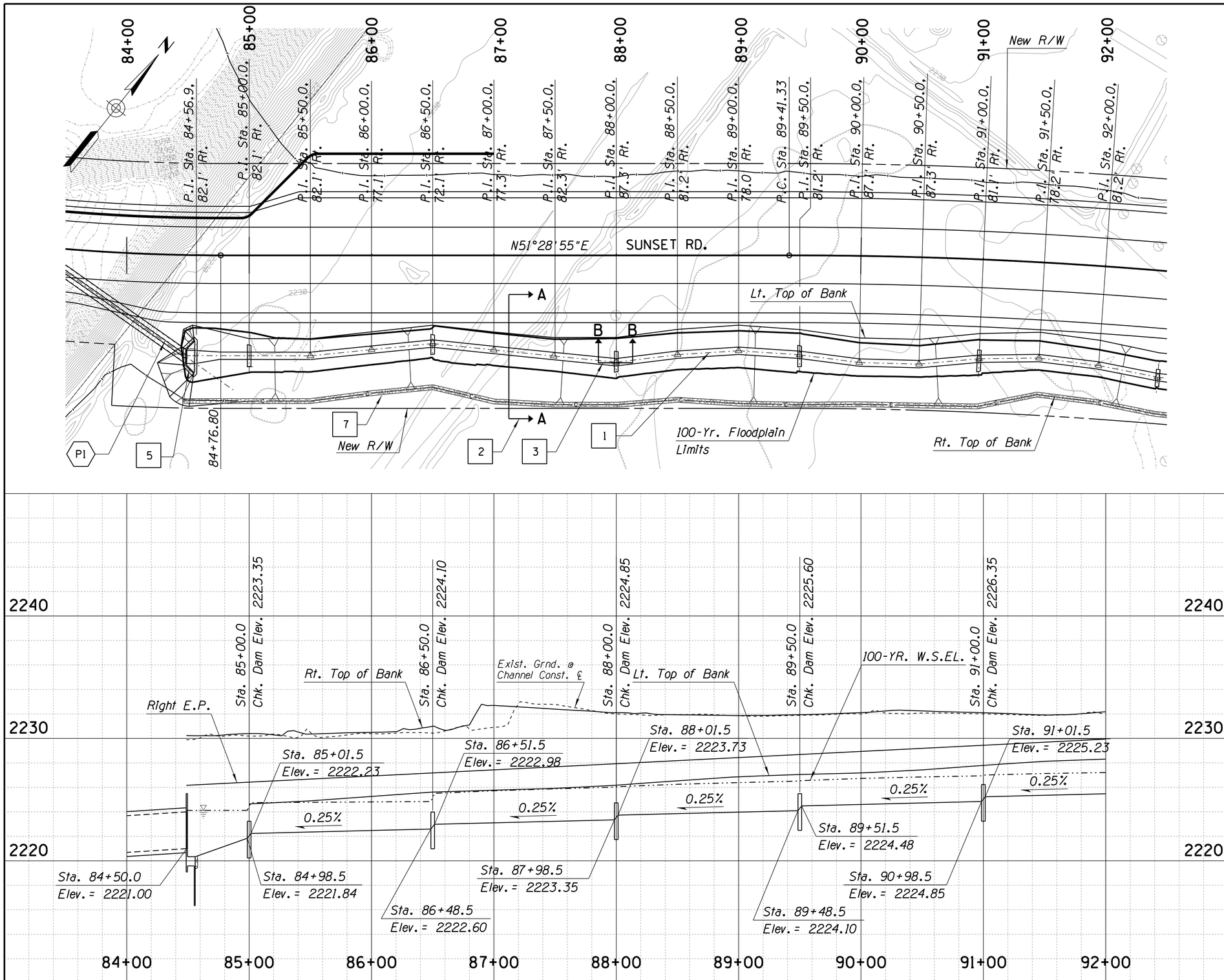

Notes:

1. Channel Const. ℄ Excavation Included w/ Roadway Excavation See Staking Plan, Detail RD10
2. Channel Typical Section See Section A-A, Detail RD10
3. Gabion Check Dam See Section B-B, Detail RD10
4. Not Used
5. New Headwall, See Sheet CD04
6. Not Used
7. Sta 84+50 to Sta 92+00 56 C.Y. Gravel Riprap (Dumped) With Filter Fabric. To Be Paid Under Bid Item No. 9130001 See Section A-A, Detail ~~Sheet~~ RD10. Gravel Riprap Shall Match Color Selected for Item 8030029, Rock Mulch, See Landscape Plans.

P1 New Culvert I.D.

40' 0 40' 80'
SCALE: 1"=40'

Priscilla S. Cornelio, P.E., Director

Designed	GB	11/15
Drawn	CPC	11/15
Checked	JJK	11/15
Proj. Engr.	GB	11/15

No.	Revision Description	Engineer	Date
1	Sheet & Detail Reference Change	G. Bambauer	11/13/16

Registered Professional Engineer (Civil) CERTIFICATE NO. 37844 GREGORY ALLEN BAMBAUER Date Signed 09/30/2017 ARIZONA U.S.A. Expires 09/30/2017

PARSONS BRINCKERHOFF
177 N. CHURCH AVE., STE. 610
TUCSON, AZ. 85701
(520) 882-6424

Arizona Blue Stake 1-800-STAKE-IT 1-800-782-5348 Call 2 working days before you dig

Pima County Department of Transportation

ROADSIDE CHANNEL
Sta 84+50 to Sta 92+00
SUNSET ROAD - SEGMENT 1
SILVERBELL RD. TO I-10

PROJECT NO. 4RTSUN

SUNSET ROAD – SILVERBELL ROAD TO I-10 – PROJECT NO. 4RTSUN

Scale: 1"=40' Horiz. | Sheet CD05 of CD06 | Page 49 of 203

FILE NAME: T:\11542C Sunset\Drainage\4RTSUN_drn_005.dgn

Thu 12 Nov 2015, 16:50:33