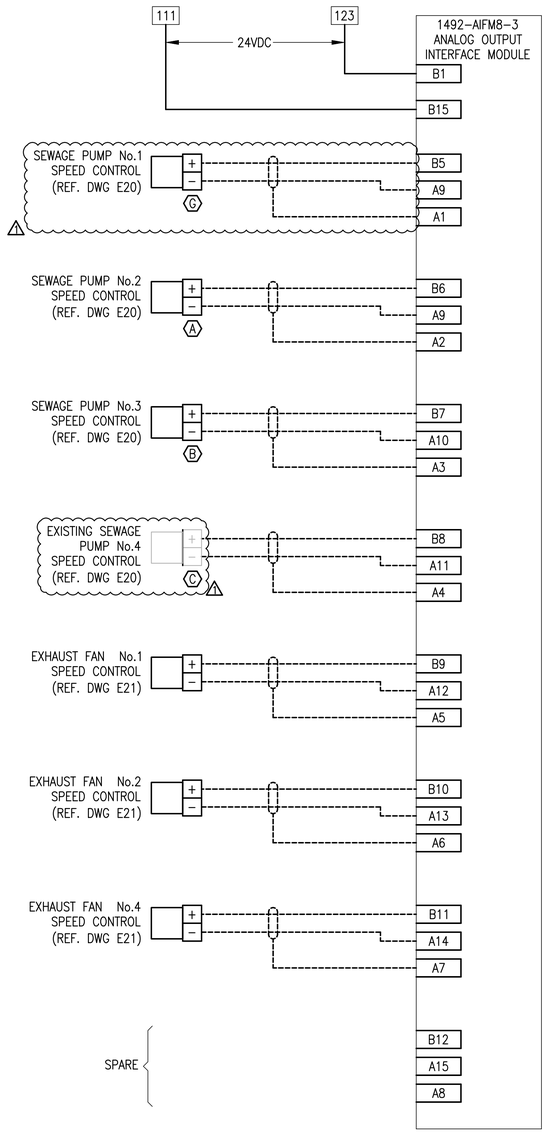

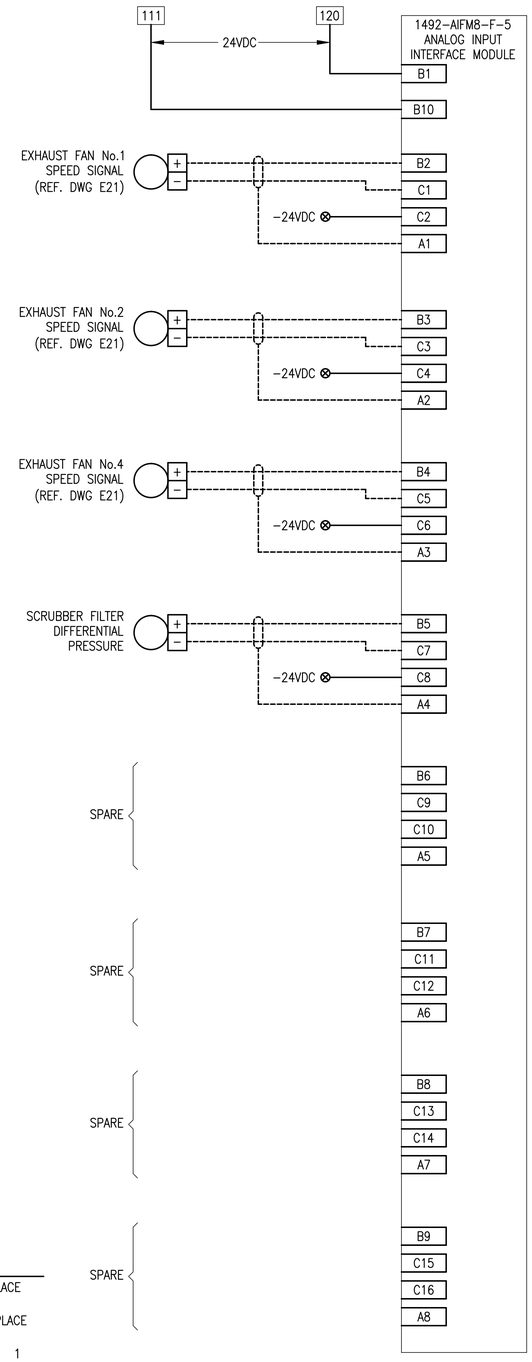

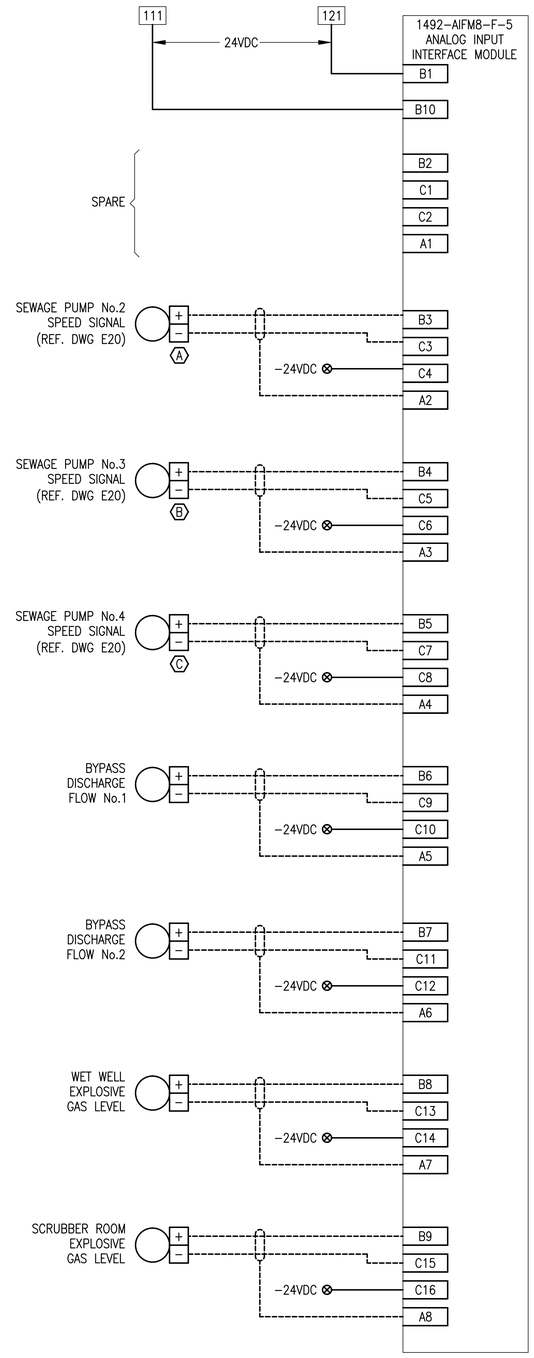

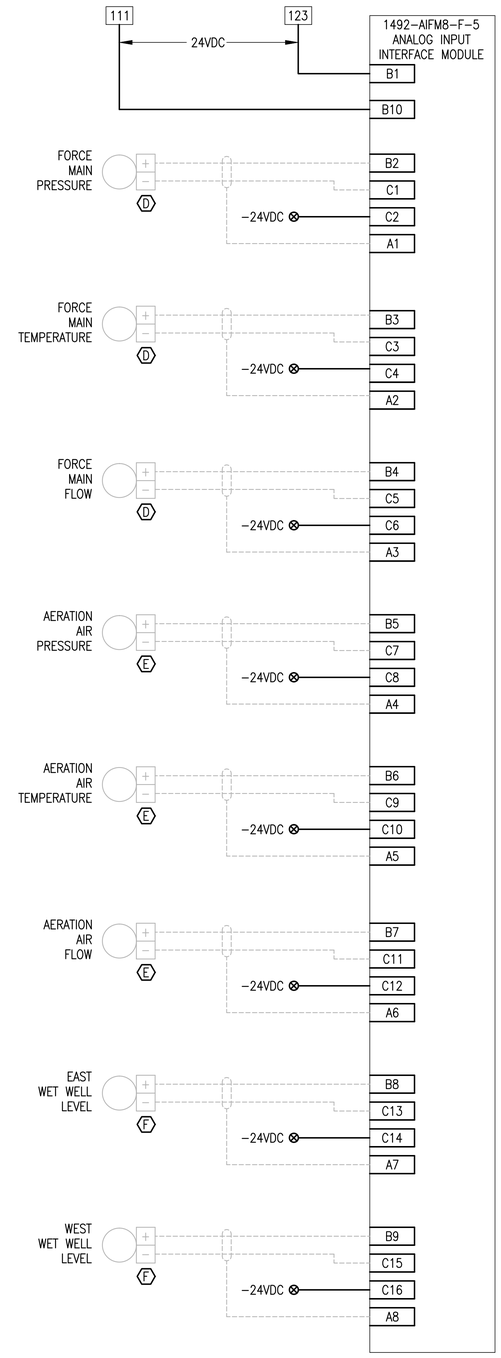

KEYNOTES

A. EXISTING 2 TSP, 3/4""C (CONDUIT I1) FROM PUMP No.2 VFD TO MAIN CONTROL PANEL. REPLACE THE EXISTING 2 TSP WITH 2 TSP, #14G. 1 TSP SHALL BE USED FOR THIS CIRCUIT.

B. EXISTING 2 TSP, 3/4""C (CONDUIT I1A) FROM PUMP No.3 VFD TO MAIN CONTROL PANEL. REPLACE THE EXISTING 2 TSP WITH 2 TSP, #14G. 1 TSP SHALL BE USED FOR THIS CIRCUIT.

C. RUN 2 TSP, #14G IN EXISTING SPARE 3/4"C FROM PUMP No.4 VFD TO MAIN CONTROL PANEL. 1 TSP SHALL BE USED FOR THIS CIRCUIT.

D. EXISTING 3 TSP, 3/4"C (CONDUIT I4) FROM FORCE MAIN PRESSURE, TEMPERATURE AND FLOW TRANSMITTERS TO MAIN CONTROL PANEL CONTAINS THIS CIRCUIT. RECONNECT THIS EXISTING CIRCUIT TO NEW PLC INPUT AS SHOWN. FIELD TRANSMITTERS SHOWN ARE EXISTING.

E. EXISTING 2 TSP, 3/4"C (CONDUIT I5) FROM AERATION AIR PRESSURE AND TEMPERATURE TRANSMITTERS TO MAIN CONTROL PANEL CONTAINS THIS CIRCUIT. RECONNECT THIS EXISTING CIRCUIT TO NEW PLC INPUT AS SHOWN. FIELD TRANSMITTERS SHOWN ARE EXISTING.

F. (*VERIFY EXISTING WIRING*)

G. RUN 2 TSP, #14G IN EXISTING SPARE 3/4"C FROM PUMP No.1 VFD TO MAIN CONTROL PANEL. 1 TSP SHALL BE USED FOR THIS CIRCUIT. 1

GENERAL NOTE

NEW ITEMS ARE SHOWN DARK AND EXISTING ITEMS ARE SHOWN LIGHTER. EXISTING WIRING IN THE MAIN CONTROL PANEL IS NOT LABELED. CONTRACTOR SHALL BE RESPONSIBLE FOR VERIFYING EACH CIRCUIT TO BE RECONNECTED TO THE NEW PLC AS SHOWN IN THESE DRAWINGS. REFER TO THE KEYNOTES IN THESE DRAWINGS DESCRIBING CONDUIT SIZES AND WIRE COUNTS, AND TO THE ORIGINAL FACILITY DRAWINGS DATED OCTOBER, 1986 FOR EQUIPMENT LAYOUTS, CONDUIT RUNS AND CONNECTION DIAGRAMS. EXISTING WIRING IN THE MAIN CONTROL PANEL THAT IS NOT SHOWN IN THESE DRAWINGS SHALL BE COILED AND ABANDONED IN PLACE IN THE NEW CONTROL PANEL.

RCE
RICHARD CANNEY ENGINEERING
12381 E. FORT LOWELL ROAD
TUCSON, ARIZONA 85749
PHONE: (520) 615-8006
FAX: (520) 615-6495
E-MAIL: canney@att.net

NO.	REVISION	APPV'D.	DATE
1	REVISIONS DURING BIDDING	RPC	7/18/16

Registered Professional Engineer (Civil)
CERTIFICATE NO. 14502
RICHARD P. CANNEY
9/8/15
ARIZONA U.S.A.
EXPIRES 6/30/17

DESIGNED BY : R.P.C.
DRAWN BY : R.P.C.
CHK'D BY (DESIGN) : M.F.T.
CHK'D BY (FIELD ENGR) :
FIELD BOOK NO. :

PIMA COUNTY
REGIONAL WASTEWATER
RECLAMATION DEPARTMENT

PIMA COUNTY
WASTEWATER RECLAMATION
201 North Stone Avenue * Tucson, Arizona 85701-1207 * Phone: (520) 740-6500

CONTINENTAL RANCH REGIONAL PUMP STATION UPGRADE DESIGN ANALOG INPUT AND OUTPUT WIRING DIAGRAM

R-2014-079
G-2014-078

Date: SEPT. 8, 2015

SCALE: HORIZ. : N/A
VERT. : N/A

SHEET NO. : E35

RCE JOB No. 13107
E:\2013\13107\Drawings\E35-10 LOOP DIAGRAM-2.dwg