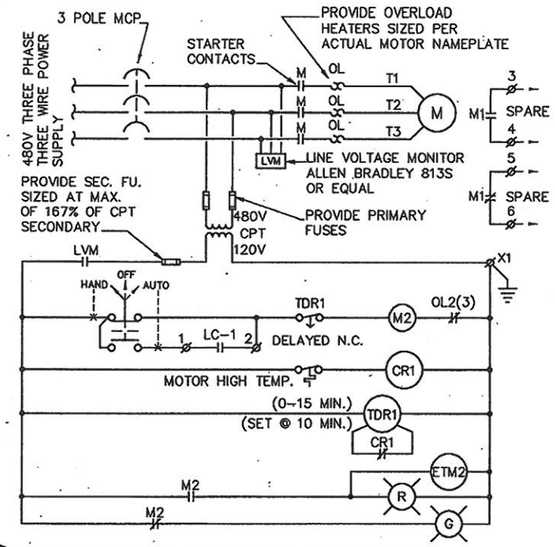

4 MIXING PUMP CONTROL DIAGRAM (BID SCHEDULE #1)
NOT TO SCALE (TYPICAL OF THREE)

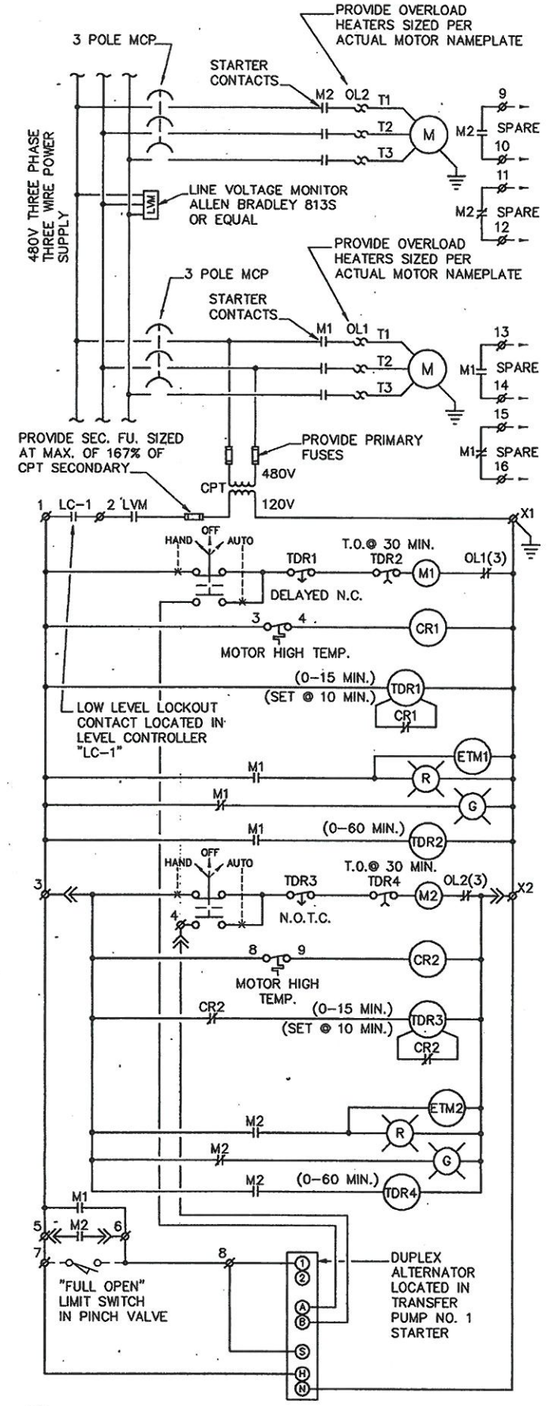

3 TRANSFER PUMPS CONTROL SCHEMATIC
NOT TO SCALE (BID SCHEDULE #1)

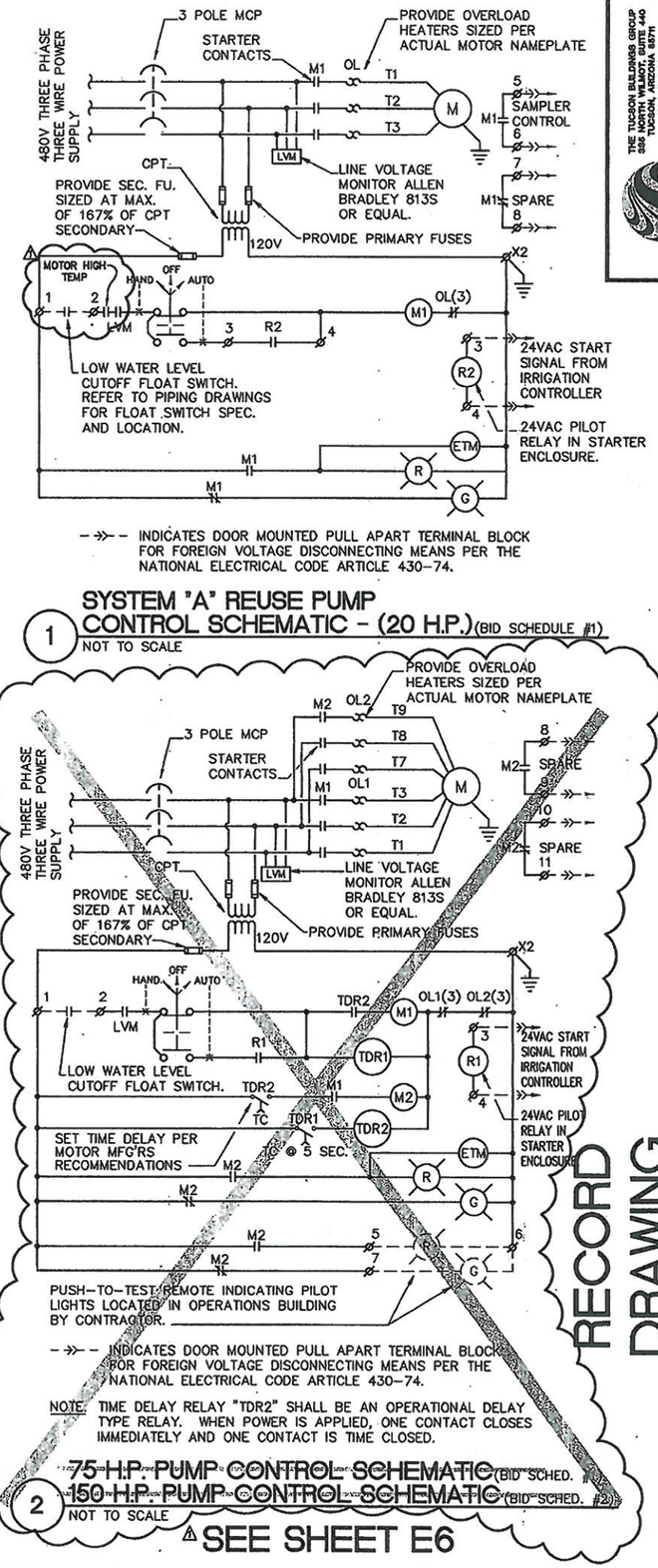

1 SYSTEM "A" REUSE PUMP CONTROL SCHEMATIC - (20 H.P.) (BID SCHEDULE #1)
NOT TO SCALE

2 ~~75 H.P. PUMP CONTROL SCHEMATIC~~ (BID SCHED. #1)
~~150 H.P. PUMP CONTROL SCHEMATIC~~ (BID SCHED. #2)
NOT TO SCALE

SEE SHEET E6

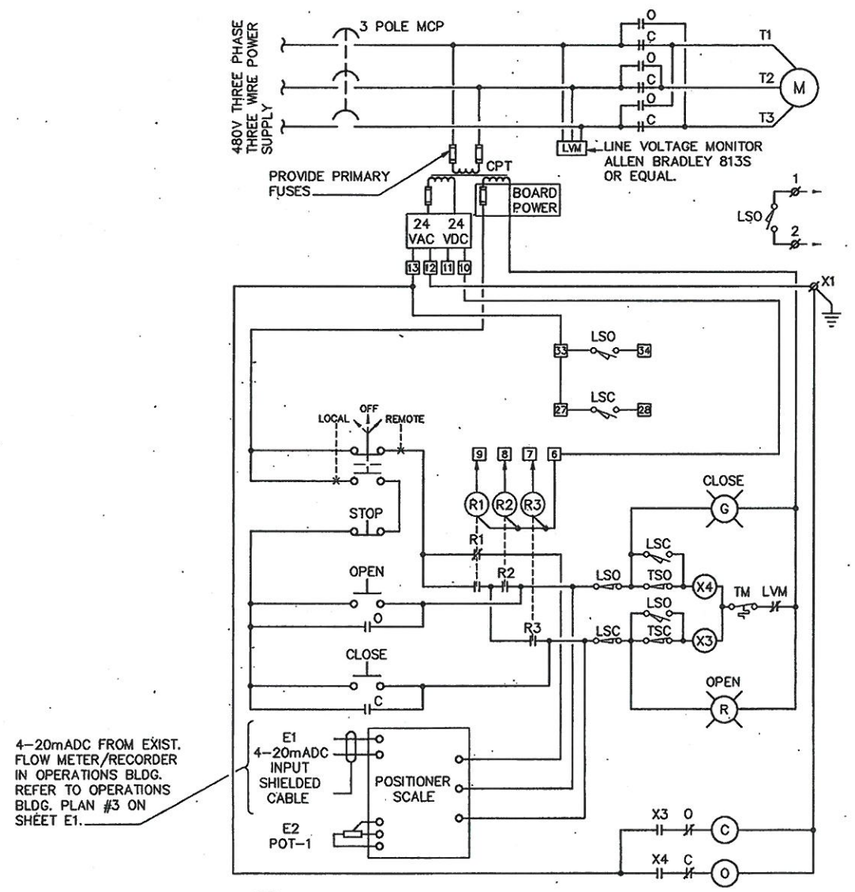

5 VALVE CONTROL DIAGRAM (BID SCHEDULE #1)
NOT TO SCALE

RECORD DRAWING
STANTEC CONSULTING INC.
ADDED AS-BUILT INFORMATION
PROVIDED BY CONTRACTOR

THE TUCSON BUILDING GROUP
535 NORTH WILMOT, SUITE 440
TUCSON, ARIZONA 85711
(520) 747-6600
www.stantec.com
tucson@stantec.com
Project No. 85100335

Stantec

NO.	REVISION	BY	APPV'D.	DATE
1	ADDED AS-BUILT INFORMATION			7-11-01

DESIGNED BY: A. BORINGS
DRAWN BY: A. BORINGS
CHK'D BY (FIELD TEST): B.B.
CHK'D BY (TUCSON): B.B.
FIELD BOOK NO.:

PIMA COUNTY
WASTEWATER MANAGEMENT DEPARTMENT
201 North Stone Avenue • Tucson, Arizona 85701-1207 • Phone: (602)740-6500

AVRA VALLEY WWTF
EQUALIZATION, EFFLUENT STORAGE, AND BLACK WASH SPRAYFIELD
CONTROL SCHEMATICS

C-299

DATE: 8/18/2000
SCALE: HORIZ.: AS NOTED
VERT.: AS NOTED
SHEET NO.: E3
18 OF 20

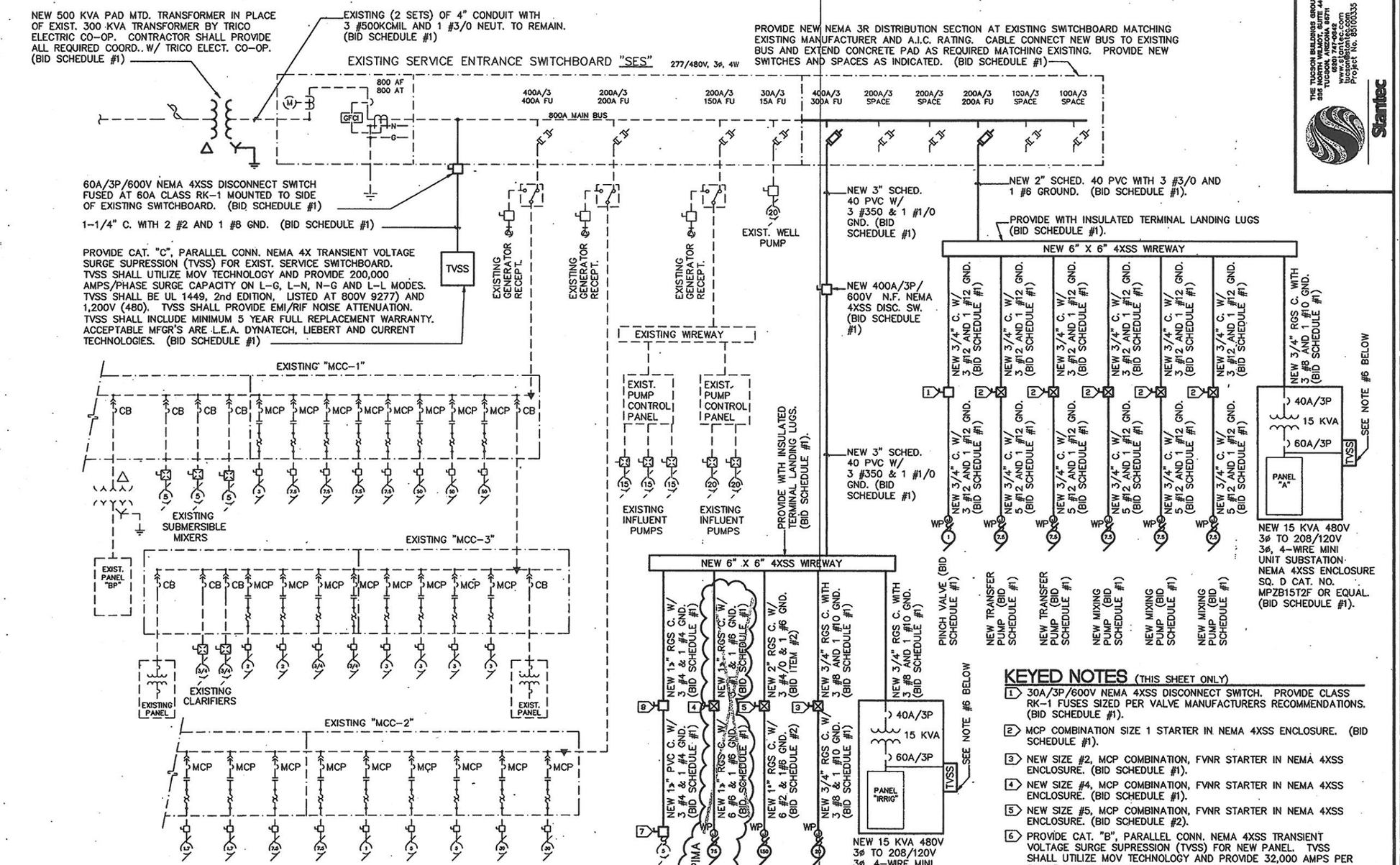

LOAD CALCULATION (BID SCHED. #1)

(EXISTING SERVICE IS RATED 800A @277/480V, 3-PHASE, 4-WIRE)

HIGHEST KW DEMAND OVER LAST 12 MONTHS PER TRICO ELECTRIC CO-OP	=	234.1 KW
EXISTING LOAD X 125% PER N.E.C. 220-35	=	292.6 KW
292.6 KW X 1000 ÷ 80% P.F.	=	365,781 VA
LOAD ADDED THIS PROJECT:		
LARGEST MOTOR X 125%	=	99,766 VA
OTHER MOTORS AT CONNECTED	=	86,556 VA
MISC. LOAD AT CONNECTED	=	15,150 VA
TOTAL CODE LOAD	=	567,253 VA

566,077 VA ÷ (480V X 1.73) = 682.2A

LOAD CALCULATION (BID SCHED. #2)

(EXISTING SERVICE IS RATED 800A @277/480V, 3-PHASE, 4-WIRE)

HIGHEST KW DEMAND OVER LAST 12 MONTHS PER TRICO ELECTRIC CO-OP	=	234.1 KW
EXISTING LOAD X 125% PER N.E.C. 220-35	=	292.6 KW
292.6 KW X 1000 ÷ 80% P.F.	=	365,781 VA
LOAD ADDED THIS PROJECT:		
LARGEST MOTOR X 125%	=	187,361 VA
OTHER MOTORS AT CONNECTED	=	86,556 VA
MISC. LOAD AT CONNECTED	=	15,150 VA
TOTAL CODE LOAD	=	654,848 VA

653,672 VA ÷ (480V X 1.73) = 787.6A

KEYED NOTES (THIS SHEET ONLY)

1. 30A/3P/600V NEMA 4XSS DISCONNECT SWITCH. PROVIDE CLASS RK-1 FUSES SIZED PER VALVE MANUFACTURERS RECOMMENDATIONS. (BID SCHEDULE #1).
2. MCP COMBINATION SIZE 1 STARTER IN NEMA 4XSS ENCLOSURE. (BID SCHEDULE #1).
3. NEW SIZE #2, MCP COMBINATION, FVNR STARTER IN NEMA 4XSS ENCLOSURE. (BID SCHEDULE #1).
4. NEW SIZE #4, MCP COMBINATION, FVNR STARTER IN NEMA 4XSS ENCLOSURE. (BID SCHEDULE #1).
5. NEW SIZE #5, MCP COMBINATION, FVNR STARTER IN NEMA 4XSS ENCLOSURE. (BID SCHEDULE #2).
6. PROVIDE CAT. "B", PARALLEL CONN. NEMA 4XSS TRANSIENT VOLTAGE SURGE SUPRESSION (TVSS) FOR NEW PANEL. TVSS SHALL UTILIZE MOV TECHNOLOGY AND PROVIDE 32,000 AMPS PER PHASE SURGE CAPACITY ON L-G, L-N, N-G AND L-L MODES. TVSS SHALL BE UL-1449, 2nd EDITION, LISTED AT 800V (208). TVSS SHALL PROVIDE EMI/RFI NOISE ATTENUATION. TVSS SHALL INCLUDE MIN. 5 YEAR FULL REPLACEMENT WARRANTY. ACCEPTABLE MFGR'S. ARE L.E.A. DYNATECH, LIEBERT AND CURRENT TECHNOLOGIES. (BID SCHEDULE #1).
7. 30A/3P/600V NEMA 4XSS DISCONNECT SWITCH FUSED AT 15A CLASS RK-1, (BID SCHEDULE #1).
8. 30A/3P/600V NEMA 4XSS NON-FUSED DISCONNECT SWITCH MOUNTED ON EQUIPMENT RACK #2. (BID SCHEDULE #1).

1 ONE-LINE DIAGRAM
NOT TO SCALE

(BID SCHEDULE #1 UNLESS OTHERWISE NOTED)

RECORD DRAWING

STANTEC CONSULTING INC.

ADDED AS-BUILT INFORMATION PROVIDED BY CONTRACTOR

THE TUCSON BUILDINGS GROUP
835 NORTH WILMOT, SUITE 440
TUCSON, ARIZONA 85711
520-747-0506
www.stantec.com
Project Number: 85100335
Project No. 85100335
Stantec

NO.	REVISION	BY	DATE
2			
1	ADDED AS-BUILT INFORMATION	TJD	7-11-01

REVIEWED BY: A. BRUWERS
DRAWN BY: A. BRUWERS
CHKD BY (TESTING): TJD
CHKD BY (FIELD ENGR.):
FIELD BOOK NO.:

Registered Professional Engineer (Electrical) CERTIFICATE NO. 20536 DAVID A. BULLES Date Signed 7-11-01 ARIZONA, U.S.A.

PIMA COUNTY WASTEWATER MANAGEMENT DEPARTMENT

201 North Stone Avenue • Tucson, Arizona 85701-1207 • Phone: (602)740-6500

AVRA VALLEY WWTF
EQUALIZATION, EFFLUENT STORAGE, AND BLACK WASH SPRAYFIELD
ONE-LINE DIAGRAM AND LOAD CALCULATIONS

C-299

DATE: 8/18/2000
SCALE: HORIZ.: AS NOTED
VERT.: AS NOTED
SHEET NO: 19 of 20 E4

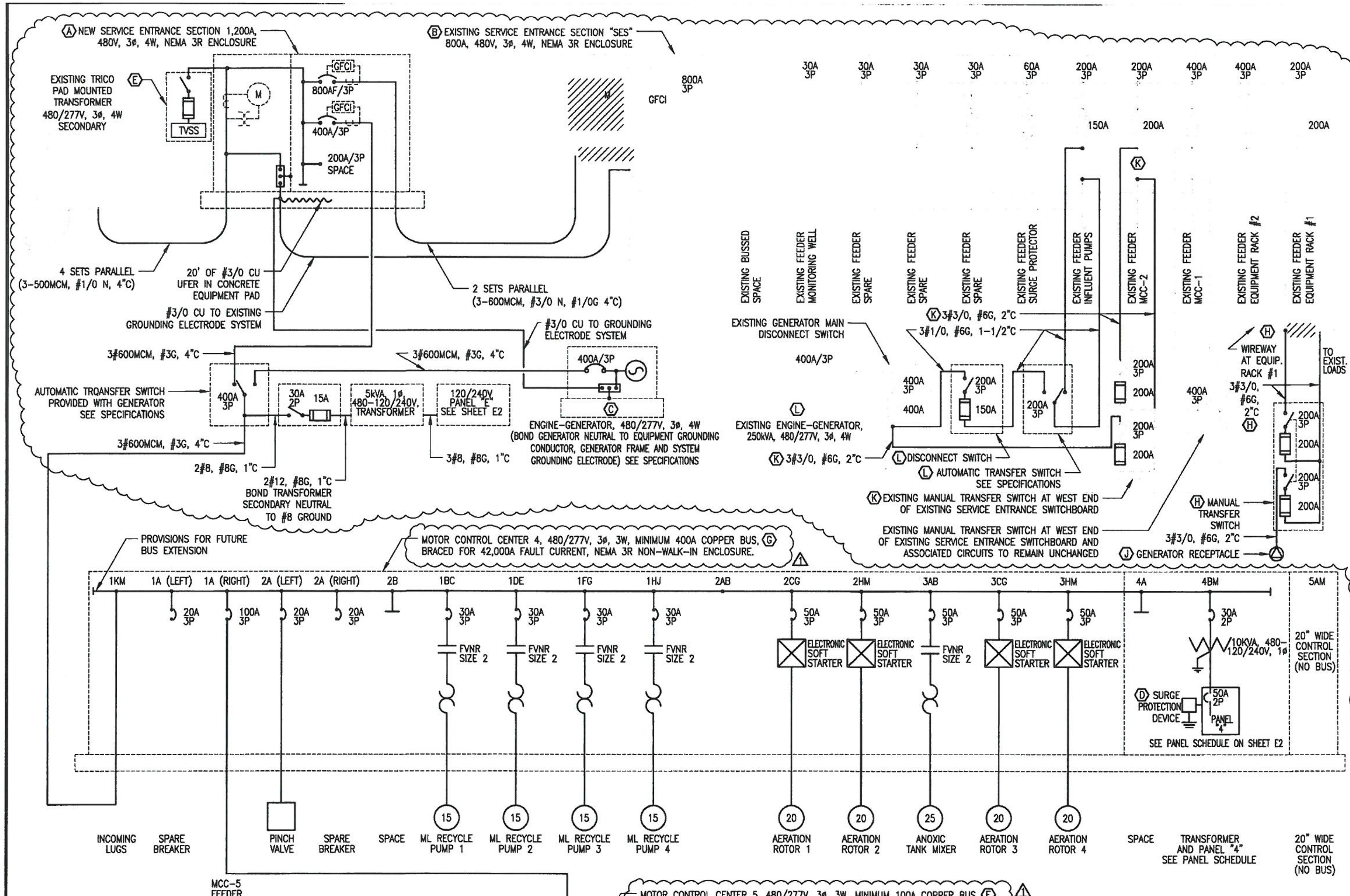

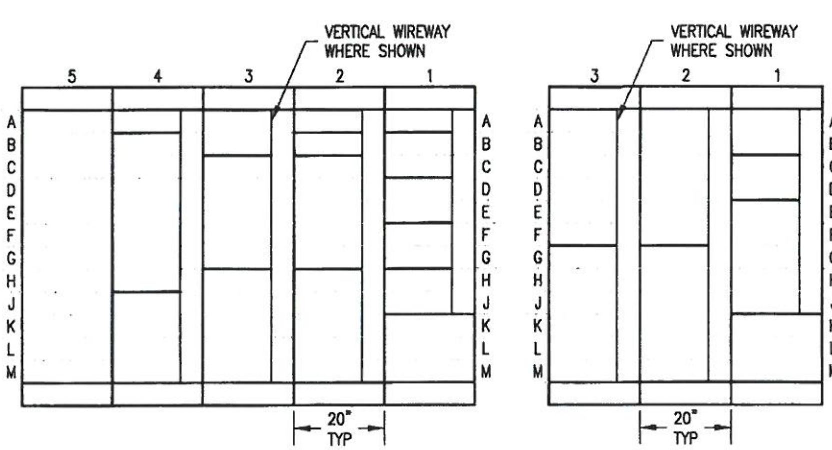

MCC 4 ELEVATION
N.T.S.

MCC 5 ELEVATION
N.T.S.

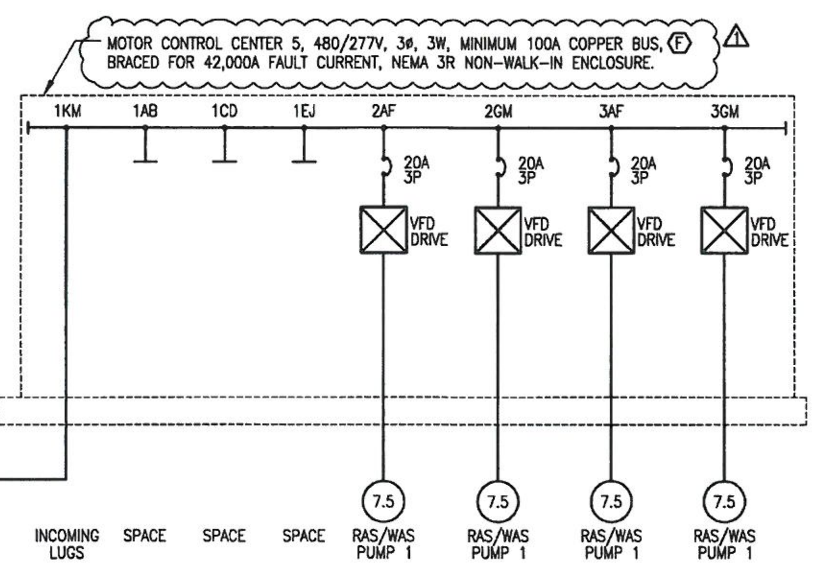

ELECTRICAL SINGLE LINE DIAGRAM

RECORD DRAWING

These record drawings have been prepared on information provided by the Contractor and others. Kennedy/Jenks Consultants has not verified the accuracy or completeness of the information provided by them and does not warrant the accuracy or completeness of these Record Drawings. Users of these Record Drawings assume all risk of loss resulting from their use.
User of these documents provided in electronic form are cautioned against use without first determining whether changes may have been made to these documents subsequent to their preparation by Kennedy/Jenks Consultants. Original hard copies of these documents are the only true version of the Record Drawings prepared by Kennedy/Jenks Consultants.

SHORT CIRCUIT

THE EXPECTED FAULT CURRENT AT THE TRANSFORMER SECONDARY IS 32,600 AMPERES FOR AN 1,200 AMPERE SERVICE. MAXIMUM MOTOR CONTRIBUTION IS 4(TOTAL OF ALL MOTOR FULL LOAD CURRENTS=1,200A MAXIMUM)=4,800A, PER BUSS METHOD. TOTAL AVAILABLE FAULT IS 32,600A+4,800A= 37,400A. ALL EQUIPMENT SHALL BE SERIES RATED FOR A 37,400A FAULT CURRENT, MINIMUM. VERIFY 32,600A UTILITY FAULT IS NOT EXCEEDED FOR FINAL INSTALLATION WITH UTILITY COMPANY PRIOR TO ORDERING EQUIPMENT.

KEYNOTES

A. 480/277V, 3ø, 4W, 1,200A, 42,000AIC SERVICE SWITCHBOARD. UNIT SHALL BE FREESTANDING, WITH COPPER BUS, NEMA 3R ENCLOSURE, UTILITY METERING SECTION PER UTILITY REQUIREMENTS, AND 100% RATED FEEDER CIRCUIT BREAKERS WITH SOLID STATE TRIP UNITS HAVING LONG-TIME, SHORT TIME, INSTANTANEOUS AND GROUND FAULT PROTECTIVE CIRCUITS. BOLT TO 3000 PSI CONCRETE SLAB SIZED FOR UNIT PROVIDED, 5" THICK, WITH #3@16" O.C. REINFORCING.

B. EXISTING SERVICE ENTRANCE SECTON UTILITY METERING EQUIPMENT SHALL BE ABANDONED. DISCONNECT NEUTRAL GROUNDING CONNECTION. NEUTRAL SHALL ONLY BE GROUNDED IN THE NEW SERVICE ENTRANCE SETION BEING PROVIDED UNDER THIS CONTRACT.

C. GENERATOR NEUTRAL SHALL BE BONDED TO THE GENERATOR FRAME. THE NEUTRAL SHALL NOT BE USED AS A CURRENT CARRYING CONDUCTOR IN THIS SYSTEM. EQUIPMENT GROUNDING CONDUCTOR RUN TO MAIN SWITCHBOARD VIA TRANSFER SWITCH SHALL BE BONDED TO GENERATOR FRAME.

D. PANEL "4" SURGE PROTECTOR, 120/240V, 1ø, 3W, 80,000A PER PHASE CAPACITY, STATUS LED, UL1449 LISTED, LIEBERT ACV120S201R, INSTALLED PER MANUFACTURER'S RECOMMENDATIONS.

E. SERVICE SURGE PROTECTOR, 480/277V, 3ø, 4W, 160,000A PER PHASE CAPACITY, STATUS LED, FUSED DISCONNECT SWITCH, UL1449 LISTED, LIEBERT SI016277YARSE, OR EQUAL, INSTALLED PER MANUFACTURER'S RECOMMENDATIONS.

F. MCC-5 SHALL BE PROVIDED WITH TWO FULLY REDUNDANT 120VAC REFRIGERANT TYPE AIR CONDITIONING UNITS TO PROVIDE COOLING FOR THE VARIABLE FREQUENCY DRIVE UNITS.

G. MCC-4 SHALL BE PROVIDED WITH A THREMOSTATICALLY CONTROLLED, 120VAC VENTILATION FAN FOR EQUIPMENT COOLING.

H. MANUAL TRANSFER SWITCH, NEMA 3R, DUAL 200 AMPERE FUSED SWITCHES WITH CLASS R TIME DELAY DUAL ELEMENT FUSES, 480 VOLT, 60HZ, 3 POLE, 100,000 AMPERE MINIMUM SHORT CIRCUIT RATING, THREE POSITION OPERATING HANDLE WITH CENTER OFF POSITION, UL LISTED, CUTLER-HAMMER DT364FRK, OR EQUAL. MOUNT SWITCH ON NORTH SIDE OF EXISTING EQUIPMENT RACK #1 ("EQUALIZATION BASIN EQUIPMENT RACK" SHOWN ON DRAWING E100). INTERCEPT EXISTING #3/0 FEEDER TO RACK IN EXISTING WIREWAY AND CONNECT TRANSFER SWITCH AS SHOWN. PROVIDE ENGRAVED NAMEPLATE ON FRONT OF SWITCH ENCLOSURE READING "TURN OFF ALL LOADS BEFORE TRANSFERRING POWER SOURCES".

J. GENERATOR RECEPTACLE SHALL BE 200 AMPERE, 600VAC, 3 WIRE, 4 POLE, APPLETON AR20034-RS "REVERSE SERVICE" CONFIGURATION TO ACCEPT A HOT PLUG FROM A PORTABLE GENERATOR. PROVIDE APPLETON RECEPTACLE MOUNTING BOX WITH 2" CONDUIT HUB. MOUNT UNIT ADJACENT TO MANUAL TRANSFER SWITCH (SEE KEYNOTE H).

K. EXISTING MANUAL TRANSFER SWITCH FOR INFLUENT PUMPING STATION SHALL BE RECONNECTED AS SHOWN TO FEED MCC-2. REPLACE EXISTING CONDUIT AND WIRING TO SWITCH AND RECONNECT CIRCUITS AS SHOWN. RELPACE EXISTING FUSES WITH 200 AMPERE FUSES. PROVIDE ENGRAVED NAMEPLATE ON FRONT OF SWITCH ENCLOSURE READING "TURN OFF ALL LOADS AT MCC-2 BEFORE TRANSFERRING POWER SOURCES". PROVIDE AUTOMATIC TRANSFER SWITCH FOR INFLUENT PUMPING STSTION PER KEYNOTE L.

L. AUTOMATIC TRANSFER SWITCH AND FUSED DISCONNECT SWITCH SHALL BE FURNISHED AND INSTALLED AS SHOWN TO AUTOMATICALLY CONTROL THE EXISTING ENGINE-GENERATOR TO SUPPLY STANDBY POWER TO THE INFLUENT PUMPING STATION. PROVIDE 6#14, #14G, 1"C (4#14 ARE SPARE) FROM THE TRANSFER SWITCH TO THE EXISTING ENGINE-GENERATOR CONTROL PANEL AND CONNECT 2#14 TO THE EXISTING "AUTO" CONTROL CIRCUIT OF THE ENGINE-GENERATOR TO PROVIDE AUTOMATIC CONTROL. SEE "SERVICE EQUIPMENT ELECTRICAL PLAN" ON DRAWING E101.

LOAD SUMMARY

LOADS AT 480 VOLT, 3ø:

PEAK DEMAND FOR 12 MONTH PERIOD ENDING NOVEMBER 2005 PER TRICO CO-OP RECORDS = 385.880kW

THEREFORE, EXISTING LOAD PER NEC 220.35: (385.880kW/0.48kV x 1.73 x 0.80 PF) x 125%		726.2A
LOADS BEING ADDED AT MCC-5:		
RAS/WAS PUMP 1 (7.5HP)	11.0A	
RAS/WAS PUMP 2 (7.5HP)	11.0A	
RAS/WAS PUMP 3 (7.5HP)	11.0A	
RAS/WAS PUMP 4 (7.5HP)	11.0A	
MCC-5 SUBTOTAL	44.0A	
25% LARGEST MOTOR (RAS/WAS PUMP 1 – 7.5HP)	2.8A	
MCC-5 MINIMUM FEEDER AMPACITY	46.8A	
LOADS BEING ADDED AT MCC-4:		
AERATION ROTOR 1 (20HP)	27.0A	
AERATION ROTOR 2 (20HP)	27.0A	
AERATION ROTOR 3 (20HP)	27.0A	
AERATION ROTOR 4 (20HP)	27.0A	
ML RECYCLE PUMP 1 (15HP)	21.0A	
ML RECYCLE PUMP 2 (15HP)	21.0A	
ML RECYCLE PUMP 3 (15HP)	21.0A	
ML RECYCLE PUMP 4 (15HP)	21.0A	
ANOXIC TANK MIXER (25HP)	34.0A	
PINCH VALVE MOTOR OPERATOR (0.5HP)	1.1A	
10kVA, 480-120/240V, 1ø TRANSFORMER	20.8A	
MCC-5 (LOAD FROM ABOVE)	44.0A	
MCC-4 SUBTOTAL	291.9A	291.9A
25% LARGEST MOTOR (ANOXIC TANK MIXER – 25HP)	8.5A	
MCC-4 MINIMUM FEEDER AMPACITY	300.4A	
LOADS BEING ADDED AT PANEL "E"		
5kVA, 480-120/240V, 1ø TRANSFORMER	10.4A	10.4A
TOTAL PLANT LOAD		1,028.5A
25% LARGEST ADDED MOTOR (ANOXIC TANK MIXER – 25HP)		8.5A
MINIMUM REQUIRED SERVICE AMPACITY		1,037.0A

PROVIDE A 1,200 AMPERE, 480 VOLT, 3ø, 4W SERVICE

JUNE 2007

RICHARD CANNEY ENGINEERING
5741 E. PLACITA VARAS
TUCSON, ARIZONA 85750
VOICE: (520) 615-8006
FAX: (520) 615-8495
canney@worldnet.att.net

Kennedy/Jenks Consultants
698 EAST WETMORE ROAD, SUITE 440
TUCSON, ARIZONA 85705
TEL (520) 293-0889 FAX (520) 293-0699

NO.	REVISION	APPV'D.	DATE
1	ADDENDUM 1		4/18/06
2	RECORD DRAWING	KAT	08/28/07

DESIGNED BY: RPC
DRAWN BY: RPC
CHK'D BY (DESIGN): RPC
CHK'D BY (FIELD ENGR):
FIELD BOOK NO:

PIMA COUNTY WASTEWATER MANAGEMENT DEPARTMENT
201 North Stone Avenue • Tucson, Arizona 85701-1207 • Phone: (520) 740-6500

AVRA VALLEY WWTF
FACILITY EXPANSION PLAN
ELECTRICAL SINGLE LINE DIAGRAM

C346

DATE: JAN. 2006
SCALE HORIZ.: N/A
VERT.: N/A
SHEET NO.: E-10

JOB No. 05136
05\0593017 Avra Valley WWTP\Deliverable\Record Drawings\E10.dwg 7-05-07 03:02:38 PM

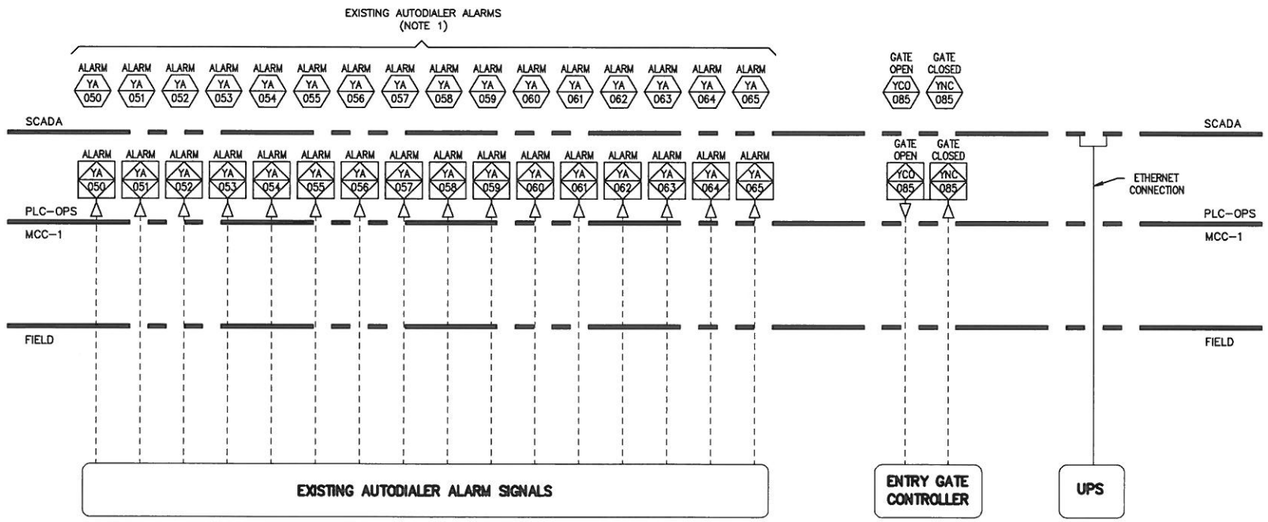

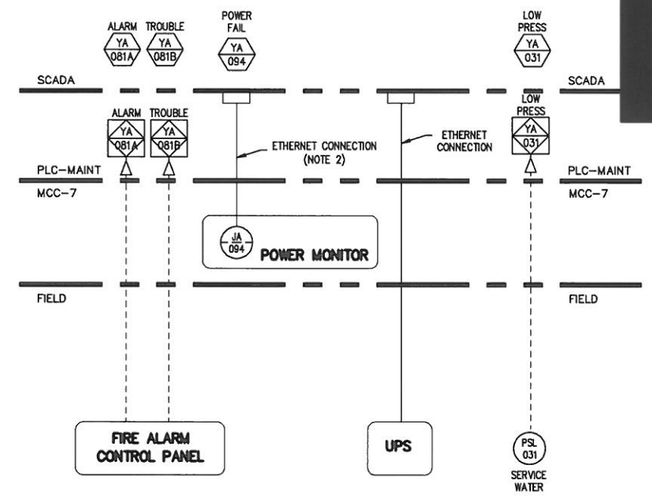

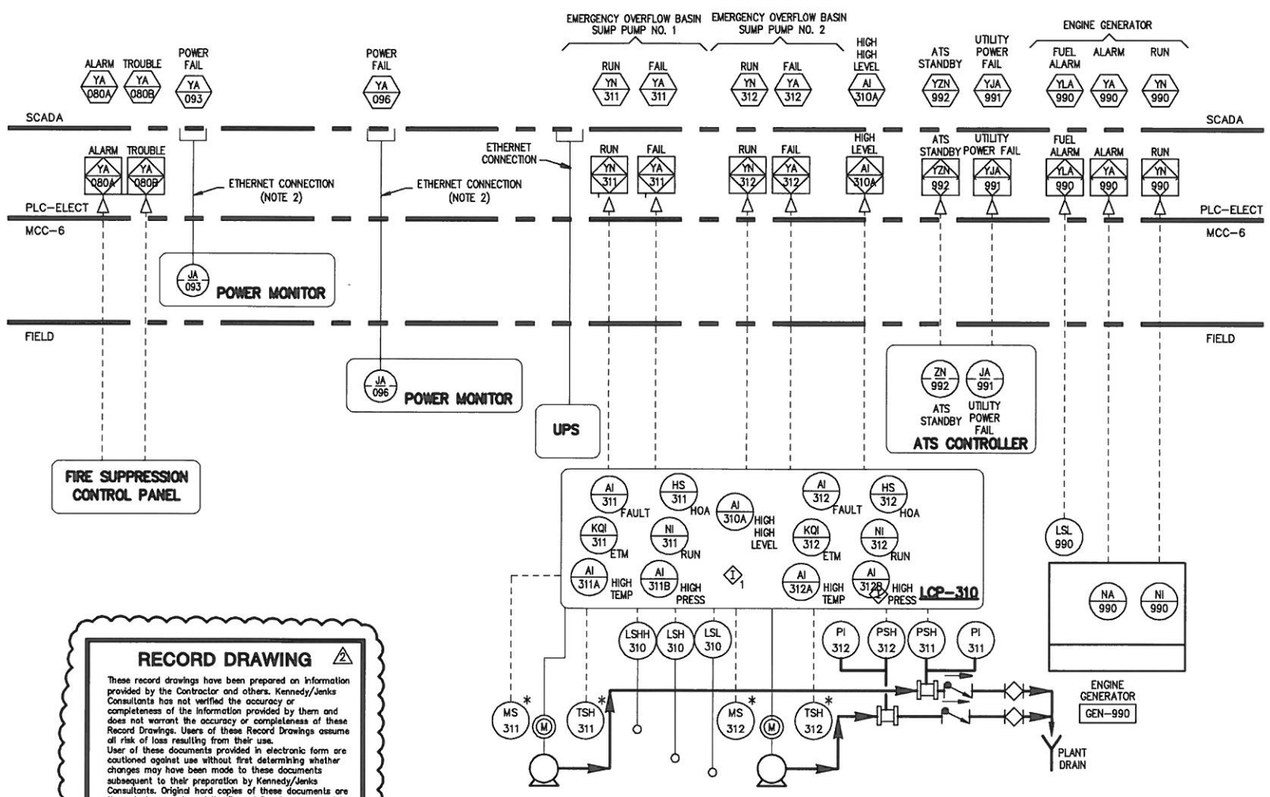

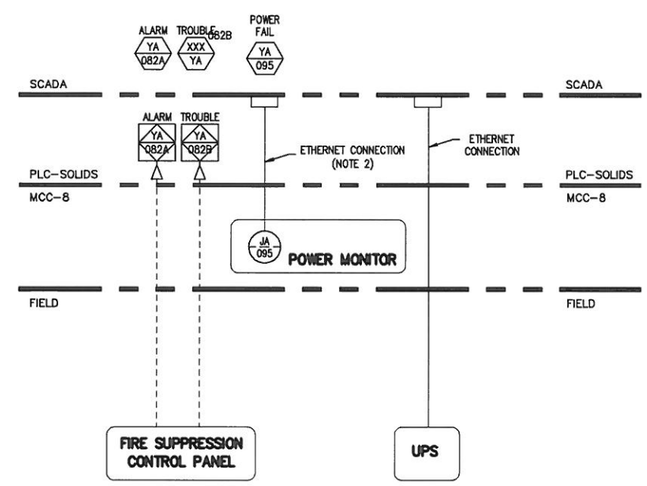

RECORD DRAWING

These record drawings have been prepared on information provided by the Contractor and others. Kennedy/Jenks Consultants has not verified the accuracy or completeness of the information provided by them and does not warrant the accuracy or completeness of these Record Drawings. Users of these Record Drawings assume all risk of loss resulting from their use.
User of these documents provided in electronic form are cautioned against use without first determining whether changes may have been made to these documents subsequent to their preparation by Kennedy/Jenks Consultants. Original hard copies of these documents are the only true version of the Record Drawings prepared by Kennedy/Jenks Consultants.

NOTES:

1. REMOVE EXISTING VERBATIM AUTODIALER AND RETURN TO OWNER. RE-PULL AND RE-TERMINATE EXISTING AUTODIALER ALARM SIGNALS TO NEW PLC AND CONFIGURE AS ALARMS IN DIALER SOFTWARE.
2. THE FOLLOWING SIGNALS SHALL BE DISPLAYED AT SCADA AT A MINIMUM:
   - PHASE A, B, C, N, AVERAGE CURRENT
   - PHASE A, B, C CURRENT UNBALANCE
   - PHASE A-B, B-C, C-A, AVERAGE VOLTAGE
   - PHASE A-N, B-N, C-N VOLTAGE
   - TOTAL POWER FACTOR
   - TOTAL REAL POWER
   - TOTAL REACTIVE POWER
   - ENCLOSURE TEMPERATURE
3. * MOISTURE (LEAK)/HIGH TEMPERATURE RELAYS TO BE PROVIDED BY THE PUMP MANUFACTURER, OPERATE ON 120 VAC AND BE DELIVERED TO THE SYSTEM INTEGRATOR FOR INCORPORATION INTO THE CONTROL PANEL.

ELECTRICAL INTERLOCK LEGEND

1. SHUTDOWN OF SUMP PUMPS SHALL OCCUR AFTER 15 SECONDS (ADJUSTABLE 0-90 SECONDS) ON LOW SUMP LEVEL (LSL). INTERLOCK SHALL SEAL AND LOCK OUT SLUDGE PUMP START UNTIL LOW LEVEL CONDITION IS RESET BY HIGH LEVEL (LSH). SUMP PUPS SHALL ALTERNATE. LEAD PUMP SHALL START ON HIGH LEVEL (LSH) AND LAG PUMP SHALL START ON HIGH HIGH LEVEL (LSHH)

MALCOLM PIRNIE

NO.	REVISION	APPV'D.	DATE
1	GMP CONFORM SET	KAT/VL	4/08
2	RECORD DRAWING	P.K.	3/09

DESIGNED BY: JAM
DRAWN BY: JAM
CHK'D BY (DESIGN): JAM
CHK'D BY (FIELD DWG): JJH
FIELD BOOK NO.:

PIMA COUNTY
WASTEWATER MANAGEMENT DEPARTMENT
201 North Stone Avenue • Tucson, Arizona 85701-1207 • Phone: (520) 740-6500

AVRA VALLEY WWTF
4.0 MGD FACILITY EXPANSION
MISCELLANEOUS I/O SIGNALS
P&ID

C-351
DATE: APRIL 2007
SCALE HORIZ: NTS
VERT:
SHEET NO: 1-8
OF

XREFS: ...\Vol1\j9741191B.dwg IMAGES: None
User: CORNEJO Spec: PIRNIE STANDARD File: K:\PIMA\Vol1\41191B\pm-105411918.DWG Scale: 1:1 Date: 4/17/2007 Time: 9:42 Layout: 1-8

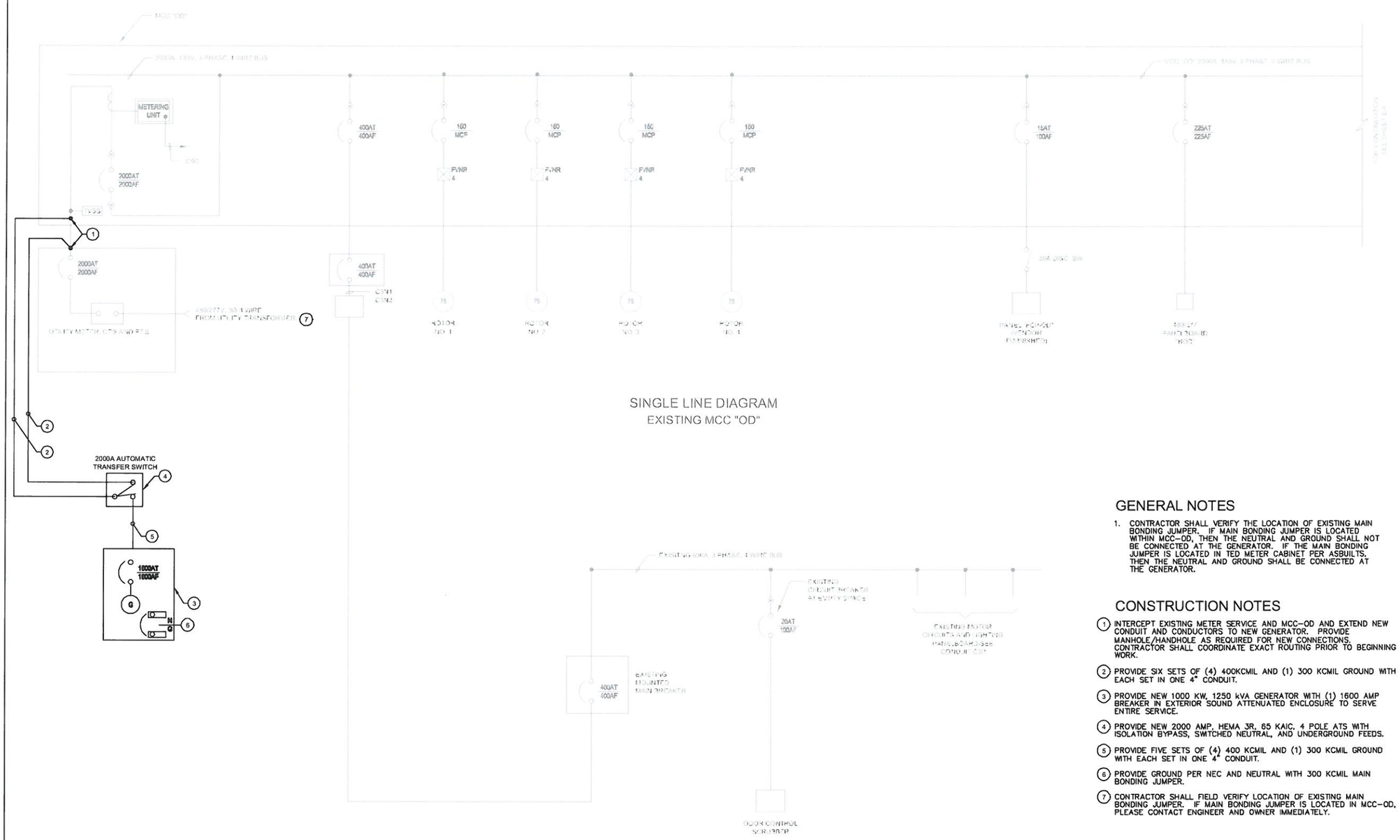

SINGLE LINE DIAGRAM
EXISTING MCC "OD"

SINGLE LINE DIAGRAM
EXISTING MCC "IM"
AT EXISTING OPERATIONS BLDG

GENERAL NOTES

1. CONTRACTOR SHALL VERIFY THE LOCATION OF EXISTING MAIN BONDING JUMPER. IF MAIN BONDING JUMPER IS LOCATED WITHIN MCC-OD, THEN THE NEUTRAL AND GROUND SHALL NOT BE CONNECTED AT THE GENERATOR. IF THE MAIN BONDING JUMPER IS LOCATED IN TED METER CABINET PER ASBUILTS, THEN THE NEUTRAL AND GROUND SHALL BE CONNECTED AT THE GENERATOR.

CONSTRUCTION NOTES

1. INTERCEPT EXISTING METER SERVICE AND MCC-OD AND EXTEND NEW CONDUIT AND CONDUCTORS TO NEW GENERATOR. PROVIDE MANHOLE/HANDHOLE AS REQUIRED FOR NEW CONNECTIONS. CONTRACTOR SHALL COORDINATE EXACT ROUTING PRIOR TO BEGINNING WORK.
2. PROVIDE SIX SETS OF (4) 400KCMIL AND (1) 300 KCMIL GROUND WITH EACH SET IN ONE 4" CONDUIT.
3. PROVIDE NEW 1000 KW, 1250 kVA GENERATOR WITH (1) 1600 AMP BREAKER IN EXTERIOR SOUND ATTENUATED ENCLOSURE TO SERVE ENTIRE SERVICE.
4. PROVIDE NEW 2000 AMP, HEMA 3R, 65 KAIC, 4 POLE ATS WITH ISOLATION BYPASS, SWITCHED NEUTRAL, AND UNDERGROUND FEEDS.
5. PROVIDE FIVE SETS OF (4) 400 KCMIL AND (1) 300 KCMIL GROUND WITH EACH SET IN ONE 4" CONDUIT.
6. PROVIDE GROUND PER NEC AND NEUTRAL WITH 300 KCMIL MAIN BONDING JUMPER.
7. CONTRACTOR SHALL FIELD VERIFY LOCATION OF EXISTING MAIN BONDING JUMPER. IF MAIN BONDING JUMPER IS LOCATED IN MCC-OD, PLEASE CONTACT ENGINEER AND OWNER IMMEDIATELY.

Exp. Date: 12/31/14

Critical Infrastructure Information
Persons who knowingly publish, divulge, or disclose the information contained herein may be subject to criminal sanctions pursuant to A.R.S. 41-1805

NO.	DATE	REVISION	BY	APVD
-	-	-	-	-

DSGN	DR	CHK	APVD	APPROVED BY
PS	AK	DSH		

PIMA COUNTY REGIONAL WASTEWATER RECLAMATION DEPARTMENT

Green Valley Security Improvements

C-407

Kimley-Horn and Associates, Inc.

ELECTRICAL/SECURITY
ONE-LINE DIAGRAM
- -

VERIFY SCALE
BAR IS ONE INCH ON ORIGINAL DRAWING.
0 1"

DATE	5/1/13
PROJ	#191720001
DWG	GV-ES-600.dwg
SHEET	ES-600

FILENAME: GV-ES-600.dwg PLOT DATE: 05/01/2013 PLOT TIME: 10:49 AM

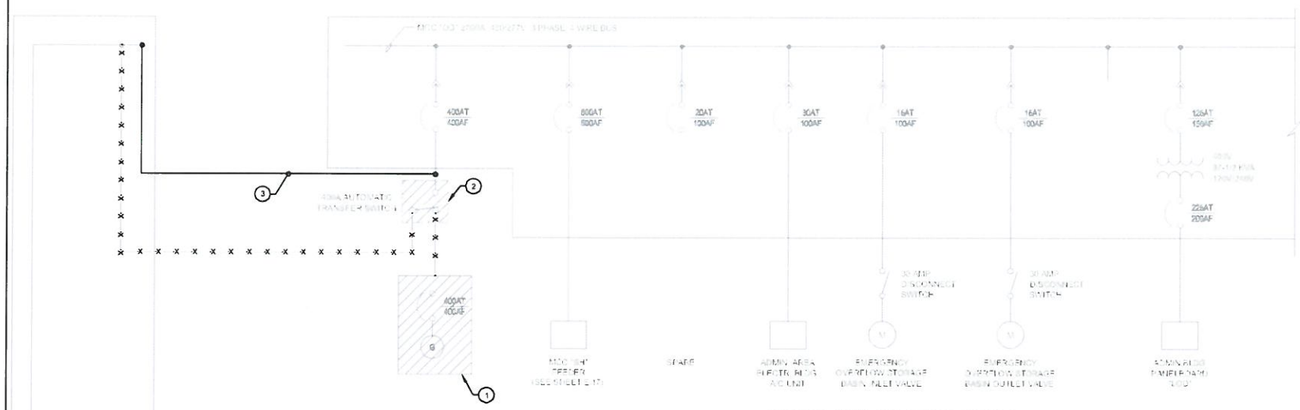

SINGLE LINE DIAGRAM (CONT.)
EXISTING MCC "OD"

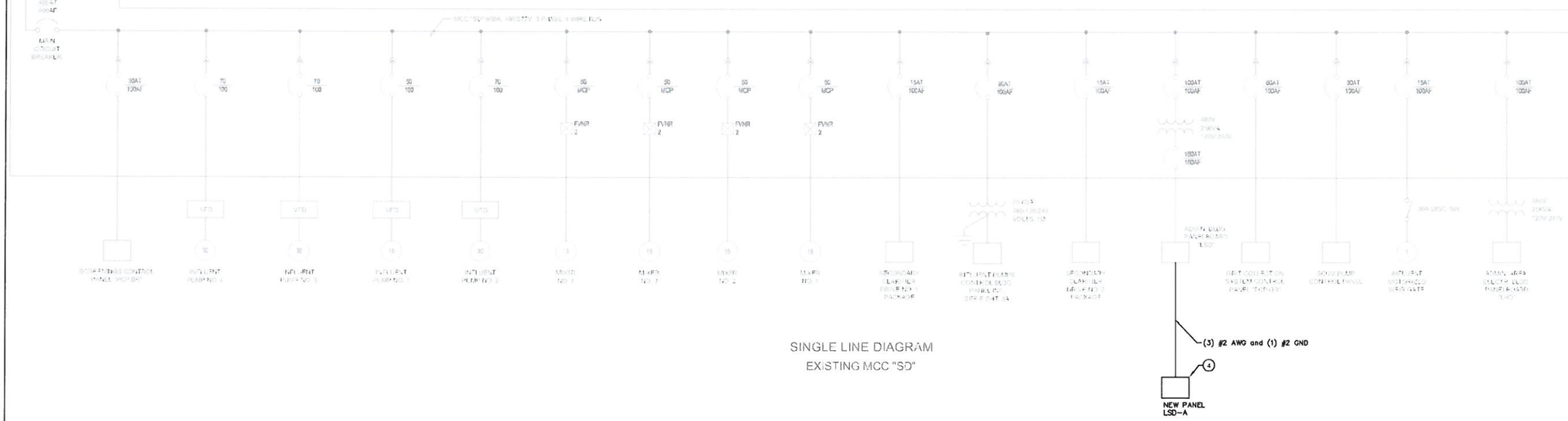

SINGLE LINE DIAGRAM
EXISTING MCC "SD"

CONSTRUCTION NOTES

1. REMOVE EXISTING GENERATOR AFTER NEW GENERATOR IS COMMISSIONED. REMOVE ALL CONDUIT AND CONDUCTORS.
2. REMOVE EXISTING ATS AFTER NEW GENERATOR IS COMMISSIONED.
3. EXTEND NEW TWO SETS OF (4) #3/0 AND (1) #1/0 GROUND IN 2" CONDUIT EACH SET. CONDUIT SHALL BE RIGID TYPE AND SURFACE MOUNTED.
4. PROVIDE NEW NEMA 3R OUTDOOR RATED POWER PANEL WITH LOCKING COVER. PANEL SHALL BE MOUNTED TO WEST EXTERIOR WALL OF MAINTENANCE BUILDING.

Exp. Date 12/31/14

Critical Infrastructure Information
Persons who knowingly publish, divulge, or disclose the information contained herein may be subject to criminal sanctions pursuant to A.R.S. 41-1805

NO.	DATE	REVISION	BY	APVD
-	-	-	-	-

DSGN	DR	CHK	APVD	APPROVED-BY
PS	AK		DSH	

PIMA COUNTY
REGIONAL WASTEWATER
RECLAMATION DEPARTMENT

Green Valley
Security Improvements

C-407

Kimley-Horn and Associates, Inc.

ELECTRICAL/SECURITY
ONE-LINE DIAGRAM
- -

VERIFY SCALE
BAR IS ONE INCH ON ORIGINAL DRAWING.
0 1"

DATE	5/1/13
PROJ	#191720001
DWG	GV-ES-601.dwg
SHEET	ES-601

FILENAME: GV-ES-601.dwg PLOT DATE: 05/01/2013 PLOT TIME: 10:49 AM

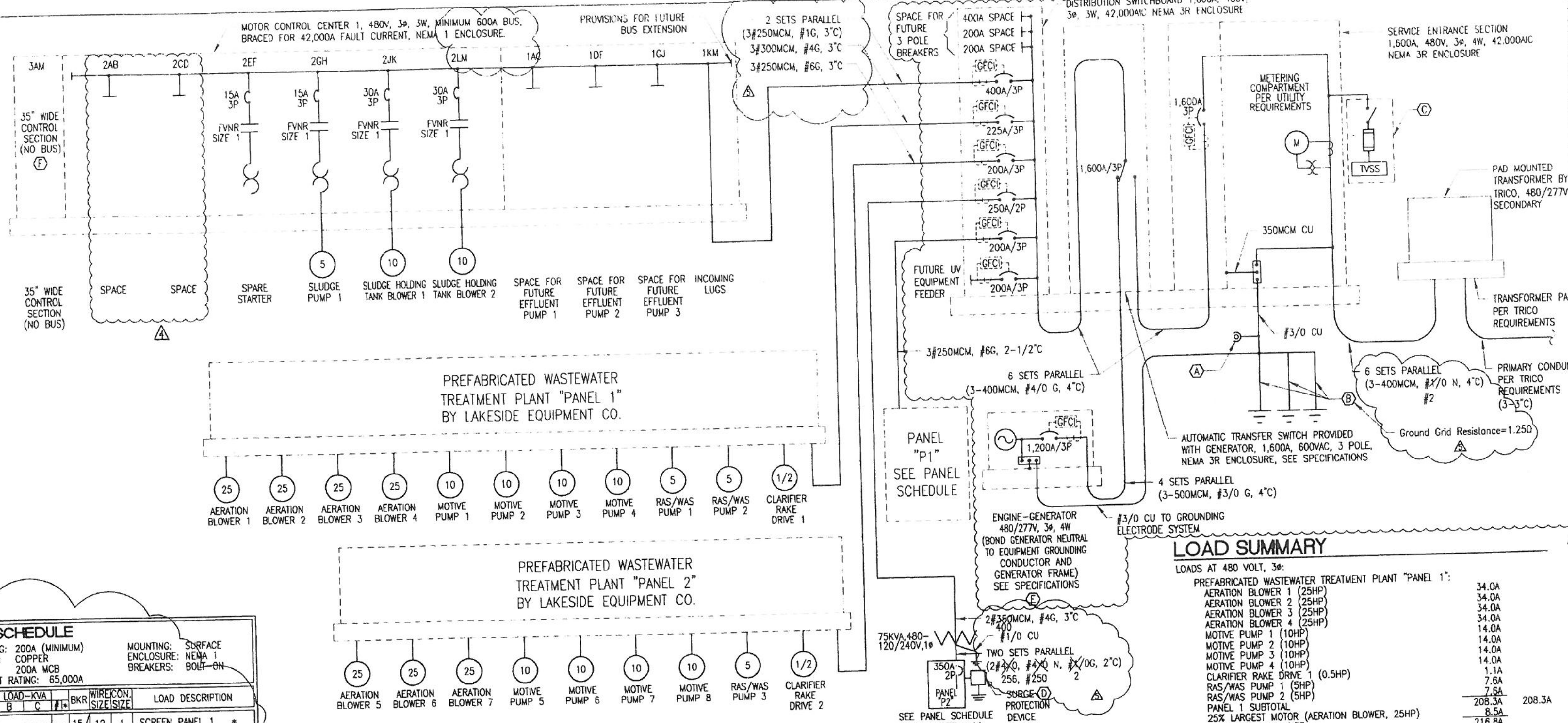

ELECTRICAL SINGLE LINE DIAGRAM

N.T.S.

PANEL SCHEDULE

PANEL: "P1"
VOLTS: 480
PHASE: 3
WIRE: 3

AMPERE RATING: 200A (MINIMUM)
BUS MATERIAL: COPPER
MAIN DEVICE: 200A MCB
SHORT CIRCUIT RATING: 65,000A

MOUNTING: SURFACE
ENCLOSURE: NEMA 1
BREAKERS: BOLT-ON

LOAD DESCRIPTION	CON. SIZE	WIRE SIZE	BKR	*	#	PHASE LOAD-KVA A	B	C	#	*	BKR	WIRE SIZE	CON. SIZE	LOAD DESCRIPTION
SCUM PUMP PANEL 1	1	12	15	N	1	2.02 / ~~0.90~~		0.90	2	N	15	12	1	SCREEN PANEL 1 *
				N	3		2.02 / 0.90		4	N				
			3	N	5	0.90		2.02 / ~~0.90~~	6	N	3			
WAS PINCH VALVE			15	N	7	0.56 / ---		---	8		15			SPARE BREAKER (G)
				N	9		0.56 / ---		10					
			3	N	11	---		0.56 / ---	12		3			
WELL PUMP	1	10	30	M	13	3.88 / ~~3.96~~		3.96	14	M	20			SPIRAGRIT PANEL
				M	15		3.88		16	M				
			3	M	17	3.96		3.88 / ~~3.96~~	18	M	3			
SERVICE WATER PUMPS *	1	12	20	N	19	2.55 / ~~0.43~~		0.43	20	N	15	12	3/4	EXHAUST FAN 3
				N	21		2.55 / 0.43		22	N				
			3	N	23	0.43		2.55 / ~~0.43~~	24	N	3			
WATER HEATER	3/4	10	30	C	25	6.00 / ~~6.69~~		6.69	26	N	15			CONDENSING UNIT 2 *
				C	27		6.00 / 6.69		28	N				
			3	C	29	6.69		6.00 / ~~6.69~~	30	N	3			
UNIT HEATER 1	3/4	12	15	C	31	2.07 / ~~7.42~~		7.42	32	C	40	8	1	FAN COIL UNIT 1
				C	33		2.07 / 7.42		34	C				
			3	C	35	7.42		2.07 / ~~7.42~~	36	C	3			
UNIT HEATER 2	3/4	12	15	C	37	2.07 / ~~2.13~~		2.13	38	N	15	12	3/4	HEAT PUMP 1
				C	39		2.07 / 2.13		40	N				
			3	C	41	2.13		2.07 / ~~2.13~~	42	N	3			

	A	B	C
TOTAL CONNECTED LOAD	40.25	40.25	40.25
*C=CONTINUOUS X 125% (NEC 215.2(A))	21.95	21.95	21.95
N=NON-CONTINUOUS (NEC 215.2(A))	18.73	18.73	18.73
M=LARGEST MOTOR X 125% (NEC 220.14)	4.95	4.95	4.95
TOTAL CALCULATED NEC LOAD	45.63	45.63	45.63

HIGH LEG LOAD:
45.63 KVA / 0.277 KV = 164.8 AMPERES

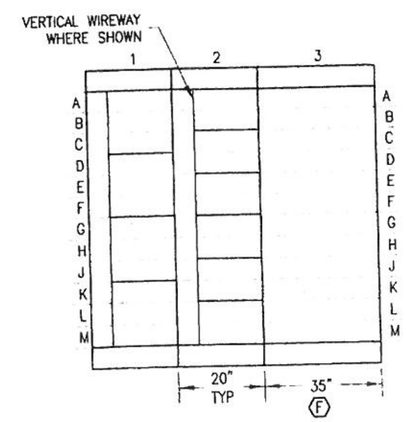

MCC 1 ELEVATION

N.T.S.

KEYNOTES

A. METALLIC UNDERGROUND WATER PIPING, CONCRETE SLAB REINFORCING STEEL, BUILDING STRUCTURAL STEEL, GROUND RING, AND ANY OTHER ELECTRODES PER NEC 250.50. SEE GROUND RING SPECIFICATION ON SHEET E105

B. 8' X 5/8" COPPERCLAD STEEL GROUND ROD AND WELL (TYPICAL).

C. SERVICE SURGE PROTECTOR, 480/277V, 3ø, 4W, 160,000A PER PHASE CAPACITY, STATUS LED, FUSED DISCONNECT SWITCH, UL1449 LISTED, LIEBERT SI016277YARSE, OR EQUAL, INSTALLED PER MANUFACTURER'S RECOMMENDATIONS.

D. PANEL "P2" SURGE PROTECTOR, 120/240V, 1ø, 3W, 80,000A PER PHASE CAPACITY, STATUS LED, UL1449 LISTED, LIEBERT ACV120S201R, INSTALLED PER MANUFACTURER'S RECOMMENDATIONS.

E. GENERATOR NEUTRAL SHALL BE BONDED TO THE GENERATOR FRAME. THE NEUTRAL SHALL NOT BE USED AS A CURRENT CARRYING CONDUCTOR IN THIS SYSTEM. EQUIPMENT GROUNDING CONDUCTOR RUN TO MAIN SWITCHBOARD VIA TRANSFER SWITCH SHALL BE BONDED TO GENERATOR FRAME.

F. MOUNT CONTROL DEVICES IN THE TOP HALF OF THE MCC SONTROL SECTION. LEAVE THE BOTTOM HALF OPEN FOR POSSIBLE FUTURE ADDITIONS.

G. SPARE CIRCUIT BREAKER FOR FUTURE SCREEN PANE 2.

SHORT CIRCUIT

THE AVAILABLE FAULT CURRENT AT THE UTILITY TRANSFORMER SECONDARY WILL NOT EXCEED 17,183 AMPERES, PER TELEPHONE CONVERSATION WITH ROGER PATNODE OF TRICO ON 6/5/06. MAXIMUM MOTOR CONTRIBUTION IS 4(TOTAL OF ALL MOTOR FULL LOAD CURRENTS=562.8A)=2,252A PER BUSS METHOD. TOTAL AVAILABLE FAULT IS 17,183A+2,252A= 19,435A. ALL EQUIPMENT OPERATING ON THE 480 VOLT SYSTEM SHALL BE RATED FOR A 42,000A FAULT CURRENT, MINIMUM.

THE AVAILABLE FAULT CURRENT AT THE 75KVA, 1ø TRANSFORMER SECONDARY WILL BE:

1)FAULT AT TRANSFORMER PRIMARY THRU 30 FEET OF 350MCM FEEDER (C=22,736 IN PVC):
f = [2x30'x17,183A(Isc at SES)]/(22,736x480V) = 0.0942
M = 1/1+f = 1/1+0.0942 = 0.914
Isc = 17,183A(Isc at SES) x 0.914 = 15,705A(Isc at XFMR)

2)FAULT AT TRANSFORMER SECONDARY (1.6% IMPEDANCE):
f = [15,705A(Isc at XFMR)x480Vx1.6%]/(100,000x75KVA) = 1.608
M = 1/1+f = 1/1+1.608 = 0.383
Isc = (480V/240V)x0.383x15,705A(Isc at XFMR primary) = 12,030A(Isc at XFMR secondary)

THEREFORE, PANEL "P2" SHALL BE RATED FOR A 12,030A FAULT CURRENT, MINIMUM.

LOAD SUMMARY

LOADS AT 480 VOLT, 3ø:

PREFABRICATED WASTEWATER TREATMENT PLANT "PANEL 1":

AERATION BLOWER 1 (25HP)	34.0A	
AERATION BLOWER 2 (25HP)	34.0A	
AERATION BLOWER 3 (25HP)	34.0A	
AERATION BLOWER 4 (25HP)	34.0A	
MOTIVE PUMP 1 (10HP)	14.0A	
MOTIVE PUMP 2 (10HP)	14.0A	
MOTIVE PUMP 3 (10HP)	14.0A	
MOTIVE PUMP 4 (10HP)	14.0A	
CLARIFIER RAKE DRIVE 1 (0.5HP)	1.1A	
RAS/WAS PUMP 1 (5HP)	7.6A	
RAS/WAS PUMP 2 (5HP)	7.6A	
PANEL 1 SUBTOTAL	208.3A	208.3A
25% LARGEST MOTOR (AERATION BLOWER, 25HP)	8.5A	
PANEL 1 FEEDER SIZE	216.8A	

PREFABRICATED WASTEWATER TREATMENT PLANT "PANEL 2":

AERATION BLOWER 5 (25HP)	34.0A	
AERATION BLOWER 6 (25HP)	34.0A	
AERATION BLOWER 7 (25HP)	34.0A	
MOTIVE PUMP 5 (10HP)	14.0A	
MOTIVE PUMP 6 (10HP)	14.0A	
MOTIVE PUMP 7 (10HP)	14.0A	
MOTIVE PUMP 8 (10HP)	14.0A	
CLARIFIER RAKE DRIVE 2 (0.5HP)	1.1A	
RAS/WAS PUMP 3 (5HP)	7.6A	
PANEL 2 SUBTOTAL	166.7A	166.7A
25% LARGEST MOTOR (AERATION BLOWER, 25HP)	8.5A	
PANEL 2 FEEDER SIZE	175.3A	

480 VOLT, 3ø PANEL "P1":
PANEL "P1" FEEDER SIZE (SEE PANEL SCHEDULE THIS SHEET) 164.8A 164.8A

480 VOLT, 1ø PANEL "P2" TRANSFORMER:
75kVA PANEL "P1" TRANSFORMER (SEE PANEL SCHEDULE SHEET E106) 156.3A 156.3A

MOTOR CONTROL CENTER 1 "MCC 1":

SLUDGE PUMP 1 (5HP)	7.6A	
SLUDGE HOLDING TANK BLOWER 1 (10HP)	14.0A	
SLUDGE HOLDING TANK BLOWER 2 (10HP)	14.0A	
TRANSFORMER (480-120/240V, 1ø, 37.5kVA)	78.1A	
EFFLUENT PUMP 1 (FUTURE - 30HP)	40.0A	
EFFLUENT PUMP 2 (FUTURE - 30HP)	40.0A	
EFFLUENT PUMP 3 (FUTURE - 30HP)	40.0A	
MOTOR CONTROL CENTER 1 SUBTOTAL	233.7A	233.7A
25% LARGEST MOTOR (EFFLUENT PUMP, 30HP)	10.0A	
MOTOR CONTROL CENTER 1 FEEDER SIZE	243.7A	

TOTAL PLANT LOAD	929.8A
25% LARGEST MOTOR (EFFLUENT PUMP, 30HP)	10.0A
MINIMUM PLANT FEEDER SIZE	939.8A
RESERVE CAPACITY	660.2A
PLANT FEEDER SIZE	1600.0A

PROVIDE A MINIMUM 1,600 AMPERE, 480/277 VOLT, 3ø, 4W SERVICE

AS BUILT
Bosquez Engineering, LLC
2500 N. Kimberlee Road, Tucson, Arizona 85749

RCE RICHARD CANNEY ENGINEERING
5741 E. PLACITA VARAS TUCSON, ARIZONA 85750
VOICE: (520) 615-8006
FAX: (520) 615-6495
canney@worldnet.att.net

eec Engineering and Environmental Consultants, Inc
4625 E. FT. LOWELL RD. TUCSON, ARIZONA 85712 520 321-4626

NO.	REVISION	APP'D.	DATE
1	MISC. MODIFICATIONS/ADD LOUNGE		8/10/06
2	INCREASE SERVISE TO 1,600 AMPERES		8/24/06
3	8/23/06 DEVELOPMENT SERVICES COMMENTS		9/19/06
4	2/16/07 REVISE SERVICE WATER PUMP STATION		2/16/07
5	AS BUILT REVISIONS		08/07

Registered Professional Engineer, Certificate No. 20119, PETER A. LIVINGSTON, ARIZONA

PIMA COUNTY WASTEWATER MANAGEMENT DEPARTMENT
201 North Stone Avenue * Tucson, Arizona 85701-1207 * Phone: (520) 740-6500

CORONA DE TUCSON
WASTEWATER TREATMENT FACILITY
ELECTRICAL SINGLE LINE DIAGRAM
AS-BUILT

PROJECT NO.: 204085
DATE: 9/2007
SCALE HORIZ.: N/A
VERT.: N/A
SHEET NO.: E10 OF 12