NOTE:
THE ZEROS IN PARENTHESES (0, 0.0 & 0.000) INDICATE THE DIMENSIONAL PRECISION FOR THAT COLUMN

NOTE:
PIPE OPTIONS SELECTED ARE THOSE REQUIRED TO MEET MINIMUM SERVICE LIFE.
SHADED PIPE OPTION FIELDS ARE NOT ALLOWABLE ALTERNATIVES.

CSP - CORRUGATED STEEL PIPE
CAP - CORRUGATED ALUMINUM PIPE
RCP - REINFORCED CONCRETE PIPE
NRCP - NON-REINFORCED CONCRETE PIPE
NRCIPCP - NON-REINFORCED CAST-IN-PLACE CONCRETE PIPE
CHDPEPP - CORRUGATED HIGH-DENSITY POLYETHYLENE PLASTIC PIPE

F.H.W.A. REGION	STATE	PROJECT NO.	SHEET NO.	TOTAL SHEETS	AS BUILT
9	ARIZ.	STP-PPM-0(209)D	20	273	
		SS693 01C			

Station (MAGEE RD ℄)	Plan Reference Number	◒ Controlling Fill Height Range	Size, Corrugated (In.)	Size, Smooth (In.)	Length (0) (Ft.)	Skew (0) (Degree)	◪ Corrugation	Wall Thickness (0.000)	CSP Zinc Coating (In.)	CSP Bituminous Coated Zinc Coating (In.)	CAP Aluminum Coating (In.)	CAP Bituminous Coated Aluminum Coating (In.)	◪ Corrugation	Wall Thickness (0.000)	RCP Uncoated (In.)	RCP Bituminous Coated (In.)	NRCP Class - Non-Trench (In.)	NRCIPCP Class - Trench (In.)	CHDPEPP Minimum Wall Thickness (0)	AASHTO M-294 Type C	AASHTO M-294 Type S	C-13.20 & C-13.25	End Section Detail	Size, (In) Manhole	Standard or Detail	S-Single / D-Double	Location	H (0.0)	L Wing (0.0)	L 18" Slotted Drain (0)	L 24" Slotted Drain (0)	Grate Type	Control Point Elevation (0.00)	Catch Basin Depth (Ft.)	Apron Depression D008 L (0.0) (In.)	Pipe Excavation (0) (Ft.)	Pipe Back-fill (0) C-13.15 (Ft.)	Drainage Excavation (0) (Cubic Yard)	Berm/Dike Embankment (0) (Cubic Yard)	REMARKS
446+12 to 446+12	28	2		18	33													II							308		43' RT	2.7					2516.55			2	6			CB23 to MH5
447+19 to 446+12	29	2		18	103													II					48		300		9' RT	4.4					2519.48			7	20			MH6 to MH5
447+19 to 447+19	30	2		18	51													II							308		43' LT	2.7	8				2518.36	2.5	12	3	10			CB24 to MH6
450+50 to 447+19	31	2		18	328													II					48		300		9' RT	4.2					2525.57			149	64			MH7 to MH6
450+86 to 450+50	32	2		18	62													II							308		43' LT	2.7	8				2525.17	2.5	12	40	12			CB26 to MH7
450+50 to 450+50	33	2		18	33													II							308		43' RT	2.7	16				2524.43	2.5	20	22	6			CB25 to MH7
455+35 to 450+50	34	2		18	481													II					48		300		9' RT	4.5					2536.60			330	93			MH8 to MH7
455+58 to 455+35	35	2		18	56													II							308		43' LT	2.7	16				2535.83	2.5	20	28	11			CB28 to MH8
455+35 to 455+35	36	2		18	33													II							308		43' RT	2.7	16				2535.30	2.5	20	19	6			CB27 to MH8
459+45 to 459+45	37	2		18	87													II							308		43' LT	2.5	12				2545.00	2.5	16	23	17			CB29 to CB30
459+45 to 459+45	38	2		18	16													II							308		43' RT	3.1	12				2545.0	2.5	16	2	3			CB30 to WINGWALL
462+91 to 459+87	39	2		18	298													II							308		43' RT	3.3	12				2552.41	2.5	16	50	58			CB31 to RCP2
463+29 to 462+91	40	2		18	95													II							308		43' LT	2.7	12				2553.14	2.5	16	11	18			CB32 to CB31
468+75 to 468+54	41	2		18	101													II							308		55' LT	2.7	8				2563.36	2.5	12	56	20			CB34 to CB33
471+05 to 468+54	42	2		36	206													II							DD07		54.9'RT				DD07					211	69			TD1 to CB33
471+28 to 471+17	43	2		18	18													II									77.5'RT	2.7					2568.06			7	4			TD3 to BC3
471+44 to 471+05	44	2		36	16													II							DD05		57.2'RT	4.2	12				2568.84	2.5	16	21	5			CB35 to TD1
473+12 to 471+44	45	3		36	126													II							DD07		60' RT									105	42			TD2 to CB35
473+25 to 473+12	46	3		24	16													III					48		300		81.5'RT	3.2			DD07		2572.30			9	3			MH9 to TD2
473+27 to 473+25	47	3		18	3													III							DD07		85.8'RT	3.2								1	1			HW to MH9
473+50 to 473+12	48	2		18	17													II							DD05		61' RT	3.7	16				2572.86	2.5	20	11	3			CB36 to TD2
476+85 to 473+50	49	2		18	316													II							DD05		61' RT	3.4	16				2583.79	2.5	20	119	61			CB39 to CB36
475+05 to 475+05	50	1	18		25		A	0.063	X																		75' LT	2.7					2576.98			10	5			SD2 to BC3
475+80 to 475+80	51	1	18		26		A	0.063	X																		74.8'LT	2.7					2579.19			9	5			SD3 to BC3
476+42 to 476+42	52	3		18	25													II							309	S	78 'LT	2.7			311		2580.00			10	5			CB37 to BC3
476+78 to 476+78	53	2		18	28													II							309	S	84' LT	2.7			311		2582.00			14	5			CB38 to BC3
477+74 to 476+85	54	2		18	75													II			1						83' RT	2.0								11	15			End Sectn to CB39
Sheet Total																					1															1280	567			

FILL HEIGHT RANGE TABLE (Ft.)

RANGE NO.		1	2	3	4	5	6	7	8	9	10	11	12
FILL	>	1	3	5	8	11	15	20	25	30	40	55	70
HEIGHT (Ft.)	≤	3	5	8	11	15	20	25	30	40	55	70	90

◒ SHOULD FIELD CONDITIONS VARY FROM THE RANGE INDICATED, CONTACT DESIGN FOR RE-EVALUATION OF PIPE DESIGN REQUIREMENTS.

◪ PIPE CORRUGATION			
A	2⅔x½	D	6x2
B	3x1	E	3x1 or 9x2½
C	9x2½		

NEW PIPE SUMMARY SHEET

FILE NAME: s:\10-077 magee road\civil\cadd\ds\4MRLCO_DS07.dgn DATE: 12/27/12 TIME: 5:11:37 PM aherrera

Priscilla S. Cornelio, P.E., Director

No.	Revision Description	Engineer	Date

		Date
Designed	MDC/JDB/BGN	12/12
Drawn	MDC/JDB/BGN	12/12
Checked	JDS	12/12
Proj. Engr.	AJH	12/12

CIVIL ANTHONY J. HERRERA ARIZONA U.S.A. Date Signed 12/27/12 Expires 12/31/13

epsgroup, Inc.
Engineers, Planners & Surveyors
Phone: (520) 628-1450 Fax: (520) 628-1462

Arizona Blue Stake 1-800-STAKE-IT 1-800-782-5348

Pima County Department of Transportation

DRAINAGE SUMMARY SHEET
MAGEE RD.
LA CAÑADA DR. - ORACLE RD. (SR 77)
PROJECT NO. 4MRLCO

MAGEE RD. IMPROVEMENTS - LA CAÑADA DR. TO ORACLE RD. (SR 77) - PROJECT NO. 4MRLCO

Scale: N.T.S. | Sheet DS07 of DS08 | Page 20 of 273

NOTE:
THE ZEROS IN PARENTHESES (0, 0.0 & 0.000) INDICATE THE DIMENSIONAL PRECISION FOR THAT COLUMN

NOTE:
PIPE OPTIONS SELECTED ARE THOSE REQUIRED TO MEET MINIMUM SERVICE LIFE.
SHADED PIPE OPTION FIELDS ARE NOT ALLOWABLE ALTERNATIVES.

CSP - CORRUGATED STEEL PIPE
CAP - CORRUGATED ALUMINUM PIPE
RCP - REINFORCED CONCRETE PIPE
NRCP - NON-REINFORCED CONCRETE PIPE
NRCIPCP - NON-REINFORCED CAST-IN-PLACE CONCRETE PIPE
CHDPEPP - CORRUGATED HIGH-DENSITY POLYETHYLENE PLASTIC PIPE

F.H.W.A. REGION	STATE	PROJECT NO.	SHEET NO.	TOTAL SHEETS	AS BUILT
9	ARIZ.	STP-PPM-0(209)D	21	273	
		SS693 01C			

Station (MAGEE RD ℄)	Plan Reference Number	◒ Controlling Fill Height Range	Size, Corrugated (In.)	Size, Smooth (In.)	Length (0) (Ft.)	Skew (0) (Degree)	◪ Corrugation (In.)	Wall Thickness (0.000) (In.)	Zinc Coating	Bituminous Coated Zinc Coating	Aluminum Coating	Bituminous Coated Aluminum Coating	◪ Corrugation (In.)	Wall Thickness (0.000) (In.)	Uncoated	Bituminous Coated	Class - Non-Trench	Class - Trench	Class	Minimum Wall Thickness (0) (In.)	AASHTO M-294 Type C	AASHTO M-294 Type S	C-13.20 & C-13.25	Detail	Size, (In) Manhole	Standard or Detail	End Section Each	S-Single / D-Double	Catch Basin, Manhole, Headwall & Junction Structure Location	H (0.0) (Ft.)	L Wing (0.0) (Ft.)	L 18" Slotted Drain (0) (Ft.)	L 24" Slotted Drain (0) (Ft.)	Grate Type	Control Point Elevation (0.00) (Ft.)	Depth (Ft.)	L (0.0) (Ft.)	Apron Depression C-15.10 (In.)	Pipe Excavation (0) (Ft.)	Pipe Backfill (0) C-13.15 (Ft.)	Drainage Excavation (0) (Ft.)	Berm/Dike Embankment (0) (Ft.)	REMARKS
480+31 to 480+39	55	3		18	6														III						308				49' RT	2.7	24				2593.00	2.5	28	2	1			CB40 to BC6
480+78 to 480+78	56	3		18	3														III						308				61' LT	4.3	24				2594.09	2.5	28	3	1			CB41 to BC5
481+58 to 481+58	57	3		18	31														III						309	S			92' RT	2.5				311	2593.54			19	6			CB42 to BC6
482+04 to 482+04	58	2		18	8														II						309	S			71.7'RT	2.5				311	2594.50			5	2			CB43 to BC6
482+10 to 482+10	59	3		18	6														III						308				49' RT	5.1	16				2597.36	2.5	20	4	1			CB44 to BC6
483+74 to 483+09	60	2		18	62														II						309	D			59' RT	2.8				311	2601.95			29	12			CB45 to JS3
484+85 to 484+86	61	2		18	24														II				1		308				32' RT	2.9	8				2606.03	2.5	12	6	5			CB46 to CHANNEL
486+65 to 486+65	62	2		18	18														II				1		308				24' RT	2.7	16				2612.07	2.5	20	5	3			CB47 to CHANNEL
487+13 to 486+86	63	2		18	28														II						308				28' LT	2.7	16				2613.58	2.5	20	12	5			CB48 to EXIST. MH
98+56 to 98+56*	64	2		18	6														II						309	D			31' RT	2.7				311	2561.22			3	1			CB50 to BC4
96+96 to 96+69*	65	2		18	5														II						309	D			26' LT	2.7				311	2559.42			3	1			CB49 to BC4
102+49 to 102+62*	66	2		18	17														II						308				42' LT	2.7	8				2560.45	2.5	12	2	3			CB51 to BC3
102+49 to 102+41*	67	2		18	11														II						308				18' RT	2.7	8				2560.93	2.5	12	3	2			CB52 to BC3
105+26*	68	1	18		15		A	0.063	X																				48' LT									4	3			CULVERT EXTENSION
480+14 to 480+14	69	2		18	55														III						309	D			116' LT	2.9				311	2592.90			36	11			CB53 to EXIS. CBC
473+98 to 473+98	70	1	18		13		A	0.063	X																														3	3			SD1 TO BC3
478+42	71	3	42		21		A	0.063	X																DD02				44' LT									2	8			PIPE COLLAR
478+54	72	3	42		21		A	0.063	X																DD02				44' LT									2	8			PIPE COLLAR
436+64.74	RCP1	1		42	482	56° Rt													II						B-11.11				68' RT									209	178			CROSS CULVERT
460+58.05	RCP2	1		24	741	59° Rt													III						B-11.11				62' RT									195	127			CROSS CULVERT
Sheet Total																							2															547	381			
Project Total																							5															3116	1554			

FILL HEIGHT RANGE TABLE (Ft.)													
RANGE NO.		1	2	3	4	5	6	7	8	9	10	11	12
FILL	>	1	3	5	8	11	15	20	25	30	40	55	70
HEIGHT (Ft.)	≤	3	5	8	11	15	20	25	30	40	55	70	90

◒ SHOULD FIELD CONDITIONS VARY FROM THE RANGE INDICATED, CONTACT DESIGN FOR RE-EVALUATION OF PIPE DESIGN REQUIREMENTS.

◪ PIPE CORRUGATION			
A	2⅔x½	D	6x2
B	3x1	E	3x1 or 9x2½
C	9x2½		

* - NORTHERN AVE. ℄

NEW PIPE SUMMARY SHEET

FILE NAME: s:\10-077 magee road\civil\cadd\ds\4MRLCO_DS08.dgn DATE: 12/27/12 TIME: 5:11:40 PM aherrera

Scale: N.T.S. Sheet DS08 of DS08

Pima County Department of Transportation

DRAINAGE SUMMARY SHEET
MAGEE RD.
LA CAÑADA DR. - ORACLE RD. (SR 77)
PROJECT NO. 4MRLCO

epsgroup, Inc.
Engineers, Planners & Surveyors
2110 N. Thornydale Rd., Ste. 140, Tucson, Arizona 85742
Phone: (520) 744-9500 Fax: (520) 744-9515

Arizona Blue Stake
1-800-STAKE-IT
(or the Working Days Before You Dig)

Priscilla S. Cornelio, P.E., Director

No.	Revision Description	Engineer	Date

		Date
Designed	MDC/JDB/RGN	12/12
Drawn	MDC/JDB/RGN	12/12
Checked	JDS	12/12
Proj. Engr.	AJH	12/12

MAGEE RD. IMPROVEMENTS - LA CAÑADA DR. TO ORACLE RD. (SR 77) - PROJECT NO. 4MRLCO

F.H.W.A. REGION	STATE	PROJECT NO.	SHEET NO.	TOTAL SHEETS	AS BUILT
9	ARIZ.	STP-PPM-0(209)D	22	273	

SS693 01C

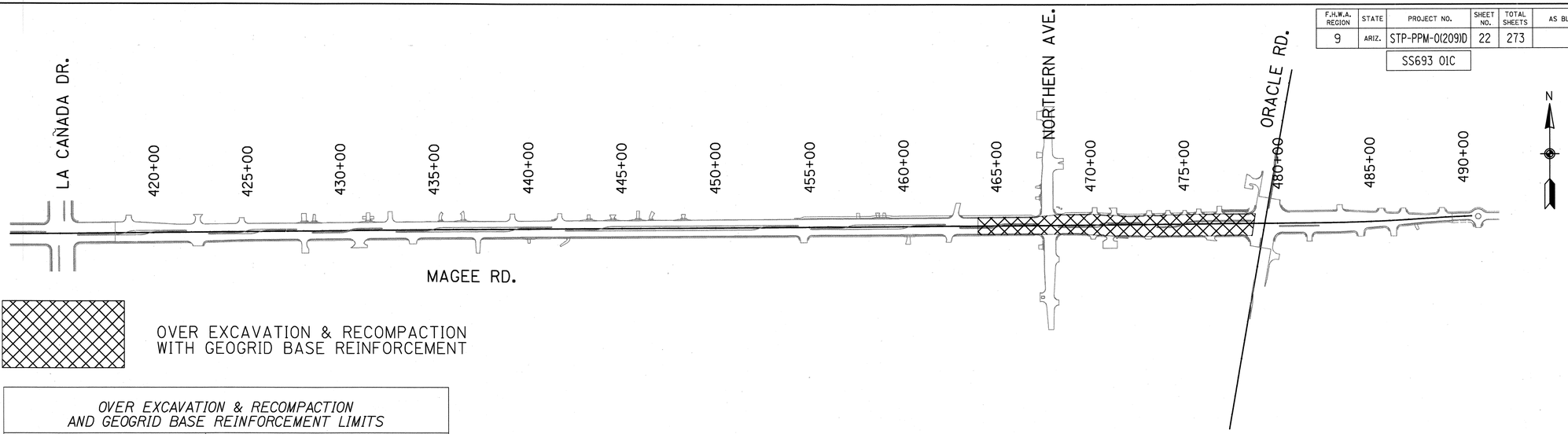

OVER EXCAVATION & RECOMPACTION WITH GEOGRID BASE REINFORCEMENT

OVER EXCAVATION & RECOMPACTION AND GEOGRID BASE REINFORCEMENT LIMITS	
Magee Rd. Station	Limits
464+00.00 to 478+74.00	3' From Back of Curb Lt. & Rt.

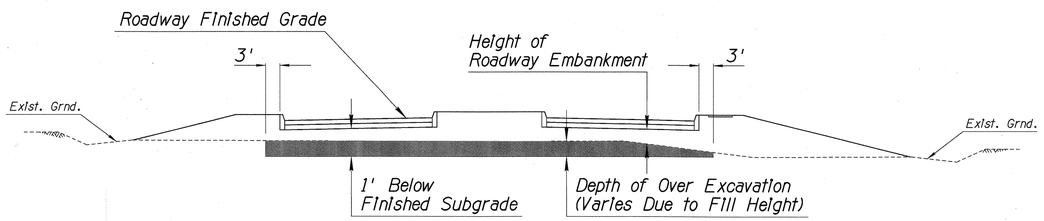

OVER EXCAVATION & RECOMPACTION
TYPICAL EMBANKMENT SECTION

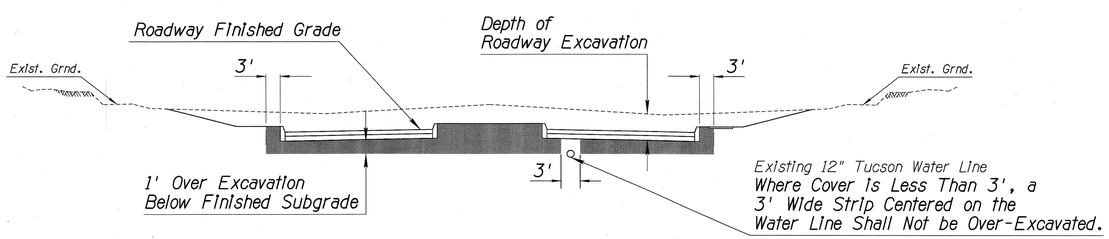

OVER EXCAVATION & RECOMPACTION
TYPICAL EXCAVATION SECTION

NOTES:

(1) Roadway Embankment heights greater than 1' above existing grade do not require Over Excavation & Recompaction/Replacement.

(2) Total Roadway Embankment height plus Over Excavation depth shall be 1', minimum.

(3) The soil within the Over Excavation zone shall be removed and recompacted or replaced. Recompaction of the soil within the limits of the Over Excavation zone shall be performed to achieve at least 95% of the maximum dry density and within ±2% of the optimum moisture content as determined in accordance with Arizona Test Method 225 (Standard Proctor). The Recompaction shall also comply with Section 203 and 205 of the standard specifications.

(4) See Cross Sections for depths of Over Excavation.

(5) All Excavation Shown in this Detail Shall be Paid Under Bid Item No. 2030500, Excavation, Unless Otherwise Noted.

(6) All Work for Geogrid Base Reinforcement Shall be Paid Under Bid Item No. 3060002, Geogrid Base Reinforcement.

(7) Geogrid Shall be Placed on Top of Finished Subgrade Prior to Placement of Aggregate Base Per Section 306 of the PC/COT Standard Specifications.

(8) See Section 1014-3 of the PC/COT Standard Specifications for Geogrid Materials Properties.

(9) All Work for Separation Geotextile Fabric Shall be Paid Under Bid Item No. 2080001, Separation Geotextile Fabric.

(10) Separation Geotextile Fabric Shall be Placed Below Geogrid Per Section 208 of the PC/COT Standard Specifications.

(11) See Section 1014-4 of the PC/COT Standard Specifications for Separation Geotextile Fabric.

DETAIL RD01

Pavement Subgrade
Over Excavation & Recompaction/Replacement

Scale:	N.T.S.	Sheet RD01 of RD13	Page 22 of 273

Priscilla S. Cornelio, P.E., Director

Designed	MDC/JDB/BGN	12/12
Drawn	MDC/JDB/BGN	12/12
Checked	JDS	12/12
Proj. Engr.	AJH	12/12

No.	Revision Description	Engineer	Date

Arizona Blue Stake
1-800-STAKE-IT
1-800-782-5348
Or the Owning Utilities Listed Thereon

eps group, inc.
Engineers, Planners & Surveyors
8710 N. Thornydale Rd. Ste. 140, Tucson, Arizona 85742
Phone (520) 485-1400 Fax (520) 485-1403

Pima County Department of Transportation

ROADWAY DETAILS
PAVEMENT SUBGRADE
OVER EXCAVATION & RECOMPACTION
MAGEE RD.
LA CAÑADA DR. - ORACLE RD. (SR 77)
PROJECT NO. 4MRLCO

MAGEE RD. IMPROVEMENTS - LA CAÑADA DR. TO ORACLE RD. (SR 77) - PROJECT NO. 4MRLCO

FILE NAME: S:\10-077 Magee Road\Civil\CADD\RD\RD01.dgn DATE: 12/27/12 TIME: 5:13:17 PM aherrera

F.H.W.A. REGION	STATE	PROJECT NO.	SHEET NO.	TOTAL SHEETS	AS BUILT
9	ARIZ.	STP-PPM-0(209)D	23	273	
		SS693 01C			

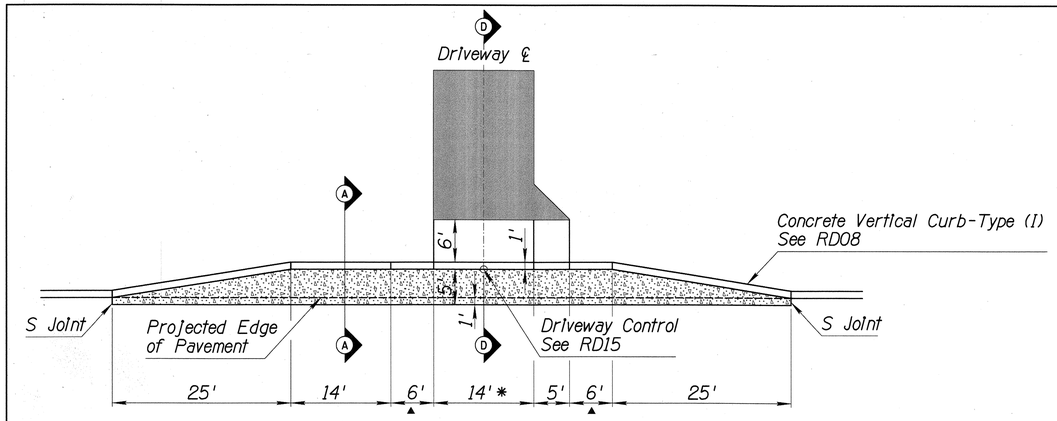

CURB ONLY SINGLE DRIVEWAY TURNOUT

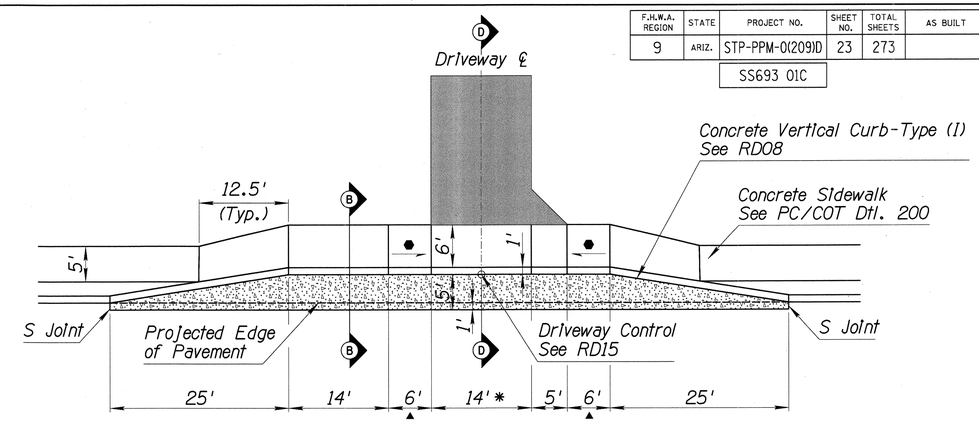

SINGLE DRIVEWAY TURNOUT
WITH SIDEWALK

- ● Transition to Driveway Grade at 12:1 Max.
- ▲ Slope to Meet Depressed Curb.
- ✱ 14' Unless Noted on Plans. See Sheets DW01-DW30.

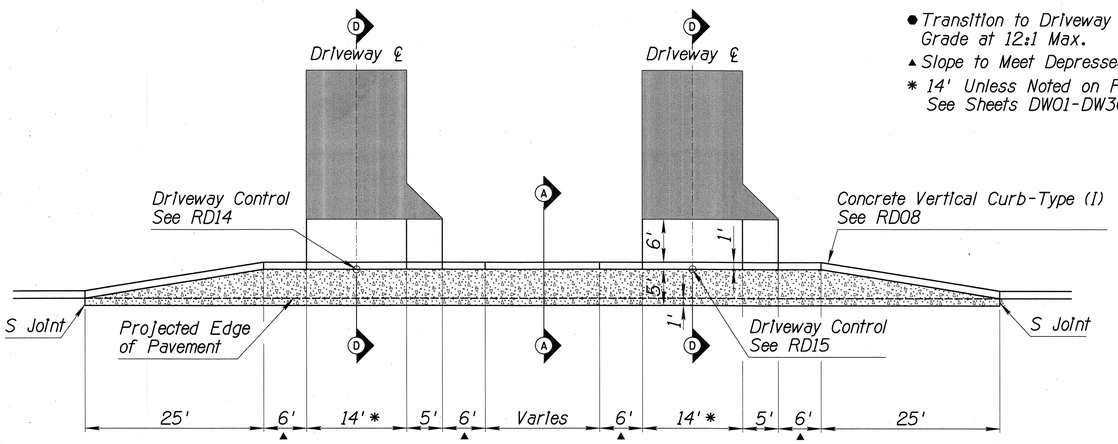

CURB ONLY DOUBLE DRIVEWAY TURNOUT

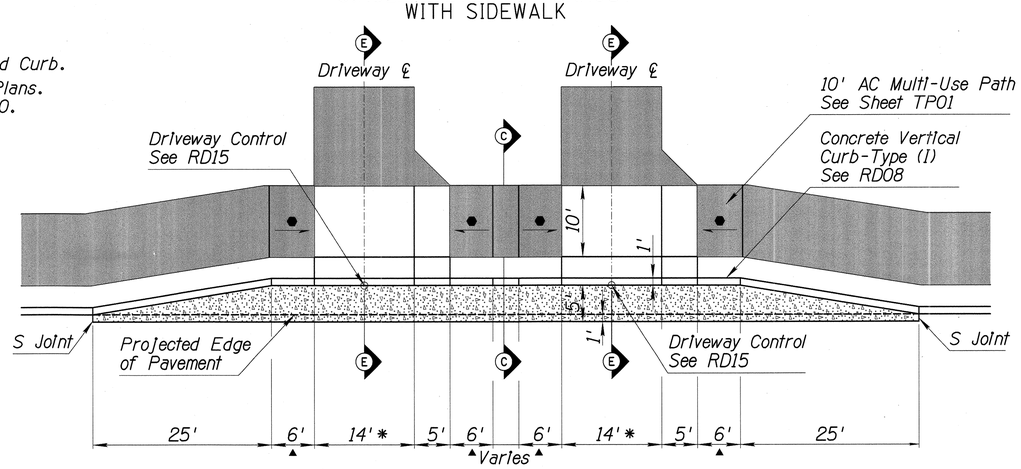

DOUBLE DRIVEWAY TURNOUT
WITH MULTI-USE PATH

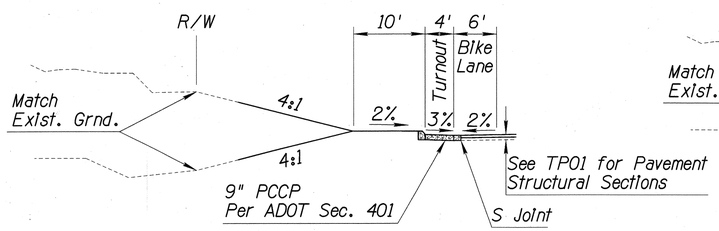

(A) CURB ONLY DRIVEWAY TURNOUT

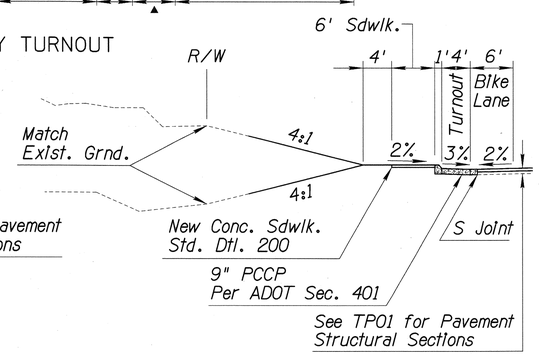

(B) DRIVEWAY TURNOUT WITH SIDEWALK

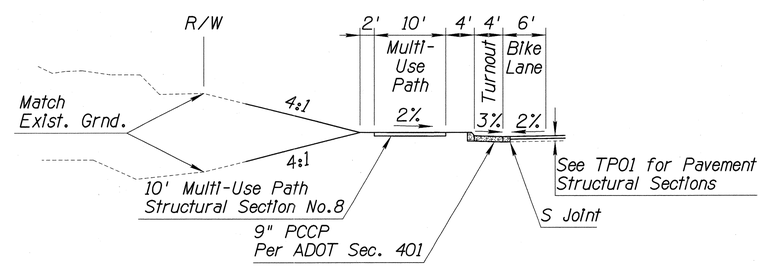

(C) DRIVEWAY TURNOUT WITH MULTI-USE PATH

NOTES:

1. See Paving Plans for additional grading information. The actual paving pour plan with joint locations shall be based upon the project paving plan submitted by the contractor and approved by the Engineer in accordance with section 401 of the 2008 ADOT Standard Specifications.
2. See ADOT Std. C-7.01 for joint types. No load transfer dowels required.
3. Transverse weakened-plane joints shall be constructed at a maximum spacing of 12' and shall align with joints in the concrete curb.
4. PCCP shall be paid under Bid Item No. 4010001 Portland Cement Concrete Pavement.

DETAIL RD02

Driveway Turnouts Page 1 of 2

Scale:	N.T.S.	Sheet RD02 of RD13

Priscilla S. Cornelio, P.E., Director

		Date
Designed	MDC/JDB/BGN	12/12
Drawn	MDC/JDB/BGN	12/12
Checked	JDS	12/12
Proj. Engr.	AJH	12/12

No.	Revision Description	Engineer	Date

CHRISTOPHER J. CARNEY (Civil) Reg. No. 29819 ANTHONY J. HERRERA Date Signed 12/27/12 ARIZONA, U.S.A. Expires 6/30/13

eps group, inc. Engineers, Planners & Surveyors 8710 N. Thornydale Rd., Ste. 140, Tucson, Arizona 85742 Phone (520) 744-9566 Fax (520) 744-9569

Arizona Blue Stake 1-800-STAKE-IT 1-800-782-5348 Dial one working day before you dig

Pima County Department of Transportation

ROADWAY DETAILS
DRIVEWAY TURNOUTS
MAGEE RD.
LA CAÑADA DR. - ORACLE RD. (SR 77)
PROJECT NO. 4MRLCO

MAGEE RD. IMPROVEMENTS - LA CAÑADA DR. TO ORACLE RD. (SR 77) - PROJECT NO. 4MRLCO

FILE NAME: S:\10-077 Magee Road\Civil\CADD\RD\RD02.dgn DATE: 12/27/12 TIME: 5:14:18 PM aherrera

F.H.W.A. REGION	STATE	PROJECT NO.	SHEET NO.	TOTAL SHEETS	AS BUILT
9	ARIZ.	STP-PPM-0(209)D	24	273	
		SS693 01C			

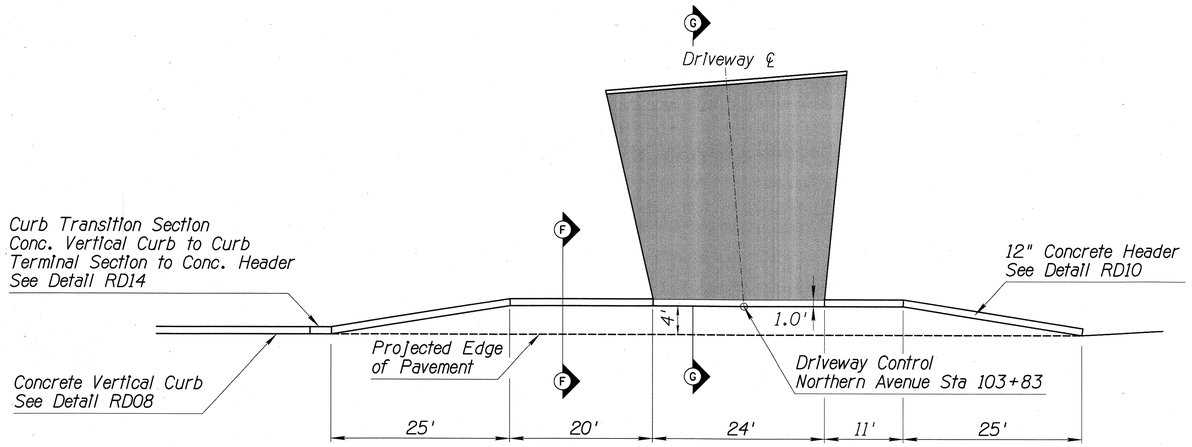

DEPRESSED CURB DRIVEWAY TURNOUT
NORTHERN AVENUE STA 103+83

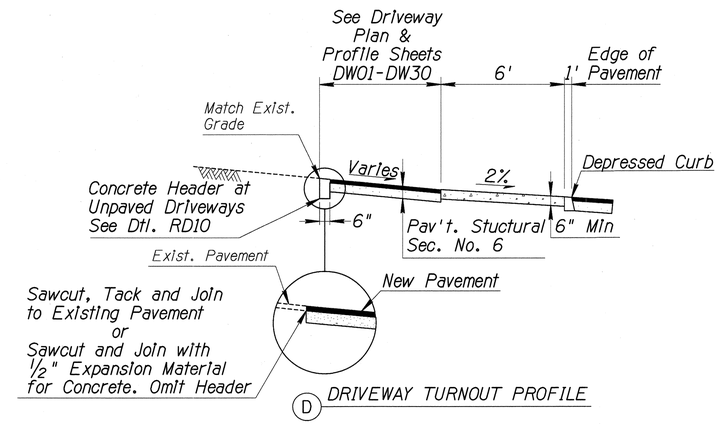

D DRIVEWAY TURNOUT PROFILE

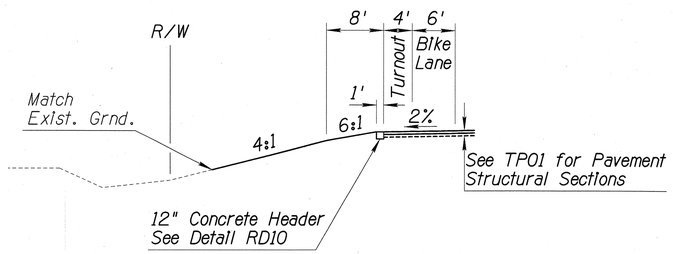

F DEPRESSED CURB DRIVEWAY TURNOUT

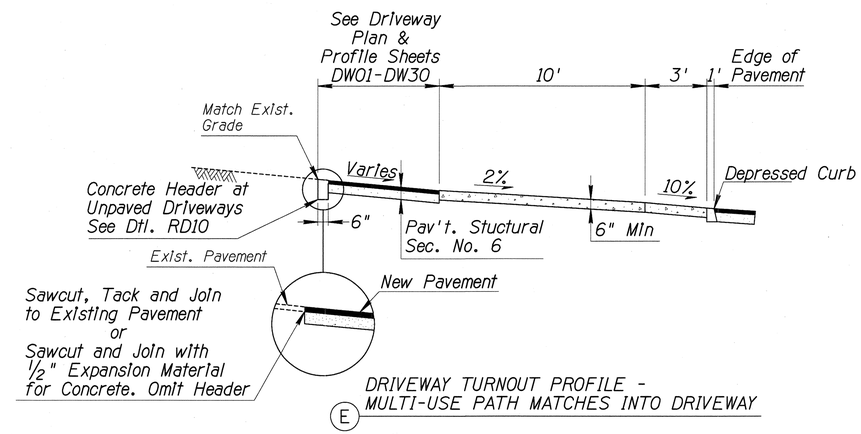

E DRIVEWAY TURNOUT PROFILE -
MULTI-USE PATH MATCHES INTO DRIVEWAY

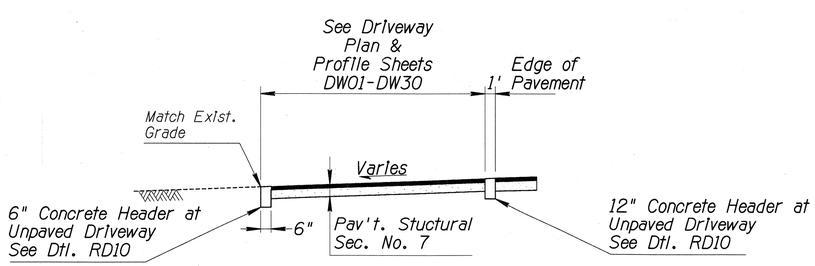

G DRIVEWAY TURNOUT PROFILE -
CONCRETE HEADER AND NO DRIVEWAY APRON

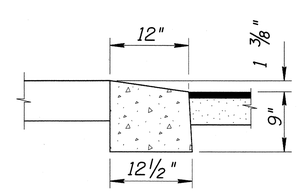

DEPRESSED CURB DETAIL

DETAIL RD02

Driveway Turnouts
Page 2 of 2

Priscilla S. Cornelio, P.E., Director

No.	Revision Description	Engineer	Date

		Date
Designed	MDC/JDB/BGN	12/12
Drawn	MDC/JDB/BGN	12/12
Checked	JDS	12/12
Proj. Engr.	AJH	12/12

Registered Professional Engineer (Civil) CERTIFICATE NO. 40219 ANTHONY J. HERRERA Date Signed 12/27/12 ARIZONA, U.S.A. Expires 12/31/15

eps group, Inc.
Engineers, Planners & Surveyors
8710 N. Thornydale Rd., Ste. 140, Tucson, Arizona 85742
Phone (520) 408-1400 Fax (520) 408-1403

Arizona Blue Stake
1-800-STAKE-IT
1-800-782-5348
Call two Working Days before You Dig

Pima County Department of Transportation

ROADWAY DETAILS
DRIVEWAY TURNOUTS
MAGEE RD.
LA CAÑADA DR. - ORACLE RD. (SR 77)
PROJECT NO. 4MRLCO

MAGEE RD. IMPROVEMENTS - LA CAÑADA DR. TO ORACLE RD. (SR 77) - PROJECT NO. 4MRLCO

Scale:	N.T.S.	Sheet RD03 of RD13	Page 24 of 273

FILE NAME: s:\10-077 magee road\civil\cadd\rd\RD03.dgn DATE: 12/27/12 TIME: 5:14:47 PM aherrera

F.H.W.A. REGION	STATE	PROJECT NO.	SHEET NO.	TOTAL SHEETS	AS BUILT
9	ARIZ.	STP-PPM-0(209)D	25	273	

SS693 01C

1. Access Ramp Control Point See Table this Sheet for Location
2. Detectable Warning 6' X 2' (Typ.) See Detail RD16
3. Rough Broom Finish Use (Typ.)
4. See Plans for Radius
5. Blended Transition (Typ.)
6. Mid-Point of Curb Return

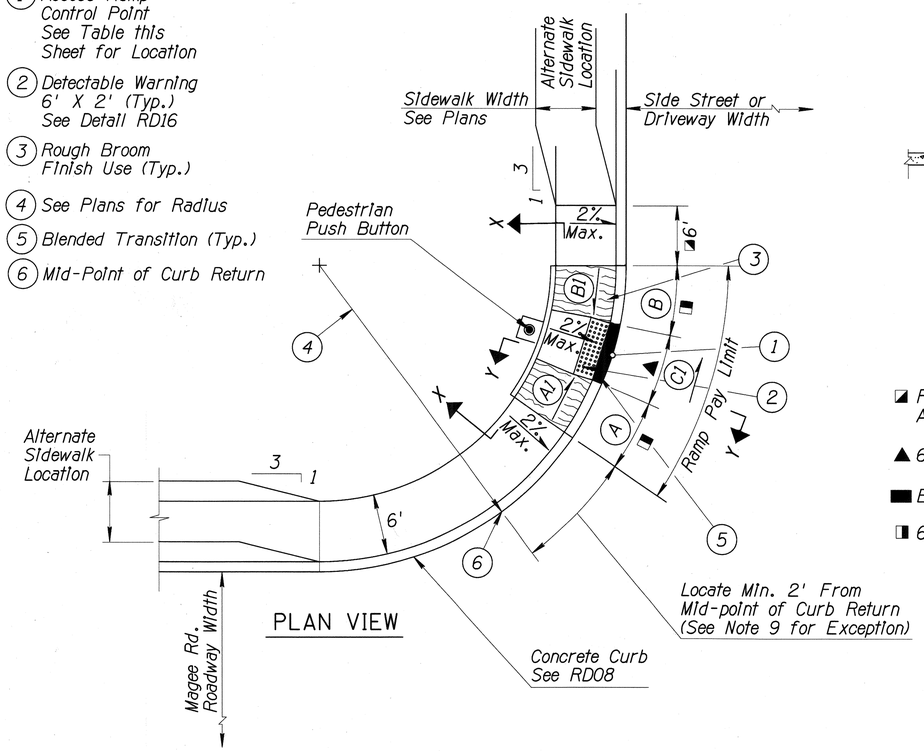

PLAN VIEW

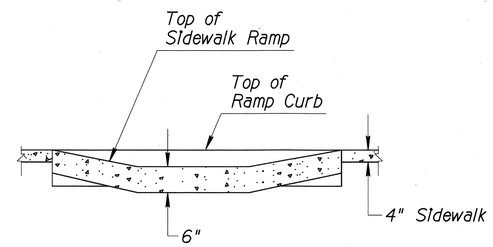

SECTION X-X

◪ Provide Minimum of 6' of Sidewalk Along Curbline (Typ.)

▲ 6' Wide at Back of Curb

▬ Blended Transition

◨ 6' Minimum, 15' Maximum

Single Curb Access Ramp					
Control Point (1)	(A)	(A1)	(B)	(B1)	(C1)
Location Sta. & Offset	Length (FT.)	Slope (%)	Length (FT.)	Slope (%)	Slope (%)
Magee Rd. 422+61.70, 64.07' Rt.	9	8.3	6	4.5	3.8
Magee Rd. 441+39.76, 44.42' Lt.	6	6.1	8	8.3	-2.2
Magee Rd. 454+89.70, 59.08' Rt.	7	8.3	6	6.5	1.8
Magee Rd. 481+56.12, 65.14' Rt.	8	8.3	6	5.8	2.5
Magee Rd. 481+84.22, 65.43' Rt.	10	8.3	6	2.7	5.6
Magee Rd. 484+28.07, 65.50' Rt.	6	6.6	7	8.3	-1.7
Magee Rd. 485+41.92, 60.03' Lt.	6	6.2	8	8.3	-2.1
Magee Rd. 485+70.73, 59.00' Lt.	8	8.3	6	5.9	2.4
Magee Rd. 485+95.88, 45.45' Rt.	6	8.3	6	8.0	0.4
Magee Rd. 486+34.63, 41.12' Rt.	8	8.3	6	5.0	3.3
Magee Rd. 486+61.07, 50.24' Lt.	6	5.6	8	8.3	-2.7
Magee Rd. 486+89.72, 45.39' Lt.	7	8.3	6	6.6	1.7
Magee Rd. 488+65.48, 34.16' Lt.	6	7.9	6	8.3	-0.4
Magee Rd. 488+98.78, 33.42' Lt.	10	8.3	6	3.4	5.0

* Pedestrian Push Button and Pole Shall Be Placed Only When Applicable and Approved by PCDOT Engineering

NOTES:

1. Pedestrian Push Button Pole or Traffic Signal Pole. See Traffic Signal Plans for Additional Information.
2. See Std. Dtl. 200 for Joint Requirements.
3. Ramp Joints Along Returns Shall be Radial from the Back of Curb or Back of Detectable Warning Strip.
4. Drainage Inlets are Not Permitted within Crosswalks or Within 10' of an Access Ramp.
5. Type 1 Single Curb Access Ramp Shall be Paid for Under Bid Item No. 9080280, Curb Access Ramp, PC/COT Std. Dtl. 207 (Type 1).
6. See Table This Sheet for Ramp Location. Curb Access Ramp Should be Oriented to Align with the Crosswalk or Stop Line, Median Refuge Area, and with the Opposite Access Ramp in the Direction of Pedestrian Travel.
7. Lengths Along Edge of Pavement.
8. Refer to the Staking Sheets for Additional Grading.
9. Curb Access Ramp Location is Not Restricted within Curb Radii on Local Streets and Residential Collectors with a Maximum 2,500 Vehicles Per Day and which is Not Adjacent to a Major Arterial.

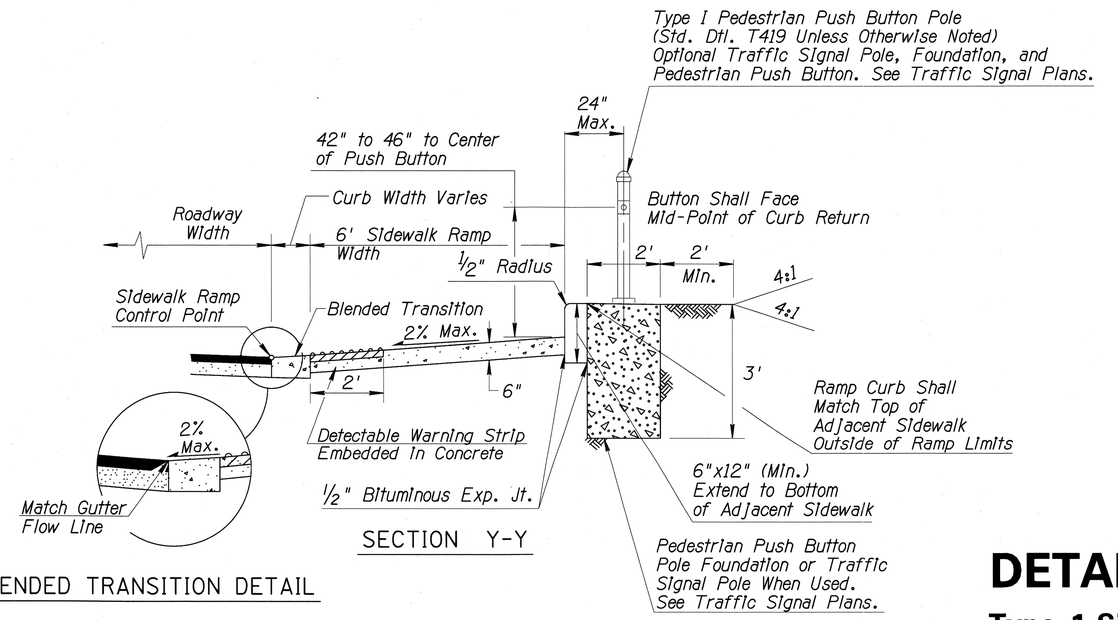

SECTION Y-Y

BLENDED TRANSITION DETAIL

DETAIL RD03

Type 1 Single Curb Access Ramp

Scale:	N.T.S.	Sheet RD04 of RD13

Priscilla S. Cornelio, P.E., Director

No.	Revision Description	Engineer	Date

		Date
Designed	MBK/MBS/BGN	12/12
Drawn	MDC/JDB/BGN	12/12
Checked	JDS	12/12
Proj. Engr.	AJH	12/12

Registered Professional Engineer (Civil) CERTIFICATE NO. 40219 ANDREW J. HERRERA Date Signed 12/12/12 ARIZONA U.S.A. Expires 6/30/13

epsgroup, inc. Engineers, Planners & Surveyors 2110 N. Thornydale Rd., Ste. 140, Tucson, Arizona 85742 Phone: (520) 744-4567 Fax: (520) 744-4683

Arizona Blue Stake 1-800-STAKE-IT 1-800-782-5348 Call two working days before you dig

Pima County Department of Transportation

ROADWAY DETAILS

MAGEE RD. - LA CAÑADA DR. - ORACLE RD. (SR 77)
PROJECT NO. 4MRLCO

MAGEE RD. IMPROVEMENTS - LA CAÑADA DR. TO ORACLE RD. (SR 77) - PROJECT NO. 4MRLCO

FILE NAME: S:\10-077 Magee Road\Civil\CADD\RD\RD04.dgn DATE: 12/27/12 TIME: 5:18:28 PM aherrera

F.H.W.A. REGION	STATE	PROJECT NO.	SHEET NO.	TOTAL SHEETS	AS BUILT
9	ARIZ.	STP-PPM-0(209)D	26	273	

SS693 01C

1. Access Ramp Control Point See Table this Sheet for Location (Typ.)
2. Detectable Warning Strip 6' X 2' (Typ.) See Detail RD16
3. Rough Broom Finish (Typ.)
4. See Plans for Radius
5. Blended Transition (Typ.)
6. Mid-Point of Curb Return

◪ Provide Minimum of 6' of Sidewalk Along Curbline (Typ.)

▲ 6' at Back of Curb

■ Blended Transition

◨ 6' Minimum, 15' Maximum

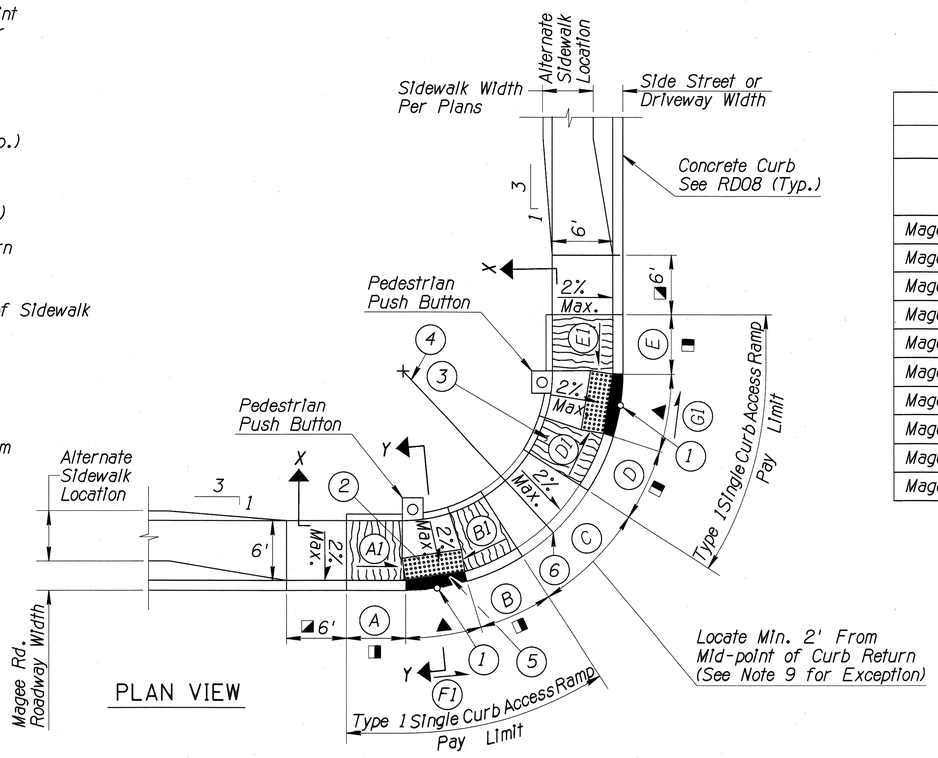

PLAN VIEW

Double Curb Access Ramp												
Ramp Control Point (1)	(A)	(A1)	(B)	(B1)	(C)	(D)	(D1)	(E)	(E1)	(F1)	(G1)
Location Sta. & Offset	Length (FT.)	Slope (%)	Length (FT.)	Slope (%)	Length (FT.)	Length (FT.)	Slope (%)	Length (FT.)	Slope (%)	Slope (%)	Slope (%)
Magee Rd. 454+36.01, 44.65' Rt.	6	7.5	7	8.3	2.0	6	7.5	7	8.3	-0.9	-0.9
Magee Rd. 454+50.43, 59.06' Rt.											
Magee Rd. 467+21.32, 43.10' Rt.	6	6.9	7	8.3	16.8	6	6.8	7	8.3	-1.4	-1.5
Magee Rd. 467+49.96, 62.19' Rt.											
Magee Rd. 467+21.42, 46.78' Lt.	6	5.7	8	8.3	14.7	6	8.0	6	8.3	-2.6	-0.3
Magee Rd. 467+40.40, 74.31' Lt.											
Magee Rd. 468+05.43, 74.21' Lt.	7	8.3	6	6.6	17.7	7	8.3	6	7.3	1.8	1.0
Magee Rd. 468+35.06, 55.04' Lt.											
Magee Rd. 468+18.32, 62.26' Rt.	8	8.3	6	5.6	4.2	7	8.3	6	6.9	2.8	1.4
Magee Rd. 468+34.76, 46.29' Rt.											

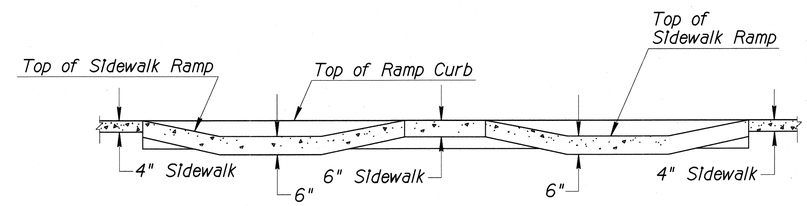

SECTION X-X

NOTES:

1. Pedestrian Push Button Pole or Traffic Signal Pole. See Traffic Signal Plans for Additional Information.
2. See PC/COT Std. Dtl. 200 for Joint Requirements.
3. Ramp Joints Along Returns Shall be Radial from the Back of Curb or Back of Detectable Warning Strip.
4. Drainage Inlets are Not Permitted within Crosswalks or within 10' of an Access Ramp.
5. Type 1 Double Curb Access Ramp Shall be Paid for Under Bid Item No. 9080280, Curb Access Ramp, PC/COT Std. Dtl. 207 (Type 1).
6. See Table This Sheet for Ramp Location. Curb Access Ramp Should be Oriented to Align with the Crosswalk or Stop Line, Median Refuge Area, and with the Opposite Access Ramp in the Direction of Pedestrian Travel.
7. Lengths Along Edge of Pavement.
8. Refer to Staking Sheets for Additional Grading.
9. Curb Access Ramp Location is Not Restricted within Curb Radii on Local Streets and Residential Collectors with a Maximum 2,500 Vehicles Per Day and which is Not Adjacent to a Major Arterial.

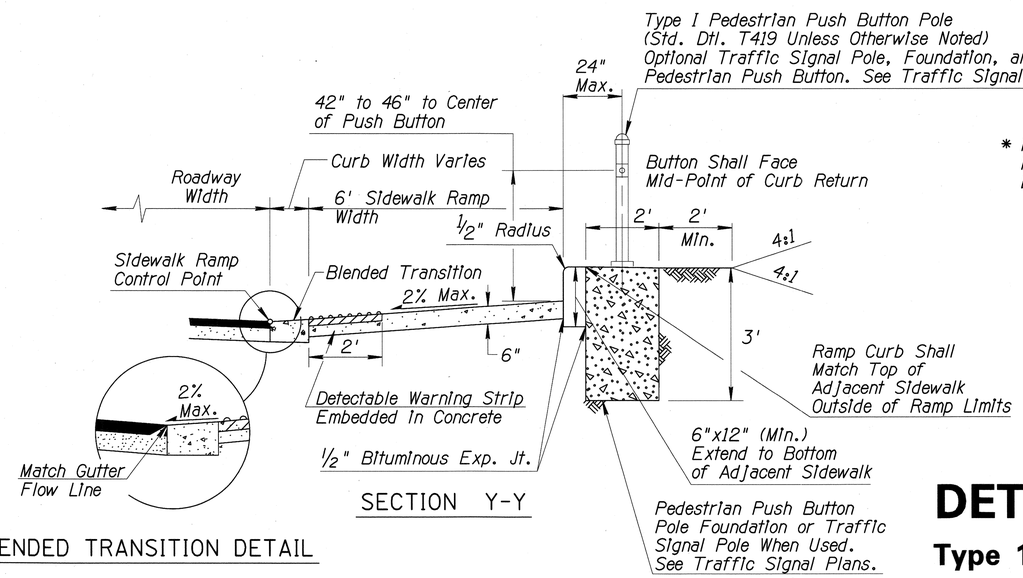

SECTION Y-Y

BLENDED TRANSITION DETAIL

* Pedestrian Push Button and Pole Shall Be Placed Only When Applicable and Approved by PCDOT Engineering

DETAIL RD04

Type 1 Double Curb Access Ramp

Scale:	N.T.S.	Sheet RD05 of RD13	Page 26 of 273

Priscilla S. Cornello, P.E., Director

Designed	MBK/MBD/RGN	12/12
Drawn	MDC/JDB/RGN	12/12
Checked	JDS	12/12
Proj. Engr.	AJH	12/12

No.	Revision Description	Engineer	Date

Pima County Department of Transportation

ROADWAY DETAILS

MAGEE RD.
LA CAÑADA DR. - ORACLE RD. (SR 77)
PROJECT NO. 4MRLCO

eps group, Inc.
Engineers, Planners & Surveyors
8710 N. Thornydale Rd., Ste. 140, Tucson, Arizona 85742
Phone (520) 575-8818 Fax (520) 575-8801

Arizona Blue Stake
1-800-STAKE-IT
(Or two working days before you dig)

MAGEE RD. IMPROVEMENTS - LA CAÑADA DR. TO ORACLE RD. (SR 77) - PROJECT NO. 4MRLCO

FILE NAME: s:\10-077 magee road\civil\cadd\rd\RD05.dgn DATE: 12/27/12 TIME: 5:18:50 PM aherrera

F.H.W.A. REGION	STATE	PROJECT NO.	SHEET NO.	TOTAL SHEETS	AS BUILT
9	ARIZ.	STP-PPM-0(209)D	27	273	
		SS693 01C			

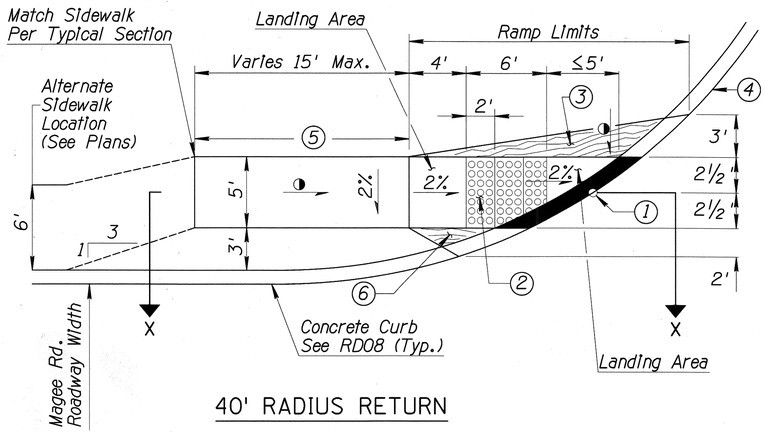

40' RADIUS RETURN

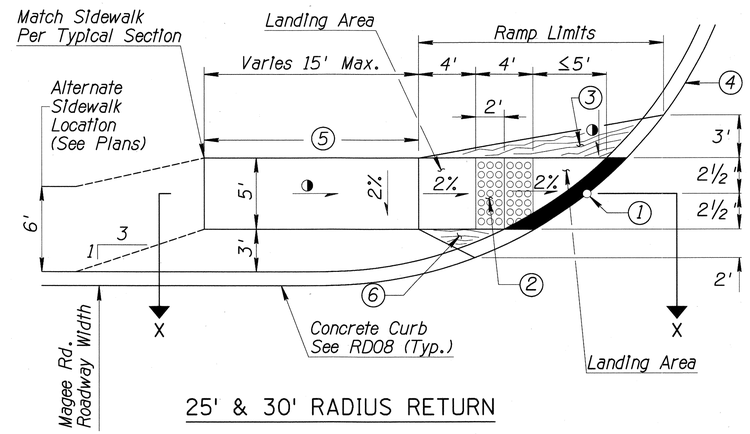

25' & 30' RADIUS RETURN

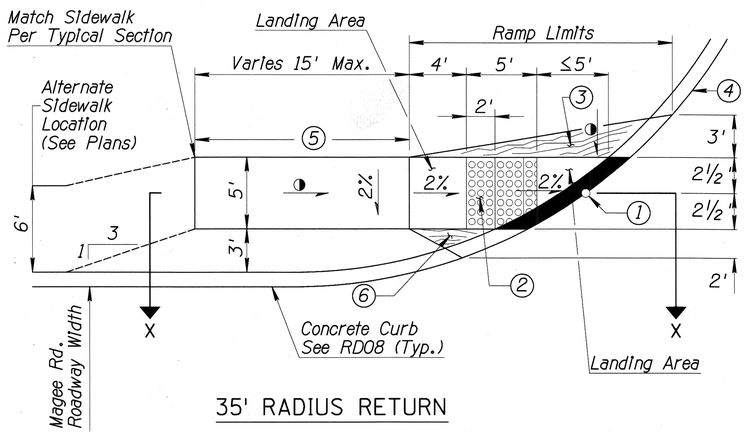

35' RADIUS RETURN

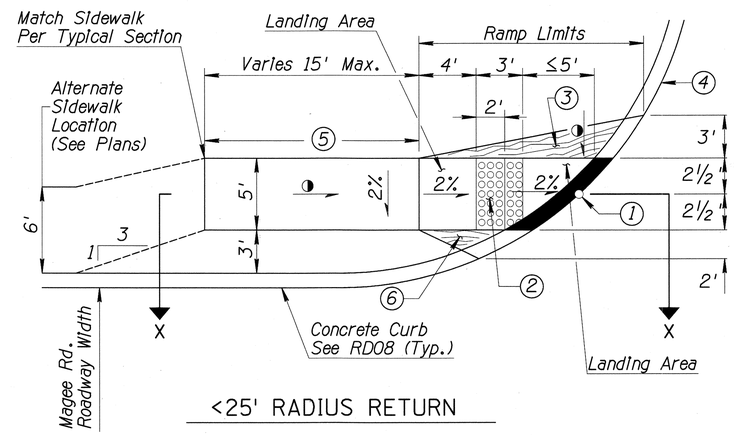

<25' RADIUS RETURN

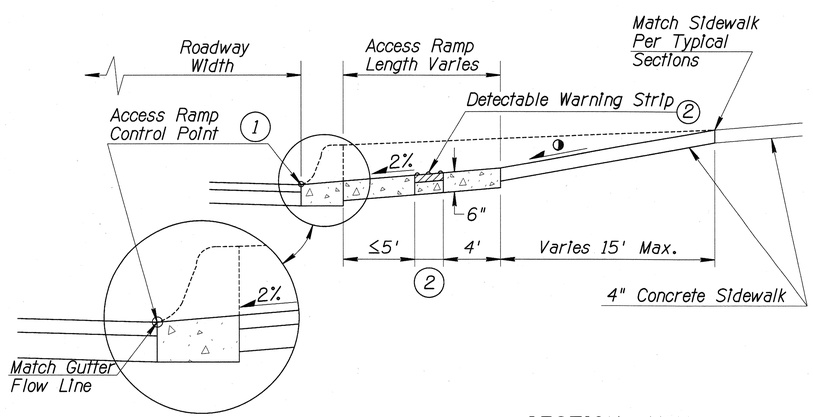

BLENDED TRANSITION DETAIL

SECTION X-X

1. Access Ramp Control Point See Table this Sheet for Location. (Sidewalk Mid-point).
2. Detectable Warning Strip. For Length See Details Above.
3. Rough Broom Finish. 1/4" Deep Scored Joint Shall be Placed Perpendicular to Direction of Travel at the Midway Point of Access Ramp Length.
4. See Plans for Radius.
5. Transition Grading to Match Typical Section.
6. Rough Broom Finish.

Blended Transition

Slope 5% Min. and 8.33% (12:1) Max.

Type III Directional Curb Access Ramp	
Control Point (1) Location - Sta. & Offset	Radius (ft)
Magee Rd. 421+95.29, 54.50' Rt.	35'
Magee Rd. 427+80.80, 49.50' Rt.	25'
Magee Rd. 428+22.53, 49.50' Rt.	25'
Magee Rd. 430+59.70, 49.50' Rt.	40'
Magee Rd. 431+35.26, 49.50' Rt.	40'
Magee Rd. 433+55.76, 49.50' Rt.	25'
Magee Rd. 434+09.75, 49.50' Rt.	25'
Magee Rd. 437+09.61, 49.50' Rt.	25'
Magee Rd. 437+49.98, 49.50' Rt.	25'
Magee Rd. 462+21.20, 49.50' Rt.	30'
Magee Rd. 462+70.54, 49.50' Rt.	30'
Magee Rd. 469+95.72, 54.30' Rt.	25'
Magee Rd. 470+36.20, 57.09' Rt.	25'
Magee Rd. 470+82.68, 60.30' Rt.	25'
Magee Rd. 471+29.47, 63.36' Rt.	25'
Magee Rd. 472+88.96, 66.12' Rt.	25'
Magee Rd. 473+31.33, 66.85' Rt.	25'
Magee Rd. 476+09.47, 67.50' Rt.	35'
Magee Rd. 476+65.72, 67.50' Rt.	15'
Magee Rd. 483+20.65, 67.50' Lt.	7.75'
Magee Rd. 483+54.21, 67.43' Lt.	25'

NOTES:

1. See PC/COT Std. Dtl. 200 for Joint Requirements.
2. Drainage Inlets are Not Permitted within Crosswalks or Within 10' of an Access Ramp.
3. Refer to the Staking Sheets for Additional Grading.
4. This Type 3 Directional Curb Access Ramp shall be Paid for Under Bid Item No. 9080282, Curb Access Ramp, PC/COT Std. Dtl. 207 (Type 3).

DETAIL RD05

Type 3 Directional Curb Access Ramp

Scale:	N.T.S.	Sheet RD06 of RD13

Priscilla S. Cornelio, P.E., Director

Designed	MDC/JDS/RGN	12/12
Drawn	MDC/JDS/RGN	12/12
Checked	JDS	12/12
Proj. Engr.	AJH	12/12

No.	Revision Description	Engineer	Date

Pima County Department of Transportation

ROADWAY DETAILS
MAGEE RD.
LA CAÑADA DR. - ORACLE RD. (SR 77)
PROJECT NO. 4MRLCO

eps group, Inc.
Engineers, Planners & Surveyors
8710 N. Thornydale Rd., Ste. 140, Tucson, Arizona 85742
Phone: (520) 575-8215 Fax: (520) 575-8215

Arizona Blue Stake
1-800-STAKE-IT
(Or the locating hotline below this line)

MAGEE RD. IMPROVEMENTS - LA CAÑADA DR. TO ORACLE RD. (SR 77) - PROJECT NO. 4MRLCO

FILE NAME: s:\10-077 magee road\civil\cadd\rd\RD06.dgn DATE: 12/27/12 TIME: 5:18:53 PM aherrera

F.H.W.A. REGION	STATE	PROJECT NO.	SHEET NO.	TOTAL SHEETS	AS BUILT
9	ARIZ.	STP-PPM-0(209)D	28	273	

SS693 01C

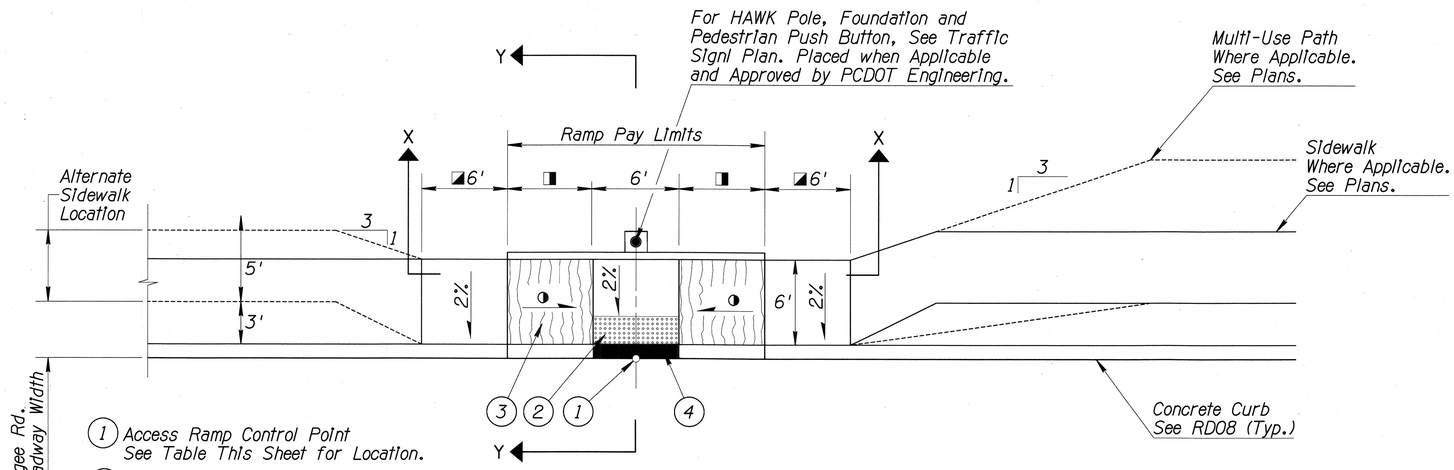

PLAN

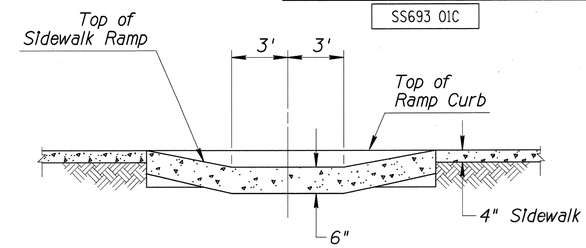

SECTION X-X

1. Access Ramp Control Point See Table This Sheet for Location.
2. Detectable Warning 6' X 2' (Typ.) See Detail RD16
3. Rough Broom Finish Use (Typ.)
4. Blended Transition (Typ.)

◪ Provide Minimum of 6' of Sidewalk Along Curbline (Typ.)

■ Blended Transition

◨ 6' Minimum, 15' Maximum

◑ Slope 5% Min. and 8.33% (12:1) Max.

Type III Directional Curb Access Ramp
Control Point (1)
Location Sta. & Offset
Magee Rd. 441+39.06, 43.00' Rt.
Magee Rd. 454+35.59, 43.00' Lt.
Magee Rd. 484+57.47, 66.13' Rt.

NOTES:

1. See Std. Dtl. 200 for Joint Requirements.
2. Drainage Inlets are Not Permitted within Crosswalks or Within 10' of an Access Ramp.
3. Type 2 Single Curb Access Ramp Shall be Paid for Under Bid Item No. 9080281, Curb Access Ramp, PC/COT Std. Dtl. 207 (Type 2).
4. See Table This Sheet for Ramp Location. Curb Access Ramp Should be Oriented to Align with the Crosswalk or Stop Line, Median Refuge Area, and with the Opposite Access Ramp in the Direction of Pedestrian Travel.
5. Refer to the Staking Sheets for Additional Grading.

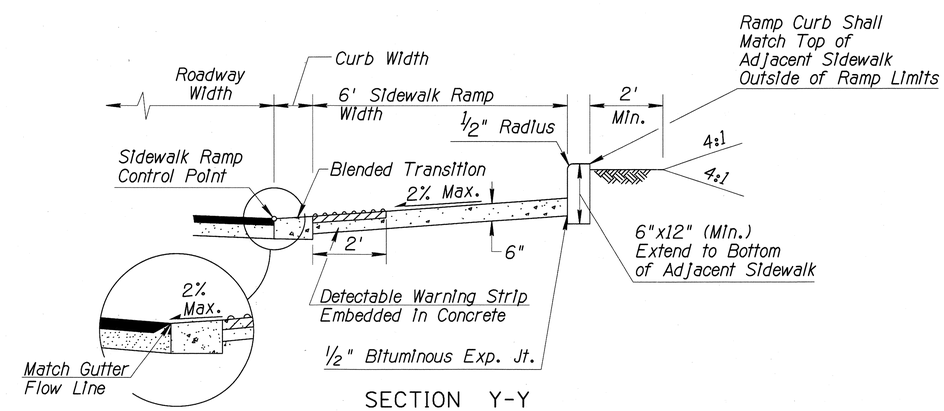

SECTION Y-Y

BLENDED TRANSITION DETAIL

DETAIL RD06

Type 2 Single Curb Access Ramp

Priscilla S. Cornelio, P.E., Director

No.	Revision Description	Engineer	Date

		Date
Designed	MPR/MDB/BGN	12/12
Drawn	MDC/JDB/BGN	12/12
Checked	JDG	12/12
Proj. Engr.	AJH	12/12

Pima County Department of Transportation

ROADWAY DETAILS
MAGEE RD.
LA CAÑADA DR. - ORACLE RD. (SR 77)
PROJECT NO. 4MRLCO

eps group, Inc.
Engineers, Planners & Surveyors
8719 N. Thornydale Rd., Ste. 140, Tucson, Arizona 85742
Phone (520) 408-1400 Fax (520) 408-1403

Arizona Blue Stake
1-800-STAKE-IT
1-800-782-5348

MAGEE RD. IMPROVEMENTS - LA CAÑADA DR. TO ORACLE RD. (SR 77) - PROJECT NO. 4MRLCO

Scale:	N.T.S.	Sheet RD07 of RD13	Page 28 of 273

FILE NAME: s:\10-077 magee road\civil\cadd\rd\RD07.dgn DATE: 12/27/12 TIME: 5:18:56 PM aherrera

F.H.W.A. REGION	STATE	PROJECT NO.	SHEET NO.	TOTAL SHEETS	AS BUILT
9	ARIZ.	STP-PPM-0(209)D	29	273	
		SS693 01C			

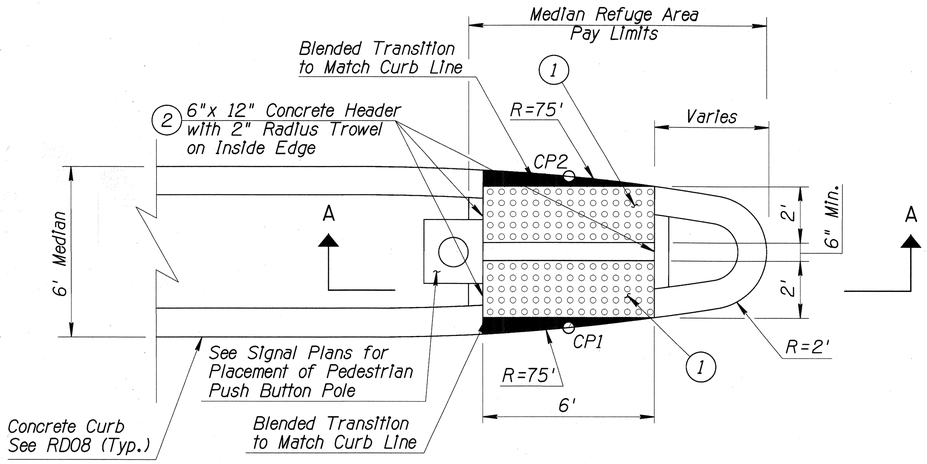

PLAN VIEW - 6' MEDIAN

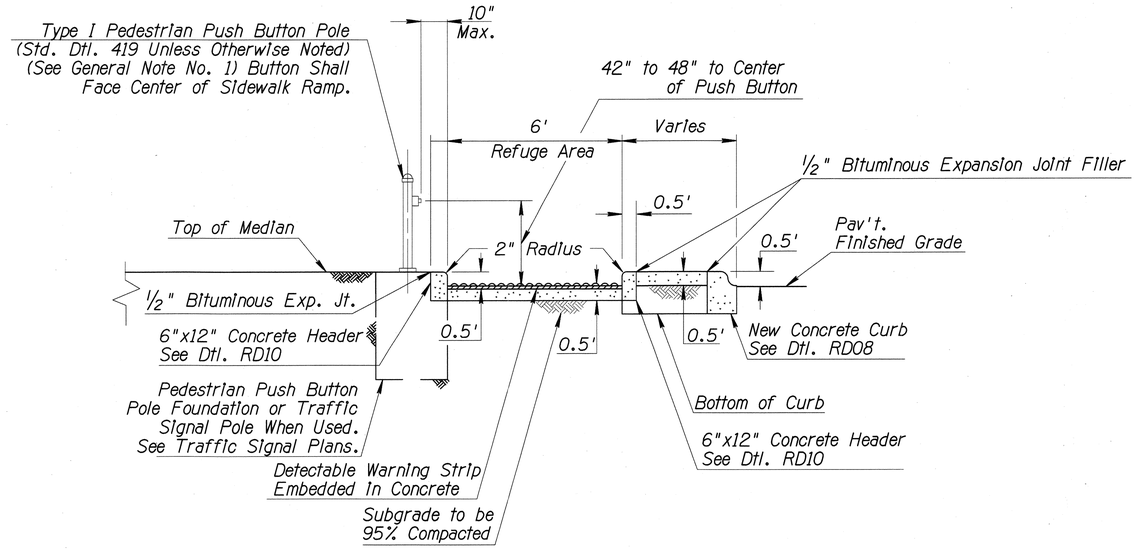

SECTION A-A

NOTES:

1. Pedestrian Push Button Pole. See Traffic Signal Plans for Location. The Pole Foundation Shall be Notched at Back of the Ramp Curb when Required.
2. See PC/COT Std. Dtl. 200 for Joint Requirements.
3. Drainage Inlets are Not Permitted within Crosswalks or within 10' of an Access Ramp.
4. Refer to the Staking Sheets for Additional Grading.
5. Skew Concrete Header to Match Pedestrian Crosswalk Striping.
6. This Median Refuge Area Median Nose Shall be Paid for Under Bid Item No. 9080285, Median Refuge Area (Type 1).
7. See Geometric Data Sheets and Staking Sheets for Additional Information.
8. Control Points (CPX) Represents the Midpoint of the Ramp.

■ Blended Transition

(1) Detectable Warning 6' X 2' (Typ.) See Detail RD16

(2) 6" x 12" Concrete Header with 2" Radius Trowel Inside Edge. See Detail RD10

	Median Refuge Area Median Nose Control Data			
	Control Point	Station & Offset	Elevation	Slope Between Control Points Median Refuge Slope
6' MEDIAN	CP1	Magee Rd. 454+36.13, 6.38' Lt.	2533.83	3.44%
	CP2	Magee Rd. 454+36.13, 11.62' Lt.	2533.65	
	CP1	Magee Rd. 467+19.88, 6.38' Lt.	2561.40	3.44%
	CP2	Magee Rd. 467+19.88, 11.62' Lt.	2561.22	
	CP1	Magee Rd. 468+34.84, 6.38' Rt.	2563.65	3.44%
	CP2	Magee Rd. 468+34.84, 11.62' Rt.	2563.47	
	CP1*	Magee Rd. 478+49.59, 12.00' Lt.	2592.05	1.15%
	CP2*	Magee Rd. 478+50.67, 18.00' Lt.	2592.12	
	CP1*	Magee Rd. 480+18.40, 12.00' Rt.	2593.19	0.82%
	CP2*	Magee Rd. 480+17.31, 18.00' Rt.	2593.14	

* Median Refuge Area and Median Nose shall be built per ADOT Std. C-05.30 and C-05.40. See Sheet PP08.

DETAIL RD07

Median Refuge Area Median Nose

Scale: N.T.S. | Sheet RD08 of RD13 | Page 29 of 273

Priscilla S. Cornelio, P.E., Director

No.	Revision Description	Engineer	Date

		Date
Designed	MBC/JDB/BGN	12/12
Drawn	MDC/JDB/BGN	12/12
Checked	JDB	12/12
Proj. Engr.	AJH	12/12

Pima County Department of Transportation

ROADWAY DETAILS
MAGEE RD.
LA CAÑADA DR. - ORACLE RD. (SR 77)
PROJECT NO. 4MRLCO

eps group, Inc.
Engineers, Planners & Surveyors
8710 N. Thornydale Rd., Ste. 140, Tucson, Arizona 85742
Phone (520) 408-1400 Fax (520) 408-1403

Arizona Blue Stake
1-800-STAKE-IT
1-800-782-5348
Call two working days before You Dig

MAGEE RD. IMPROVEMENTS - LA CAÑADA DR. TO ORACLE RD. (SR 77) - PROJECT NO. 4MRLCO

FILE NAME: s:\10-077 magee road\civil\cadd\rd\RD08.dgn | DATE: 12/27/12 | TIME: 5:18:59 PM | aherrera

F.H.W.A. REGION	STATE	PROJECT NO.	SHEET NO.	TOTAL SHEETS	AS BUILT
9	ARIZ.	STP-PPM-0(209)D	30	273	

SS693 01C

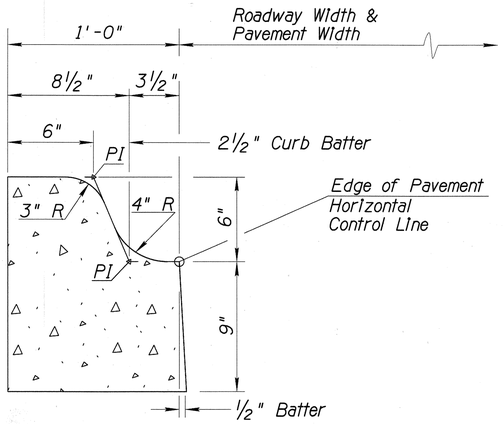

DETAIL RD08

Concrete Curb

Note: See Detail RD15 for depressed curb.

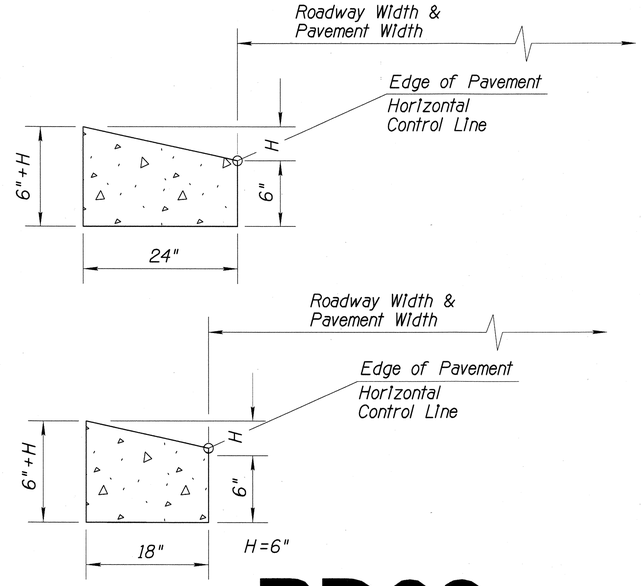

DETAIL RD09

Concrete Wedge Curb

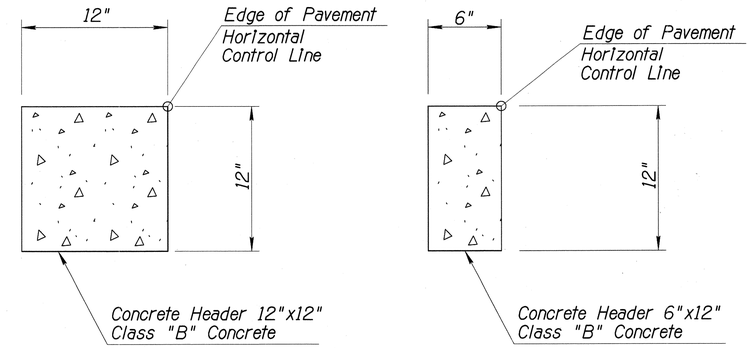

12" CONCRETE HEADER

6" CONCRETE HEADER

DETAIL RD10

Concrete Header

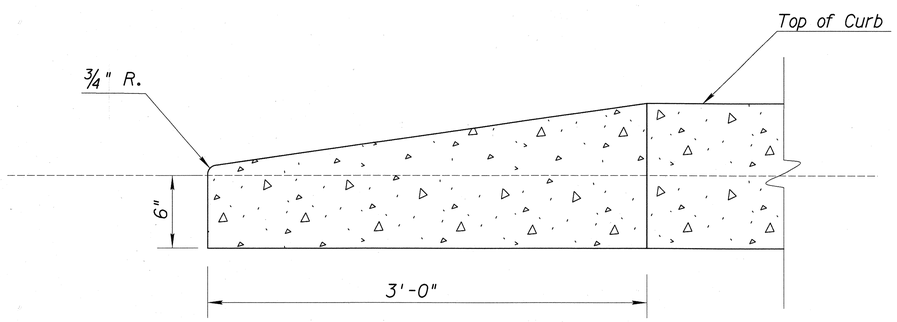

DETAIL RD11

Concrete Curb Terminal Section

NOTES:

1. All Concrete Curbs and Transitions, Shall Have a Minimum Compressive Strength of 2,500 P.S.I. for Class "B" Concrete.
2. Maximum Spacing on Scored Joints Shall be 10 Feet.
3. One Half Inch Thick Expansion Joints Shall be Located at Tangent Points in Curb Returns, Transitions, and at a Maximum of 60 Feet Intervals. Expansion Material Shall also be Placed Between Curbs and Adjacent Structures, Sidewalks, Driveways and Handicap Ramps. The ½" Joint Filler Shall Extend the Full Depth of the Concrete.
4. Concrete Shall be Finished with a Steel Trowel Followed by Brushing with a Fine Brush Along the Length of the Curb.
5. All Flow Lines of Concrete Curb Shall be Troweled to an Accurate Grade.
6. When the Slope of the Pavement is away from the Curb the Slope of the Curb Shall Match the Pavement Cross Slope.
7. Curb may be Constructed by the use of Forms or may be Slip Formed.
8. All Exposed Edges and Hand Tooled Joints Shall be Finished with a Tool Having a ½" Radius Unless a Larger Radius is Indicated by the Applicable Standard Detail or Project Plans.
9. Concrete Curb (PC/COT Std. Dtl. 209) (Type I) Shall be Paid for Under Bid Item No. 9080001.
10. Concrete Wedge Curb (PC/COT Std. Dtl. 209) Shall be Paid for Under Bid Item No. 9080006.
11. Concrete Header Shall be Paid for Under Bid Item No. 9080402.
12. Concrete Curb Terminal Section (PC/COT Std. Dtl. 212) Shall be Paid for Under Bid Item No. 9080090.

Priscilla S. Cornelio, P.E., Director

No.	Revision Description	Engineer	Date

		Date
Designed	MBC/MBB/BGN	12/12
Drawn	MDC/JDB/BGN	12/12
Checked	JDG	12/12
Proj. Engr.	AJH	12/12

Registered Professional Engineer (Civil) CERTIFICATE NO. 40219 ANTHONY J. HERRERA Date Signed 12/21/12 ARIZONA, U.S.A. Expires 12/31/13

eps group, Inc. Engineers, Planners & Surveyors 8719 N. Thornydale Rd., Ste. 140, Tucson, Arizona 85742 Phone (520) 408-1400 Fax (520) 408-1403

Arizona Blue Stake 1-800-STAKE-IT 1-800-782-5348 Call Two Working Days Before You Dig

Pima County Department of Transportation

ROADWAY DETAILS

MAGEE RD.
LA CAÑADA DR. - ORACLE RD. (SR 77)
PROJECT NO. 4MRLCO

MAGEE RD. IMPROVEMENTS - LA CAÑADA DR. TO ORACLE RD. (SR 77) - PROJECT NO. 4MRLCO

Scale:	N.T.S.	Sheet RD09 of RD13	Page 30 of 273

FILE NAME: s:\10-077 magee road\civil\cadd\rd\RD09.dgn DATE: 12/27/12 TIME: 5:19:01 PM aherrera

F.H.W.A. REGION	STATE	PROJECT NO.	SHEET NO.	TOTAL SHEETS	AS BUILT
9	ARIZ.	STP-PPM-0(209)D	31	273	

SS693 01C

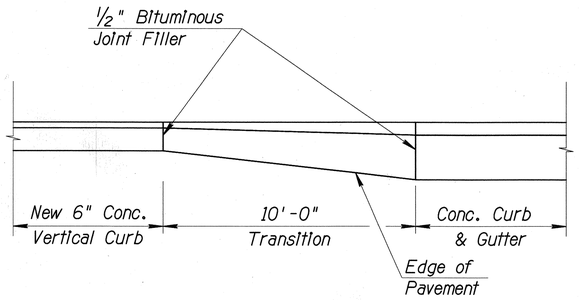

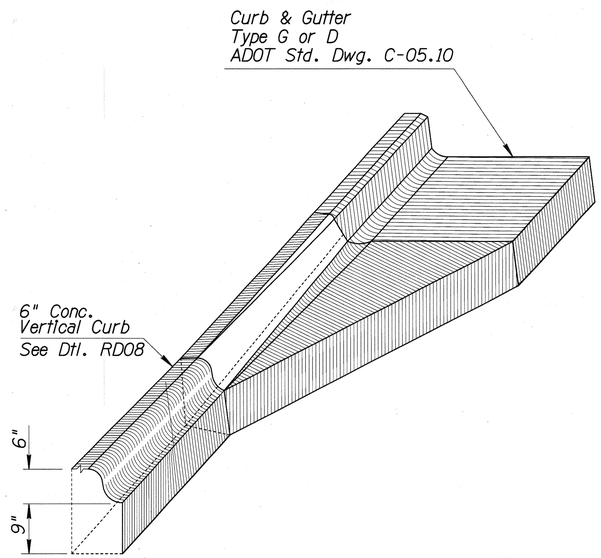

This Curb Transition Shall be Paid Under Bid Item No. 9080112, Concrete Curb Transition (PC/COT Std. Dtl. 210)

DETAIL RD12

Curb Transition Section
6" Conc. Vertical Curb to Curb and Gutter

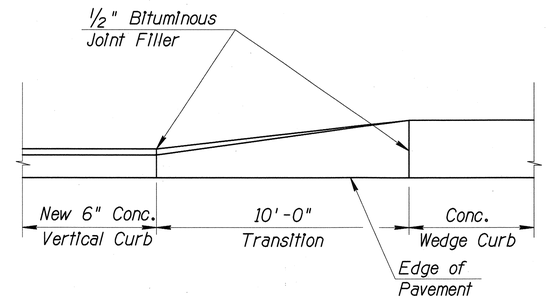

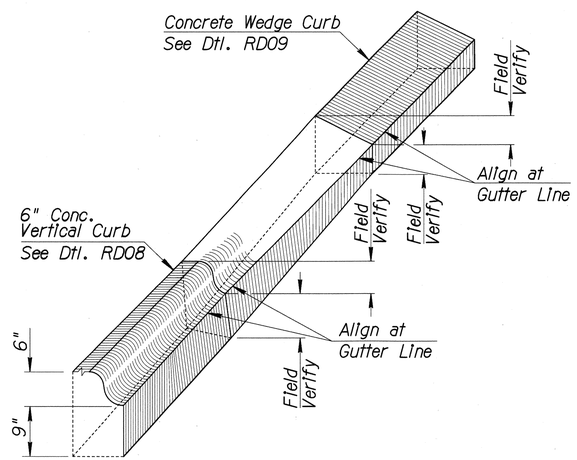

This Curb Transition Shall be Paid Under Bid Item No. 9080112, Concrete Curb Transition (PC/COT Std. Dtl. 210)

DETAIL RD13

Curb Transition Section
6" Conc. Vertical Curb to Conc. Wedge Curb

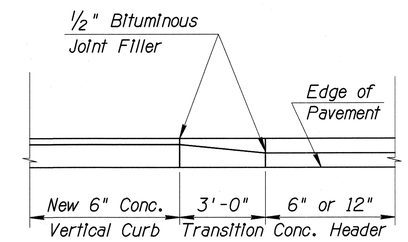

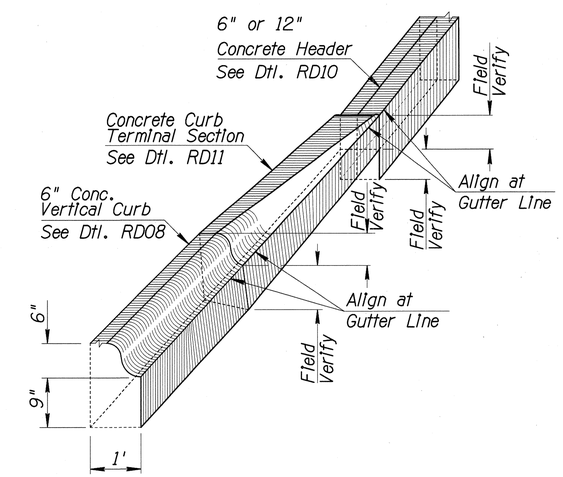

This Curb Transition Shall be Paid Under Bid Item No. 9080090, Concrete Curb Terminal Section (PC/COT Std. Dtl. 212)

DETAIL RD14

Curb Transition Section
6" Conc. Vertical Curb to Curb
Terminal Section to Conc. Header

Priscilla S. Cornelio, P.E., Director

No.	Revision Description	Engineer	Date

		Date
Designed	MBC/MBB/BGN	12/12
Drawn	MDC/JDB/BGN	12/12
Checked	JDG	12/12
Proj. Engr.	AJH	12/12

Registered Professional Engineer (Civil) CERTIFICATE NO. 40219 ANTHONY J. HERRERA Date Signed 12/27/12 ARIZONA, U.S.A. Expires 12/31/15

eps group, Inc. Engineers, Planners & Surveyors 8710 N. Thornydale Rd., Ste. 140, Tucson, Arizona 85742 Phone (520) 408-1400 Fax (520) 408-1403

Arizona Blue Stake 1-800-STAKE-IT 1-800-782-5348 Call Two Working Days Before You Dig

Pima County Department of Transportation

ROADWAY DETAILS
MAGEE RD.
LA CAÑADA DR. - ORACLE RD. (SR 77)
PROJECT NO. 4MRLCO

MAGEE RD. IMPROVEMENTS - LA CAÑADA DR. TO ORACLE RD. (SR 77) - PROJECT NO. 4MRLCO

Scale:	N.T.S.	Sheet RD10 of RD13	Page 31 of 273

FILE NAME: S:\10-077 Magee Road\Civil\CADD\RD\RD10.dgn DATE: 12/27/12 TIME: 5:20:23 PM aherrera

F.H.W.A. REGION	STATE	PROJECT NO.	SHEET NO.	TOTAL SHEETS	AS BUILT
9	ARIZ.	STP-PPM-0(209)D	32	273	

SS693 01C

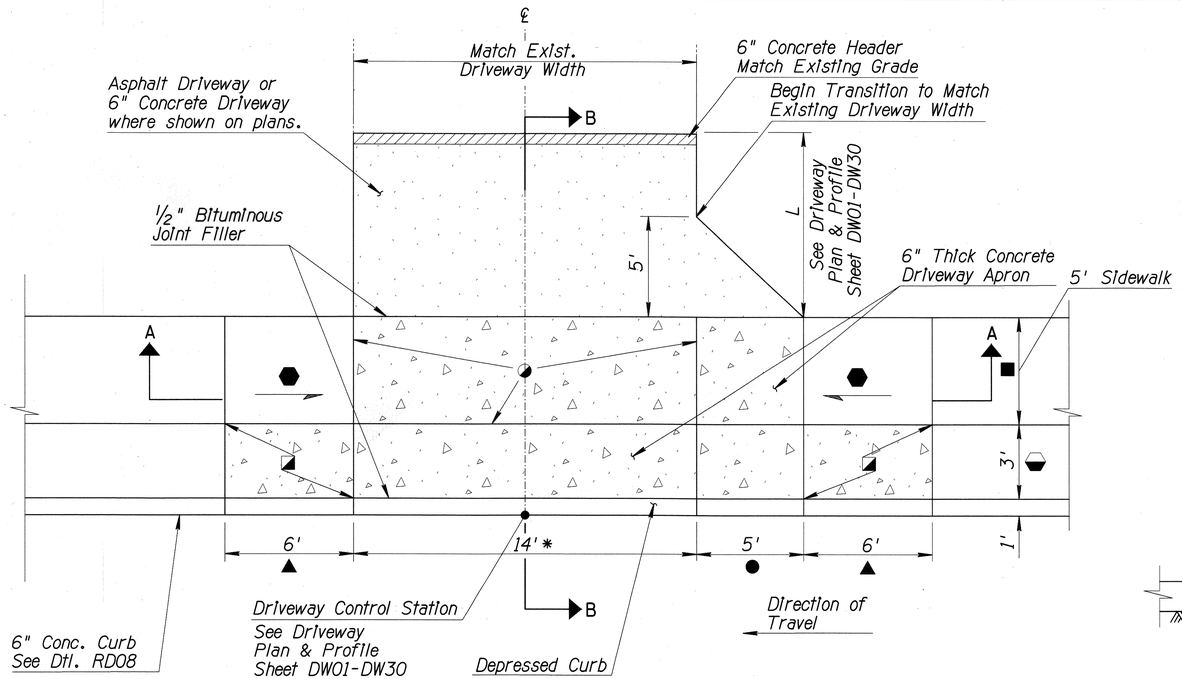

PLAN VIEW

- ◐ 1/4" Deep Scored Joints Evenly Spaced (8" Max. Spacing).
- ● Additional Depressed Curb. Located on Ingress Side In the Direction of Travel. Use for Posted Speeds ≥ 35 MPH.
- ⬢ Sidewalk Transition to Driveway Grade at 12:1 Max.
- * 14' width unless noted on plans. See Driveway Plan & Profile Sheets DW01-DW30.
- ▲ Slope to Meet Depressed Curb.
- ◪ Warp to Match Sidewalk Transition.
- Driveway Apron Limit.
- ■ Extend to 10' When Multi-Use Path Matches Into Driveway Apron.
- ⬙ Distance Varies for Driveway Aprons Located on Driveway Turnouts. 3' for Driveway Turnouts with Multi-Use Path, 0' for all other Driveway Turnouts. See Dtl. RD02.

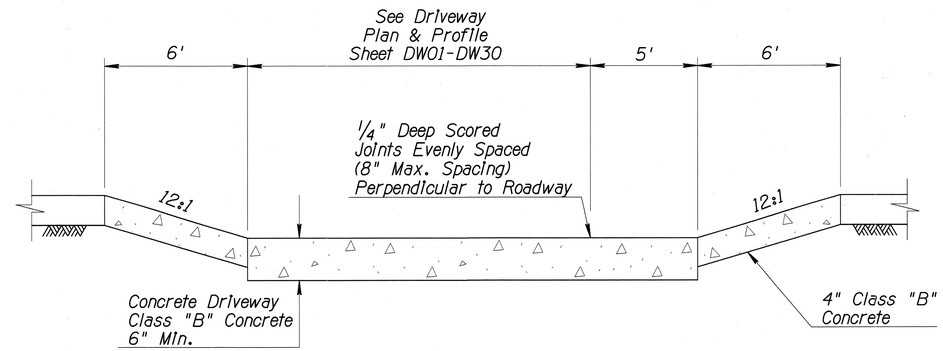

SECTION A-A

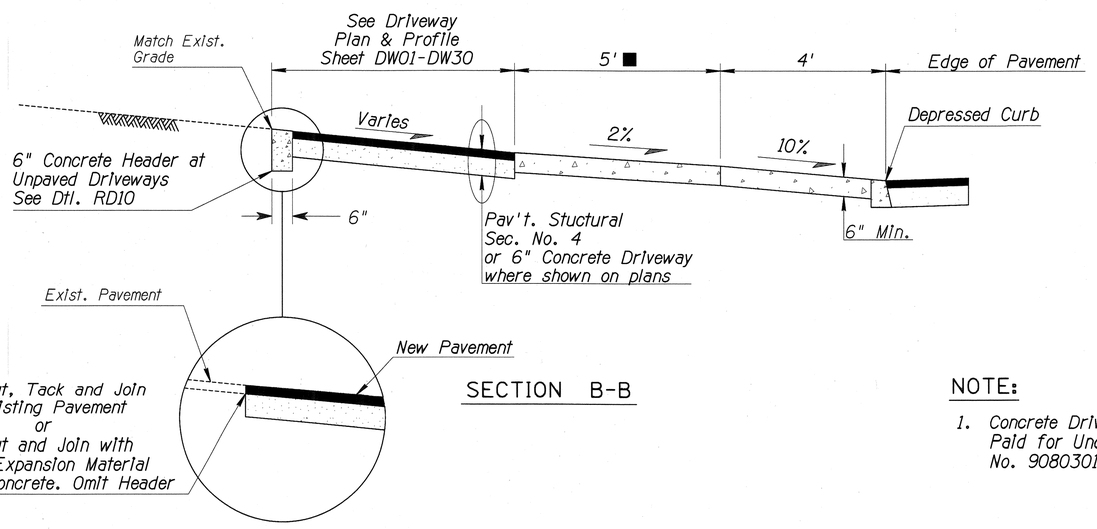

SECTION B-B

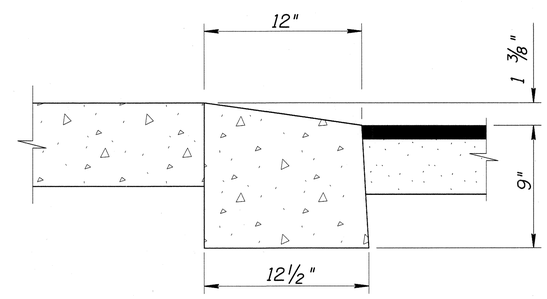

DEPRESSED CURB DETAIL

NOTE:

1. Concrete Driveway Apron Shall be Paid for Under Bid Item No. 9080301, Concrete Driveway.

DETAIL RD15

Concrete Driveway Apron

Scale:	N.T.S.	Sheet RD11 of RD13

Priscilla S. Cornelio, P.E., Director

No.	Revision Description	Engineer	Date

		Date
Designed	MRC/JDB/BGN	12/12
Drawn	MRC/JDB/BGN	12/12
Checked	JDS	12/12
Proj. Engr.	AJH	12/12

Pima County Department of Transportation

ROADWAY DETAILS

MAGEE RD.
LA CAÑADA DR. - ORACLE RD. (SR 77)
PROJECT NO. 4MRLCO

Arizona Blue Stake 1-800-STAKE-IT 1-800-782-5348

eps group, Inc. Engineers, Planners & Surveyors 8710 N. Thornydale Rd., Ste. 140, Tucson, Arizona 85742 Phone (520) 408-1400 Fax (520) 408-1403

MAGEE RD. IMPROVEMENTS - LA CAÑADA DR. TO ORACLE RD. (SR 77) - PROJECT NO. 4MRLCO

FILE NAME: S:\10-077 Magee Road\Civil\CADD\RD\RD11.dgn DATE: 12/27/12 TIME: 5:20:59 PM aherrera

F.H.W.A. REGION	STATE	PROJECT NO.	SHEET NO.	TOTAL SHEETS	AS BUILT
9	ARIZ.	STP-PPM-0(209)D	33	273	

SS693 01C

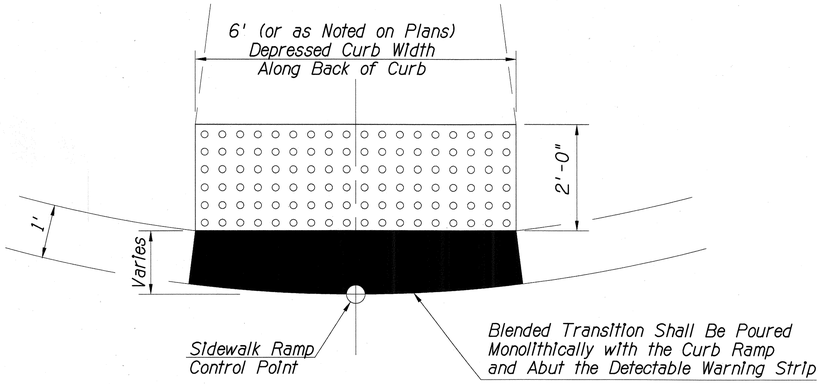

DETECTABLE WARNING STRIP PLAN

NOTES FOR DETECTABLE WARNING SURFACE

1. General Information: Detectable Warnings Shall Consist of a Surface of Truncated Domes Aligned in a Square or Radial Grid Pattern in the Direction of Travel, and Shall Comply with R304 of the Draft Public Rights-of-Way Accessibility Guide Lines.
2. Dome Size: Truncated Domes in a Detectable Warning Surface Shall Have a Base Diameter of 0.9 In. Minimum to 1.4 In. Maximum, a Top Diameter of 50 Percent of the Base Diameter Minimum to 65 Percent of the Base Diameter Maximum, and a Height of 0.2 In.
3. Dome Spacing: Truncated Domes in a Detectable Warning Surface Shall Have a Center-to-Center Spacing of 1.6 In. Minimum and 2.4 In. Maximum and a Base-to-Base Spacing of 0.65 In. Minimum Measured Between the Most Adjacent Domes.
4. Color Contrast: Detectable Warning Surfaces Shall Contrast Visually with Adjacent Gutter, Street or Highway, or Walkway Surface, Either Rights-of-Way or Base-to-Base.
5. Size: Detectable Warning Surfaces Shall Extend 24 In. Minimum in the Direction of Travel and the Full Width of the Curb Ramp (Exclusive of Flares), the Landing, or the Blended Transition.
6. No Other Point of the Leading Edge of the Detectable Warning may be More Than 5 Feet from the Back of Curb.
7. Detectable Warning Strip is Included in the Cost of the Respective Curb Access Ramp.

DETAIL RD16

Detectable Warning Strip

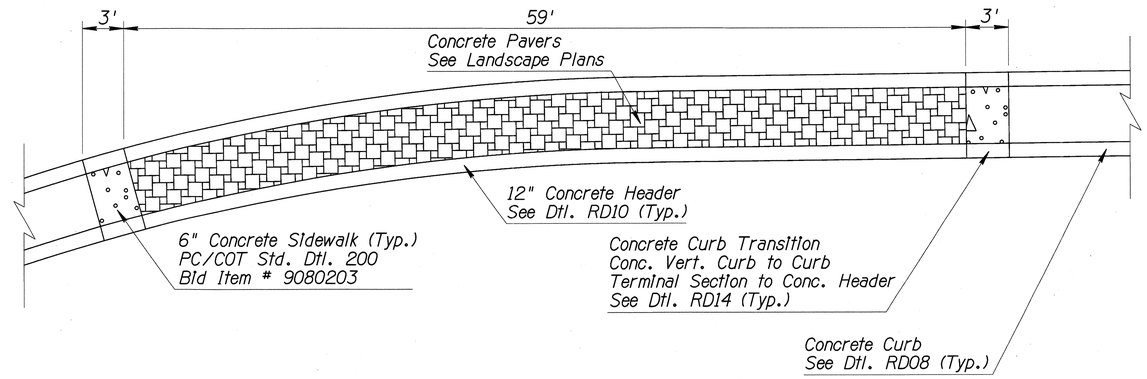

FLUSH MEDIAN - MAGEE RD. STA 430+57 TO 431+22

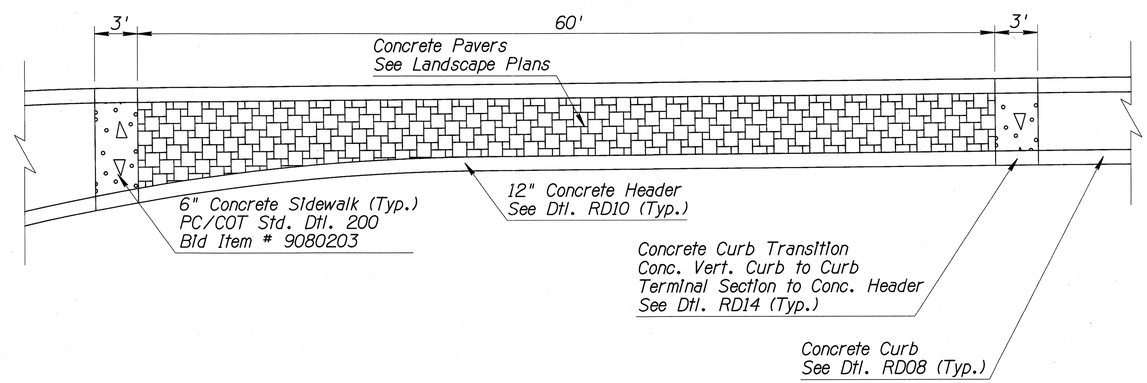

FLUSH MEDIAN - MAGEE RD. STA 470+95 TO 471+61

DETAIL RD17

Flush Median (Fire Truck Access)

Priscilla S. Cornelio, P.E., Director

No.	Revision Description	Engineer	Date

		Date
Designed	MBC/JDB/BGN	12/12
Drawn	MDC/JDB/BGN	12/12
Checked	JDG	12/12
Proj. Engr.	AJH	12/12

Registered Professional Engineer (Civil) CERTIFICATE NO. 40219 ANTHONY J. HERRERA Date Signed 12/27/12 ARIZONA, U.S.A. Expires 12/31/15

epsgroup, Inc.
Engineers, Planners & Surveyors
8710 N. Thornydale Rd., Ste. 140, Tucson, Arizona 85742
Phone (520) 408-1400 Fax (520) 408-1403

Arizona Blue Stake
1-800-STAKE-IT
1-800-782-5348
Call Two Working Days Before You Dig

Pima County Department of Transportation

ROADWAY DETAILS
MAGEE RD.
LA CAÑADA DR. - ORACLE RD. (SR 77)
PROJECT NO. 4MRLCO

MAGEE RD. IMPROVEMENTS - LA CAÑADA DR. TO ORACLE RD. (SR 77) - PROJECT NO. 4MRLCO

Scale:	N.T.S.	Sheet RD12 of RD13	Page 33 of 273

FILE NAME: s:\10-077 magee road\civil\cadd\rd\RD12.dgn DATE: 12/27/12 TIME: 5:19:09 PM aherrera

F.H.W.A. REGION	STATE	PROJECT NO.	SHEET NO.	TOTAL SHEETS	AS BUILT
9	ARIZ.	STP-PPM-0(209)D	34	273	

SS693 01C

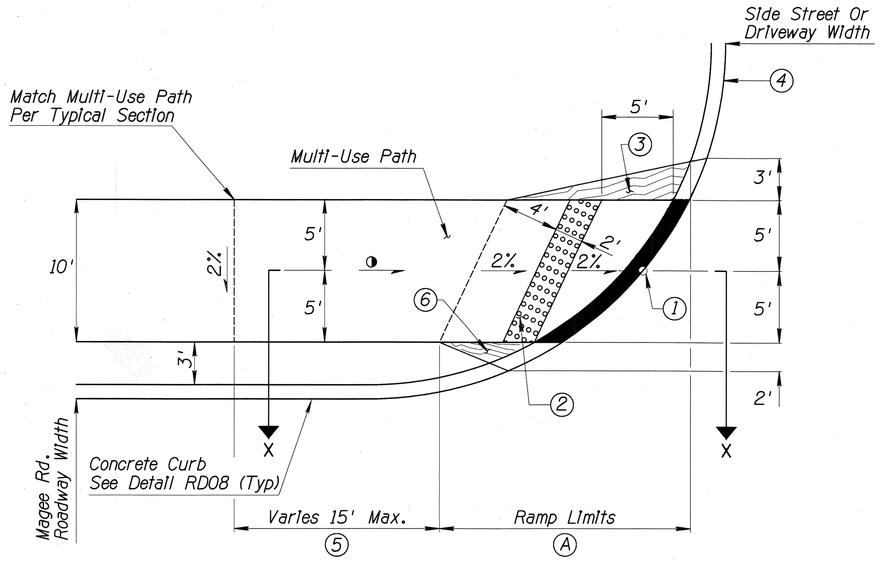

PLAN

Multi-Use Path Offset from Curb

Multi-Use Path Curb Access Ramp	
Control Point (1) Location - Sta. & Offset	(A)
Magee Rd. 462+61.28, 52.00' Lt.	20.06'
Magee Rd. 463+05.26, 52.00' Lt.	20.06'
Magee Rd. 470+06.66, 64.00' Lt.	17.55'
Magee Rd. 470+41.41, 61.35' Lt.	17.55'
Magee Rd. 471+08.26, 57.34' Lt.	17.55'
Magee Rd. 471+46.48, 55.05' Lt.	17.55'
Magee Rd. 472+97.29, 52.74' Lt.	17.56'
Magee Rd. 473+33.42, 53.45' Lt.	17.56'
Magee Rd. 473+99.47, 54.75' Lt.	17.55'
Magee Rd. 474+32.36, 55.40' Lt.	17.55'
Magee Rd. 474+90.51, 56.54' Lt.	17.55'
Magee Rd. 475+19.96, 57.12' Lt.	17.55'
Magee Rd. 475+63.22, 57.97' Lt.	17.55'
Magee Rd. 475+97.24, 58.00' Lt.	17.55'
Magee Rd. 476+72.55, 58.00' Lt.	17.55'
Magee Rd. 477+07.92, 58.00' Lt.	17.55'

(1) Access Ramp Control Point See Table this Sheet for Location. (Sidewalk Mid-point).

(2) Detectable Warning Strip. See Dtl. RD16.

(3) Rough Broom Finish. 1/4" Deep Scored Joint Shall be Placed Perpendicular to Direction of Travel at the Midway Point of Access Ramp Length.

(4) See Plans for Radius.

(5) Transition Grading to Match Typical Section. Varies - 15' Max.

(6) Rough Broom Finish.

■ Blended Transition

◑ Slope 5% Min. and 8.33% (12:1) Max.

* Dimension Measured Perpendicular to Detectable Warning Strip. See Plan View.

NOTES:

1. Drainage Inlets are Not Permitted within Crosswalks or Within 10' of an Access Ramp.
2. Refer to the Staking Sheets for Additional Grading.
3. This Multi-Use Path Curb Access Ramp shall be Paid for Under Bid Item No. 9080287, Curb Access Ramp (Special).

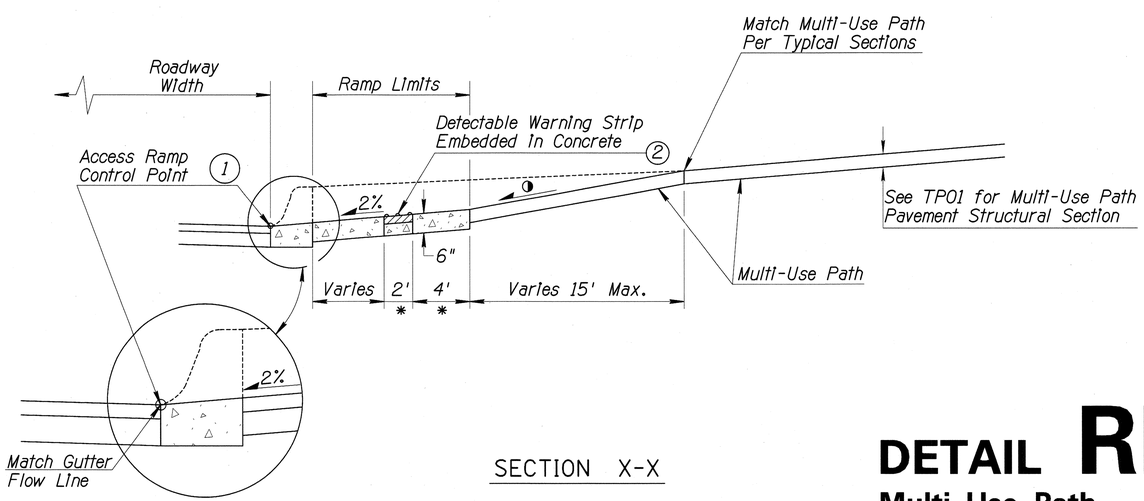

BLENDED TRANSITION DETAIL

SECTION X-X

DETAIL RD18

Multi-Use Path Curb Access Ramp

Scale: N.T.S. | Sheet RD13 of RD13 | Page 34 of 273

Priscilla S. Cornelio, P.E., Director

No.	Revision Description	Engineer	Date

		Date
Designed	MDC/DDB/BGN	12/12
Drawn	MDC/DDB/BGN	12/12
Checked	JDS	12/12
Proj. Engr.	AJH	12/12

REGISTERED PROFESSIONAL ENGINEER (Civil) CERTIFICATE NO. 42219 ANTHONY J. HERRERA Date Signed 12/12/12 ARIZONA U.S.A. Expires 12/31/13

epsgroup, inc.
Engineers, Planners & Surveyors
8115 N. Thornydale Rd., Ste. 140, Tucson, Arizona 85742
Phone (520) 485-1183 Fax (520) 485-1486

Arizona Blue Stake
1-800-STAKE-IT
1-800-782-5348
Call two working days before you dig

Pima County Department of Transportation

ROADWAY DETAILS
DRIVEWAY TURNOUTS
MAGEE RD.
LA CAÑADA DR. - ORACLE RD. (SR 77)
PROJECT NO. 4MRLCO

MAGEE RD. IMPROVEMENTS - LA CAÑADA DR. TO ORACLE RD. (SR 77) - PROJECT NO. 4MRLCO

F.H.W.A. REGION	STATE	PROJECT NO.	SHEET NO.	TOTAL SHEETS	AS BUILT
9	ARIZ.	STP-PPM-0(209)D	35	273	

SS693 01C

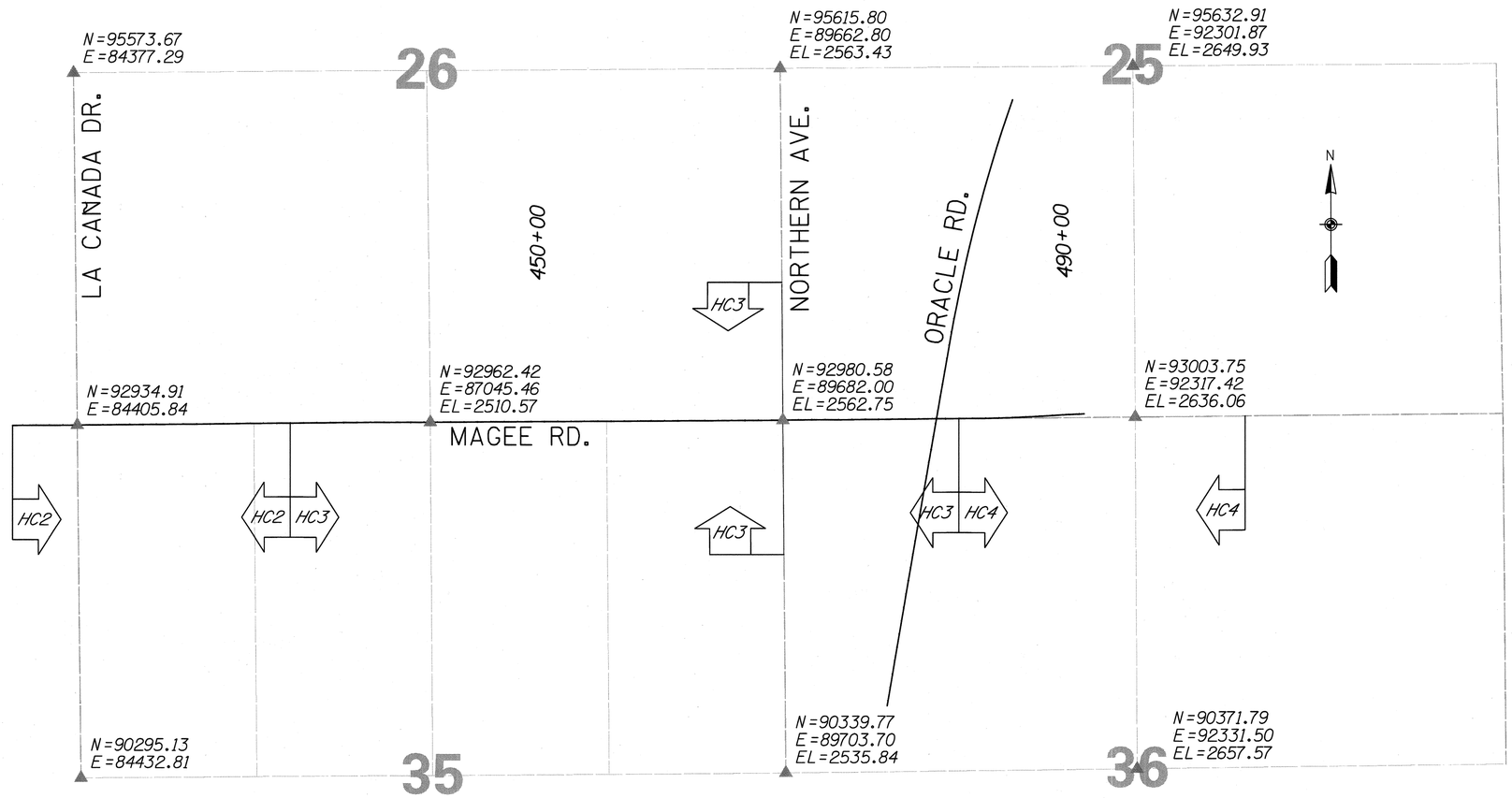

HORIZONTAL CONTROL SHEET INDEX

N.T.S.

NOTE:

For Horizontal Control for Side Streets & Driveways
See Roadway Plan & Profile Sheets

Priscilla S. Cornelio, P.E., Director

No.	Revision Description	Engineer	Date

		Date
Designed	MDC/JDB/BGN	12/12
Drawn	MDC/JDB/BGN	12/12
Checked	JDS	12/12
Proj. Engr.	AJH	12/12

Pima County Department of Transportation

HORIZONTAL CONTROL SHEET

MAGEE RD.
LA CAÑADA DR. - ORACLE RD. (SR 77)
PROJECT NO. 4MRLCO

Arizona Blue Stake
1-800-STAKE-IT
1-800-782-5348

epsgroup, Inc.
Engineers, Planners & Surveyors
8719 N. Thornydale Rd., Ste. 140, Tucson, Arizona 85742
Phone (520) 408-1400 Fax (520) 408-1403

MAGEE RD. IMPROVEMENTS - LA CAÑADA DR. TO ORACLE RD. (SR 77) - PROJECT NO. 4MRLCO

Scale:	N.T.S.	Sheet HC01 of HC04	Page 35 of 273

FILE NAME: S:\10-077 Magee Road\Civil\CADD\HC\4MRLCO_HC01.dgn DATE: 12/27/12 TIME: 5:21:44 PM aherrera

F.H.W.A. REGION	STATE	PROJECT NO.	SHEET NO.	TOTAL SHEETS	AS BUILT
9	ARIZ.	STP-PPM-0(209)D	36	273	

SS693 01C

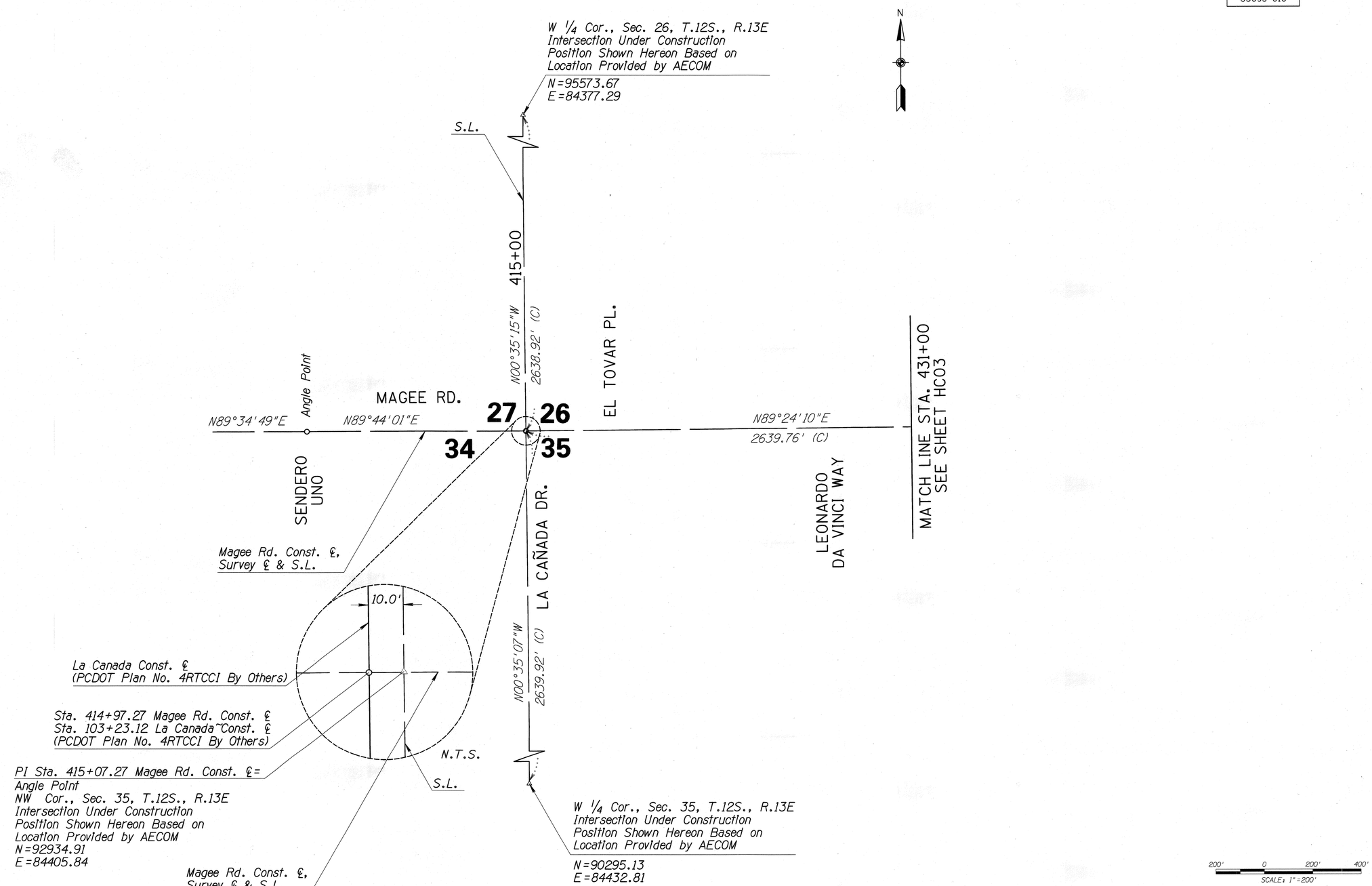

Priscilla S. Cornelio, P.E., Director

No.	Revision Description	Engineer	Date

		Date
Designed	MOC/DB/BGN	12/12
Drawn	MOC/DB/BGN	12/12
Checked	JDS	12/12
Proj. Engr.	AJH	12/12

Registered Professional Engineer (Civil) CERTIFICATE NO. 46219 ANTHONY J. HERRERA Date Signed 12/12/12 ARIZONA, U.S.A. Expires 12/31

eps group, Inc.
Engineers, Planners & Surveyors
8710 N. Thornydale Rd., Ste. 140, Tucson, Arizona 85742
Phone (520) 408-1400 Fax (520) 408-1403

Arizona Blue Stake
1-800-STAKE-IT
1-800-782-5348
Call at least two full business days before you dig

Pima County Department of Transportation

HORIZONTAL CONTROL SHEET
MAGEE RD.
LA CAÑADA DR. - ORACLE RD. (SR 77)
PROJECT NO. 4MRLCO

MAGEE RD. IMPROVEMENTS - LA CAÑADA DR. TO ORACLE RD. (SR 77) - PROJECT NO. 4MRLCO

Scale:	1"= 200' Horiz.	Sheet HC02 of HC04	Page 36 of 273

FILE NAME: S:\10-077 Magee Road\Civil\CADD\HC\4MRLCO_HC02.dgn DATE: 12/27/12 TIME: 5:22:50 PM aherrera

F.H.W.A. REGION	STATE	PROJECT NO.	SHEET NO.	TOTAL SHEETS	AS BUILT
9	ARIZ.	STP-PPM-0(209)D	37	273	

SS693 01C

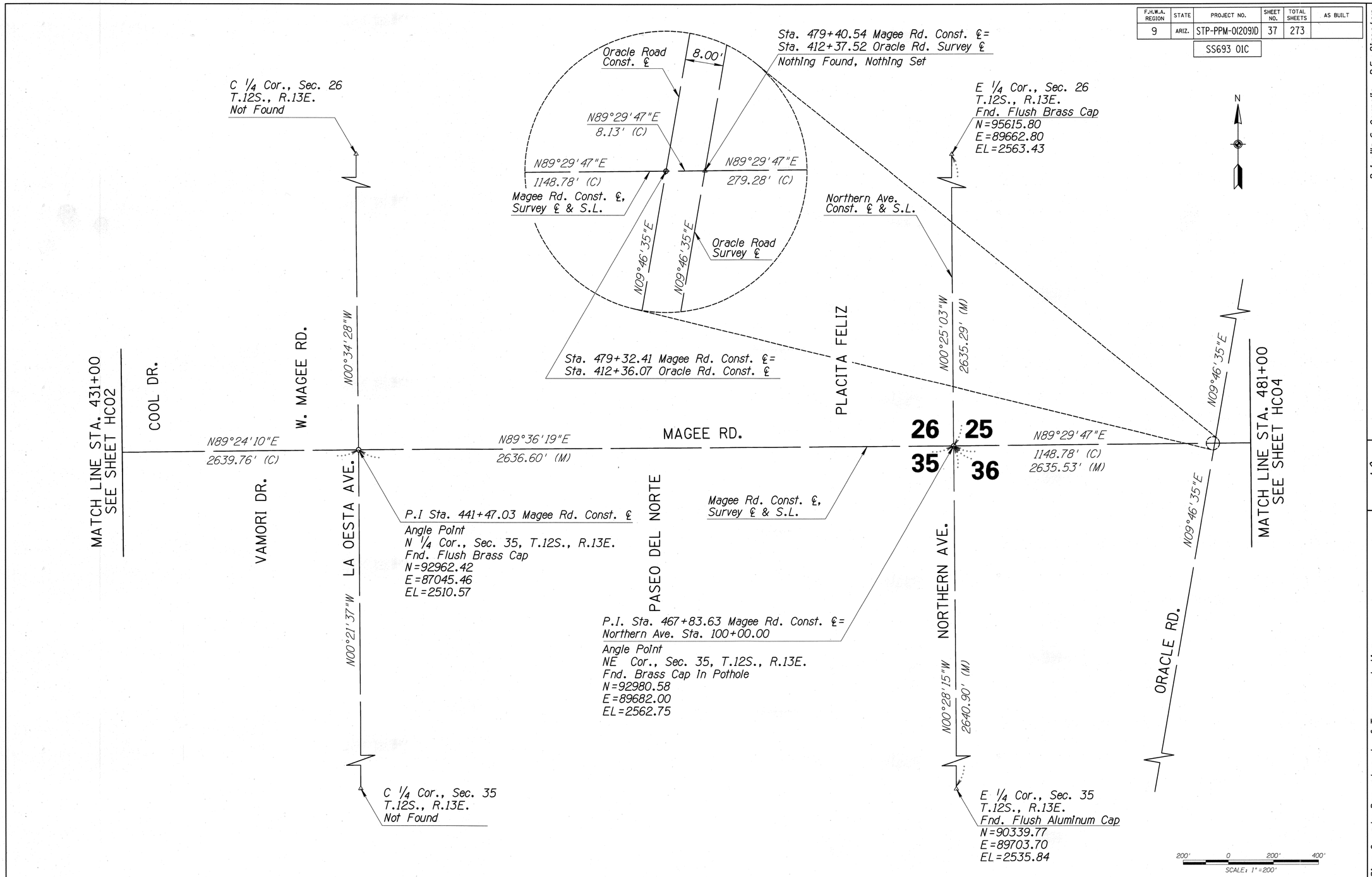

Priscilla S. Cornelio, P.E., Director

No.	Revision Description	Engineer	Date

		Date
Designed	MDC/JDB/BGN	12/12
Drawn	MDC/JDB/BGN	12/12
Checked	JDS	12/12
Proj. Engr.	AJH	12/12

Pima County Department of Transportation

HORIZONTAL CONTROL SHEET
MAGEE RD.
LA CAÑADA DR. - ORACLE RD. (SR 77)
PROJECT NO. 4MRLCO

eps group, Inc.
Engineers, Planners & Surveyors
8710 N. Thornydale Rd., Ste. 140, Tucson, Arizona 85742
Phone (520) 408-1400 Fax (520) 408-1403

Arizona Blue Stake
1-800-STAKE-IT
1-800-782-5348
Call two working days before you dig

MAGEE RD. IMPROVEMENTS - LA CAÑADA DR. TO ORACLE RD. (SR 77) - PROJECT NO. 4MRLCO

Scale: 1"= 200' Horiz. | Sheet HC03 of HC04 | Page 37 of 273

FILE NAME: s:\10-077 magee road\civil\cadd\hc\4MRLCO_HC03.dgn DATE: 12/27/12 TIME: 5:23:11 PM aherrera

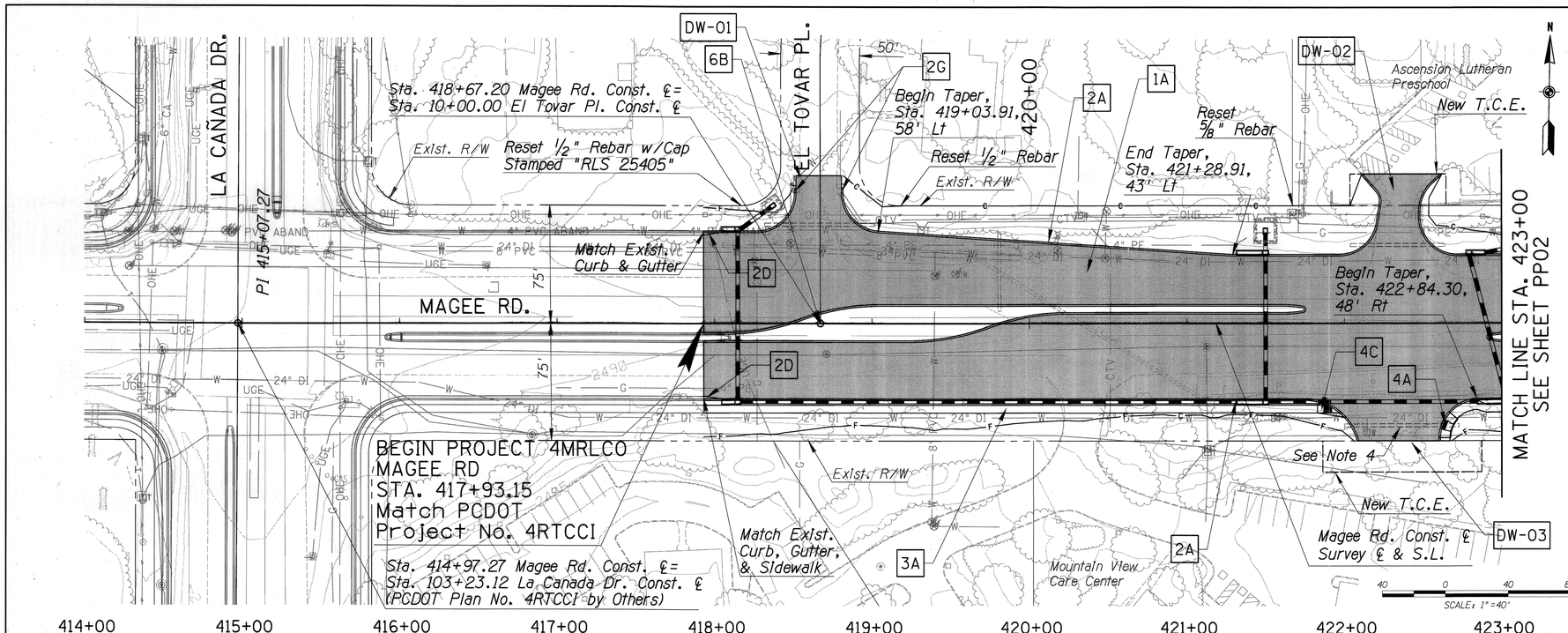

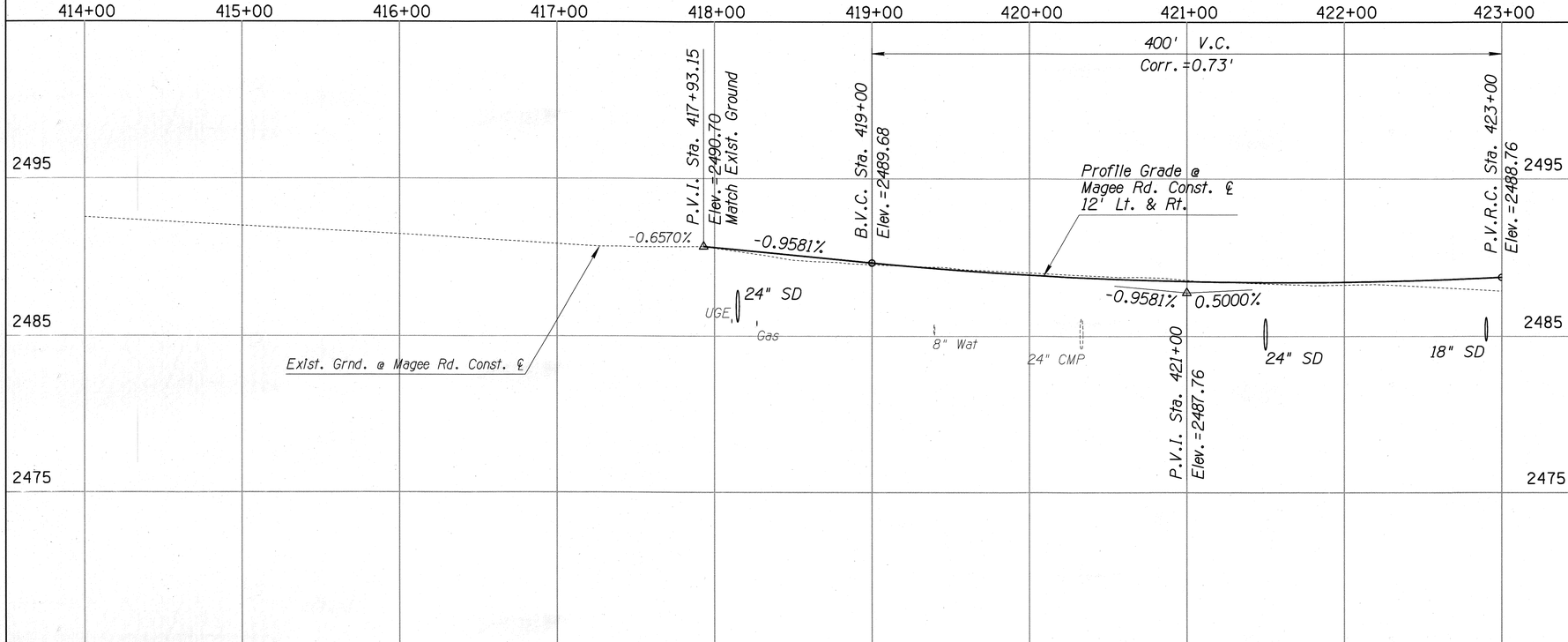

F.H.W.A. REGION	STATE	PROJECT NO.	SHEET NO.	TOTAL SHEETS	AS BUILT
9	ARIZ.	STP-PPM-0(209)D	39	273	

SS693 01C

ITEMS:

1 Pavement
- A Structural Section 1 Install 49,772 S.F.

2 Curb (See Curb Summary Sheet)
- A Concrete Curb See Dtl. RD08 Item #9080001 Install 1,832 L.F.
- D Concrete Curb Transition Concrete Curb to Concrete Curb and Gutter See Dtl. RD12 Item #9080112 Install 20 L.F.
- G Concrete Curb Terminal Section See Dtl. RD11 Item #9080090 Install 2 EA.

3 Concrete Sidewalk
- A Concrete Sidewalk PC/COT Dtl. 200 Item #9080201 Install 2,114 S.F.

4 Curb Access Ramps
- A Curb Access Ramp, Type 1 Single See Dtl. RD03 Item #9080280 Install 1 EA.
- C Curb Access Ramp, Type 3 Directional, See Dtl. RD05 Item #9080282 Install 1 EA.

6 Survey Monuments (See RS04)
- B Survey Monument Item #9090002 Install 1 EA.

DW-01 See Side Street & Driveway Plan & Profile Sheet DW01

DW-02 See Side Street & Driveway Plan & Profile Sheet DW01

DW-03 See Side Street & Driveway Plan & Profile Sheet DW02. Contractor shall coordinate with the Mountain View Care Center on the closure of the existing driveway and the construction of DW-03

NOTES:
1. See Staking Sheets ST01-ST02.
2. See Sheets SD01-SD16 for Drainage Information.
3. See Typical Sections Sheets TP02-TP07 for Pavement Cross Slope when Superelevation Is not shown.
4. See Sheet RS04 for Irrigation Sleeve and Control Wire Conduit Table.

Scale: 1" = 40' Horiz. 1" = 4' Vert. | Sheet PP01 of PP12

Priscilla S. Cornelio, P.E., Director

No.	Revision Description	Engineer	Date

		Date
Designed	MDC/JDB/BGN	12/12
Drawn	MDC/JDB/BGN	12/12
Checked	JDS	12/12
Proj. Engr.	A.H	12/12

Pima County Department of Transportation

ROADWAY PLAN & PROFILE SHEET
STA. 417+93.15 TO STA. 423+00
MAGEE RD.
LA CANADA DR. - ORACLE RD. (SR 77)
PROJECT NO. 4MRLCO

eps group, Inc.
Engineers, Planners & Surveyors
8710 N. Thornydale Rd., Ste. 140, Tucson, Arizona 85742
Phone (520) 408-1400 Fax (520) 408-1423

Arizona Blue Stake
1-800-STAKE-IT
1-800-782-5348
Call two working days before you dig

MAGEE RD. IMPROVEMENTS - LA CAÑADA DR. TO ORACLE RD. (SR 77) - PROJECT NO. 4MRLCO

FILE NAME: S:\10-077 Magee Road\Civil\CADD\PP\4MRLCO_PP01.dgn DATE: 12/27/12 TIME: 5:56:33 PM aherrera