LA CHOLLA BOULEVARD
RUTHRAUFF ROAD TO RIVER ROAD

Pima County Project No. 4LCITR

PIMA COUNTY DOT

Richard Elias, Chair
District 5

Ann Day
District 1

Ramón Valadez
District 2

Sharon Bronson
District 3

Raymond J. Carroll
District 4

This Project is Located in Supervisor District #1 & #3

General Project Description

Reconstruction of approximately one mile of La Cholla Boulevard between Ruthrauff Road and River Road into six-lane divided roadway. Improvements include: widening approximately four-tenths of a mile of Ruthrauff Road, storm drain, intersection lighting, public art, signing & striping, two new three-lane bridges crossing Rillito River, and landscaping. Other improvements include bike path, soil-cement, side streets, driveways and traffic signal modifications.

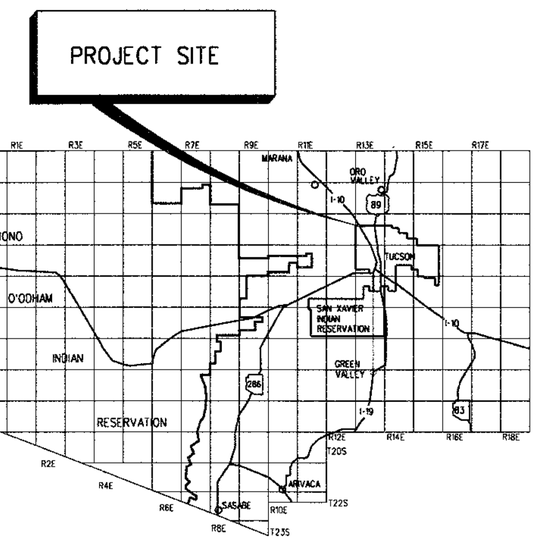

Location Map
NTS

Section 15 & 16
T-13-S, R-13-E,
G & S R M
Pima County, Arizona

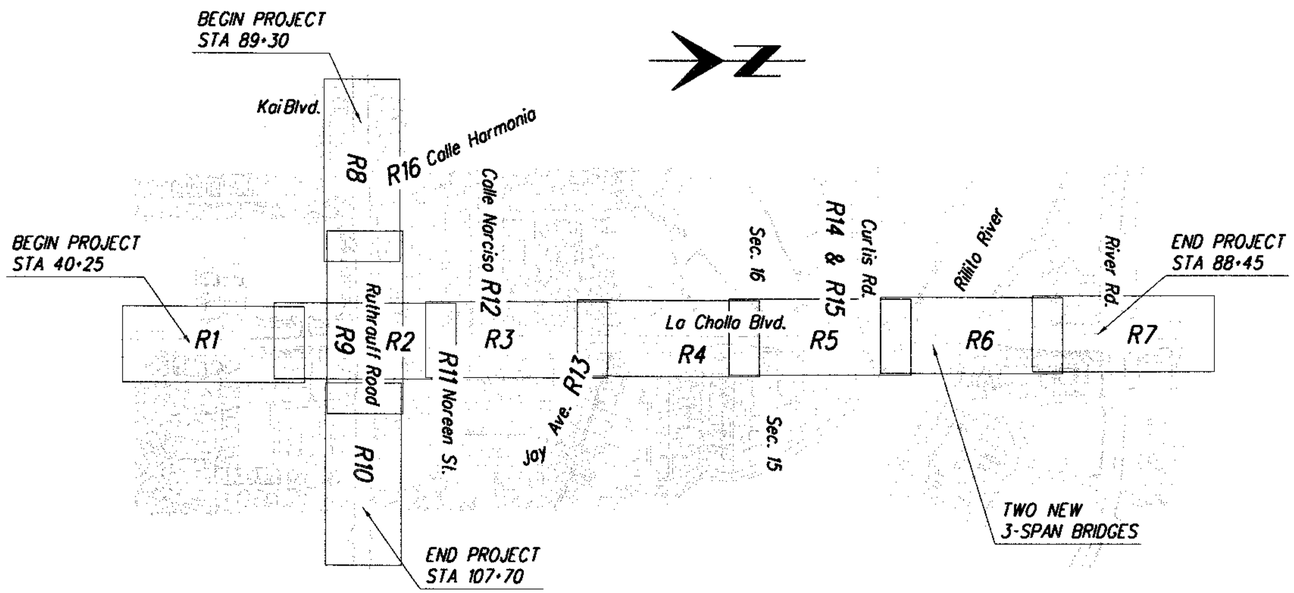

INDEX TO PLAN SHEETS
NTS

Arizona Blue Stake
1-800-STAKE-IT
1-800-782-5348
Call Two Working Days Before You Dig

PCRWRD PLAN NO. G-2008-088

Pima County
Department of Transportation
201 N. Stone Avenue Tucson, Arizona 85701
Priscilla S. Cornelio, P.E., Director

HDR
HDR Engineering, Inc.
5210 East Williams Circle, Suite 530
Tucson, AZ 85711-4459
(520) 584-3600

No.	Revisions	Engineer	Date

No.	As Built	Engineer	Date

Professional Engineer CERTIFICATE NO. 29368 TED W. BUELL ARIZONA U.S.A. Expires 09-30-2010

Reviewed by	Engineer	Date
Mgr. Design Engr.		
Mgr. Traffic Engr.		
Mgr. Field Engr.		
Mgr. RWRD	Carol A. Johnson	9.13.09

Approved: 9.10.2009
Priscilla S. Cornelio, P.E.

Project No. 4LCITR | Sheet No. CS1 of CS1 | Page No. 1 of 356

La Cholla Blvd.: Ruthrauff Rd. to River Rd. No. 4LCITR

012145
00000000000059914
Pima_County_Dept_of_Transportation\PCDOT-La_Cholla_Blvd-Ruthrauff\13.00_CAD\Construction_Documents\Civil\DOC_01.dgn

08\05\09 11:43:21 AM lbarela

SHEET INDEX

Page No.	Sheet No.	Description
1	CS1	Cover Sheet
2-4	GN1-GN3	General Notes Sheets
5-17	TS1-TS13	Roadway Typical Section Sheets
18-20	SUM1-SUM3	Summary Sheets
21-30	DEM1-DEM10	Demolition Plan Sheets
31-40	R1-R10	Roadway Plan & Profile Sheets
41-46	R11-R16	Side Street Plan & Profile Sheets
47-79	RD1-RD33	Roadway Detail Sheets
80-91	BP1-BP12	Bike Path Plan Sheets
92-98	H1-H7	Horizontal Control & Median Geometry Sheets
99-110	SP1-SP12	Staking Plan Sheets
111-125	SD1-SD15	Storm Drain Plan & Profile Sheets
126-138	DD1-DD13	Drainage Detail Sheets
139-150	W1-W12	Water Plan Sheets
151-157	T1-T7	Pavement Marking Sheets
158-175	T8-T25	Signing Plan Sheets
176-187	SL1-SL12	Traffic Signal & Lighting Plan Sheets
188-195	N1-N8	Native Plant Preservation Plan Sheets
196	RM1	Riparian Habitat Mitigation Plan Sheet
197-202	DP1-DP6	Demolition, Relocation, Preservation Plan Sheets
203-218	L1-L16	Landscape Plans, Schedule, & Detail Sheets
219-235	L17-L33	Irrigation Plans, Schedule, & Detail Sheets
236-237	L34-L35	River Park Entry Wall Detail Sheets
238-295	S1-S58	Bridge Sheets
296-300	SD 1.01-SD 1.03 SD 2.01, SD 3.02	ADOT Bridge Group SD Drawings
301-315	RW1-RW15	Right-of-Way Plan Sheets
316-343	XS1-XS28	La Cholla Boulevard Cross Section Sheets
344-353	XS29-XS38	Ruthrauff Road Cross Section Sheets
354-356	XS39-XS41	Curtis Road Cross Section Sheets

ABBREVIATIONS

ABUT.	Abutment
APP.	Approach
ARAC	Asphalt Rubber Asphaltic Concrete
b\b	Back to Back
BOTT.	Bottom
BPGL.	Bridge Profile Grade Line
BRG.	Bridge
Clr.	Clear
CONSTR.	Construction
Corr.	Correction
EB	East Bound
Ftg.	Footing
NB	North Bound
PCC	Point of Compound Curve
PCCP	Portland Cement Concrete Pavement
P.C.C.R.	Point of Compound Curb Return
P.R.C.R.	Point of Reverse Curb Return
PMDM	PC/COT Pavement Marking Design Manual (2008)
P.O.C.	Point on Curve
P.O.V.C.	Point on Vertical Curve
P.O.V.T.	Point on Vertical Tangent
PVC	Point of Vertical Curve
R.C.P.	Reinforced Concrete Pipe
Reinf.	Reinforcing
SB	South Bound
Shldr.	Shoulder
Temp.	Temporary
TEP	Tucson Electric Power
u.n.o.	Unless Noted Otherwise
V.D.P.	V.C.P. with D.I.P. Section
WB	West Bound
Transv.	Transverse

DESIGN DATA

	2007 ADT	2030 ADT
La Cholla Blvd.: Ruthrauff Rd. to River Rd.	28,400	44,000
Ruthrauff Rd.: At La Cholla Blvd. Intersection	28,200	37,000

Design Speed — 50 MPH - La Cholla North of Ruthrauff Rd.
40 MPH - La Cholla South of Ruthrauff Rd.
45 MPH - Ruthrauff Rd.

Design Vehicle — WB-50

LENGTH OF PROJECT

La Cholla Blvd.:
Sta. 40+25.00 to 88+45.00 — 4820 LF = 0.91 Miles

Ruthrauff Rd.:
Sta. 89+30.00 to 107+70.00 — 1840 LF = 0.35 Miles

Total = 6660 LF = 1.26 Miles

LEGEND

- Survey Panel Point
- Entry Monument Sign
- Pavement Removal
- Concrete Removal
- Valley Gutter Flow Line
- Median Crash Attentuator
- New Pavement
- New Concrete

Arizona Blue Stake
1-800-STAKE-IT
1-800-782-5348
Call Two Working Days Before You Dig

Priscilla S. Cornelio, P.E., Director

No.	Revision Description	Engineer	Date

		Date
Designed	L. Barela	July/2009
Drawn	A. Ledesma	July/2009
Checked	R. Brittain	July/2009
Proj. Engr.	L. Barela	Aug/2009

Registered Professional Engineer (Civil) — Luis Barela — 37267 — Arizona, U.S.A. — Expires 03-31-2011

HDR Engineering, Inc.
5210 East Williams Circle, Suite 530
Tucson, AZ 85711-4459
(520) 584-3600

Pima County Department of Transportation

LA CHOLLA BLVD.
RUTHRAUFF RD. TO RIVER RD.
GENERAL NOTES

Scales	Horiz. = NTS Vert. = NTS	Sheet	GN1 of GN3	Page	2 of 356

012145
00000000000059914
Pima_County_Dept_of_Transportation\PCDOT-La_Cholla_Blvd-Ruthrauff\13.00_CAD\Construction_Documents\Civil\00C-02.dgn

08\20\09 4:44:12 PM aledesma

Project # 4LCITR

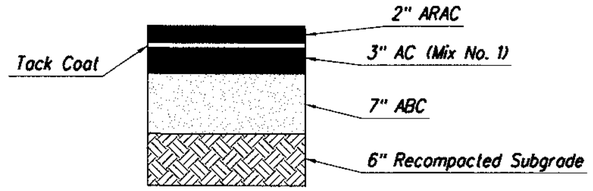

PAVEMENT STRUCTURE NO. 1

La Cholla Boulevard
Ruthrauff Road

NTS

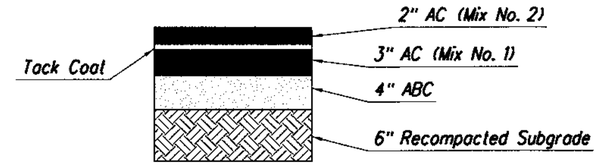

PAVEMENT STRUCTURE NO. 2

Curtis Road

NTS

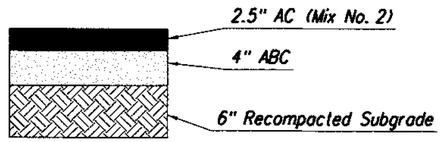

PAVEMENT STRUCTURE NO. 3

Noreen Street, Calle Narciso,
Jay Avenue, Calle Harmonia,
Commercial Driveways

NTS

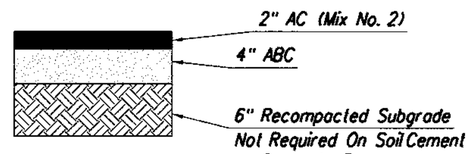

PAVEMENT STRUCTURE NO. 4

Residential Driveways, Bike Paths

NTS

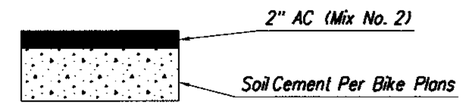

PAVEMENT STRUCTURE NO. 5

Bike Paths on Soil Cement

NTS

EARTHWORK QUANTITIES SUMMARY								
	La Cholla Blvd.		Ruthrauff Rd.		Curtis Rd.		Total	
Roadway Excavation (1)	9,795	C.Y.	3,855	C.Y.	380	C.Y.	14,030	C.Y.
10% Shrink (2)	700	C.Y.	33	C.Y.	38	C.Y.	771	C.Y.
Pipe Excavation	24,409	C.Y.	418	C.Y.	0	C.Y.	24,827	C.Y.
10% Shrink (3)	2,441	C.Y.	42	C.Y.	0	C.Y.	2,483	C.Y.
Structural Excavation	641	C.Y.	0	C.Y.	0	C.Y.	641	C.Y.
10% Shrink (3)	64	C.Y.	0	C.Y.	0	C.Y.	64	C.Y.
Embankment (4)	18,650	C.Y.	674	C.Y.	474	C.Y.	19,798	C.Y.
Trench Backfill North of Sta. 61+00	10,194	C.Y.	0	C.Y.	0	C.Y.	10,194	C.Y.
Haul Out	147	C.Y.	0	C.Y.	0	C.Y.	147	C.Y.
Haul In	0	C.Y.	0	C.Y.	147	C.Y.	147	C.Y.
10% Shrink	0	C.Y.	0	C.Y.	15	C.Y.	15	C.Y.
Waste	2,649	C.Y.	3,524	C.Y.	0	C.Y.	6,173	C.Y.
VOLUMES NOT INCLUDED IN EARTHWORK CALCULATIONS								
Removal of Bitmunious Pav't (5)	4,351	C.Y.	1,638	C.Y.	498	C.Y.	6,487	C.Y.
Pipe Bedding	3.529	C.Y.	88	C.Y.	0	C.Y.	3,617	C.Y.
Shading Material	3,945	C.Y.	158	C.Y.	0	C.Y.	4,102	C.Y.
Trench Backfill South of Sta. 61+00	1,492	C.Y.	110	C.Y.	0	C.Y.	1,602	C.Y.
Drilled Shaft Excavation	1,850	C.Y.	0	C.Y.	0	C.Y.	1,850	C.Y.
Structure Backfill	340	C.Y.	0	C.Y.	0	C.Y.	340	C.Y.

Note:

(1) Includes Side Street Excavation, Driveway Excavation, Channel Excavation, and Bike Path Excavation.

(2) Roadway Excavation Shrink equals the value of [sum of Embankment and Trench Backfill divided by (1 minus Shrink percent)] less (Embankment plus Trench Backfill) less Pipe Excavation Shrink less Structural Excavation Shrink.

(3) Shrink equals respective excavation multiplied by shrink percent.

(4) Includes Roadway, Side Street, and Driveway Embankments.

(5) Existing Bituminous Pavement Thicknesses Are:
La Cholla Blvd. And Curtis Rd. = 5.5"
Ruthrauff Rd. = 5"
Side Streets, Bike Paths, and Driveways = 2"

For the purposes of earthwork calculations the following assumptions were utilized:

The material from drilled shaft excavations are not suitable for placing in roadway embankments and trench backfill due to slurry contamination.

The material on the project will not be suitable for Pipe Bedding, Shading Material, and Structure Backfill.

The material on the project is suitable for Trench Backfill except at the following locations:
La Cholla Boulevard Sta. 40+25 to Sta 61+00
Ruthrauff Road Sta. 89+30 to Sta. 107+70

The material on the project is suitable for Roadway Embankment.

The material from the removal of bituminous pavement is not used in Roadway Embankment, and will become the property of the contractor.

Volumes for the removal of bituminous pavement were taken out of the existing ground DTM prior to calculating the excavation and embankment quantities.

No Over Excavation is required for this project.

Arizona Blue Stake
1-800-STAKE-IT
1-800-782-5348
Call Two Working Days Before You Dig

Scales	Horiz. = NTS Vert. = NTS	Sheet	GN2 of GN3	Page	3 of 356

Pima County Department of Transportation
Priscilla S. Cornelio, P.E., Director

LA CHOLLA BLVD.
RUTHRAUFF RD. TO RIVER RD.
GENERAL NOTES

No.	Revision Description	Engineer	Date

		Date
Designed	L. Borelo	July 2009
Drawn	A. Ledesma	July 2009
Checked	R. Brittain	July 2009
Proj. Engr.	L. Borelo	Aug. 2009

Registered Professional Engineer (Civil)
Luis Borelo
37287
Date Signed 9-24-2009
Arizona, U.S.A.
Expires 03-31-2011

HDR Engineering, Inc.
5210 East Williams Circle, Suite 530
Tucson, AZ 85711-4459
(520) 594-3600

012145
0000000000059914
Pima_County_Dept_of_Transportation\PCDOT-La_Cholla_Blvd-Ruthrauff\13.00_CAD\Construction_Documents\Civil\00C-03.dgn

08\20\09 4:44:17 PM aledesma

Project = 4LCITR

GENERAL NOTES

1. A.) Horizontal control is based upon Pima County geodetic controlpoints AL13, AN13, and AJ11. The project surface coordinates were established by applying a combined grid factor of 1.000118934 to grid values at geodetic controlpoint AL13. To achieve grid values divide the herein contained project coordinates by the combined grid factor. Unless otherwise stated allnorthing and easting values provided in this plan set are surface coordinates.

   B.) HDR based the vertical controlon City of Tucson bench mark documented in field book 1989-B-1, Pg. 67 & also known as Pima County geodetic control point AL-13. Point being a found 2" BCSM punch only located at the intersection of La Cholla Blvd. & Curtis Rd. Elevation - 2265.62 (NAVD 88)

2. All stationing is along construction centerline unless noted otherwise.

3. All construction shallconform to 2003 Pima County Standard Specifications and Details for Public Improvements except as modified in the contract specifications or plans. Referenced ADOT standards are per the 1992 Structures Section Standard Drawings, 2007 Construction Standard Drawings, & 2002 Signing and Marking Standard Drawings with their current updated revisions.

4. Utility locations shown on the plans were compiled based on the best information available to the Department. Utility locations are not intended to be exact or complete. Prior to commencing construction, the contractor shallverify the locations of allutilities with the appropriate organization. Contact " Blue Stake" at (800-782-5348) two (2) full working days prior to beginning construction.

5. Existing overhead electric, telephone and cable T.V. utilities and underground electric, gas, T.V. and telephone installations willbe moved by others.

6. All water valve boxes and covers shallbe adjusted to finished pavement grade.

   Adjustment shallconform with Tucson Water Section of Pima County/City of Tucson standard details W-300 & W-305 with attention to water service notes W-309. This work shallbe considered incidentalto the other items of work, except when the bidding schedule contains specific items on a unit basis.

7. Right-of-way encroachments shallbe removed only by order of Pima County, unless otherwise noted.

8. Survey monuments willbe furnished and placed by the contractor per Std. Dtl. 103 with frame and cover.

9. Changes in location or length of depressed curbs may be made by the Engineer.

10. Radii are measured to front face of curb per PCDOT standards.

11. Construction zone traffic controlshallconform to the requirements of the "Manualon Uniform Traffic ControlDevices", U.S. Department of Transportation, Federal Highway Administration, 2003 edition with current updated revisions, and the specialprovisions.

12. Removal of allcacti and native plants shallbe in accordance with the provisions of the "Arizona Native Plant Law", A.R.S., Chapter 7, and The Pima County Native Plant Preservation Ordinance.

13. Soils information willbe made available to prospective bidders upon request of the Pima County Department of Transportation. Soils information so provided shallbe for information purposes only and is not to be considered a part of the contract documents. This information was developed as accurately as possible by the methods utilized. Pima County accepts no responsibility for any conditions encountered which vary from information provided.

14. Contractor shallobtain allpermits required by allgovernmentalagencies unless otherwise noted. However, since this project has been prepared in accordance with Pima County floodplain and grading ordinance requirements, the contractor willnot be required to apply for either of these permits. For work beyond the scope of these project limits, plans or specifications, the contractor shallobtain a separate floodplain and/or grading permit prior to commencing such work.

15. Contractor shallcomply with allapplicable occupationalsafety and health administration regulations.

16. The permanent traffic control signing shallbe furnished and installed by the contractor. Existing pavement markings shallbe obliterated as directed by the Engineer, in accordance with County Standards. Permanent pavement markings shallbe installed by the contractor.

17. Remove and relocate, as directed by the Engineer, allmailboxes, fences, gates, signs, posts, pipes, etc., within the right-of-way and construction easement areas. The cost of this work shallbe considered as incidentalto the other items of work, except when the bidding schedule contains specific items on a unit basis.

18. Allsidewalk and curb which are new to existing connections shalluse PC/COT Std. Dtl. 203 & 211 respectively, and the work done for this willbe incidentalto that particular item.

SANITARY SEWER NOTES

1. Immediately report any release of sewage, and/or any damage to, or the dropping of debris into, the public sanitary sewage conveyance system to either PCRWRD Field Engineering (740-2651) or PCRWRD Field Operations (443-6500). On weekends, holidays, or between 5:00 PM and 8:00 AM, immediately callPima County Sheriff's Communication Center at 295-4595 or 741-4900 and request a PCRWRD representative to be dispatched to the site. Take immediate action to prevent or contain the sanitary sewage overflow (SSO) from the sewer system. The contractor shallbe responsible for allcosts to repair the system, for allexpenses to mitigate the release and to disinfect the release areas, and for any regulatory penalties levied on PCRWRD because the SSO entered a naturalor constructed storm water drainage system. The contractor shallrepair alldamage as directed and approved by PCRWRD.

2. Engineering Directive, ENG2006-09, applies to any project that requires trenching within 6' horizontalor 2' verticalof an existing public sewer main. It is the responsibility of the contractor to (A) Identify and include allflow management costs in the construction bid, and (B) Provide a flow management plan 30 days prior to the pre-construction meeting with wastewater field engineering preceding any work that may impact a live sewer. Refer to detail WWM A-5 for flow management plan requirements. CallRegional Wastewater Field Engineering at 740-2651 for allquestions regarding the preparation of flow management plans.

3. It is the contractors responsibility to adjust or reconstruct allsanitary sewer manhole structures to finished grade. Allring and cover adjustments are to be in accordance with city of Tucson/Pima County standard details for public improvements WWM 304, WWM 305 or WWM 306 (as applicable) and WWM 307. While adjusting the manhole to finished grade, it is the contractor's responsibility to ensure that rings and covers are cleaned of any and allattached materials (asphalt, concrete, etc.) and ensure that any vent holes are open and clear of obstructions. If the frame and cover are damaged and cannot be completely cleaned, then a new frame and cover is to be put into place, and cost associated with these actions are the responsibility of the contractor. Refer to details WWM 213.0-214.3 for requirements for rings and covers.

4. House or business connection sewers (HCS or BCS) are not part of the public sanitary sewer conveyance system. Private connection sewers constructed prior to January 2006 are not required to be blue staked. Any HCS/BCS encountered during construction shallbe protected, repaired, or rerouted, as the situation dictates (COT/PC SD WWM 404), at no expense to the property owner or the Pima County Regional Wastewater Reclamation Department.

5. All design standards, materials and workmanship for public sanitary sewers are to be in accordance with the latest edition of the Pima County Regional Wastewater Reclamation Department's (PCRWRD) Manualof Engineering Standards and Procedures, and the Pima County/City of Tucson Standard Details and Specifications for public improvements. Said manuals are on file at the Pima County Regional Wastewater Reclamation Department office: 201 N. Stone Avenue, 8th Floor.

6. City of Tucson/Pima County Standard Detail WWM 106 applies to this project.

Arizona Blue Stake
1-800-STAKE-IT
1-800-782-5348
Call Two Working Days Before You Dig

Priscilla S. Cornelio, P.E., Director

No.	Revision Description	Engineer	Date

		Date
Designed	L. Barela	July/2009
Drawn	A. Ledesma	July/2009
Checked	R. Britton	July/2009
Proj. Engr.	L. Barela	Aug/2009

37267 L.E. BARELA
Date Signed 8-31-09
ARIZONA, U.S.A.
Expires 03-31-2011

HDR Engineering, Inc.
5210 East Williams Circle, Suite 530
Tucson, AZ 85711-4459
(520) 584-3600

Pima County Department of Transportation

LA CHOLLA BLVD.
RUTHRAUFF RD. TO RIVER RD.
GENERAL NOTES

Scales	Horiz. - NTS Vert. - NTS	Sheet	GN3 of GN3	Page	4 of 356

Project • 4LCITR

012145
0000000000059914
Pima_County_Dept_of_Transportation\PCDOT-La_Cholla_Blvd-Ruthrauff\13.00_CAD\Construction_Documents\Civil\DOC-04.dgn

08\20\09 4:44:22 PM aledesma

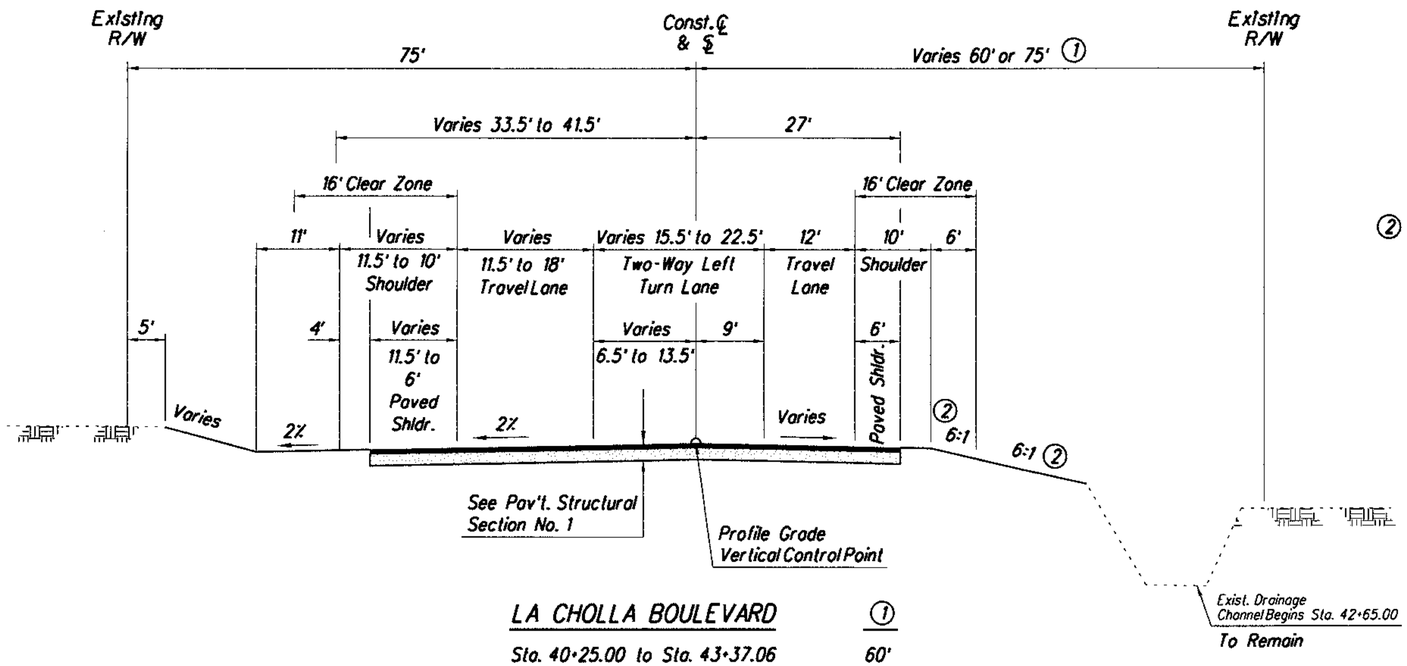

② Varies at existing drainage channel to catch top of concrete slope.

LA CHOLLA BOULEVARD ①

Sta. 40+25.00 to Sta. 43+37.06	60'
Sta. 43+37.06 to Sta. 43+75.00	75'

③ Berm and ditch end at Sta. 45+15.00. Grade to drain to catch basin.

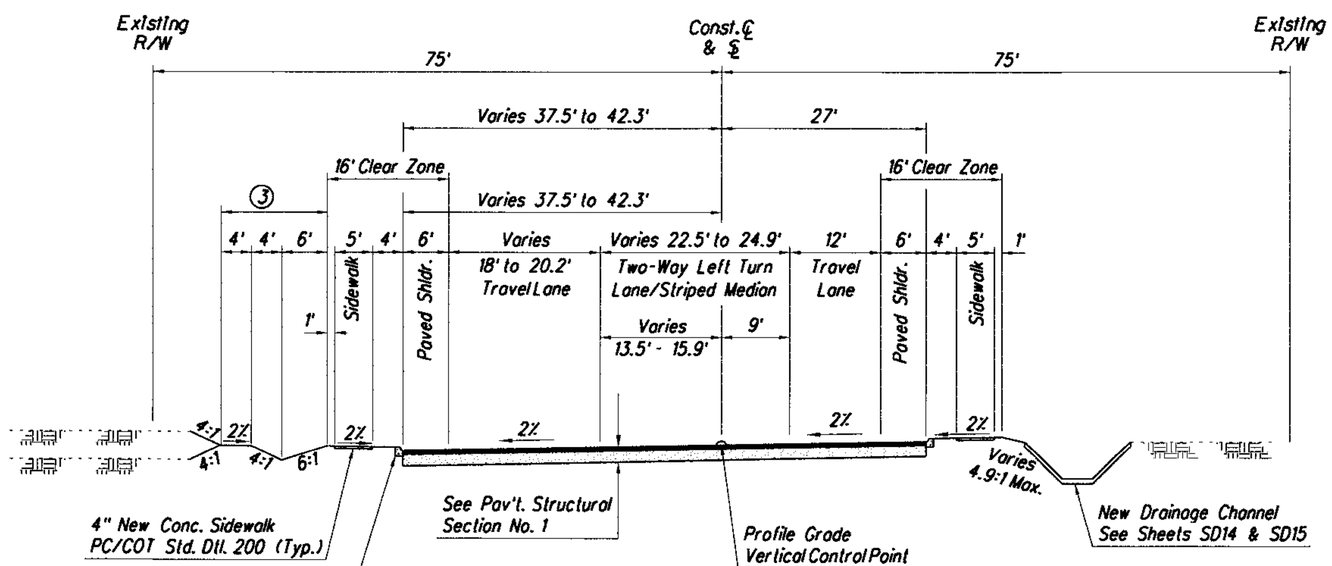

Note:
See Plan Sheets R11 to R16 for side street typical sections.

Roadway cross slope varies see superelevation diagram on profiles in Plan Sheets R1 to R16.

LA CHOLLA BOULEVARD

Sta. 43+75.00 to Sta. 44+95.00

10 0 10 20

Arizona Blue Stake
1-800-STAKE-IT
1-800-782-5348
Call Two Working Days Before You Dig

Scales	Horiz. 1"=10' Vert. 1"=10'	Sheet	TS1 of TS13	Page	5 of 356

Project # 4LCITR

Pima County Department of Transportation
Priscilla S. Cornelio, P.E., Director

LA CHOLLA BL VD.
RUTHRAUFF RD. TO RIVER RD.
ROADWAY TYPICAL SECTIONS
FOR LA CHOLLA BL VD.

HDR Engineering, Inc.
5210 East Williams Circle, Suite 530
Tucson, AZ 85711-4459
(520) 584-3600

Expires 03-31-2011

Designed	L. Borela	July/2009
Drawn	J. Amos, A. Ledesmo	July/2009
Checked	R. Britton	July/2009
Proj. Engr.	L. Borela	Aug/2009

No.	Revision Description	Engineer	Date

012145
0000000000059914
Pima_County_Dept_of_Transportation\PCDOT-Lo_Cholla_Blvd-Ruthrauff\13.00_CAD\Construction_Documents\Civil\15C-01.dgn

08\20\09 4:44:28 PM oledesmo

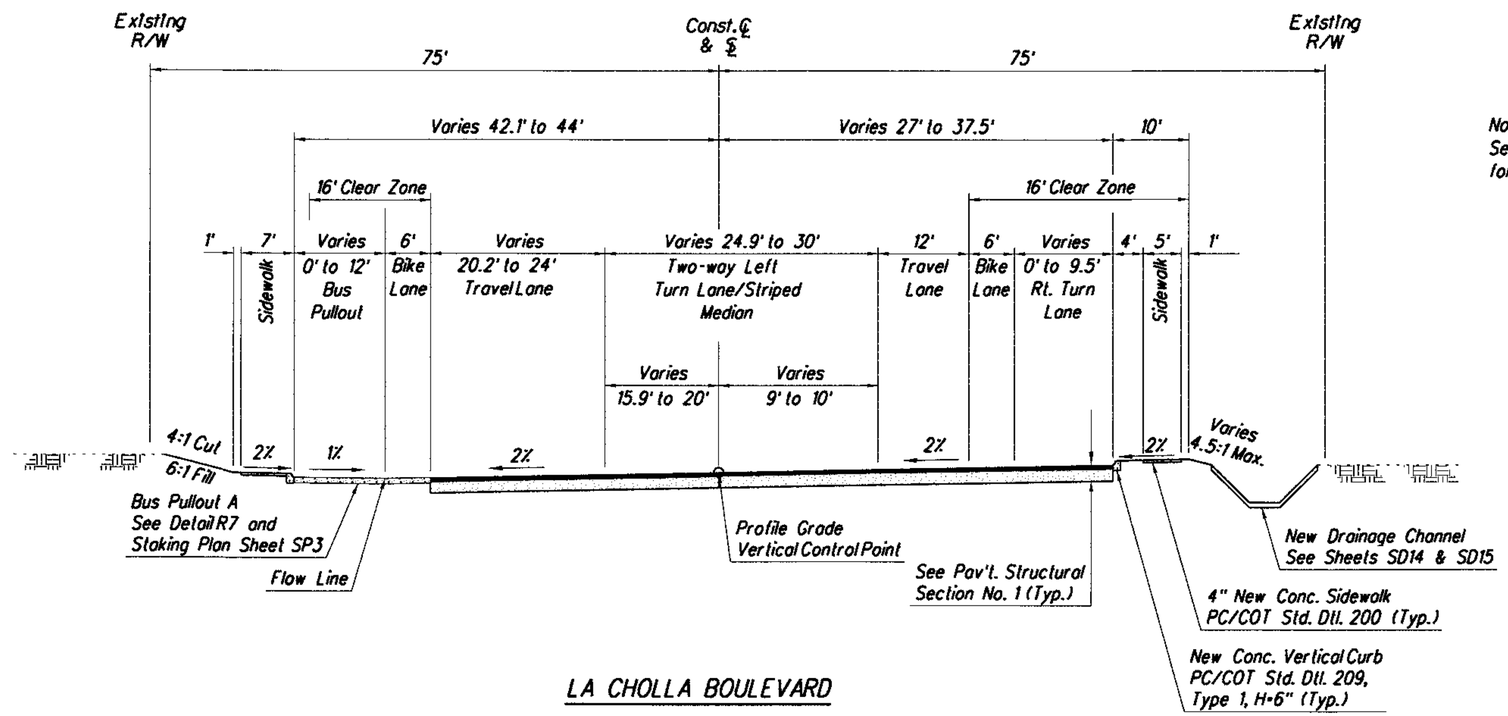

LA CHOLLA BOULEVARD

Sta. 44+95.00 to Sta. 47+00.00

Note:
See Plan Sheets R11 to R16 for side street typical sections.

10 0 10 20

Arizona Blue Stake
1-800-STAKE-IT
1-800-782-5348
Call Two Working Days Before You Dig

Scales	Horiz. 1"=10' Vert. 1"=10'	Sheet	TS2 of TS13	Page	6 of 356

Project # 4LCITR

Pima County Department of Transportation

Priscilla S. Cornelio, P.E., Director

No.	Revision Description	Engineer	Date

		Date
Designed	L. Barela	July/2009
Drawn	A. Ledesma	July/2009
Checked	R. Britton	July/2009
Proj. Engr.	L. Barela	Aug/2009

Expires 03-31-2011

HDR
HDR Engineering, Inc.
5210 East Williams Circle, Suite 530
Tucson, AZ 85711-4459
(520) 584-3600

LA CHOLLA BLVD.
RUTHRAUFF RD. TO RIVER RD.
ROADWAY TYPICAL SECTIONS
FOR LA CHOLLA BLVD.

012145
000000000059914
Pima_County_Dept_of_Transportation\PC001-La_Cholla_Blvd-Ruthrauff\13.00_CAD\Construction_Documents\Civil\15C-02.dgn

08\20\09 4:44:32 PM aledesma

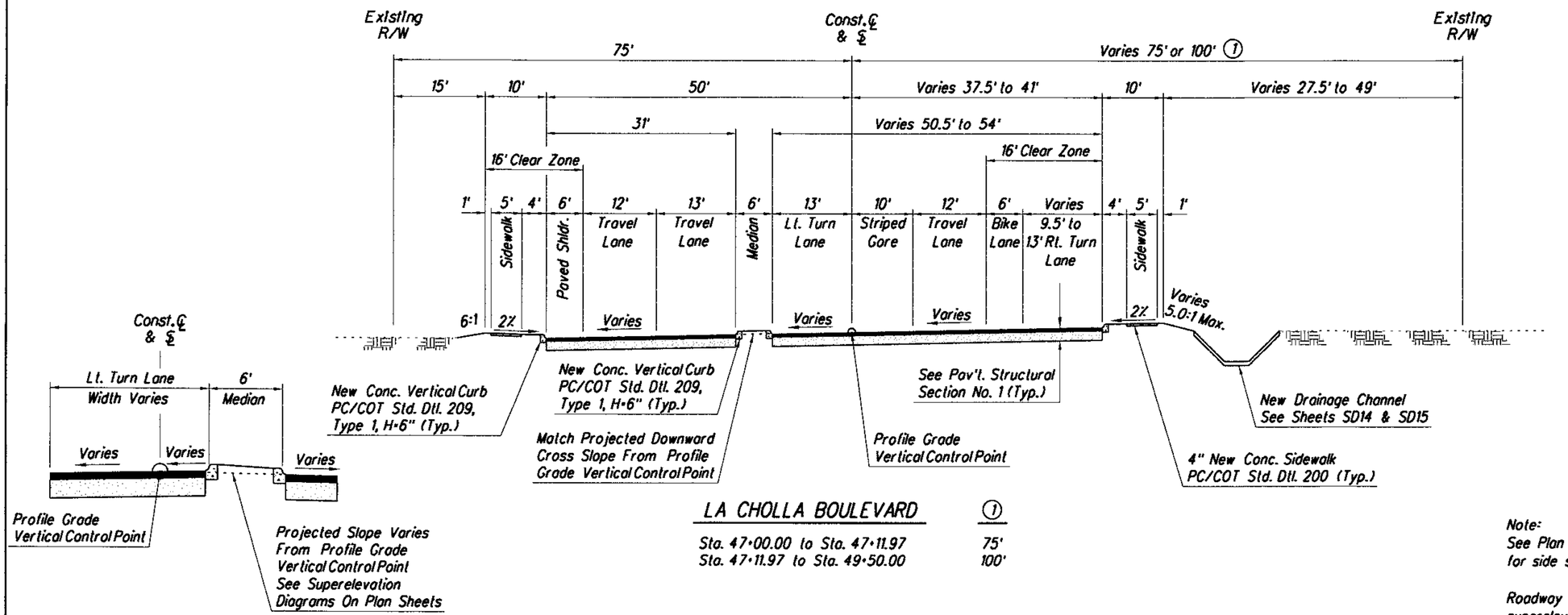

LA CHOLLA BOULEVARD (1)

Sta. 47+00.00 to Sta. 47+11.97	75'
Sta. 47+11.97 to Sta. 49+50.00	100'

Note:
See Plan Sheets R11 to R16 for side street typical sections.

Roadway cross slope varies see superelevation diagram on profiles in Plan Sheets R1 to R16.

TYPICAL DETAIL: SB LEFT TURN LANE WITH UNEVEN MEDIAN

N.T.S.

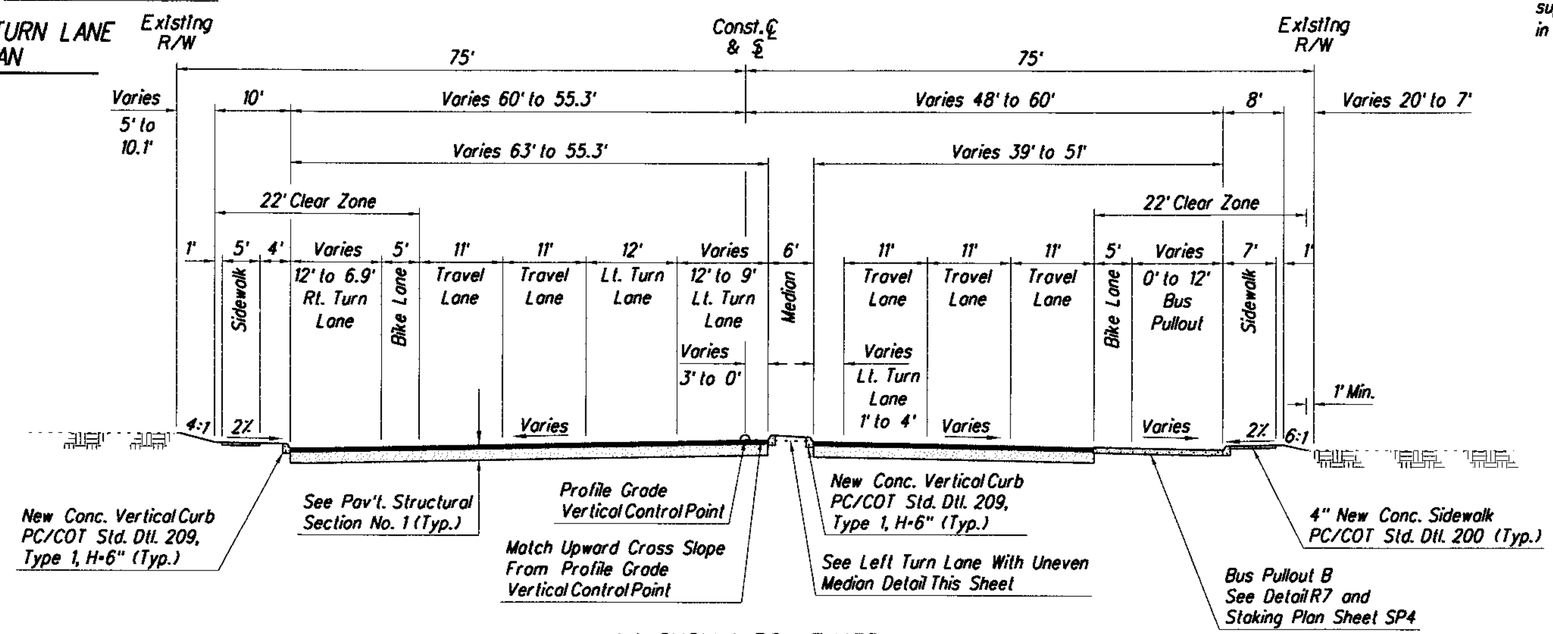

LA CHOLLA BOULEVARD

Sta. 50+50.00 to Sta. 53+85.48

10 0 10 20

Arizona Blue Stake
1-800-STAKE-IT
1-800-782-5348
Call Two Working Days Before You Dig

Scales	Horiz. 1"=10' Vert. 1"=10'	Sheet	TS3 of TS13	Page	7 of 356

Pima County Department of Transportation

Priscilla S. Cornelio, P.E., Director

No.	Revision Description	Engineer	Date

		Date
Designed	L. Barela	July 2009
Drawn	A. Ledesma	July 2009
Checked	R. Britton	July 2009
Proj. Engr.	L. Barela	Aug 2009

Expires 03-31-2011

HDR Engineering, Inc.
5210 East Williams Circle, Suite 530
Tucson, AZ 85711-4459
(520) 594-3600

LA CHOLLA BLVD.
RUTHRAUFF RD. TO RIVER RD.
ROADWAY TYPICAL SECTIONS
FOR LA CHOLLA BLVD.

Project • 4LCITR

012145
0000000005914
Pima_County_Dept_of_Transportation\PCDOT-t.o._Cholla_Blvd-Ruthrauf\13.00_CAD\Construction_Documents\Civil\5C-03.dgn

08\20\09 4:44:36 PM aledesma

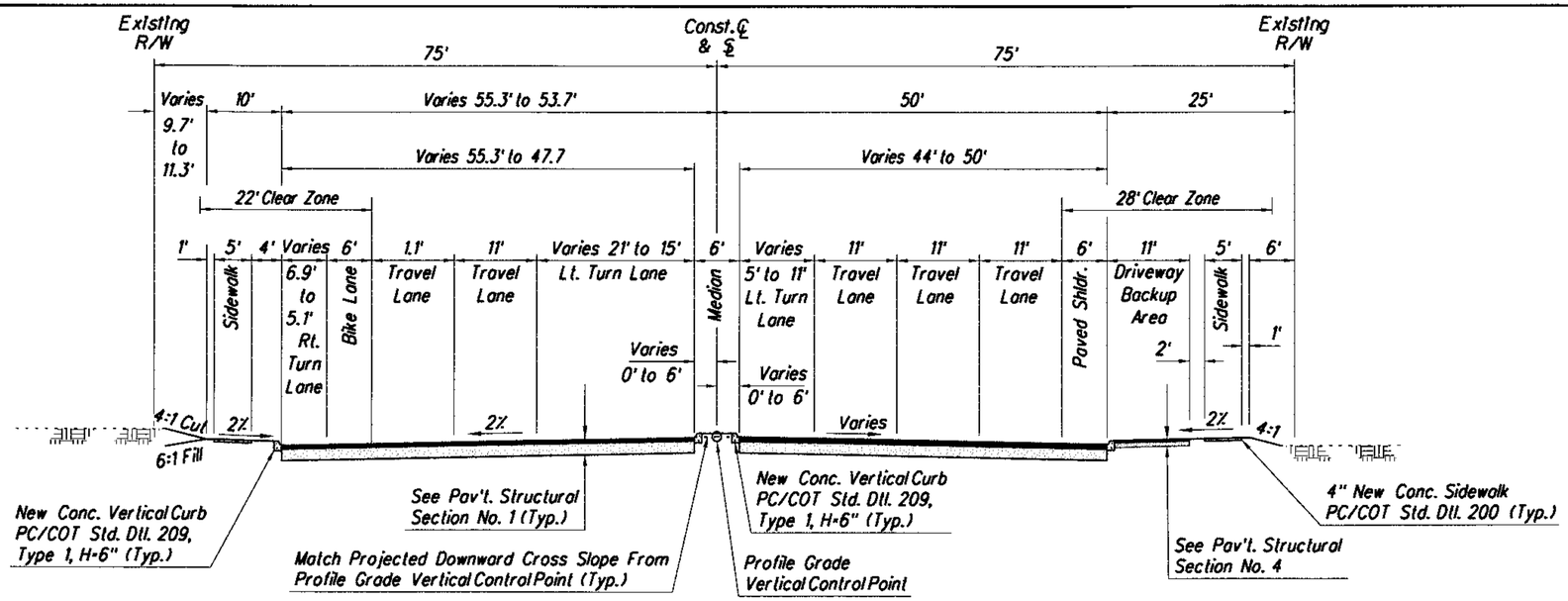

LA CHOLLA BOULEVARD

Sta. 53+85.48 to Sta. 54+14.52

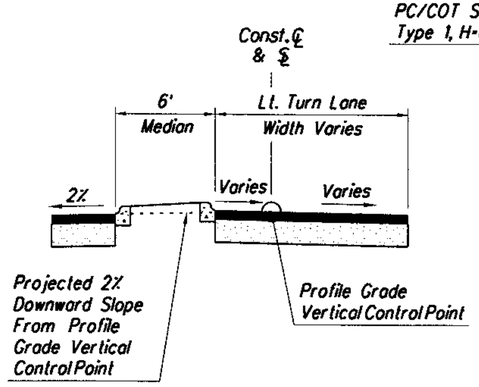

TYPICAL DETAIL: NB LEFT TURN LANE WITH UNEVEN MEDIAN

N.T.S.

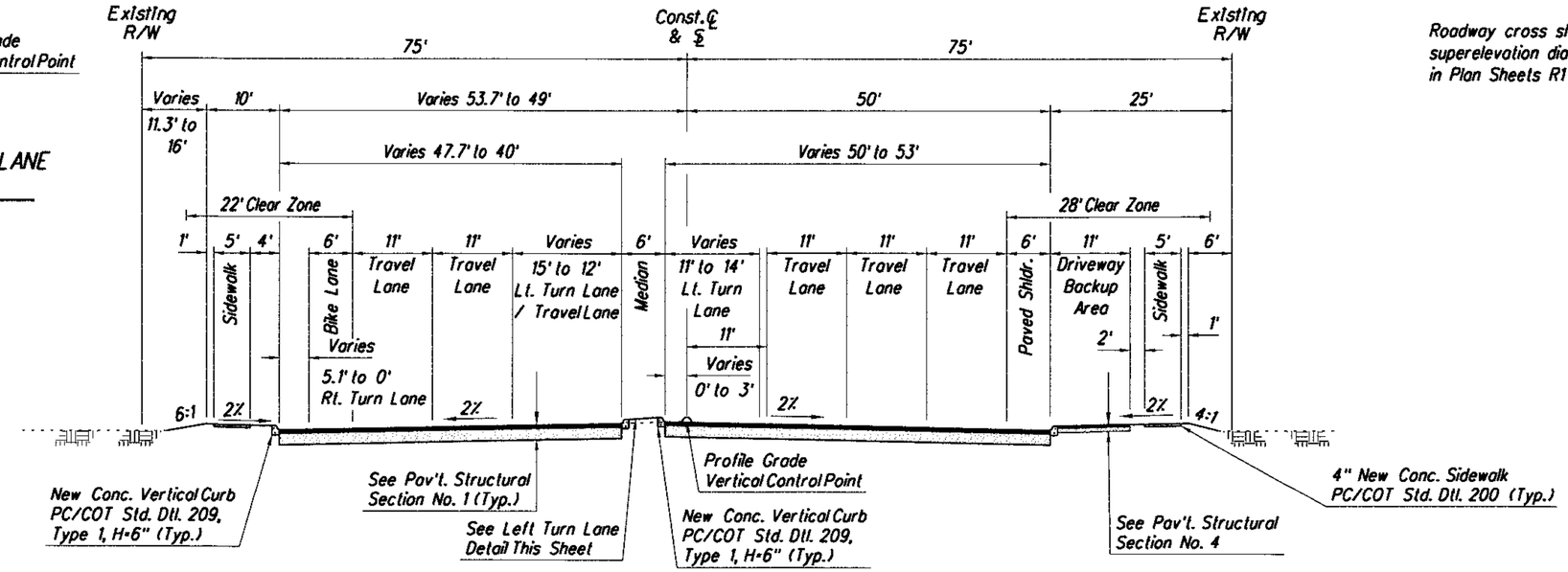

LA CHOLLA BOULEVARD

Sta. 54+14.52 to Sta. 56+30.00

Note:
See Plan Sheets R11 to R16 for side street typical sections.

Roadway cross slope varies see superelevation diagram on profiles in Plan Sheets R1 to R16.

10 0 10 20

Arizona Blue Stake
1-800-STAKE-IT
1-800-782-5348
Call Two Working Days Before You Dig

Scales	Horiz. 1"=10' Verl. 1"=10'	Sheet	TS4 of TS13	Page	8 of 356

Project • 4LCITR

Pima County Department of Transportation
Priscilla S. Cornelio, P.E., Director

LA CHOLLA BL VD.
RUTHRAUFF RD. TO RIVER RD.
ROADWAY TYPICAL SECTIONS
FOR LA CHOLLA BL VD.

HDR Engineering, Inc.
5210 East Williams Circle, Suite 530
Tucson, AZ 85711-4459
(520) 584-3600

Expires 03-31-2011

Designed	L. Barela	Date July/2009
Drawn	J. Arias	July/2009
Checked	R. Britton	July/2009
Proj. Engr.	L. Barela	Aug/2009

No.	Revision Description	Engineer	Date

012145
0000000000059914
Pima_County_Dept_of_Transportation\PC001-La_Cholla_Blvd-Ruthrauf\13.00_CAD\Construction_Documents\Civil\15C-04.dgn

08\20\09 4:44:40 PM oledesma

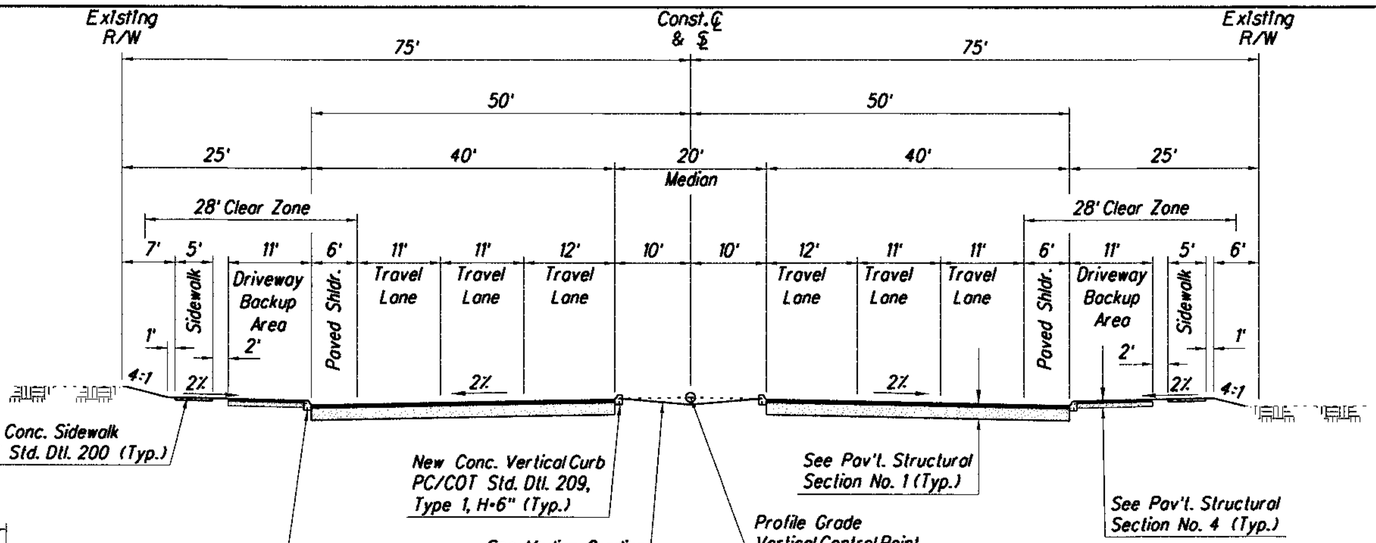

LA CHOLLA BOULEVARD

Sta. 56+30.00 to Sta. 59+50.00

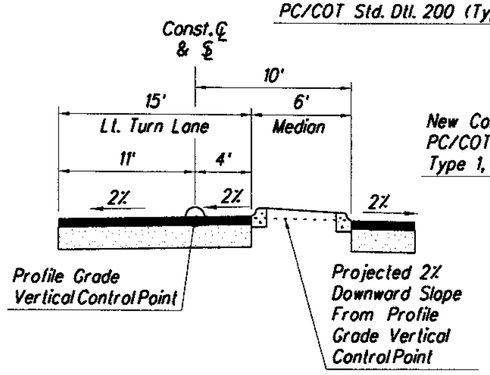

TYPICAL DETAIL: SB LEFT TURN LANE WITH UNEVEN MEDIAN

N.T.S.

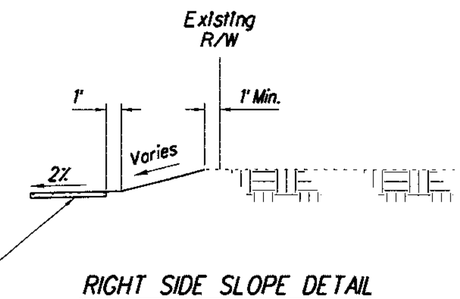

RIGHT SIDE SLOPE DETAIL

Sta. 61+70.00 to Sta. 69+25.00

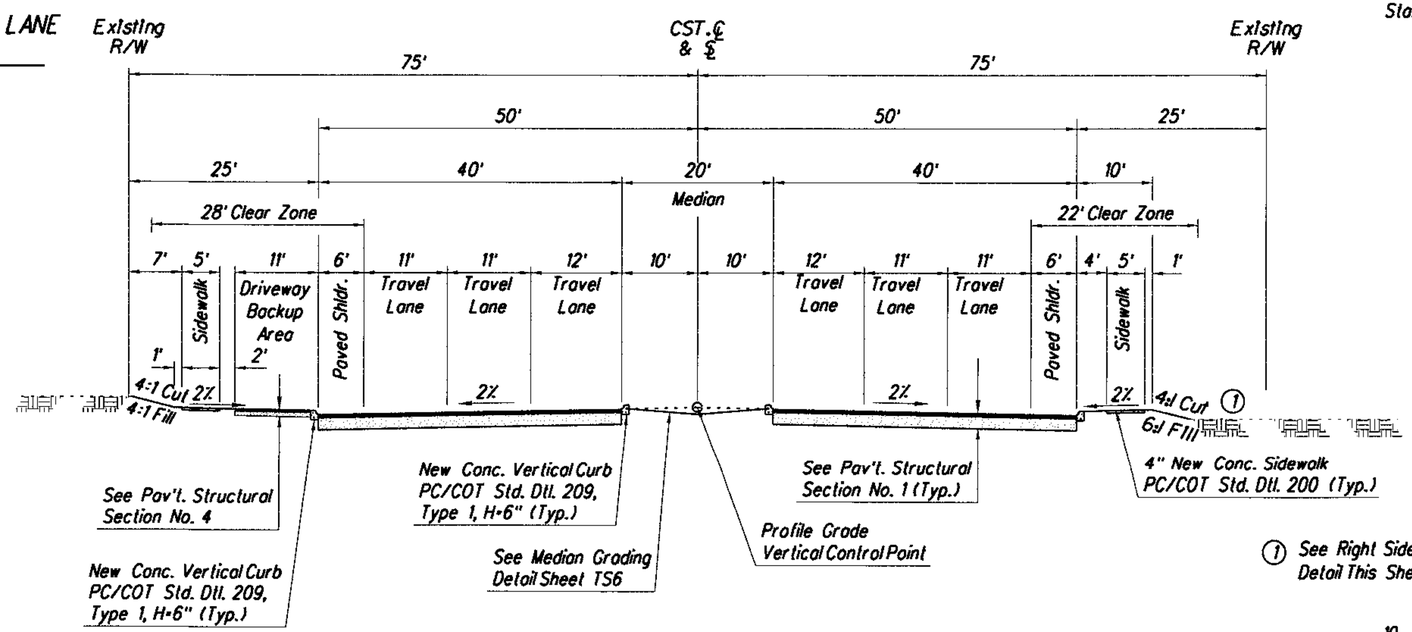

Note:
See Plan Sheets R11 to R16 for side street typical sections.

1 See Right Side Slope Detail This Sheet

LA CHOLLA BOULEVARD

Sta. 59+50.00 to Sta. 63+45.00

10 0 10 20

Arizona Blue Stake
1-800-STAKE-IT
1-800-782-5348
Call Two Working Days Before You Dig

Scales	Horiz. 1"=10' Vert. 1"=10'	Sheet TS5 of TS13	Page 9 of 356

Project • 4LCITR

Pima County Department of Transportation

Priscilla S. Cornelio, P.E., Director

No.	Revision Description	Engineer	Date

		Date
Designed	L. Barela	July 2009
Drawn	A. Lozasmo	July 2009
Checked	R. Britton	July 2009
Proj. Engr.	L. Barela	Aug 2009

Registered Professional Engineer (Civil) 37267 L. BARELA Date Signed 8-24-09 Arizona, U.S.A.
Expires 03-31-2011

HDR Engineering, Inc.
5210 East Williams Circle, Suite 530
Tucson, AZ 85711-4459
(520) 584-3600

LA CHOLLA BLVD.
RUTHRAUFF RD. TO RIVER RD.
ROADWAY TYPICAL SECTIONS
FOR LA CHOLLA BLVD.

012145
0000000000059914
Pima_County_Dept._of_Transportation\PCDOT-La_Cholla_Blvd-Ruthrauff\13.00_CAD\Construction_Documents\Civil\15C-05.dgn

08\20\09 4:44:44 PM aledesma

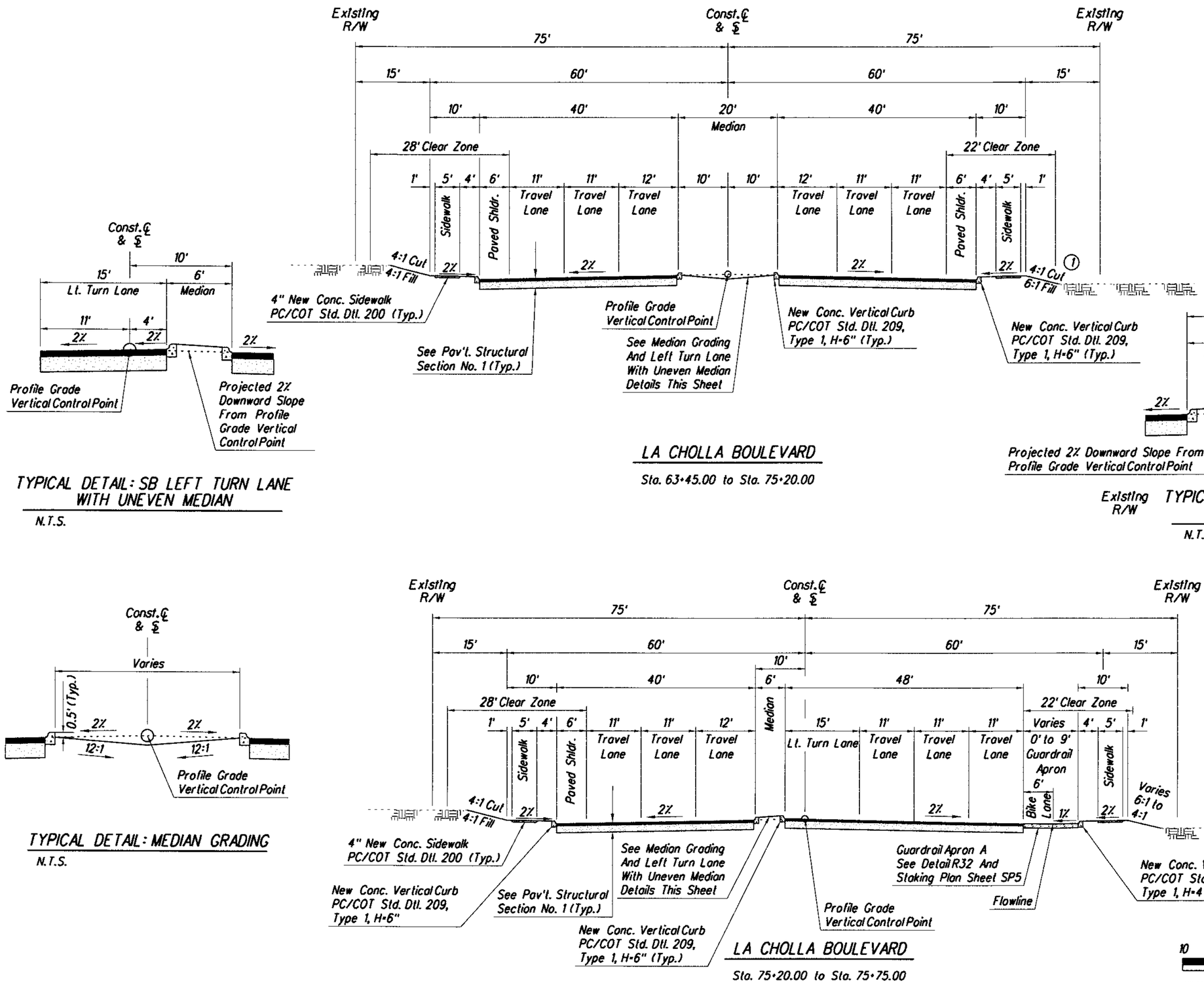

Scales	Horiz. 1"=10' Vert. 1"=10'	Sheet	TS6 of TS13	Page	10 of 356

Pima County Department of Transportation

Priscilla S. Cornelio, P.E., Director

LA CHOLLA BLVD.
RUTHRAUFF RD. TO RIVER RD.
ROADWAY TYPICAL SECTIONS
FOR LA CHOLLA BLVD.

HDR Engineering, Inc.
5210 East Williams Circle, Suite 530
Tucson, AZ 85711-4459
(520) 584-3600

Expires 03-31-2011

No.	Revision Description	Engineer	Date

		Date
Designed	L. Barela	July/2009
Drawn	A. Ledesma	July/2009
Checked	R. Britton	July/2009
Proj. Engr.	L. Barela	Aug/2009

012145
0000000000059914
Pima_County_Dept_of_Transportation\PCDOT-La_Cholla_Blvd-Ruthrauff\13.00_CAD\Construction_Documents\Civil\15C-06.dgn

08\20\09 4:44:49 PM oledesma

Project • 4LCITR

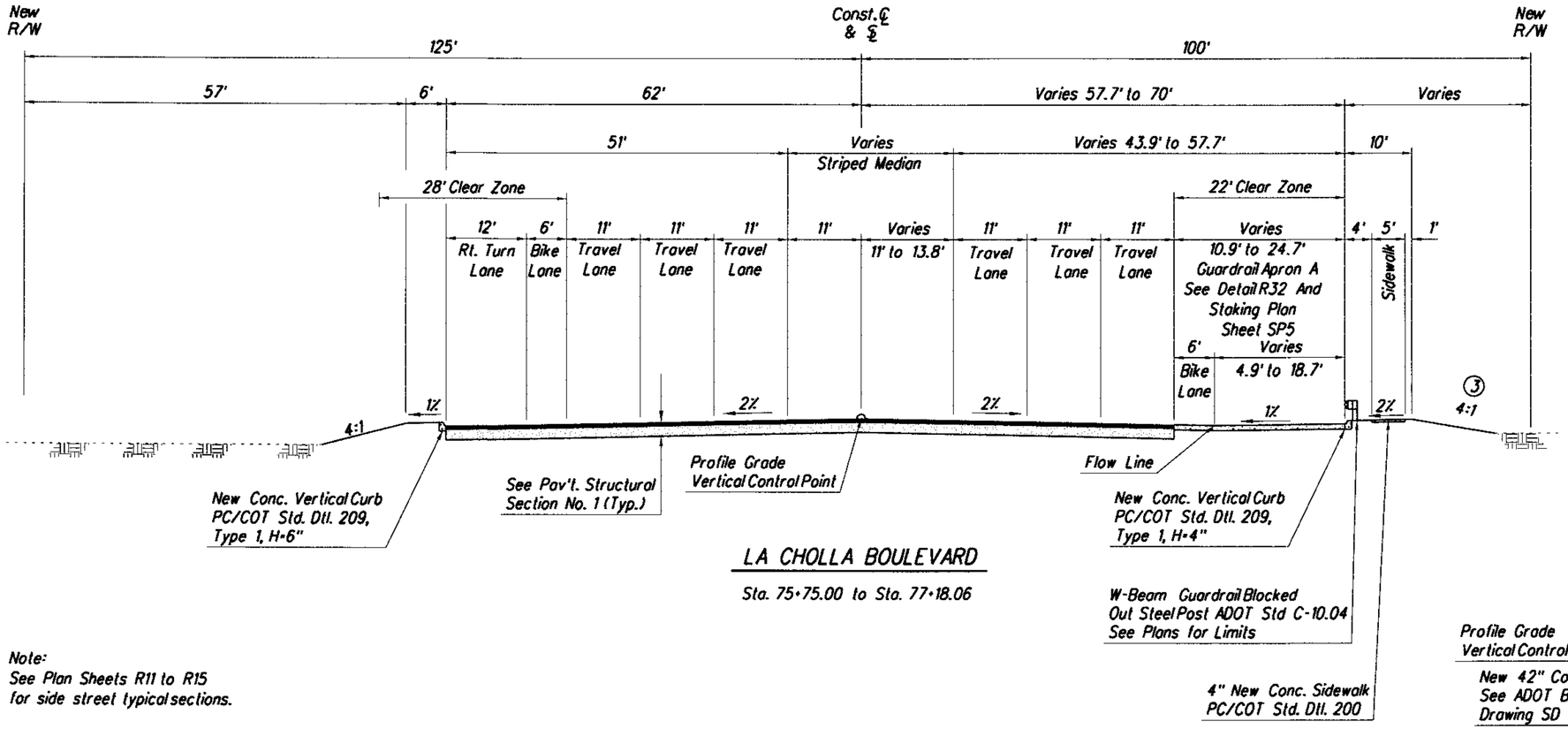

LA CHOLLA BOULEVARD

Sta. 75+75.00 to Sta. 77+18.06

Note:
See Plan Sheets R11 to R15 for side street typical sections.

③ Transition 4:1 Fill Slope to 6:1 from Sta. 76+00.00 to Sta. 76+25.00. Then use 6:1 Fill Slope to Sta. 77+18.06.

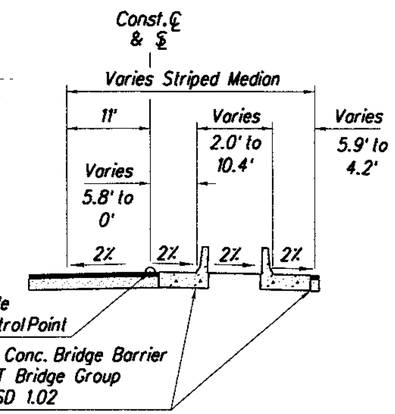

Barrier Detail

Sta. 77+18.06 to Sta. 77+54.97

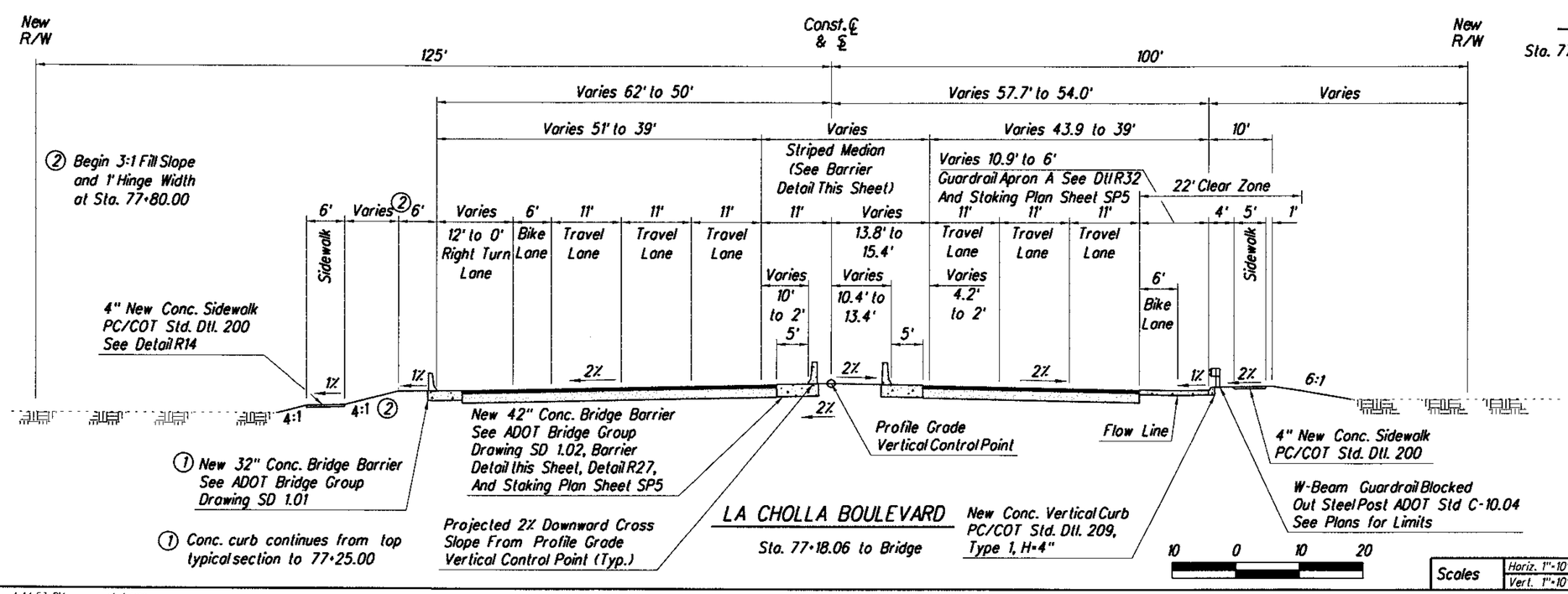

LA CHOLLA BOULEVARD

Sta. 77+18.06 to Bridge

Arizona Blue Stake
1-800-STAKE-IT
1-800-782-5348
Call Two Working Days Before You Dig

Scales	Horiz. 1"=10' Vert. 1"=10'	Sheet	TS7 of TS13	Page	11 of 356

Project # 4LCITR

Pima County Department of Transportation

Priscilla S. Cornelio, P.E., Director

No.	Revision Description	Engineer	Date

		Date
Designed	L. Barela	July 2009
Drawn	A. Ledesma	July 2009
Checked	R. Britton	July 2009
Proj. Engr.	L. Barela	Aug 2009

REGISTERED PROFESSIONAL ENGINEER (CIVIL) CERTIFICATE NO. 37267 LC BARELA DATE SIGNED 8-3-09 ARIZONA, U.S.A.
Expires 03-31-2011

HDR Engineering, Inc.
5210 East Williams Circle, Suite 530
Tucson, AZ 85711-4459
(520) 584-3600

LA CHOLLA BL VD.
RUTHRAUFF RD. TO RIVER RD.
ROADWAY TYPICAL SECTIONS
FOR LA CHOLLA BL VD.

012145
0000000000059914
Pima_County_Dept_of_Transportation\PCDOT-La_Cholla_Blvd-Ruthrauff\13.00_CAD\Construction_Documents\Civil\15C-07.dgn

08\20\09 4:44:53 PM aledesma

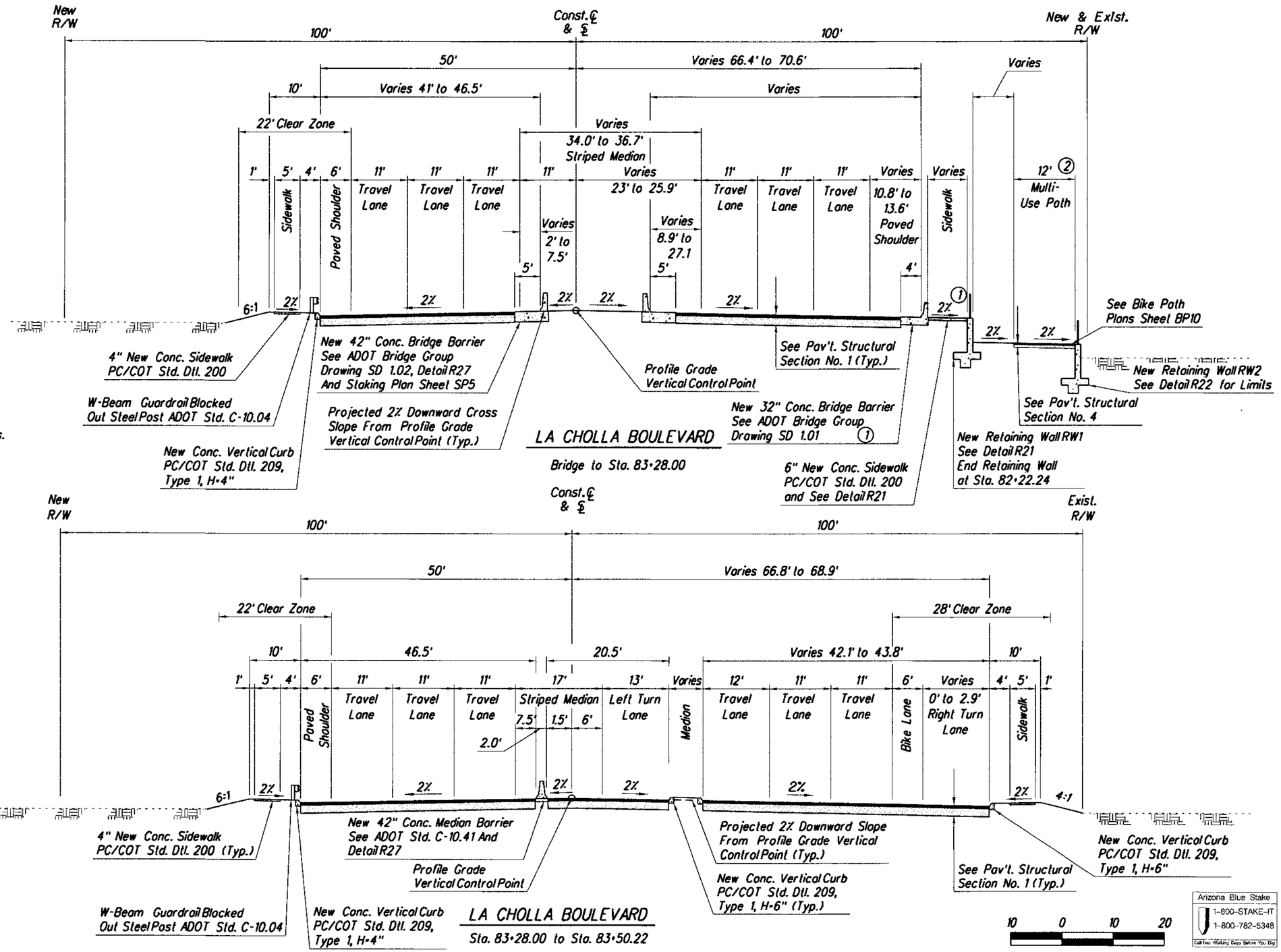

Note:
See Plan Sheets R11 to R16 for side street typical sections.

(1) Concrete barrier ends and curb access ramp begins at Sta. 82+41.63. See Detail R21, Sheet RD18 for additional information.

(2) End multi-use path at back of curb access ramp at approximate Sta. 82+58.

Arizona Blue Stake
1-800-STAKE-IT
1-800-782-5348
Call Two Working Days Before You Dig

Scales	Horiz. 1"=10' Vert. 1"=10'	Sheet TS8 of TS13	Page 12 of 356

Project # 4LCITR

Pima County Department of Transportation

Priscilla S. Cornelio, P.E., Director

No.	Revision Description	Engineer	Date

		Date
Designed	L. Barela	July/2009
Drawn	J. Amos	July/2009
Checked	R. Britain	July/2009
Proj. Engr.	L. Barela	Aug/2009

Expires 03-31-2011

HDR Engineering, Inc.
5210 East Williams Circle, Suite 530
Tucson, AZ 85711-4459
(520) 584-3600

LA CHOLLA BL VD.
RUTHRAUFF RD. TO RIVER RD.
ROADWAY TYPICAL SECTIONS
FOR LA CHOLLA BL VD.

012145
0000000000059914
Pima_County_Dept_of_Transportation\PCDOT-La_Cholla_Blvd-Ruthrauff\13.00_CAD\Construction_Documents\Civil\15C-08.dgn

08\20\09 4:44:58 PM aledesma

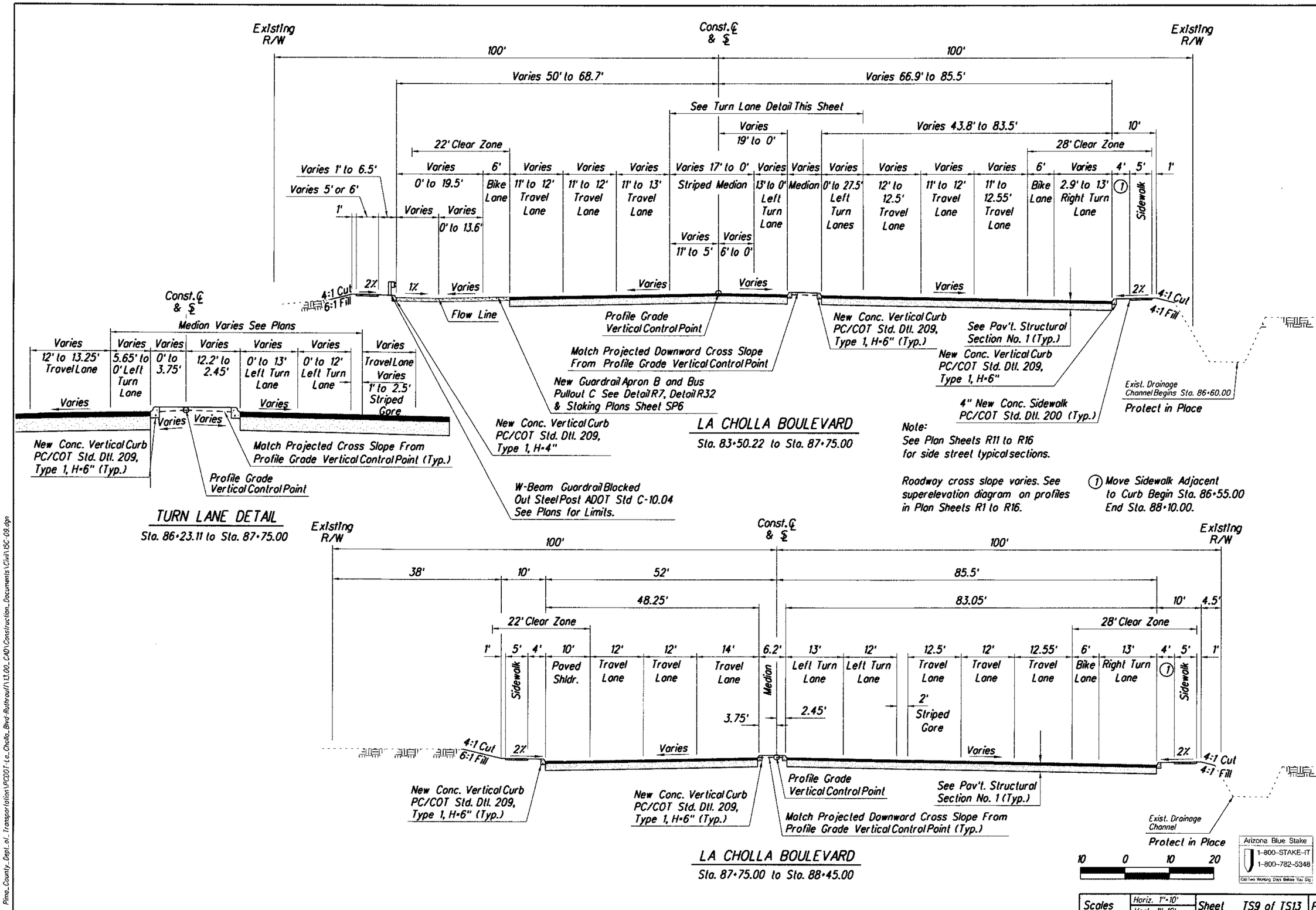

Priscilla S. Cornelio, P.E., Director

No.	Revision Description	Date

		Date
Designed	L. Barela	July/2009
Drawn	S. Amos	July/2009
Checked	R. Britton	July/2009
Proj. Engr.	L. Barela	Aug/2009

Expires 03-31-2011

HDR Engineering, Inc.
5210 East Williams Circle, Suite 530
Tucson, AZ 85711-4459
(520) 584-3600

Pima County Department of Transportation

LA CHOLLA BLVD.
RUTHRAUFF RD. TO RIVER RD.
ROADWAY TYPICAL SECTIONS
FOR LA CHOLLA BLVD.

Scales	Horiz. 1"=10' Vert. 1"=10'	Sheet	TS9 of TS13	Page	13 of 356

Project # 4LCITR

08\20\09 4:45:03 PM aledesma

012145
0000000000059914
Pima_County_Dept_of_Transportation\PCDOT-La_Cholla_Blvd-Ruthrauff\13.00_CAD\Construction_Documents\Civil\15C-09.dgn

Note:
See Plan Sheets R11 to R16
for side street typical sections.

Roadway cross slope varies see
superelevation diagram on profiles
in Plan Sheets R1 to R16.

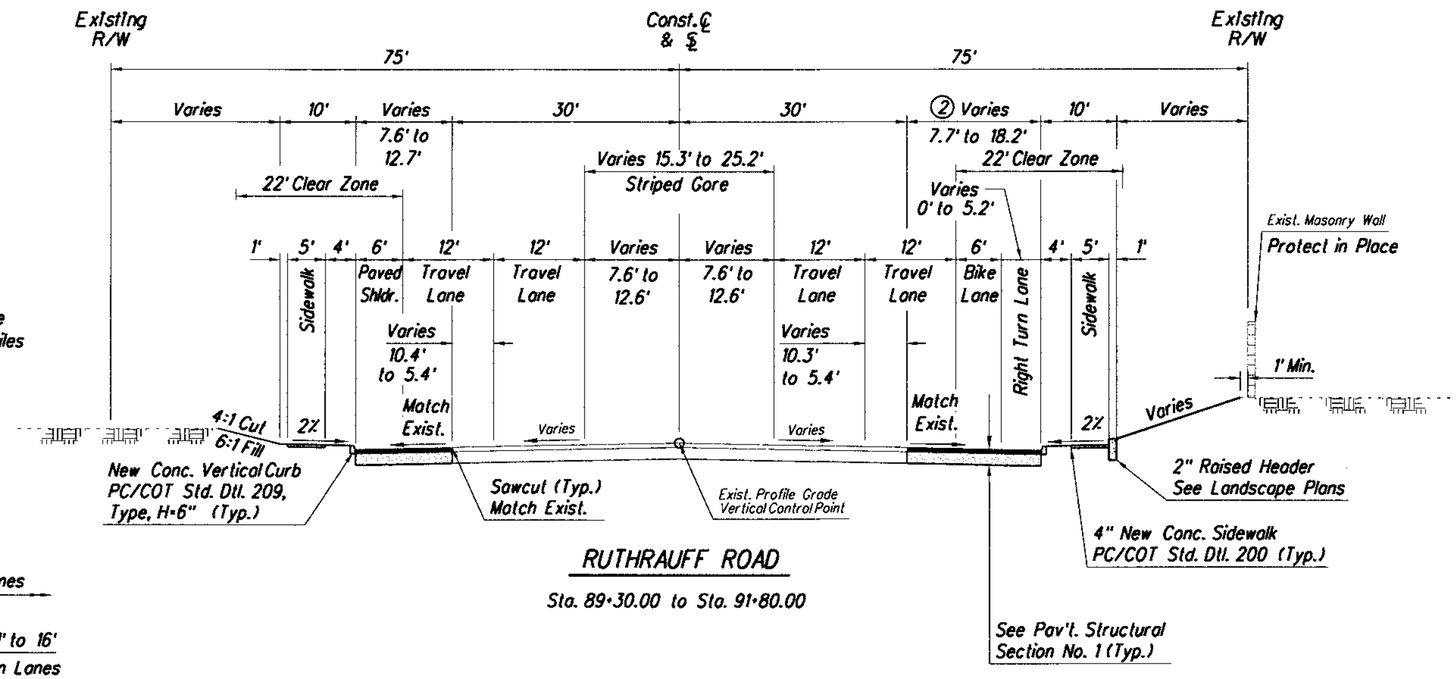

RUTHRAUFF ROAD

Sta. 89+30.00 to Sta. 91+80.00

② Right Side Widening
Begins at Sta. 89+35.00

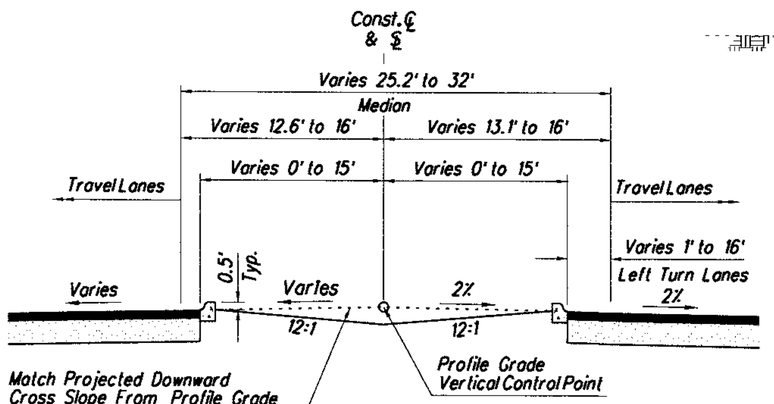

MEDIAN DETAIL

Sta. 91+80.00 to Sta. 94+49.04

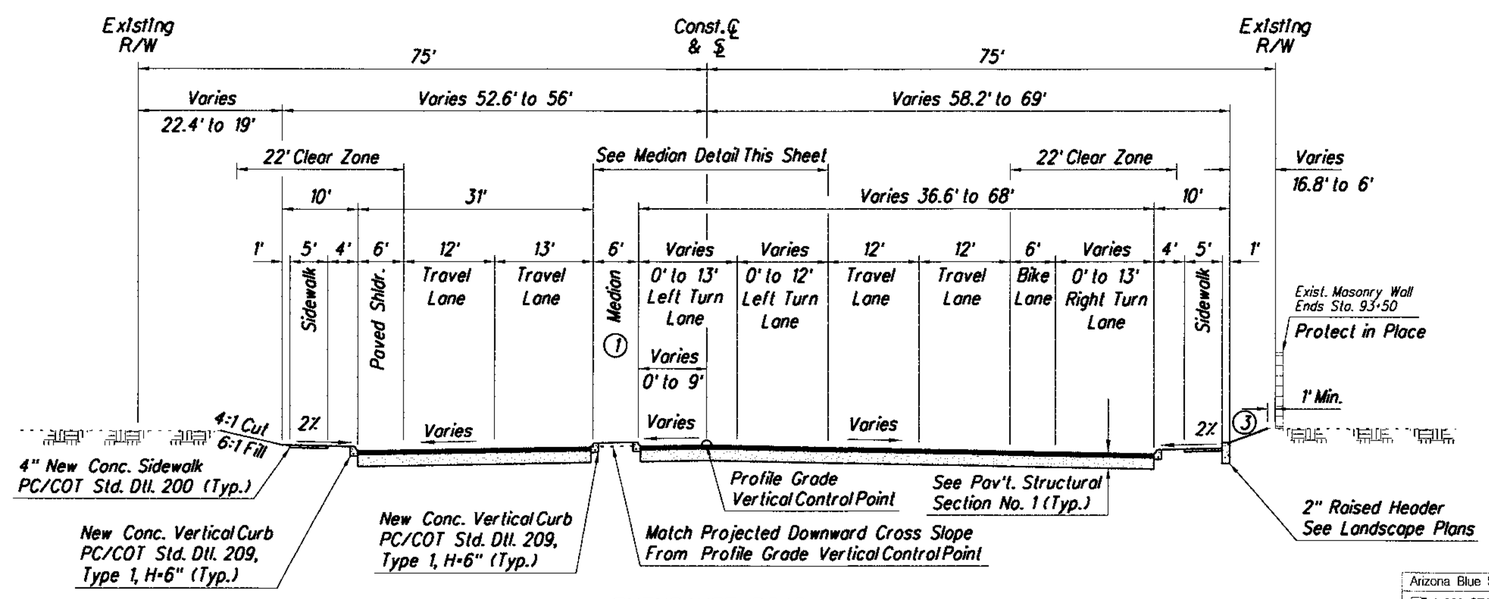

RUTHRAUFF ROAD

Sta. 91+80.00 to Sta. 97+30.00

① Median Width Varies from
Sta. 91+80.00 to Sta. 95+10.00

③ Slope Varies 4:1 to 2:1

10 0 10 20

Arizona Blue Stake
1-800-STAKE-IT
1-800-782-5348
Call Two Working Days Before You Dig

Scales	Horiz. 1"=10' Vert. 1"=10'	Sheet	TS10 of TS13	Page	14 of 356

Priscilla S. Cornelio, P.E., Director

No.	Revision Description	Engineer	Date

		Date
Designed	L. Barela	July/2009
Drawn	A. Ledesma	July/2009
Checked	R. Britton	July/2009
Proj. Engr.	L. Barela	Aug/2009

Professional Engineer Certificate 37267 L.E. BARELA Arizona, U.S.A. Expires 03-31-2011

HDR Engineering, Inc.
5210 East Williams Circle, Suite 530
Tucson, AZ 85711-4459
(520) 584-3600

LA CHOLLA BLVD.
RUTHRAUFF RD. TO RIVER RD.
ROADWAY TYPICAL SECTIONS
FOR RUTHRAUFF RD.

Pima County Department of Transportation

012945
0000000000059914
Pima_County_Dept._of_Transportation\PCDOT-La_Cholla_Blvd-Ruthrauff\13.00_CAD\Construction_Documents\Civil\SC-10.dgn

08\20\09 4:45:08 PM aledesma

Project # 4LCITR

Note:
See Plan Sheets R11 to R16 for side street typical sections.

Roadway cross slope varies see superelevation diagram on profiles in Plan Sheets R1 to R16.

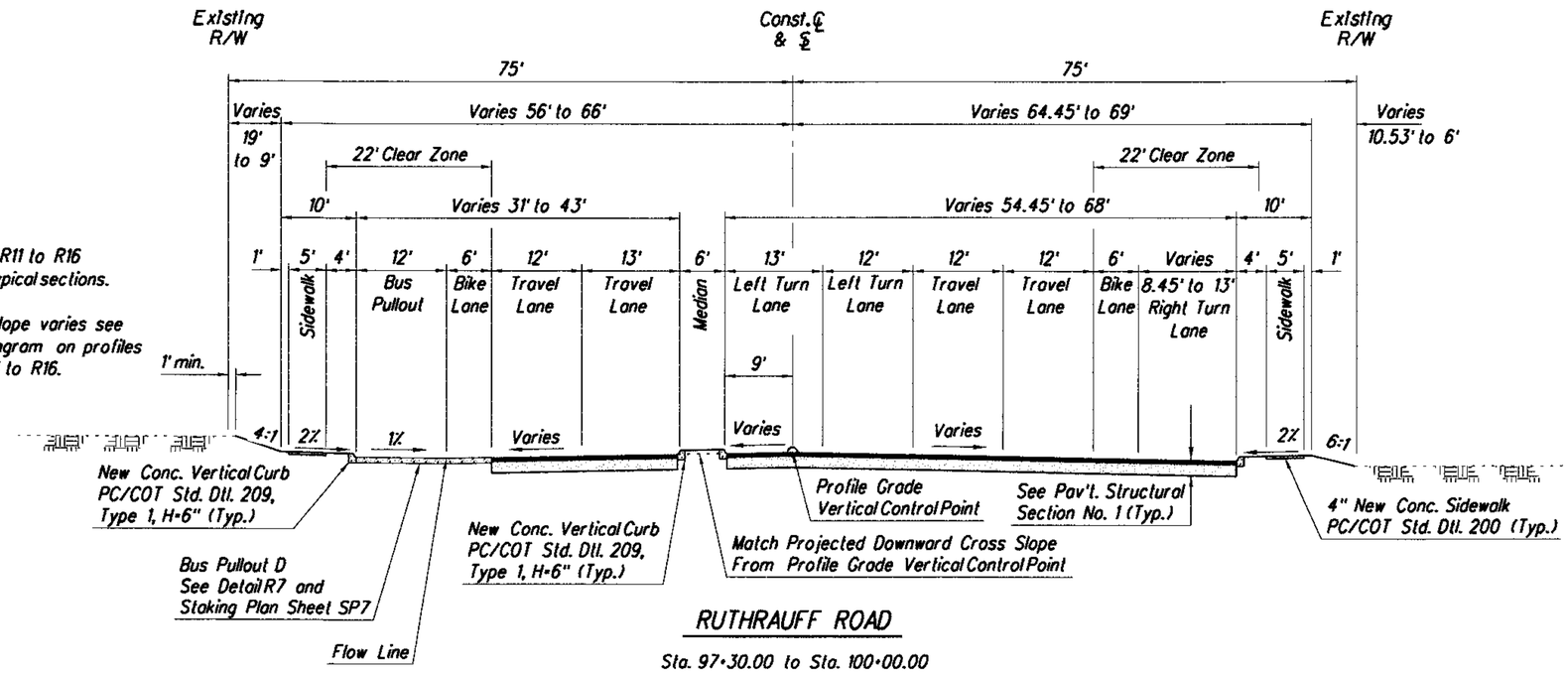

RUTHRAUFF ROAD

Sta. 97+30.00 to Sta. 100+00.00

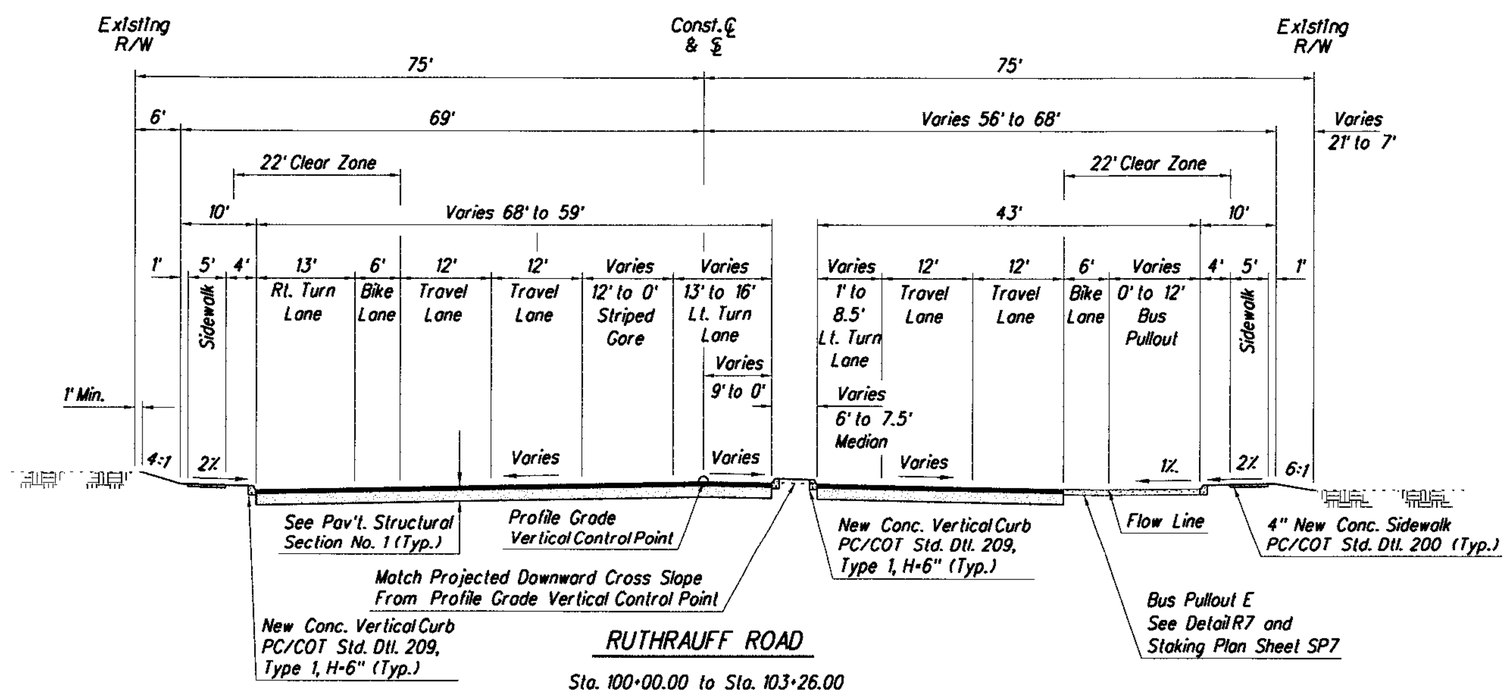

RUTHRAUFF ROAD

Sta. 100+00.00 to Sta. 103+26.00

10 0 10 20

Arizona Blue Stake
1-800-STAKE-IT
1-800-782-5348
Call Two Working Days Before You Dig

Scales	Horiz. 1"=10' Vert. 1"=10'	Sheet	TS11 of TS13	Page	15 of 356

Project # 4LCITR

Pima County Department of Transportation
Priscilla S. Cornelio, P.E., Director

No.	Revision Description	Engineer	Date

		Date
Designed	L. Barela	July/2009
Drawn	A. Lesesma	July/2009
Checked	R. Britton	July/2009
Proj. Engr.	L. Barela	Aug/2009

REGISTERED PROFESSIONAL ENGINEER (CIVIL) 37267 L.J. BARELA ARIZONA, U.S.A.
Expires 03-31-2011

HDR Engineering, Inc.
5210 East Williams Circle, Suite 530
Tucson, AZ 85711-4459
(520) 584-3600

LA CHOLLA BLVD.
RUTHRAUFF RD. TO RIVER RD.
ROADWAY TYPICAL SECTIONS
FOR RUTHRAUFF RD.

012145
0000000000059914
Pima_County_Dept_of_Transportation\PCDOT-La_Cholla_Blvd-Ruthrauff\13.00_CAD\Construction_Documents\Civil\15C-11.dgn

08\20\09 4:45:12 PM oledesma

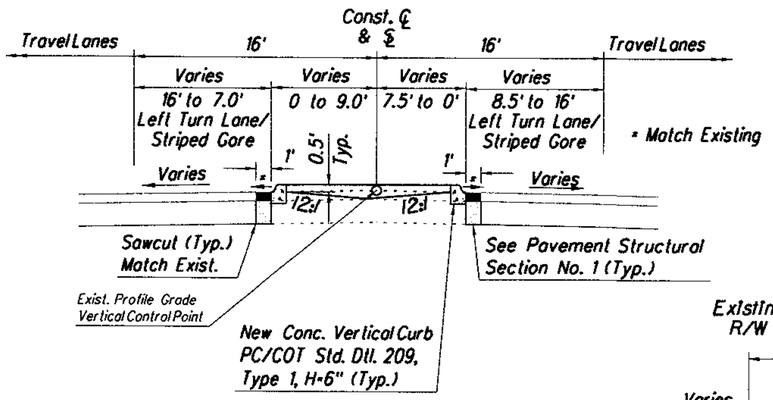

LEFT TURN DETAIL

Sta. 103+26.00 to Sta. 103+62.93

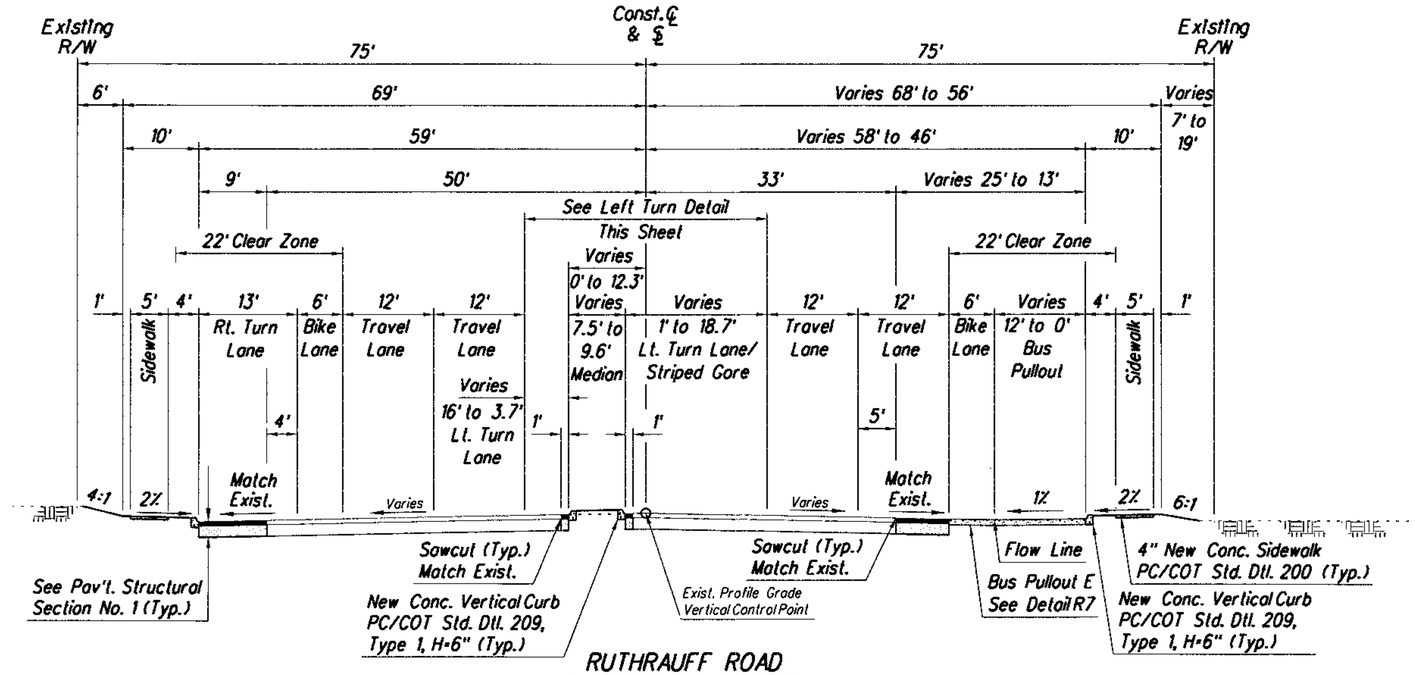

RUTHRAUFF ROAD

Sta. 103+26.00 to Sta. 103+83.00

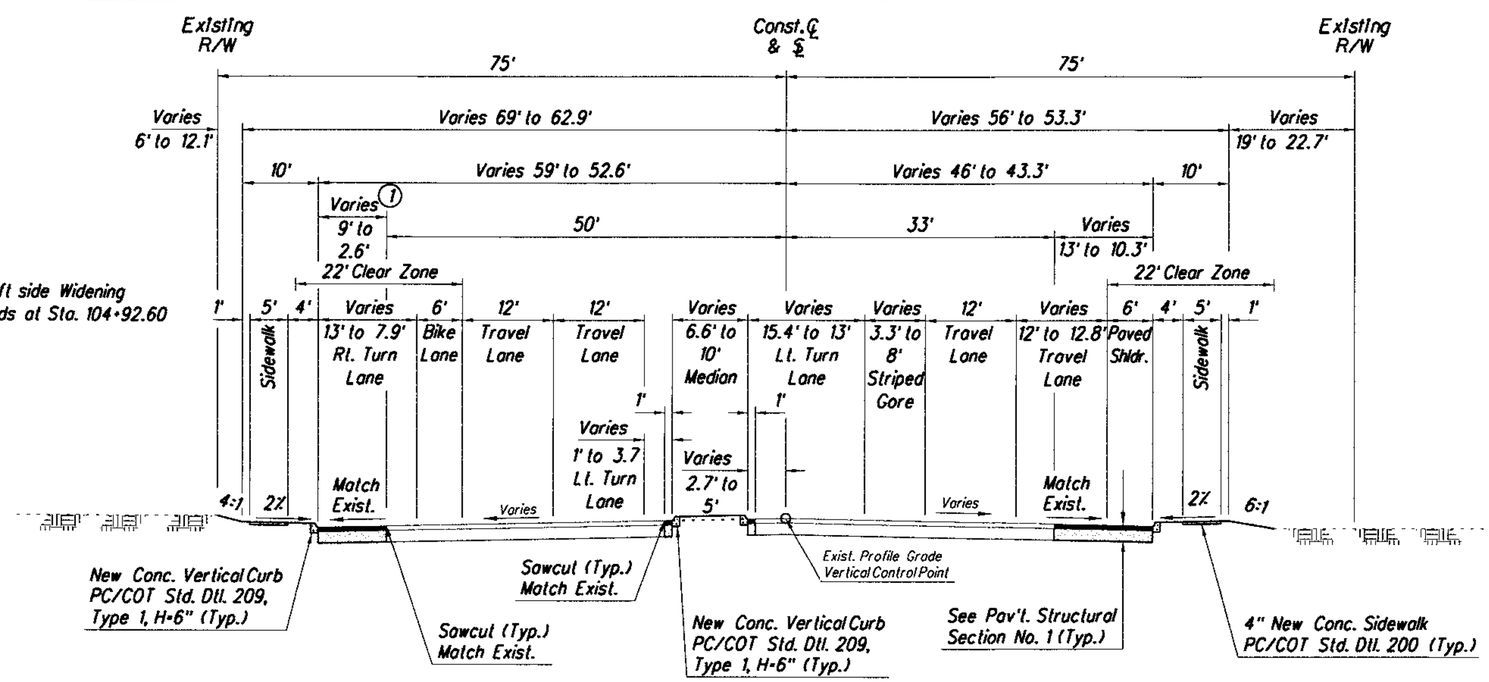

RUTHRAUFF ROAD

Sta. 103+83.00 to Sta. 106+07.00

10 0 10 20

Arizona Blue Stake
1-800-STAKE-IT
1-800-782-5348
Call Two Working Days Before You Dig

Scales	Horiz. 1"=10' / Verl. 1"=10'	Sheet TS12 of TS13	Page 16 of 356

Project # 4LCITR

Pima County Department of Transportation

Priscilla S. Cornelio, P.E., Director

No.	Revision Description	Engineer	Date

		Date
Designed	L. Barela	July/2009
Drawn	J. Amos	July/2009
Checked	R. Britton	July/2009
Proj. Engr.	L. Barela	Aug/2009

Expires 03-31-2011

HDR Engineering, Inc.
5210 East Williams Circle, Suite 530
Tucson, AZ 85711-4459
(520) 584-3600

LA CHOLLA BLVD.
RUTHRAUFF RD. TO RIVER RD.
ROADWAY TYPICAL SECTIONS
FOR RUTHRAUFF RD.

012145
0000000000059914
Pima_County_Dept._of_Transportation\PCDOT La_Cholla_Blvd-Ruthrauff\13.00_CAD\Construction_Documents\Civil\15C-12.dgn

08\20\09 4:45:17 PM aledesma

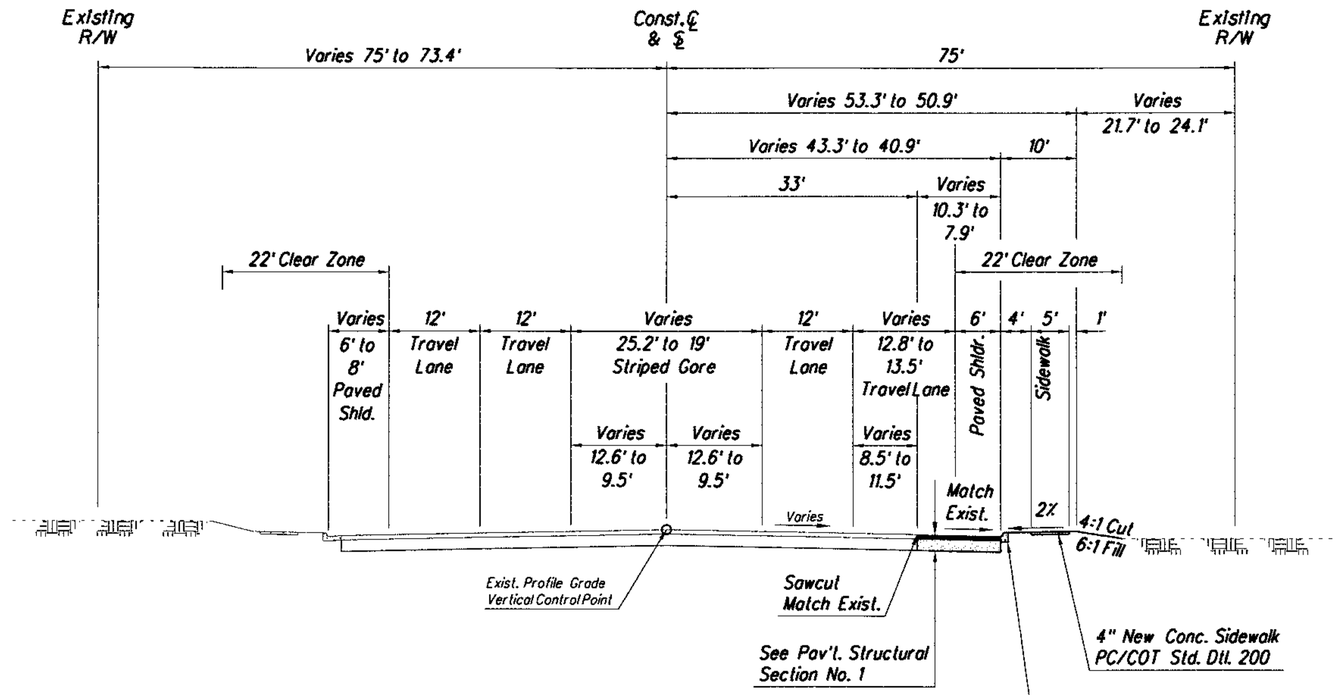

RUTHRAUFF ROAD

Sta. 106+07.00 to Sta. 107+70.00

Note:
See Plan Sheets R11 to R16 for side street typical sections.

Roadway cross slope varies see superelevation diagram on profiles in Plan Sheets R1 to R16.

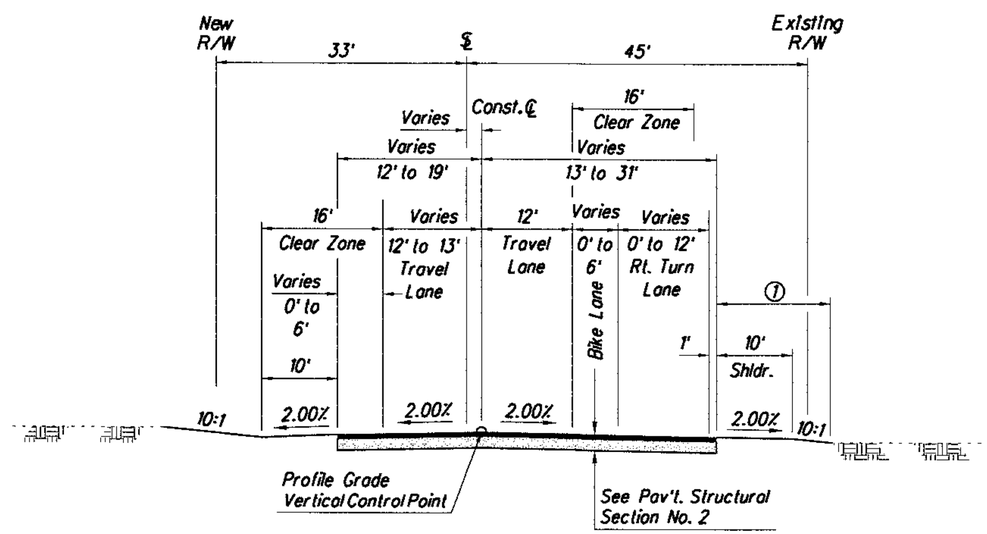

① Right side cut & fill slopes from this typical section continue to Sta. 8+90.56

CURTIS ROAD

Sta. 4+25.00 to Sta. 8+58.20

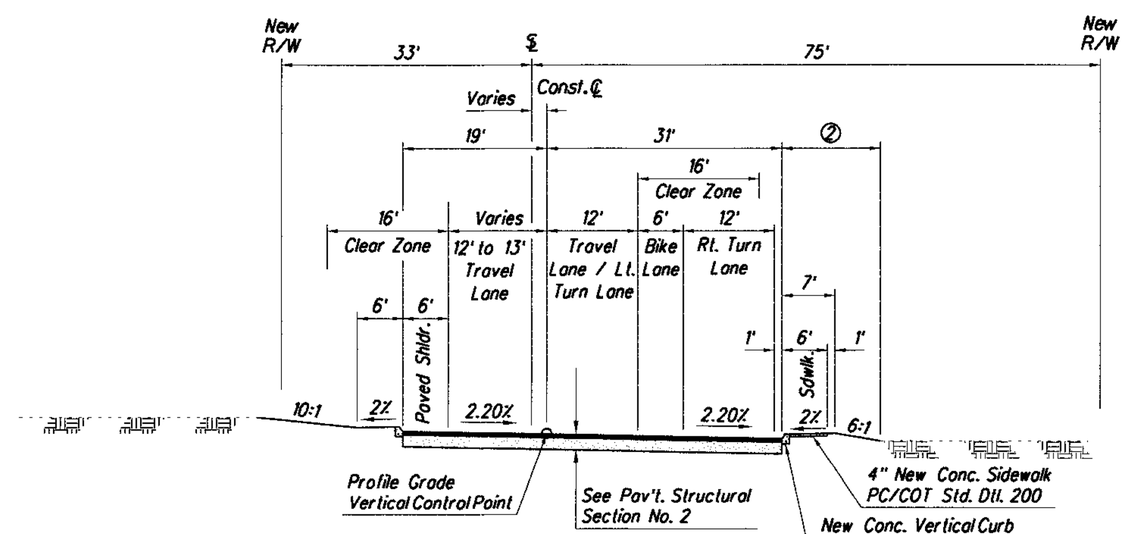

② Right side curb, sidewalk, and side slopes start at Sta. 8+90.56. Continue portion from the typical section on the left.

CURTIS ROAD

Sta. 8+58.20 to Sta. 9+50.00

10 0 10 20

Arizona Blue Stake
1-800-STAKE-IT
1-800-782-5348
Call Two Working Days Before You Dig

Scales	Horiz. 1"=10' Vert. 1"=10'	Sheet	TS13 of TS13	Page	17 of 356

Project # 4LCITR

Pima County Department of Transportation

Priscilla S. Cornelio, P.E., Director

No.	Revision Description	Engineer	Date

		Date
Designed	L. Barela	July/2009
Drawn	A. Ledesma	July/2009
Checked	R. Brittain	July/2009
Proj. Engr.	L. Barela	Aug/2009

Expires 03-31-2011

HDR Engineering, Inc.
5210 East Williams Circle, Suite 530
Tucson, AZ 85711-4459
(520) 584-3600

LA CHOLLA BL VD.
RUTHRAUFF RD. TO RIVER RD.
ROADWAY TYPICAL SECTIONS
FOR RUTHRAUFF RD.

012145
00000000005991 4
Pima_County_Dept_of_Transportation\PCD01-La_Cholla_Blvd-Ruthrauff\13.00_CAD\Construction_Documents\Civil\15C-13.dgn

08\20\09 4:45:21 PM aledesma

NOTE:
THE ZEROS IN PARENTHESIS (0, 0.0 & 0.00) IN THE HEADING OF SOME OF THE COLUMNS ARE THE RECOMMENDED PRECISION OF THE VALUE TO BE ENTERED IN THE COLUMN.

NOTE:
FOR PIPE CULVERT PLACEMENT SEE STANDARD DRAWING C-13.15

NOTE:
PIPE OPTIONS SELECTED ARE THOSE REQUIRED TO MEET MINIMUM SERVICE LIFE.
SHADED PIPE OPTION FIELDS ARE NOT ALLOWABLE ALTERNATES.

NRCP NRCIPCP CHDPEPP

CSP - CORRUGATED STEEL PIPE
CAP - CORRUGATED ALUMINUM PIPE
RCP - REINFORCED CONCRETE PIPE
NRCP - NON-REINFORCED CONCRETE PIPE
NRCIPCP - NON-REINFORCED CAST-IN-PLACE CONCRETE PIPE
CHDPEPP - CORRUGATED HIGH DENSTIY POLYETHYLENE PLASTIC PIPE

DESCRIPTION							CSP									CAP			RCP			END TREATMENT													QUANTITIES	
				In.	In.	Ft.	Degree	In.	Coating							In.					In.	Each													CUBIC YARD	
																						End Sec	Ea			Ft.			Grate			Ft.				
Station	Plan Ref No.	Controlling Fill Height Range	Size, Corrugated	Size, Smooth	Length (0)	Skew (0)	Corrugation	Wall Thickness (0.00)	Zinc	Bit. Coated Zinc	Aluminum	Bit. Coated Aluminum	Corrugation	Wall Thickness (0.00)	Uncoated	Bit. Coated	Class - Non Trench	Class - Trench	Class	Min Wall Thickness (0)	AASHTO M-294 Type C	AASHTO M-294 Type S	C-13.20 & C-13.25 Detail	Size, (in) Manhole	Standard or Detail	S-Single / D-Double	Location	D	L Wing (0.0)	L 18" Slotted Drn (0)	L 24" Slotted Drn (0)	Type	Elev. (0.00)	Depth	L (0.0)	Inlet Depression In.	Inlet Depression Ft.	Pipe Excavation	Trench Backfill	UPSTREAM STRUCTURE
Sta. 49+44 Rt.	150	1		54	33											II	II																			81	15	ADOT Collar
Sta. 49+81 Rt.	151	1		54	128											II	II						301												352	98	MH50
Sta. 50+94 Rt.	152	1		54	357											II	II						301												1091	382	MH51
Sta. 54+60 Lt.	153	3		54	568											II	II						301												1909	781	MH52
Sta. 60+30 Lt.	153A	3		54	38											II	II						301												139	64	MH53
Sta. 60+72 Lt.	154A	4		43X68	256											III	III						DM												104.3	316	Transition Structure
Sta. 63+33 Lt.	154	3		54	293											II	II						DM												985	403	Transition Structure
Sta. 66+30 Lt.	155	3		54	657											II	II						301												2008	703	MH54
Sta. 72+90 Lt.	156	4		54	643											VI & VII	& V						301												2947	1670	MH55
Sta. 68+50 Rt.	160	3		30	247											II	II						DF	D		>8'	16		60	EF-1		1			500	219	CB56, See Detail DF
Sta. 71+00 Rt.	161a	2		48	65											II	II						312												144	36	TS160
Sta. 71+70 Rt.	161c	2		48	59											II	II						DF	S		>8'	16			EF-1		1			148	49	CB57, See Detail DF
Sta. 72+31 Rt.	162	5		48	733											IV	IV						DF	D		>8'	8			EF-1		1			3258	2036	CB58, See Detail DF
Sta. 72+14 Rt.	163	5		66	744											IV	IV																		4299	2284	Existing 66" RCP
Sta. 72+11 Rt.	164	5		66	742											IV	IV																		4287	2278	Existing 66" RCP
Sta. 49+62 Rt.	166	1		54	21											II	II																		58	16	ADOT Collar
Sta. 48+26 Lt.	60	1		18	35											IV	IV						308	S		≤8'	12					1			27	3	CB60
Sta. 48+26 Lt.	61	1		18	87											IV	IV						308	S		≤8'	4					1			83	25	CB61
Sta. 52+50 Lt.	62	1		18	42											II	II						308	D		≤8'	8					1			64	36	CB62
Sta. 52+66 Rt.	50	2		24	31											II	II						308	D		≤8'	16					1			59	33	CB50
Sta. 61+42 Lt.	63	4		18	16											III	III						308	S		>8'	8					1			34	23	CB63
Sta. 60+73 Rt.	52	2		18	19											II	II						DG, DO	D		>8'	16		50	EF-1		1			22	9	CB52, See Details DG & DO
Sta. 63+60 Lt.	64	4		18	17											III	III						308	D		>8'	8					1			33	21	CB64
Sta. 63+49 Rt.	54	2		24	10											II	II						DG	D		>8'	16		20	EF-1		1			17	8	CB54, See Detail DG
Sta. 72+28 Lt.	66	3		18	6											II	II						308	D		>8'	8					1			8	4	CB66
Sta. 76+66 Lt.	67	5		18	18											IV	IV						308	S		>8'	4					1			47	35	CB67
Sta. 86+00 Lt.	68	1		30	36											III	III					1	308	D		≤8'	8					1			41	0	CB68
Sheet Total																																					

REV. DATE: 01-31-2002

FILL HEIGHT RANGE TABLE (Ft.)													
RANGE NO.		1	2	3	4	5	6	7	8	9	10	11	12
FILL	>	1	3	5	8	11	15	20	25	30	40	55	70
HEIGHT (Ft.)	≤	3	5	8	11	15	20	25	30	40	55	70	90

SHOULD FIELD CONDITIONS VARY FROM THE RANGE INDICATED, CONTACT DESIGN FOR RE-EVALUATION OF PIPE DESIGN REQUIREMENTS.

PIPE CORRUGATION			
A	2⅔x½	D	6x2
B	3x1	E	3x1 or 9x2½
C	9x2½		

Notes:
1. *Station shown is approximate. See pipe profiles for stationing.*
2. *Station for catch basins are located:*
   - *Center of sump at face of curb for catch basins in roadway*
   - *Center of structure for Type 4 catch basins behind the curb*
   - *As shown on special details*

Arizona Blue Stake
1-800-STAKE-IT
1-800-782-5348
Call Two Working Days Before You Dig

Priscilla S. Cornelio, P.E., Director

No.	Revision Description	Engineer	Date

		Date
Designed	A. Ledesma	July/2009
Drawn	A. Ledesma	July/2009
Checked	R. Brittain	July/2009
Proj. Engr.	R. Brittain	Mar/2009

Expires 03-31-2011

HDR Engineering, Inc.
5210 East Williams Circle, Suite 530
Tucson, AZ 85711-4459
(520) 584-3600

Pima County Department of Transportation

LA CHOLLA BLVD.
RUTHRAUFF RD. TO RIVER RD.
PIPE SUMMARY SHEET

Scales | Sheet SUM1 of SUM3 | Page 18 of 356

012145
00000000000055914
Pima_County_Dept_of_Transportation\PCDOT-La_Cholla_Blvd-Ruthrauff\13.00_CAD\Construction_Documents\Civil\16C-01.dgn

08\20\09 4:45:25 PM aledesmo

Project • 4LCITR

NOTE:
THE ZEROS IN PARENTHESIS (0, 0.0 & 0.00) IN THE HEADING OF SOME OF THE COLUMNS ARE THE RECOMMENDED PRECISION OF THE VALUE TO BE ENTERED IN THE COLUMN.

NOTE:
FOR PIPE CULVERT PLACEMENT SEE STANDARD DRAWING C-13.15

NOTE:
PIPE OPTIONS SELECTED ARE THOSE REQUIRED TO MEET MINIMUM SERVICE LIFE.
SHADED PIPE OPTION FIELDS ARE NOT ALLOWABLE ALTERNATES.

NRCP — NRCIPCP — CHDPEPP

CSP - CORRUGATED STEEL PIPE
CAP - CORRUGATED ALUMINUM PIPE
RCP - REINFORCED CONCRETE PIPE
NRCP - NON-REINFORCED CONCRETE PIPE
NRCIPCP - NON-REINFORCED CAST-IN-PLACE CONCRETE PIPE
CHDPEPP - CORRUGATED HIGH DENSTIY POLYETHYLENE PLASTIC PIPE

DESCRIPTION							CSP								CAP		RCP					END TREATMENT														QUANTITIES	
				In.	In.	Ft.	Degree	In.	Coating						In.					In.		Each														CUBIC YARD	
																							Catch basin, Manhole, Headwall & Junction Structure														
																					End Sec	Ea			Ft.			Grate		Ft.							
Station	Plan Ref No.	Controlling Fill Height Range	Size, Corrugated	Size, Smooth	Length (0)	Skew (0)	Corrugation	Wall Thickness (0.00)	Zinc	Bit. Coated Zinc	Aluminum	Bit. Coated Aluminum	Corrugation	Wall Thickness (0.00)	Uncoated	Bit. Coated	Class - Non Trench	Class - Trench	Class	Min Wall Thickness (0)	AASHTO M-294 Type C	AASHTO M-294 Type S	C-13.20 & C-13.25	Detail -	Size, (in) Manhole	Standard or Detail	S-Single / D-Double	Location	D	L Wing (0.0)	L 18" Slotted Drn (0)	L 24" Slotted Drn (0)	Type	Elev. (0.00)	Depth	L (0.0)	Inlet Depression Pipe Excavation	Trench Backfill	UPSTREAM STRUCTURE
Sta. 85+88 Rt.	69	1		24	71												III	III							308	-		≤8'	0					1		104	45	CB69
Sta. 85+77 Rt.	70	1		24	74												III	III							DG	D		≤8'	8		40	EF-1		1		93	31	CB70, See Detail DG
Sta. 90+61 Rt.	71	1		18	3												IV	IV							308	S		≤8'	4					1		3	1	CB71
Sta. 90+62 Lt.	72	1		18	3												IV	IV							308	S		≤8'	4					1		3	1	CB72
Sta. 91+75 Rt.	73	<1		24	35												V	V							308	-		≤8'	0					1		29	0	CB73
Sta. 91+97 Lt.	74	1		24	4												III	III							308	S		≤8'	12					1		4	1	CB74
Sta. 92+45 Rt.	75	1		18	36												IV	IV							308	S		≤8'	12					1		48	24	CB75
Sta. 93+39 Lt.	77	1		18	11												IV	IV							308	S		≤8'	8					1		11	3	CB77
Sta. 93+57 Rt.	78	<1		34X53	66												IV	IV							DI	S		≤8'	8			DI		1		139	12	CB78
Sta. 92+81 Rt.	79	1		18	6												IV	IV							309	S		≤8'				EF-1				6	2	CB79, See Detail DJ
Sta. 100+94 Rt.	80	2		18	14												II	II							309	D		≤8'			40	EF-1				19	9	CB80
Sta. 100+94 Lt.	81	1		18	32												IV	IV							310	-		≤8'	0			EF-1		1		31	9	CB81, Build over existing pipe. See Detail DL
Sta. 105+11 Rt.	82	<1		24	10												V	V							308	D		≤8'	16					1		8	0	CB82
Sta. 103+12 Lt.	83	1		18	92												IV	IV							308	S		≤8'	4					1		106	44	CB83
Sta. 103+03 Rt.	84	2		24	9												II	II							309	D		≤8'			60	EF-1	2269.70			11	4	CB84
Sta. 47+15 Rt.	41	1		42	112												II	II							DE											154	0	There are 2 - 42" RCP's
Sta. 70+31 Rt.	57a	3		18	15												II	II							309	S		≤8'				EF-1	2261.00			20	10	CB57a
Sta. 71+00 Rt.	57b	2		30	14												II	II							309	D		≤8'				EF-1	2260.20			28	12	CB57b
Sta. 71+70 Rt.	57c	2		18	12												II	II							309	S		≤8'				EF-1	2260.50			14	6	CB57c
Sta. 72+31 Rt.	58a	2		24	12												II	II							309	D		≤8'				EF-1	2260.10			18	8	CB58a
STA. 45+20 Lt.	59	1		30	237												III	III							C-15.80	D		≤8'				C-15.80	2273.00			300	30	CB59, See Detail DB
Sheet Total																																						

REV. DATE: 01-31-2002

FILL HEIGHT RANGE TABLE (Ft.)													
RANGE NO.		1	2	3	4	5	6	7	8	9	10	11	12
FILL	>	1	3	5	8	11	15	20	25	30	40	55	70
HEIGHT (Ft.)	≤	3	5	8	11	15	20	25	30	40	55	70	90

SHOULD FIELD CONDITIONS VARY FROM THE RANGE INDICATED, CONTACT DESIGN FOR RE-EVALUATION OF PIPE DESIGN REQUIREMENTS.

PIPE CORRUGATION			
A	2⅔x½	D	6x2
B	3x1	E	3x1 or 9x2½
C	9x2½		

Notes:
1. *Station shown is approximate. See pipe profiles for stationing.*
2. *Station for catch basins are located:*
   - *Center of sump at face of curb for catch basins in roadway*
   - *Center of structure for Type 4 catch basins behind the curb*
   - *As shown on special details*

Arizona Blue Stake
1-800-STAKE-IT
1-800-782-5348
Call Two Working Days Before You Dig

Pima County Department of Transportation

Priscilla S. Cornelio, P.E., Director

No.	Revision Description	Engineer	Date

		Date
Designed	A. Ledesma	July/2009
Drawn	A. Ledesma	July/2009
Checked	R. Brittain	July/2009
Proj. Engr.	R. Brittain	July/2009

REGISTERED PROFESSIONAL ENGINEER (CIVIL) CERTIFICATE NO. 13763 ROBERT DEAN BRITTAIN Date Signed 8-24-09 ARIZONA, U.S.A.
Expires 03-31-2011

HDR Engineering, Inc.
5210 East Williams Circle, Suite 530
Tucson, AZ 85711-4459
(520) 584-3600

LA CHOLLA BLVD.
RUTHRAUFF RD. TO RIVER RD.
PIPE SUMMARY SHEET

Scales | Sheet SUM2 of SUM3 | Page 19 of 356

012145
0000000000059914
Pima_County_Dept_of_Transportation\PCDOT-La_Cholla_Blvd-Ruthrauff\13.00_CAD\Construction_Documents\Civil\16C-02.dgn

08\20\09 4:45:30 PM aledesma

Project # 4LCITR

LOCATION ◇ — BARRIER TYPE (NEW GUARDRAIL; EXISTING GUARDRAIL, Linear Feet (0.0); NEW CONCRETE BARRIER)

Beginning Station (Approximate) (0)	Plan Reference Number	Type "A" C-10.01, Type "B" C-10.02 ◇	C-10.03 (Timber)	C-10.04 (Steel)	Detail	Length (Linear Feet) (0.0)	C-10.06 Nested W-Beam Length (Linear Feet) (0.0) ▲	C-10.07 Bolted Anchor (Each)	Reconstruct	Remove and Salvage	Construct from Salvage	Remove	C-10.40 (Full)	C-10.41 (Full)	SD 1.01 (32") (Half)	SD-1.02 (42") (Half)	C-10.52 & C-10.53 (Half)	C-10.54 & C-10.55 (Half)	Detail	Length (Linear Feet) (0.0)	C-12.30 Chain-Link Cable Barrier Length (Linear Feet) (0.0)	C-10.42 Glare Screen Length (Linear Feet) (0.0)	REMARKS
76+88.70, 59.75' Rt		A		X		75.0																	Southeast Corner of NB Bridge, See Detail R32
77+10.00, 6.86' Rt														X						8.0			Median Barrier South of Bridge, See Detail R27
77+32.87, 3.49' Rt																X				83.8			Median Barrier for SB Bridge, See Detail R27
77+33.02, 8.88' Rt																X				69.7			Median Barrier for NB Bridge, See Detail R27
77+44.89, 59.91' Lt															X					95.0			Southwest Corner of SB Bridge
81+68.79, 66.35' Rt															X					53.0			Northeast Corner of NB Bridge
81+98.85, 14.28' Rt																X				115.4			Median Barrier for NB Bridge, See Detail R27
82+12.13, 9.00' Lt																X				101.0			Median Barrier for SB Bridge, See Detail R27
82+51.42, 50.00' Lt		A		X		200.0																	Northwest Corner of NB Bridge, See Detail R32
83+28.00, 2.50' Lt														X						22.0			Median Barrier North of Bridge
Sheet Total						275.0														547.9			

MISC — TRANSITION (Each: Thrie Beam, Rub Rail C-10.70, Concrete Half Barrier C-10.75) — END TREATMENT ◪ (◧ Tangent: ET-PLUS Detail, SKT-350 Detail; ◧ Flared: SRT-350 Detail, FLEAT-350 Detail R24; End Anchor C-10.08 or Detail)

Beginning Station	Begin - Treatment at Beginning / End - Treatment at End	C-10.30	Detail SD 1.03	Remove & Salvage	Reconstruct	Detail	w/Curb	w/o Curb	C-10.71	Type 1	Type 2	Detail R28	Detail R34	New	Reconstruct	New	Reconstruct	New	Reconstruct	New - 4' Flare	Reconstruct	New	Reconstruct	Remove & Salvage	Cst from Salvage	Attenuator DIL R25	Remove & Salvage BCT (L=12.5')
76+88.70, 59.75' Rt	Begin																			1							
	End		1																								
77+10.00, 6.86' Rt	Begin																									1	
	End												1														
77+32.87, 3.49' Rt	Begin																										
	End																										
77+33.02, 8.88' Rt	Begin																										
	End																										
77+44.89, 59.91' Lt	Begin											1															
	End																										
81+68.79, 66.35' Rt	Begin																										
	End											1															
81+98.85, 14.28' Rt	Begin																										
	End																										
82+12.13, 9.00' Lt	Begin																										
	End																										
82+51.42, 50.00' Lt	Begin		1																								
	End																			1							
83+28.00, 2.50' Lt	Begin												1														
	End																									1	
	Begin																										
	End																										
	Begin																										
	End																										
	Begin																										
	End																										
Sheet Total			2									2	2							2						2	

THE ZEROS IN PARENTHESIS (0.0) INDICATE THE DIMENSIONAL PRECISION FOR THAT COLUMN

▲ THE LENGTH OF NESTED W-BEAM IS FOR TYPES 2 OR 3 (37.5'). DETERMINATION OF TYPE (1, 2 or 3) TO USE IS MADE IN THE FIELD. THE PAY QUANTITY IS THE ACTUAL LENGTH INSTALLED (25.0' or 37.5').

◪ ALLOWABLE END TREATMENT OPTIONS ARE INDICATED WITH THE LETTER "X" IN THE SPACE. BLANK SPACES ARE NOT VIABLE ALTERNATIVES.

◧ NOTE: FOR AS-BUILT PREPARATION - CIRCLE END TREATMENT INSTALLED

NOTE:
All C & SD Details referenced on this sheet pertain to the ADOT Standard Details.

Arizona Blue Stake
1-800-STAKE-IT
1-800-782-5348
Call Two Working Days Before You Dig

Priscilla S. Cornelio, P.E., Director

Designed	A. Ledesma	July/2009
Drawn	A. Ledesma	July/2009
Checked	R. Brittain	July/2009
Proj. Engr.	L. Barela	Aug/2009

No.	Revision Description	Engineer	Date

Registered Professional Engineer (Civil) Certificate No. 37267 L.J. BARELA, Arizona, U.S.A. Date Signed 8-24-09

Expires 03-31-2011

HDR
HDR Engineering, Inc.
5210 East Williams Circle, Suite 530
Tucson, AZ 85711-4459
(520) 584-3600

Pima County Department of Transportation

LA CHOLLA BLVD.
RUTHRAUFF RD. TO RIVER RD.
BARRIER SUMMARY SHEET

012145
0000000000059914
Pima_County_Dept_of_Transportation\PCDOT-La_Cholla_Blvd-Ruthrauff\13.00_CAD\Construction_Documents\Civil\16C-03.dgn
08\20\09 4:45:35 PM aledesma
Project • 4LCITR

Notes:

1. See plan sheets from other plan series for additional demolition information:
   - A) Bike Plans See BP11 to BP12
   - B) Storm Drain Plans See SD14 & SD15
   - C) Storm Drain Details See DD9, DD10 and DD12
   - D) Water Plans See W2 to W11
   - E) Signing and Striping Plans See T1, T6 to T13
   - F) Traffic Signal Plans See SL1
   - G) Landscape Plans See N1 to N8, DP1 to DP6
   - H) Bridge Plans See S3, S5, S12, S14 to S17

2. Privately owned items, such as signs and advertising, removed from within the Right-of-Way limits shall be returned to their proper owner after removal.

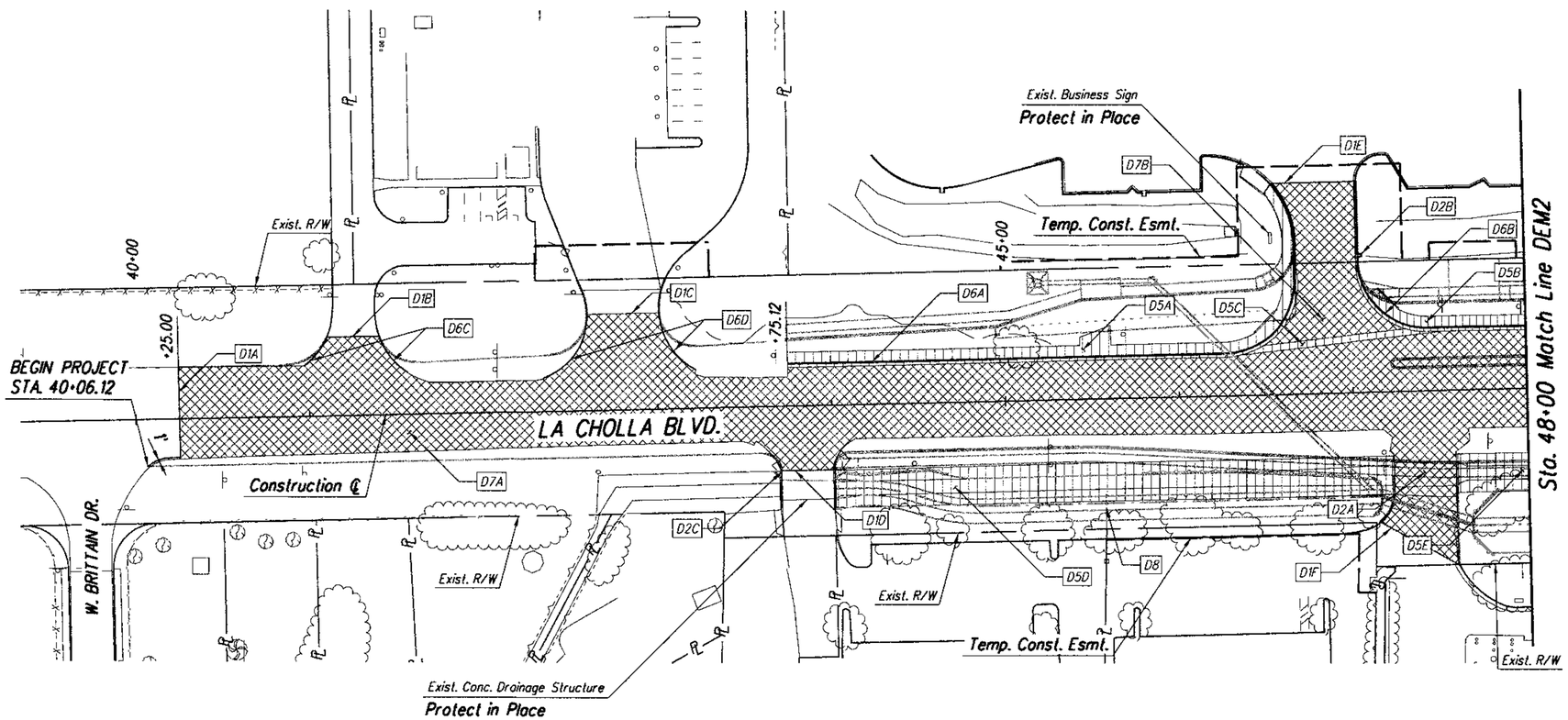

Item No.	Qty.	Unit	Description
D1	274	L.F.	Sawcut Pavement
A	76	L.F.	Sta. 40+06.12, 27' Rt. to Sta. 40+25.00, 22.2' Rt. to Sta. 40+25.00, 29.5' Lt.
B	30	L.F.	Sta. 41+10.92, 45' Lt. to Sta. 41+40.51, 45' Lt.
C	41	L.F.	Sta. 42+60.59, 55' Lt. to Sta. 43+01.67, 55' Lt.
D	29	L.F.	Sta. 43+70.56, 37.08' Rt. to Sta. 44+00.05, 37.12' Rt.
E	47	L.F.	Sta. 46+56.28, 121.39' Lt. to Sta. 47+03.02, 121.39' Lt.
F	51	L.F.	Sta. 47+14.40, 75' Rt. to Sta. 47+58.51, 100' Rt.
D2	3	Ea.	Removal of Structures & Obstructions
A	1	Ea.	Remove 12' X 2' R.C.B.C. - Sta. 47+23.03, 40.70' Rt. to Sta. 47+58.84, 40.99' Rt.
B	1	Ea.	Remove Drainage Spillway - Sta. 47+04.72, 77.64' Lt.
C	1	Ea.	Remove 4 LF of Headwall - Sta. 43+69.45, 37.13' Rt. to Sta. 43+69.42, 41.13' Rt. See Sheet SD14.
D5	11,280	S.F.	Removal of Misc. Concrete
A	2370	S.F.	Remove Sidewalk - Sta. 43+75.12, 24.77' Lt. to Sta. 46+56.28, 120.75' Lt.
B	575	S.F.	Remove Sidewalk - Sta. 47+09.63, 56.3' Lt. to Sta. 48+00.00, 36.23' Lt.
C	372	S.F.	Remove Valley Gutter - Sta. 46+35.88, 23.16' Lt. to Sta. 47+50.17, 33.62' Lt.
D	7052	S.F.	Remove Conc. Drainage Channel - Sta. 44+01.42, 37.39' Rt. to Sta. 47+21.74, 36.95' Rt.
E	911	S.F.	Remove Conc. Drainage Channel - Sta. 47+59.48, 36.86' Rt. to Sta. 48+00.00, 36.85' Rt.
D6	683	L.F.	Removal of Curb
A	376	L.F.	Remove Curb & Gutter - Sta. 43+75.12, 23.80' Lt. to Sta. 46+56.28, 121.39' Lt.
B	170	L.F.	Remove Curb & Gutter - Sta. 47+03.02, 121.53' Lt. to Sta. 48+00.00, 35.3' Lt.
C	49	L.F.	Remove Concrete Header - Sta. 40+96.91, 28.87' Lt. to Sta. 41+10.92, 45' Lt. Sta. 41+40.51, 45' Lt. to Sta. 41+57.05, 23.97' Lt.
D	88	L.F.	Remove Concrete Header - Sta. 42+34.93, 18.9' Lt. to Sta. 42+60.59, 55' Lt. Sta. 43+01.67, 55' Lt. to Sta. 43+22.52, 21.73' Lt.
D7	4920	S.Y.	Removal of Bituminous Pavement
A	4510	S.Y.	Sta. 40+25.00 to 48+00.00, Lt. & Rt.
B	410	S.Y.	Sta. 46+49.24, 28.29' Lt. to Sta. 47+03.02, 121.39' Lt.
D8	8	L.F.	Sta. 45+56.70, 54.50' Rt to Sta. 45+56.59, 62.50' Rt Remove 6" PVC Pipe.

40 0 40 80

Arizona Blue Stake
1-800-STAKE-IT
1-800-782-5348
Call Two Working Days Before You Dig

Pima County Department of Transportation

Priscilla S. Cornelio, P.E., Director

No.	Revision Description	Engineer	Date

		Date
Designed	L. Barela/J. Bennett	July/2009
Drawn	A. Ledesma/J. Solo	July/2009
Checked	R. Britton	July/2009
Proj. Engr.	L. Barela	Aug/2009

Expires 03-31-2011

HDR Engineering, Inc.
5210 East Williams Circle, Suite 530
Tucson, AZ 85711-4459
(520) 584-3600

LA CHOLLA BLVD.
RUTHRAUFF RD. TO RIVER RD.
DEMOLITION PLANS FOR
LA CHOLLA BLVD.

Scales	Horiz. 1"=40' Vert. 1"=NA	Sheet DEM1 of DEM10	Page 21 of 356

012145
00000000000059914
Pima_County_Dept_of_Transportation\PC001-La_Cholla_Blvd-Ruthrauff\13.00_CAD\Construction_Documents\Civil\DBC-01.dgn

08\20\09 4:45:40 PM aledesma

Project # 4LCITR

Notes:

1. See plan sheets from other plan series for additional demolition information:
   - A) Bike Plans See BP11 to BP12
   - B) Storm Drain Plans See SD14 & SD15
   - C) Storm Drain Details See DD9, DD10 and DD12
   - D) Water Plans See W2 to W11
   - E) Signing and Striping Plans See T1, T6 to T13
   - F) Traffic Signal Plans See SL1
   - G) Landscape Plans See N1 to N8, DP1 to DP6
   - H) Bridge Plans See S3, S5, S12, S14 to S17
2. Privately owned items, such as signs and advertising, removed from within the Right-of-Way limits shall be returned to their proper owner after removal.

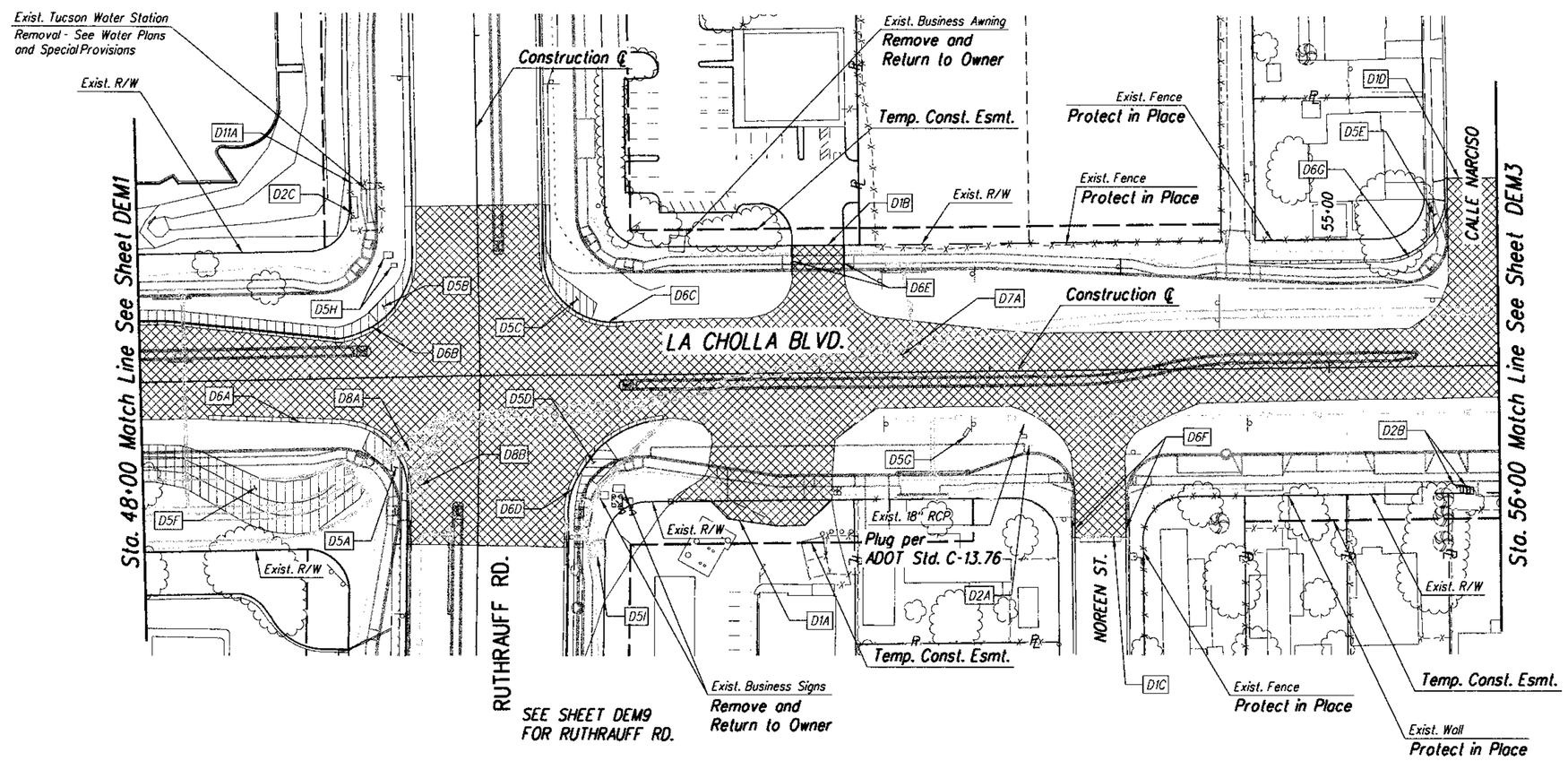

Item No.	Qty.	Unit	Description
D1	194	L.F.	Sawcut Pavement
A	105	L.F.	Sta. 51+12.59, 75' Rt. to Sta. 51+35.00, 75' Rt. to Sta. 51+45.00, 85.49' Rt. to Sta. 51+73.17, 90' Rt. to Sta. 51+90.00, 90' Rt. to Sta. 52+06.40, 75' Rt.
B	30	L.F.	Sta. 51+84.47, 75' Lt. to Sta. 52+14.63, 75' Lt.
C	30	L.F.	Sta. 53+49.35, 98.59' Rt. to Sta. 53+79.24, 98.61' Rt.
D	29	L.F.	Sta. 55+70.67, 109.93' Lt. to Sta. 56+00.00, 110.05' Lt.
D2	5	Ea.	Removal of Structures & Obstructions
A	1	Ea.	Remove Catch Basin-Sta. 53+20.00, 38.5' Rt.
B	3	Ea.	Remove Mailbox-Sta. 55+75.00, 70' Rt.
C	1	Ea.	Remove Booster Station-Sta. 49+28.00, 100' Lt. See Special Provisions
D5	6437	S.F.	Removal of Misc. Concrete
A	481	S.F.	Remove Sidewalk-Sta. 49+34.62, 31.31' Rt. to Sta. 49+50.95, 98.22' Rt.
B	1251	S.F.	Remove Sidewalk-Sta. 48+00.00, 36.23' Lt. to Sta. 49+61.91, 100.22' Lt.
C	498	S.F.	Remove Sidewalk-Sta. 50+37.99, 100.27' Lt. to Sta. 50+66.17, 33.08' Lt.
D	474	S.F.	Remove Sidewalk-Sta. 50+54.29, 101.39' Rt. to Sta. 50+73.76, 40.15' Rt.
E	87	S.F.	Remove Sidewalk-Sta. 55+85.35, 74.20' Lt. to Sta. 55+62.19, 98.04' Lt.
F	3526	S.F.	Remove Conc. Drainage Channel-Sta. 48+00.00, 36.47' Rt. to Sta. 49+18.98, 49.96' Rt.
G	10	S.F.	Remove Bus Shelter-Sta. 52+86.16, 35.67' Rt.
H	29	S.F.	Remove Conc. Pads-Sta. 49+44.97, 70' Lt.
I	81	S.F.	Remove Catch Basin Apron-Sta. 50+67.65, 102.27' Rt.
D6	843	L.F.	Removal of Curb
A	174	L.F.	Remove Curb & Gutter-Sta. 48+39.59, 20.04' Rt. to Sta. 49+57.10, 98.45' Rt.
B	228	L.F.	Remove Curb & Gutter-Sta. 48+00.00, 35.73' Lt. to Sta. 49+64.51, 100.21' Lt.
C	100	L.F.	Remove Curb & Gutter-Sta. 50+35.39, 100.25' Lt. to Sta. 50+84.67, 30.89' Lt.
D	107	L.F.	Remove Curb & Gutter-Sta. 50+48.42, 101.24' Lt. to Sta. 51+07.58, 26.09' Rt.
E	36	L.F.	Remove Conc. Header-Sta. 51+84.05, 57.72' Lt. to Sta. 51+84.20, 75' Lt. Sta. 52+14.77, 57.03' Lt. to Sta. 52+14.63, 75' Lt.
F	48	L.F.	Remove Conc. Wedge Curb-Sta. 53+47.32, 74.53' Rt. to Sta. 53+47.35, 98.59' Rt. Sta. 53+79.23, 99.60' Rt. to Sta. 53+79.37, 74.98' Rt.
G	150	L.F.	Remove Conc. Wedge Curb-Sta. 54+53.74, 63.15' Lt. to Sta. 55+70.64, 109.93' Lt.
D7	7251	S.Y.	Removal of Bituminous Pavement
A	7251	S.Y.	Sta. 48+00.00, to Sta. 56+00.00, Lt. & Rt.
D8	45	L.F.	Removal of Pipe
A	30	L.F.	Remove 60" RCP-Sta. 49+44.13, 46.41' Rt. to Sta. 49+72.59, 40.22' Rt.
B	15	L.F.	Remove 54" RCP-Sta. 100+44.44, 38.37' Rt. to Sta. 100+59.19, 35.50', Rt.
D11	92	L.F.	Removal of Fence
A	92	L.F.	Sta. 49+26.29, 115' Lt. to Sta. 49+44.58, 114', Lt.

40 0 40 80

Arizona Blue Stake
1-800-STAKE-IT
1-800-782-5348
Call Two Working Days Before You Dig

Priscilla S. Cornelio, P.E., Director

		Date
Designed	L. Barela/J. Bennett	July/2009
Drawn	A. Lebsack/M. Cross	July/2009
Checked	R. Brittain	July/2009
Proj. Engr.	L. Barela	Aug/2009

No.	Revision Description	Engineer	Date

Expires 03-31-2011

HDR Engineering, Inc.
5210 East Williams Circle, Suite 530
Tucson, AZ 85711-4459
(520) 584-3600

Pima County Department of Transportation

LA CHOLLA BLVD.
RUTHRAUFF RD. TO RIVER RD.
DEMOLITION PLANS FOR
LA CHOLLA BLVD.

Scales	Horiz. 1"=40' Vert. 1"=NA	Sheet DEM2 of DEM10	Page 22 of 356

012145
0000000005991 4
Pima_County_Dept_of_Transportation\PCDOT-La_Cholla_Blvd-Ruthrauff\13.00_CAD\Construction_Documents\Civil\08C-02.dgn

08\20\09 4:45:45 PM aledesma

Project # 4LCITR

Notes:

1. See plan sheets from other plan series for additional demolition information:
   - A) Bike Plans See BP11 to BP12
   - B) Storm Drain Plans See SD14 & SD15
   - C) Storm Drain Details See DD9, DD10 and DD12
   - D) Water Plans See W2 to W11
   - E) Signing and Striping Plans See T1, T6 to T13
   - F) Traffic Signal Plans See SL1
   - G) Landscape Plans See N1 to N8, DP1 to DP6
   - H) Bridge Plans See S3, S5, S12, S14 to S17

2. Privately owned items, such as signs and advertising, removed from within the Right-of-Way limits shall be returned to their proper owner after removal.

3. Return removed mailboxes to their respectective owners.

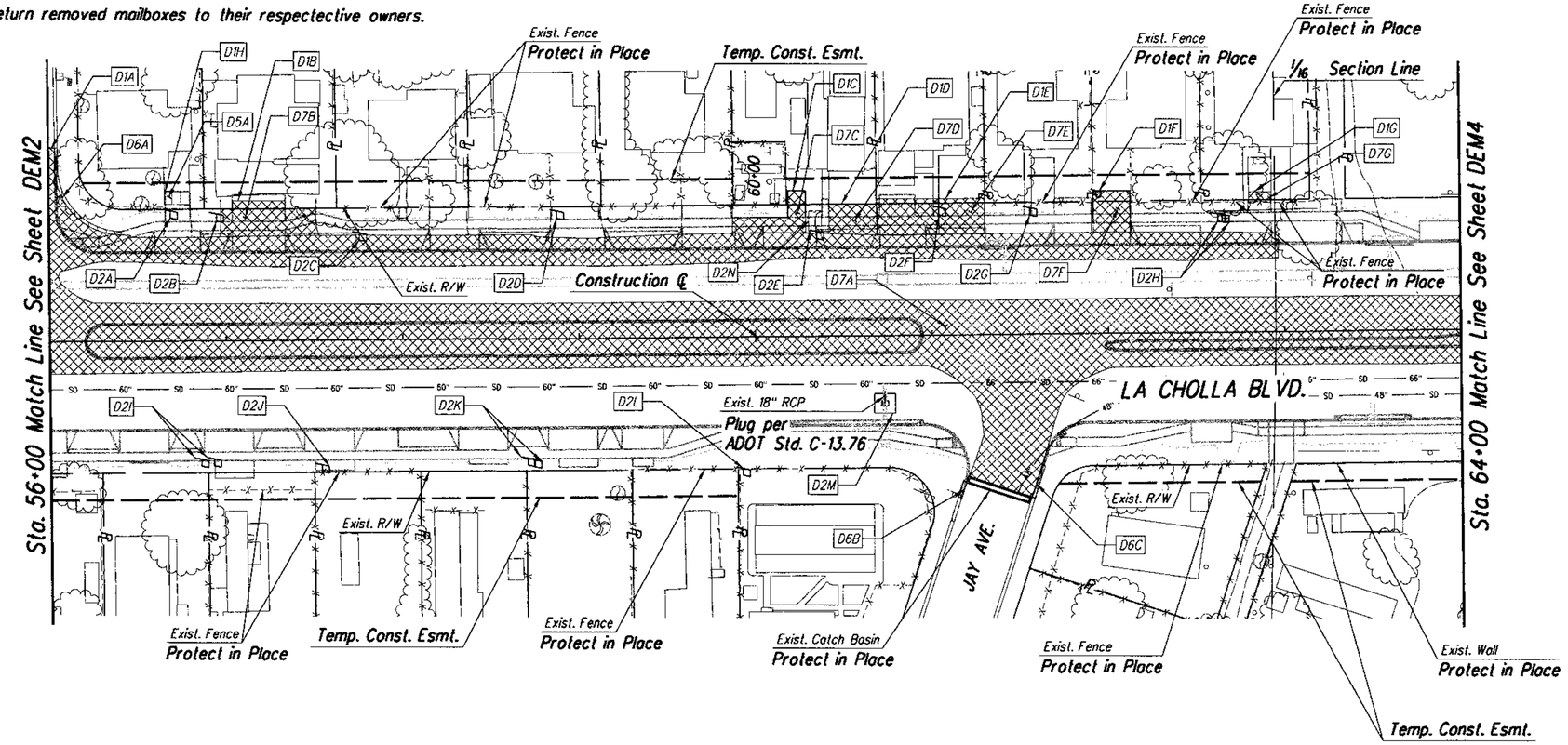

Item No.	Qty.	Unit	Description
D1	224	L.F.	Sawcut Pavement
A	4	L.F.	Sta. 56+00.00, 110.05' Lt. to Sta. 56+03.52, 110.07' Lt.
B	63	L.F.	Sta. 56+97.34, 79.5' Lt. to Sta. 57+51.64, 79.5' Lt.
C	56	L.F.	Sta. 59+87.51, 68.00' Lt. to Sta. 60+19.00, 68' Lt. to Sta. 60+19.00, 83.00' Lt. to Sta. 60+29.00, 83', Lt.
D	27	L.F.	Sta. 60+42.34, 83.5' Lt. to Sta. 60+68.97, 83.5' Lt.
E	26	L.F.	Sta. 61+04.57, 77.5' Lt. to Sta. 61+30.36, 77.5' Lt.
F	21	L.F.	Sta. 61+92.00, 81' Lt. to Sta. 62+13.00, 81' Lt.
G	13	L.F.	Sta. 62+80.14, 79.5' Lt. to Sta. 62+93.09, 79.5' Lt.
H	14	L.F.	Sta. 56+66.00, 85' Lt. to Sta. 56+79.96, 85' Lt.
D2	17	Ea.	Removal of Structures & Obstructions
A	1	Ea.	Remove Mailbox Sta. 56+75.00, 75' Lt.
B	1	Ea.	Remove Mailbox Sta. 56+91.00, 73' Lt.
C	1	Ea.	Remove Mailbox Sta. 57+72.00, 62' Lt.
D	1	Ea.	Remove Mailbox Sta. 58+84.00, 74' Lt.
E	1	Ea.	Remove Mailbox Sta. 60+31.00, 61' Lt.
F	1	Ea.	Remove Mailbox Sta. 61+01.00, 73' Lt.
G	1	Ea.	Remove Mailbox Sta. 61+52.00, 73' Lt.
H	2	Ea.	Remove Mailbox Sta. 62+61.00, 68' Lt.
I	2	Ea.	Remove Mailbox Sta. 56+87.00, 66' Rt.
J	1	Ea.	Remove Mailbox Sta. 57+50.00, 70' Rt.
K	2	Ea.	Remove Mailbox Sta. 58+70.00, 68' Rt.
L	1	Ea.	Remove Mailbox Sta. 59+88.00, 74' Rt.
M	1	Ea.	Remove Catch Basin Sta. 60+73.00, 38.5' Rt.
N	1	Ea.	Remove Masonry Wall Planter Sta. 60+30.60, 60' Lt. to Sta. 60+37.90, 71.4' Lt.
D5	107	S.F.	Removal of Misc. Concrete
A	107	S.F.	Remove Concrete Driveway Sta. 56+65.68, 77.65' Lt. to Sta. 56+79.96, 85' Lt.
D6	113	L.F.	Removal of Curb
A	70	L.F.	Remove Wedge Curb Sta. 56+03.64, 110.07' Lt. to Sta. 56+40.98, 60.70' Lt.
B	24	L.F.	Remove Wedge Curb Sta. 61+11.46, 105.67' Rt. to Sta. 61+18.93, 83.44' Rt.
C	19	L.F.	Remove Wedge Curb Sta. 61+55.86, 92.36' Rt. to Sta. 61+61.91, 74.28' Rt.
D7	5411	S.Y.	Removal of Bituminous Pavement
A	5075	S.Y.	Sta. 56+00.00 to Sta. 64+00.00, Lt. & Rt.
B	108	S.Y.	Sta. 56+96.88, 59.33' Lt. to Sta. 57+53.15, 59.85' Lt.
C	57	S.Y.	Sta. 59+87.45, 59.27' Lt. to Sta. 60+38.24, 58.69' Lt.
D	52	S.Y.	Sta. 60+42.17, 59.05' Lt. to Sta. 60+69.52, 57.56' Lt.
E	57	S.Y.	Sta. 61+04.41, 57.43' Lt. to Sta. 61+29.96, 57.65' Lt.
F	54	S.Y.	Sta. 61+92.00, 57.69' Lt. to Sta. 62+13.00, 57.65' Lt.
G	8	S.Y.	Sta. 62+80.41, 74.02' Lt. to Sta. 62+93.01, 73.64' Lt.

40 0 40 80

Arizona Blue Stake
1-800-STAKE-IT
1-800-782-5348
Call Two Working Days Before You Dig

Priscilla S. Cornelio, P.E., Director

Pima County Department of Transportation

		Date
Designed	L. Barela/J. Bennett	July/2009
Drawn	A. Ledesma/J. Solo	July/2009
Checked	R. Britton	July/2009
Proj. Engr.	L. Barela	Aug/2009

No.	Revision Description	Engineer	Date

Professional Engineer (Civil) LUIS A. BARELA 37267 Date Signed 8-24-09 ARIZONA, U.S.A.
Expires 03-31-2011

HDR Engineering, Inc.
5210 East Williams Circle, Suite 530
Tucson, AZ 85711-4459
(520) 594-3600

LA CHOLLA BL VD.
RUTHRAUFF RD. TO RIVER RD.
DEMOLITION PLANS FOR
LA CHOLLA BL VD.

Scales	Horiz. 1"=40' Vert. 1"=NA	Sheet DEM3 of DEM10	Page 23 of 356

012145
0000000000059914
Pima_County_Dept._of_Transportation\PCDOT-La_Cholla_Blvd-Ruthrauff\13.00_CAD\Construction_Documents\Civil\08C-03.dgn

Notes:

1. See plan sheets from other plan series for additional demolition information:
   - A) Bike Plans See BP11 to BP12
   - B) Storm Drain Plans See SD14 & SD15
   - C) Storm Drain Details See DD9, DD10 and DD12
   - D) Water Plans See W2 to W11
   - E) Signing and Striping Plans See T1, T6 to T13
   - F) Traffic Signal Plans See SL1
   - G) Landscape Plans See N1 to N8, DP1 to DP6
   - H) Bridge Plans See S3, S5, S12, S14 to S17

2. Privately owned items, such as signs and advertising, removed from within the Right-of-Way limits shall be returned to their proper owner after removal.

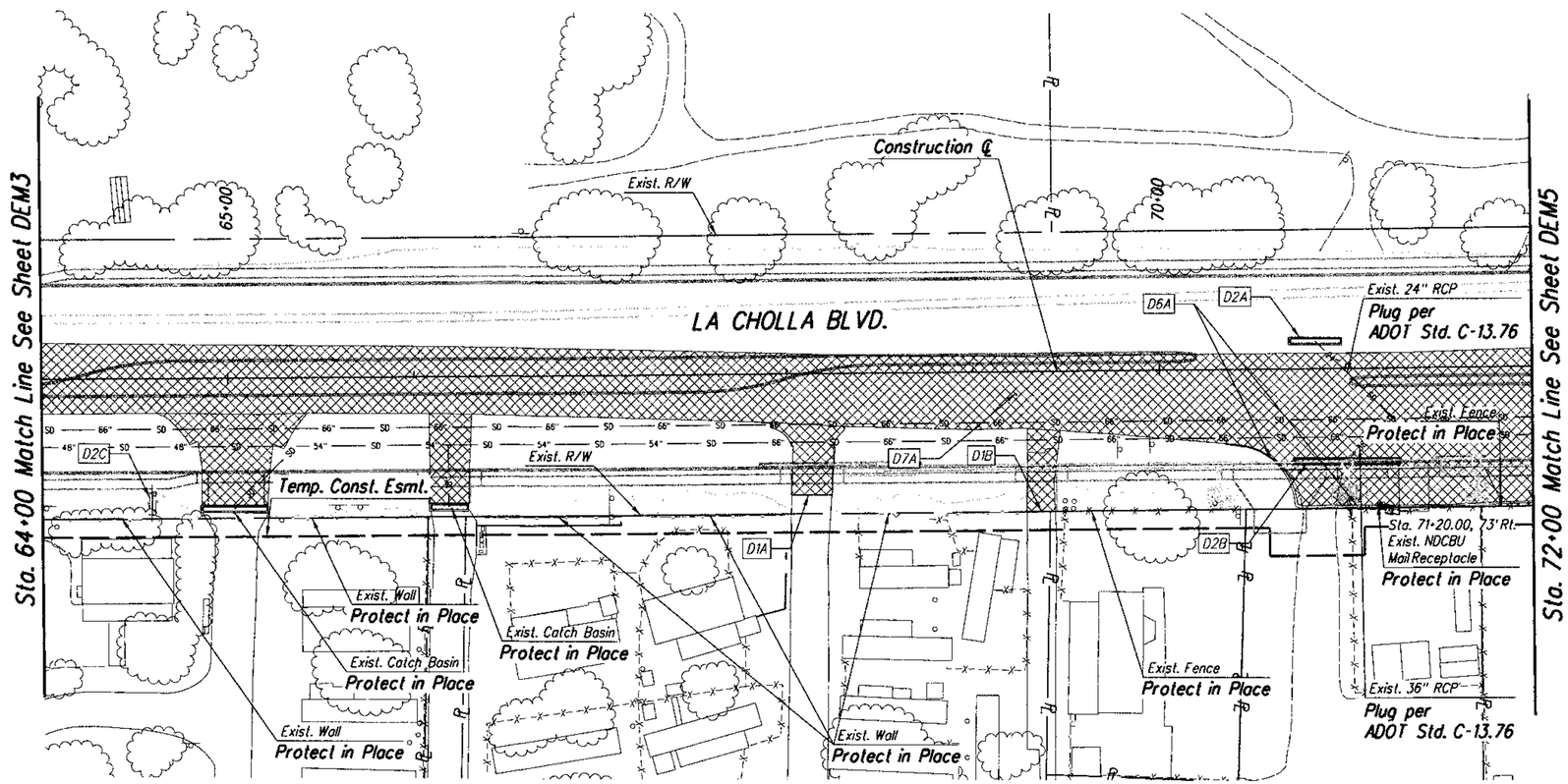

Item No.	Qty.	Unit	Description
D1	37	L.F.	Sawcut Pavement
A	22	L.F.	Sta. 68+02.14, 65' Rt. to Sta. 68+23.56, 65' Rt.
B	15	L.F.	Sta. 69+28.28, 75' Rt. to Sta. 69+43.45, 75' Rt.
D2	3	Ea.	Removal of Structures & Obstructions
A	1	Ea.	Remove Catch Basin Sta. 70+84.33, 15.11' Lt.
B	1	Ea.	Remove Catch Basin Sta. 71+00.00, 48.88' Rt.
C	1	Ea.	Remove Masonry Wall & Sign Sta. 64+57.50, 61.4' Rt. to Sta. 64+57.00, 73.00' Rt. Return to Owner
D6	179	L.F.	Removal of Curb
A	179	L.F.	Remove Concrete Header Sta. 70+37.78, 40.64' Rt. to sta. 70+73.51, 72.60' Rt. to Sta. 72+00.00, 72.07' Rt.
D7	4643	S.Y.	Removal of Bituminous Pavement
A	4643	S.Y.	Sta. 64+00.00, to Sta. 72+00.00, Lt. & Rt.

40 0 40 80

Arizona Blue Stake
1-800-STAKE-IT
1-800-782-5348
Call Two Working Days Before You Dig

Priscilla S. Cornelio, P.E., Director

No.	Revision Description	Engineer	Date

		Date
Designed	L. Barela/J. Bennett	July/2009
Drawn	A. Ledesma/M. Cross	July/2009
Checked	R. Britton	July/2009
Proj. Engr.	L. Barela	Aug/2009

J. BARELA 37267 ARIZONA, U.S.A.
Expires 03-31-2011

HDR Engineering, Inc.
5210 East Williams Circle, Suite 530
Tucson, AZ 85711-4459
(520) 584-3600

Pima County Department of Transportation

LA CHOLLA BL VD.
RUTHRAUFF RD. TO RIVER RD.
DEMOLITION PLANS FOR
LA CHOLLA BL VD.

Scales	Horiz. 1"=40' Vert. 1"=NA	Sheet DEM4 of DEM10	Page 24 of 356

012145
0000000000059914
Pima_County_Dept_of_Transportation\PCDOT-La_Cholla_Blvd-Ruthrauff\13.00_CAD\Construction_Documents\Civil\08C_04.dgn

08\20\09 4:45:57 PM aledesma

Project • 4LCITR

Notes:

1. See plan sheets from other plan series for additional demolition information:
   - A) Bike Plans See BP11 to BP12
   - B) Storm Drain Plans See SD14 & SD15
   - C) Storm Drain Details See DD9, DD10 and DD12
   - D) Water Plans See W2 to W11
   - E) Signing and Striping Plans See T1, T6 to T13
   - F) Traffic Signal Plans See SL1
   - G) Landscape Plans See N1 to N8, DP1 to DP6
   - H) Bridge Plans See S3, S5, S12, S14 to S17

2. Privately owned items, such as signs and advertising, removed from within the Right-of-Way limits shall be returned to their proper owner after removal.

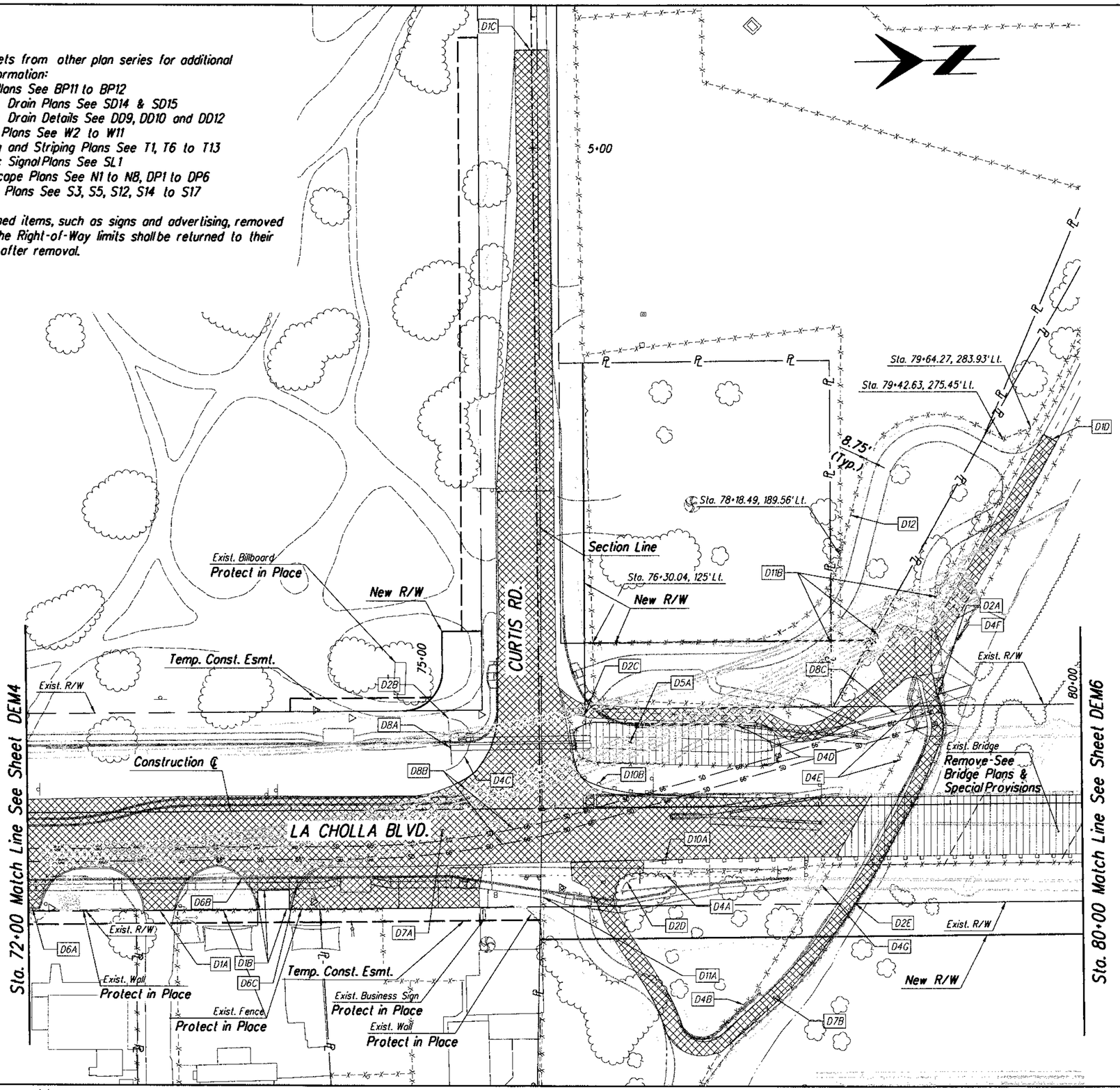

Item No.	Qty.	Unit	Description
D1	115	L.F.	Sawcut Pavement
A	24	L.F.	Sta. 72+87.93, 75' Rt. to Sta. 73+11.55, 75' Rt.
B	55	L.F.	Sta. 73+73.76, 75' Rt. to Sta. 73+76.76, 60' Rt. to Sta. 73+98.00, 60' Rt. to Sta. 73+98.91, 75' Rt.
C	24	L.F.	Sta. 4+25.00, 12.75' Rt. to Sta. 4+25.00, 11.5' Lt.
D	12	L.F.	Sta. 79+73.75, 278.62' Lt. to Sta. 79+83.58, 273.62' Lt.
D2	4	Ea.	Removal of Structures & Obstructions
A	1	Ea.	Remove Drainage Headwall Sta. 78+92.84, 80.50' Lt.
B	1	Ea.	Remove Drainage Headwall Sta. 75+21.83, 50' Lt.
C	1	Ea.	Remove Gate Sta. 76+23.24, 73.58' Lt.
D	1	Ea.	Remove Conc. Wall Sta. 76+54.00, 56' Rt.
E	531	C.Y.	Remove Soil Cement Sta. 3+60.00 to Sta. 7+86.00. See Bike Path Plans Sheets BP11 - BP12 for additional information.
D4	1256	L.F.	Removal of Handrail
A	116	L.F.	Sta. 76+66.68, 50.21' Rt. to Bridge
B	43	L.F.	Sta. 77+23.27, 168.85' Rt. to Sta. 77+52.97, 138.20' Lt.
C	58	L.F.	Sta. 75+17.66, 29.61' Lt to Sta. 75+20.13, 68.84' Lt
D	351	L.F.	Sta. 76+14.72, 51.15' Lt. to Sta. 77+71.56. 44.52' Lt.
E	90	L.F.	Sta. 78+43.94, 7.55' Lt to Sta. 78+80.09, 67.45' Lt to Sta. 78+76.28, 86.62' Lt.
F	574	L.F.	Sta. 77+07.48, 212.61' Rt. to Sta. 79+89.33, 269.90' Lt.
G	24	L.F.	Sta. 78+10.74, 44.90' Rt. to Sta. 77+98.27, 65.21' Rt.
D5	4611	S.F.	Removal of Misc. Concrete
A	4611	S.F.	Sta. 76+14.72, 51.15' Lt. to Sta. 77+71.56, 44.52' Lt.
D6	268	L.F.	Removal of Curb
A	124	L.F.	Remove Concrete Header Sta. 72+00.00, 72.36' Rt. to Sta. 72+08.34, 72.11' Rt to Sta. 72+87.93, 75' Rt.
B	99	L.F.	Remove Concrete Header Sta. 73+11.63, 72.83' Rt. to Sta. 73+73.76, 75' Rt.
C	45	L.F.	Remove Concrete Header Sta. 73+98.91, 75' Rt. to Sta. 74+23.84, 41.23' Rt.
D7	8148	S.Y.	Removal of Bituminous Pavement
A	6756	S.Y.	Sta. 72+00.00, to Sta. 80+00.00, Lt. & Rt.
B	1392	S.Y.	Sta. 76+11.74, 40.88' Rt. to Sta. 78+72.18, 0' Lt, Sta. 76+10.33, 67.71' Lt. to Sta. 79+58.66, 232.09 Lt.
D8	1747	L.F.	Remove Pipes
A	214	L.F.	Remove 2-48" CMP-Sta. 75+21.71, 44.41' Lt. to Sta. 76+28.19, 45.09' Lt
B	1400	L.F.	Remove 2-66" RCP-Sta. 72+00.00, 27.25' Lt to Sta. 78+91.91, 71.72' Lt
C	133	L.F.	Remove 48" RCP-Sta. 77+64.66, 45.32' Lt to Sta. 78+92.84, 80.50' Lt.
D10	401	L.F.	Removal of Guardrail
A	142	L.F.	Sta. 76+71.13, 40.93' Rt. to Sta. 78+13.35, 38.69' Rt.
B	259	L.F.	Sta. 76+12.99, 66.86' Rt. to Sta. 78+39.27, 6.05' Lt
D11	1169	L.F.	Removal of Fence
A	91	L.F.	Sta. 75+90.62, 97.03' Rt. to sta. 76+30.98, 91.49' Rt.
B	1078	L.F.	Sta. 76+30.77, 82.23' Lt. to Sta. 79+73.90, 2.88' Lt.
D12	440	L.F.	Sta. 76+30.04, 125' Lt. to Sta. 79+64.27, 283.93' Lt. Relocate Existing Chain Link Fence from D11B

40 0 40 80

Arizona Blue Stake
1-800-STAKE-IT
1-800-782-5348
Call Two Working Days Before You Dig

Priscilla S. Cornelio, P.E., Director

Pima County Department of Transportation

No.	Revision Description	Engineer	Date

		Date
Designed	L. Barela/J. Bennett	July 2009
Drawn	A. Ledesma/J. Solo	July 2009
Checked	R. Brittain	July 2009
Proj. Engr.	L. Barela	Aug. 2009

Registered Professional Engineer (Civil) Luis Barela 37267 Date Signed 8-24-09 Arizona, U.S.A.
Expires 03-31-2011

HDR Engineering, Inc.
5210 East Williams Circle, Suite 530
Tucson, AZ 85711-4459
(520) 584-3600

LA CHOLLA BL VD.
RUTHRAUFF RD. TO RIVER RD.
DEMOLITION PLANS
FOR LA CHOLLA BL VD.

Scales	Horiz. 1"=40' Vert. 1"=NA	Sheet DEM5 of DEM10	Page 25 of 356

012145
0000000000059914
Pima_County_Dept_of_Transportation\PCDOT-La_Cholla_Blvd-Ruthrauff\13.00_CAD\Construction_Documents\Civil\DBC 05.dgn

08\20\09 4:46:02 PM aledesma

Project # 4LCITR

Notes:

1. See plan sheets from other plan series for additional demolition information:
   - A) Bike Plans See BP11 to BP12
   - B) Storm Drain Plans See SD14 & SD15
   - C) Storm Drain Details See DD9, DD10 and DD12
   - D) Water Plans See W2 to W11
   - E) Signing and Striping Plans See T1, T6 to T13
   - F) Traffic Signal Plans See SL1
   - G) Landscape Plans See N1 to N8, DP1 to DP6
   - H) Bridge Plans See S3, S5, S12, S14 to S17

2. Privately owned items, such as signs and advertising, removed from within the Right-of-Way limits shall be returned to their proper owner after removal.

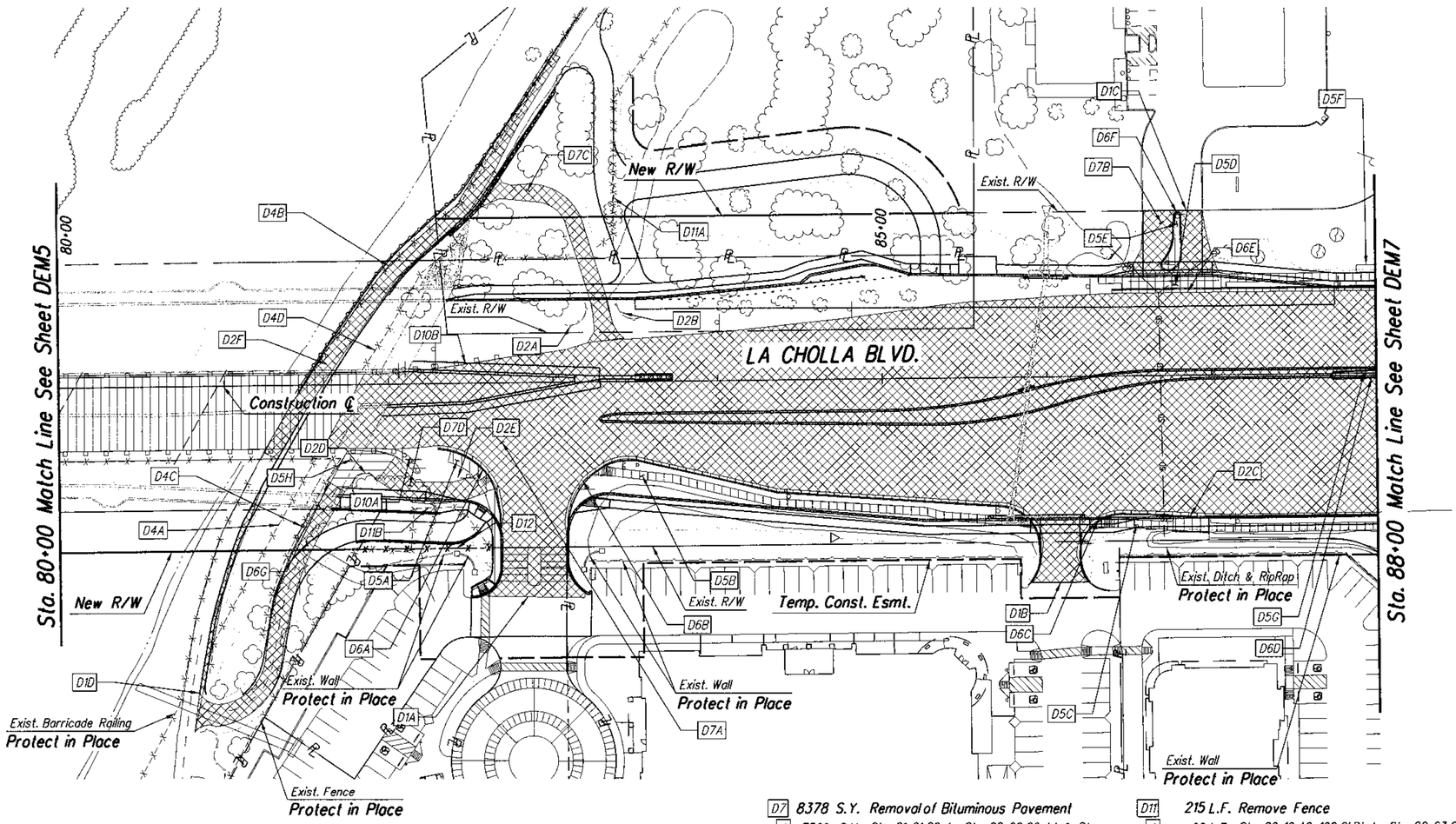

Item No.	Qty.	Unit	Description
D1	355	L.F.	**Sawcut Pavement**
A	64	L.F.	Sta. 82+59.13, 129.26' Rt. to Sta. 83+17.86, 130.76' Rt.
B	35	L.F.	Sta. 85+89.03, 124.5' Rt. to Sta. 86+23.92, 124.5' Rt.
C	36	L.F.	Sta. 86+59.40, 100' Lt. to Sta. 86+95.10, 100' Lt.
D	220	L.F.	Sta. 81+40.16, 12.62' Rt. to Sta. 81+47.15, 16.97' Rt. to Sta. 80+77.64, 209.30' Rt. to Sta. 80+79.94, 209.65' Rt
D2	5	Ea.	**Removal of Structures & Obstructions**
A	1	Ea.	Remove Concrete Wall-Sta. 83+07.49, 34.91' Lt. to Sta. 83+19.79, 48' Lt.
B	1	Ea.	Remove Concrete Wall-Sta. 83+39.20, 50.41' Lt. to Sta. 83+53.20, 39.01' Lt.
C	1	Ea.	Remove Scupper & Spillway-Sta. 86+86.77, 86' Rt.
D	1	Ea.	Remove Concrete Wall Sta. 81+68.25, 72.8' Rt. to Sta. 81+92.81, 60.5' Rt.
E	1	Ea.	Remove Post Barricade-Sta. 82+50.00, 63' Rt.
F	191	C.Y.	Remove Soil Cement Sta. 1+20.00 to Sta. 5+65. See Bike Plan Sheets BP11 - BP12 for additional information.
D4	787	L.F.	**Handrail Removal**
A	146	L.F.	Sta. 80+63.03, 207.78' Rt. to Sta. 81+16.15, 54.90' Rt.
B	286	L.F.	Sta. 81+40.16, 12.62' Rt. to Sta. 82+92.60, 183.61' Lt.
C	55	L.F.	Sta. 81+42.58 92.82' Rt. to Sta 81+70.34, 44.80' Rt.
D	300	L.F.	Sta. 81+84.05, 8.56' Lt. to Sta. 83+13.37, 75.82' Lt.
D5	4778	S.F.	**Removal of Misc. Concrete**
A	554	S.F.	Remove Sidewalk-Sta. 82+37.27, 41.34' Rt. to Sta. 82+49.65, 129.52' Rt.
B	1289	S.F.	Remove Sidewalk-Sta. 83+35.56, 52.29' Rt. to Sta. 85+81.89, 84.93' Rt.
C	951	S.F.	Remove Sidewalk-Sta. 86+39.90, 86.5' Rt. to Sta. 88+00.00, 90.27' Rt.
D	1109	S.F.	Remove Sidewalk-Sta. 86+31.82, 56.04' Lt. to Sta. 88+00.00, 56.18' Lt.
E	173	S.F.	Remove Concrete-Sta. 86+69.70, 67.02' Lt. to Sta. 86+82.53, 72.21' Lt.
F	94	S.F.	Remove Bus Shelter-Sta. 87+88.55, 61.24' Lt. to Sta. 88+00.00, 61.19' Lt.
G	88	S.F.	Remove Median-Sta. 87+72.55, 1.15' Rt. to Sta. 88+00.00, 2.76' Rt.
H	520	S.F.	Remove Conc. & Brick Pavers-Sta. 81+64.00, 59.5' Rt. to Sta. 82+04.00, 43.7' Rt.
D6	1109	L.F.	**Removal of Curb**
A	121	L.F.	Remove Curb & Gutter-Sta. 82+29.48, 39.61' Rt. to Sta. 82+49.77, 130.19' Rt.
B	394	L.F.	Remove Curb & Gutter-Sta. 83+17.94, 127.83' Rt. to Sta. 85+87.07, 125.82' Rt.
C	203	L.F.	Remove Curb & Gutter-Sta. 86+36.45, 130.28' Rt. to Sta. 88+00.00, 86.88' Rt.
D	58	L.F.	Remove Curb-Sta. 87+72.55, 1.15' Rt. to Sta. 88+00.00, 2.76' Rt.
E	160	L.F.	Remove Curb & Gutter-Sta. 86+39.94, 52.28' Rt. to Sta. 88+00.00, 52.47' Rt.
F	83	L.F.	Remove Curb-Sta. 86+69.70, 67.02' Rt. to Sta. 86+82.53, 72.21' Rt.
G	90	L.F.	Remove Header-Sta. 81+64.00, 59.5' Rt. to Sta. 82+04.00, 43.7' Rt.
D7	8378	S.Y.	**Removal of Bituminous Pavement**
A	7529	S.Y.	Sta. 81+81.86, to Sta. 88+00.00, Lt. & Rt.
B	150	S.Y.	Sta. 86+49.82, 62.30' Lt to Sta. 87+05.00, 62.23' Lt.
C	619	S.Y.	Sta. 80+70.01, 209.35' Rt. to Sta. 83+00.93, 199.37' Lt.
D	90	S.Y.	Sta. 81+92.70, 58.3' Rt. to Sta. 82+57.50, 66.6' Rt.
D10	158	L.F.	**Remove Guardrail**
A	66	L.F.	Sta. 81+59.68, 38.65' Rt. to Sta. 82+18.96, 53.85' Rt.
B	92	L.F.	Sta. 81+85.47, 6.30' Lt to Sta. 82+77.26, 15.95' Lt.
D11	215	L.F.	**Remove Fence**
A	90	L.F.	Sta. 82+12.42, 102.2' Rt. to Sta. 82+63.00, 101.2' Rt.
B	125	L.F.	Sta. 81+80.07, 98.99' Rt. to Sta. 82+62.98, 101.01' Rt.
D12	82	L.F.	**Sta. 81+79.49, 100' Rt. to Sta. 82+61.46, 100' Rt. Relocate Fence from D11B**

40 0 40 80

Arizona Blue Stake
1-800-STAKE-IT
1-800-782-5348
Call Two Working Days Before You Dig

Scales: Horiz. 1"=40' Vert. 1"=NA

Sheet DEM6 of DEM10 Page 26 of 356

Pima County Department of Transportation

Priscilla S. Cornelio, P.E., Director

No.	Revision Description	Engineer	Date

		Date
Designed	L. Barela/J. Bennett	July/2009
Drawn	A. Ledesma/M. Cross	July/2009
Checked	R. Brittain	July/2009
Proj. Engr.	L. Barela	Aug/2009

Registered Professional Engineer (Civil) No. 37287 L.J. BARELA Date Signed 8-1-09 ARIZONA, U.S.A.
Expires 03-31-2011

HDR Engineering, Inc
4500 E. Broadway Blvd. Circle, Suite 530
Tucson, AZ 85711-4459
(520) 584-3600

LA CHOLLA BLVD.
RUTHRAUFF RD. TO RIVER RD.
DEMOLITION PLANS
FOR LA CHOLLA BLVD.

Project # 4LCITR

012145
0000000000589H4
Pima_County_Dept_of_Transportation\PCDOT-La_Cholla_Blvd-Ruthrauff\13.00_CAD\Construction_Documents\Civil\080-06.dgn

08\31\09 3:50:44 PM aledesma

Notes:

1. See plan sheets from other plan series for additional demolition information:
   - A) Bike Plans See BP11 to BP12
   - B) Storm Drain Plans See SD14 & SD15
   - C) Storm Drain Details See DD9, DD10 and DD12
   - D) Water Plans See W2 to W11
   - E) Signing and Striping Plans See T1, T6 to T13
   - F) Traffic Signal Plans See SL1
   - G) Landscape Plans See N1 to N8, DP1 to DP6
   - H) Bridge Plans See S3, S5, S12, S14 to S17
2. Privately owned items, such as signs and advertising, removed from within the Right-of-Way limits shall be returned to their proper owner after removal.

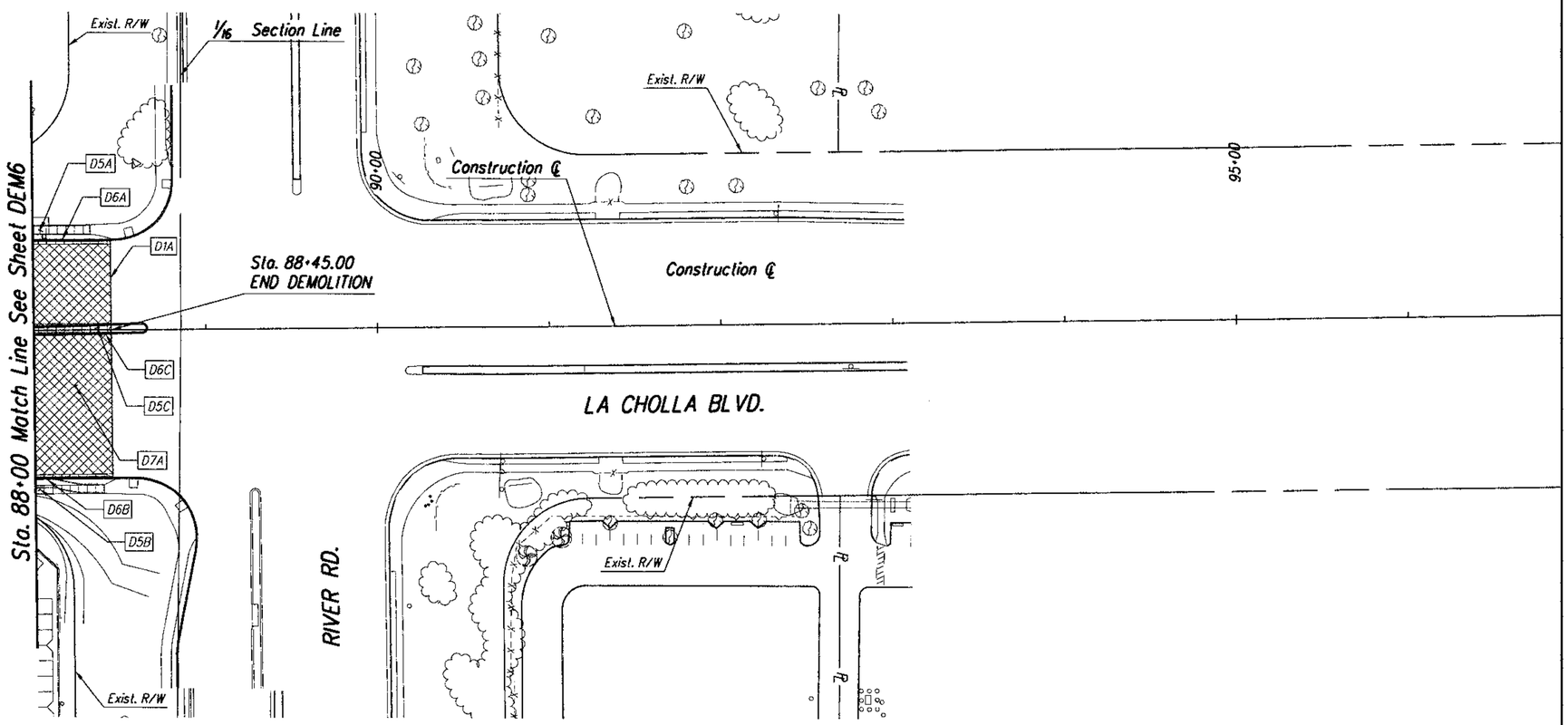

Item No.	Qty.	Unit	Description
D1	138	L.F.	Sawcut Pavement
A	138	L.F.	Sta. 88+45.00, 50.24' Lt. to Sta. 88+45.00, 85.77' Rt.
D5	623	S.F.	Removal of Misc. Concrete
A	169	S.F.	Remove Sidewalk-Sta. 88+00.00, 56' Lt. to Sta. 88+33.32, 56' Lt.
B	198	S.F.	Remove Sidewalk-Sta. 88+00.00, 90.27' Rt. to Sta. 88+40.00, 90' Rt.
C	256	S.F.	Remove Median-Sta. 88+00.00, 2.76' Rt. to Sta. 88+45.00, 2.45' Rt.
D6	180	L.F.	Removal of Curb
A	45	L.F.	Remove Curb & Gutter-Sta. 88+00.00, 52.47' Lt. to Sta. 88+45.00, 52.22' Lt.
B	45	L.F.	Remove Curb & Gutter-Sta. 88+00.00, 85.89' Rt. to Sta. 88+45.00, 85.77' Rt.
C	90	L.F.	Remove Curb & Gutter-Sta. 88+00.00, 2.76' Rt. to Sta. 88+45.00, 2.45' Rt. Sta. 88+00.00, 1.23' Lt. to Sta. 88+45.00, 3.56' Lt.
D7	643	S.Y.	Removal of Bituminous Pavement
A	643	S.Y.	Sta. 88+00.00 to 88+45.00, Lt. & Rt.

40 0 40 80

Arizona Blue Stake
1-800-STAKE-IT
1-800-782-5348
Call Two Working Days Before You Dig

Scales: Horiz. 1"=40' Vert. 1"=NA

Sheet DEM7 of DEM10

Page 27 of 356

Pima County Department of Transportation

Priscilla S. Cornelio, P.E., Director

No.	Revision Description	Engineer	Date

		Date
Designed	L. Barela/L. Bennett	July/2009
Drawn	A. Ledesma/M. Cross	July/2009
Checked	R. Brittain	July/2009
Proj. Engr.	L. Barela	Aug/2009

Registered Professional Engineer (Civil) Priscilla S. Cornelio 37267 L.C. BARELA Date Signed 8-24-09 ARIZONA, U.S.A.

Expires 03-31-2011

HDR

HDR Engineering, Inc.
5210 East Williams Circle, Suite 530
Tucson, AZ 85711-4459
(520) 584-3600

LA CHOLLA BLVD.
RUTHRAUFF RD. TO RIVER RD.
DEMOLITION PLANS FOR
LA CHOLLA BLVD.

012145
0000000000059914
Pima_County_Dept_of_Transportation\PCDOT-La_Cholla_Blvd-Ruthrauff\13.00_CAD\Construction_Documents\Civil\08C-07.dgn

08\20\09 4:46:16 PM aledesma

Project • 4LCITR

Notes:

1. See plan sheets from other plan series for additional demolition information:
   - A) Bike Plans See BP11 to BP12
   - B) Storm Drain Plans See SD14 & SD15
   - C) Storm Drain Details See DD9, DD10 and DD12
   - D) Water Plans See W2 to W11
   - E) Signing and Striping Plans See T1, T6 to T13
   - F) Traffic Signal Plans See SL1
   - G) Landscape Plans See N1 to N8, DP1 to DP6
   - H) Bridge Plans See S3, S5, S12, S14 to S17

2. Privately owned items, such as signs and advertising, removed from within the Right-of-Way limits shall be returned to their proper owner after removal.

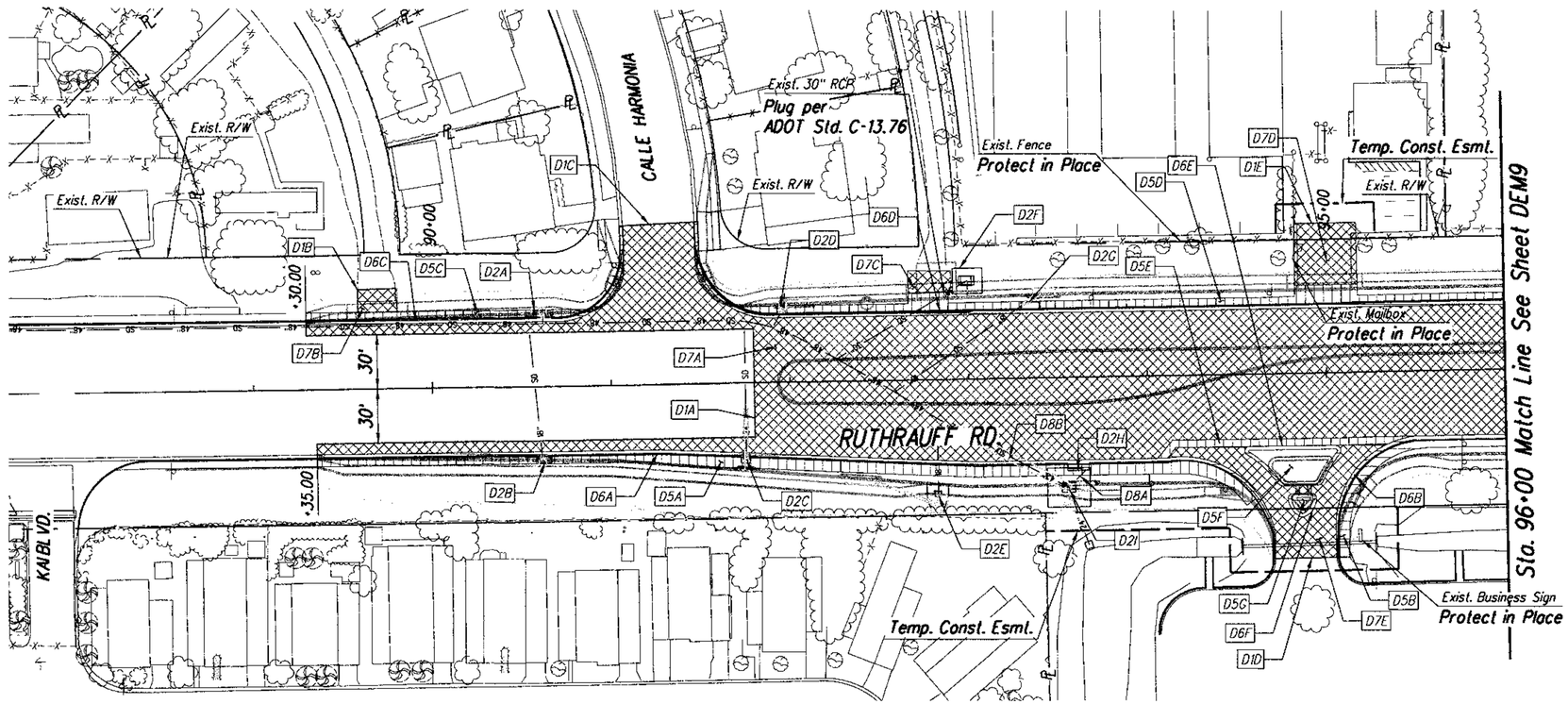

Item No.	Qty.	Unit	Description
D1	702	L.F.	Sawcut Pavement
A	567	L.F.	Sta. 89+35.00, 36' Rt. to Sta. 89+35.00, 30' Rt. to Sta. 91+80.00, 30' Rt. to Sta. 91+80.00, 30' Lt to Sta. 89+30.00, 30' Lt. to Sta. 89+30.00, 36' Lt.
B	21	L.F.	Sta. 89+59.10, 55.18' Lt. to Sta. 89+80.29, 55.61' Lt.
C	40	L.F.	Sta. 91+07.90, 89.30' Lt. to Sta. 91+47.83, 90.74' Lt.
D	34	L.F.	Sta. 94+69.76, 102.52' Rt. to Sta. 95+04.02, 102.52' Rt.
E	40	L.F.	Sta. 94+85.00, 84' Lt. to Sta. 95+17.83, 83.98' Lt.
D2	9	Ea.	Removal of Structures & Obstructions
A	1	Ea.	Remove Catch Basin-Sta. 90+62.88, 40.22' Lt.
B	1	Ea.	Remove Catch Basin-Sta. 90+62.35, 41.06' Rt.
C	1	Ea.	Remove Catch Basin-Sta. 91+74.52, 42.46' Rt.
D	1	Ea.	Remove Catch Basin-Sta. 91+95.79, 40.19' Lt.
E	1	Ea.	Remove Catch Basin-Sta. 92+81.63, 63.04' Rt.
F	1	Ea.	Remove Catch Basin-Sta. 93+00.00, 55' Lt.
G	1	Ea.	Remove Catch Basin-Sta. 93+35.00, 41.35' Lt.
H	1	Ea.	Remove Catch Basin-Sta. 93+60.00, 47.5' Rt.
I	1	Ea.	Remove Catch Basin-Sta. 93+55.00, 61' Rt.
D5	7216	S.F.	Removal of Misc. Concrete
A	2730	S.F.	Remove Sidewalk-Sta. 89+35.00, 38.71' Rt. to Sta. 94+59.05, 69.51' Rt.
B	648	S.F.	Remove Sidewalk-Sta. 95+05.61, 102.51' Rt. to Sta. 96+00.00, 42.49' Rt.
C	581	S.F.	Remove Sidewalk-Sta. 89+30.00, 38.60' Lt. to Sta. 90+87.01, 42.69' Lt.
D	1960	S.F.	Remove Sidewalk-Sta. 91+72.81, 42.74' Lt. to Sta. 96+00.00, 38.95' Lt.
E	561	S.F.	Remove Valley Gutter-Sta. 94+04.86, 45.57' Rt. to Sta. 94+13.39, 35.63' Rt. to Sta. 95+49.15, 35.98' Rt
F	642	S.F.	Remove Median Concrete-Sta. 94+53.80, 41.71' Rt. to Sta. 95+07.38, 42.75' Rt.
G	94	S.F.	Remove Median Concrete-Sta. 94+79.31, 68.34' Rt. to Sta. 94+91.23, 68.39' Rt.
D6	1539	L.F.	Removal of Curb
A	544	L.F.	Remove Curb & Gutter-Sta. 89+35.00, 37.70' Rt. to Sta. 94+69.76, 102.52' Rt.
B	137	L.F.	Remove Curb & Gutter-Sta. 95+04.01, 102.45' Rt. to Sta. 96+00.00, 38.11' Rt.
C	195	L.F.	Remove Curb & Gutter-Sta. 89+30.00, 38.60' Lt. to Sta. 91+07.72, 89.29' Lt.
D	487	L.F.	Remove Curb & Gutter-Sta. 91+47.83, 90.74' Lt. to Sta. 96+00.00, 38.43' Lt.
E	129	L.F.	Remove Wedge Curb-Sta. 94+53.79, 41.78' Rt. to Sta. 95+07.37, 42.64' Rt.
F	47	L.F.	Remove Curb & Gutter-Sta. 94+77.58, 70.30' Rt. to Sta. 94+93.14, 69.75' Rt.
D7	4676	S.Y.	Removal of Bituminous Pavement
A	4217	S.Y.	Sta. 89+30.00 to Sta. 96+00.00, Lt. & Rt.
B	30	S.Y.	Sta. 89+59.11, 42.78' Lt. to Sta. 89+81.07, 42.69' Lt.
C	33	S.Y.	Sta. 92+66.90, 48.55' Lt. to Sta. 92+91.04, 48.19' Lt.
D	136	S.Y.	Sta. 94+83.20, 49.02' Lt. to Sta. 95+18.02, 49.05' Lt.
E	260	S.Y.	Sta. 94+10.27, 45.55' Rt. to Sta. 95+31.74, 40.02' Rt.
D8	82	L.F.	Remove Pipes
A	10	L.F.	Remove 30" RCP Sta. 93+64.33, 51.58' Rt. to Sta. 93+57.73, 58.25' Rt.
B	72	L.F.	Remove 42" RCP Sta. 92+93.78, 27.85' Rt. to Sta. 93+55.00, 61' Rt.

40 0 40 80

Arizona Blue Stake
1-800-STAKE-IT
1-800-782-5348
Call two Working Days Before You Dig

Priscilla S. Cornelio, P.E., Director

		Date
Designed	L. Barela/L. Bennett	July/2009
Drawn	A. Ledesma/M. Cross	July/2009
Checked	R. Britton	July/2009
Proj. Engr.	L. Barela	Aug/2009

No.	Revision Description	Engineer	Date

37267 L. BARELA Expires 03-31-2011

HDR Engineering, Inc.
5210 East Williams Circle, Suite 530
Tucson, AZ 85711-4459
(520) 584-3600

Pima County Department of Transportation

LA CHOLLA BLVD.
RUTHRAUFF RD. TO RIVER RD.
DEMOLITION PLANS FOR
RUTHRAUFF RD.

Scales: Horiz. 1"=40' Vert. 1"=NA | Sheet DEM8 of DEM10 | Page 28 of 356

012145
0000000000059914
Pima_County_Dept._of_Transportation\PCDOT-La_Cholla_Blvd-Ruthrauff\13.00_CAD\Construction_Documents\Civil\08C-08.dgn

08\20\09 4:46:20 PM aledesma

Project • 4LCITR

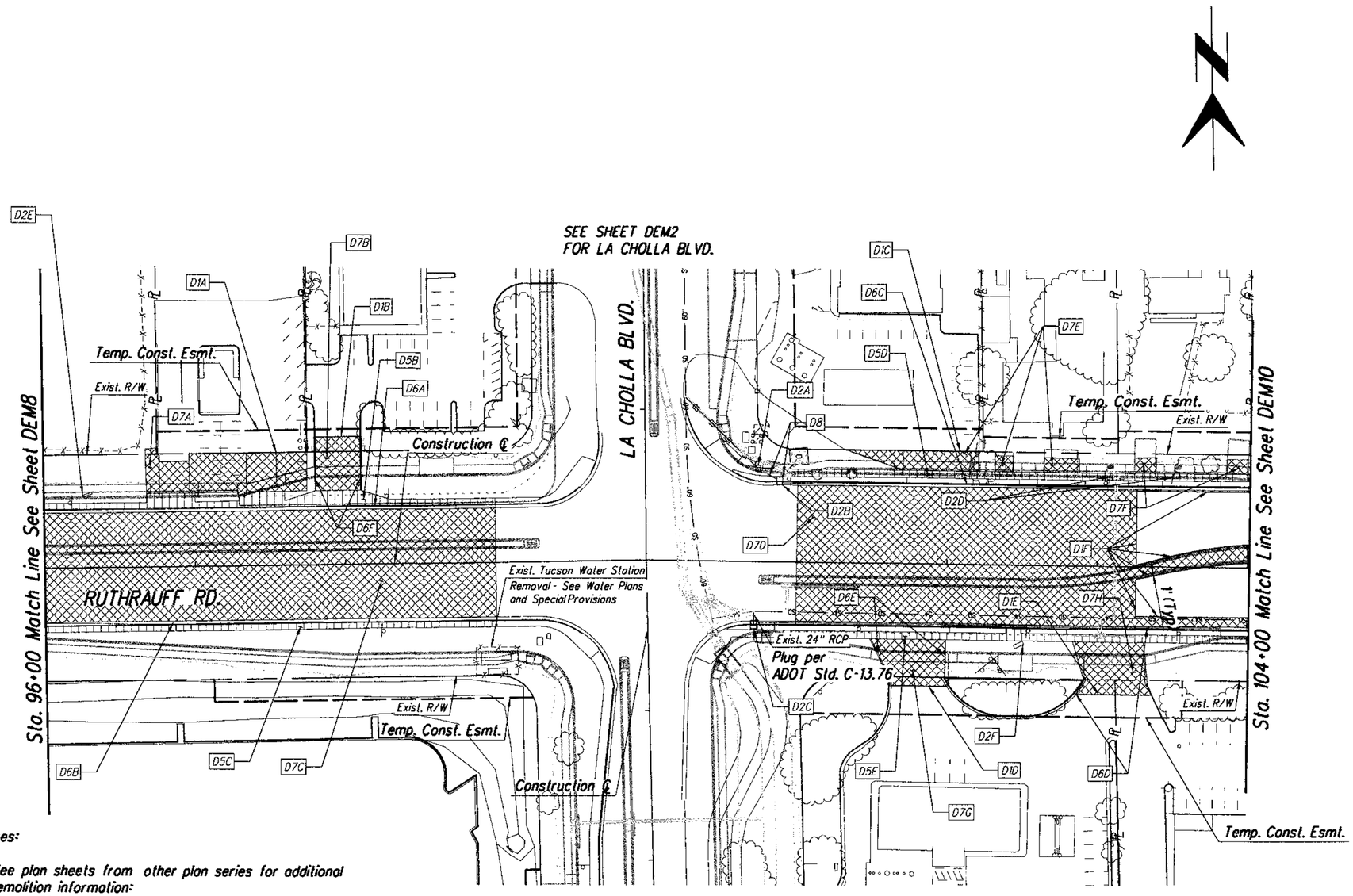

Notes:

1. See plan sheets from other plan series for additional demolition information:
   - A) Bike Plans See BP11 to BP12
   - B) Storm Drain Plans See SD14 & SD15
   - C) Storm Drain Details See DD9, DD10 and DD12
   - D) Water Plans See W2 to W11
   - E) Signing and Striping Plans See T1, T6 to T13
   - F) Traffic Signal Plans See SL1
   - G) Landscape Plans See N1 to N8, DP1 to DP6
   - H) Bridge Plans See S3, S5, S12, S14 to S17
2. Privately owned items, such as signs and advertising, removed from within the Right-of-Way limits shall be returned to their proper owner after removal.

Item No.	Qty.	Unit	Description
D1	703	L.F.	Sawcut Pavement
A	122	L.F.	Sta. 96+67.77, 78.56' Lt to Sta. 97+75.69, 75.01' Lt.
B	30	L.F.	Sta. 97+81.08, 85.02' Lt. to Sta. 98+10.90, 85.02' Lt.
C	89	L.F.	Sta. 101+31.48, 75' Lt. to Sta. 102+20.33, 74.99' Lt.
D	37	L.F.	Sta. 101+64.23, 80.99' Rt. to Sta. 102+01.03, 81.03' Rt.
E	50	L.F.	Sta. 102+87.28, 85.01' Rt. to Sta. 103+37.23, 85' Rt.
F	374	L.F.	Sta. 103+26.00, 51.05' Lt. to Sta. 103+26.00, 33.06' Rt.
D2	7	Ea.	Removal of Structures & Obstructions
A	1	Ea.	Remove Catch Basin Sta 100+62.00, 72' Lt.
B	1	Ea.	Remove Catch Basin Sta 100+96.00, 53' Lt.
C	1	Ea.	Remove Catch Basin Sta. 100+74.00, 42' Rt.
D	2	Ea.	Remove Mailbox Sta. 103+07.00, 55' Lt. & Sta. 103+49.00, 55' Lt.
E	1	Ea.	Remove Bus Shelter-Sta. 96+75.00, 50' Lt.
F	1	Ea.	Remove Bus Shelter-Sta. 101+50.00, 50' Rt.
D5	6076	S.F.	Removal of Misc. Concrete
B	1886	S.F.	Remove Sidewalk-Sta. 95+99.93, 42.85' Lt. to Sta. 99+00.00, 42.72' Lt.
C	1197	S.F.	Remove Sidewalk-Sta. 95+99.94, 42.51' Rt. to Sta. 99+00.02, 42.65' Rt.
D	1490	S.F.	Remove Sidewalk-Sta. 100+99.94, 61.97' Lt. to Sta. 104+01.30, 62.04' Lt.
E	1503	S.F.	Remove Sidewalk-Sta. 101+00.00, 50.13' Rt. to Sta. 104+01.30, 50.17' Rt.
D6	1266	L.F.	Removal of Curb
A	301	L.F.	Remove Curb & Gutter-Sta. 96+00.00, 38.94' Lt. to Sta. 99+00.00, 38.71' Lt.
B	300	L.F.	Remove Curb & Gutter-Sta. 96+00.00, 38.62' Rt. to Sta. 99+00.00, 38.67' Rt.
C	300	L.F.	Remove Curb & Gutter-Sta. 101+00.00, 53.72' Lt. to Sta. 104+01.30, 62.14' Lt.
D	312	L.F.	Remove Curb & Gutter-Sta. 101+00.02, 41.99' Rt. to Sta. 104+01.30, 41.93' Rt.
E	53	L.F.	Remove Concrete Header-Sta. 101+50.24, 50.21' Rt. to Sta. 101+62.99, 75.15' Rt. to Sta. 102+00.00, 75.23' Rt. to Sta.
D7	5722	S.Y.	Removal of Bituminous Pavement
A	304	S.Y.	Sta. 96+67.77, 78.56' Lt. to Sta. 97+75.49, 75.01' Lt.
B	119	S.Y.	Sta. 97+81.08, 85.02' Lt. to Sta. 98+10.90, 85.02' Lt.
C	2405	S.Y.	Sta. 96+00.00 to Sta. 99+00.00, Lt. & Rt.
D	2407	S.Y.	Sta. 101+00.00 to Sta. 103+26.00, Lt. & Rt.
E	140	S.Y.	Sta. 101+31.48, 75' Lt. to Sta. 102+20.33, 74.99' Lt. Sta. 102+30.93, 72.33' Lt. to Sta. 102+43.52, 72.55' Lt. Sta. 102+63.76, 71.77' Lt. to Sta. 102+87.36, 71.32' Lt.
F	31	S.Y.	Sta. 103+24.95, 72.18' Lt. to Sta 103+38.73, 72.66' Lt.
G	143	S.Y.	Sta. 101+64.22, 81.04' Rt. to Sta. 102+01.09, 81.01' Rt.
H	173	S.Y.	Sta. 102+87.28, 85' Rt. to Sta. 103+37.25, 85' Rt.
D8	36	L.F.	Removal of Pipe
	36	L.F.	Remove 18" RCP Sta. 100+62.00, 72' Lt. to Sta. 100+94.00, 60' Lt. to Sta. 101+01.00, 69' Lt. See Detail D1.

40 0 40 80

Arizona Blue Stake
1-800-STAKE-IT
1-800-782-5348
Call Two Working Days Before You Dig

Priscilla S. Cornelio, P.E., Director

Designed	L. Barela/J. Bennett	July/2009
Drawn	A. Ledesma/M. Cross	July/2009
Checked	R. Britton	July/2009
Proj. Engr.	L. Barela	Aug/2009

No.	Revision Description	Engineer	Date

Expires 03-31-2011

HDR Engineering, Inc.
5210 East Williams Circle, Suite 530
Tucson, AZ 85711-4459
(520) 584-3600

Pima County Department of Transportation

LA CHOLLA BLVD.:
RUTHRAUFF RD. TO RIVER RD.
DEMOLITION PLANS FOR
RUTHRAUFF RD.

Scales	Horiz. 1"=40' Vert. 1"=NA	Sheet DEM9 of DEM10	Page 29 of 356

012145
0000000000059914
Pima_County_Dept_of_Transportation\PCDOT-La_Cholla_Blvd-Ruthrauff\13.00_CAD\Construction_Documents\Civil\08C-03.dgn

08\20\09 4:46:26 PM aledesma

Project • 4LCITR

Notes:

1. See plan sheets from other plan series for additional demolition information:
   - A) Bike Plans See BP11 to BP12
   - B) Storm Drain Plans See SD14 & SD15
   - C) Storm Drain Details See DD9, DD10 and DD12
   - D) Water Plans See W2 to W11
   - E) Signing and Striping Plans See T1, T6 to T13
   - F) Traffic Signal Plans See SL1
   - G) Landscape Plans See N1 to N8, DP1 to DP6
   - H) Bridge Plans See S3, S5, S12, S14 to S17

2. Privately owned items, such as signs and advertising, removed from within the Right-of-Way limits shall be returned to their proper owner after removal.

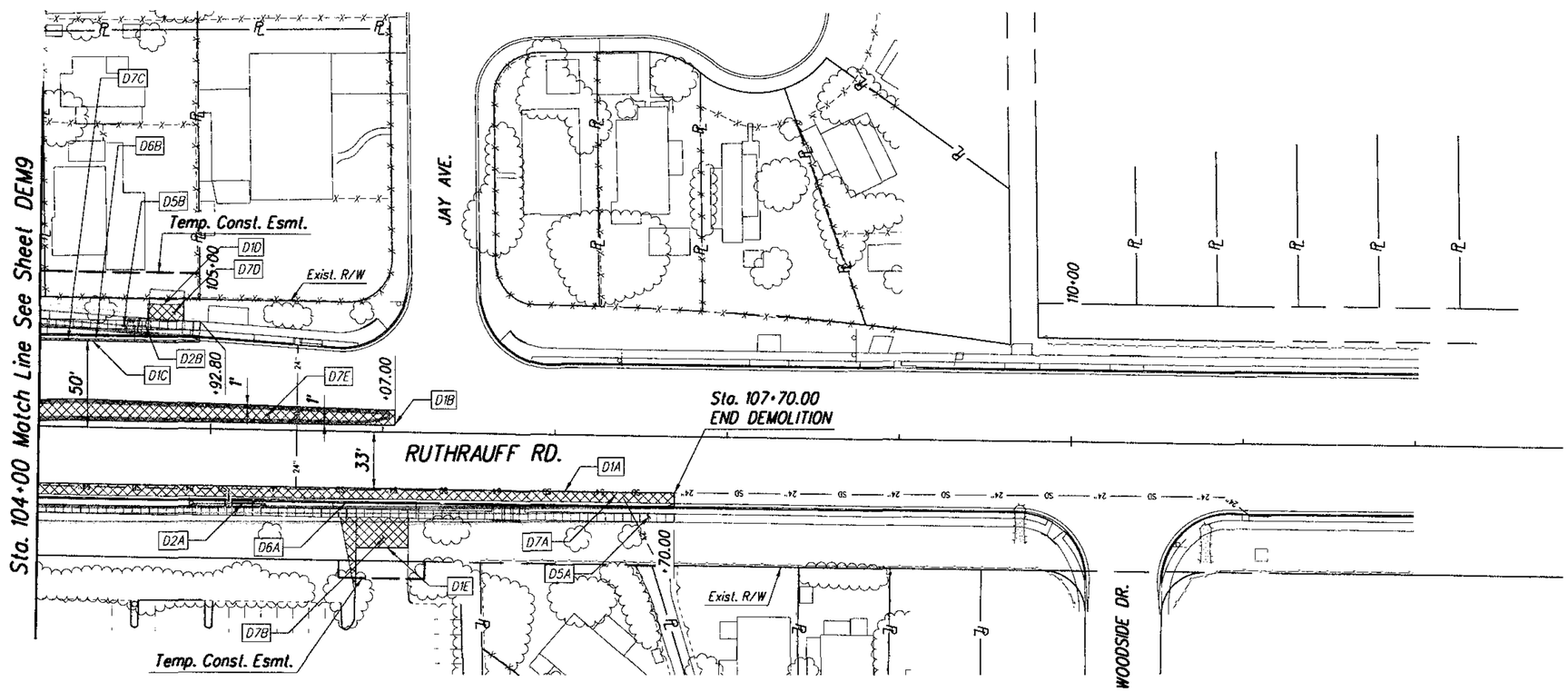

Item No.	Qty.	Unit	Description
D1	971	L.F.	Sawcut Pavement
A	376	L.F.	Sta. 104+00, 33' Rt. to Sta. 107+70.00, 33' Rt. to Sta. 107+70.00, 39.11' Rt.
B	423	L.F.	Sta. 104+00.00, 3.19' Lt. to Sta. 106+07.00, 4' Lt. to Sta. 106+07.00, 12.55' Lt. to Sta. 104+00.00, 15.04' Lt
C	94	L.F.	Sta. 104+00.00, 50' Lt. to Sta. 104+92.60, 50' Lt. to Sta. 104+92.46, 50.99' Lt.
D	21	L.F.	Sta. 104+62.62, 71.96' Lt. to Sta. 104+83.52, 71.73' Lt.
E	57	L.F.	Sta. 105+85.50, 94.59' Rt. to Sta. 105+85.50, 67.64' Rt. to Sta. 106+15.50, 67.19' Rt.
D2	2	Ea.	Removal of Structures & Obstructions
A	1	Ea.	Remove Catch Basin-Sta. 105+18.00, 43.97' Rt.
B	1	Ea.	Remove Mailbox-Sta. 104+56.46, 55.20' Lt.
D5	2327	S.F.	Removal of Misc. Concrete
A	1872	S.F.	Remove Sidewalk-Sta. 104+00.00, 45.26' Rt. to Sta. 107+70.00, 45.21' Rt.
B	455	S.F.	Remove Sidewalk-Sta. 104+00.00, 57.06' Lt. to Sta. 104+92.80, 56.94' Lt.
D6	462	L.F.	Removal of Curb
A	370	L.F.	Remove Curb & Gutter-Sta. 104+00.00, 41.43' Rt. to Sta. 107+70.00, 40.92' Rt.
B	92	L.F.	Remove Curb & Gutter-Sta. 104+00.00, 53.22' Lt. to Sta. 104+92.59, 52.60' Lt.
D7	611	S.Y.	Removal of Bituminous Pavement
A	253	S.Y.	Sta. 104+00.00, 33' Rt. to Sta. 107+70.00, 33' Rt.
B	83	S.Y.	Sta. 105+76.02, 50.19' Rt. to Sta. 106+15.01, 49.99' Rt.
C	11	S.Y.	Sta. 104+00.00, 50' Lt. to Sta. 104+92.60, 50' Lt.
D	23	S.Y.	Sta. 104+62.36, 62.12' Lt. to Sta. 104+83.62, 61.86' Lt.
E	241	S.Y.	Sta. 104+00.00, 3.19' Lt. to Sta. 106+07.00, 4' Lt.

40 0 40 80

Arizona Blue Stake
1-800-STAKE-IT
1-800-782-5348
Call Two Working Days Before You Dig

Pima County Department of Transportation

Priscilla S. Cornelio, P.E., Director

		Date
Designed	L. Borelo/L. Bennett	July/2009
Drawn	A. Ledesma/M. Cross	July/2009
Checked	R. Britton	July/2009
Proj. Engr.	L. Borelo	Aug/2009

No.	Revision Description	Engineer	Date

Expires 03-31-2011

HDR Engineering, Inc.
5210 East Williams Circle, Suite 530
Tucson, AZ 85711-4459
(520) 584-3600

LA CHOLLA BLVD.:
RUTHRAUFF RD. TO RIVER RD.
DEMOLITION PLANS
FOR RUTHRAUFF RD.

Scales	Horiz. 1"=40'	Sheet DEM10 of DEM10	Page 30 of 356
	Verl. 1"=NA		

012145
0000000000059914
Pima_County_Dept_of_Transportation\PC001-La_Cholla_Blvd-Ruthrauff\13.00_CAD\Construction_Documents\Civil\08C-10.dgn

08\20\09 4:46:32 PM aledesma

Project • 4LCITR

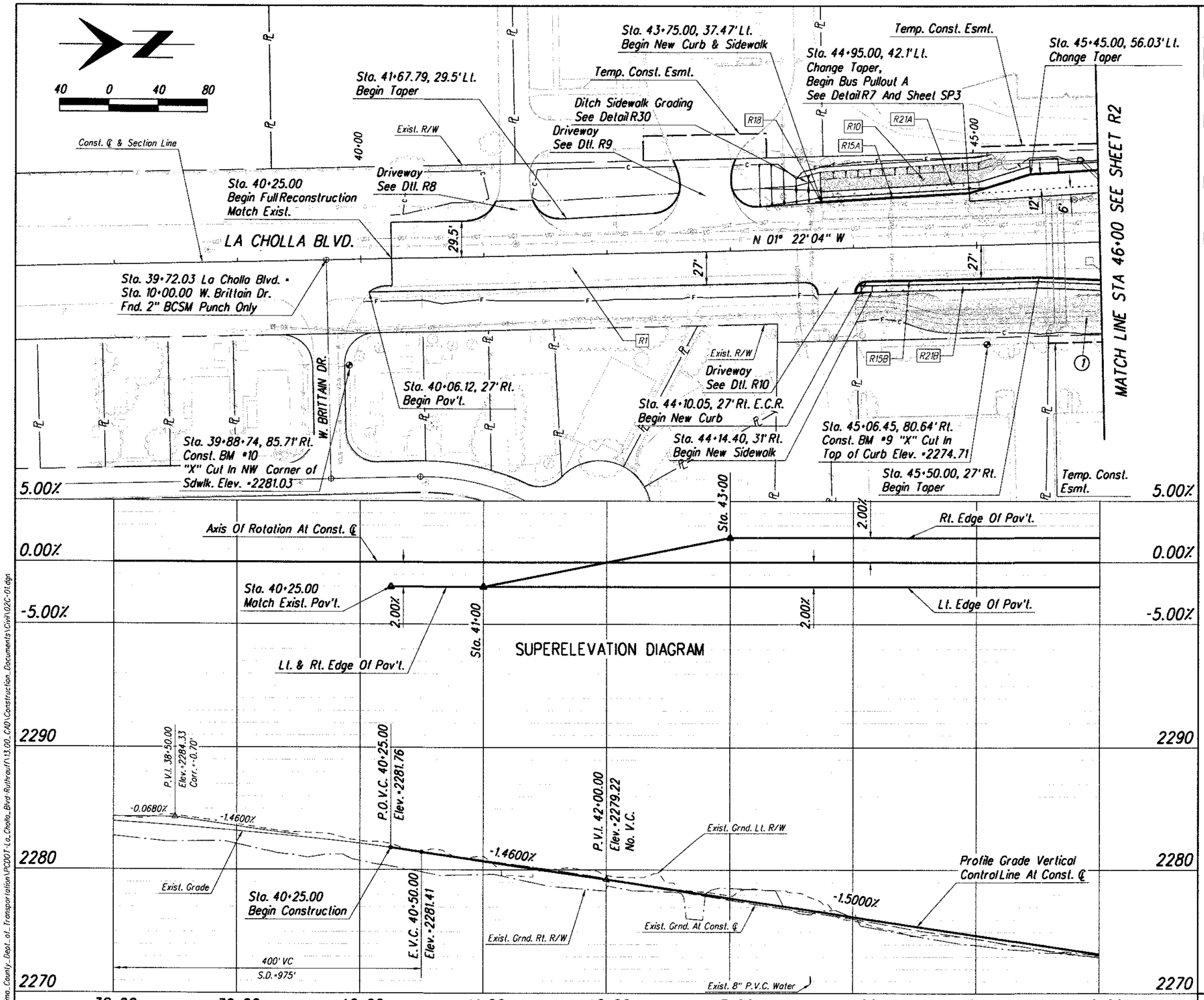

Item No.	Qty.	Unit	Description
R1	3957	S.Y.	Pav't. Struct. Sec. No. 1
R10	230	S.Y.	Sta. 43+75.00, 47.47' Lt. to Sta. 45+00.00, 52.42' Lt. to 45+14.01, 60.5' Lt. Rock Mulch See Detail R30
R15	417	L.F.	Conc. Curb PC/COT Std. Dtl. 209, Type 1, H=6"
A	227	L.F.	Lt.-Sta. 43+75.00 to 46+00.00
B	190	L.F.	Rt.-Sta. 44+10.05 E.C.R. to 46+00.00
R18	1	Each	Sta. 43+70.00, 37.29' Lt. to Sta. 43+75.00, 37.47' Lt. 5' Conc. Curb Terminal Sec. See PC/COT Std. Dtl. 212
R21	1570	S.F.	5' Conc. Sdwlk. PC/COT Std. Dtl. 200, 4" Thick
A	642	S.F.	Lt.-Sta. 43+75.00 to 45+03.08
B	928	S.F.	Rt.-Sta. 44+14.40 to 46+00.00

Notes:

1. Channel Improvements and Barricade Railing, See Storm Drain Plans Sheets SD14 & SD15

Arizona Blue Stake
1-800-STAKE-IT
1-800-782-5348
Call Two Working Days Before You Dig

Priscilla S. Cornelio, P.E., Director

No.	Revision Description	Engineer	Date

		Date
Designed	L. Barela	July/2009
Drawn	A. Ledesma	July/2009
Checked	R. Brittain	July/2009
Proj. Engr.	L. Barela	Aug/2009

Registered Professional Engineer (Civil) CERTIFICATE NO. 37287 L. BARELA Date Signed 8-7-09 ARIZONA, U.S.A.
Expires 03-31-2011

HDR Engineering, Inc.
5210 East Williams Circle, Suite 530
Tucson, AZ 85711-4459
(520) 584-3600

Pima County Department of Transportation

LA CHOLLA BLVD.
RUTHRAUFF RD. TO RIVER RD.
ROADWAY PLANS:
LA CHOLLA BLVD.

Scales	Horiz. 1"=40' Vert. 1"=4'	Sheet	R1 of R16	Page	31 of 356

Project = 4LCITR

012145
000000000059914
Pima_County_Dept._of_Transportation\PCDOT-La_Cholla_Blvd-Ruthrauff\13.00_CAD\Construction_Documents\Civil\02C-01.dgn

08\20\09 4:46:37 PM aledesma

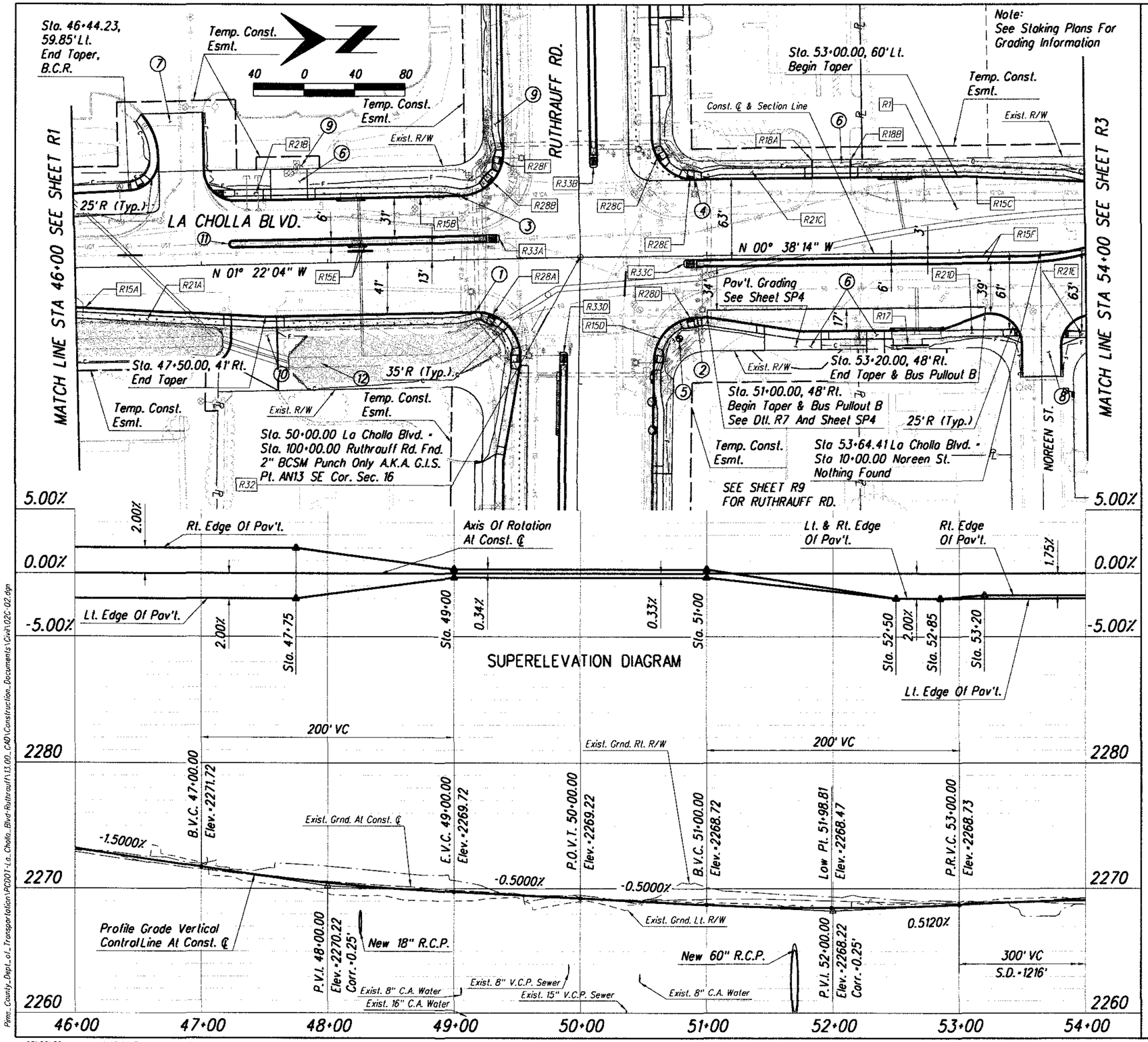

Item No.	Qty.	Unit	Description
R1	9372	S.Y.	Pav't. Struct. Sec. No. 1
R15	2041	L.F.	Conc. Curb PC/COT Std. Dtl. 209, Type 1, H=6"
A	325	L.F.	Rt.-Sta. 46+00.00 to 49+51.05 E.C.R Except Driveway Locations
B	220	L.F.	Lt.-Sta. 46+00.00 to 49+41.49 E.C.R. Except Driveway Locations
C	299	L.F.	Lt.-Sta. 50+57.34 B.C.R. to 54+00.00 Except Driveway Locations
D	169	L.F.	Rt.-Sta. 50+56.97 B.C.R. to 53+24.37 B.C.R. Except Driveway Locations
E	411	L.F.	Median-Sta. 47+22.00 to 49+26.00
F	617	L.F.	Median-Sta. 50+92.00 to 54+00.00
R17	30	L.F.	Sta. 52+45.00, 72' Rt to 52+75.00, 72' Rt Conc. Curb PC/COT Std. Dtl. 209, Type 2, H=8". See Sheet SP4 for Grading Information
R18	2	Each	6' Conc. Curb Terminal Section PC/DOT Std. Dtl. 212
A	1	Each	Sta. 51+84.70, 75' Lt. Elev.=2268.32 to Sta. 51+84.70, 69' Lt., Elev.=2268.37
B	1	Each	Sta. 52+14.70, 75' Lt., Elev.=2268.91 to Sta. 52+14.70, 69' Lt., Elev.=2268.18
R21	4031	S.F.	5' Conc. Sdwlk. PC/COT Std. Dtl. 200, 4" Thick
A	1480	S.F.	Rt.-Sta. 46+00.00 to 49+51.05 E.C.R. Except Driveway and Curb Access Ramp Locations
B	777	S.F.	Lt.-Sta. 47+27.85 to Curb Access Ramp R28B Except Driveway
C	1370	S.F.	Lt.-Curb Access Ramp 28C to 54+00.00 Except Driveway and Curb Access Ramp Locations
D	377	S.F.	Rt.-Sta. 50+56.97 B.C.R to 53+24.37 B.C.R. Except Driveway and Curb Access Ramp Locations
E	27	S.F.	Rt.-Sta. 53+94.79 to 54+00.00 Except Curb Access Ramp Locations
R28	6	Each	Conc. Curb Access Ramp See Detail R35, Type 1
A	1	Each	Sta. 49+29.57, 43.71' Rt.
B	1	Each	Sta. 49+32.08, 61.12' Lt.
C	1	Each	Sta. 50+61.94, 77.66' Lt., Adjust Telephone Manhole to be Flush with Ramp
D	1	Each	Sta. 50+86.36, 48.45' Rt.
E	1	Each	Sta. 50+87.74, 60.30' Lt.
F	1	Each	Sta. 49+40.71, 77.64' Lt.
R32	1	Each	Sta. 50+00.00 New Survey Monument with Frame and Cover PC/COT Std. Dtl. 103
R33	4	Each	Curb Access Ramp Special, See Detail R29
A	1	Each	Sta. 49+36.00, 16' Lt., Crosswalk A
B	1	Each	Sta. 99+29.00, 12.00' Lt., See Sheet SP8, Crosswalk F
C	1	Each	Sta. 50+82.00, 6.00' Rt., See Sheet SP8, Crosswalk B
D	1	Each	Sta. 100+75.00, 12.00' Rt., See Sheet SP8, Crosswalk G

Notes:

1. Sta. 49+16.07, 41' Rt. B.C.R
2. Sta. 50+91.96, 48' Rt. E.C.R.
3. Sta. 49+06.49, 50' Lt. B.C.R.
4. Sta. 50+92.34, 60' Lt. E.C.R.
5. Sta. 50+77.76, 64.71' Rt. Const. BM #1 Chiseled "X" SW Cor. of Gas Vault, Elev.=2270.72
6. Driveway See Detail R1
7. Driveway See Detail R11 and Staking Plan SP3
8. Noreen St. See Sheet R11
9. Tucson Water Booster Station See Water Plans & Special Provisions
10. Driveway See Detail R12
11. Curbed Median Nose PC/COT Std. Dtl. 214
12. Channel Improvements See Storm Drain Plans Sheets SD14 & SD15

Arizona Blue Stake
1-800-STAKE-IT
1-800-782-5348
Call Two Working Days Before You Dig

Scales	Horiz. 1"=40' Vert. 1"=4'	Sheet R2 of R16	Page 32 of 356

Pima County Department of Transportation

LA CHOLLA BLVD.
RUTHRAUFF RD. TO RIVER RD.
ROADWAY PLANS:
LA CHOLLA BLVD.

HDR Engineering, Inc.
5210 East Williams Circle, Suite 530
Tucson, AZ 85711-4459
(520) 584-3600

Priscilla S. Cornelio, P.E., Director

Designed	L. Barela
Drawn	A. Ledesma
Checked	R. Britton
Proj. Engr.	L. Barela

No.	Revision Description	Engineer	Date

Date	
July/2009	
July/2009	
July/2009	
Aug/2009	

Registered Professional Engineer (Civil) CERTIFICATE NO. 37267 LE BARELA Date Signed 8-20-09 Arizona, U.S.A.
Expires 03-31-2011

012145
0000000000059914
Pima_County_Dept_of_Transportation\PCD01-La_Cholla_Blvd-Ruthrauff\13.00_CAD\Construction_Documents\Civil\02C-02.dgn

08\20\09 4:46:44 PM aledesma

Project # 4LCITR

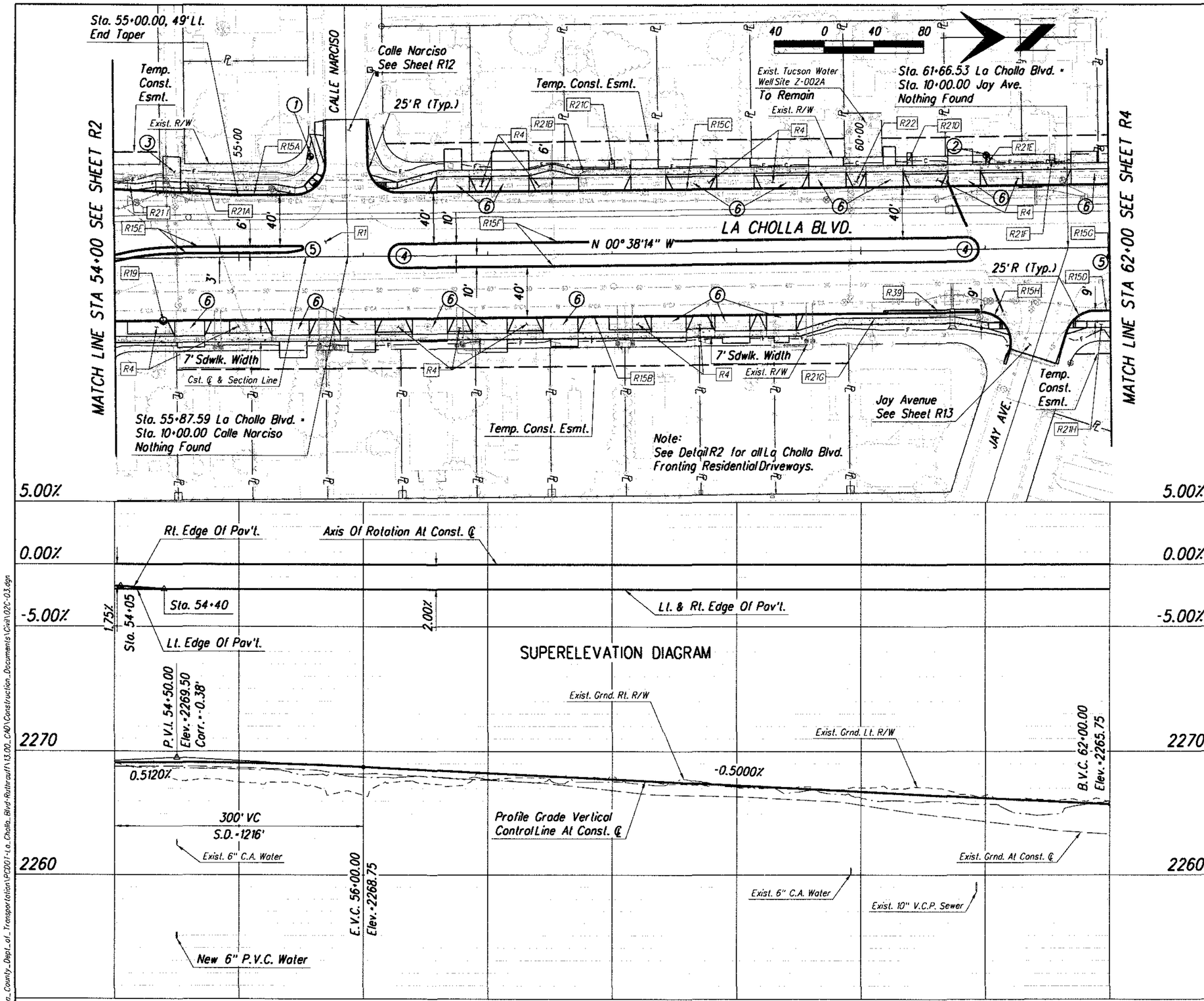

Item No.	Qty.	Unit	Description
R1	7731	S.Y.	Pav't. Struct. Sec. No. 1
R4	393	S.Y.	Pav't. Struct. Sec. No. 4 Driveway Backup Areas
R15	1928	L.F.	Conc. Curb PC/COT Std. Dtl. 209, Type 1, H=6"
A	120	L.F.	Lt.-Sta. 54+00.00 to 55+45.78 B.C.R. Except Driveway
B	254	L.F.	Rt.-Sta. 54+04.37 B.C.R. to 60+95.20 B.C.R. Except Driveways
C	251	L.F.	Lt.-Sta. 56+28.78 E.C.R. to 62+00.00 Except Driveways
D	12	L.F.	Rt.-Sta. 61+87.94 E.C.R to 62+00.00
E	308	L.F.	Median-Sta. 54+00.00 to 55+52.00
F	973	L.F.	Median-Sta. 56+20.00 to 60+95.00
G	6	L.F.	Median-Sta. 61+98.00 to 62+00.00
H	4	L.F.	Median-Sta. 60+91.50 to 60+95.20 B.C.R.
R19	1	Each	Sta. 54+38.84, 50.38 Rt. Manhole / Curb Conflict, Sewer MH #9715-04, See Detail R26
R21	4944	S.F.	5' Conc. Sdwlk. PC/COT Std. Dtl. 200, 4" Thick
A	429	S.F.	Lt.-Sta. 54+00.00 to 55+45.78 B.C.R.
B	1709	S.F.	Lt.-Sta. 56+27.57 to 61+70.00
C	28	S.F.	Sta. 58+00.75, 68' Lt. to 58+00.75, 75' Lt. 4' Wide Sdwlk.
D	40	S.F.	Sta. 60+40.25, 68' Lt. to 60+40.25, 78' Lt. 4' Wide Sdwlk.
E	24	S.F.	Sta. 61+03.00, 68' Lt. to 61+03.00, 76' Lt. 3' Wide Sdwlk.
F	28	S.F.	Sta. 61+55.00, 68' Lt. to 61+55.00, 75' Lt. 4' Wide Sdwlk.
G	2431	S.F.	Rt.-Sta. 54+00.00 to 61+02.06 Except at Driveway Locations
H	95	S.F.	Rt.-Sta. 61+81.09 to 62+00.00
I	170	S.F.	Rt.-Sta. 54+00.00 to 54+34.00 6" Thick
R22	126	S.F.	Sta. 59+97.00, 51' Lt. Conc. Driveway, 6" Thick, Match Driveway Aprons And Sidewalk
R39	37	L.F.	Sta. 60+18.00, 50' Rt. to Sta. 60+54.50, 50' Rt. Conc. Curb and Gutter, See Detail R37

Notes:

1. Sta. 55+58.38, 80.20' Lt. Const. BM #2 Chiseled "X" at Back of Sdwlk. Elev.=2267.16
2. Sta. 61+01.71, 75.09' Lt. Const. BM #3 Chiseled "X" in SE Cor. of Sdwlk. Elev.=2266.57
3. Driveway, See Detail R1
4. Curbed Median Nose PC/COT Std. Dtl. 214
5. Curbed Median Nose PC/COT Std. Dtl. 214, See Also Detail R33, Median H on SP9 and Median C on SP8
6. Driveway, See Detail R2.

Arizona Blue Stake
1-800-STAKE-IT
1-800-782-5348
Call Two Working Days Before You Dig

No.	Revision Description	Engineer	Date

		Date
Designed	L. Borelo	July/2009
Drawn	A. Ledesma	July/2009
Checked	R. Brittain	July/2009
Proj. Engr.	L. Borelo	Aug/2009

Priscilla S. Cornelio, P.E., Director

Pima County Department of Transportation

Registered Professional Engineer (Civil) CERTIFICATE NO. 37267 L.I. BARELA Date Signed 03-31-09 ARIZONA, U.S.A.
Expires 03-31-2011

HDR Engineering, Inc.
5210 East Williams Circle, Suite 530
Tucson, AZ 85711-4459
(520) 584-3600

LA CHOLLA BL VD.
RUTHRAUFF RD. TO RIVER RD.
ROADWAY PLANS:
LA CHOLLA BL VD.

Scales	Horiz. 1"=40' Vert. 1"=4'	Sheet	R3 of R16	Page	33 of 356

012145
0000000000059914
Pima_County_Dept_of_Transportation\PCDOT-La_Cholla_Blvd-Ruthrauff\13.00_CAD\Construction_Documents\Civil\02C-03.dgn

08\20\09 4:46:52 PM aledesma

Project • 4LCITR

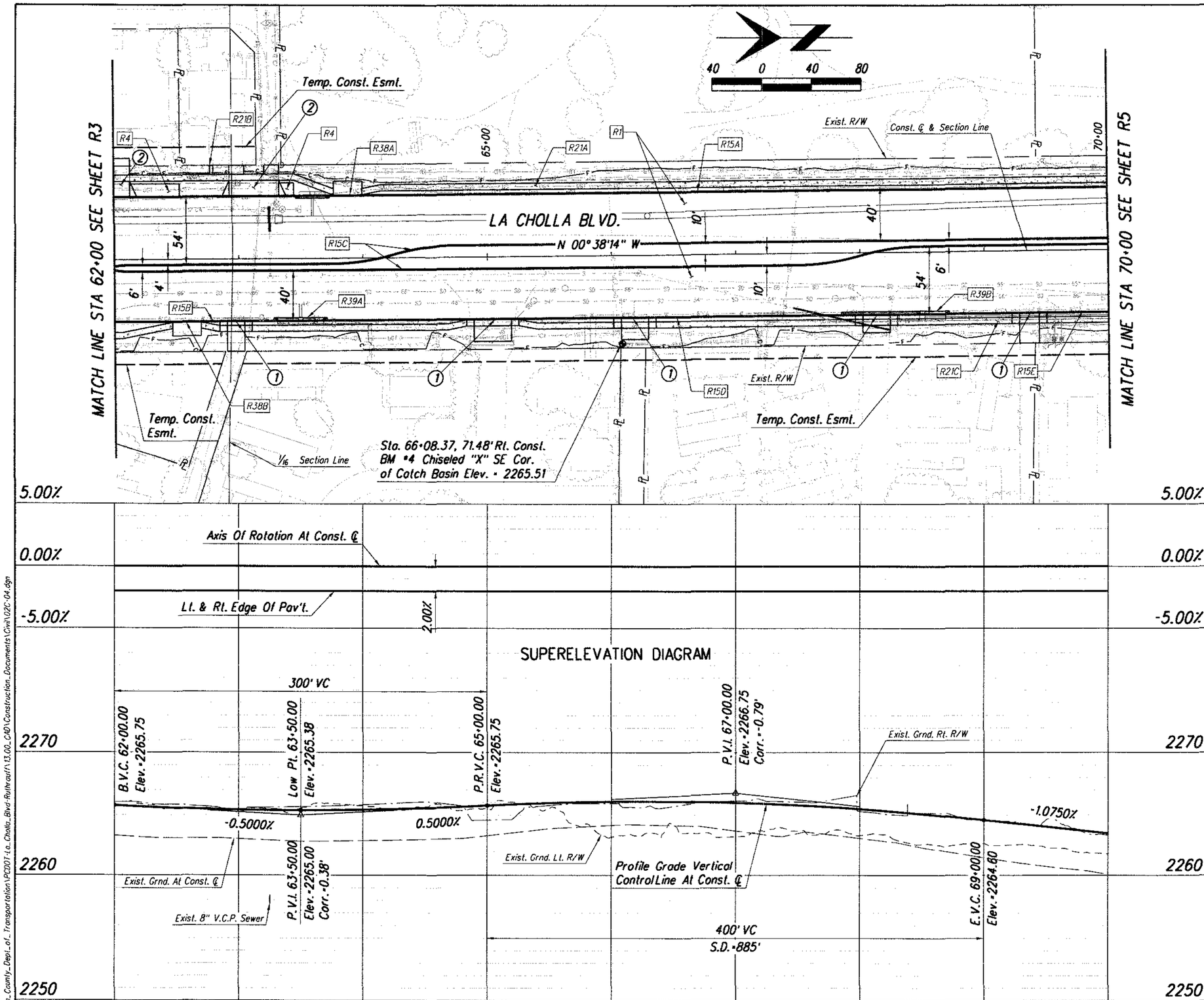

Item No.	Qty.	Unit	Description
R1	7739	S.Y.	Pav't. Struct. Sec. No. 1
R4	51	S.Y.	Pav't. Struct. Sec. No. 4 Driveway Backup Areas
R15	2852	L.F.	Conc. Curb PC/COT Std. Dtl. 209 Type 1, H=6"
A	708	L.F.	Lt.-Sta. 62+00.00 to 70+00.00 Except at Driveway Locations
B	102	L.F.	Rt.-Sta. 62+00.00 to 63+27.92 Except at Driveway Locations
C	1604	L.F.	Median-Sta. 62+00.00 to 70+00.00
D	338	L.F.	Rt.-Sta. 63+70.92 to 67+84.79 Except at Driveway Locations
E	100	L.F.	Rt.-Sta. 68+71.71 to 70+00.00 Except at Driveway Locations
R21	6703	S.F.	5' Conc. Sdwlk. PC/COT Std. Dtl. 200, 4" Thick
A	3620	S.F.	Lt.-Sta. 62+13.00 to 70+00.00 Except at Driveway and Bus Shelter Pad Locations
B	18	S.F.	Lt.-Sta. 62+78.75 68' Lt. to 62+78.75, 75' Lt. 2.5' Sdwlk Width
C	3065	S.F.	Rt.-Sta. 62+00.00 to 70+00.00 Except at Driveway and Bus Shelter Pad Locations
R38	2	Each	Conc. Bus Shelter Pad See Dtl. R23, Sheet RD20
A	1	Each	Sta. 63+88.50, 50' Lt.
B	1	Each	Sta. 62+58.00, 50' Rt.
R39	130	L.F.	Conc. Curb and Gutter, See Detail R37
A	43	L.F.	Rt.-Sta. 63+27.92 to 63+70.92
B	87	L.F.	Rt.-Sta. 67+84.79 to 68+71.71

Notes:

1. Driveway, See Detail R1
2. Driveway, See Detail R2

Arizona Blue Stake
1-800-STAKE-IT
1-800-782-5348
Call Two Working Days Before You Dig

Priscilla S. Cornelio, P.E., Director

		Date
Designed	L. Barela	July/2009
Drawn	A. Ledesma	July/2009
Checked	R. Britton	July/2009
Proj. Engr.	L. Barela	Aug/2009

No.	Revision Description	Engineer	Date

Registered Professional Engineer (Civil) LUIS BARELA 37267 Date Signed ARIZONA, U.S.A.
Expires 03-31-2011

HDR Engineering, Inc.
5210 East Williams Circle, Suite 530
Tucson, AZ 85711-4459
(520) 584-3600

Pima County Department of Transportation

LA CHOLLA BLVD.
RUTHRAUFF RD. TO RIVER RD.
ROADWAY PLANS:
LA CHOLLA BLVD.

Scales	Horiz. 1"=40' Vert. 1"=4'	Sheet	R4 of R16	Page	34 of 356

012145
G000000000059914
Pima_County_Dept_of_Transportation\PC001-La_Cholla_Blvd-Ruthrauff\13.00_CAD\Construction_Documents\Civil\02C-04.dgn

08\20\09 4:46:59 PM aledesma

Project • 4LCITR

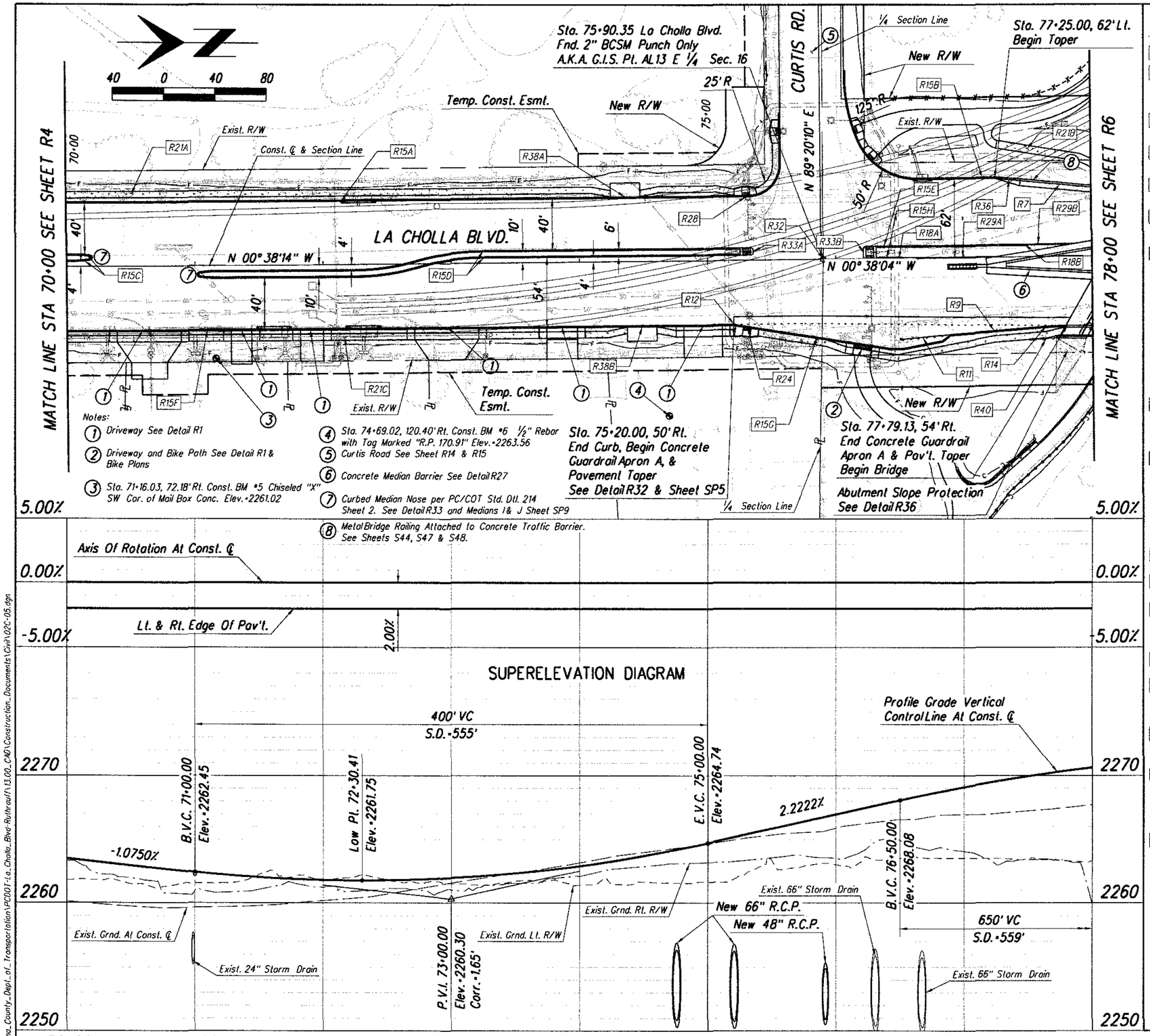

Item No.	Qty.	Unit	Description
R1	8275	S.Y.	Pav't. Struct. Sec. No. 1
R7	55.4	L.F.	Sta 77+44.89, 59.91' Lt. to 78+00.00, 54.13' Lt. Concrete Traffic Barrier (Type F) (32"), See ADOT Std. Drawing SD 1.01
R9	75	L.F.	Sta. 76+88.70, 59.75' Rt. to 77+63.51, 54.42' Rt. W-Beam Guardrail with Steel Posts, ADOT Std. C-10.04
R11	1	Each	Sta. 76+51.34, 63.01' Rt. to 76+88.70, 59.75' Rt. Guardrail End Terminal Fleat 350, See Dtl. R24
R12	1	Each	Sta. 75+20.00, 50' Lt. Conc. Curb Transition 6" Type 1 to 4" Type 1, See Dtl. R6
R14	1	Each	Sta. 77+63.51, 54.42' Rt. to 77+79.13, 53.98' Rt. Thrie Beam Guardrail Transition, See ADOT Std. Drawing SD 1.03
R15	1931	L.F.	Conc. Curb PC/COT Std. Dtl. 209, Type 1, H=6"
A	512	L.F.	Lt.-Sta. 70+00.00 to 75+32.83 B.C.R
B	52	L.F.	Lt.-Sta. 76+64.00 E.C.R. to 77+25.00
C	41	L.F.	Median Sta. 70+00.00 to 70+20.04
D	854	L.F.	Median Sta. 71+01.96 to 75+25.64
E	114	L.F.	Median Sta. 76+31.68, 10' Lt to 77+45.00, 10' Lt, H=4"
F	220	L.F.	Rt.-Sta. 70+00.00 to 75+20.00 Except at Driveway Locations
G	237	L.F.	Rt. Sta. 75+20.00 to 77+79.13, H=4"
H	15	L.F.	Median Sta. 76+31.68 to 76+47.00, H=4"
R18	2	Each	5' Conc. Curb Terminal Section PC/COT Std. Dtl. 212
A	1	Each	Sta. 76+47.00 to 76+52.00
B	1	Each	Sta. 77+45.00, 10' Lt. to 77+50.00, 10' Lt.
R21	5210	S.F.	5' Conc. Sdwlk. PC/COT Std. Dtl. 200, 4" Thick
A	2493	S.F.	Lt.-Sta. 70+00.00 to 75+21.83 B.C.R. Except at Bus Shelter Pad Location
B	452	S.F.	Lt.-Sta. 77+26.09, 85.51' Lt. to 78+00.00, 70.39' Lt., 6' Wide, See Detail R14
C	2265	S.F.	Rt.-Sta. 70+00.00 to 77+78.35 Except at Driveway, Curb Access Ramps and Bus Shelter Pad Location
R24	1	Each	Sta. 75+30.64, 51.74' Rt., Conc. Curb Access Ramp See Detail R35, Type 2
R28	1	Each	Sta. 75+30.64, 50' Lt., Conc. Curb Access Ramp See Detail R35, Type 1
R29	107	L.F.	Conc. Header PC/COT Std. Dtl. 213
A	71	L.F.	Sta. 76+52.00 to 77+22.96
B	36	L.F.	Sta. 77+50.00, 10' Lt. to 77+86.12, 10' Lt.
R32	1	Each	Sta. 75+90.35 New Survey Monument with Frame and Cover PC/COT Std. Dtl. 103
R33	2	Each	Curb Access Ramp Special, See Detail R29
A	1	Each	Sta. 75+35.64, 7' Lt., See Median Crosswalk D on Sheet SP8
B	1	Each	Sta. 76+21.68, 5' Lt., See Median Crosswalk E on Sheet SP8
R36	1	Each	Sta. 77+25.00, 62' Lt. to 77+44.89, 58.91' Lt. Conc. Vertical Curb Type I to 32" Half Bridge Barrier, See Dtl. R28
R38	2	Each	Conc. Bus Shelter Pad, See Dtl. R23, Sheet RD20
A	1	Each	Sta. 74+36.50, 50' Lt.
B	1	Each	Sta. 74+48.50, 50' Rt.
R40	25	L.F.	Sta. 77+50.31, 64.88' Rt. to Sta. 77+65.27, 63.82' Rt. to Sta. 77+75.24, 63.03' Rt. Barricade Railing PC/COT Std. 105, Use Lower Rail Alternate Location

Arizona Blue Stake
1-800-STAKE-IT
1-800-782-5348
Call Two Working Days Before You Dig

Pima County Department of Transportation

Priscilla S. Cornelio, P.E., Director

No.	Revision Description	Engineer	Date

		Date
Designed	L. Barela	July/2009
Drawn	A. Ledesma	July/2009
Checked	R. Brittain	July/2009
Proj. Engr.	L. Barela	Aug/2009

REGISTERED PROFESSIONAL ENGINEER (CIVIL) CERTIFICATE NO. 37287 LE BARELA ARIZONA, U.S.A.
Expires 03-31-2011

HDR Engineering, Inc.
5210 East Williams Circle, Suite 530
Tucson, AZ 85711-4459
(520) 584-3600

LA CHOLLA BL VD.
RUTHRAUFF RD. TO RIVER RD.
ROADWAY PLANS:
LA CHOLLA BL VD.

Scales: Horiz. 1"=40' Vert. 1"=4'

Sheet R5 of R16

Page 35 of 356

Project # 4LCITR

012145
00000000005994
Pima_County_Dept_of_Transportation\PCDOT-La_Cholla_Blvd-Ruthrauff\13.00_CAD\Construction_Documents\Civil\02C-05.dgn

08\20\09 4:47:05 PM aledesma

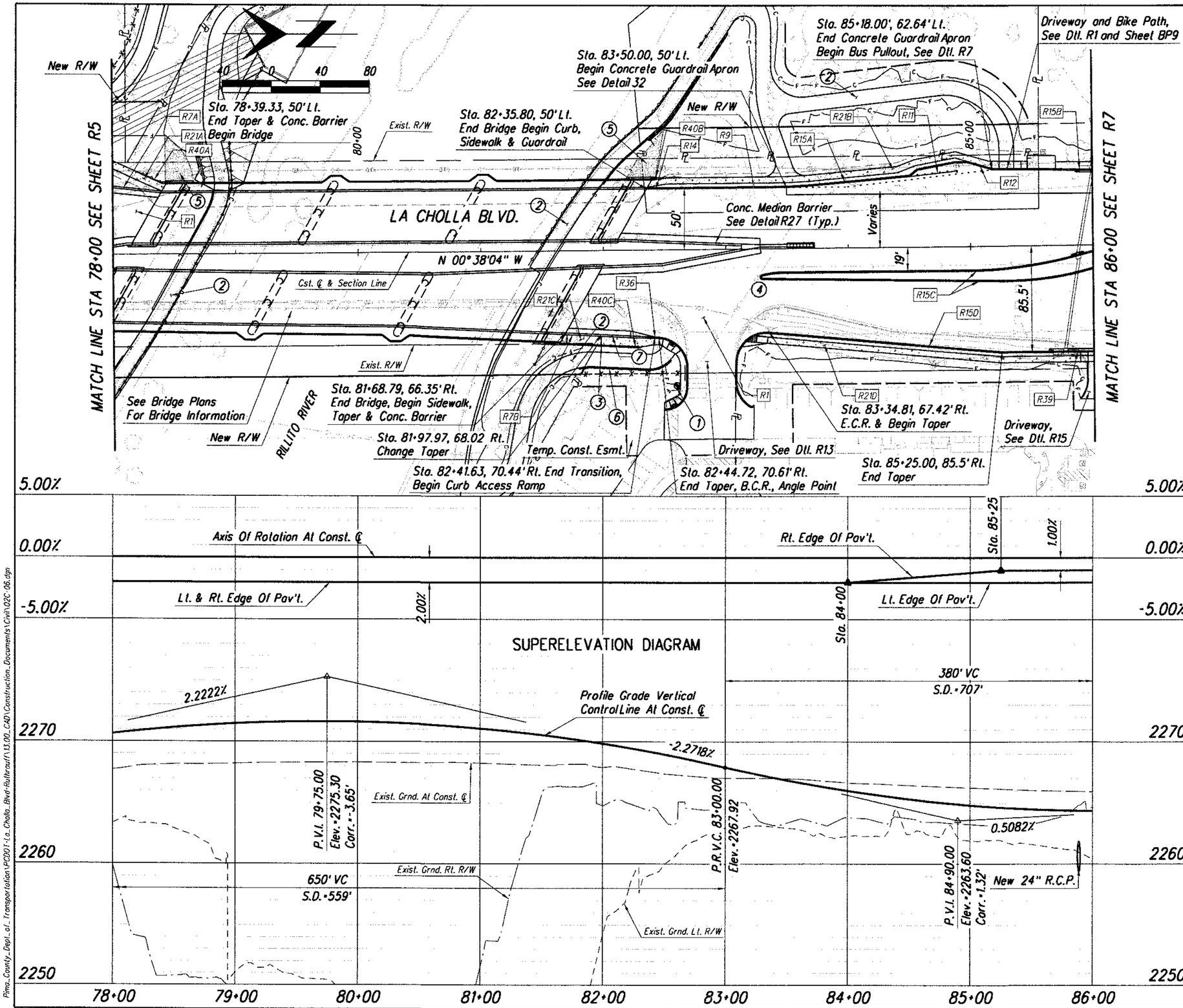

Item No.	Qty.	Unit	Description
R1	4814	S.Y.	Pav't. Struct. Sec. No. 1
R7	92.6	L.F.	Concrete Traffic Barrier (Type F) (32"), See ADOT Std. Dwg. SD 1.01
A	39.6	L.F.	Sta. 78+00.00, 54.13' Lt. to 78+39.33, 50' Lt.
B	53.0	L.F.	Sta. 81+68.79, 66.35' Rt. to 82+21.65, 69.33' Rt.
R9	200	L.F.	Sta. 82+51.42, 50' Lt. to 83+50.22, 50' Lt. to 83+68.95, 50.89' Lt. to 84+51.10, 58.00' Lt. W-Beam Guardrail with Steel Posts, ADOT Std. C-10.04
R11	1	Each	Sta. 84+51.10, 58.00' Lt. to 84+88.40, 61.84' Lt. Guardrail End Terminal Fleat 350, See Dtl. R24
R12	1	Each	Sta. 85+13.21, 64.09' Lt. to 85+18.00, 62.64' Lt. Vertical Conc. Curb Transition 6" Type 1 to 4" Type 1, See Dtl. R6
R14	1	Each	Sta. 82+35.80, 50.00' Lt. to 82+51.42, 50.00' Lt. Thrie-Beam Guardrail Transition, See ADOT Std. Drawing SD 1.03
R15	1108	L.F.	Conc. Curb PC/COT Std. Dtl. 209 Type 1, H=6"
A	281	L.F.	Lt.-Sta. 82+35.80 to 85+13.21, H=4"
B	48	L.F.	Lt.-Sta. 85+42.00 to 86+00.00
C	549	L.F.	Median-Sta. 83+28.05 to 86+00.00
D	230	L.F.	Rt.-Sta. 83+34.81 E.C.R. to 85+63.50
R21	3490	S.F.	5' Conc. Sdwlk. PC/COT Std. Dtl. 200, 4" Thick
A	276	S.F.	Sta. 78+00.00 70.39' Lt. to 78+40.36 51.79' Lt., 6' Wide, See Detail R14
B	1418	S.F.	Lt.-Sta. 82+36.58 to 85+18.00
C	514	S.F.	Rt.-Sta. 81+67.97 to 82+41.60, 6" Thick
D	1282	S.F.	Rt.-Sta. 83+33.23 to 85+89.00
R36	1	Each	Sta. 82+21.65, 69.33' Rt. to 82+41.63, 70.44' Rt. Conc. Vertical Curb Type I to 32" Half Bridge Barrier Transition, See Dtl. R28
R39	37	L.F.	Rt.-Sta. 85+63.50 to 86+00.00 Conc. Curb and Gutter, See Detail R37
R40	116	L.F.	Barricade Railing PC/COT Std. Dtl. 105. Use Lower Rail Alternate Location
A	25	L.F.	Sta. 78+21.56, 67.06' Lt. to 78+39.72, 58.69' Lt. to 78+44.71, 59.12' Lt.
B	25	L.F.	Sta. 82+39.73, 59.13' Lt. to 82+49.72, 59.50' Lt. to 82+64.72, 59.50' Lt.
C	66	L.F.	Sta. 81+63.98, 75.22' Rt. to 81+68.99, 75.25' Rt. to 82+29.90, 78.56' Rt. See Detail R21

Notes:

1. Sta. 82+59.30, 109.88' Rt. Const. BM #7 Chiseled "X" Top of Conc. Light Pole Base Elev.=2267.36
2. Bike Path and Soil Cement, See Bike Plans
3. Retaining Wall RW-1, See Dtl. R21
4. Curbed Median Nose PC/COT Std. Dtl. 214
5. Abutment Slope Protection, See Detail R36
6. Retaining Wall RW-2, See Detail R22
7. Metal Bridge Railing Attached to Concrete Traffic Barrier See Sheets S44, S47 & S48

Arizona Blue Stake
1-800-STAKE-IT
1-800-782-5348
Call Two Working Days Before You Dig

Scales: Horiz. 1"=40' Vert. 1"=4'

Sheet R6 of R16

Page 36 of 356

Pima County Department of Transportation

LA CHOLLA BL VD.
RUTHRAUFF RD. TO RIVER RD.
ROADWAY PLANS:
LA CHOLLA BL VD.

HDR Engineering, Inc.
5210 East Williams Circle, Suite 530
Tucson, AZ 85711-4459
(520) 584-3600

Expires 03-31-2011

No.	Revision Description	Engineer	Date

		Date
Designed	L. Barela	July/2009
Drawn	A. Ledesma	July/2009
Checked	R. Britton	July/2009
Proj. Engr.	L. Barela	Aug/2009

Priscilla S. Cornelio, P.E., Director

Project • 4LCITR

08\20\09 4:47:12 PM aledesma

012145
0000000000059914
Pima_County_Dept._of_Transportation\PCDOT-La_Cholla_Blvd-Ruthrauff\13.00_CAD\Construction_Documents\Civil\02C-06.dgn

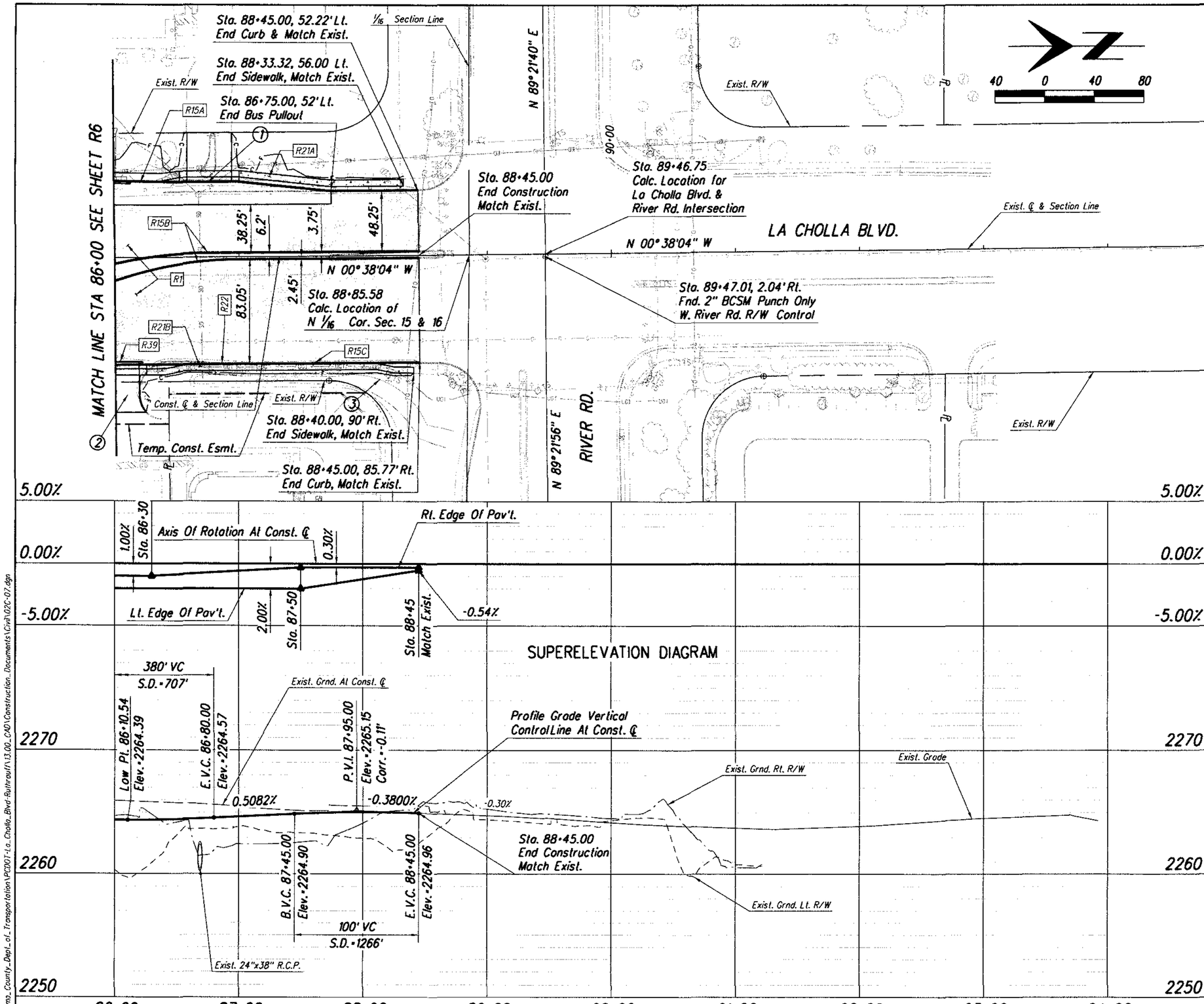

Item No.	Qty.	Unit	Description
R1	3342	S.Y.	Pav't. Struct. Sec. No. 1
R15	900	L.F.	Conc. Curb PC/COT Std. Dtl. 209 Type 1, H=6"
A	187	L.F.	Lt.-Sta. 86+00.00 to 88+45.00, Except at Driveway Locations
B	493	L.F.	Median-Sta. 86+00.00 to 88+45.00
C	220	L.F.	Rt.-Sta. 86+25.00 to 88+45.00
R21	1739	S.F.	5' Conc. Sdwlk. PC/COT Std. Dtl. 200, 4" Thick
A	664	S.F.	Lt.-Sta. 87+01.00 to 88+33.32
B	1075	S.F.	Rt.-Sta. 86+25.00 to 88+40.00
R39	22	L.F.	Rt.-Sta. 86+00.00 to 86+22.00, Conc. Curb and Gutter, See Detail R37

Notes:

1. Driveway See Details R1 & R16
2. Driveway See Detail R1 & R15
3. Exist. Drainage Channel to Remain

No.	Revision Description	Engineer	Date

		Date
Designed	L. Barela	July/2009
Drawn	A. Ledesma	July/2009
Checked	R. Brillam	July/2009
Proj. Engr.	L. Barela	Aug/2009

Priscilla S. Cornelio, P.E., Director

Pima County Department of Transportation

Expires 03-31-2011

HDR Engineering, Inc.
5210 East Williams Circle, Suite 530
Tucson, AZ 85711-4459
(520) 584-3600

LA CHOLLA BLVD.
RUTHRAUFF RD. TO RIVER RD.
ROADWAY PLANS:
LA CHOLLA BLVD.

Arizona Blue Stake
1-800-STAKE-IT
1-800-782-5348
Call Two Working Days Before You Dig

Scales	Horiz. 1"=40' Vert. 1"=4'	Sheet	R7 of R16	Page	37 of 356

Project • 4LCITR

012145
0000000000059914
Pima_County_Dept_of_Transportation\PC001-La_Cholla_Blvd-Ruthrauff\13.00_CAD\Construction_Documents\Civil\02C-07.dgn

08\20\09 4:47:19 PM aledesma

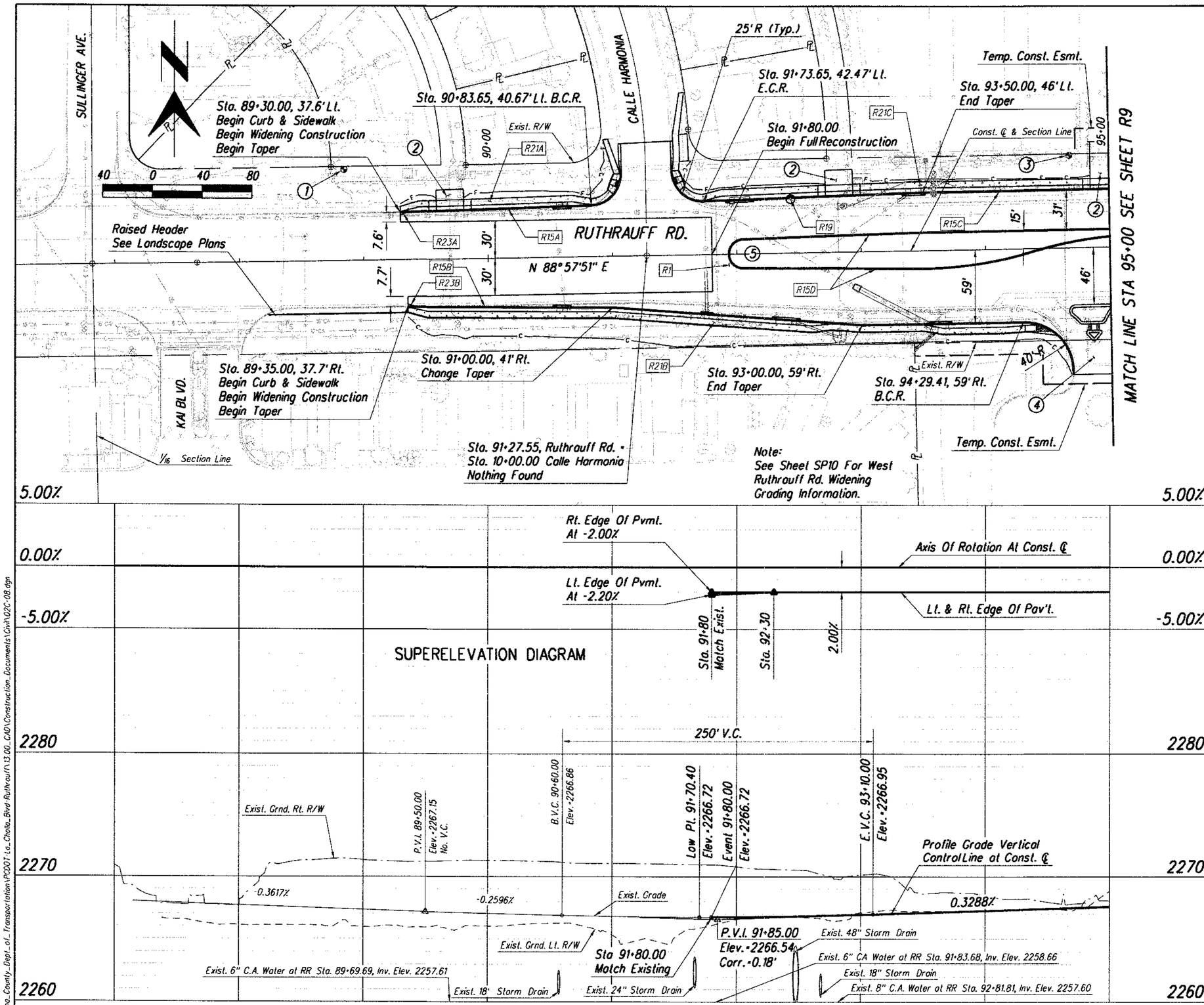

Item No.	Qty.	Unit	Description
R1	3363	S.Y.	Pav't. Struct. Sec. No. 1
R15	1470	L.F.	Conc. Curb PC/COT Std. Dtl. 209 Type 1, H=6"
A	107	L.F.	Lt.-Sta 89+30.00 to 90+83.65 B.C.R Except Driveway Locations
B	490	L.F.	Rt.-Sta. 89+35.00 to 94+29.41 B.C.R.
C	243	L.F.	Lt.-Sta. 91+73.65 E.C.R. to 95+00.00 Except Driveway Locations
D	630	L.F.	Medion-Sta. 91+93.13 to 95+00.00
R19	1	Each	Sta. 92+43.83, 43.29' Lt. Manhole / Curb Conflict, Sewer MH #9717-40A, See Detail R26
R21	4419	S.F.	5' Conc. Sdwlk. PC/COT Std. Dtl. 200, 4" Thick
A	591	S.F.	Lt.-Sta 89+30.00 to 90+83.65 B.C.R. Except Driveway Locations
B	2471	S.F.	Rt.-Sta. 89+35.00 to 94+29.41 B.C.R.
C	1357	S.F.	Lt.-Sta. 91+73.63 E.C.R. to 95+00.00 Except Driveway Locations
R23	10	L.F.	Concrete Curb Transition Type 1 Curb to Type 1G Curb and Gutter, See Detail R38
A	5	L.F.	Sta. 89+30.00, 37.6' Lt. to Sta. 89+35.00, 37.7' Lt.
B	5	L.F.	Sta. 89+35.00, 37.7' Rt. to Sta. 89+40.00, 37.8' Rt.

Notes:

1. Sta. 88+85.18, 72.70' Lt. Const. BM #12 Chiseled "X" in SE Cor. of Mailbox Conc. Elev.=2266.65
2. Driveway See Dtl. R1
3. Sta. 94+68.26, 73.83' Lt. Const. BM #11 1/2" Rebar 1' South of Block Wall Elev.=2267.07
4. Driveway See Dtl. R17
5. Curbed Median Nose PC/COT Std. Dtl. 214

Arizona Blue Stake
1-800-STAKE-IT
1-800-782-5348
Call Two Working Days Before You Dig

No.	Revision Description	Engineer	Date

		Date
Designed	L. Barela	July/2009
Drawn	A. Ledesma	July/2009
Checked	R. Brittain	July/2009
Proj. Engr.	L. Barela	Aug/2009

Priscilla S. Cornelio, P.E., Director

Registered Professional Engineer (Civil) CERTIFICATE NO. 37267 L.J. BARELA Date Signed 8-24-09 ARIZONA, U.S.A.
Expires 03-31-2011

HDR Engineering, Inc.
5210 East Williams Circle, Suite 530
Tucson, AZ 85711-4459
(520) 584-3600

Pima County Department of Transportation

LA CHOLLA BLVD.
RUTHRAUFF RD. TO RIVER RD.
ROADWAY PLANS:
RUTHRAUFF RD.

Scales	Horiz. 1"=40' Vert. 1"=4'	Sheet	R8 of R16	Page	38 of 356

Project # 4LCITR

08\20\09 4:47:25 PM aledesma

012145
00000000059914
Pima_County_Dept_of_Transportation\PCDOT-La_Cholla_Blvd-Ruthrauff\13.00_CAD\Construction_Documents\Civil\07C-08.dgn

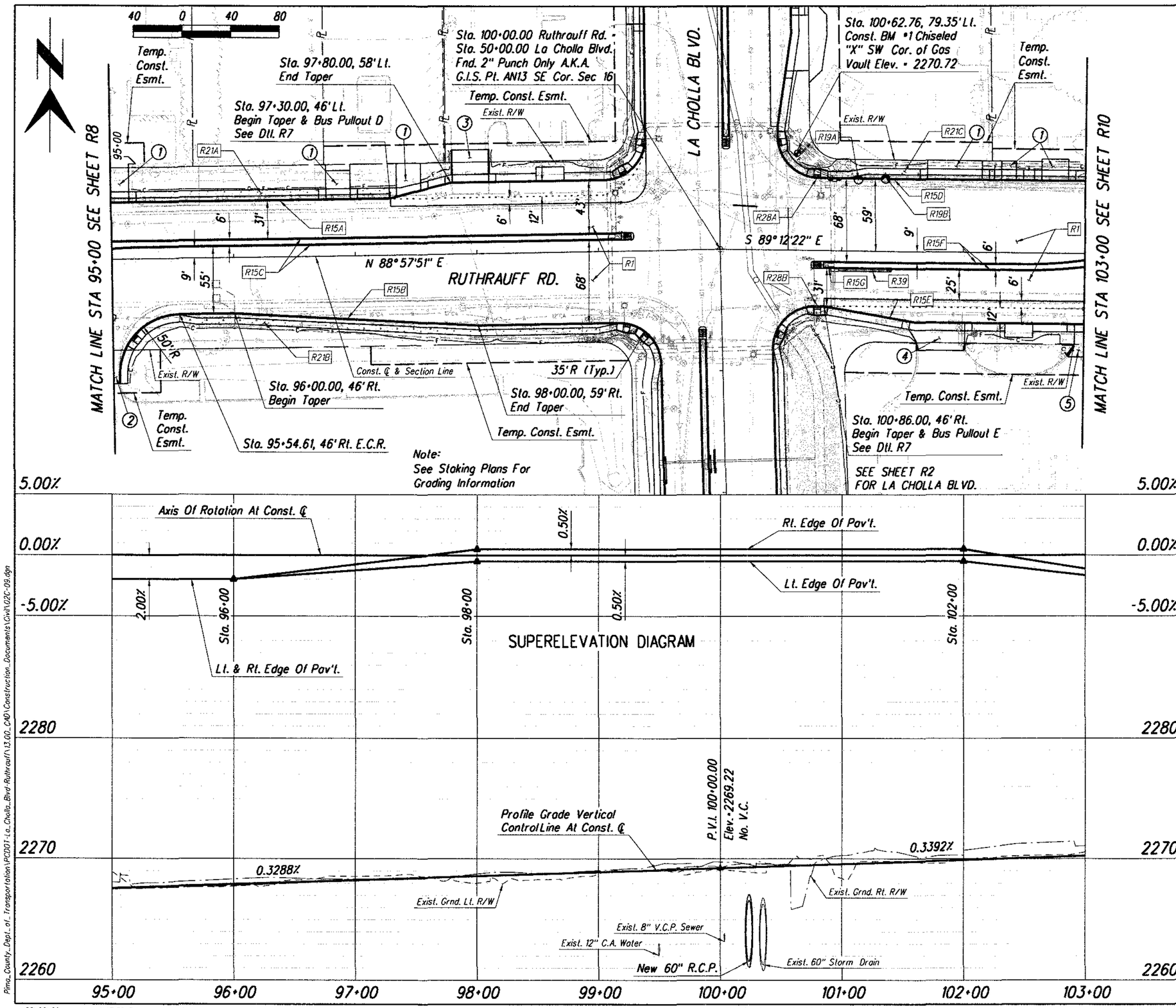

Item No.	Qty.	Unit	Description
R1	6049	S.Y.	Pav't. Struct. Sec. No. 1
R15	2112	L.F.	Conc. Curb PC/COT Std. Dtl. 209 Type 1, H=6"
A	279	L.F.	Lt.-Sta. 95+00.00 to 99+05.79 B.C.R. Except Driveway Locations
B	362	L.F.	Rt.-Sta. 95+54.61 E.C.R. to 99+15.54 E.C.R.
C	838	L.F.	Median-Sta. 95+00.00 to 99+29.00
D	101	L.F.	Lt.-Sta. 100+87.95 E.C.R. to 103+00.00 Except Driveway Locations
E	145	L.F.	Rt.-Sta. 100+89.44 E.C.R. to 103+00.00 Except Driveway Locations
F	374	L.F.	Median-Sta. 100+75.00 to 103+00.00
G	13	L.F.	Median-Sta. 100+85.00 15' Rt. to 100+97.77, 15' Rt.
R19	2	Each	Curb Conflict
A	1	Each	Sta. 101+13.27, 58.46' Lt. Manhole / Curb Conflict Sewer MH #9715-08, See Detail R26
B	1	Each	Sta. 101+35.61, 59.43' Lt. Valve / Curb Conflict, See Detail R39
R21	3206	S.F.	5' Conc. Sdwlk. PC/COT Std. Dtl. 200, 4" Thick
A	924	S.F.	Lt.-Sta. 95+00.00 to 99+05.74 B.C.R. Except Driveway and Bus Pullout Locations
B	1802	S.F.	Rt.-Sta. 95+54.61 E.C.R. to 99+24.58 B.C.R.
C	480	S.F.	Lt.-Sta. 100+87.95 to 103+00.00 Except Driveway Locations
R28	2	Each	Conc Curb Access Ramp See Detail R35, Type 1
A	1	Each	Sta. 100+78.95, 59.04' Rt.
B	1	Each	Sta. 100+80.49, 46.00' Rt.
R39	43	L.F.	Median-Sta. 100+97.77, 15' Rt. to 101+40.77, 15' Rt. Conc. Curb and Gutter, See Detail R37

Notes:

1. Driveway See Dtl. R1
2. Driveway See Dtl. R17
3. Driveway See Dtl. R18
4. Driveway See Dtl. R19
5. Driveway See Dtl. R20

Arizona Blue Stake
1-800-STAKE-IT
1-800-782-5348
Call Two Working Days Before You Dig

Priscilla S. Cornelio, P.E., Director

No.	Revision Description	Engineer	Date

		Date
Designed	L. Borelo	July/2009
Drawn	A. Ledesmo	July/2009
Checked	R. Britton	July/2009
Proj. Engr.	L. Borelo	Aug/2009

Expires 03-31-2011

HDR Engineering, Inc.
5210 East Williams Circle, Suite 530
Tucson, AZ 85711-4459
(520) 584-3600

Pima County Department of Transportation

LA CHOLLA BLVD.
RUTHRAUFF RD. TO RIVER RD.
ROADWAY PLANS:
RUTHRAUFF RD.

Scales: Horiz. 1"=40' Vert. 1"=4'

Sheet R9 of R16

012145
00000000005991
Pima_County_Dept_of_Transportation\PCDOT-La_Cholla_Blvd-Ruthrauff\13.00_CAD\Construction_Documents\Civil\02C-09.dgn
08\20\09 4:47:32 PM aledesmo
Project = 4LCITR

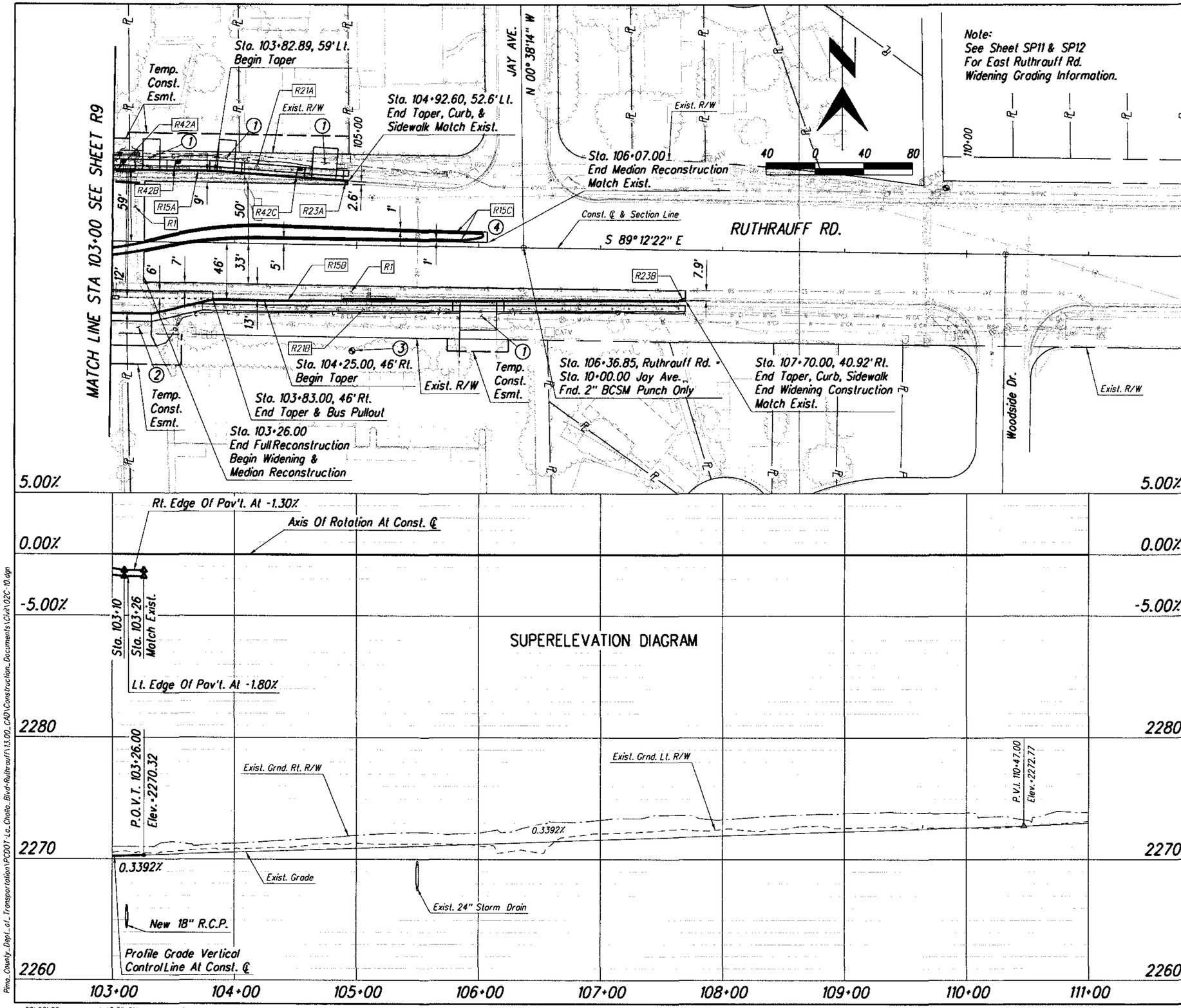

Item No.	Qty.	Unit	Description
R1	958	S.Y.	Pav't. Struct. Sec. No. 1
R15	1059	L.F.	Conc. Curb PC/COT Std. Dtl. 209 Type 1, H=6"
A	96	L.F.	Lt.-Sta. 103+00.00 to 104+92.60 Except Driveway Locations
B	349	L.F.	Rt.-Sta. 103+00.00 to 107+70.00 Except Driveway Locations
C	614	L.F.	Median-Sta. 103+00.00 to 106+07.00
R21	2310	S.F.	5' Conc. Sdwlk. PC/COT Std. Dtl. 200, 4" Thick
A	544	S.F.	Lt.-Sta. 103+00.00 to 104+92.60 Except Driveway Locations
B	1766	S.F.	Rt.-Sta. 103+74.67 to 107+70.00 Except Driveway Locations
R23	10	L.F.	Concrete Curb Transition Type 1 Curb to Type 1G Curb and Gutter, See Detail R38
A	5	L.F.	Sta. 104+88.45, 52.84' Lt. to Sta. 104+92.60, 52.60' Lt.
B	5	L.F.	Sta. 107+65.00, 41.00' Rt. to Sta. 107+70.00, 40.92' Rt.
R42	3	Each	Mail Receptacle PC/COT Std. Dtl. 102
A	1	Each	Sta. 103+05.00, 60.5' Lt., Size 1-A
B	1	Each	Sta. 103+50.00, 60.5' Lt., Size 1-A
C	1	Each	Sta. 104+50.00, 56.6' Lt., Size 2

Notes:

1. Driveway See Dtl. R1
2. Driveway See Dtl. R20
3. Sta. 104+97.66, 86.21' Rt. Const. BM #13 1/2" Rebar No Tag Elev. =2271.93
4. Curbed Median Nose PC/COT Std. Dtl. 214

Arizona Blue Stake
1-800-STAKE-IT
1-800-782-5348
Call Two Working Days Before You Dig

Priscilla S. Cornelio, P.E., Director

No.	Revision Description	Engineer	Date

		Date
Designed	L. Barela	July/2009
Drawn	A. Ledesma	July/2009
Checked	R. Britani	July/2009
Proj. Engr.	L. Barela	Aug/2009

37287 L.I. BARELA ARIZONA, U.S.A. Expires 03-31-2011

HDR Engineering, Inc.
5270 East Williams Circle, Suite 530
Tucson, AZ 85711-4459
(520) 584-3600

Pima County Department of Transportation

LA CHOLLA BLVD.
RUTHRAUFF RD. TO RIVER RD.
ROADWAY PLANS:
RUTHRAUFF RD.

Scales: Horiz. 1"=40' Vert. 1"=4'

Sheet R10 of R16

012145
000000000059914
Pima_County_Dept_of_Transportation\PCDOT-La_Cholla_Blvd-Ruthrauff\13.00_CAD\Construction_Documents\Civil\02C-10.dgn

08\20\09 4:47:39 PM oledesma

Project # 4LCITR

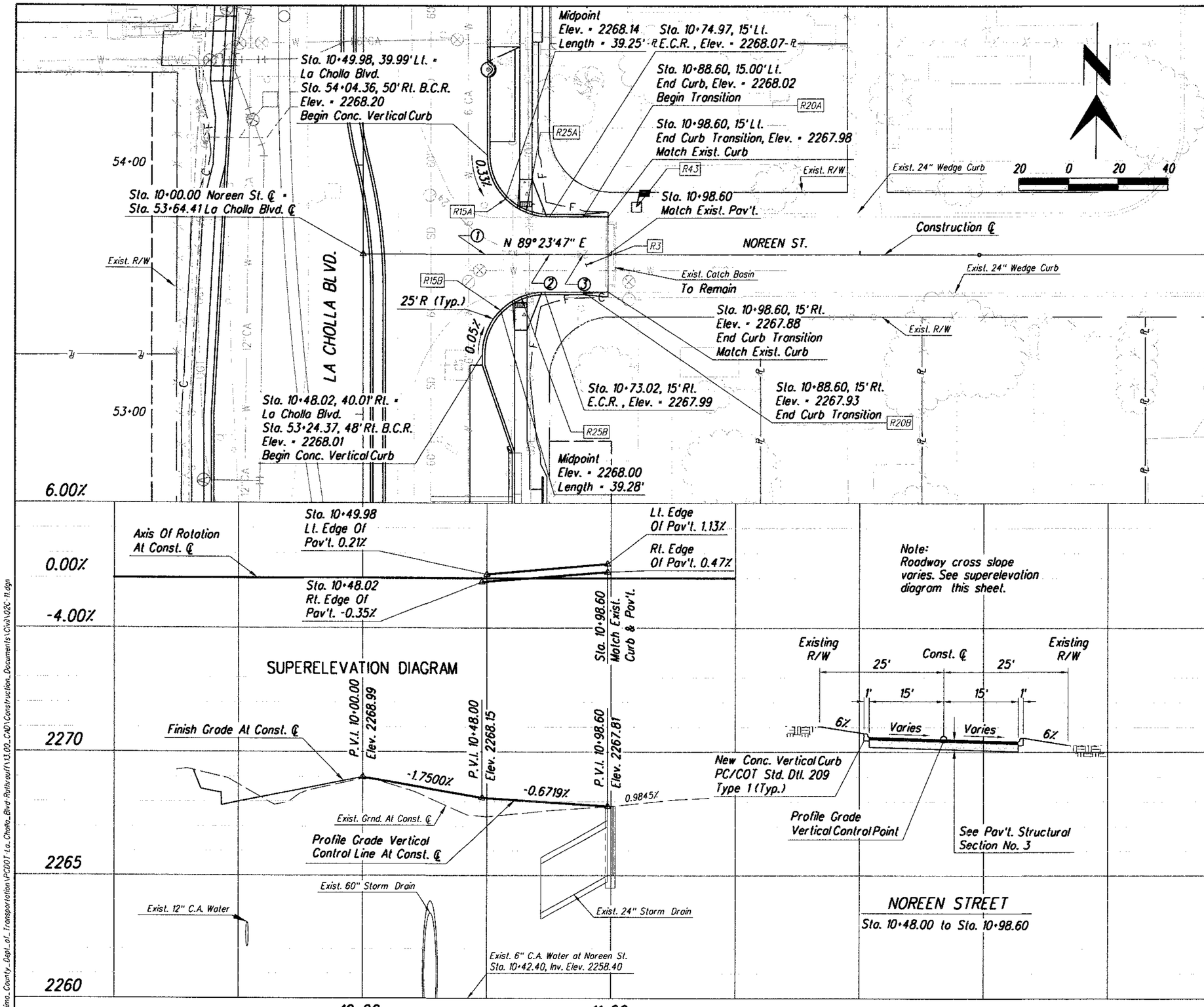

Item No.	Qty.	Unit	Description
R3	195	S.Y.	Pav't. Struct. Sec. No. 3
R15	108	L.F.	Conc. Curb PC/COT Std. Dtl. 209 Type 1, H=6"
A	53	L.F.	Lt.-Sta. 10+49.98 B.C.R. to 10+88.60
B	55	L.F.	Rt.-Sta. 10+48.02 B.C.R. to 10+88.60
R20	20	L.F.	Conc. Curb Transition PC/COT Std. Dtl. 210, Vertical to Wedge Curb
A	10	L.F.	Lt.-Sta. 10+88.60 to 10+98.60
B	10	L.F.	Rt.-Sta. 10+88.60, 15' Rt. to 10+98.60, 15' Rt.
R25	2	Each	Conc. Curb Access Ramp See Detail R35, Type 3
A	1	Each	Sta. 10+65.49, 16.87' Lt.
B	1	Each	Sta. 10+63.51, 16.88' Rt.
R43	1	Each	Sta. 11+10.00, 19' Lt., Mail Receptacle PC/COT Std. Dtl. 102, Type NDCBU with 13 Standard Compartments and 2 Parcel Compartments

Notes:

1. Sta. 10+49.00 = La Cholla Blvd
   Sta. 53+64.38, 48.00' Rt., Elev. = 2268.14
2. Sta. 10+75.49, Elev. = 2267.97
3. Sta. 10+88.60, Elev. = 2267.88

Arizona Blue Stake
1-800-STAKE-IT
1-800-782-5348
Call Two Working Days Before You Dig

Scales: Horiz. 1"=20' Vert. 1"=2'

Sheet R11 of R16

Page 41 of 356

Pima County Department of Transportation

Priscilla S. Cornelio, P.E., Director

LA CHOLLA BLVD.
RUTHRAUFF RD. TO RIVER RD.
SIDE STREET PLANS:
NOREEN ST.

No.	Revision Description	Engineer	Date

		Date
Designed	L. Barela	July/2009
Drawn	A. Young, D. Westenberg	July/2009
Checked	R. Brittain	July/2009
Proj. Eng.	L. Barela	Aug/2009

REGISTERED PROFESSIONAL ENGINEER (CIVIL) CERTIFICATE NO. 37287 L.J. BARELA DATE SIGNED 8-24-09 ARIZONA, U.S.A.
Expires 03-31-2011

HDR Engineering, Inc.
5210 East Williams Circle, Suite 530
Tucson, AZ 85711-4459
(520) 584-3600

Project = 4LCITR

012145
0000000000059814
Pima_County_Dept_of_Transportation\PCDOT-La_Cholla_Blvd-Ruthrauff\13.00_CAD\Construction_Documents\Civil\02C-11.dgn

08\20\09 4:47:45 PM aledesma

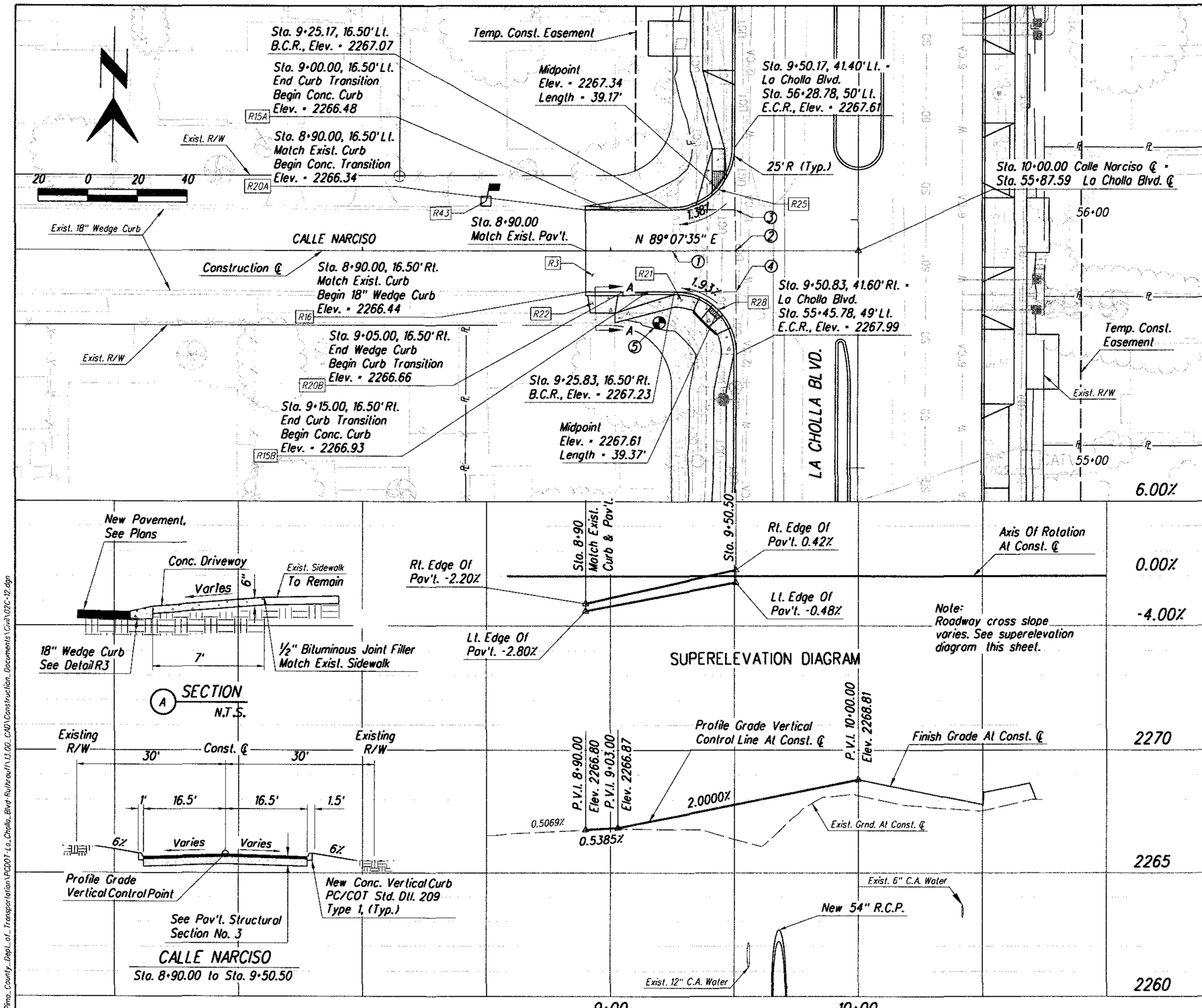

Item No.	Qty.	Unit	Description
R3	252	S.Y.	Pav't. Struct. Sec. No. 3
R15	115	L.F.	Conc. Curb PC/COT Std. Dtl. 209 Type 1, H=6"
A	65	L.F.	Lt.-Sta. 9+00.00 to 9+50.17 E.C.R.
B	50	L.F.	Rt.-Sta. 9+15.00 to 9+50.83 E.C.R.
R16	15	L.F.	Rt.-Sta. 8+90.00 to 9+05.00, 18" Conc. Wedge Curb, See Detail R3
R20	20	L.F	Conc. Curb Transition, 6" Vertical to 18" Wedge, See Detail R4
A	10	L.F.	Lt.-Sta. 8+90.00 to 9+00.00
B	10	L.F.	Rt.-Sta. 9+05.00 to 9+15.00
R21	200	S.F.	Sta. 9+01.85, 25' Rt. to 9+50.83, 41.60' Rt. E.C.R., Except Curb Access Ramp, 5' Conc. Sdwlk. PC/COT Std. Dtl. 200, 4" Thick
R22	77	S.F.	Sta. 8+90.80, 18' Rt. to 9+03.00, 18' Rt., Remove and Replace Exist. Conc. Driveway, 6" Thick
R25	1	Each	Sta. 9+43.60, 24.61' Lt., Conc. Curb Access Ramp See Detail R35, Type 3
R28	1	Each	Sta. 9+43.54, 23.86' Rt., Conc. Curb Access Ramp See Detail R35, Type 1
R43	1	Each	Sta. 8+50.00, 20' Lt., Mail Receptacle, PC/COT Std. Dtl. 102, Type NDCBU with 13 Standard Compartments and 2 Parcel Compartments

Notes:

1. Sta. 9+25.00, Elev. = 2267.31
2. Sta. 9+50.50 = La Cholla Blvd. Sta. 55+87.39, 49.50' Lt., Elev. 2267.82
3. Sta. 9+50.37, 16.50' Lt. = La Cholla Blvd. Sta. 56+03.89, 49.70' Lt., Elev. 2267.74
4. Sta. 9+50.63, 16.50' Rt. = La Cholla Blvd. Sta. 55+70.89, 49.30' Lt., Elev. 2267.89
5. Sta. 9+19.68, 28.87' Rt. Const. BM #2, "X" Chiseled At Back of Sidewalk 4'± West of B.C.R.

Arizona Blue Stake
1-800-STAKE-IT
1-800-782-5348
Call Two Working Days Before You Dig

No.	Revision Description	Engineer	Date

		Date
Designed	L. Barela	July/2009
Drawn	A. Young, D. Westenberg	July/2009
Checked	R. Britton	July/2009
Proj. Engr.	L. Barela	Aug/2009

Priscilla S. Cornelio, P.E., Director

Pima County Department of Transportation

Registered Professional Engineer (Civil) 37267 L.E. BARELA Date Signed 8-24-09 Arizona, U.S.A.
Expires 03-31-2011

HDR Engineering, Inc.
5210 East Williams Circle, Suite 530
Tucson, AZ 85711-4459
(520) 584-3600

LA CHOLLA BL VD.
RUTHRAUFF RD. TO RIVER RD.
SIDE STREET PLANS:
CALLE NARCISO

Scales	Horiz. 1"=20' Vert. 1"=2'	Sheet	R12 of R16	Page	42 of 356

012145
0000000000059914
Pima_County_Dept_of_Transportation\PCDOT-La_Cholla_Blvd-Ruthrauff\13.00_CAD\Construction_Documents\Civil\02C-12.dgn

08\20\09 4:47:50 PM aledesma

Project = 4LCITR

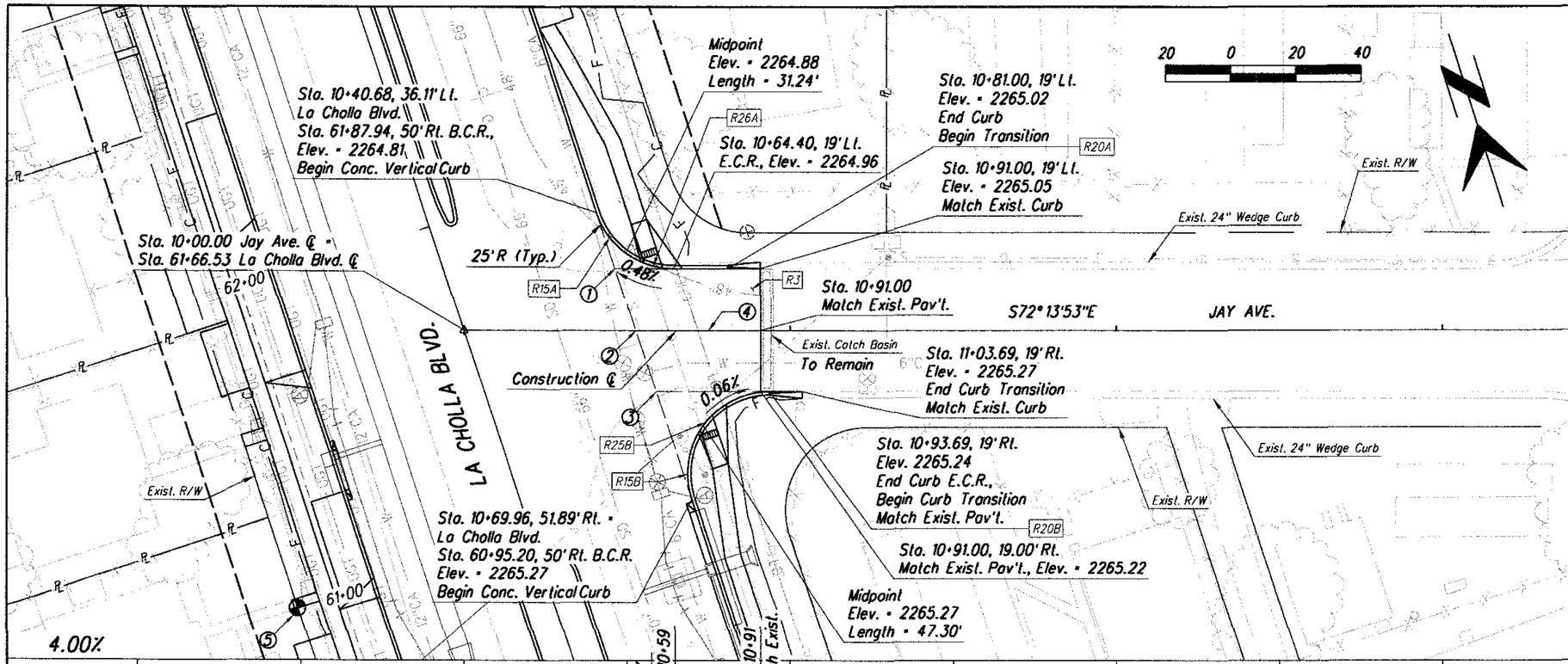

Item No.	Qty.	Unit	Description
R3	199	S.Y.	Pav't. Struct. Sec. No. 3
R15	96	L.F.	Conc. Curb PC/COT Std. Dtl. 209 Type 1, H-6"
A	48	L.F.	Lt.-Sta. 10+40.63 B.C.R. to 10+81.00
B	48	L.F.	Rt.-Sta. 10+69.96 B.C.R. to 10+93.69 E.C.R.
R20	20	L.F	Conc. Curb Transition PC/COT Std. Dtl. 210
A	10	L.F.	Lt.-Sta. 10+81.00 to 10+91.00
B	10	L.F.	Rt.-Sta. 10+93.69 to 11+03.69
R25	2	Each	Conc. Curb Access Ramp See Detail R35, Type 3
A	1	Each	Sta. 10+58.13, 19.80' Lt.
B	1	Each	Sta. 10+74.23, 28.30' Rt.

Notes:

1. Sta. 10+46.37, 19' Lt. = La Cholla Blvd. Sta. 61+69.92, 50.00' Rt., Elev. = 2264.90
2. Sta. 10+52.70 = La Cholla Blvd. Sta. 61+49.89, 50.00' Rt., Elev. = 2265.00
3. Sta. 10+59.02, 19' Rt. = La Cholla Blvd. Sta. 61+29.87, 50.00' Rt., Elev. = 2265.10
4. Sta. 10+75.00, Elev. = 2265.06
5. Sta. 9+49.22, 85.21' Rt. Const. BM #3, "X" Chiseled SE Corner of Sidewalk

No.	Revision Description	Engineer	Date

		Date
Designed	L. Barela	July/2009
Drawn	A. Young, D. Westenberg	July/2009
Checked	R. Britton	July/2009
Proj. Engr.	L. Barela	Aug/2009

Registered Professional Engineer (Civil) CERTIFICATE NO. 37267 L.E. BARELA Date Signed 8-7-09 ARIZONA, U.S.A.

Expires 03-31-2011

HDR Engineering, Inc.
5210 East Williams Circle, Suite 530
Tucson, AZ 85711-4459
(520) 584-3600

LA CHOLLA BLVD.
RUTHRAUFF RD. TO RIVER RD.
SIDE STREET PLANS:
JAY AVE

Pima County Department of Transportation

Priscilla S. Cornelio, P.E., Director

Arizona Blue Stake
1-800-STAKE-IT
1-800-782-5348
Call Two Working Days Before You Dig

Scales	Horiz. 1"=20' Vert. 1"=2'	Sheet	R13 of R16	Page	43 of 356

012145
0000000000059914
Pima_County_Dept._of_Transportation\PCDOT-La_Cholla_Blvd-Ruthrauff\13.00_CAD\Construction_Documents\Civil\02C-13.dgn

08\20\09 4:47:56 PM aledesma

Project # 4LCITR

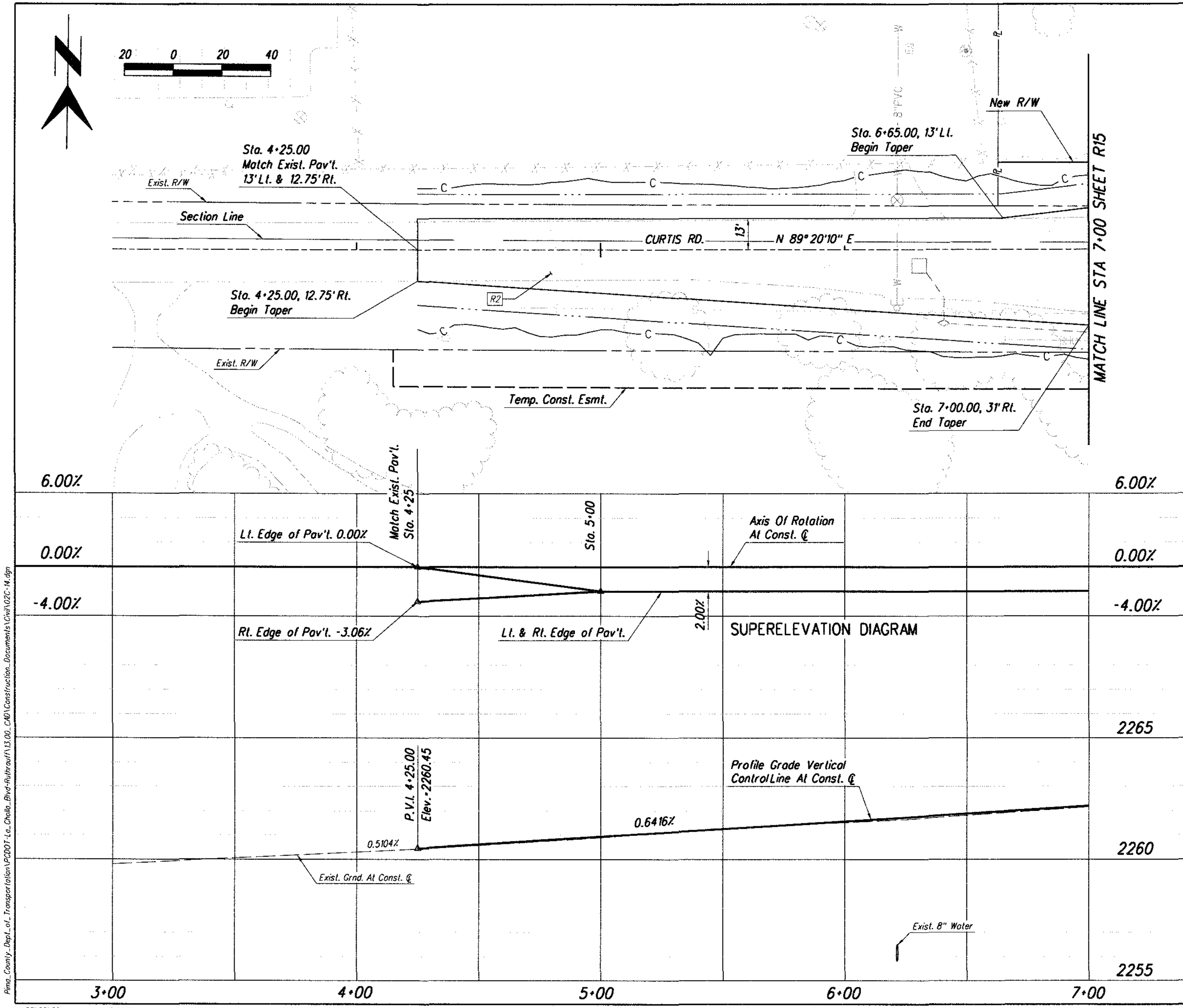

Qty.	Unit	Description
R2 1074	S.Y.	Pav't. Struct. Sec. No. 2

Arizona Blue Stake
1-800-STAKE-IT
1-800-782-5348
Call Two Working Days Before You Dig

Priscilla S. Cornelio, P.E., Director

No.	Revision Description	Engineer	Date

		Date
Designed	L. Barela	July/2009
Drawn	J. Anais	July/2009
Checked	R. Britton	July/2009
Proj. Engr.	L. Barela	Aug/2009

Expires 03-31-2011

HDR Engineering, Inc.
5210 East Williams Circle, Suite 530
Tucson, AZ 85711-4459
(520) 584-3600

Pima County Department of Transportation

LA CHOLLA BLVD.
RUTHRAUFF RD. TO RIVER RD.
SIDE STREET PLANS:
CURTIS ROAD

Scales	Horiz. 1"=20' Vert. 1"=2'	Sheet	R14 of R16	Page	44 of 356

Project • 4LCITR

012145
G000000000059914
Pima_County_Dept_of_Transportation\PCDOT-La_Cholla_Blvd-Ruthrauff\13.00_CAD\Construction_Documents\Civil\02C-14.dgn

08\20\09 4:48:01 PM aledesma

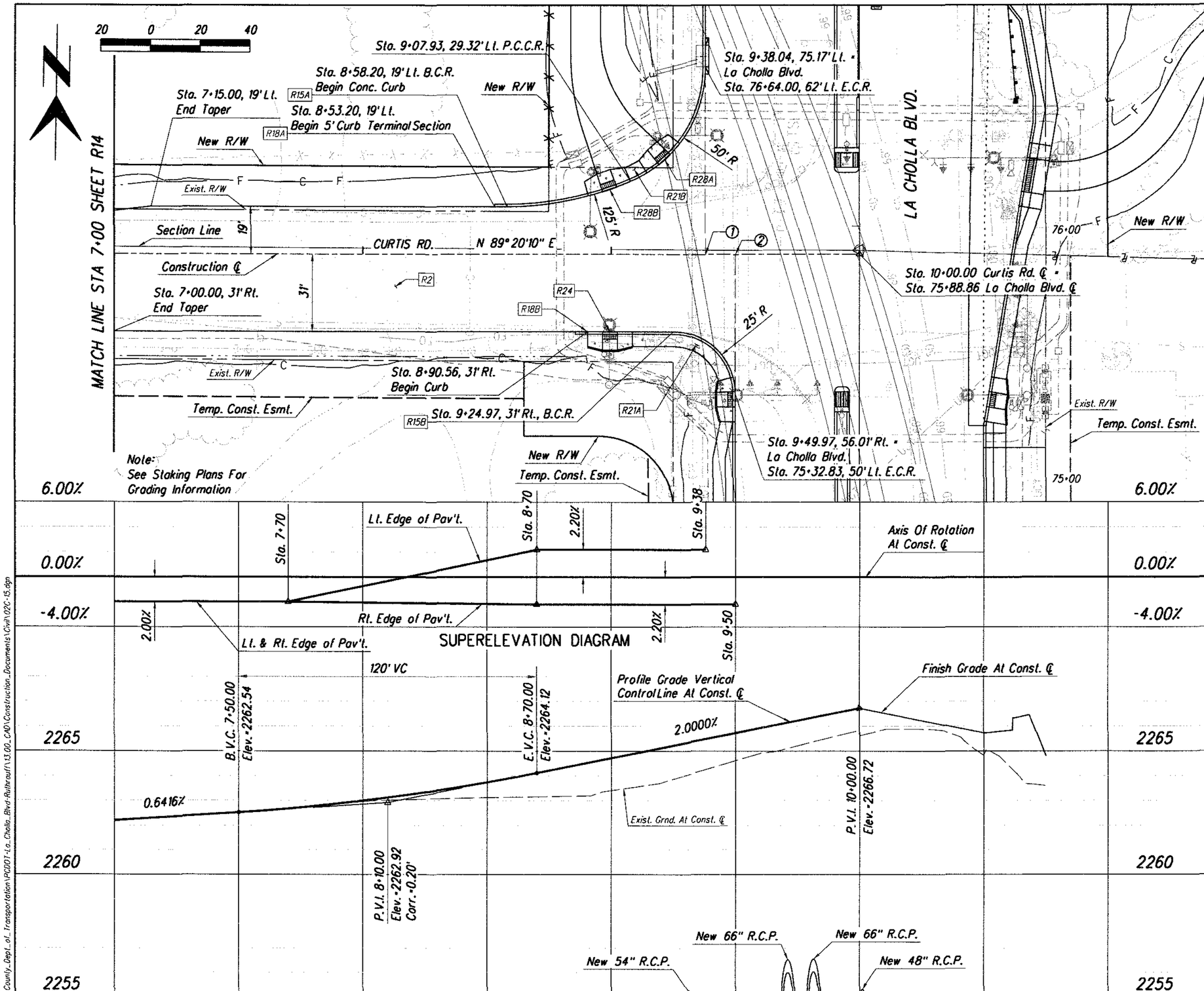

Item No.	Qty.	Unit	Description
R2	1472	S.Y.	Pav't. Struct. Sec. No. 2
R15	184	L.F.	Conc. Curb PC/COT Std. Dtl. 209 Type 1, H=6"
A	110	L.F.	Lt.-Sta. 8+58.20 to 9+38.04 E.C.R.
B	74	L.F.	Rt.-Sta. 8+90.56 to 9+49.97 E.C.R.
R18	2	Each	5' Conc. Curb Terminal Section See PC/COT Std. Dtl. 212
A	1	Each	Sta. 8+53.20, 19' Lt. to Sta. 8+58.20, 19' Lt.
B	1	Each	Sta. 8+85.56, 31' Rt. to Sta. 8+90.56, 31' Rt.
R21	257	S.F	PC/COT Std. Dtl. 200, 4" Thick
A	222	S.F.	Rt.-Sta. 9+08.56 to 9+48.09
B	35	S.F.	Lt.-Sta. 9+07.54 to 9+13.97
R24	1	Each	Sta. 8+99.56, 31' Rt. Conc. Curb Access Ramp See Detail R35, Type 2
R28	2	Each	Conc. Curb Access Ramp COT See Detail 35, Type 1, Do Not Install Ramp Curb
A	1	Each	Lt.-Sta. 9+21.67, 38.19' Lt.
B	1	Each	Lt.-Sta. 8+99.56, 26.04' Lt.

Notes:
1. Sta. 9+38.00
2. Sta. 9+50.00

Arizona Blue Stake
1-800-STAKE-IT
1-800-782-5348
Call Two Working Days Before You Dig

Priscilla S. Cornelio, P.E., Director

No.	Revision Description	Engineer	Date

		Date
Designed	L. Barela	July/2009
Drawn	L. Amos	July/2009
Checked	R. Britton	July/2009
Proj. Engr.	L. Barela	Aug/2009

Registered Professional Engineer (Civil) No. 37267 L.E. BARELA Arizona U.S.A. Expires 03-31-2011

HDR Engineering, Inc.
5210 East Williams Circle, Suite 530
Tucson, AZ 85711-4459
(520) 584-3600

Pima County Department of Transportation

LA CHOLLA BLVD.
RUTHRAUFF RD. TO RIVER RD.
SIDE STREET PLANS:
CURTIS ROAD

Scales: Horiz. 1"=20' Vert. 1"=2'

Sheet R15 of R16

012145
0000000000059914
Pima_County_Dept._of_Transportation\PC001-La_Cholla_Blvd-Ruthrauff\13.00_CAD\Construction_Documents\Civil\020-15.dgn

08\20\09 4:48:05 PM aledesma

Project • 4LCITR

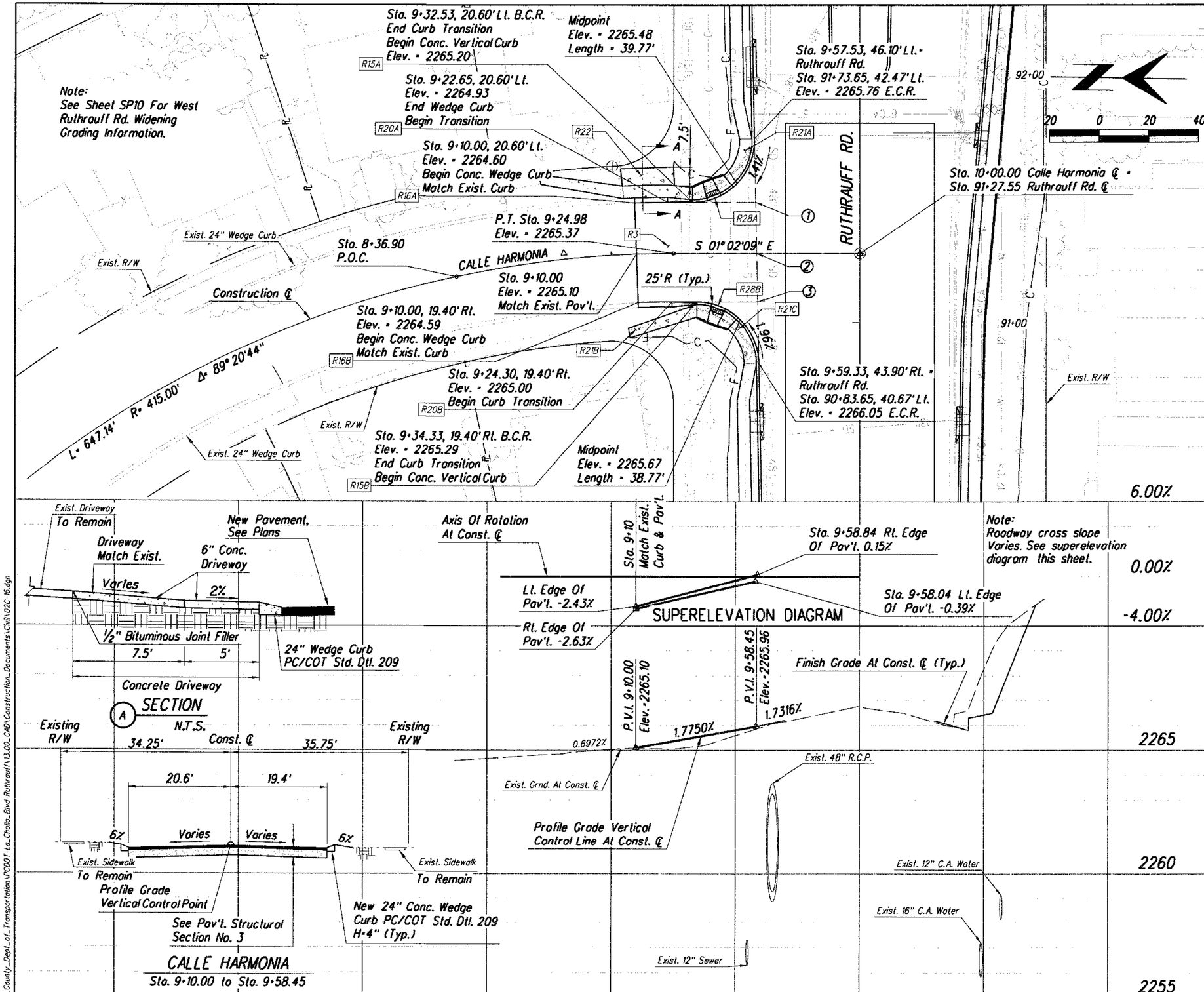

Item No.	Qty.	Unit	Description
R3	245	S.Y.	Pav't. Struct. Sec. No. 3
R15	79	L.F.	Conc. Curb PC/COT Std. Dtl. 209 Type 1, H=6"
A	40	L.F.	Lt.-Sta. 9+32.53 B.C.R. to 9+57.53 E.C.R.
B	39	L.F.	Rt.-Sta. 9+34.33 B.C.R. to 9+59.33 E.C.R.
R16	27	L.F.	24" Conc. Wedge Curb PC/COT Std. Dtl. 209
A	13	L.F.	Lt.-Sta. 9+10.00 to 9+22.65
B	14	L.F.	Rt.-Sta. 9+10.00 to 9+24.30
R20	20	L.F.	Conc. Curb Transition PC/COT Std. Dtl. 210
A	10	L.F.	Lt.-Sta. 9+22.65 to 9+32.53 B.C.R.
B	10	L.F.	Rt.-Sta. 9+24.30 to 9+34.33 B.C.R.
R21	489	S.F	5' Conc. Sdwlk. PC/COT Std. Dtl. 200, 4" Thick
A	277	S.F.	Lt.-Sta. 8+75.00 to 9+57.53 E.C.R. Except At Driveway And Curb Access Ramp
B	123	S.F.	Rt.-Sta. 9+05.49 to 9+34.33 B.C.R.
C	89	S.F.	Rt.-Sta. 9+50.82 to 9+59.33 E.C.R. 6" Thick
R22	254	S.F.	Sta. 9+05.60, 22.5' Lt. to 9+24.93, 34.8' Lt. Remove And Replace Exist. Conc. Driveway, 6" Thick
R28	2	Each	Conc. Curb Access Ramp See Detail R35, Type 1
A	1	Each	Lt.-Sta. 9+41.54, 22.30' Lt.
B	1	Each	Rt.-Sta. 9+42.95, 20.95' Rt.

Notes:

1. Sta. 9+58.04, 20.60' Lt. = La Cholla Blvd. Sta. 91+48.15, 41.96' Lt., Elev. 2265.87
2. Sta. 9+58.45 = La Cholla Blvd. Sta. 91+27.55, 41.55' Lt., Elev. 2265.96
3. Sta. 9+58.84, 19.40' Rt. = La Cholla Blvd. Sta. 91+08.15, 41.16' Lt., Elev. 2266.00

Arizona Blue Stake
1-800-STAKE-IT
1-800-782-5348
Call Two Working Days Before You Dig

Pima County Department of Transportation

Priscilla S. Cornelio, P.E., Director

No.	Revision Description	Engineer	Date

		Date
Designed	L. Barela	July/2009
Drawn	A. Young, D. Westenberg	July/2009
Checked	R. Brittain	July/2009
Proj. Engr.	L. Barela	Aug/2009

REGISTERED PROFESSIONAL ENGINEER (CIVIL) CERTIFICATE NO. 37267 L.E. BARELA DATE SIGNED 8-24-09 ARIZONA, U.S.A.
Expires 03-31-2011

HDR Engineering, Inc.
5210 East Williams Circle, Suite 530
Tucson, AZ 85711-4459
(520) 584-3600

LA CHOLLA BLVD.
RUTHRAUFF RD. TO RIVER RD.
SIDE STREET PLANS:
CALLE HARMONIA

Scales	Horiz. 1"=20' Vert. 1"=2'	Sheet	R16 of R16	Page	46 of 356

012145
00000000005994
Pima_County_Dept_of_Transportation\PCDOT-La_Cholla_Blvd-Ruthrauff\13.00_CAD\Construction_Documents\Civil\02C-16.dgn

08\20\09 4:48:11 PM cledesma

Project = 4LCITR

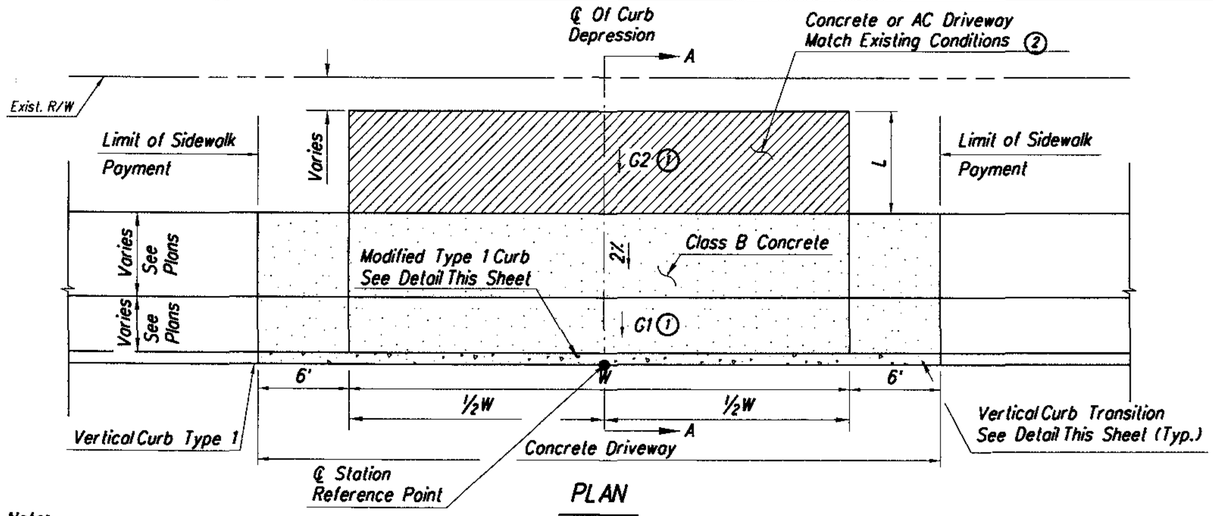

PLAN

N.T.S.

Note:
See PC/COT Std. Dtl. 206 for information not shown

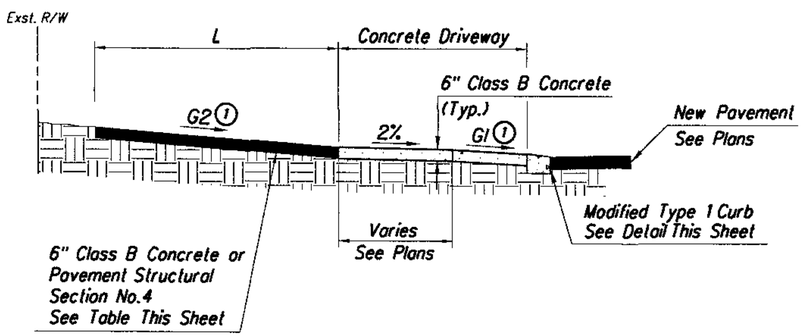

(A) SECTION

N.T.S.

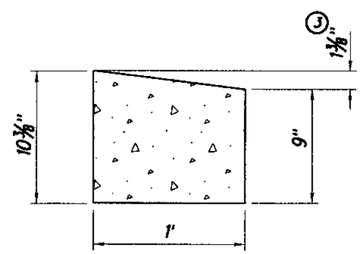

MODIFIED TYPE 1 CURB DETAIL (4)

N.T.S.

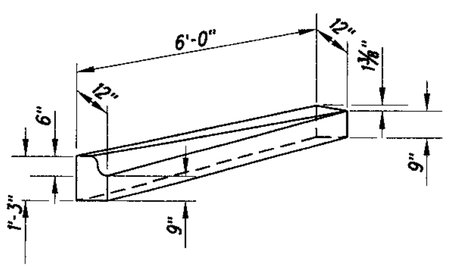

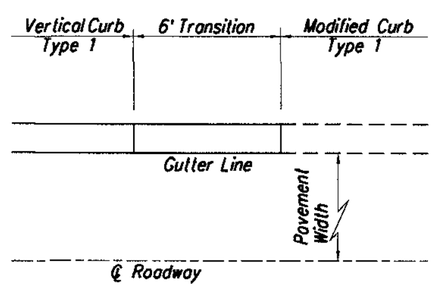

CURB TRANSITION (4)
Vertical Curb Type 1 to Modified Curb Type 1

N.T.S.

Driveway Parameters

	℄ Station	Curb W (Feet)	Trans. Width (L.F.)	L (Feet)	G1 (1) (%)	G2 (1) (%)	Concrete Driveway (S.F.)	AC Pvmt (S.Y.)	Comments
La Cholla Boulevard	47+40.63 Rt.	35.75	12		2.00		382		See Detail R12
	47+71.00 Lt.	29	12	16	2.00	0.50	328	52	
	51+67.50 Rt.	45	12	23		6.09	342	136	See Sheet SP4
	51+99.70 Lt.	30	12	6	6.00	4.12	336	20	
	52+33.00 Rt.	14	12	28		6.06	156	44	
	54+47.00 Lt.	14	12	20	2.00	-2.79	208	31	
	62+97.50 Rt.	14	12	16	6.00	3.64	208	25	
	65+04.00 Rt.	30	12	12.6		-4.10	210	42	Match Catch Basin
	66+18.50 Rt.	22	12	9	2.00	1.40	272	22	Match Catch Basin
	68+13.00 Rt.	22	12	6	2.00	2.06	272	15	
	69+36.15 Rt.	16	12	16	2.00	4.78	224	29	
	70+64.00 Rt.	50	12	29	2.00	0.27	496	110	See Detail R31
	71+36.00 Rt.	16	12	18	2.00	-0.85	224	32	
	71+91.00 Rt.	18	12	16	2.00	1.07	240	32	
	72+96.00 Rt.	50	12	16	2.00	-1.12	496	70	See Detail R31
	73+86.00 Rt.	24	12	1	2.00	3.06	288	3	
	74+96.00 Rt.	30	12	16	2.00	-4.44	336	54	
	76+19.85 Rt. (3)	14	12		2.00		208		See Sheet BP5
	85+30.00 Lt.	12	12		2.00		144		See Sheet BP9
	86+07.00 Rt.	24	12		2.00		288		See Detail R15
	86+77.00 Lt.	36	12		2.00		384		See Detail R16
SUB-TOTAL		546	252				6042	730	
Ruthrauff Road	89+70.00 Lt.	22	12	8	6.00	-1.36	273	20	
	92+83.00 Lt.	22	12	12	2.00	1.49	272	30	
	95+00.00 Lt.	30	12	29	6.00	5.97	336	99	See Detail R17
	96+87.00 Lt.	20	12	15	6.00	3.45	256	34	
	97+45.00 Lt.	20	12	20		2.62	203	41	End Driveway At R/W
	97+95.87 Lt.	29.75	12				252		See Detail R18
	101+81.00 Rt.	45	12				345		See Detail R19
	101+92.50 Lt.	45	12	7	2.00	-0.80	456	35	
	102+37.00 Lt.	12	12	7	6.00	5.02	192	10	
	102+75.00 Lt.	22	12	9	6.00	6.75	272	22	
	103+13.00 Rt.	40.75	12				321		See Detail R20
	103+31.00 Lt.	14	12	17	6.00	5.16	208	27	
	103+92.22 Lt.	14	12	17.6	6.00	5.82	211	28	
	104+72.71 Lt.	20	12	17.3	6.00	6.31	256	39	
	106+00.50 Rt.	30	12	15	6.00	5.14	336	51	
SUB-TOTAL		387	180				4189	436	
TOTAL		933	432				10231	1166	

(1) Positive grades reflect a driveway sloping downwards towards the main road. Negative grades reflect a driveway sloping downwards away from the main road.

(2) If existing driveway material is anything other than concrete, then use specified pavement structural section for driveway limits.

(3) Modified Type 1 curb for driveway Sta. 76+19.85 Rt. is flat so it can be utilized as a curb access ramp. This driveway will also require a 2' wide detectable warning strip for the entire width, and beginning at the back of curb. See Detail R35 for Detectable Warning Strip Information.

(4) Modified Type 1 curb and curb transitions will be paid under Bid Item No. 9080001.

DETAIL R1

DRIVEWAY DETAIL

Arizona Blue Stake
1-800-STAKE-IT
1-800-782-5348
Call Two Working Days Before You Dig

Pima County Department of Transportation
Priscilla S. Cornelio, P.E., Director

		Date
Designed	L. Barela	July/2009
Drawn	A. Young Jr., D. Westenberg	July/2009
Checked	R. Brittain	July/2009
Proj. Engr.	L. Barela	Aug/2009

No.	Revision Description	Engineer	Date

Expires 03-31-2011

HDR Engineering, Inc.
5210 East Williams Circle, Suite 530
Tucson, AZ 85711-4459
(520) 584-3600

LA CHOLLA BL VD.
RUTHRAUFF RD. TO RIVER RD.
ROADWAY DETAILS
DRIVEWAY DETAIL R1

Scales		Sheet	RD1 of RD33	Page	47 of 356

012145
0000000000059914
Pima_County_Dept_of_Transportation\PCDOT-La_Cholla_Blvd-Ruthrauff\13.00_CAD\Construction_Documents\Civil\17C-01.dgn

08\20\09 4:48:17 PM aledesma

Project • 4LCITR

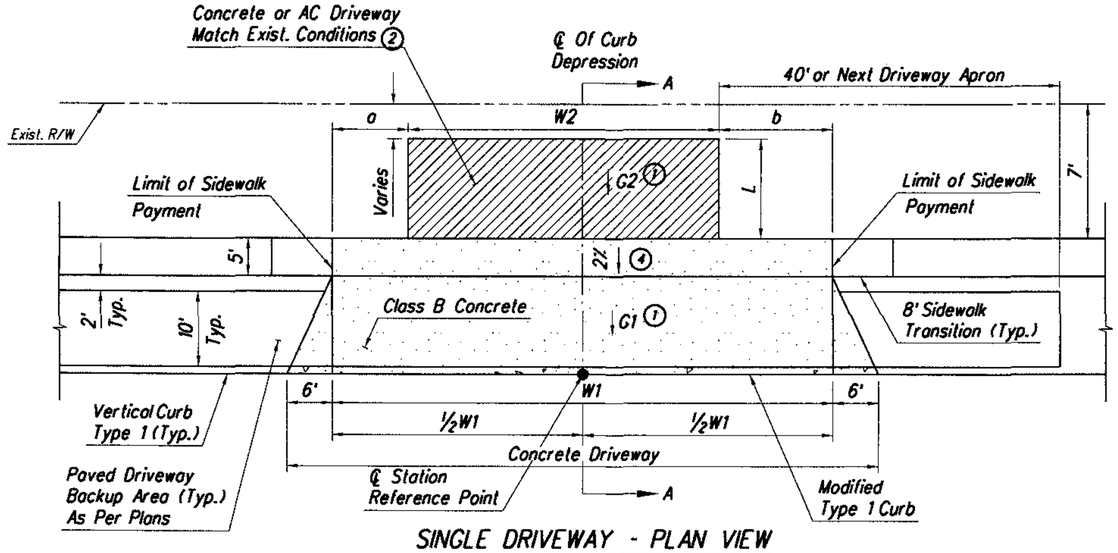

SINGLE DRIVEWAY - PLAN VIEW

N.T.S.

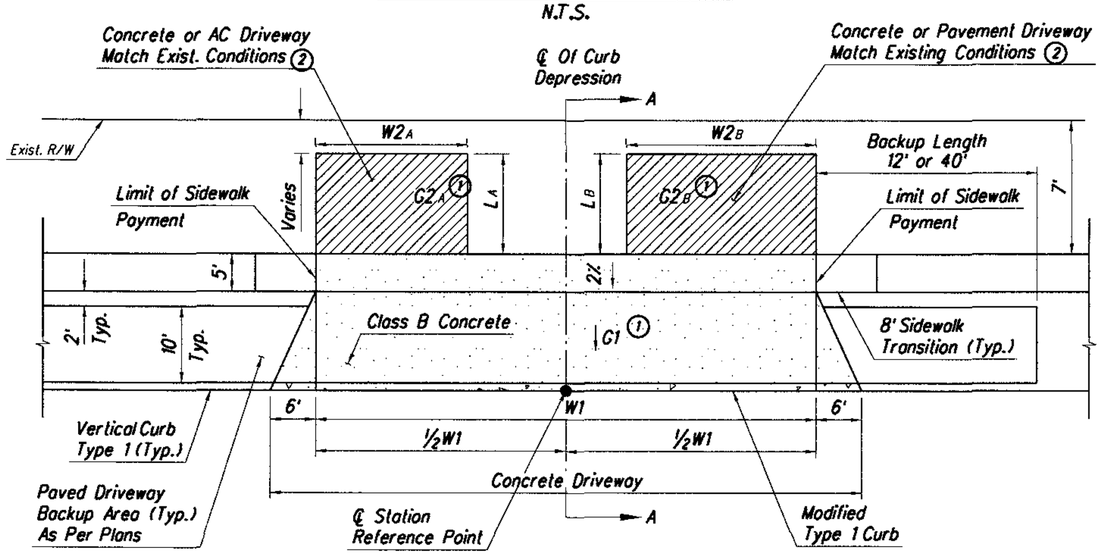

DOUBLE DRIVEWAY - PLAN VIEW

N.T.S.

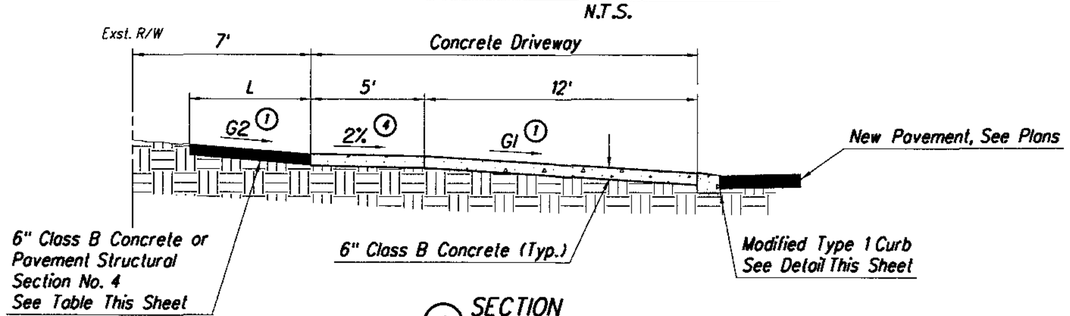

(A) SECTION

N.T.S.

Driveway Parameters

La Cholla Boulevard

℄ Station		Curb W1 (Feet)	Trans. Width (Feet)	G1 (1) (%)	W2 (Feet)	G2 (1) (%)	a	b	L (FEET)	Concrete Driveway (S.F.)	AC Pvmt (S.Y.)	SEE DETAIL THIS SHEET
54+58.00 Rt.		24	12	2.00	22	1.85	0	2	4	475	10	Single Driveway
55+41.00 Rt. (4)		30	12	0.93	22	0.93	2	6	13	577	32	Single Driveway
55+95.00 Rt. (4)		28	12	0.38	22	0.38	0	6	9	543	22	Single Driveway
56+53.00 Rt.		28	12	2.00	22	1.37	0	6	1	543	3	Single Driveway
56+73.00 Lt.		26	12	2.00	14	-2.71	6	6	17	747		Single Driveway
57+01.00 Rt.		28	12	2.00	22	0.99	0	6	10	543	25	Single Driveway
57+19.00 Lt.		30	12	2.00	30	1.77	0	0	15	577	50	Single Driveway
57+58.00 Rt. (4)		28	12	1.39	22	1.39	0	6	6	543	15	Single Driveway
58+30.00 Lt.		28	12	5.12	22	2.00	0	6	7	697		Single Driveway
58+45.00 Rt.		28	12	4.67	22	2.00	0	6	3	543	8	Single Driveway
58+96.00 Rt.		28	12	4.56	22	2.00	0	6	5	543	13	Single Driveway
59+00.00 Lt.		30	12	4.08	27	2.00	0	3	7	577	21	Single Driveway
59+35.50 Rt.		24	12	2.66	12	2.00	6	6	5	475	7	Single Driveway
59+74.00 Lt.		30	12	5.78	28	2.00	0	2	7	577	22	Single Driveway
60+20.00 Lt.		30	12	6.00	10	3.55	14	6	15	577	17	Single Driveway
60+81.00 Lt.		26	12	5.00	20	3.87	0	6	12	509	27	Single Driveway
61+91.50 Lt.	A	43	12	5.00	21	5.88	N/A	N/A	9	987		Double Driveway
	B				21	5.08	N/A	N/A	13		31	40' Backup Length
63+13.00 Lt.	A	40	12	5.22	12	2.00	N/A	N/A	7	747	10	Double Driveway
	B				12	3.72	N/A	N/A	7		10	12' Backup Length
TOTAL		531	216							10772	323	

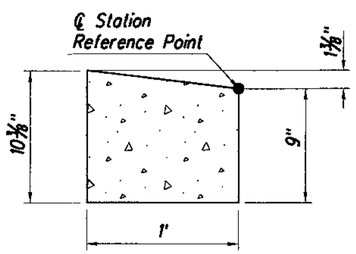

MODIFIED TYPE 1
CURB DETAIL (3)

N.T.S.

(1) Positive grades reflect a driveway sloping downwards towards the main road. Negative grades reflect a driveway sloping downwards away from the main road.

(2) If existing driveway material is anything other than concrete, then use specific pavement structural section for driveway limits.

(3) Modified Type 1 Curb and Curb Transitions will be paid under Bid Item No. 9080001.

(4) Sidewalk slope matches G1 and G2 grades for their respective driveways.

Note:
See PC/COT Std. Dtl. 206 for information not shown

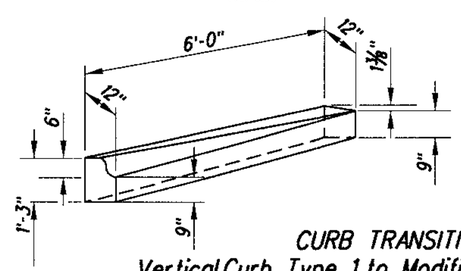

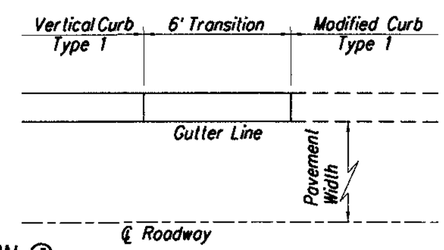

CURB TRANSITION (3)
Vertical Curb Type 1 to Modified Curb Type 1

N.T.S.

DETAIL R2

FRONTING RESIDENTIAL DRIVEWAY DETAIL

Arizona Blue Stake
1-800-STAKE-IT
1-800-782-5348
Call Two Working Days Before You Dig

	Date
Designed	July/2009
Drawn	July/2009
Checked	July/2009
Proj. Engr.	Aug/2009

L. Bareto
A. Ledesma, D. Westenberg
R. Brillum
L. Bareto

No.	Revision Description	Engineer	Date

Priscilla S. Cornelio, P.E., Director

Pima County Department of Transportation

HDR Engineering, Inc.
5210 East Williams Circle, Suite 530
Tucson, AZ 85711-4459
(520) 584-3500

LA CHOLLA BLVD.
RUTHRAUFF RD. TO RIVER RD.
ROADWAY DETAILS
DRIVEWAY DETAIL R2

Scales | Sheet RD2 of RD33 | Page 48 of 356

012145
0000000000059914
Pima_County_Dept_of_Transportation\PCD01-La_Cholla_Blvd-Ruthrauff\13.00_CAD\Construction_Documents\Civil\17C-02.dgn

08\20\09 4:48:22 PM aledesma

Project # 4LCITR

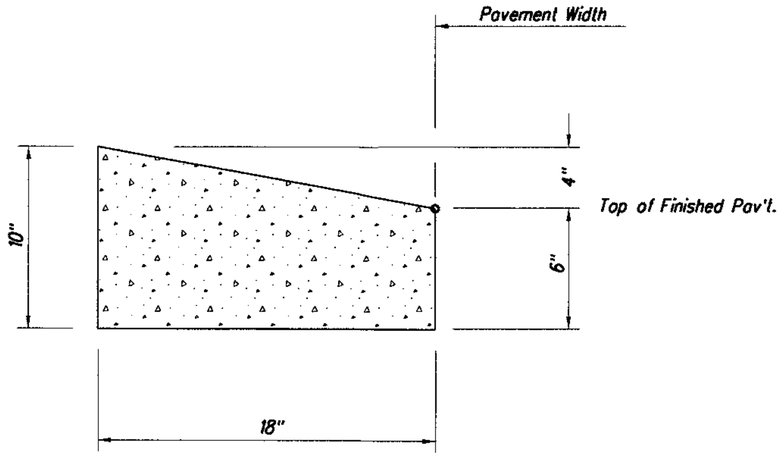

18" WEDGE CURB

N.T.S.

Note:
See PC/COT Std. Dtl. 209 for information not shown.

This 18" Wedge Curb shall be paid for under Bid Item No. 9080006.

DETAIL R3

18" WEDGE CURB

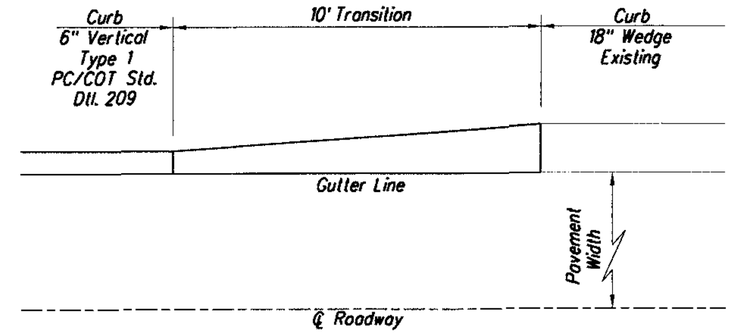

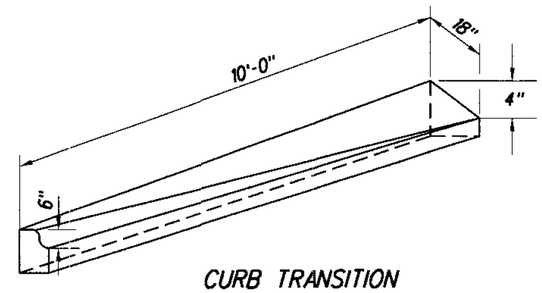

Note:
See PC/COT Std. Dtl. 210 for information not shown

This Curb Transition shall be paid for under Bid Item No. 9080112.

CURB TRANSITION
6" Vertical Curb to 18" Wedge Curb

N.T.S.

DETAIL R4

CURB TRANSITION

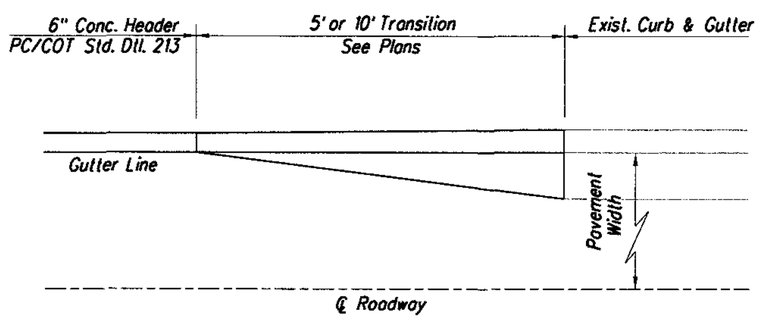

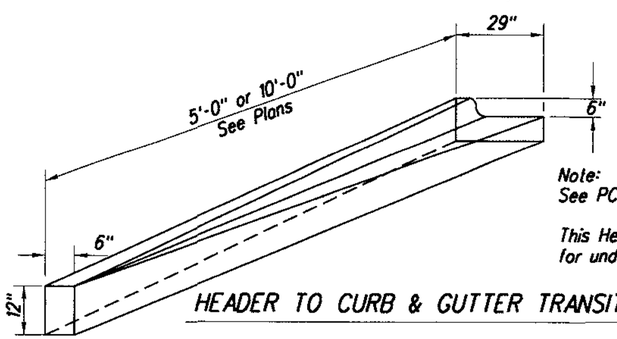

Note:
See PC/COT Std. Dtl. 210 for information not shown

This Header to Curb and Gutter Transition shall be paid for under Bid Item No. 9080051.

HEADER TO CURB & GUTTER TRANSITION

N.T.S.

DETAIL R5

HEADER TO CURB & GUTTER TRANSITION

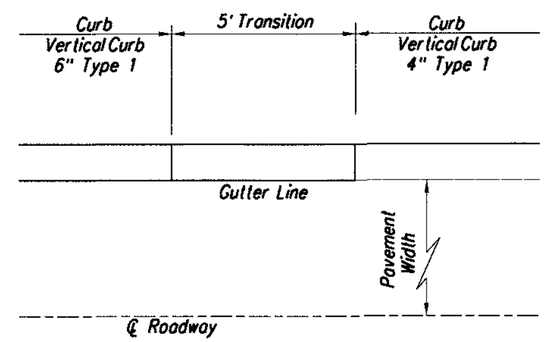

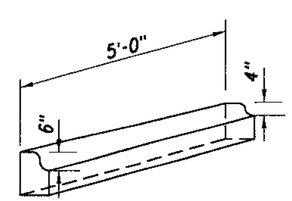

Note:
See PC/COT Std. Dtl. 210 for information not shown

This Curb Transition shall be paid for under Bid Item No. 9080114.

CURB TRANSITION
6" Vertical Curb to 4" Vertical Curb

N.T.S.

DETAIL R6

VERTICAL CURB TRANSITION
6" TYPE 1 TO 4" TYPE 1

Arizona Blue Stake
1-800-STAKE-IT
1-800-782-5348
Call Two Working Days Before You Dig

Pima County Department of Transportation

Priscilla S. Cornelio, P.E., Director

No.	Revision Description	Engineer	Date

		Date
Designed	L. Barela	July/2009
Drawn	A. Young, A. Ledesma	July/2009
Checked	R. Brittain	July/2009
Proj. Engr.	L. Barela	Aug/2009

Expires 03-31-2011

HDR Engineering, Inc.
5210 East Williams Circle, Suite 530
Tucson, AZ 85711-4459
(520) 584-3600

LA CHOLLA BLVD.
RUTHRAUFF RD. TO RIVER RD.
ROADWAY DETAILS
DETAILS R3 TO R6

Scales		Sheet	RD3 of RD33	Page	49 of 356

012145
0000000000059914
Pima_County_Dept_of_Transportation\PCD01-La_Cholla_Blvd-Ruthrauff\13.0D_CAD\Construction_Documents\Civil\17C-03.dgn

08\20\09 4:48:26 PM aledesma

Project • 4LCITR

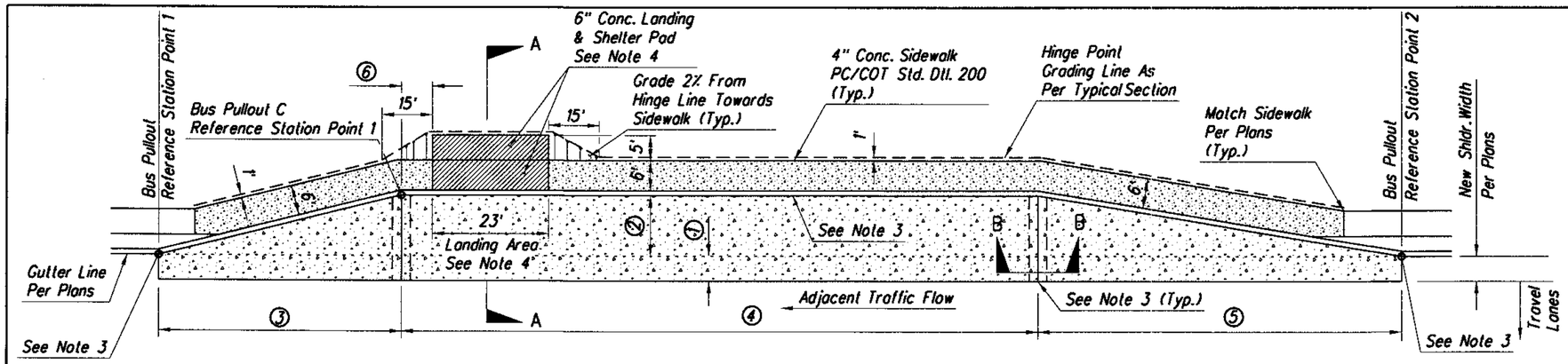

BUS PULLOUT TYPE 1 DETAIL

N.T.S.

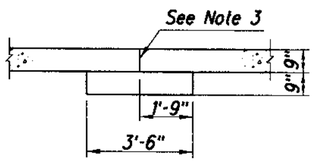

SECTION B-B

NOTES

1. The PCCP surfaces within the bus bay area shall be textured transversly. Surface texturing to conform to the 2008 ADOT Std. Spec. 401.
2. Transverse weakened-plane joints shall be constructed at a maximum spacing of 15' and shall align with joints in the concrete curb.
3. For ½" expansion joint with preformed joint fillers. See Joint Detail this sheet.
4. Concrete Shelter & Landing pad to be poured separately from concrete bus bay pavement. These pads are quantified under Concrete Pad, and will be paid under item #9080301.
5. See Staking Plans for additional grading information. The actual paving pour plan with joint locations shall be based upon the project paving plan submitted by the contractor and approved by the Engineer in accordance with subsection 401-7.01 of the 2008 ADOT Standard Specifications. Joint layout shall follow ADOT Std. C-07.04.
6. Match new road cross slope for Bus Pullouts B & C. Flow line is at face of curb for these two pullouts.
7. Concrete sidewalk quantities do not include driveway apron areas as provided in the Roadway Details.

STREET NAME	BUS PULLOUT	Conc. Sdwlk. (S.F.)	Conc. Pad (S.F.)	PCCP (S.Y.)	TYPE	REFERENCE POINT STATION 1	OFFSET	STATION 2	OFFSET	SIDE ST. STA.	OFFSET	①	②	③	④	⑤	⑥	⑦	⑧	⑨	⑩	COMMENTS
La Cholla Blvd.	A	709	253	326	2	44+95.00	42.10' Lt.	46+68.27	84.83' Lt.	9+15.17	17.6' Rt.	6.00'	12.00'	50.00	99.30'	24.98'	0'	36.06'	6.24'	N/A	25'	See Dtl.R11 & Bus Pullout A Sheet SP3
	B	494	253	336	1	53+20.00	48' Rt.	51+00.00	48' Rt.	N/A	N/A	5.00'	12.00'	35.00'	110.00'	75.00'	15'	N/A	N/A	N/A	N/A	See Bus Pullout B Sheet SP4
	C	521	253	489	1	85+18.00	62.64' Lt.	87+75.00	52' Lt.	N/A	N/A	10.00'	VARIES	N/A	182.00'	75.00'	29'	N/A	N/A	N/A	N/A	See Bus Pullout C Sheet SP6
Ruthruaff Rd.	D	479	253	409	2	97+30.00	46' Lt.	99+40.64	92.76' Lt.	50+92.34	60' Lt.	6.00'	12.00'	50.00'	125.79'	34.86'	70'	34.76'	18.13'	49.25'	35'	See Bus Pullout D Sheet SP7
	E	910	253	511	1	103+83.00	46' Rt.	100+86.00	46' Rt.	N/A	N/A	6.00'	12.00'	50.00'	172.00'	75.00'	75'	N/A	N/A	N/A	N/A	See Bus Pullout E Sheet SP7
	TOTAL	3113	1265	2082																		

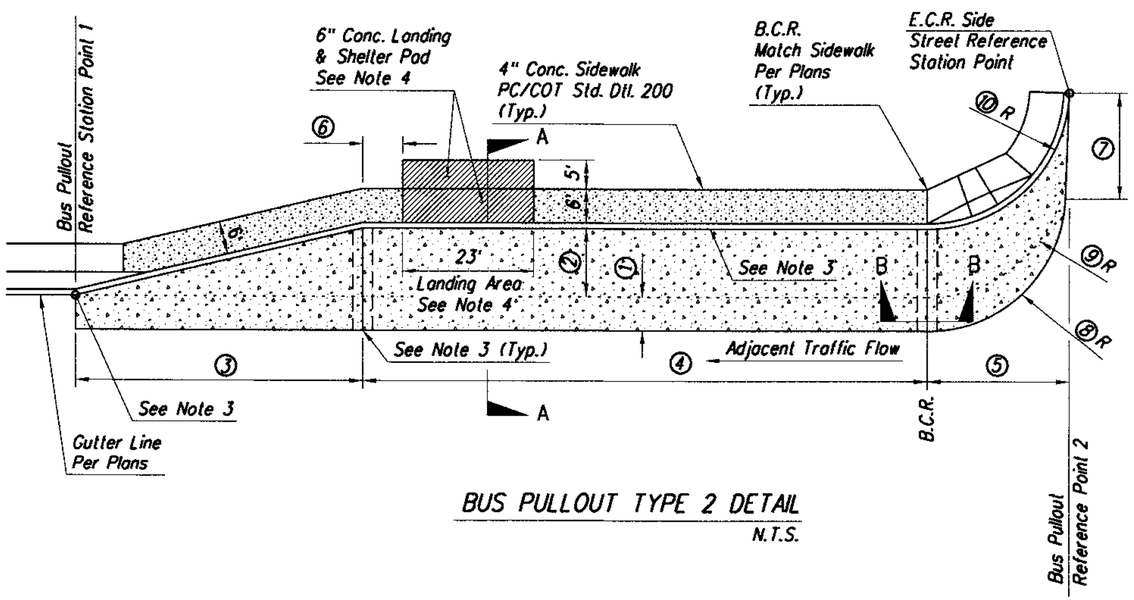

BUS PULLOUT TYPE 2 DETAIL

N.T.S.

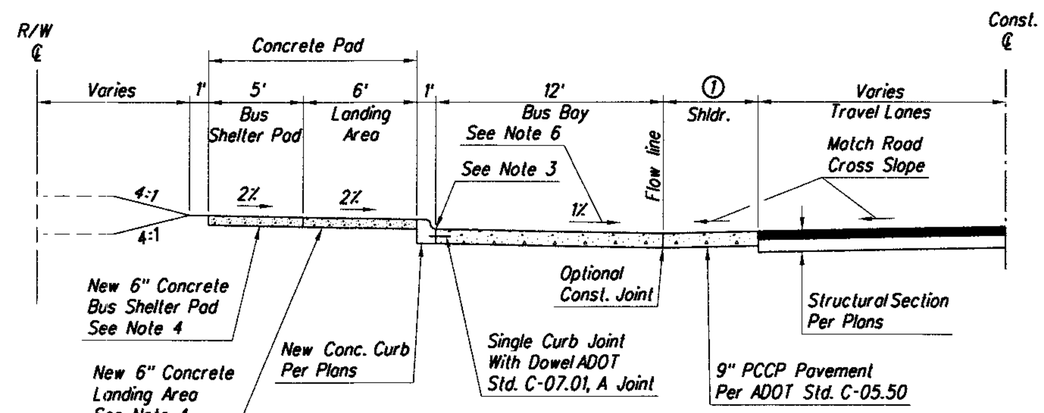

SECTION A-A

N.T.S.

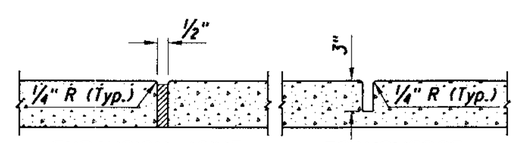

EXPANSION JOINT

TRANSVERSE WEAKENED PLANE JOINT

JOINT DETAIL

DETAIL R7

BUS PULLOUT DETAIL

Arizona Blue Stake
1-800-STAKE-IT
1-800-782-5348
Call Two Working Days Before You Dig

No.	Revision Description	Engineer	Date

		Date
Designed	L. Barela	July 2009
Drawn	A. Young, D. Westenberg	July 2009
Checked	R. Brittain	July 2009
Proj. Engr.	L. Barela	Aug 2009

Priscilla S. Cornelio, P.E., Director

Pima County Department of Transportation

HDR Engineering, Inc. 5210 East Williams Circle, Suite 530 Tucson, AZ 85711-4459 (520) 584-3600

LA CHOLLA BLVD.
RUTHRAUFF RD. TO RIVER RD.
ROADWAY DETAILS
DETAIL R7

Expires 03-31-2011

Scales | Sheet RD4 of RD33 | Page 50 of 356

012145
0000000000055914
Pima_County_Dept_of_Transportation\PCDOT-La_Cholla_Blvd-Ruthrauff\13.00_CAD\Construction_Documents\Civil\17C-04.dgn

08\20\09 4:48:30 PM aledesma

Project # 4LCITR

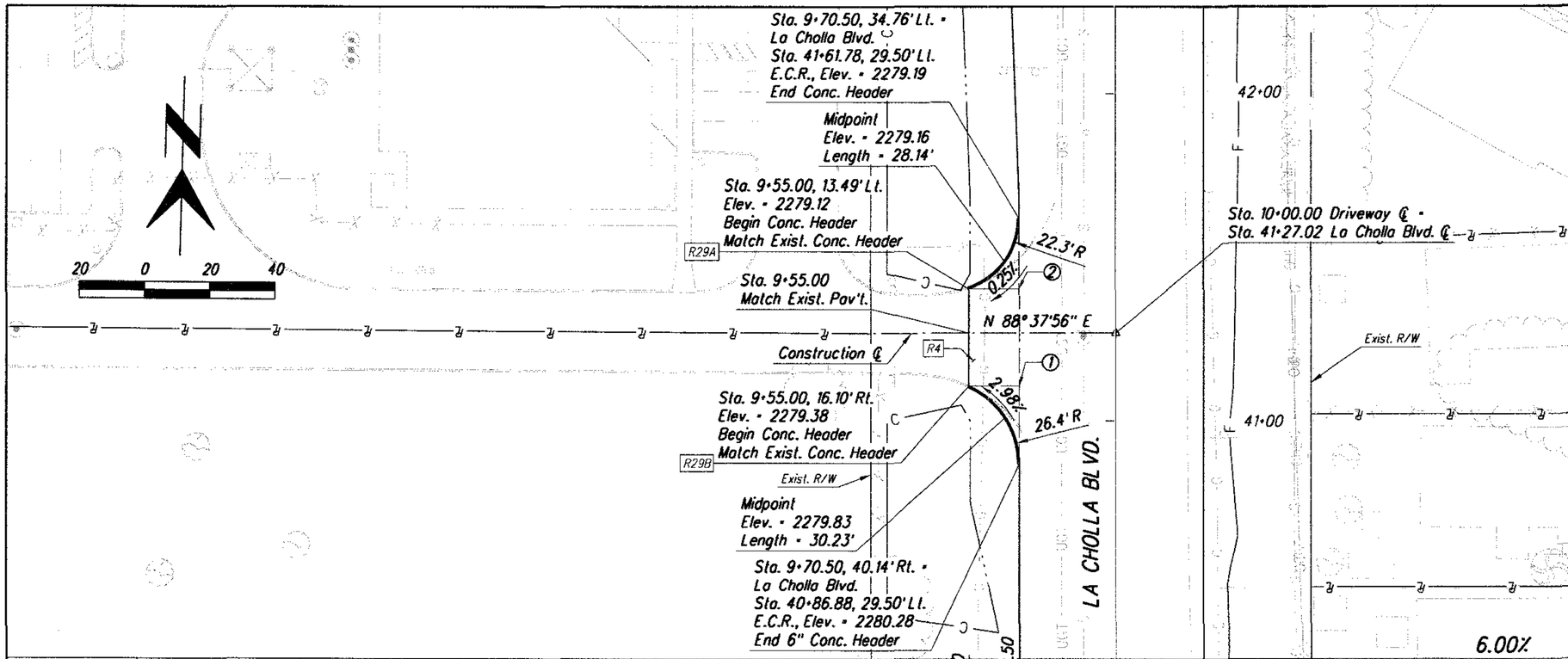

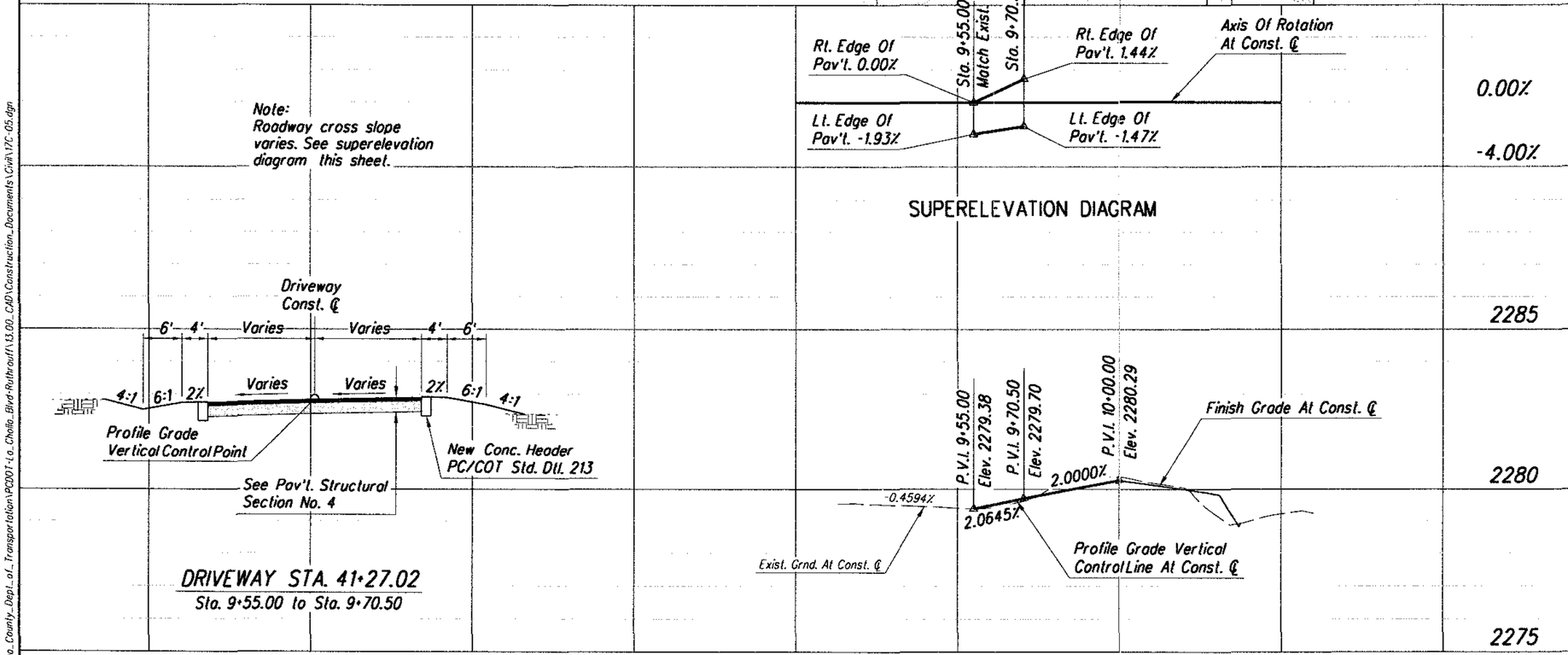

Item No.	Qty.	Unit	Description
R4	72	S.Y.	Pav't. Struct. Sec. No. 4
R29	58	L.F.	Conc. Header PC/COT Std. Dtl. 213
A	28	L.F.	Lt.-Sta. 9+55.00 to 9+70.50 E.C.R.
B	30	L.F.	Rt.-Sta. 9+55.00 to 9+70.50 E.C.R.

Notes:

① Sta. 9+70.50, 16.10' Rt. + La Cholla Blvd.
Sta. 41+10.92, 29.50' Lt., Elev. 2279.93

② Sta. 9+70.50, 13.49' Lt. + La Cholla Blvd.
Sta. 41+40.51, 29.50' Lt., Elev. 2279.50

DETAIL R8

LA CHOLLA BL VD.
DRIVEWAY DETAIL
Sta. 41+27.02

Arizona Blue Stake
1-800-STAKE-IT
1-800-782-5348
Call Two Working Days Before You Dig

Scales	Horiz. 1" = 20' Vert. 1" = 2'	Sheet	RD5 of RD33	Page	51 of 356

Pima County Department of Transportation

Priscilla S. Cornelio, P.E., Director

No.	Revision Description	Engineer	Date

		Date
Designed	L. Barela	July/2009
Drawn	A. Young, D. Wasserberg	July/2009
Checked	R. Brittain	July/2009
Proj. Engr.	L. Barela	Aug/2009

Registered Professional Engineer (Civil) CERTIFICATE NO. 37257 L.C. BARELA Date Signed 8-14-09 ARIZONA, U.S.A.
Expires 03-31-2011

HDR Engineering, Inc.
5210 East Williams Circle, Suite 530
Tucson, AZ 85711-4459
(520) 584-3500

LA CHOLLA BL VD.
RUTHRAUFF RD. TO RIVER RD.
ROADWAY DETAILS
DETAIL R8

012145
0000000000059914
Pima_County_Dept_of_Transportation\PCD01-La_Cholla_Blvd-Ruthrauff\13.00_CAD\Construction_Documents\Civil\17C-05.dgn

08\20\09 4:48:38 PM aledesma

Project = 4LCITR

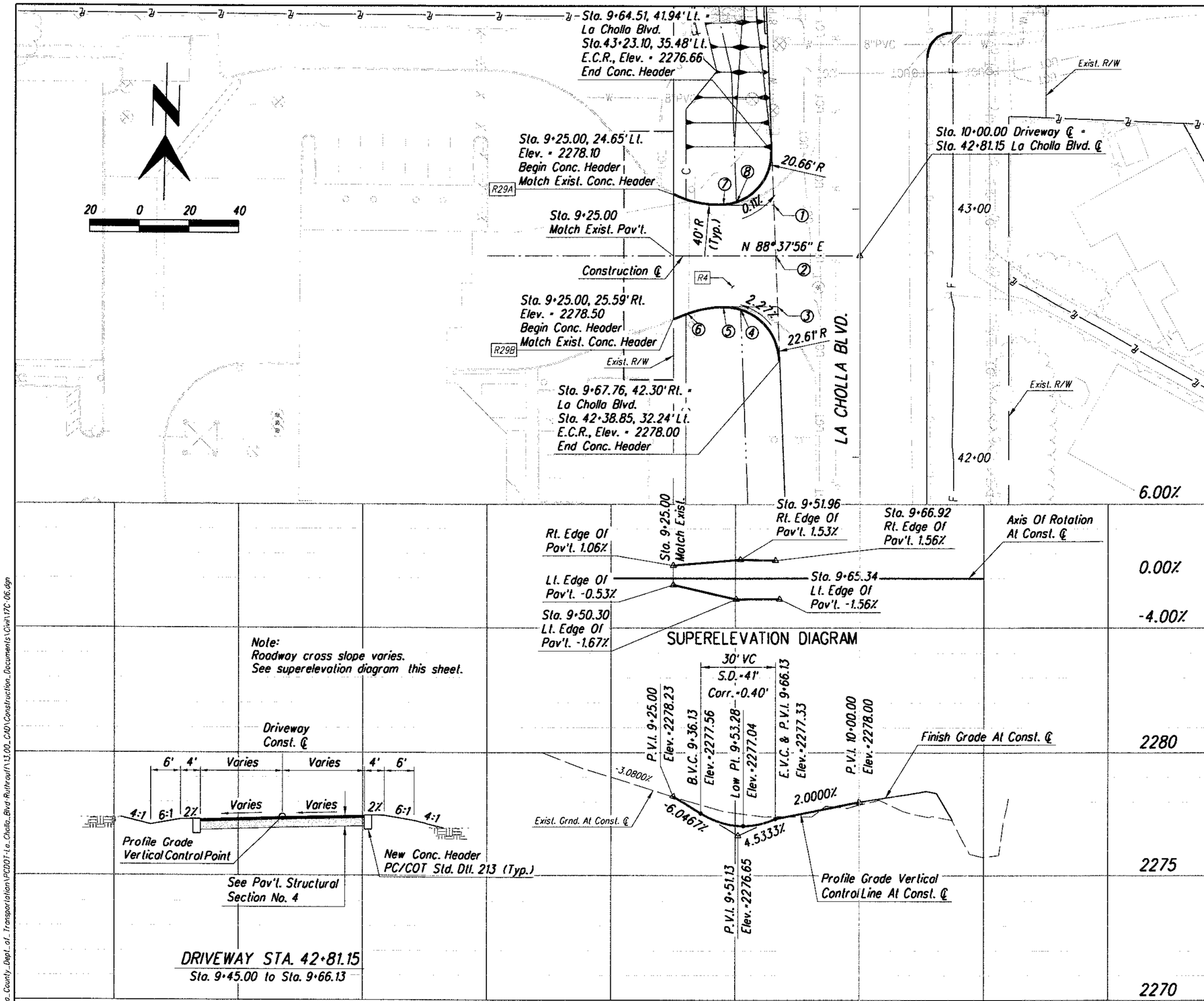

Item No.	Qty.	Unit	Description
R4	216	S.Y.	Pav't. Struct. Sec. No. 4
R29	109	L.F.	Conc. Header PC/COT Std. Dtl. 213
A	53	L.F.	Lt.-Sta. 9+25.00 to 9+64.51 E.C.R.
B	56	L.F.	Rt.-Sta. 9+25.00 to 9+67.76 E.C.R.

Notes:

1. Sta. 9+65.34, 20.52' Lt. = La Cholla Blvd. Sta. 43+01.67, 34.66' Lt., Elev. 2277.01
2. Sta. 9+66.13 = La Cholla Blvd. Sta. 42+81.15, 33.87' Lt., Elev. 2277.32
3. Sta. 9+66.92, 20.56' Rt. = La Cholla Blvd. Sta. 42+60.59, 33.07' Lt., Elev. 2277.65
4. Sta. 9+51.96, 21.61' Rt., Elev. = 2277.37
5. Sta. 9+45.00, 20.56' Rt., P.C.C.R., Elev. = 2277.45
6. Sta. 9+30.46, 23.41' Rt., B.C.R., Elev. = 2278.17
7. Sta. 9+45.00, 20.52' Lt., P.C.C.R., Elev. = 2276.87
8. Sta. 9+50.30, 21.51' Lt., Elev. = 2276.69

DETAIL R9

LA CHOLLA BLVD.
DRIVEWAY DETAIL
Sta. 42+81.15

Arizona Blue Stake
1-800-STAKE-IT
1-800-782-5348
Call Two Working Days Before You Dig

Scales	Horiz. 1" = 20' Vert. 1" = 2'	Sheet	RD6 of RD33	Page	52 of 356

Pima County Department of Transportation
Priscilla S. Cornelio, P.E., Director

No.	Revision Description	Engineer	Date

		Date
Designed	L. Barela	July 2009
Drawn	A. Young, D. Wostenberg	July 2009
Checked	R. Britton	July 2009
Proj. Engr.	L. Barela	Aug 2009

Registered Professional Engineer (Civil) CERTIFICATE NO. 37267 L.E. BARELA Date Signed Arizona, U.S.A.
Expires 03-31-2011

HDR Engineering, Inc.
5210 East Williams Circle, Suite 530
Tucson, AZ 85711-4459
(520) 584-3600

LA CHOLLA BLVD.
RUTHRAUFF RD. TO RIVER RD.
ROADWAY DETAILS
DETAIL R9

012145
0000000000059914
Pima_County_Dept._of_Transportation\PCDOT-La_Cholla_Blvd-Ruthrauff\13.00_CAD\Construction_Documents\Civil\17C-06.dgn
08\20\09 4:48:43 PM dledesma
Project = 4LCITR

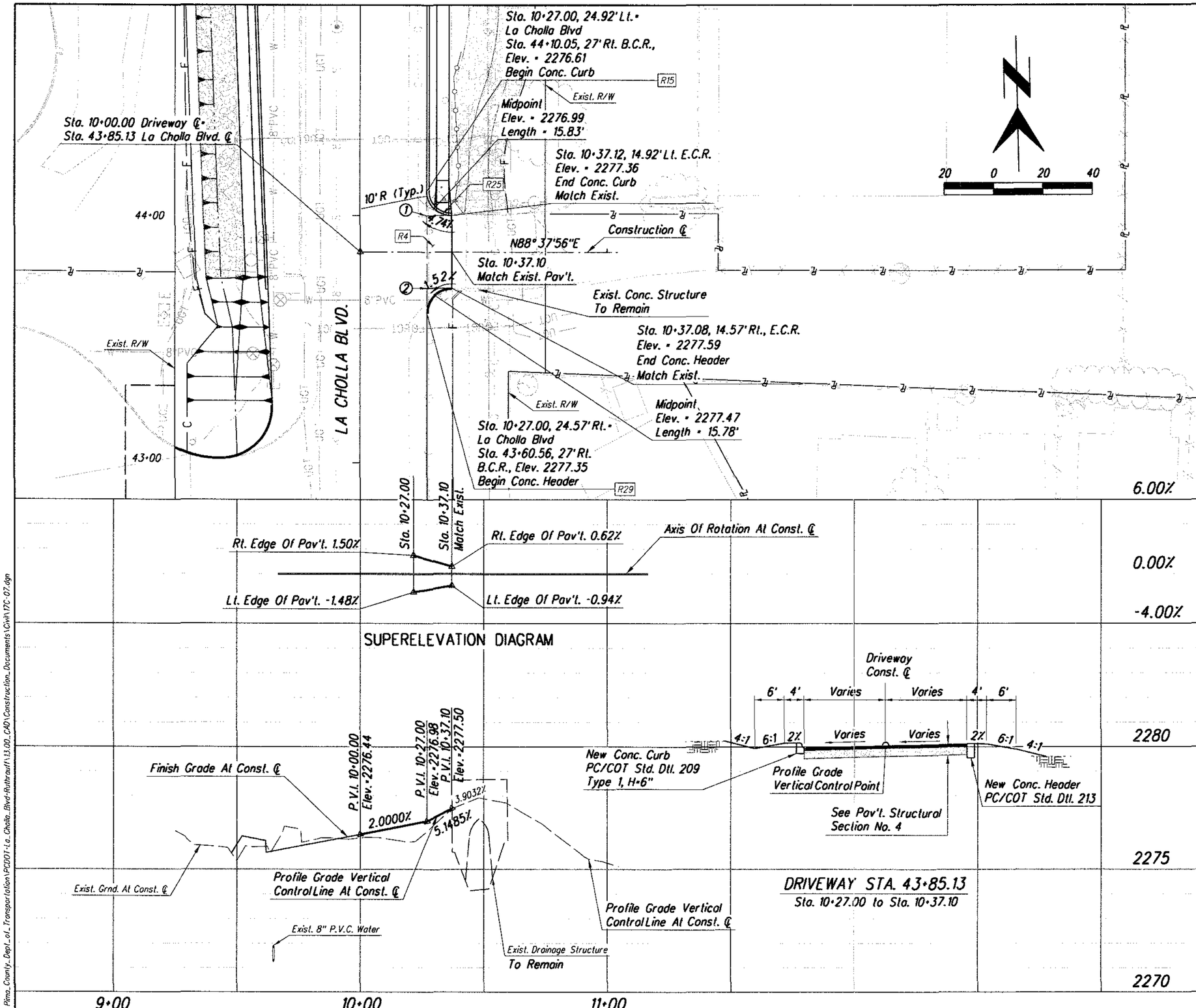

Item No.	Qty.	Unit	Description
R4	38	S.Y.	Pav't. Struct. Sec. No. 4
R15	16	L.F.	Lt.-Sta. 10+27.00 B.C.R. to 10+37.10 E.C.R. Except at Curb Access Ramp, Conc. Curb PC/COT Std. Dtl. 209, Type 1, H=6"
R25	1	Each	Sta. 10+33.37, 6' Lt. Conc. Curb Access Ramp See Detail R35, Type 3, No Detectable Warning Strip
R29	16	L.F.	Rt.-Sta. 10+27.00 B.C.R. to 10+37.10 E.C.R., Conc. Header PC/COT Std. Dtl. 213

Notes:

1. Sta. 10+27.00, 14.92' Lt. = La Cholla Blvd. Sta. 44+00.05, 27.00' Rt., Elev. 2276.76
2. Sta. 10+27.00, 14.57' Rt. = La Cholla Blvd. Sta. 43+70.56, 27.00' Rt., Elev. 2277.20

DETAIL R10

LA CHOLLA BLVD.
DRIVEWAY DETAIL
Sta 43+85.13

Arizona Blue Stake
1-800-STAKE-IT
1-800-782-5348
Call Two Working Days Before You Dig

Scales	Horiz. 1" = 20' Verl. 1" = 2'	Sheet	RD7 of RD33	Page	53 of 356

Pima County Department of Transportation
Priscilla S. Cornelio, P.E., Director

No.	Revision Description	Engineer	Date

		Date
Designed	L. Barela	July/2009
Drawn	A. Young, D. Westenberg	July/2009
Checked	R. Britton	July/2009
Proj. Engr.	L. Barela	Aug/2009

Registered Professional Engineer (Civil) Certificate No. 37267 LUIS BARELA Date Signed 8-21-09 Arizona, U.S.A.
Expires 03-31-2011

HDR Engineering, Inc.
3210 East Williams Circle, Suite 530
Tucson, AZ 85711-4459
(520) 584-3600

LA CHOLLA BLVD.
RUTHRAUFF RD. TO RIVER RD.
ROADWAY DETAILS
DETAIL R10

012145
0000000000059914
Pima_County_Dept_of_Transportation\PCDOT-La_Cholla_Blvd-Ruthrauff\13.00_CAD\Construction_Documents\Civil\17C-07.dgn

08\20\09 4:48:48 PM aledesma

Project • 4LCITR

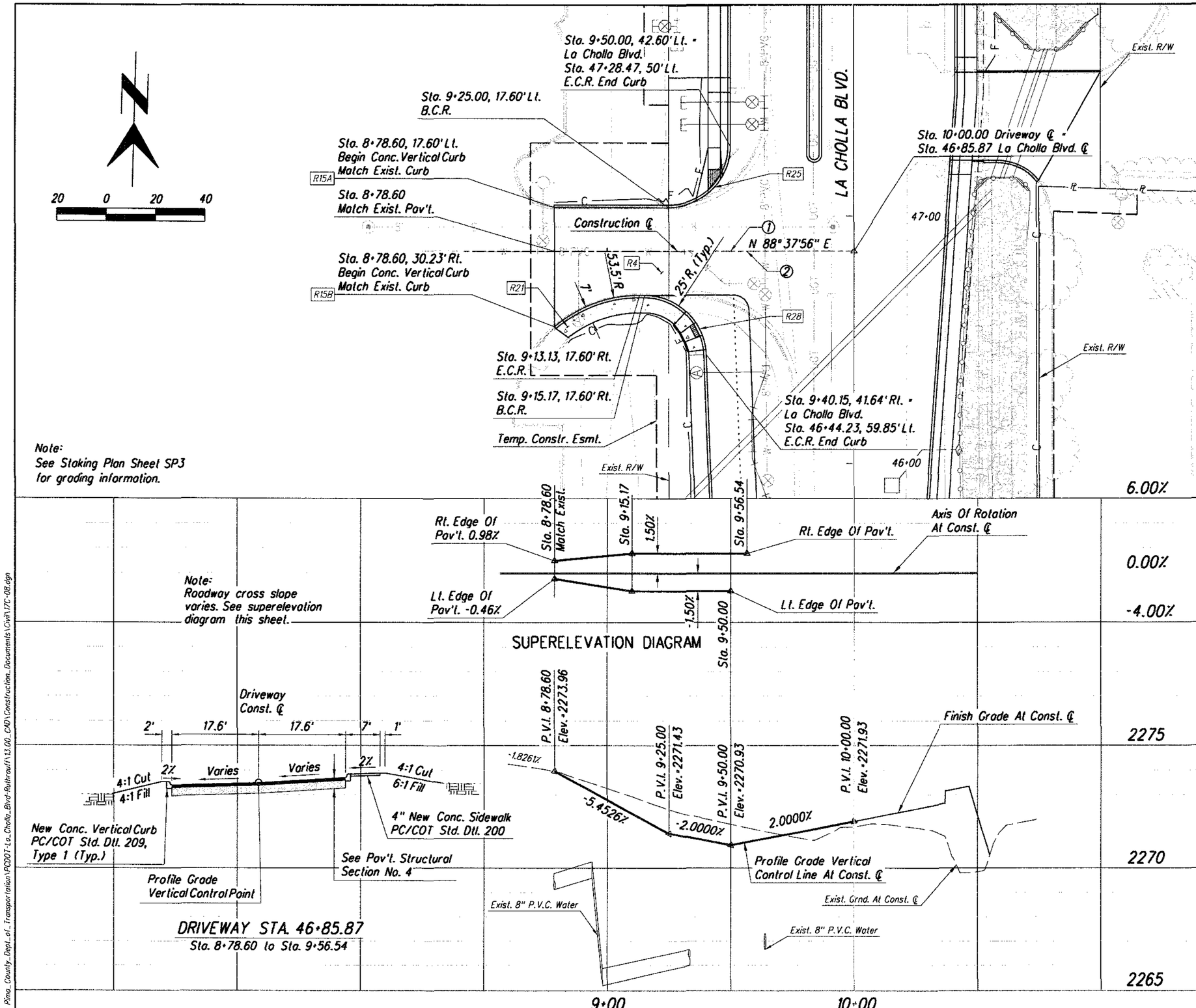

Item No.	Qty.	Unit	Description
R4	324	S.Y.	Pav't. Struct. Sec. No. 4
R15	165	L.F.	Conc. Curb PC/COT Std. Dtl. 209 Type 1, H=6"
A	87	L.F.	Lt.-Sta. 8+78.60 to 9+50.00 E.C.R.
B	78	L.F.	Rt.-Sta. 8+78.60 B.C.R. to 9+40.15 E.C.R.
R21	319	S.F.	Rt. Sta. 8+78.60 to 9+40.15 E.C.R., 5' Conc. Sdwlk. PC/COT Std. Dtl. 200, 4" Thick Except At Curb Access Ramp
R25	1	Each	Sta. 9+43.50, 25.78' Lt. Conc. Curb Access Ramp See Detail R35, Type 3
R28	1	Each	Sta. 9+36.50, 31.60' Rt. Conc. Curb Access Ramp See Detail R35, Type 1

Notes:
1. Sta. 9+50.00
2. Sta. 9+56.54

DETAIL R11

LA CHOLLA BL VD.
DRIVEWAY DETAIL
Sta. 46+85.87

Arizona Blue Stake
1-800-STAKE-IT
1-800-782-5348
Call Two Working Days Before You Dig

Scales	Horiz. 1" = 20' Vert. 1" = 2'	Sheet	RD8 of RD33	Page	54 of 356

Pima County Department of Transportation
Priscilla S. Cornelio, P.E., Director

No.	Revision Description	Engineer	Date

		Date
Designed	L. Barela	July/2009
Drawn	A. Young, D. Westenberg	July/2009
Checked	R. Britton	July/2009
Proj. Engr.	L. Barela	Aug/2009

Registered Professional Engineer (Civil) CERTIFICATE NO. 37267 LUIS BARELA ARIZONA, U.S.A.
Expires 03-31-2011

HDR Engineering, Inc.
5210 East Williams Circle, Suite 530
Tucson, AZ 85711-4459
(520) 584-3600

LA CHOLLA BL VD.
RUTHRAUFF RD. TO RIVER RD.
ROADWAY DETAILS
DETAIL R11

012145
G000600000059914
Pima_County_Dept_of_Transportation\PCDOT_La_Cholla_Blvd-Ruthrauff\13.00_CAD\Construction_Documents\Civil\17C-08.dgn

08\20\09 4:48:53 PM aledesmo

Project = 4LCITR

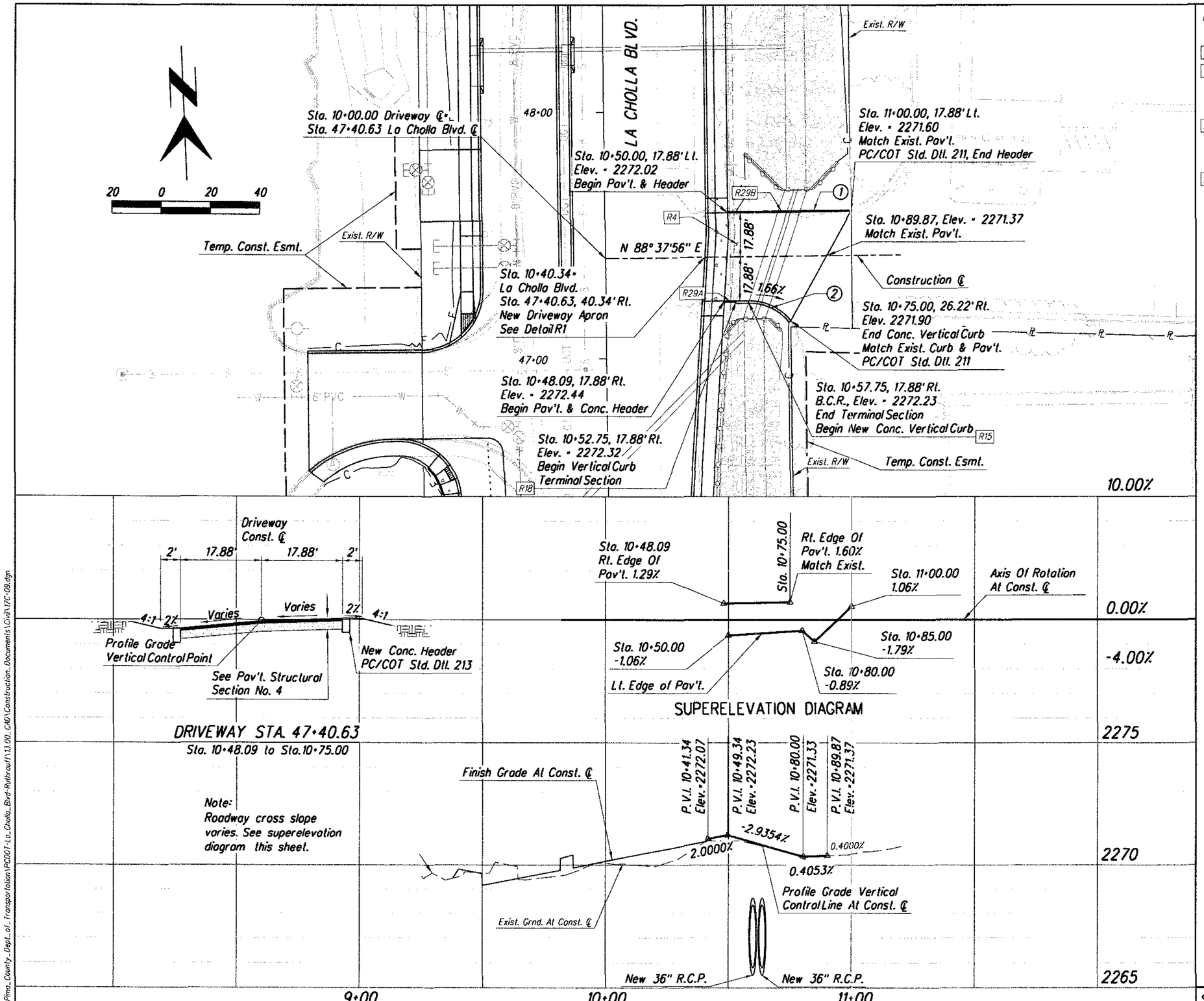

Item No.	Qty.	Unit	Description
R4	169	S.Y.	Pav't. Struct. Sec. No. 4
R15	20	L.F.	Rt.-Sta. 10+57.75 B.C.R. to 10+75.00 Conc. Curb PC/COT Std. Dtl. 209 Type 1, H=6"
R18	1	Each	Rt - Sta. 10+52.75 to Sta. 10+57.75 BCR 5' Conc. Curb Terminal Section See PC/COT Std. Dtl. 212
R29	55	L.F.	Conc. Header PC/COT Std. Dtl. 213
A	5	L.F.	Rt.-Sta. 10+48.09 to 10+52.75
B	50	L.F.	Lt.-Sta. 10+50.00 to 11+00.00

Notes:

1. Sta. 10+85.00, 17.88' Lt. Elev. = 2271.03
2. Midpoint Elev. = 2272.06, R = 22', Length = 19.83'

DETAIL R12

LA CHOLLA BLVD.
DRIVEWAY DETAIL
STA. 47+40.63

Arizona Blue Stake
1-800-STAKE-IT
1-800-782-5348
Call Two Working Days Before You Dig

Priscilla S. Cornelio, P.E., Director

Pima County Department of Transportation

No.	Revision Description	Engineer	Date

		Date
Designed	L. Barela	July/2009
Drawn	D. Wostenberg	July/2009
Checked	R. Britton	July/2009
Proj. Engr.	L. Barela	Aug/2009

Registered Professional Engineer (Civil) CERTIFICATE NO. 37267 LUIS A. BARELA Date Signed 2-2-09 ARIZONA, U.S.A.
Expires 03-31-2011

HDR Engineering, Inc.
5210 East Williams Circle, Suite 530
Tucson, AZ 85711-4459
(520) 584-3600

LA CHOLLA BLVD.
RUTHRAUFF RD. TO RIVER RD.
ROADWAY DETAILS
DETAIL R12

Scales: Horiz. 1" = 20' Vert. 1" = 2' | Sheet RD9 of RD33 | Page 55 of 356

Project = 4LCITR

08\20\09 4:48:59 PM oledesma

012145
0000000000059914
Pima_County_Dept_of_Transportation\PCDOT-La_Cholla_Blvd-Ruthrauff\13.00_CAD\Construction_Documents\Civil\17C-09.dgn

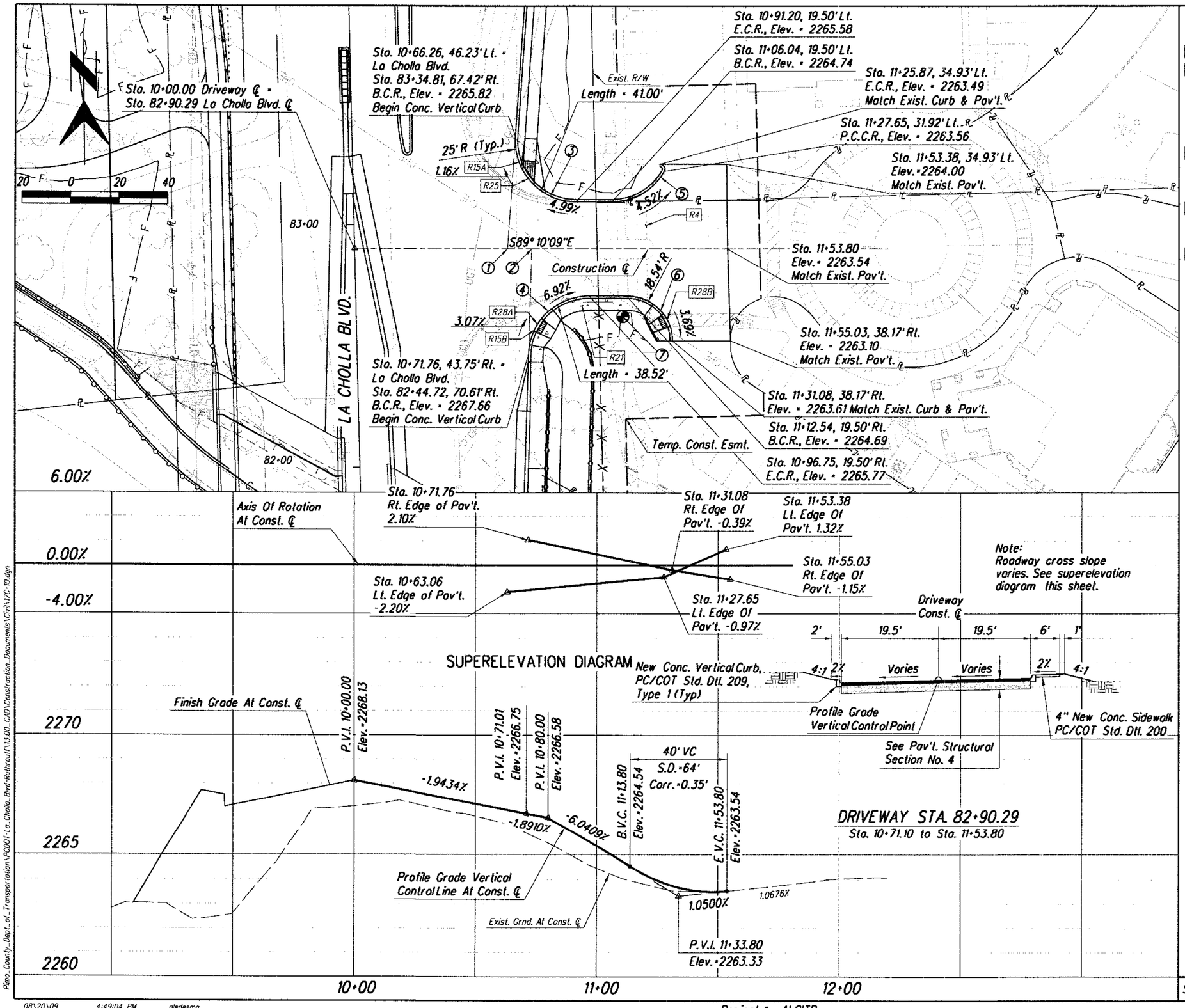

Item No.	Qty.	Unit	Description
R4	513	S.Y.	Pav't. Struct. Sec. No. 4
R15	170	L.F.	Conc. Curb PC/COT Std. Dtl. 209 Type 1, H=6"
A	86	L.F.	Lt.-Sta. 10+66.26 B.C.R. to 11+25.87 E.C.R.
B	84	L.F.	Rt.-Sta. 10+71.76 B.C.R. to 11+31.08
R21	229	S.F.	Rt.-Sta. 10+71.76 B.C.R. to Sta. 11+22.55', 5' Conc. Sdwlk. PC/COT Std. Dtl. 200, 4" Thick Except Curb Access Ramp
R25	1	Each	Sta. 10+71.59, 29.01' Lt. Conc. Curb Access Ramp See Detail R35, Type 3
R28	2	Each	Conc. Curb Access Ramp See Detail R35, Type 1
A	1	Each	Sta. 10+75.40, 31.49' Rt. No Back Ramp Curb
B	1	Each	Rt.-Sta. 11+29.00, 29.51' Rt.

Notes:

1. Sta. 10+63.06 = La Cholla Blvd. Sta. 82+88.68, 63.04' Rt., Elev. = 2266.91
2. Sta. 10+73.06 = La Cholla Blvd. Sta. 82+88.42, 73.04' Rt., Elev. = 2266.71
3. Sta. 10+80.00, 22.15' Lt., Elev. = 2266.16
4. Sta. 10+80.00, 25.94' Rt., Elev. = 2267.04
5. Midpoint, Elev. = 2264.15, Length = 26.09'
6. Midpoint, Elev. = 2264.15 Length = 29.26
7. Const. BM #7

DETAIL R13

LA CHOLLA BLVD.
DRIVEWAY DETAIL
Sta. 82+90.29

Arizona Blue Stake
1-800-STAKE-IT
1-800-782-5348
Call Two Working Days Before You Dig

No.	Revision Description	Engineer	Date

		Date
Designed	L. Bareto	July/2009
Drawn	A. Young, D. Wolstenberg	July/2009
Checked	R. Britton	July/2009
Proj. Engr.	L. Bareto	Aug/2009

Priscilla S. Cornelio, P.E., Director

Pima County Department of Transportation

LA CHOLLA BLVD.
RUTHRAUFF RD. TO RIVER RD.
ROADWAY DETAILS
DETAIL R13

HDR Engineering, Inc.
5210 East Williams Circle, Suite 530
Tucson, AZ 85711-4459
(520) 584-3600

Expires 03-31-2011

Scales	Horiz. 1" = 20' Vert. 1" = 2'	Sheet	RD10 of RD33	Page	56 of 356

012145
0000000000059914
Pima_County_Dept_of_Transportation\PCDOT-La_Cholla_Blvd-Ruthrauff\13.00_CAD\Construction_Documents\Civil\17C-10.dgn

08\20\09 4:49:04 PM aledesma

Project = 4LCITR

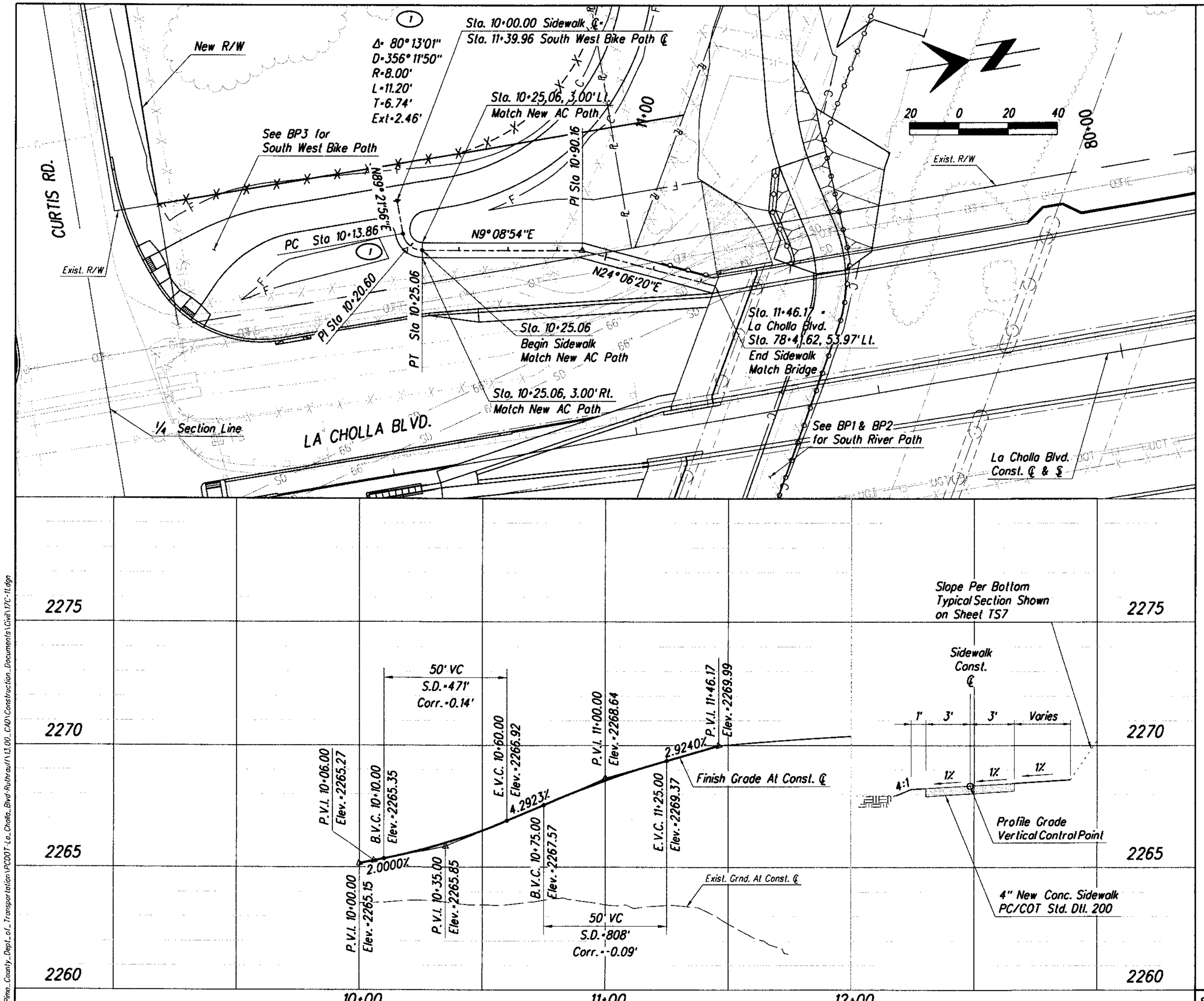

DETAIL R14

LA CHOLLA BLVD.
SIDEWALK DETAIL
SOUTHWEST CORNER
OF BRIDGE

Arizona Blue Stake
1-800-STAKE-IT
1-800-782-5348
Call Two Working Days Before You Dig

Scales	Horiz. 1"=20' Vert. 1"=2'	Sheet	RD11 of RD33	Page	57 of 356

Project # 4LCITR

Pima County Department of Transportation

LA CHOLLA BLVD.
RUTHRAUFF RD. TO RIVER RD.
SIDEWALK DETAIL
DETAIL R14

HDR Engineering, Inc.
5210 East Williams Circle, Suite 530
Tucson, AZ 85711-4459
(520) 584-3600

Expires 03-31-2011

Designed	L. Borelo/J. Bennett	July/2009
Drawn	J. Soto	July/2009
Checked	R. Britain	July/2009
Proj. Engr.	L. Borela	Aug/2009

No.	Revision Description	Engineer	Date

Priscilla S. Cornelio, P.E., Director

012145
0000000005914
Pima_County_Dept_of_Transportation\PCDOT-La_Cholla_Blvd-Ruthrauff\13.00_CAD\Construction_Documents\Civil\17C-11.dgn

08\20\09 4:49:10 PM oledesma

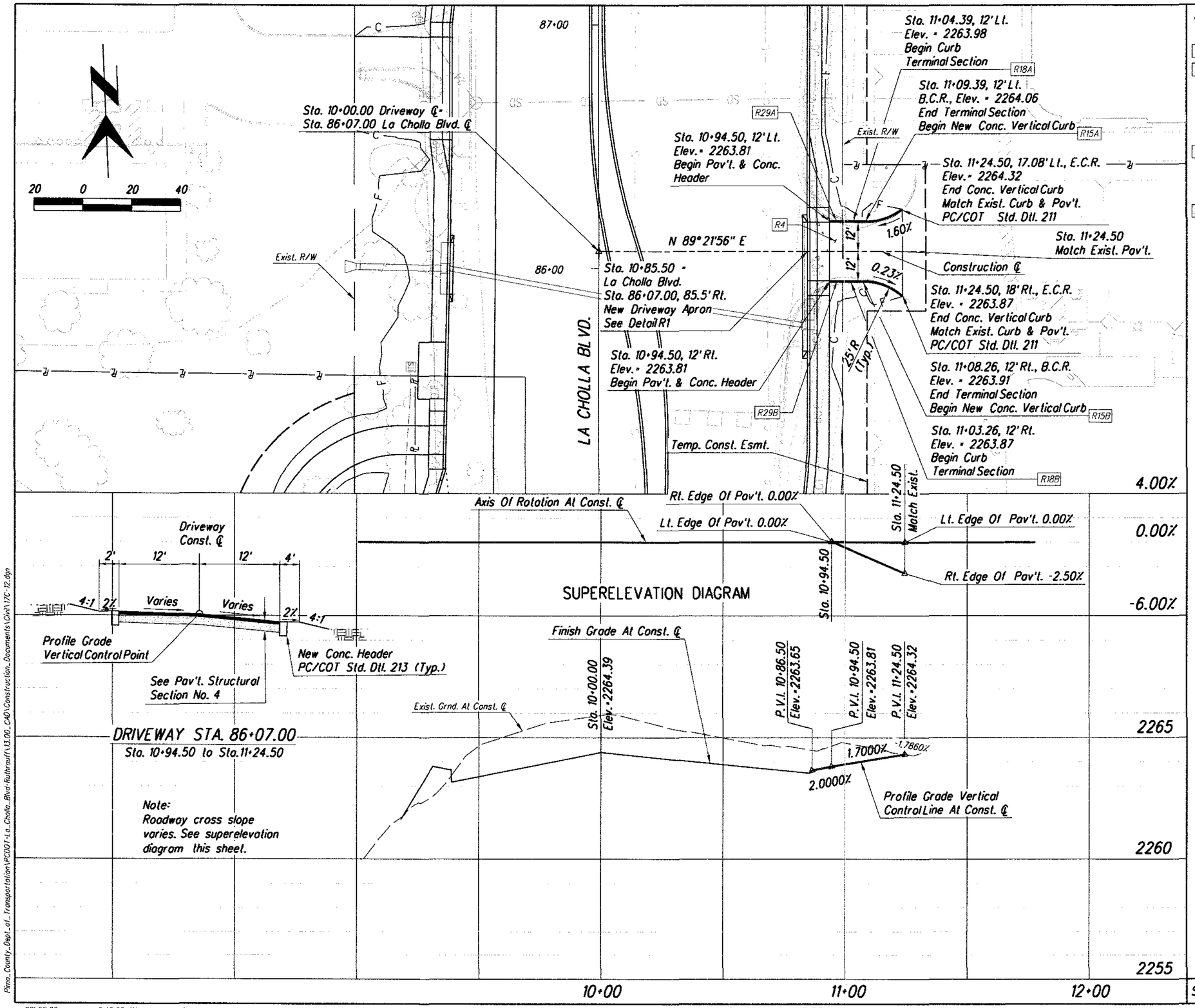

Item No.	Qty.	Unit	Description
R4	86	S.Y.	Pav't. Struct. Sec. No. 4
R15	34	L.F.	Conc. Curb PC/COT Std. Dtl. 209 Type 1, H=6"
A	16	L.F.	Lt.-Sta. 11+09.39 B.C.R. to 11+24.50 E.C.R.
B	18	L.F.	Rt.-Sta. 11+08.26 B.C.R. to 11+24.50 E.C.R.
R18	2	Each	5' Conc. Curb Terminal Section See PC/COT Std. Dtl. 212
A	1	Each	Sta. 11+04.39, 12' Lt.
B	1	Each	Sta. 11+03.26, 12' Rt.
R29	19	L.F.	Conc. Header See PC/COT Std. Dtl. 213
A	10	L.F.	Lt.-Sta. 10+94.50 to 11+04.39
B	9	L.F.	Rt.-Sta. 10+94.50 to 11+03.26

DETAIL R15

LA CHOLLA BLVD.
DRIVEWAY DETAIL
STA. 86+07.00

Arizona Blue Stake
1-800-STAKE-IT
1-800-782-5348
Call Two Working Days Before You Dig

Scales: Horiz. 1" = 20' Vert. 1" = 2'

Sheet RD12 of RD33 | Page 58 of 356

Pima County Department of Transportation
Priscilla S. Cornelio, P.E., Director

No.	Revision Description	Engineer	Date

		Date
Designed	L. Barela	July/2009
Drawn	S. Tucker, A. Young Jr.	July/2009
Checked	R. Brittain	July/2009
Proj. Engr.	L. Barela	Aug/2009

Registered Professional Engineer (Civil) CERTIFICATE NO. 37267 LUIS BARELA Date Signed 8/21/09 ARIZONA, U.S.A.
Expires 03-31-2011

HDR Engineering, Inc.
5210 East Williams Circle, Suite 530
Tucson, AZ 85711-4459
(520) 584-3600

LA CHOLLA BLVD.
RUTHRAUFF RD. TO RIVER RD.
ROADWAY DETAILS
DETAIL R15

012145
0000000000059914
Pima_County_Dept_of_Transportation\PC001-La_Cholla_Blvd-Ruthrauff\13.00_CAD\Construction_Documents\Cha\17C-12.dgn
08\21\09 9:45:36 AM aledesma

Project • 4LCITR

NOTE:
See Detail R1, Sheet RD1
For Concrete Driveway
Quantities And Information.

20 0 20 40

Sta. 9+31.00, 18' Lt.
Elev. = 2263.72
End Pav't.

Sta. 9+00.00, 18.20' Lt.
Elev. = 2263.69
Match Exist. Pav't.

Construction ℄

R4

Sta. 9+00.00
Match Exist. Pav't.

Sta. 9+00.00, 17.60' Rt.
Elev. = 2263.69
Match Exist. Pav't.

Sta. 9+31.00, 18' Rt.
Elev. = 2263.56
End Pav't.

Exist. R/W

Sta. 9+40.00 =
La Cholla Blvd.
Sta. 86+77.00, 60' Lt.
New Driveway Apron
See Detail R1

N 89° 21'56" E

LA CHOLLA BLVD.

Sta. 10+00.00 Driveway ℄ =
Sta. 86+77.00 La Cholla Blvd. ℄

Temp. Const. Esmt.

87+00

86+00

Exist. R/W

6.00%

Public R/W Esmt.

Axis Of Rotation
At Const. ℄

Sta. 9+00
Match Exist.

Sta. 9+31

Lt. Edge Of Pav't. 0.50%

Rt. & Lt. Edge Of Pav't. 0.00%

Rt. Edge Of Pav't. -0.39%

Driveway
Const.
℄

Varies Varies

0.00%

-4.00%

Note:

See Detail R1 for concrete
driveway quantities and information
not shown.

SUPERELEVATION DIAGRAM

4:1 Varies Varies 4:1

Profile Grade
Vertical Control Point

See Pav't. Structural
Section No. 4

2270

P.V.I. 9+00.00
Elev. = 2263.69

P.V.I. 9+31.00
Elev. = 2263.63

P.V.I. 9+39.00
Elev. = 2263.47

Sta. 10+00.00
Elev. = 2264.56

Finish Grade At Const. ℄

2265

Exist. Grnd. At Const. ℄

0.8805%

-0.1935%

-2.0000%

Profile Grade Vertical
Control Line At Const. ℄

2260

9+00

10+00

Item No.	Qty.	Unit	Description
R4	124	S.Y.	Pav't. Struct. Sec. No. 4

DETAIL R16

LA CHOLLA BLVD.
DRIVEWAY DETAIL
STA. 86+77.00

Arizona Blue Stake
1-800-STAKE-IT
1-800-782-5348
Call two Working Days Before You Dig

Scales Horiz. 1" = 20' Vert. 1" = 2' | Sheet RD13 of RD33 | Page 59 of 356

Project = 4LCITR

Pima County Department of Transportation

Priscilla S. Cornelio, P.E., Director

No.	Revision Description	Engineer	Date

		Date
Designed	L. Barela	July/2009
Drawn	S. Tucker, A. Young	July/2009
Checked	R. Britton	July/2009
Proj. Engr.	L. Barela	Aug/2009

Registered Professional Engineer (Civil) CERTIFICATE NO. 37267 L. BARELA Date Signed 7-23-09 ARIZONA, U.S.A.

Expires 03-31-2011

HDR Engineering, Inc.
5210 East Williams Circle, Suite 530
Tucson, AZ 85711-4459
(520) 584-3600

LA CHOLLA BLVD.
RUTHRAUFF RD. TO RIVER RD.
ROADWAY DETAILS
DETAIL R16

012145
0000000000059914
Pima_County_Dept_of_Transportation\PCDOT-La_Cholla_Blvd-Ruthrauff\13.00_CAD\Construction_Documents\Civil\17C-13.dgn

08\20\09 4:49:20 PM oledesma

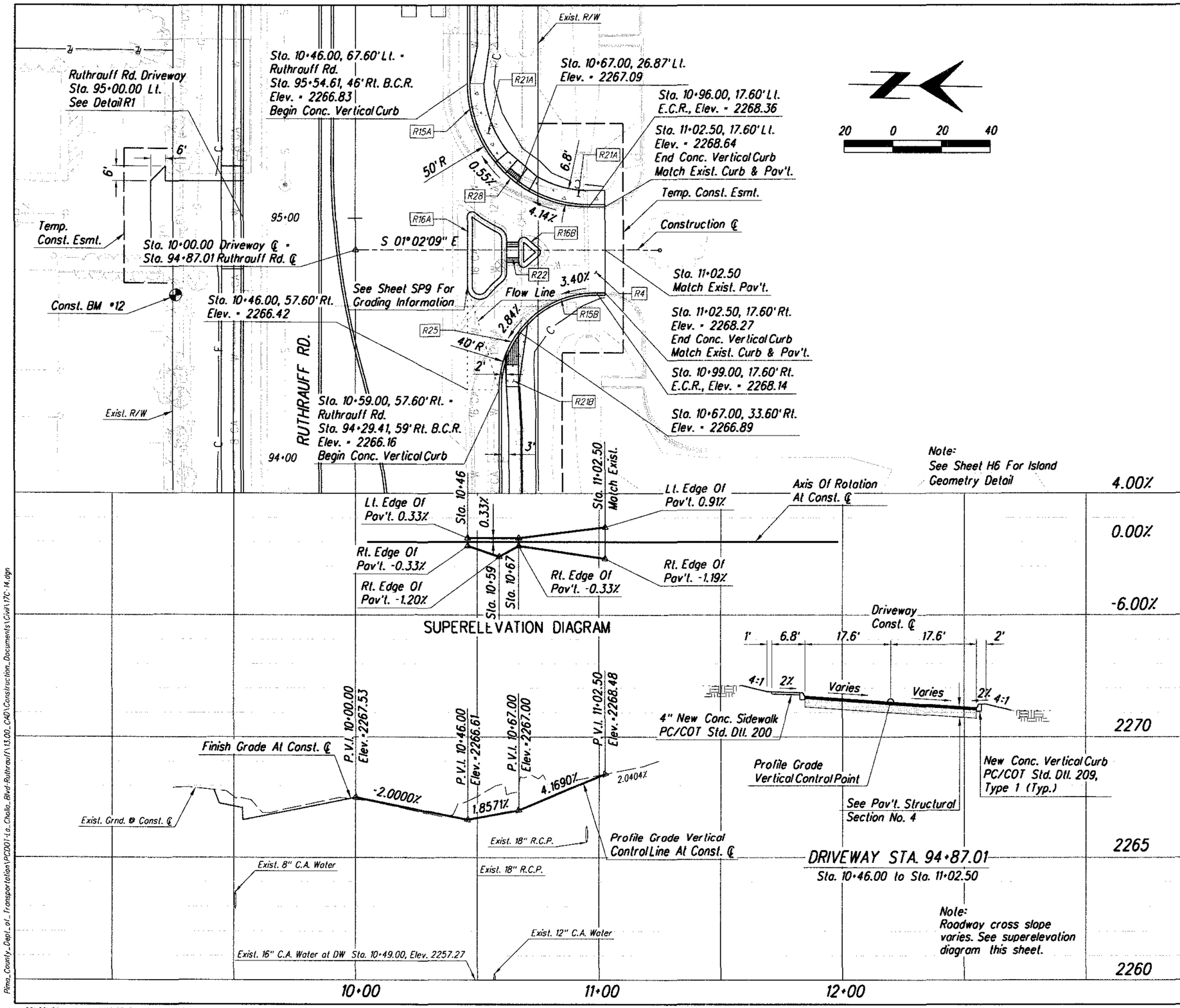

Item No.	Qty.	Unit	Description
R4	255	S.Y.	Pav't. Struct. Sec. No. 4
R15	151	L.F.	Conc. Curb PC/COT Std. Dtl. 209 Type 1, H=6"
A	85	L.F.	Lt.-Sta. 10+46.00 B.C.R. to 11+02.50
B	66	L.F.	Rt.-Sta. 10+59.00 B.C.R. to 11+02.50
R16	132	L.F.	Conc. Wedge Curb PC/COT Std. Dtl. 209
A	89	L.F.	Sta. 10+49.23, Lt. to Sta. 10+62.00, Lt. to Sta. 10+62.00, Rt. to Sta. 10+54.89, Rt. to Sta. 10+46.00, Lt.
B	43	L.F.	Sta. 10+67.00, Lt. to Sta. 10+75.23, Lt. to Sta. 10+67.00, Rt.
R21	406	S.F.	5' Conc. Sdwlk. PC/COT Std. Dtl. 200, 4" Thick Except At Curb Access Ramp
A	361	S.F.	Lt.-Sta. 10+46.00 to Sta. 11+02.50
B	45	S.F.	Rt.-Sta. 94+30.74 to 94+39.74
R22	43	S.F.	8.5' x 5' Conc. Driveway With 2-2' x 5' Detectable Warning Strips, Sta. 10+64.50, Lt. to Sta. 10+64.50, Rt., See Detail R35, Sheet 3 of 3 & Sheet SP9, 6" Thick
R25	1	Each	Sta. 10+64.22, 37.84' Rt. Conc. Curb Access Ramp See Detail R35, Type 3
R28	1	Each	Sta. 10+63.86, 29.30' Lt. Conc. Curb Access Ramp See Detail R35, Type 1

Pima County Department of Transportation

Priscilla S. Cornelio, P.E., Director

No.	Revision Description	Engineer	Date

		Date
Designed	L. Barela	July/2009
Drawn	S. Tucker, A. Young	July/2009
Checked	R. Britten	July/2009
Proj. Engr.	L. Barela	Aug/2009

Expires 03-31-2011

HDR Engineering, Inc.
5210 East Williams Circle, Suite 530
Tucson, AZ 85711-4459
(520) 584-3600

LA CHOLLA BLVD.
RUTHRAUFF RD. TO RIVER RD.
ROADWAY DETAILS
DETAIL R17

DETAIL R17

RUTHRAUFF RD.
DRIVEWAY DETAIL
STA. 94+87.01

Arizona Blue Stake
1-800-STAKE-IT
1-800-782-5348
Call Two Working Days Before You Dig

Scales	Horiz. 1" = 20' Vert. 1" = 2'	Sheet	RD14 of RD33	Page	60 of 356

012145
0000000000059914
Pima_County_Dept_of_Transportation\PCD01-La_Cholla_Blvd-Ruthrauff\13.00_CAD\Construction_Documents\Civil\17C-14.dgn

08\20\09 4:49:25 PM aledesma

Project # 4LCITR

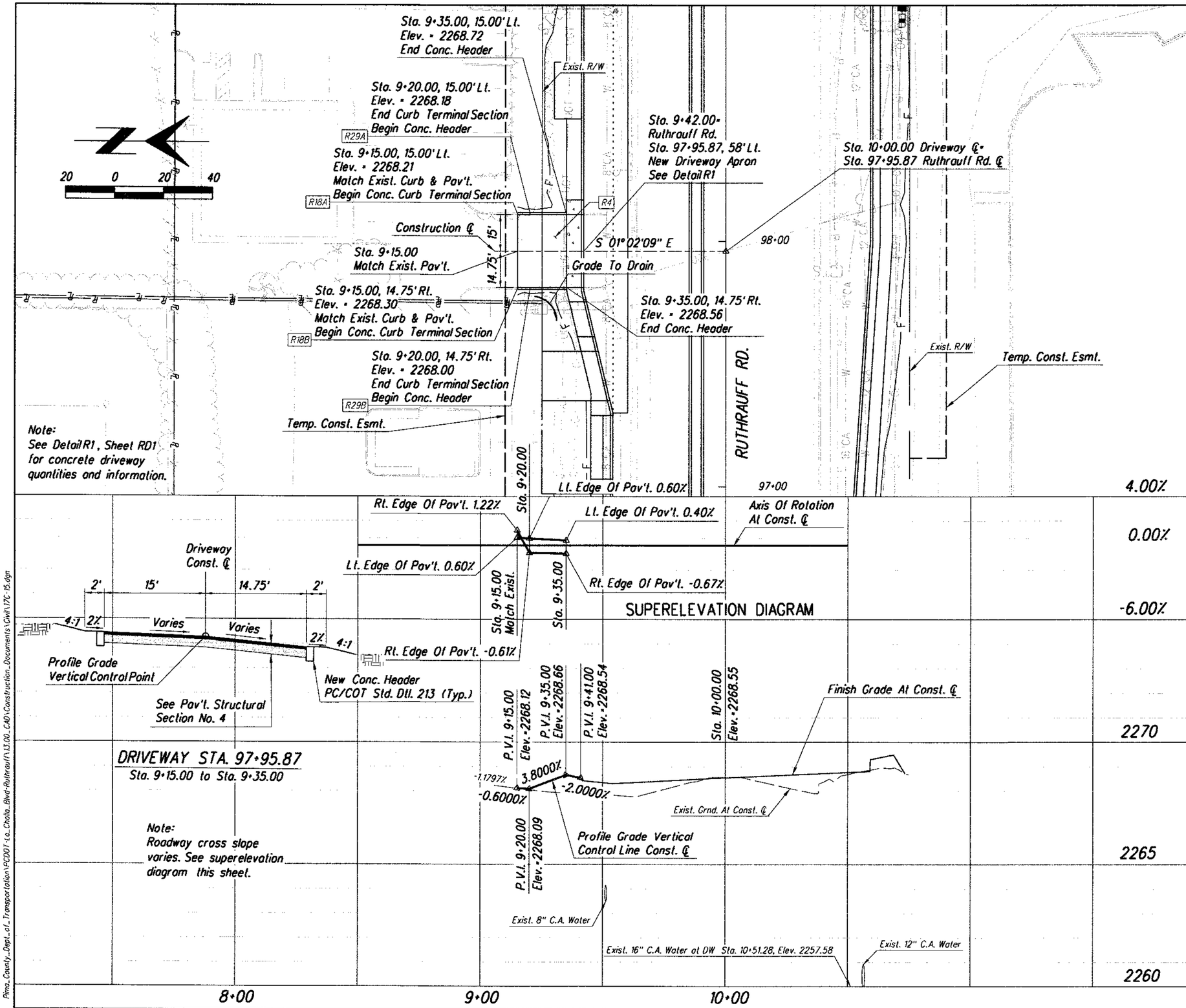

Item No.	Qty.	Unit	Description
R4	66	S.Y.	Pav't. Structure Sec. No. 4
R18	2	Each	5' Conc. Curb Terminal Sec. PC/COT Std. Dtl. 212
A	1	Each	Each Sta. 9+15, 15' Lt.
B	1	Each	Each Sta. 9+15, 14.75' Rt.
R29	30	L.F.	Conc. Header PC/COT Std. Dtl. 213
A	15	L.F.	Sta. 9+20.00, 15' Lt. to Sta. 9+35.00, 15' Lt.
B	15	L.F.	Each Sta. 9+20, 14.75' Rt. to Sta. 9+35.00, 14.75' Rt.

DETAIL R18

RUTHRAUFF RD.
DRIVEWAY DETAIL
STA. 97+95.87

Arizona Blue Stake
1-800-STAKE-IT
1-800-782-5348
Call Two Working Days Before You Dig

Priscilla S. Cornelio, P.E., Director

No.	Revision Description	Engineer	Date

		Date
Designed	L. Barela	July/2009
Drawn	S. Tucker, A. Young	July/2009
Checked	R. Britton	July/2009
Proj. Engr.	L. Barela	Aug/2009

Expires 03-31-2011

HDR Engineering, Inc.
5210 East Williams Circle, Suite 530
Tucson, AZ 85711-4459
(520) 584-3600

Pima County Department of Transportation

LA CHOLLA BLVD.
RUTHRAUFF RD. TO RIVER RD.
ROADWAY DETAILS
DETAIL R18

Scales	Horiz. 1" = 20' Verl. 1" = 2'	Sheet	RD15 of RD33	Page	61 of 356

Project = 4LCITR

08\20\09 4:49:30 PM oledesma

012145
0000000005914
Pima_County_Dept_of_Transportation\PCDOT-La_Cholla_Blvd-Ruthrauff\13.00_CAD\Construction_Documents\Civil\17C-15.dgn

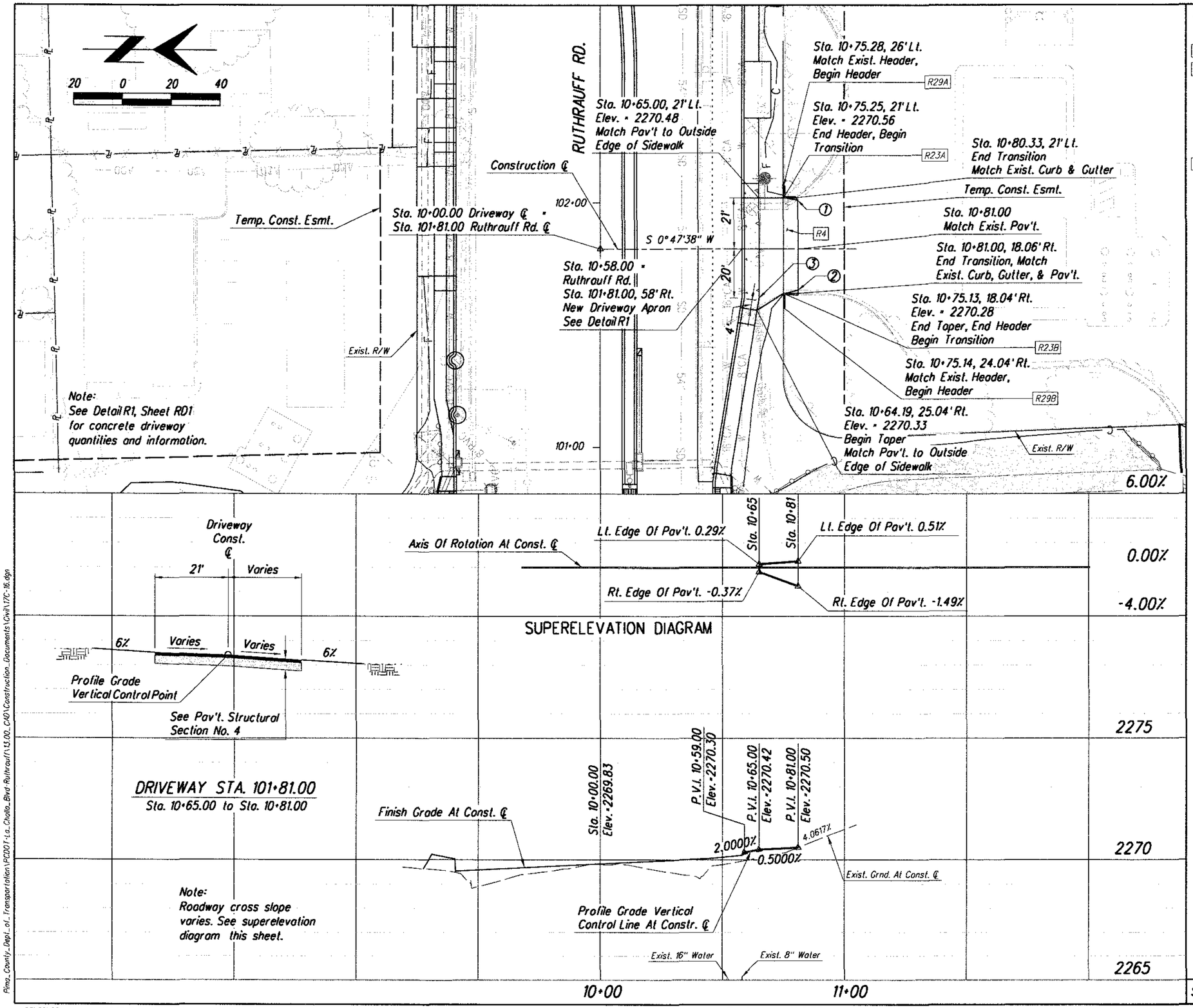

Item No.	Qty.	Unit	Description
R4	73	S.Y.	Pav't. Struct. Sec. No. 4
R23	10	L.F.	Conc. Transition Header To Curb & Gutter, See Detail R5, Sheet RD3
A	5	L.F.	Sta. 10+75.25, 21' Lt. to Sta. 10+80.33, 21' Lt.
B	5	L.F.	Sta. 10+75.13, 18' Rt. to Sta. 10+81.00, 18' Rt.
R29	11	L.F.	Conc. Header PC/COT Std. Dtl. 213
A	5	L.F.	Sta. 10+75.28, 26' Lt. to Sta. 10+75.25, 21' Lt.
B	6	L.F.	Sta. 10+75.11, 24' Rt. to Sta. 10+75.13, 18' Rt.

Notes:

1. Sta. 10+81.00, 20.02' Lt., Elev. = 2270.60
2. Sta. 10+81.00, 16.76' Rt., Elev. = 2270.25
3. Sta. 10+65.00, 20' Rt., Elev. = 2270.35

Priscilla S. Cornelio, P.E., Director

Designed	L. Barela	July/2009
Drawn	S. Tucker, A. Young	July/2009
Checked	R. Brittain	July/2009
Proj. Engr.	L. Barela	Aug/2009

No.	Revision Description	Engineer	Date

REGISTERED Professional Engineer (Civil) CERTIFICATE NO. 37267 L.J. BARELA Date Signed 8-24-09 ARIZONA, U.S.A.

Expires 03-31-2011

HDR

HDR Engineering, Inc.
5210 East Williams Circle, Suite 530
Tucson, AZ 85711-4459
(520) 584-3600

Pima County Department of Transportation

LA CHOLLA BLVD.
RUTHRAUFF RD. TO RIVER RD.
ROADWAY DETAILS
DETAIL R19

DETAIL R19

RUTHRAUFF RD.
DRIVEWAY DETAIL
STA. 101+81.00

Arizona Blue Stake
1-800-STAKE-IT
1-800-782-5348
Call Two Working Days Before You Dig

Scales	Horiz. 1" = 20' Vert. 1" = 2'	Sheet	RD16 of RD33	Page	62 of 356

012145
0000000000059914
Pima_County_Dept_of_Transportation\PCDOT-La_Cholla_Blvd-Ruthrauff\13.00_CAD\Construction_Documents\Civil\17C-16.dgn

08\20\09 4:49:35 PM aledesma

Project = 4LCITR

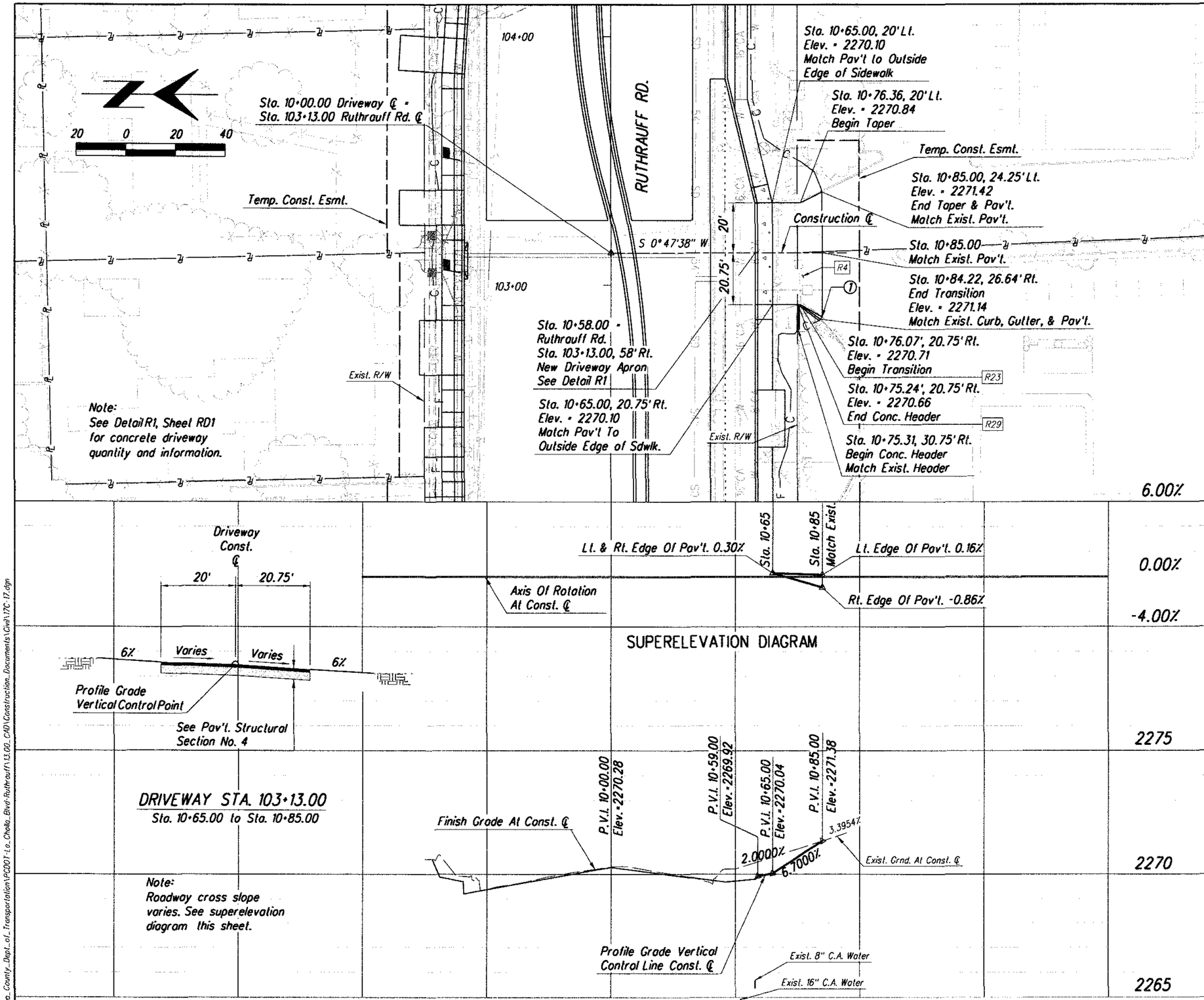

Item No.	Qty.	Unit	Description
R4	95	S.Y.	Pav't. Struct. Sec. No. 4
R23	10	L.F.	Sta. 10+76.07, 20.75' Rt. to Sta. 10+84.22, 26.64' Rt. Conc. Transition Header to Curb & Gutter, See Detail R5, Sheet RD3
R29	10	L.F.	Sta. 10+75.24, 20.75' Rt. to Sta. 10+75.31, 30.75' Rt. Conc. Header PC/COT Std. Dtl. 213

Notes:

(1) Sta. 10+85.00, 25.72' Rt., Elev. = 2271.16

DETAIL R20

RUTHRAUFF RD.
DRIVEWAY DETAIL
STA. 103+13.00

Arizona Blue Stake
1-800-STAKE-IT
1-800-782-5348
Call Two Working Days Before You Dig

Scales: Horiz. 1" = 20' / Vert. 1" = 2' | Sheet RD17 of RD33 | Page 63 of 356

Pima County Department of Transportation
Priscilla S. Cornelio, P.E., Director

No.	Revision Description	Engineer	Date

		Date
Designed	L. Barela	July/2009
Drawn	S. Tucker, A. Young	July/2009
Checked	R. Britton	July/2009
Proj. Engr.	L. Barela	Aug/2009

Registered Professional Engineer (Civil) CERTIFICATE NO. 37267 LUIS BARELA Date Signed 8-21-09 ARIZONA, U.S.A.
Expires 03-31-2011

HDR Engineering, Inc.
5210 East Williams Circle, Suite 530
Tucson, AZ 85711-4459
(520) 584-3600

LA CHOLLA BLVD.
RUTHRAUFF RD. TO RIVER RD.
ROADWAY DETAILS
DETAIL R20

012145
00000000005914
Pima_County_Dept_of_Transportation\PCDOT-La_Cholla_Blvd-Ruthrauff\13.00_CAD\Construction_Documents\Civil\17C-17.dgn

08\20\09 4:49:40 PM aledesma

Project # 4LCITR

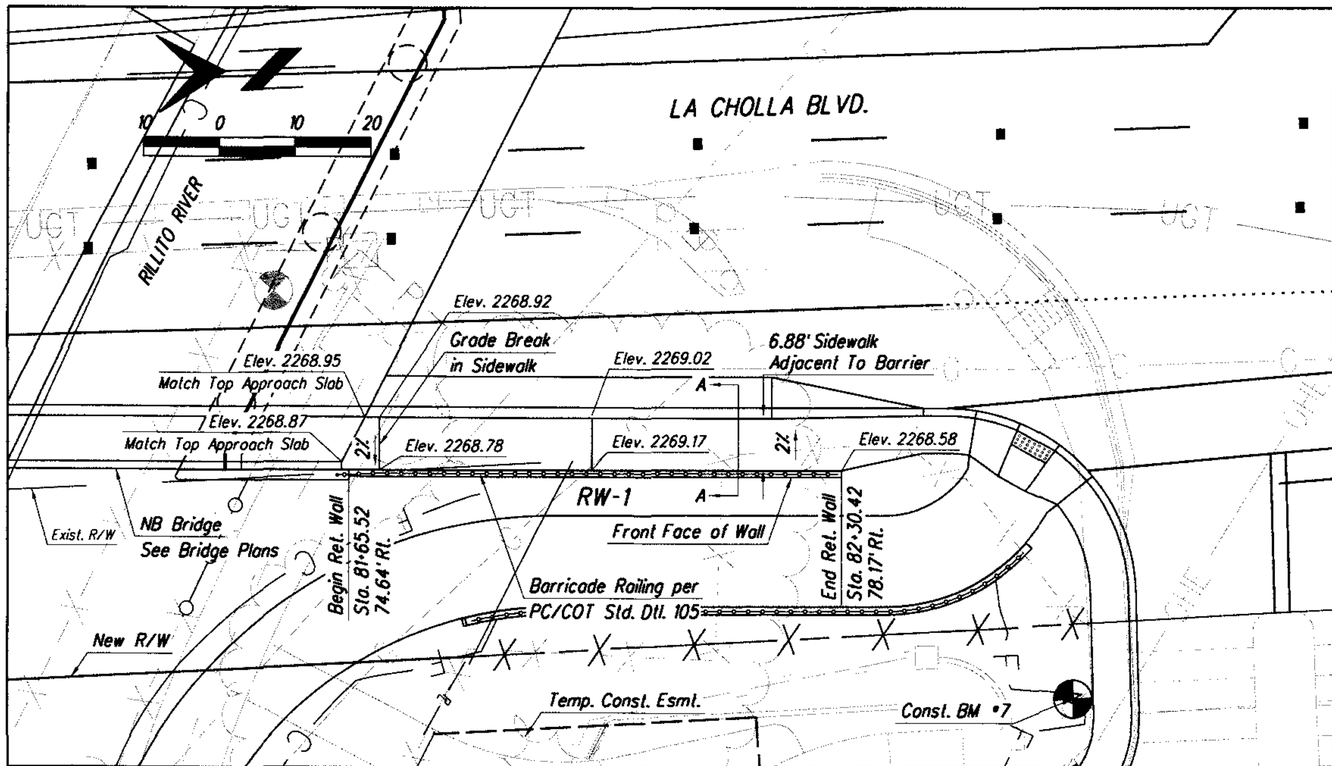

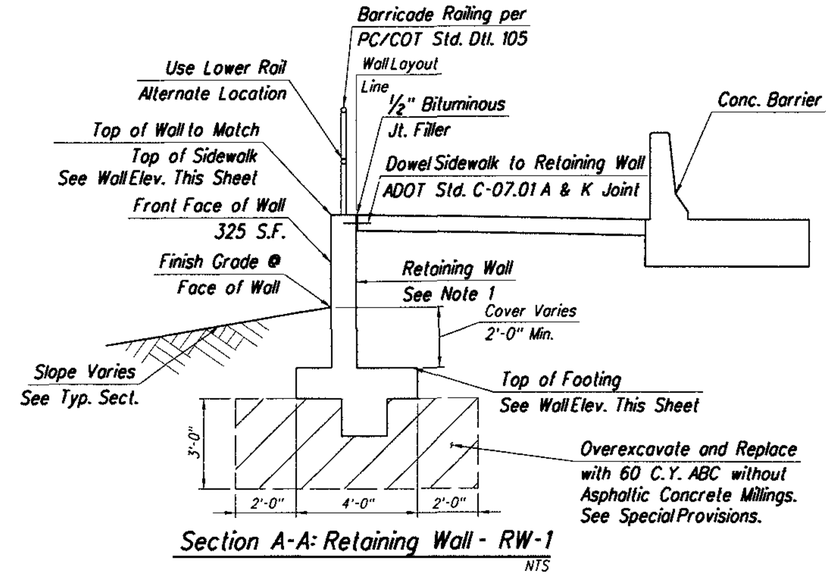

Section A-A: Retaining Wall - RW-1

NTS

Notes:
1. Retaining wall shall be constructed to conform to ADOT Std. Dwg. B18.10 & B18.20, Case II with 2' surcharge using the design height "H" shown on the wall elevation.

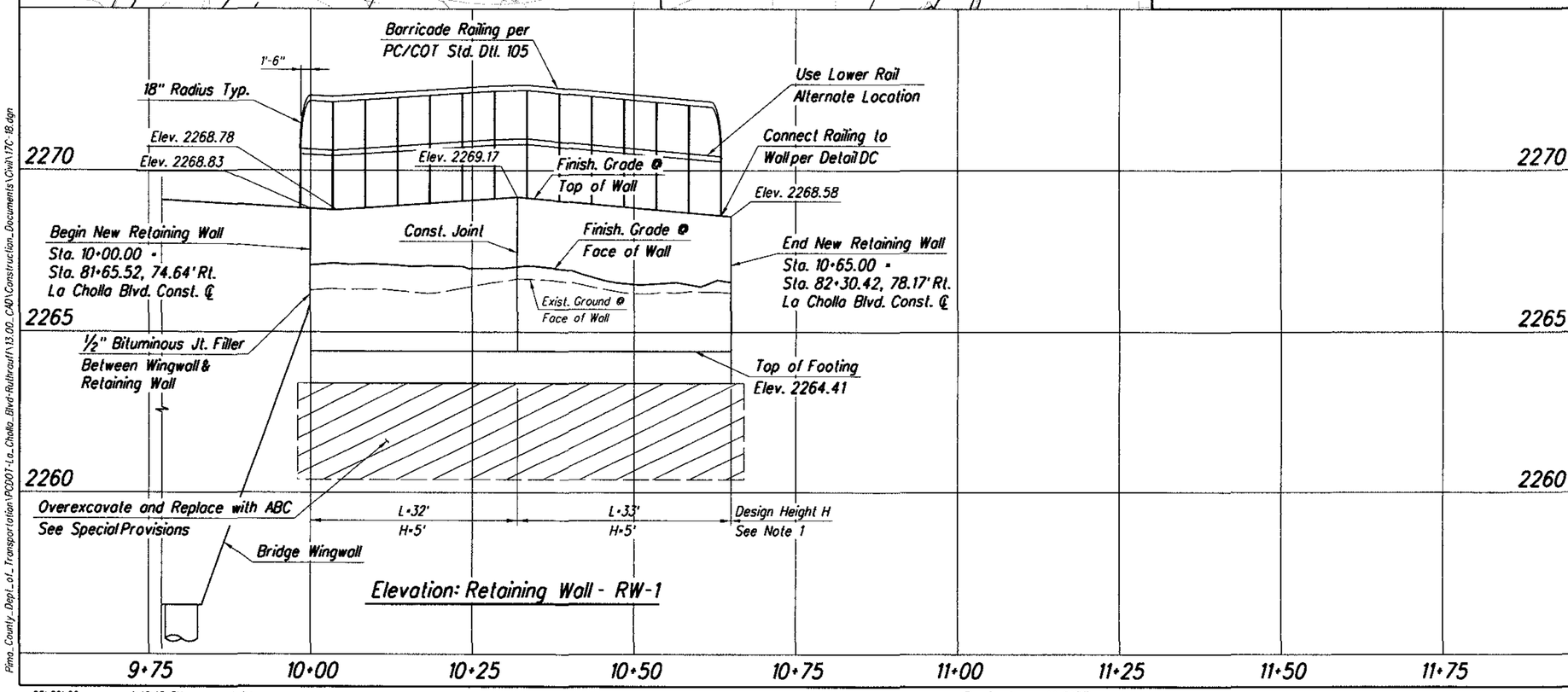

Elevation: Retaining Wall - RW-1

DETAIL R21

RETAINING WALL
RW-1

Arizona Blue Stake
1-800-STAKE-IT
1-800-782-5348
Call Two Working Days Before You Dig

Pima County Department of Transportation

Priscilla S. Cornelio, P.E., Director

No.	Revision Description	Engineer	Date

		Date
Designed	K. Monsen	July/2009
Drawn	H. Evans, K. Monsen	July/2009
Checked	R. Britton	July/2009
(Proj. Engr.	L. Barela	Aug/2009

Registered Professional Engineer (Civil) 37267 L.J. BARELA Date Signed 8-31-09 Arizona, U.S.A.
Expires 03-31-2011

HDR Engineering, Inc.
5210 East Williams Circle, Suite 530
Tucson, AZ 85711-4459
(520) 584-3600

LA CHOLLA BLVD.
RUTHRAUFF RD. TO RIVER RD.
ROADWAY DETAILS
DETAIL R21

Scales	Horiz. 1"=10' Vert. 1"=2'	Sheet RD18 of RD33	Page 64 of 356

012145
0000000000099914
Pima_County_Dept_of_Transportation\PCDOT-La_Cholla_Blvd-Ruthrauff\13.00_CAD\Construction_Documents\Civil\17C-18.dgn

08\20\09 4:49:45 PM aledesma

Project # 4LCITR

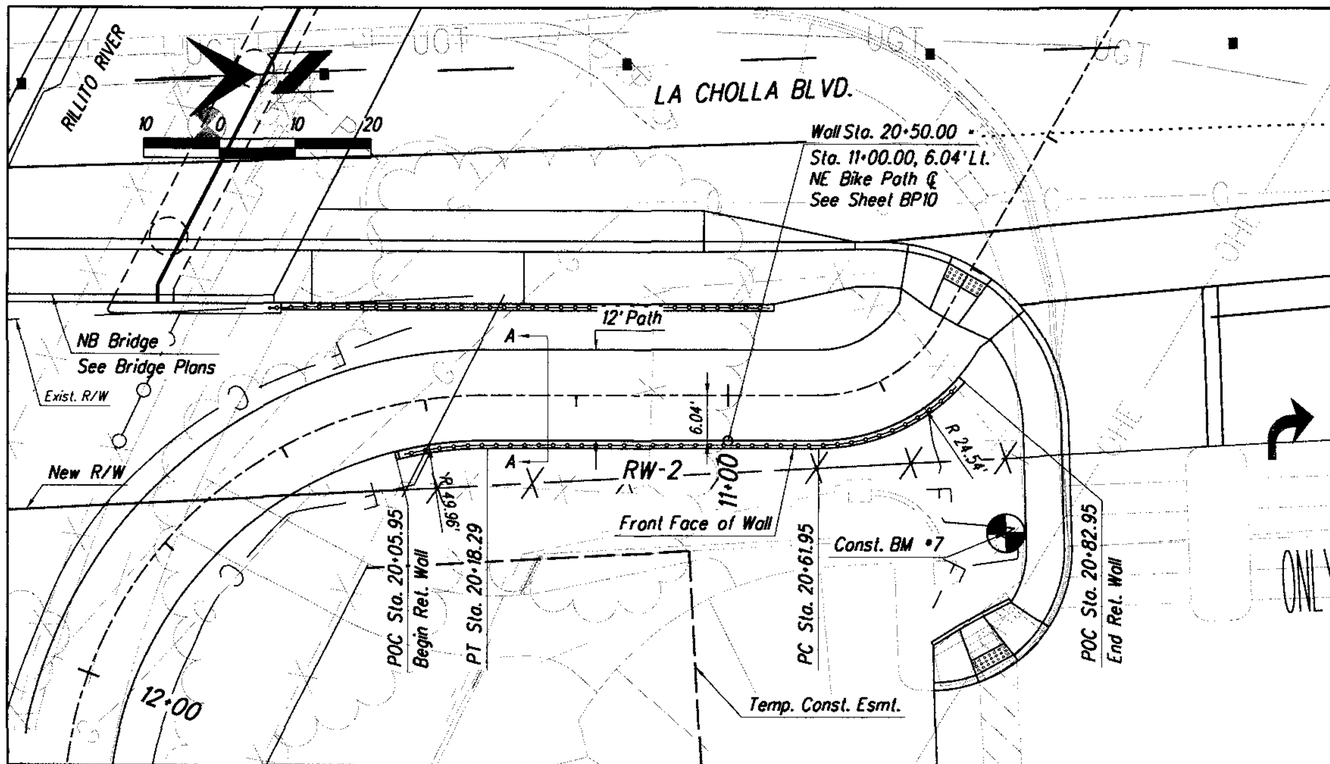

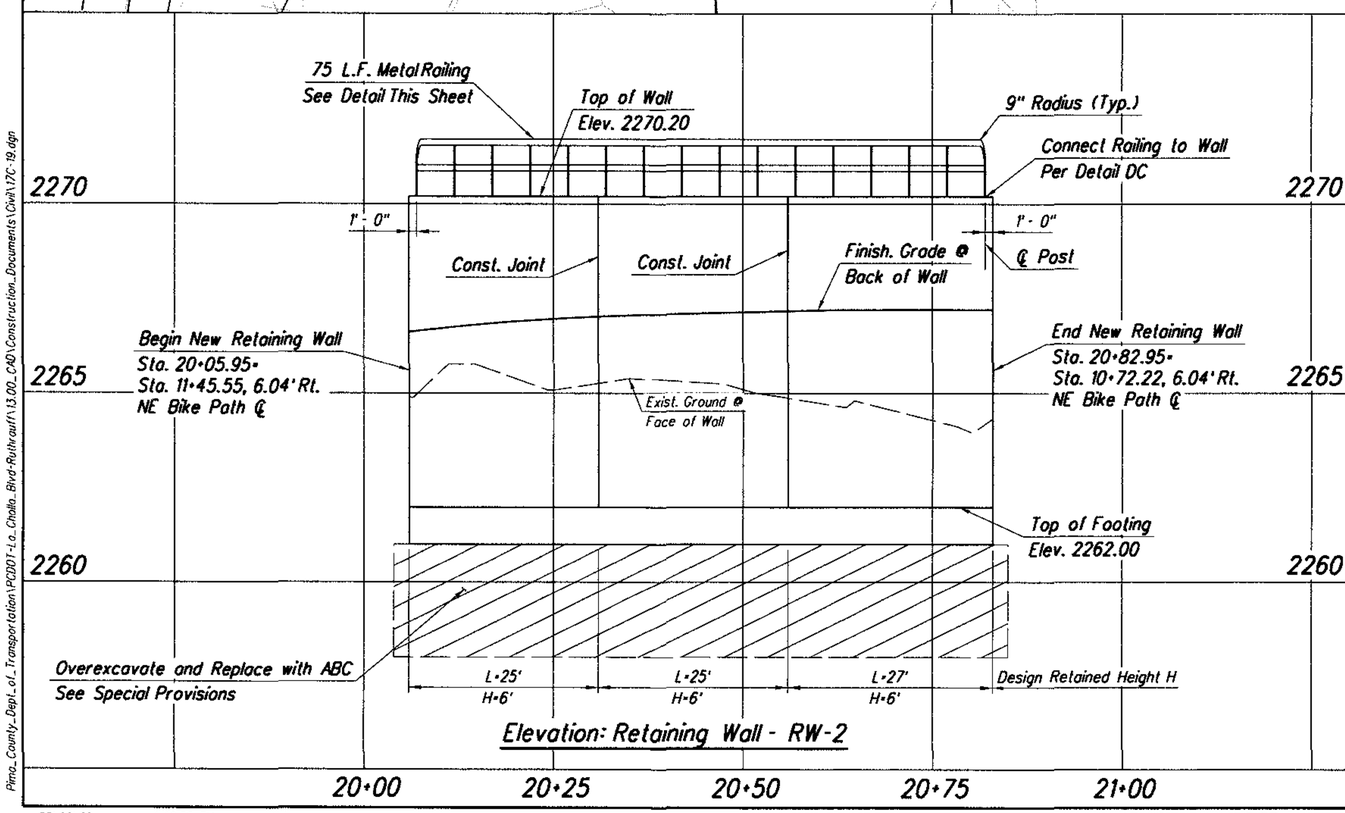

Elevation: Retaining Wall - RW-2

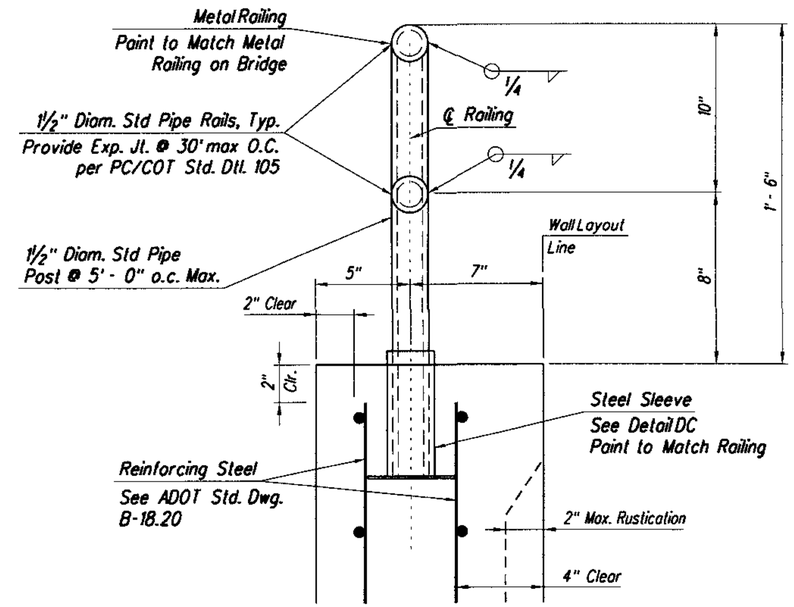

Metal Railing & Reinforcing Detail

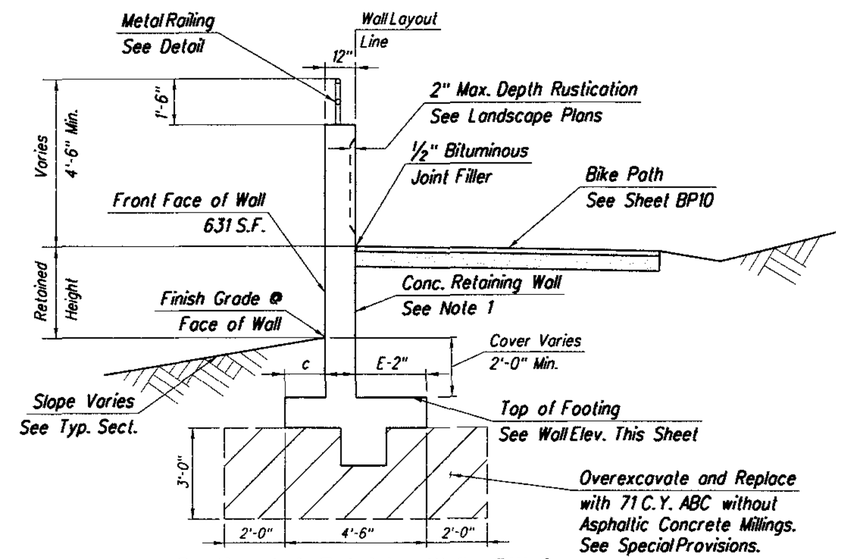

Section A-A: Retaining Wall - RW-2

NTS

Notes:
1. Retaining wall shall be constructed to conform to ADOT Std. Dwg. B-18.10 & B-18.20, Case II with 2' surcharge using the design retained height "H" shown on the wall elevation and the wall thickness shown in Section A-A.

2. Extend Std. reinf. to top of wall.

DETAIL R22

RETAINING WALL
RW-2

Arizona Blue Stake
1-800-STAKE-IT
1-800-782-5348
Call Two Working Days Before You Dig

Scales	Horiz. 1"=10' Vert. 1"=2'	Sheet	RD19 of RD33	Page	65 of 356

Project • 4LCITR

Pima County Department of Transportation
Priscilla S. Cornelio, P.E., Director

No.	Revision Description	Engineer	Date

		Date
Designed	L. Barela	July/2009
Drawn	H. Evers, K. Monsen	July/2009
Checked	R. Britton	July/2009
Proj. Engr.	L. Barela	Aug/2009

Registered Professional Engineer (Civil) 37267 L.E. BARELA Date Signed 8-24-09 Arizona, U.S.A.
Expires 03-31-2011

HDR Engineering, Inc.
5210 East Williams Circle, Suite 530
Tucson, AZ 85711-4459
(520) 584-3600

LA CHOLLA BLVD.
RUTHRAUFF RD. TO RIVER RD.
ROADWAY DETAILS
DETAIL R21

012145
00000000000059914
Pima_County_Dept_of_Transportation\PCDOT-La_Cholla_Blvd-Ruthrauff\13.00_CAD\Construction_Documents\Civil\17C-19.dgn

08\20\09 4:49:50 PM aledesma

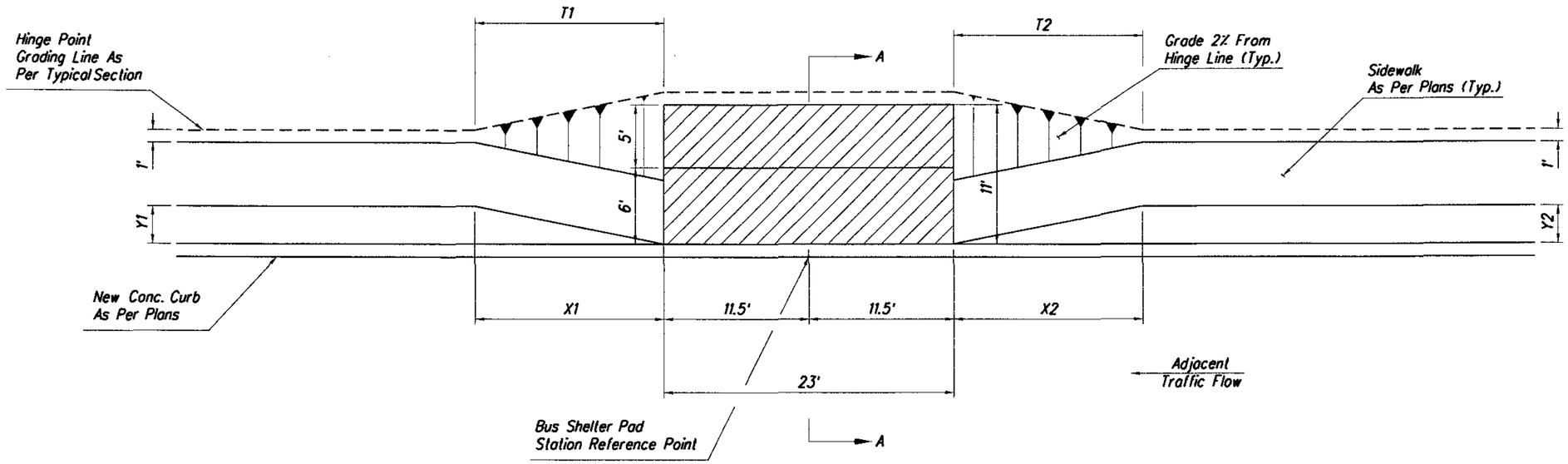

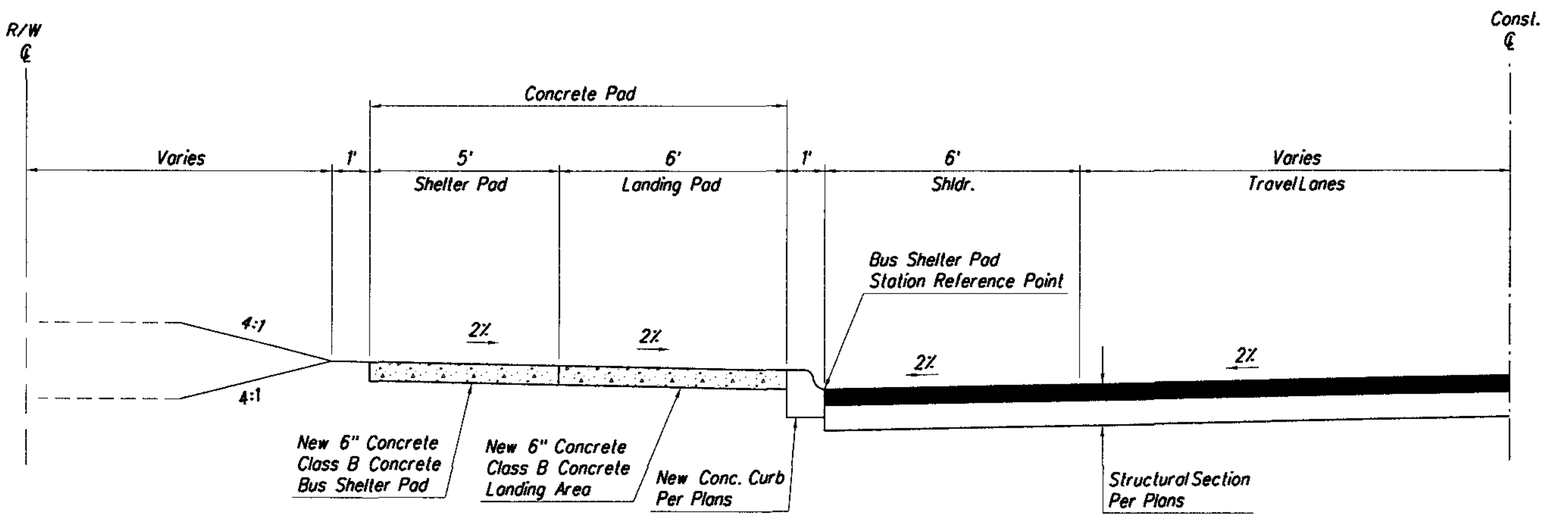

Note:
Concrete Bus Shelter Pad and Landing Pad is Quantified Under Concrete Pad, and will be paid under item #9080301.

SECTION A-A
N.T.S.

5 0 5 10

STATION	OFFSET	X1 (feet)	X2 (feet)	Y1 (feet)	Y2 (feet)	T1 (feet)	T2 (feet)	Conc. Pad (S.F.)	COMMENTS
62+58.00	50' Rt.	15	40	3	8	15	15	253	See Sheet R4
63+88.50	50' Lt.	32	15	12	3	15	15	253	See Sheet R4
74+36.50	50' Lt.	15	15	3	3	15	15	253	See Sheet R5
74+48.50	50' Rt.	15	15	3	3	15	15	253	See Sheet R5
							Total	1012	

DETAIL R23

NON-PULLOUT BUS SHELTER
& LANDING PAD DETAIL

Arizona Blue Stake
1-800-STAKE-IT
1-800-782-5348
Call Two Working Days Before You Dig

Priscilla S. Cornelio, P.E., Director

No.	Revision Description	Engineer	Date

		Date
Designed	L. Barela	July 2009
Drawn	D. Westenberg	July 2009
Checked	R. Brittain	July 2009
Proj. Engr.	L. Barela	Aug 2009

Registered Professional Engineer (Civil) CERTIFICATE NO. 37267 LUIS A. BARELA Date Signed 8-24-09 ARIZONA, U.S.A.
Expires 03-31-2011

HDR Engineering, Inc.
5210 East Williams Circle, Suite 530
Tucson, AZ 85711-4459
(520) 584-3600

Pima County Department of Transportation

LA CHOLLA BLVD.
RUTHRAUFF RD. TO RIVER RD.
ROADWAY DETAILS
NON-PULLOUT BUS SHELTER
& LANDING PAD DETAIL R23

Scales	Horiz. 1"=5' N/A	Sheet RD20 of RD33	Page 66 of 356

Project # 4LCITR

012145
0000000000059914
Pima_County_Dept_of_Transportation\PCDOT-La_Cholla_Blvd-Ruthrauff\13.00_CAD\Construction_Documents\Civil\17C-20.dgn

08\20\09 4:49:55 PM aledesmo

GENERAL NOTES

1. The FLEAT-350 shall be installed in accordance with the manufacturer's specifications and current approved drawings including all details, hardware, hardware quantities, and other information.
2. The current manufacturer's approved drawing is number FLT-W-US-AZ, Current Revision 11/26/02. Visit the ADOT Roadway Design web site to view and print the drawing.

   Dimensions shown in ( ) correspond to 2.5' flare. These plans utilize the 4' flare.
3. See specifications and ADOT Traffic Signing and Marking Standard Drawings.
4. See plans and Detail R32 for Guardrail Apron Layout.

▲ Top of Guardrail = 28"
See General Note 1
ADOT Std C-10.03

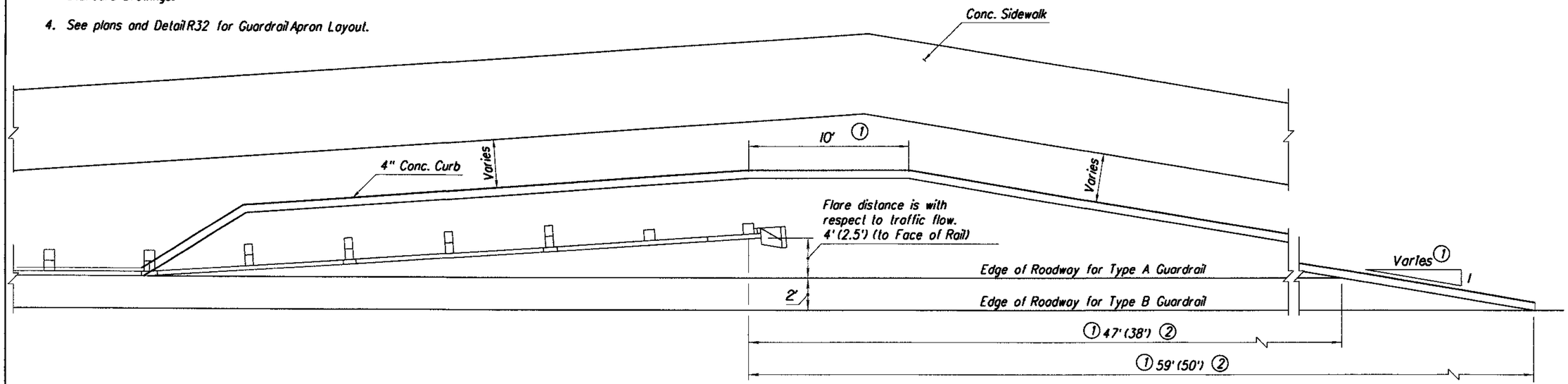

PLAN

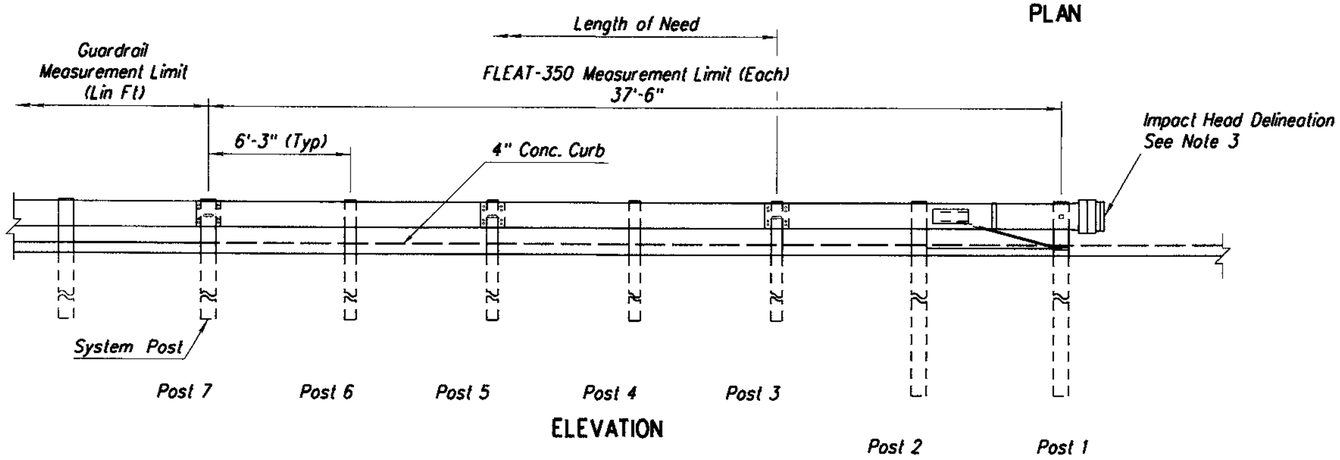

ELEVATION

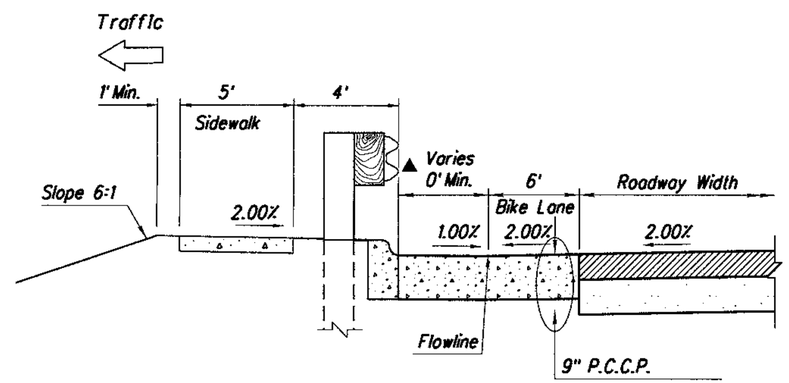

TYPE A INSTALLATION SHOWN

DETAIL R24

FLEAT 350 LAYOUT

Arizona Blue Stake
1-800-STAKE-IT
1-800-782-5348
Call Two Working Days Before You Dig

Scales		Sheet RD21 of RD33	Page 67 of 356

Pima County Department of Transportation

Priscilla S. Cornelio, P.E., Director

No.	Revision Description	Engineer	Date

		Date
Designed	L. Barela	July/2009
Drawn	D. Westenberg	July/2009
Checked	R. Britton	July/2009
Proj. Engr.	L. Barela	Aug/2009

Expires 03-31-2011

HDR Engineering, Inc.
5210 East Williams Circle, Suite 530
Tucson, AZ 85711-4459
(520) 584-3600

LA CHOLLA BLVD.
RUTHRAUFF RD. TO RIVER RD.
ROADWAY DETAILS
FLEAT 350 DETAIL R24

012145
0000000000059914
Pima_County_Dept_of_Transportation\PCDOT-La_Cholla_Blvd-Ruthrauff\13.00_CAD\Construction_Documents\Civil\17C-21.dgn

08\20\09 4:50:00 PM aledesma

Project • 4LCITR

Note:
See Detail R27 for
Additional Information.

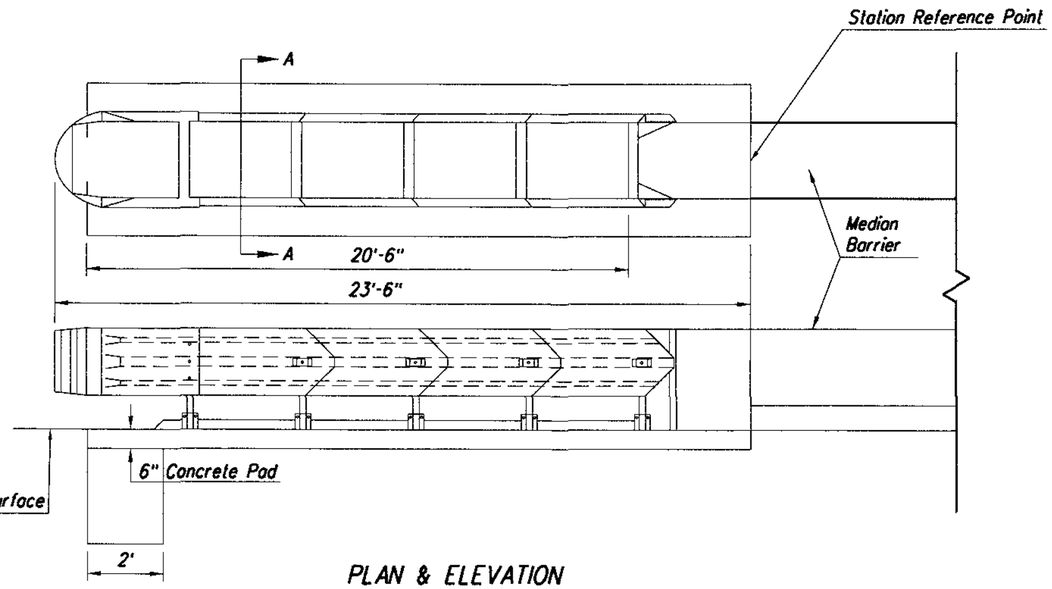

PLAN & ELEVATION
NTS

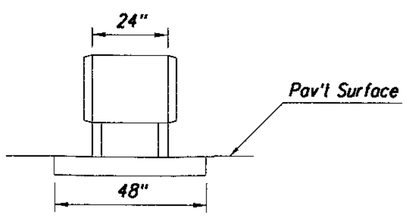

SECTION A-A
NTS

Notes:

This Median Attenuator will be paid for under Bid Item No. 7020002.

See Special Provisions and Manufacturer's requirements for construction information.

DETAIL R25

MEDIAN ATTENUATOR

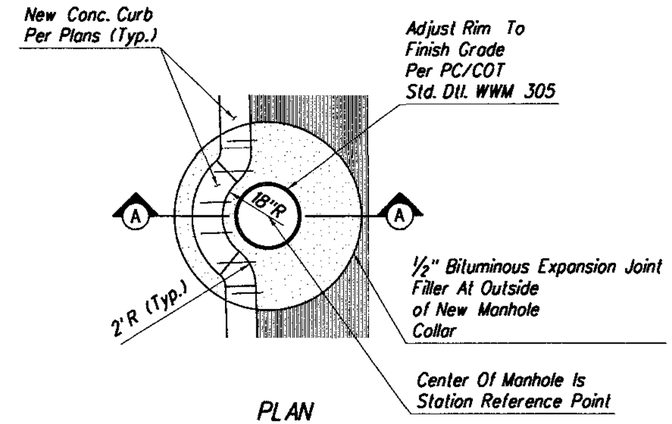

PLAN
NTS

La Cholla Blvd. Sta. 54+38.84, 50.38' Rt. Sewer MH #9715-04
Ruthrauff Rd. Sta. 92+43.83, 43.29' Lt. Sewer MH #9717-40A
Ruthrauff Rd. Sta. 101+13.27, 58.46' Lt. Sewer MH 9715-08

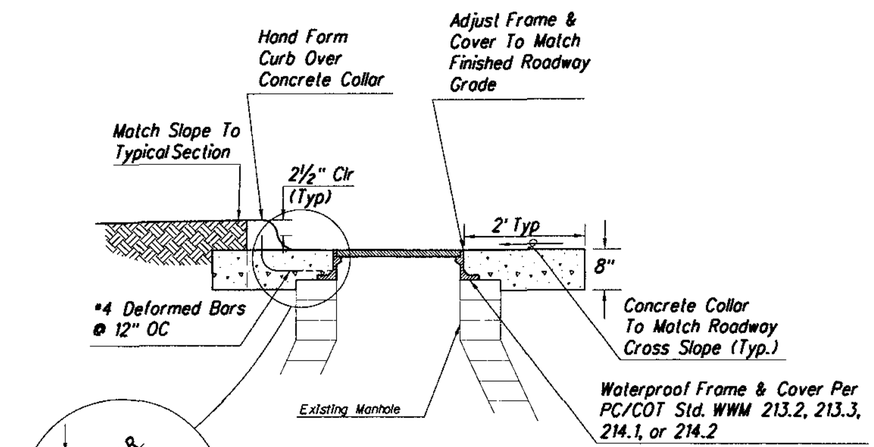

SECTION A-A
NTS

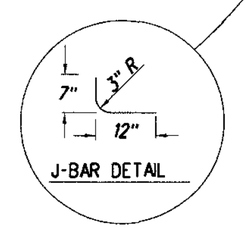

J-BAR DETAIL

Notes:

1. Concrete shall be Class B.
2. All work shown in this detail will be incidental to the work paid under Bid Item No. 5090201. See Storm Drain Plans for additional information.

DETAIL R26

MANHOLE/CURB CONFLICT

Arizona Blue Stake
1-800-STAKE-IT
1-800-782-5348
Call Two Working Days Before You Dig

Pima County Department of Transportation
Priscilla S. Cornelio, P.E., Director

Designed	L. Barela	July/2009
Drawn	D. Westenberg	July/2009
Checked	R. Britton	July/2009
Proj. Engr.	L. Barela	Aug/2009

No.	Revision Description	Engineer	Date

Expires 03-31-2011

HDR Engineering, Inc.
5210 East Williams Circle, Suite 530
Tucson, AZ 85711-4459
(520) 584-3600

LA CHOLLA BLVD.
RUTHRAUFF RD. TO RIVER RD.
ROADWAY DETAILS
DETAILS R25 & R26

Scales	Horiz. N/A	Sheet RD22 of RD33	Page 68 of 356
	Vert. N/A		

012145
000000000055994
Pima_County_Dept._of_Transportation\PCDOT-La_Cholla_Blvd-Ruthrauff\13.00_CAD\Construction_Documents\Civil\17C-22.dgn

08\20\09 4:50:04 PM aledesma

Project # 4LCITR

Note:
See Sheet SP5 for Grading Information.

Item No.	Qty.	Unit	Description
R8	369.9	L.F.	Concrete Traffic Barrier (Type F) (42"), See ADOT Std. Dwg. SD 1.02
A	83.8	L.F.	Sta. 77+24.83 Rt. to 78+15.66 Lt.
B	69.7	L.F.	Sta. 77+33.02 Rt. to 78+02.54 Rt.
C	101.0	L.F.	Sta. 82+12.13 Lt. to 83+13.02 Lt.
D	115.4	L.F.	Sta. 81+98.85 Rt. to 83+13.23 Rt.

Item No.	Qty.	Unit	Description
R30	2	Each	Conc. Traffic Barrier Junction Transition, See Dtl. R34
A	1	Each	Sta. 77+18.06, 6.86' Rt.
B	1	Each	Sta. 83+28.00, 2.50' Lt.
R34	30.1	L.F.	42" Full Conc. Median Barrier, ADOT Std. C-10.41
A	8.1	L.F.	Sta. 77+10.00, 5.84' Rt to 77+18.06, 5.84' Rt.
B	22.0	L.F.	Sta. 83+28.00, 1.48' Lt to 83+50.00, 1.48' Lt.
R37	2	Each	Median Impact Attenuator, See Dtl. R25
A	1	Each	Sta. 77+10.00, 6.86' Rt.
B	1	Each	Sta. 83+50.00, 2.50' Lt.

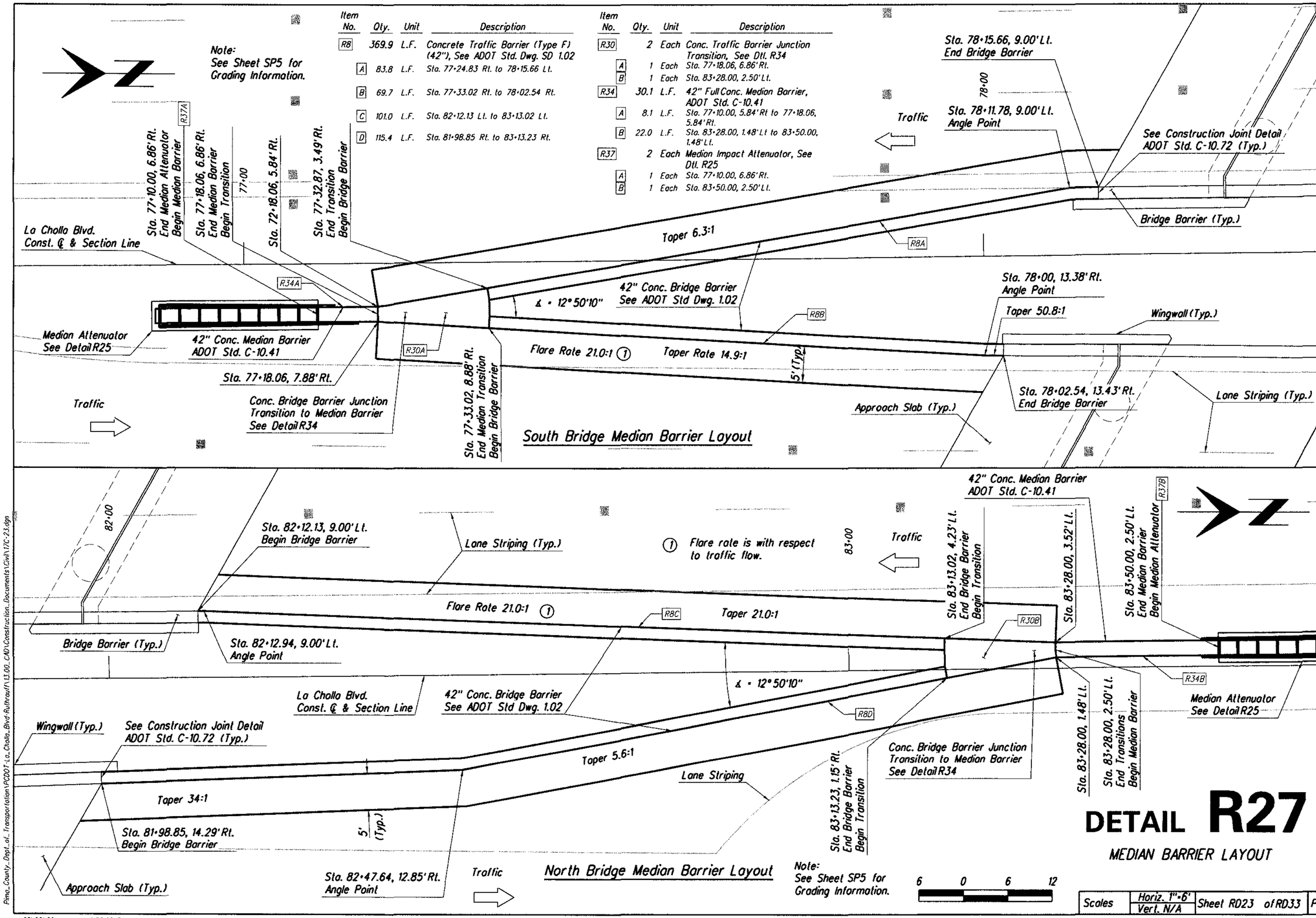

Note:
See Sheet SP5 for Grading Information.

6 0 6 12

DETAIL R27

MEDIAN BARRIER LAYOUT

No.	Revision Description	Engineer	Date

Priscilla S. Cornelio, P.E., Director

		Date
Designed	L. Barela	July/2009
Drawn	D. Wostenberg	July/2009
Checked	R. Brittain	July/2009
Proj. Engr.	L. Barela	Aug/2009

Expires 03-31-2011

HDR Engineering, Inc.
5210 East Williams Circle, Suite 530
Tucson, AZ 85711-4459
(520) 584-3600

Pima County Department of Transportation

LA CHOLLA BLVD.
RUTHRAUFF RD. TO RIVER RD.
ROADWAY DETAILS
MEDIAN BARRIER LAYOUT
DETAIL R27

Scales	Horiz. 1"=6' / Vert. N/A	Sheet RD23 of RD33	Page 69 of 356

012145
00000000005991
Pima_County_Dept_of_Transportation\PCDOT-La_Cholla_Blvd-Ruthrauff\13.00_CAD\Construction_Documents\Civil\17C-23.dgn

08\20\09 4:50:08 PM aledesma

Project • 4LCITR

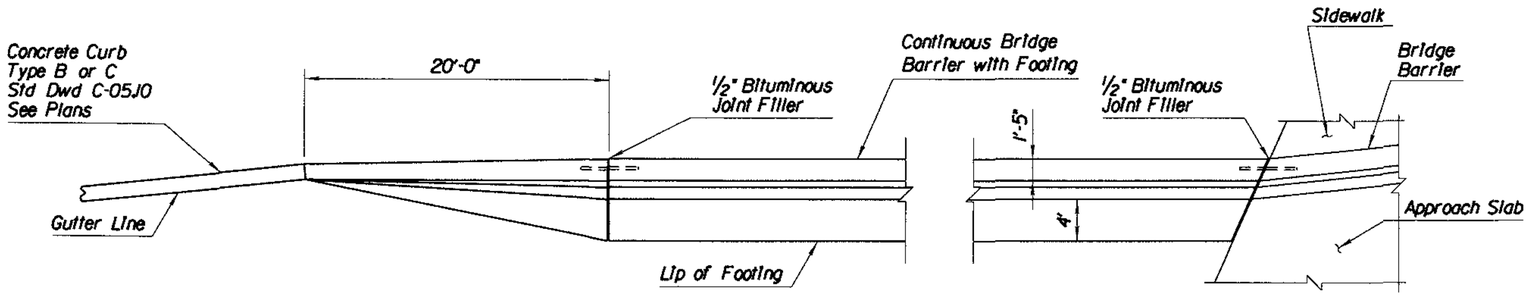

PLAN VIEW
NTS

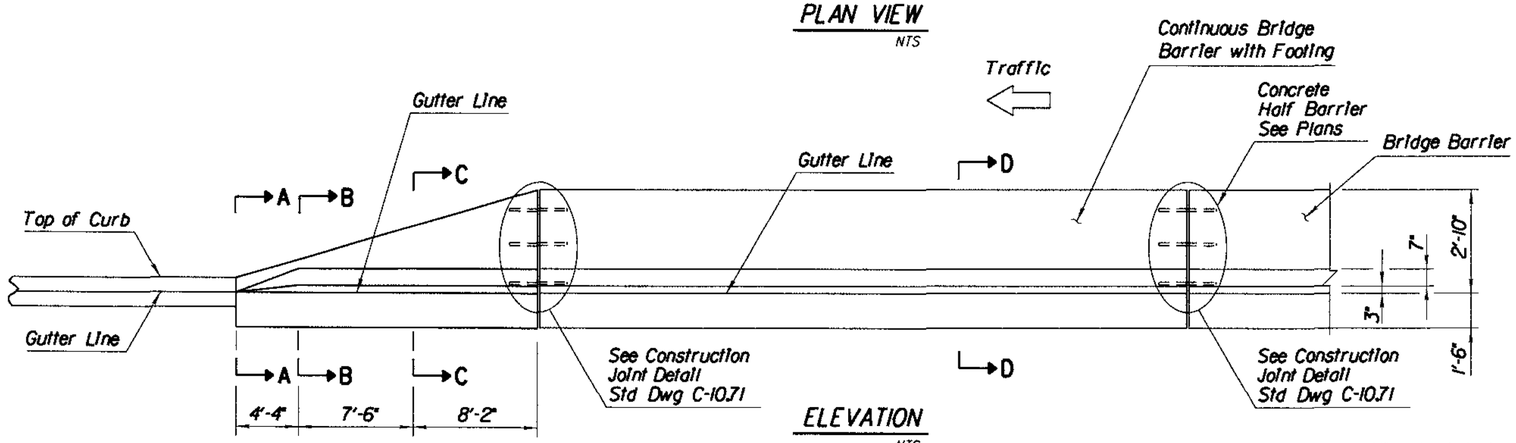

ELEVATION
NTS

GENERAL NOTES

1. All concrete shall be Class S, f'c=4000 PSI.
2. All rebar shall conform to Section 1003 of the Standard Specifications.
3. All rebar shall have 2" minimum clear cover unless otherwise noted.
4. See drainage sheets for slotted drain and catch basin details.
5. Barrier transition shall match both adjoining curb and gutter and concrete half barrier.
6. All bend dimensions for rebar shall be out-to-out of bars.
7. Two-inch deep contraction joints shall be placed in the gutter at locations which match the joints in adjacent PCCP and at approximate 15-foot centers when adjacent to AC pavement. Joints shall be either hand tooled or sawn.
8. This Barrier Transition will be paid for under Bid Item No. 9080113.

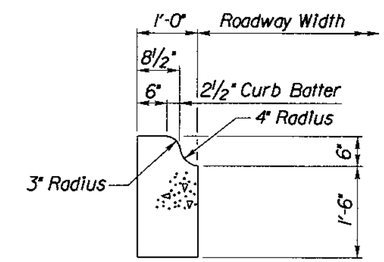

SECTION A-A

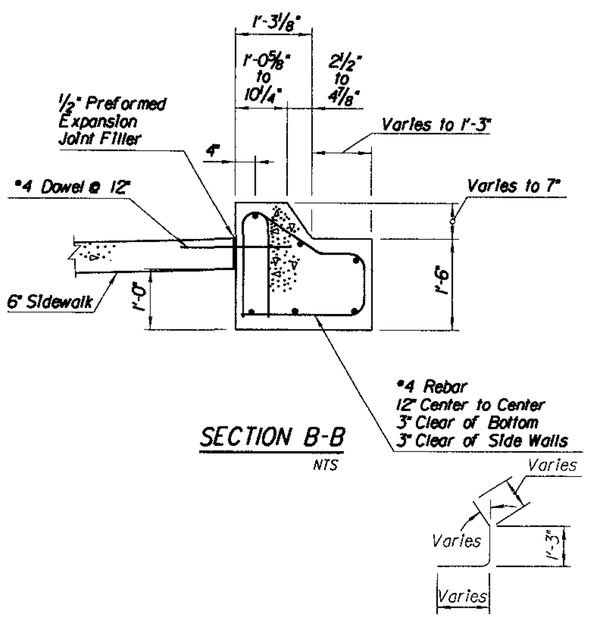

SECTION B-B
NTS

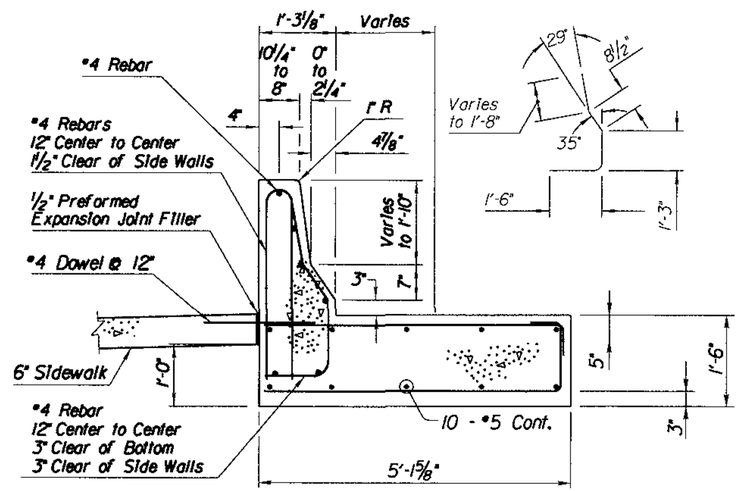

SECTION C-C
NTS

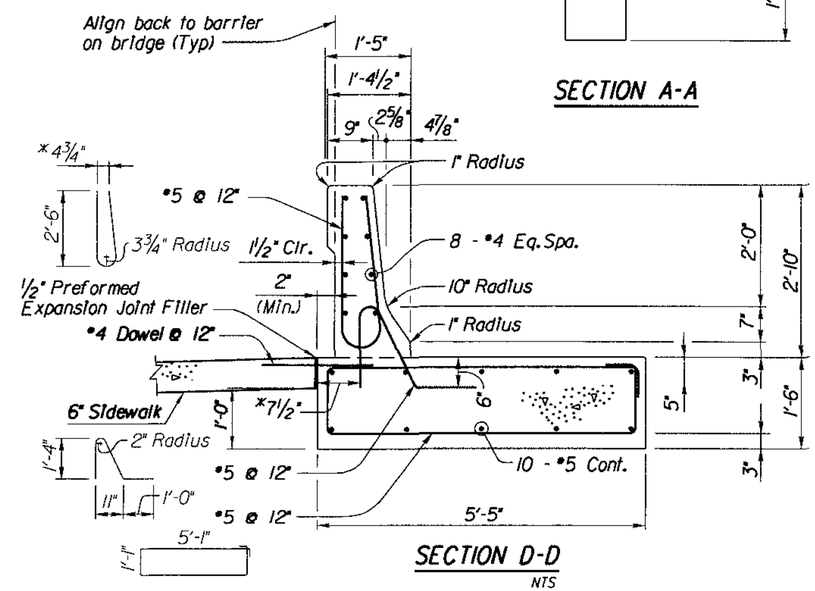

SECTION D-D
NTS

* Varies at Taper Length

DETAIL R28

BARRIER TRANSITION

No.	Revision Description	Engineer	Date

			Date
Designed	L. Barela, T. Buell		July/2009
Drawn	T. King		July/2009
Checked	R. Britton		July/2009
Proj. Engr.	L. Barela		Aug/2009

Priscilla S. Cornelio, P.E., Director

Expires 03-31-2011

HDR Engineering, Inc.
5210 East Williams Circle, Suite 530
Tucson, AZ 85711-4459
(520) 584-3600

Pima County Department of Transportation

LA CHOLLA BLVD.
RUTHRAUFF RD. TO RIVER RD.
ROADWAY DETAILS
BARRIER TRANSITION
DETAIL R28

Scales	Horiz. N/A	Sheet RD24 of RD33	Page 70 of 356
	Vert. N/A		

012145
00000000005994
Pima_County_Dept_of_Transportation\PC001-La_Cholla_Blvd-Ruthrauff\13.00_CAD\Construction_Documents\Civil\17C-24.dgn

08\20\09 4:50:12 PM aledesma

Project • 4LCITR

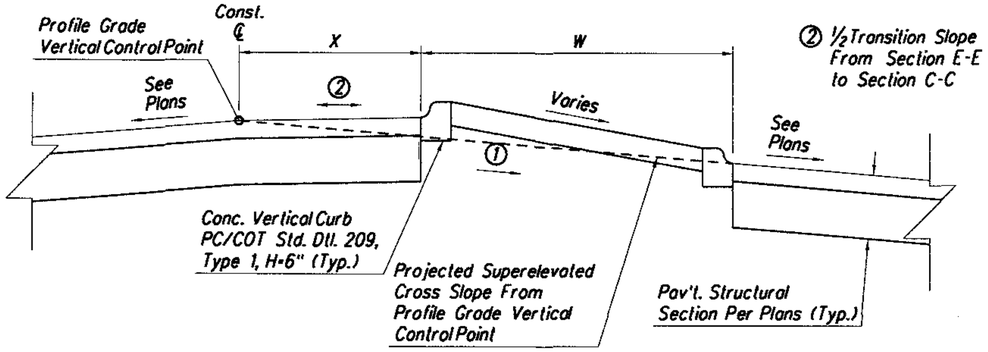

SECTION D-D
N.T.S.

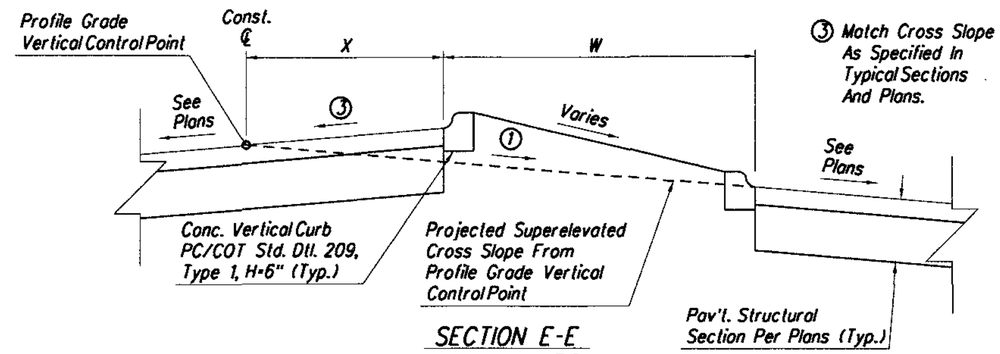

SECTION E-E
N.T.S.

Notes:
See Staking Plans Sheet SP 8 For Grading Information
At Uneven Median Cross Walk Locations: Medians B, C, And D.

The Crosswalk, Curb and Detectable Warning Strip will be paid for under Bid Item No. 9080287.

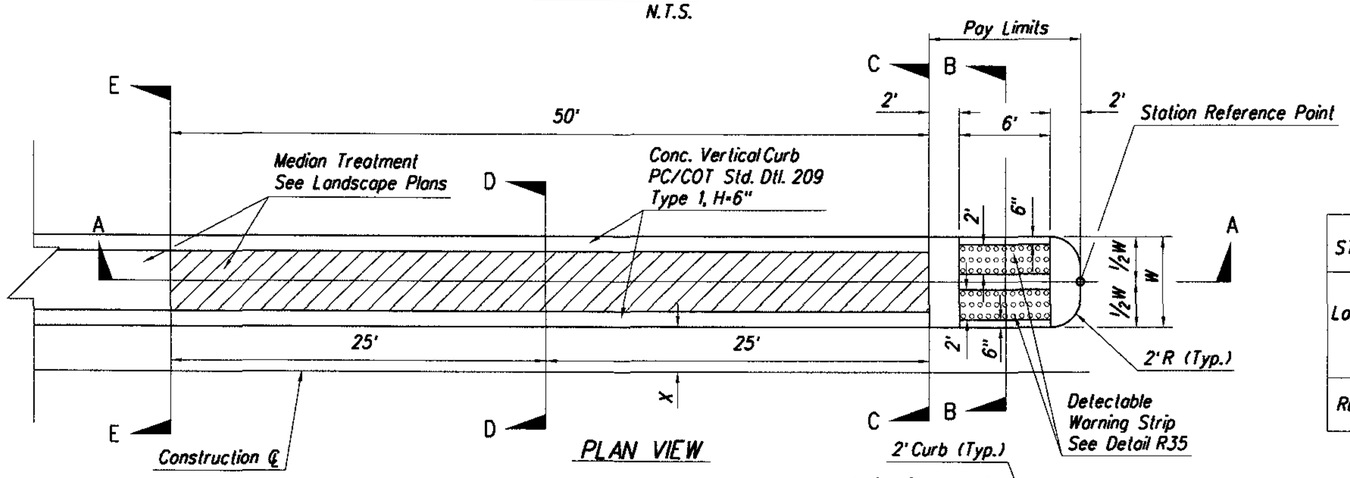

PLAN VIEW

STREET NAME	MEDIAN CROSS WALK NAME	STATION REFERENCE POINT	OFFSET	X	W	2' CURB (L.F.)	CROSS WALK AREA (S.F.)
La Cholla Blvd.	A	Sta. 49+36.00	16' Lt.	13'	6'	12	36
	B	Sta. 50+82.00	6' Rt.	3'	6'	12	36
	D	Sta. 75+35.64	7' Lt.	4'	6'	12	36
	E	Sta. 76+21.68	5' Lt.	0'	10'	20	60
Ruthruaff Rd.	F	Sta. 99+29.00	12' Lt.	9'	6'	12	36
	G	Sta. 100+75.00	12' Rt.	9'	6'	12	36
Total	6	Each					

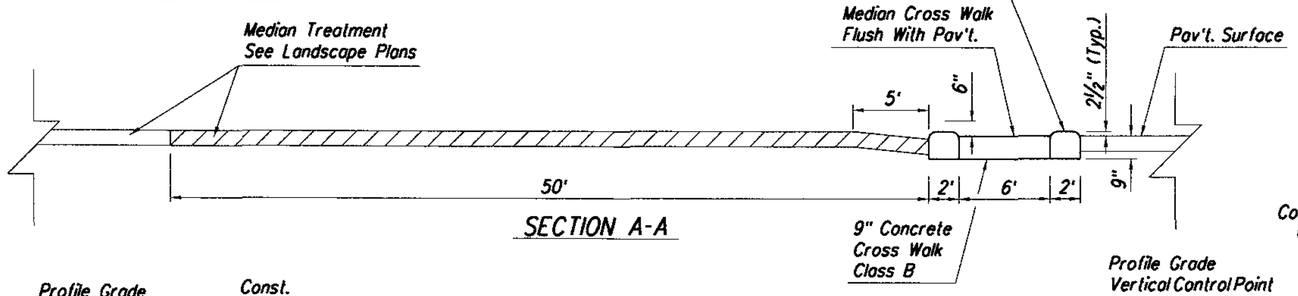

SECTION A-A

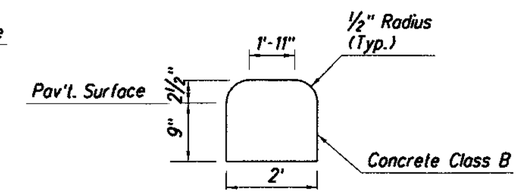

2' CURB

DETAIL R29

CURB ACCESS RAMP
SPECIAL

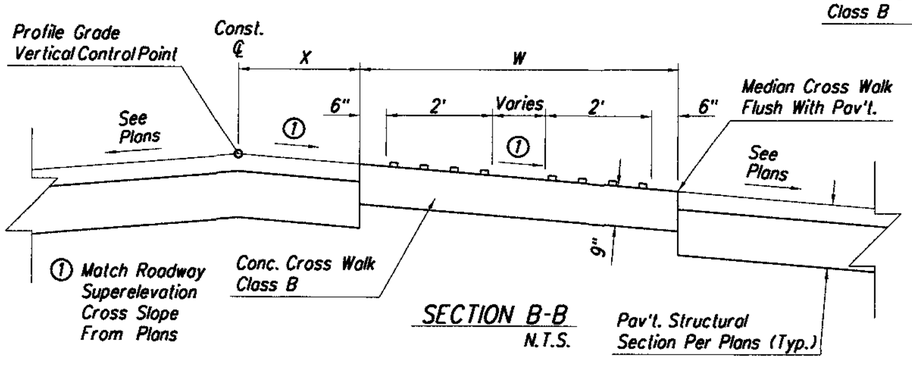

SECTION B-B
N.T.S.

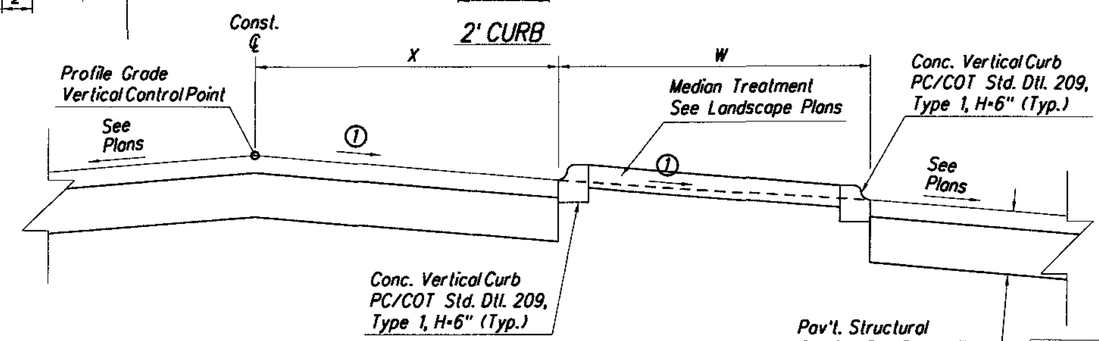

SECTION C-C
N.T.S.

Arizona Blue Stake
1-800-STAKE-IT
1-800-782-5348
Call Two Working Days Before You Dig

Scales	Horiz. 1"=5' N/A	Sheet RD25 of RD33	Page 71 of 356

Project # 4LCITR

Priscilla S. Cornelio, P.E., Director

No.	Revision Description	Engineer	Date

		Date
Designed	L. Barela	July/2009
Drawn	J. Cruz	July/2009
Checked	R. Britton	July/2009
Proj. Engr.	L. Barela	Aug/2009

Expires 03-31-2011

HDR Engineering, Inc.
5210 East Williams Circle, Suite 530
Tucson, AZ 85711-4459
(520) 584-3600

Pima County Department of Transportation

LA CHOLLA BLVD.
RUTHRAUFF RD. TO RIVER RD.
CURB ACCESS RAMP
SPECIAL
DETAIL R29

012145
0000000000059914
Pima_County_Dept._of_Transportation\PCDOT-La_Cholla_Blvd-Ruthrauff\13.00_CAD\Construction_Documents\Civil\TC-25.dgn

08\20\09 4:50:17 PM aledesma

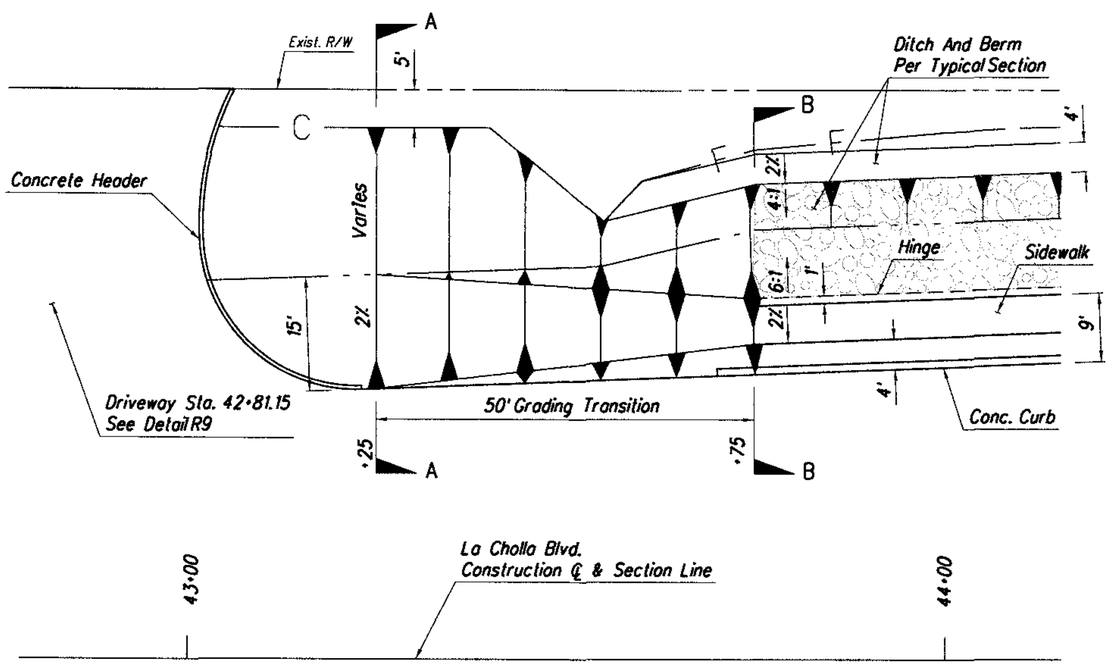

Note:
Rock mulch will be paid for under bid item No. 8030031

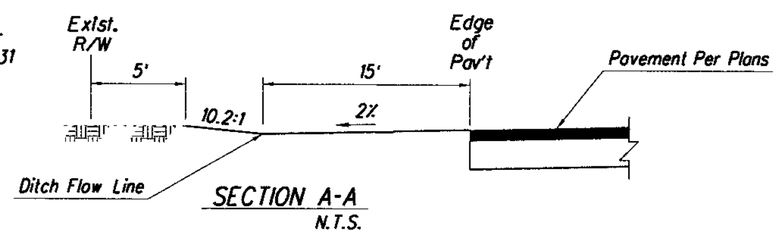

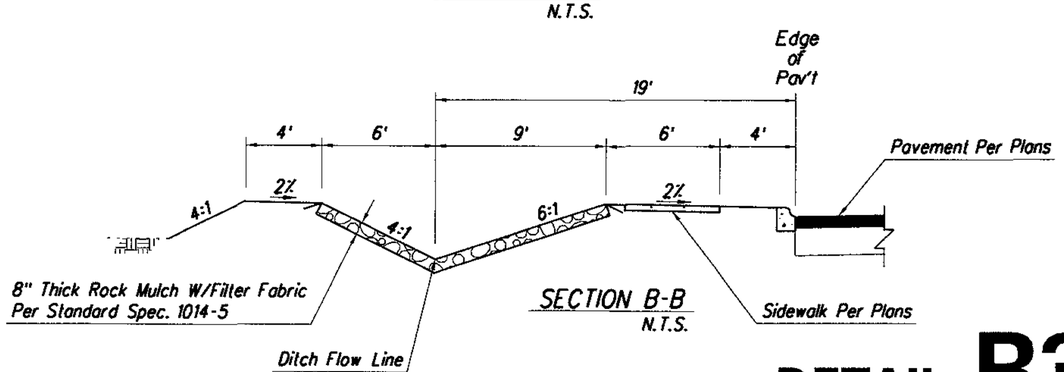

DETAIL R30

DITCH / SIDEWALK GRADING

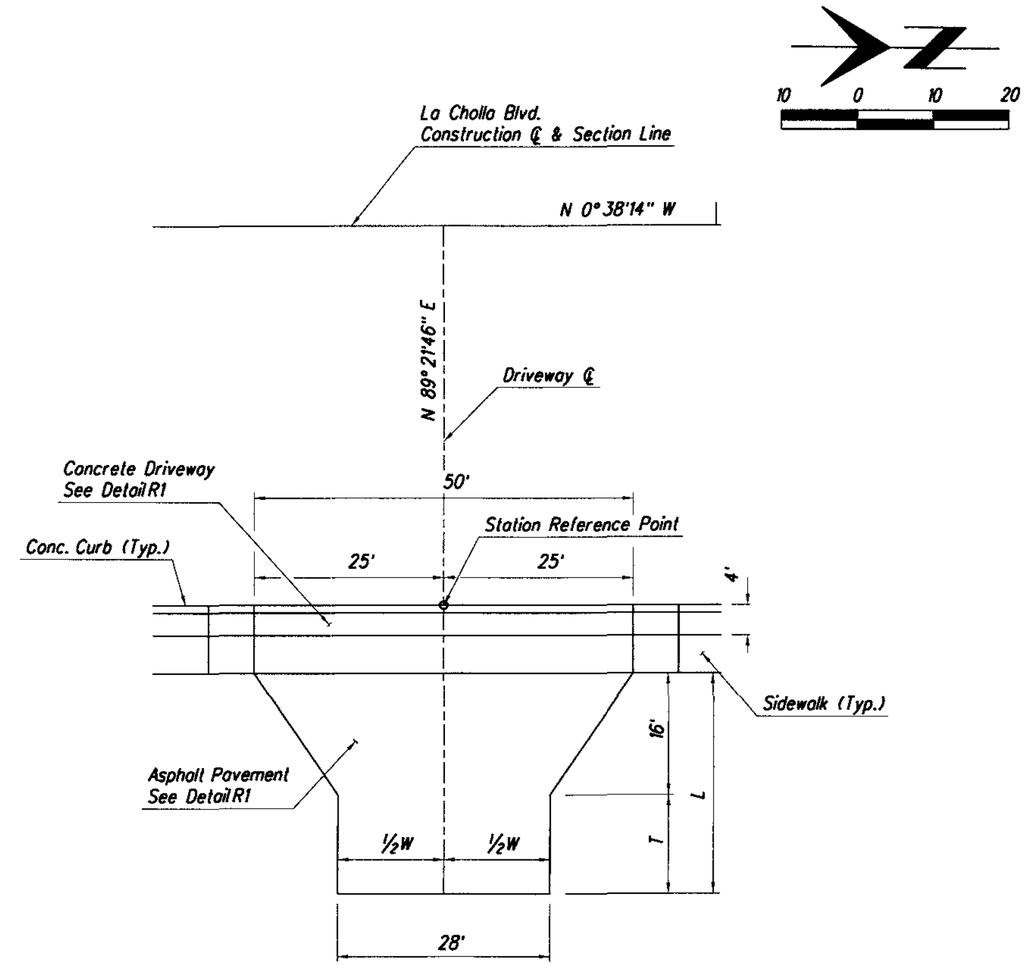

STATION REFERENCE POINT	OFFSET	W (Feet)	L (Feet)	T (Feet)
70+64.00	50' Rt.	28	29	13
72+96.00	50' Rt.	28	16	0

DETAIL R31

TRUCK DRIVEWAY

Arizona Blue Stake
1-800-STAKE-IT
1-800-782-5348
Call Two Working Days Before You Dig

Pima County Department of Transportation
Priscilla S. Cornelio, P.E., Director

No.	Revision Description	Engineer	Date

		Date
Designed	L. Barela	July/2009
Drawn	J. Cruz	July/2009
Checked	R. Brittain	July/2009
Proj. Engr.	L. Barela	Aug/2009

Registered Professional Engineer (Civil) 37287 L. BARELA Date Signed 8-24-09 ARIZONA, U.S.A.
Expires 03-31-2011

HDR Engineering, Inc.
5210 East Williams Circle, Suite 530
Tucson, AZ 85711-4459
(520) 584-3600

LA CHOLLA BLVD.
RUTHRAUFF RD. TO RIVER RD.
DITCH / SIDEWALK & TRUCK DRIVEWAY
DETAILS R30 & R31

Scales	Horiz. 1"=10' Vert. 1" = N/A	Sheet RD26 of RD33	Page 72 of 356

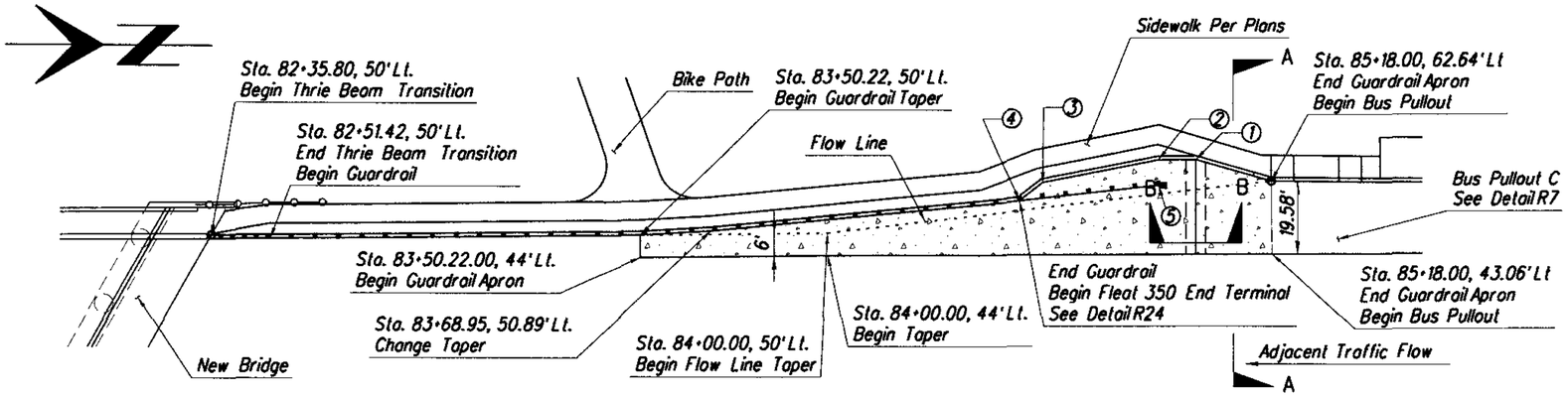

GUARDRAIL APRON B DETAIL

N.T.S.

NOTES

1. The PCCP surfaces within the guardrail apron area shall be textured transversly. Surface texturing to conform to the 2008 ADOT Std. Spec. 401.
2. Transverse weakened-plane joints shall be constructed at a maximum spacing of 15' and shall align with joints in the concrete curb.
3. For ½" expansion joint with preformed joint fillers. See Joint Detail this sheet.
4. See Staking Plans for additional grading information. The actual paving pour plan with joint locations shall be based upon the project paving plan submitted by the contractor and approved by the Engineer in accordance with subsection 401-7.01 of the 2008 ADOT Standard Specifications. Joint layout shall follow ADOT Std. C-07.04.

STREET NAME	GURADRAIL APRON	PCCP (S.Y.)	①		②		③		④		⑤		COMMENTS
			STATION	OFFSET	STATION	OFFSET	STATION	OFFSET	STATION	OFFSET	STATION	OFFSET	
La Cholla Blvd.	A	420	76+42.00	70.00' Rt.	76+52.00	70.00' Rt.	76+82.61	64.48' Rt.	76+88.70	59.75' Rt.	76+51.34	63.02' Rt.	See Detail R7 & Sheet SP5
	B	276	84+98.00	68.70' Lt.	84+88.00	68.70' Lt.	84+57.30	62.96' Lt.	84+51.10	58.00' Lt.	84+88.40	61.84' Lt.	See Sheet SP6
	TOTAL	696											

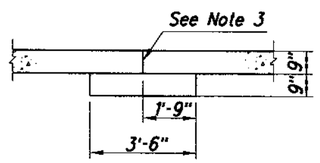

SECTION B-B

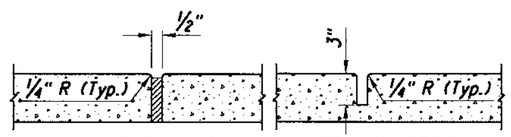

JOINT DETAIL

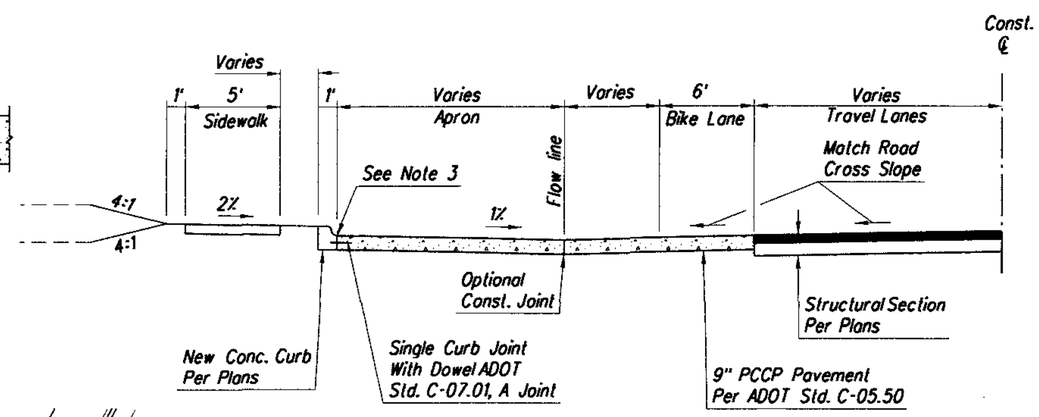

SECTION A-A

N.T.S.

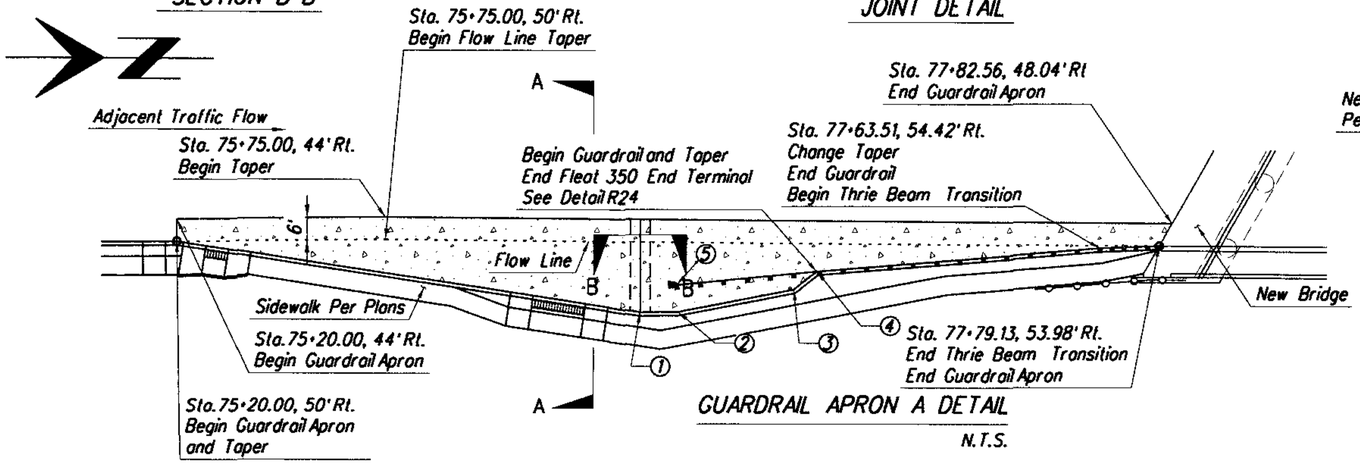

GUARDRAIL APRON A DETAIL

N.T.S.

DETAIL R32

GUARDRAIL APRON

Arizona Blue Stake
1-800-STAKE-IT
1-800-782-5348
Call Two Working Days Before You Dig

Scales	Horiz. N/A Vert. N/A	Sheet RD27 of RD33	Page 73 of 356

Pima County Department of Transportation

Priscilla S. Cornelio, P.E., Director

No.	Revision Description	Engineer	Date

		Date
Designed	L. Barela	July/2009
Drawn	D. Wostenberg	July/2009
Checked	R. Britton	July/2009
Proj. Engr.	L. Barela	Aug/2009

Registered Professional Engineer (Civil) Lee A. Barela 37267 Arizona, U.S.A. Signature Date 8-21-09 Expires 03-31-2011

HDR Engineering, Inc.
5210 East Williams Circle, Suite 530
Tucson, AZ 85711-4459
(520) 584-3600

LA CHOLLA BLVD.
RUTHRAUFF RD. TO RIVER RD.
GUARDRAIL APRON
DETAIL R32

012145
00000000005914
Pima_County_Dept_of_Transportation\PCDOT-La_Cholla_Blvd-Ruthrauff\13.00_CAD\Construction_Documents\Civil\17C 27.dgn

08\20\09 4:50:25 PM aledesma

Project • 4LCITR

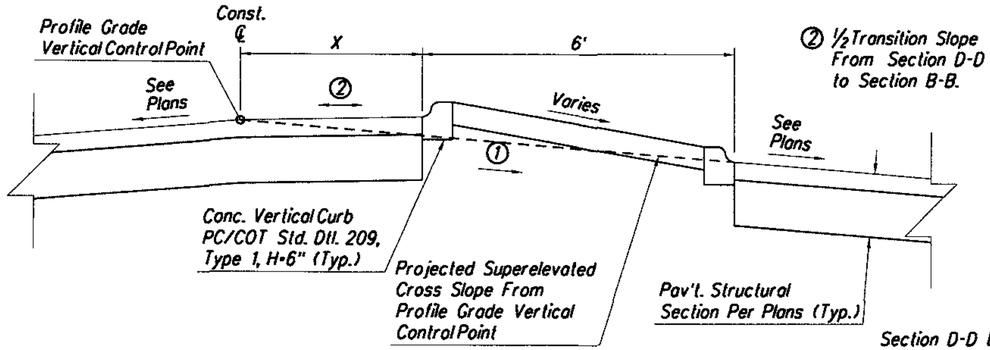

SECTION C-C
N.T.S.

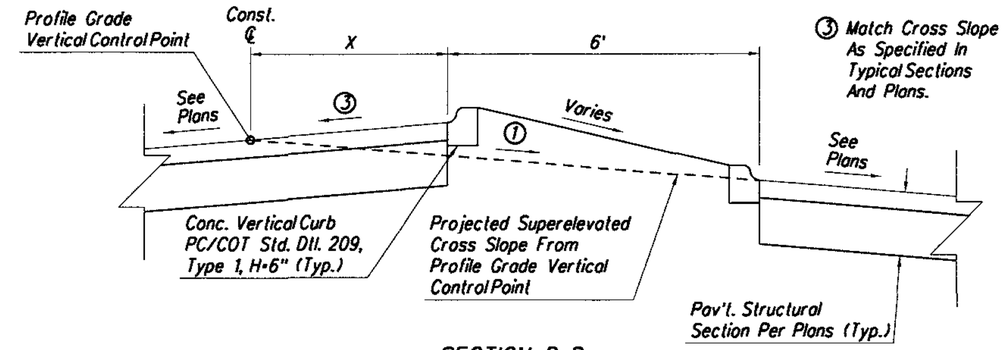

SECTION D-D
N.T.S.

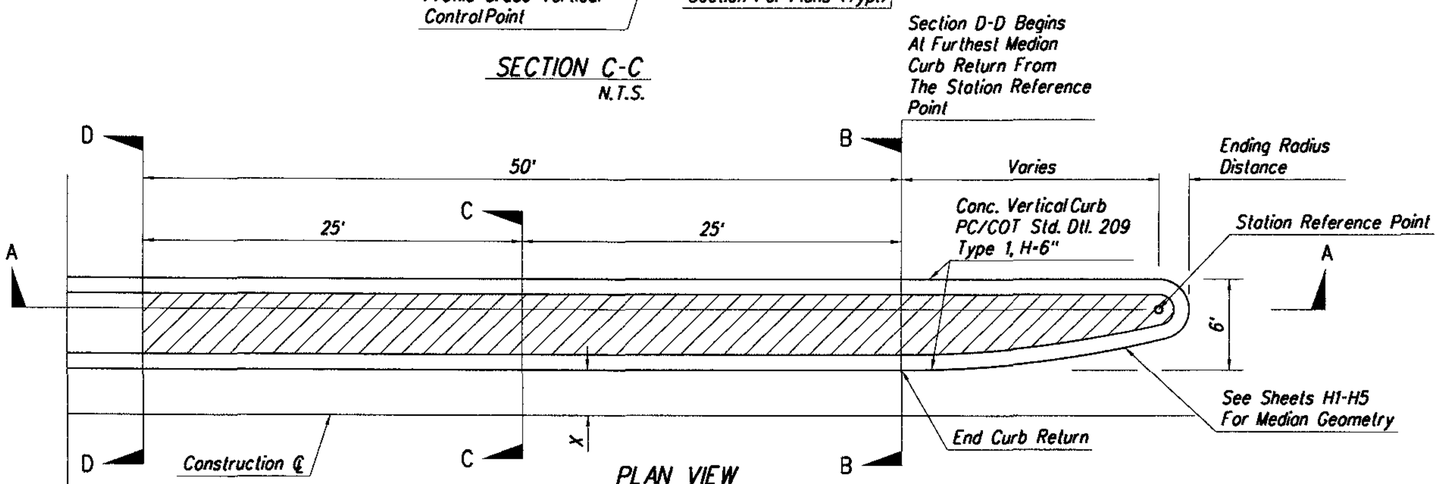

PLAN VIEW

STREET NAME	MEDIAN CROSS WALK NAME	STATION REFERENCE POINT	OFFSET	X
La Cholla Blvd.	C	Sta. 62+00.00	7' Rt.	4'
	H	Sta. 55+50.00	7' Lt.	3'
	I	Sta. 70+18.04	7' Lt.	4'
	J	Sta. 71+03.96	7' Rt.	4'

Notes:
See Staking Plans Sheet SP 9 for grading information at uneven median locations: H, I, And J.

See PC/COT Std. Dtl. 214 for Information Not Shown.

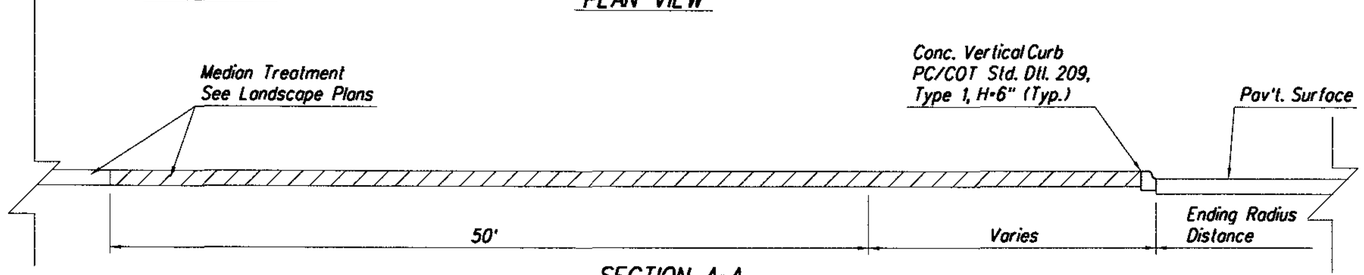

SECTION A-A

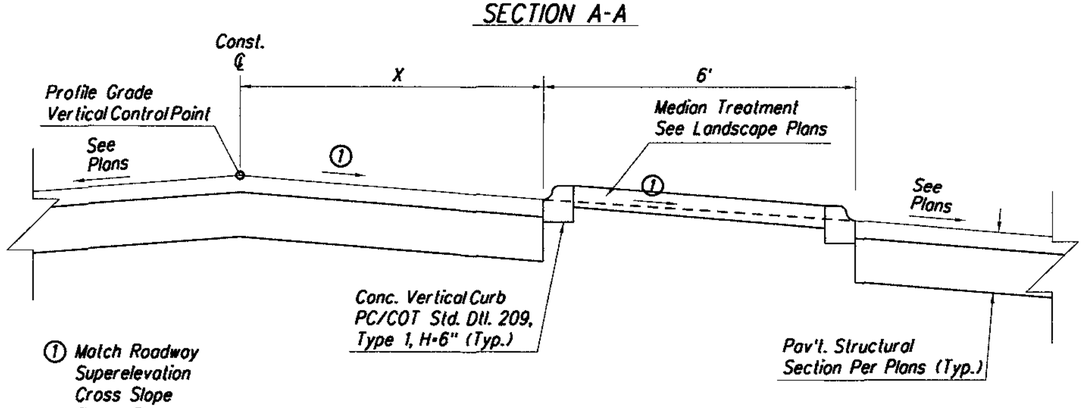

SECTION B-B
N.T.S.

DETAIL R33

CURBED MEDIAN NOSE

Arizona Blue Stake
1-800-STAKE-IT
1-800-782-5348
Call Two Working Days Before You Dig

Scales	Horiz. 1"=5' / N/A	Sheet RD28 of RD33	Page 74 of 356

Pima County Department of Transportation

Priscilla S. Cornelio, P.E., Director

No.	Revision Description	Engineer	Date

		Date
Designed	L. Barela	July/2009
Drawn	J. Cruz	July/2009
Checked	R. Britton	July/2009
Proj. Engr.	L. Barela	Aug/2009

Expires 03-31-2011

HDR Engineering, Inc.
5210 East Williams Circle, Suite 530
Tucson, AZ 85711-4459
(520) 594-3600

LA CHOLLA BLVD.
RUTHRAUFF RD. TO RIVER RD.
CURBED MEDIAN NOSE
DETAIL R33

012145
000020000005994
Pima_County_Dept._of_Transportation\PCDOT-La_Cholla_Blvd-Ruthrauff\13.00_CAD\Construction_Documents\Civil\TC 28.dgn

08\20\09 4:50:31 PM aledesma

Project # 4LCITR

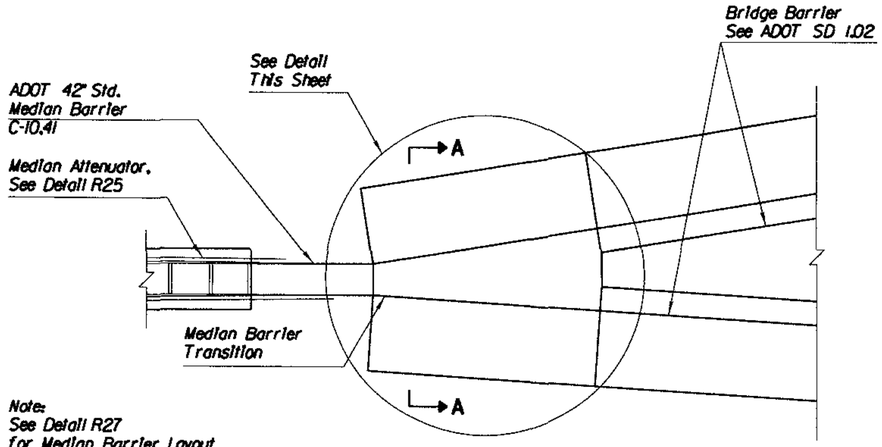

Note:
See Detail R27
for Median Barrier Layout

PLAN VIEW
NTS

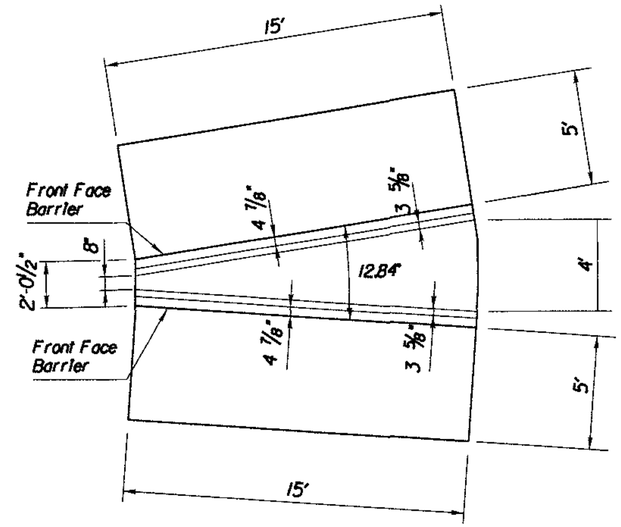

DETAIL
NTS

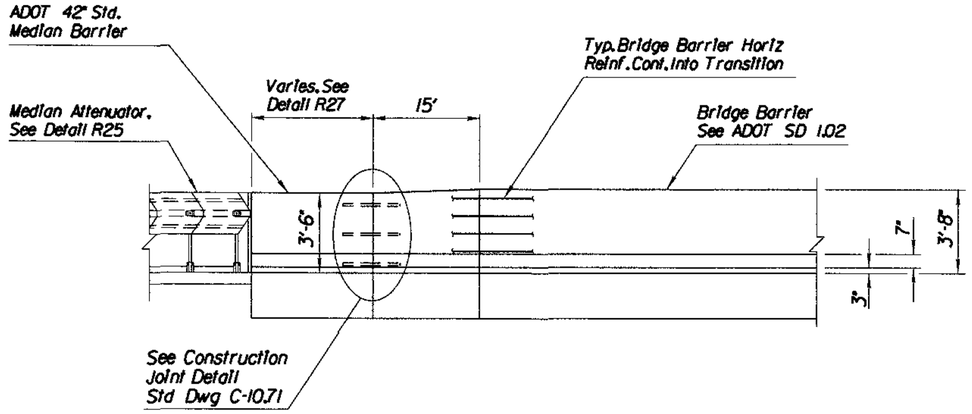

ELEVATION
NTS

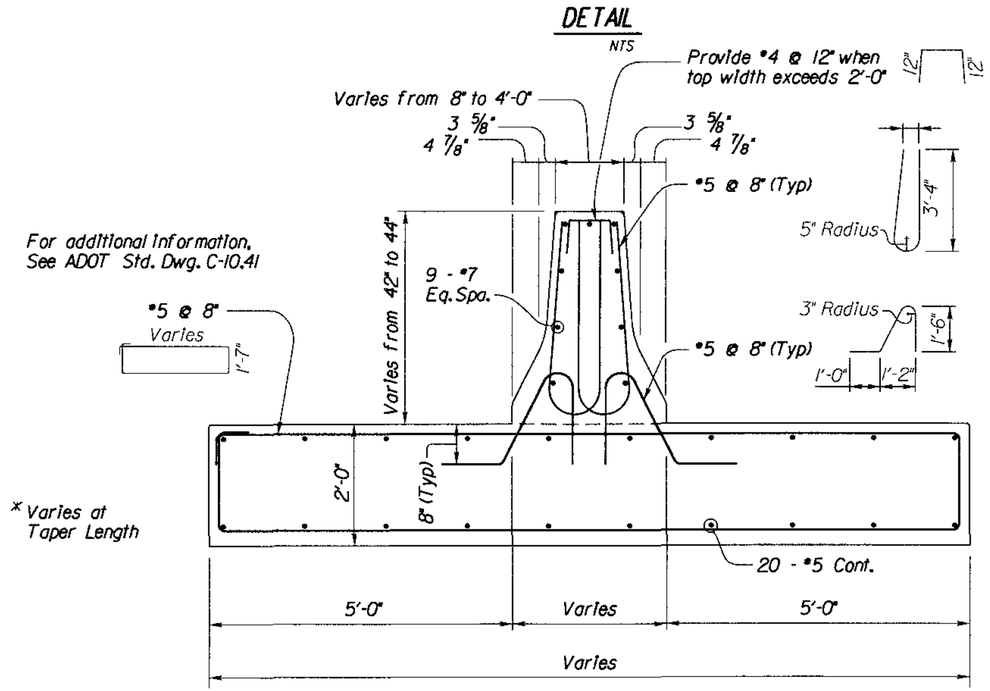

SECTION A-A
NTS

Note:

This Barrier Junction Transition shall
be paid for under Bid Item No. 9100143.

DETAIL R34

BARRIER JUNCTION TRANSITION

No.	Revision Description	Engineer	Date

		Date
Designed	L. Barela, T. Buell	July/2009
Drawn	T. King	July/2009
Checked	R. Britain	July/2009
Proj. Engr.	L. Barela	Aug/2009

Priscilla S. Cornelio, P.E., Director

Pima County Department of Transportation

LA CHOLLA BLVD.
RUTHRAUFF RD. TO RIVER RD.
ROADWAY DETAILS
BARRIER JUNCTION TRANSITION
DETAIL R34

HDR Engineering, Inc.
5210 East Williams Circle, Suite 530
Tucson, AZ 85711-4459
(520) 584-3600

Expires 03-31-2011

Scales		Sheet RD29 of RD33	Page 75 of 356

012145
00000000003914
Pima_County_Dept_of_Transportation\PCDOT-La_Cholla_Blvd-Ruthrauff\13.00_CAD\Construction_Documents\Civil\17C-29.dgn

08\20\09 4:50:35 PM aledesma

Project # 4LCITR

① Access Ramp Control Point. See Plans For Location.

② Detectable Warning Strip 6' x 2' See Sht. 2 Of 2.

③ Rough Broom Finish. Use Ripple Pattern.

④ See Plans For Radius.

⑤ If B.C.R. or E.C.R. Lies Within Ramp Limits, Then Treat Linear Portion As Type 2 Shown On This Sheet.

⑥ Install Ramp Curb Unless Otherwise Specified On The Plans.

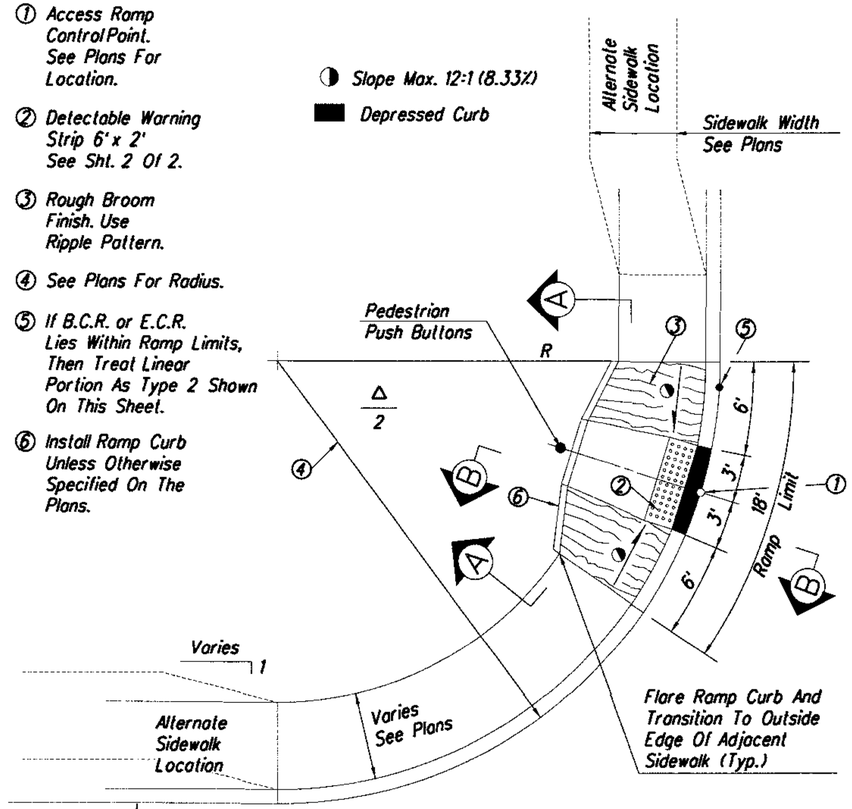

TYPE 1 PLAN
NTS

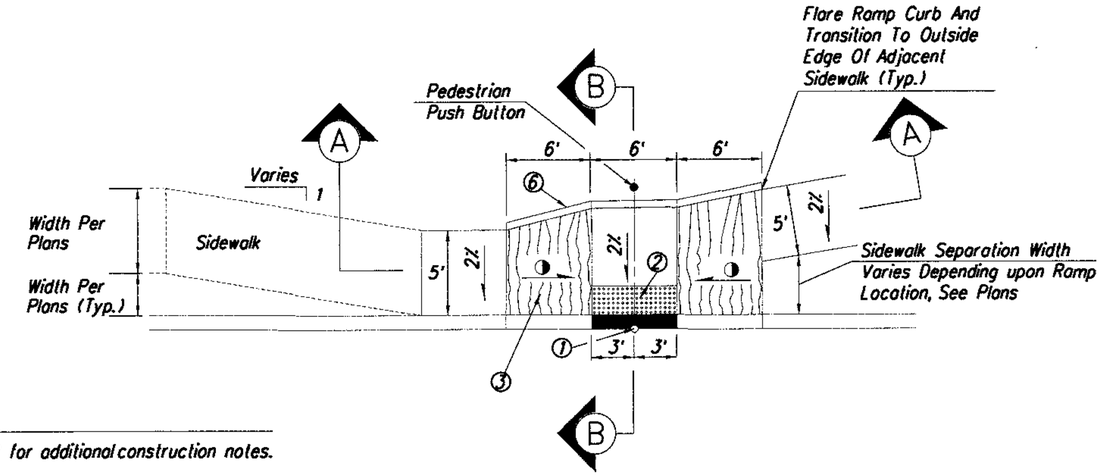

TYPE 2 PLAN
NTS

General Notes:

1. See sheet 2 of 2 for additional construction notes.
2. Pedestrian push button pole. See Traffic Signal Plans.
3. See Std. Detail 200 for joint requirements.
4. Ramp joints along returns shall be radial from the back of curb or back of detectable warning strip.
5. All concrete is Class B concrete.
6. Curb measurements are along face of curb.
7. These Curb Access Ramps shall be paid for under the following Bid Item Numbers:
   Type 1: Item No. 9080280
   Type 2: Item No. 9080281
   Type 3: Item No. 9080282

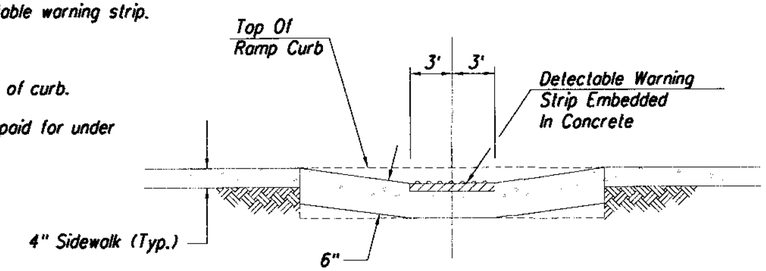

A SECTION
NTS

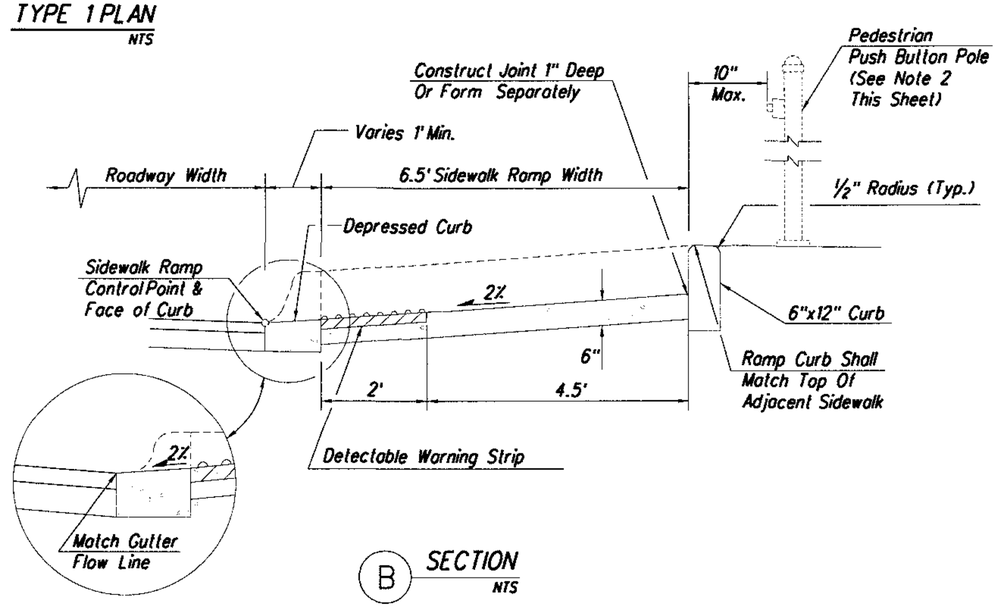

B SECTION
NTS

DEPRESSED CURB DETAIL
NTS

DETAIL R35

SHEET 1 OF 2
CURB ACCESS RAMP

Arizona Blue Stake
1-800-STAKE-IT
1-800-782-5348
Call two Working Days Before You Dig

Scales	N/A / N/A	Sheet RD30 of RD33	Page 76 of 356

Pima County Department of Transportation

Priscilla S. Cornelio, P.E., Director

No.	Revision	Date	Engineer

		Date
Designed	L. Barela	July/2009
Drawn	S. Cruz	July/2009
Checked	R. Britton	July/2009
Proj. Engr.	L. Barela	Aug/2009

Expires 03-31-2011

HDR Engineering, Inc.
5210 East Williams Circle, Suite 530
Tucson, AZ 85711-4459
(520) 584-3600

LA CHOLLA BLVD.
RUTHRAUFF RD. TO RIVER RD.
CURB ACCESS RAMP
DETAIL R35

012145
0000000005914
Pima_County_Dept_of_Transportation\PCDOT-La_Cholla_Blvd-Ruthrauff\13.00_CAD\Construction_Documents\Civil\17C_30.dgn

08\20\09 4:50:39 PM dledesma

Project # 4LCITR

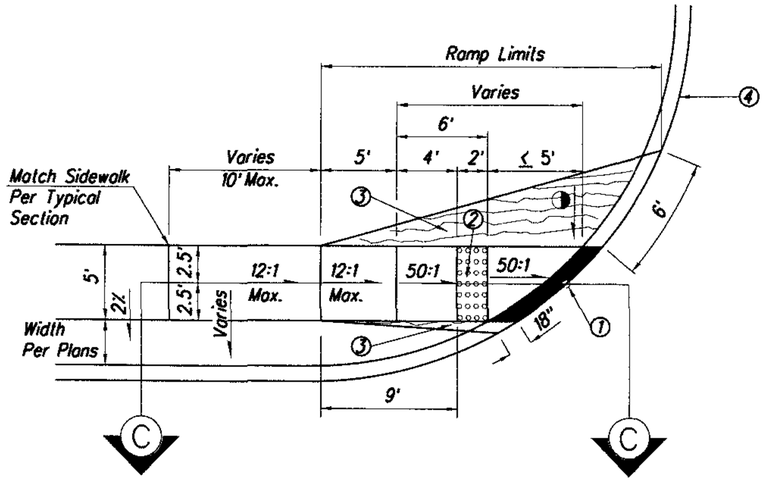

TYPE 3 PLAN
NTS

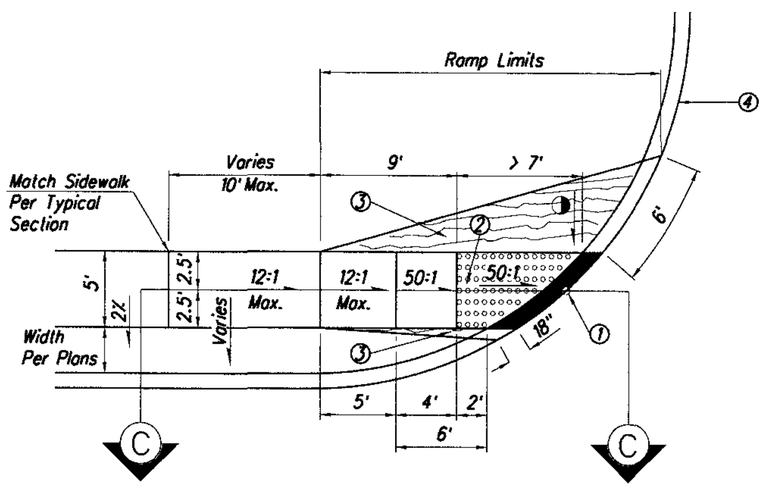

TYPE 3 PLAN
NTS

① Access Ramp Control Point. See Plans For Location.

② Detectable Warning Strip See Notes This Sheet

③ Rough Broom Finish. Use Ripple Pattern.

④ See Plans For Radius.

◑ Slope Max. 12:1 (8.33%)

■ Depressed Curb

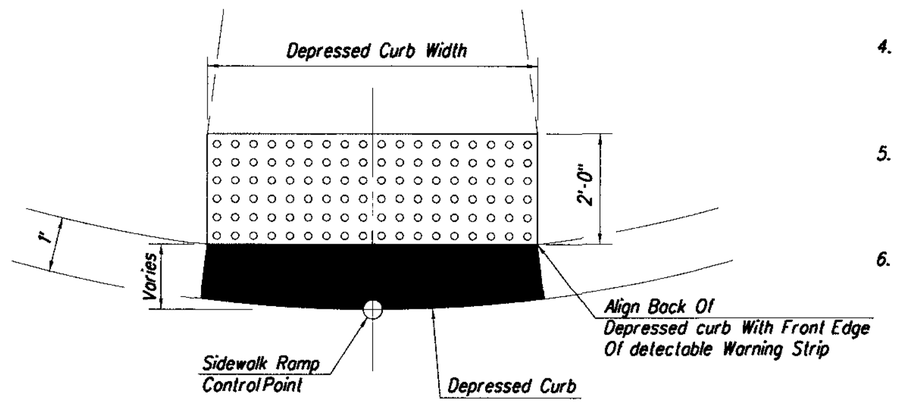

DETECTABLE WARNING STRIP PLAN
NTS

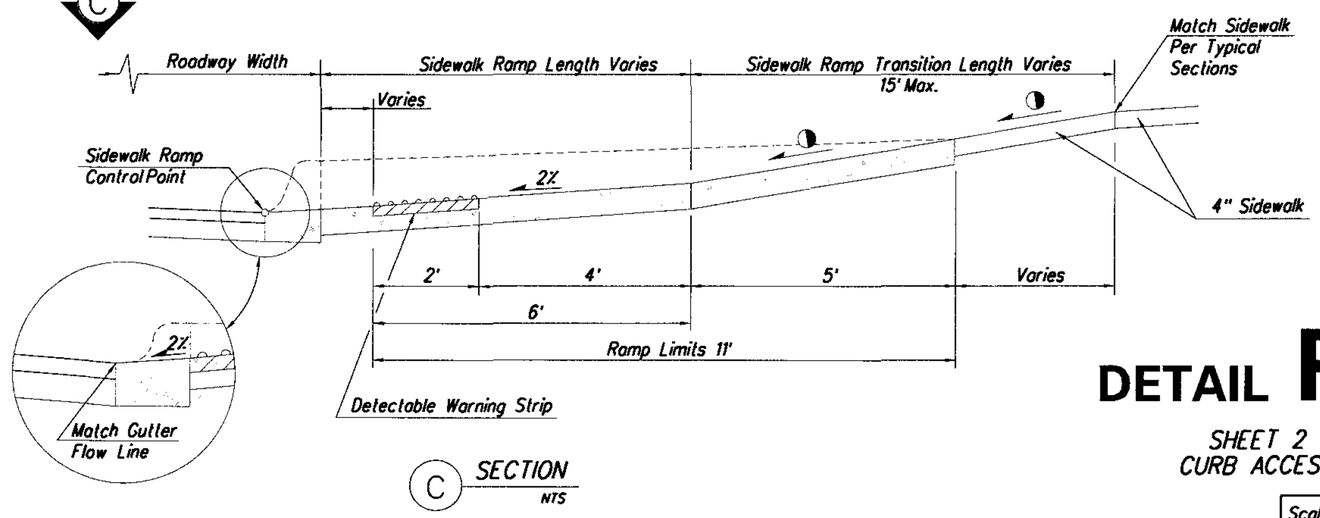

C SECTION
NTS

Notes for Detectable Warning Surface:

1. General Information: Detectable warnings shall consist of a surface of truncated domes aligned in a square or radial grid pattern in the direction of travel, and shall comply with R304 of The Draft Public Rights-Of-Way Accessibility Guide Lines.

2. Dome Size: Truncated domes in a detectable warning surface shall have a base diameter of 0.9 in. minimum to 1.4 in. maximum, a top diameter of 50 percent of the base diameter minimum to 65 percent of the base diameter maximum, and a height of 0.2 in.

3. Dome Spacing: Truncated domes in a detectable warning surface shall have a center-to-center spacing of 1.6 in. minimum and 2.4 in. maximum and a base-to-base spacing of 0.65 in. minimum measured between the most adjacent domes.

4. Color Contrast: Detectable warning surfaces shall contrast visually with adjacent gutter, street or highway, or walkway surface, either rights-of-way or base-to-base.

5. Size: Detectable warning surfaces shall extend 24 in. minimum in the direction of travel and the full width of the curb ramp (exclusive of flares), the landing, or the blended transition.

6. No other point of the leading edge of the detectable warning may be more than 5 feet from the back of curb.

DETAIL R35

SHEET 2 OF 2
CURB ACCESS RAMP

Arizona Blue Stake
1-800-STAKE-IT
1-800-782-5348
Call Two Working Days Before You Dig

Scales N/A N/A | Sheet RD31 of RD33 | Page 77 of 356

Pima County Department of Transportation

LA CHOLLA BLVD.
RUTHRAUFF RD. TO RIVER RD.
CURB ACCESS RAMP
DETAIL R35

HDR Engineering, Inc.
6210 East Williams Circle, Suite 530
Tucson, AZ 85711-4459
(520) 584-3600

Expires 03-31-2011

No.	Revision Description	Engineer	Date

		Date
Designed	L. Barela	July/2009
Drawn	J. Cruz	July/2009
Checked	R. Britain	July/2009
Proj. Engr.	L. Barela	Aug/2009

Priscilla S. Cornelio, P.E., Director

012145
00000000005914
Pima_County_Dept_of_Transportation\PCDOT-La_Cholla_Blvd-Ruthrauff\13.00_CAD\Construction_Documents\Civil\17C_31.dgn

08\20\09 4:50:44 PM aledesma

Project • 4LCITR

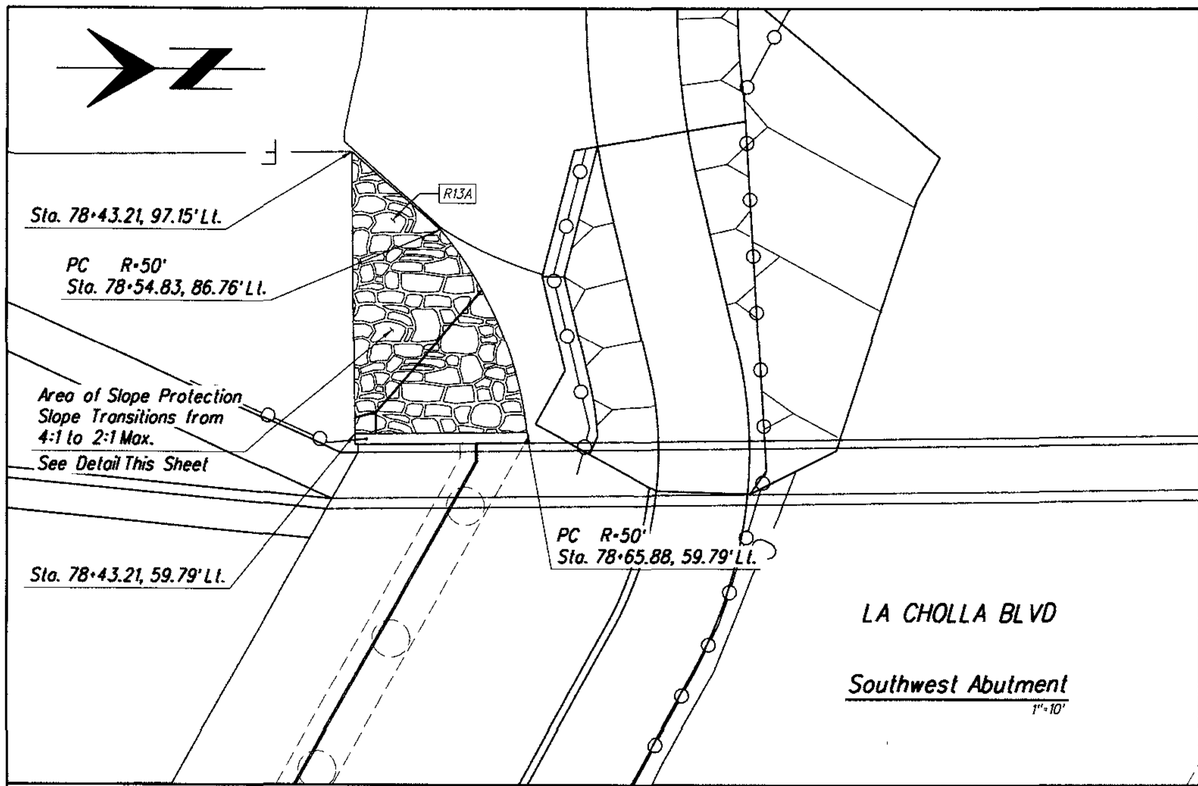

Southwest Abutment
1"=10'

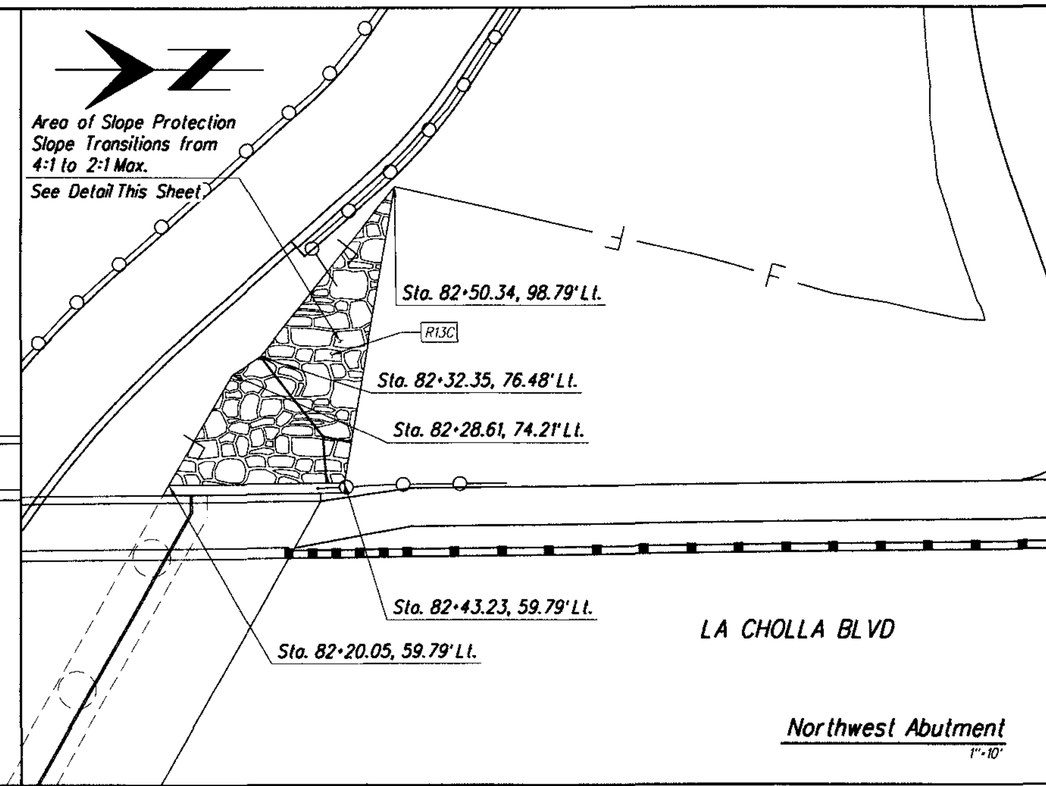

Northwest Abutment
1"=10'

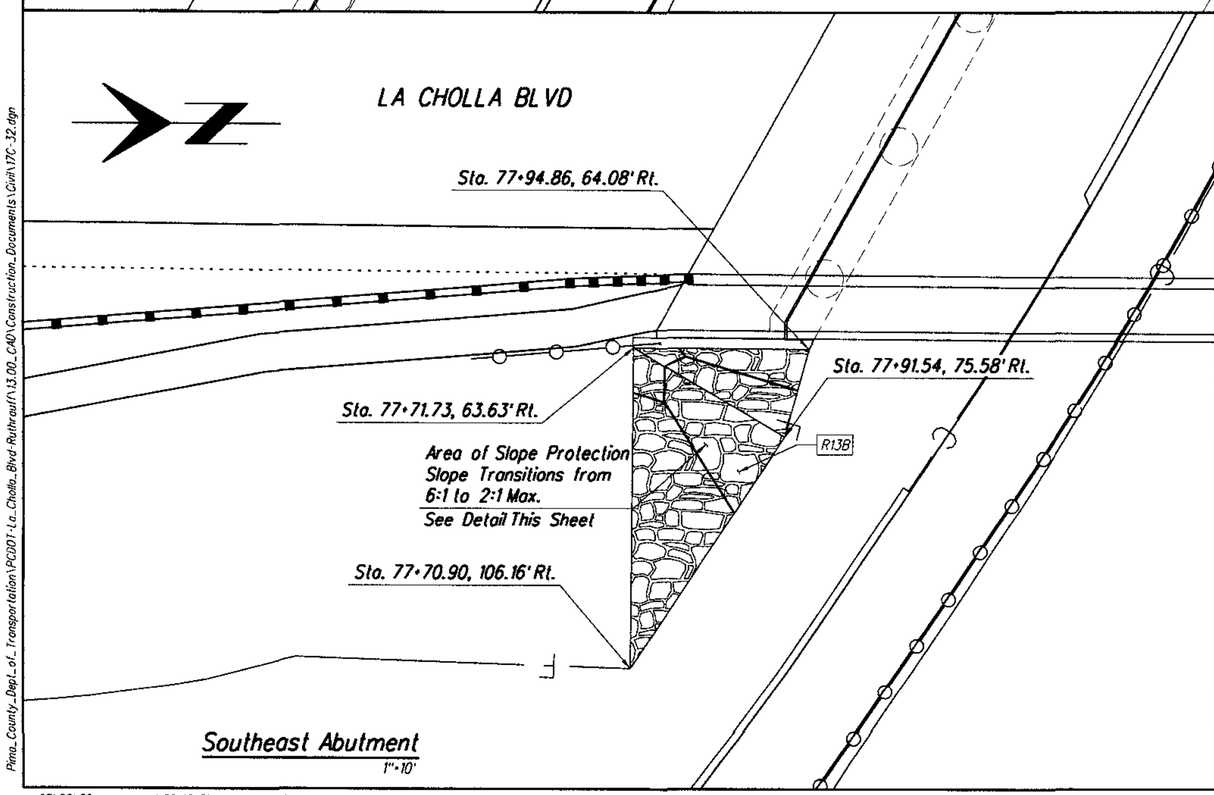

Southeast Abutment
1"=10'

Item No.	Qty.	Unit	Description
R13	62	C.Y.	Riprap Hand Placed
A	22	C.Y.	Lt.-Sta. 78+43.21, 97.15' Lt. to Sta. 78+65.88, 59.79' Lt.
B	21	C.Y.	Rt.-Sta. 77+70.90, 106.16' Rt. to Sta. 77+94.86, 64.08' Rt.
C	19	C.Y.	Lt.-Sta. 82+20.05, 59.79' Lt. to Sta. 82+50.34, 98.79' Lt.

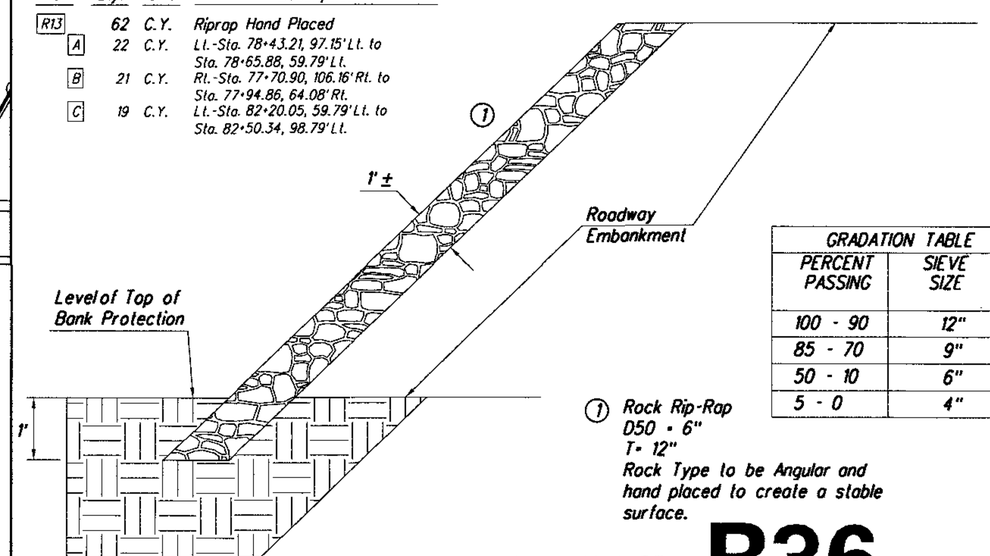

GRADATION TABLE	
PERCENT PASSING	SIEVE SIZE
100 - 90	12"
85 - 70	9"
50 - 10	6"
5 - 0	4"

1 Rock Rip-Rap
D50 = 6"
T= 12"
Rock Type to be Angular and hand placed to create a stable surface.

DETAIL R36

ABUTMENT SLOPE PROTECTION

Arizona Blue Stake
1-800-STAKE-IT
1-800-782-5348
Call Two Working Days Before You Dig

Scales: Horiz. 1"=10'; N/A | Sheet RD32 of RD33 | Page 78 of 356

Priscilla S. Cornelio, P.E., Director

No.	Revision Description	Engineer	Date

		Date
Designed	J. Hatch	July/2009
Drawn	D. Wastenberg	July/2009
Checked	R. Brillum	July/2009
Proj. Engr.	J. Hatch	Aug/2009

Registered Professional Engineer (Civil) CERTIFICATE NO. 9364 JOSEPH A. HATCH STATE OF ARIZONA
Expires 03-31-2012

HDR Engineering, Inc.
5210 East Williams Circle, Suite 530
Tucson, AZ 85711-4459
(520) 584-3600

Pima County Department of Transportation

LA CHOLLA BL VD.
RUTHRAUFF RD. TO RIVER RD.
ABUTMENT SLOPE PROTECTION
DETAIL R36

012145
00000000005914
Pima_County_Dept_of_Transportation\PC001-La_Cholla_Blvd-Ruthrauff\13.00_CAD\Construction_Documents\Civil\17C-32.dgn

08\20\09 4:50:49 PM aledesma

Project • 4LCITR

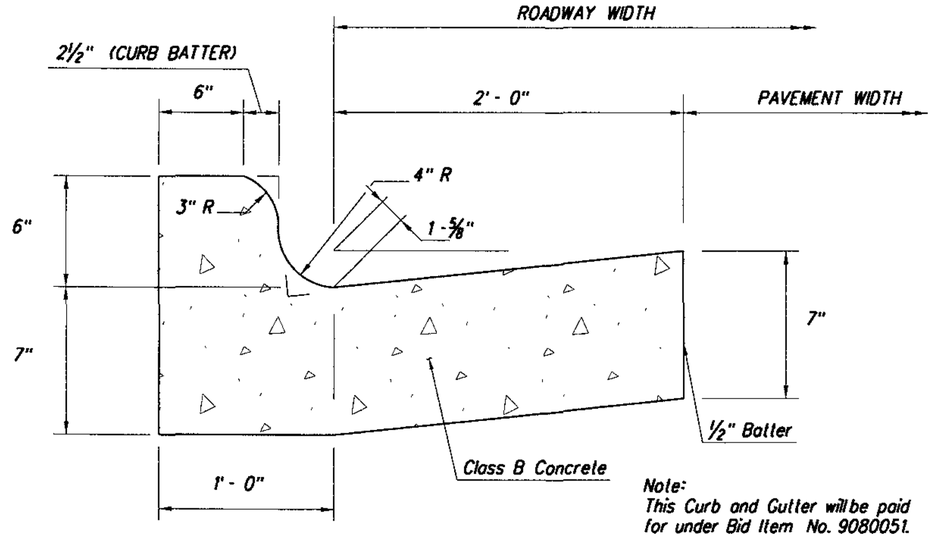

Note:
This Curb and Gutter will be paid for under Bid Item No. 9080051.

See PC/COT Std. Dtl. 209 for information not shown.

CONCRETE VERTICAL CURB AND GUTTER

N.T.S.

DETAIL R37

CURB & GUTTER

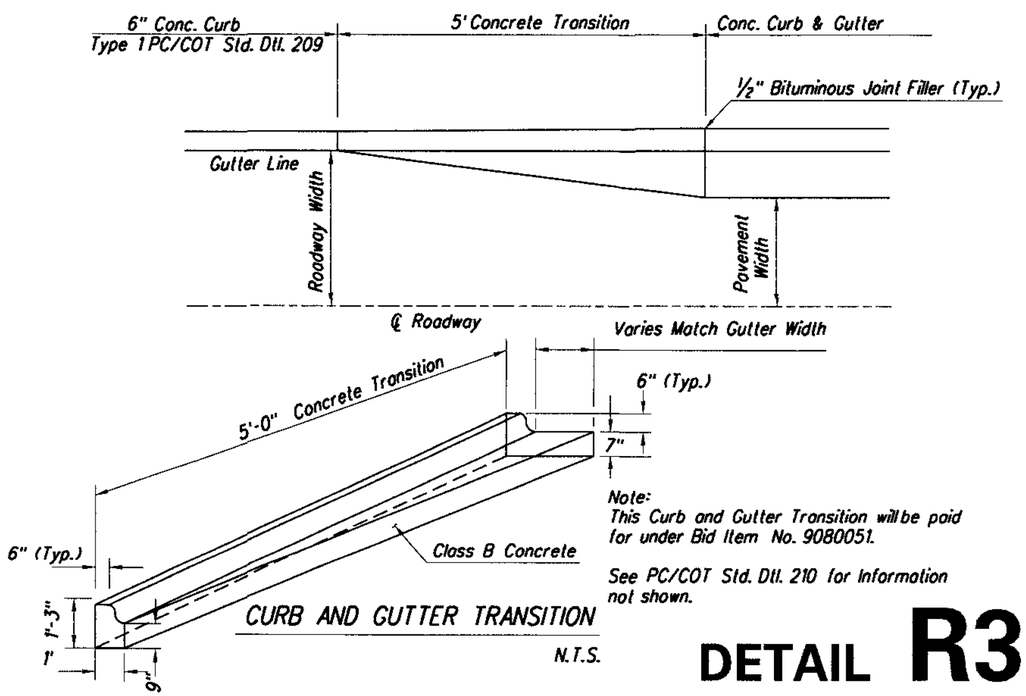

Note:
This Curb and Gutter Transition will be paid for under Bid Item No. 9080051.

See PC/COT Std. Dtl. 210 for information not shown.

CURB AND GUTTER TRANSITION

N.T.S.

DETAIL R38

CURB & GUTTER TRANSITION

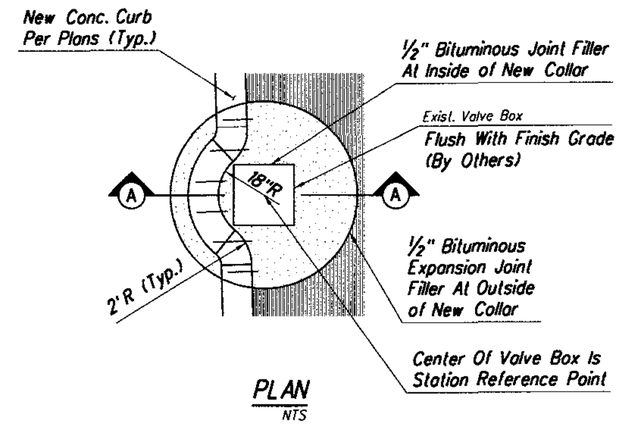

PLAN

NTS

Ruthrauff Rd. Sta. 101+35.59, 59.39' Lt. Southwest Gas

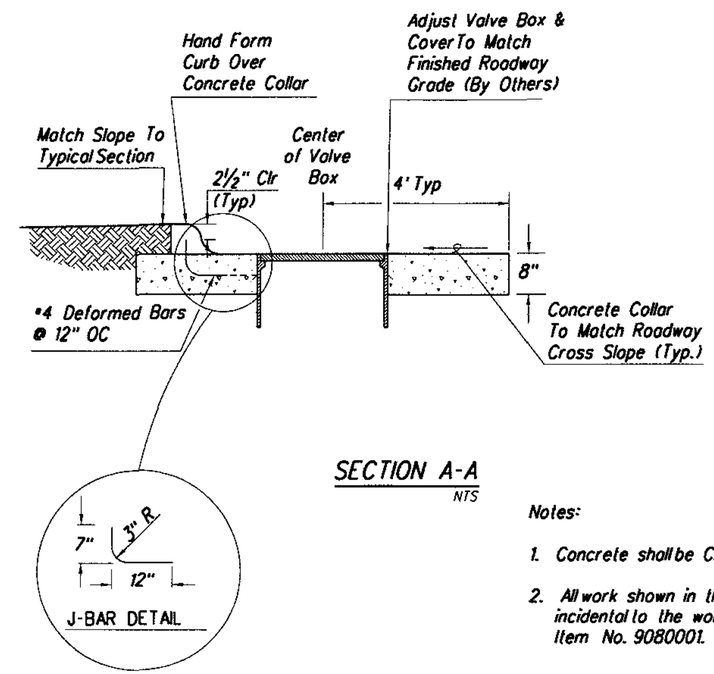

SECTION A-A

NTS

Notes:

1. Concrete shall be Class B.
2. All work shown in this detail will be incidental to the work paid under Bid Item No. 9080001.

DETAIL R39

VALVE/CURB CONFLICT

Arizona Blue Stake
1-800-STAKE-IT
1-800-782-5348
Call Two Working Days Before You Dig

No.	Revision Description	Engineer	Date

		Date
Designed	L. Barela	July/2009
Drawn	D. Wostenberg	July/2009
Checked	R. Brillon	July/2009
Proj. Engr.	L. Barela	Aug/2009

Priscilla S. Cornelio, P.E., Director

Pima County Department of Transportation

LA CHOLLA BLVD.
RUTHRAUFF RD. TO RIVER RD.
ROADWAY DETAILS
DETAILS R37 TO R39

HDR Engineering, Inc.
5210 East Williams Circle, Suite 530
Tucson, AZ 85711-4459
(520) 584-3600

Expires 03-31-2011

Scales	Horiz. N/A Vert. N/A	Sheet RD33 of RD33	Page 79 of 356

012145
00000000005991 4
Pima_County_Dept_of_Transportation\PCDOT-La_Cholla_Blvd-Ruthrauff\13.00_CAD\Construction_Documents\Civil\17C-33.dgn

08\20\09 4:50:53 PM aledesma

Project • 4LCITR

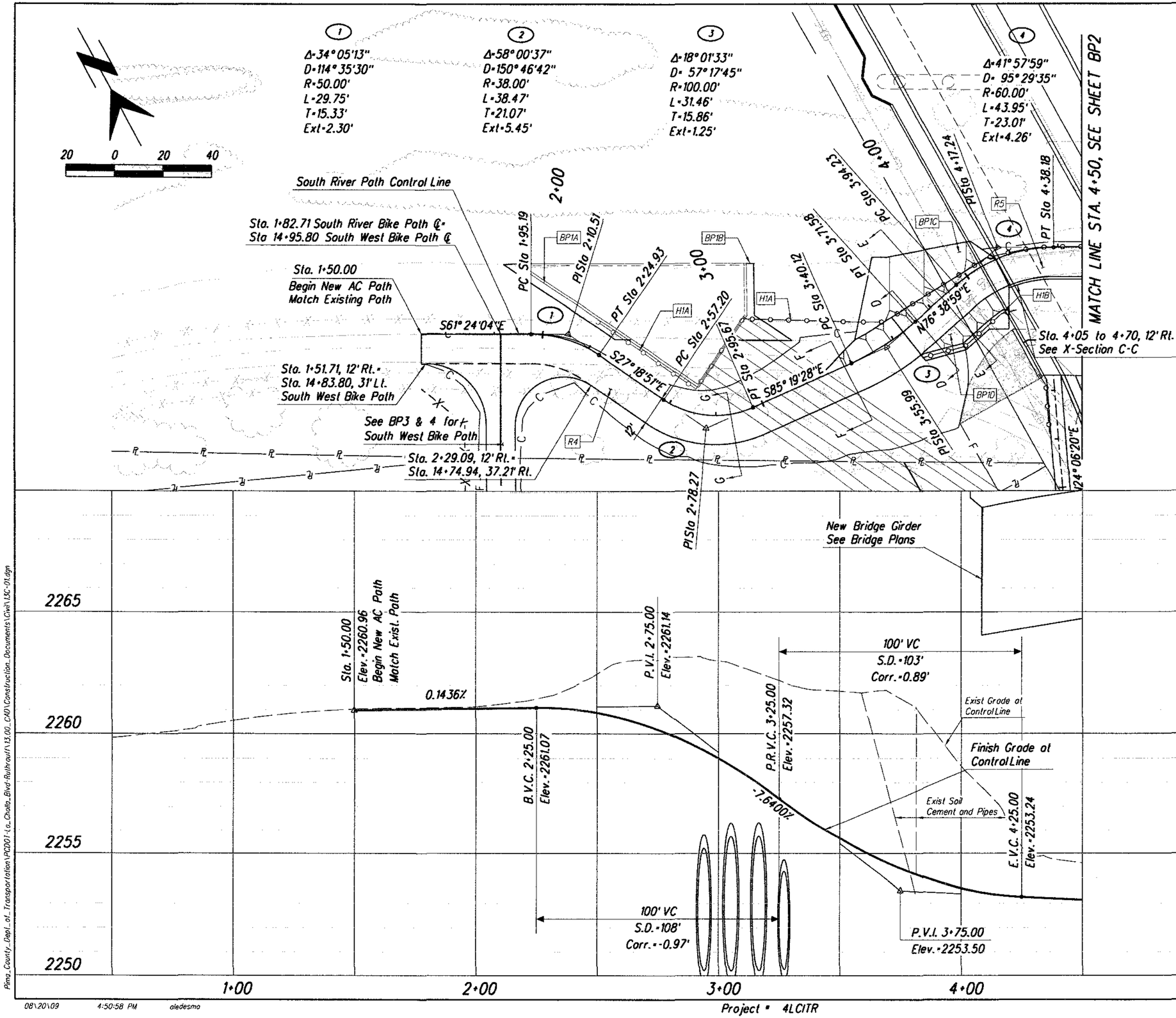

Item No.	Qty.	Unit	Description
R4	287	S.Y.	Sta. 1+50.00 to Sta. 3+65.00 Pav't. Struct. Sec. No. 4
R5	113	S.Y.	Sta. 3+25.00 to Sta. 4+50.00 Pav't. Struct. Sec. No. 5
BP1	167	C.Y.	Bank Protection (Soil Cement)
A	16	C.Y.	Sta. 1+83.78, 28.96' Lt. to Sta. 2+32.32, 12.65' Lt.
B	16	C.Y.	Sta. 2+98.08, 28.86' Lt. to Sta. 3+21.48, 18.35' Lt.
C	103	C.Y.	Sta. 3+25.00, 0' Lt. to Sta. 4+15.00, 0' Lt.
D	32	C.Y.	Sta. 3+65.00, 12' Rt. to Sta. 4+15.00, 12' Rt.
R40	278	L.F.	Barricade Railing, PC/COT Std. Dtl. 105
A	233	L.F.	Sta. 2+15.00, 11.60' Lt. to Sta. 2+69.00, 9.67' Lt. to Sta. 3+06.70, 34.79' Lt. to Sta. 3+60.87, 8.10' Lt. to Sta. 4+10.54, 2.29' Lt. to Sta. 4+50.00, 0' Lt.
B	44	L.F.	Sta. 3+65.00, 13.58' Rt. to Sta. 3+79.63, 21.42' Rt. to Sta. 4+03.39, 20.96' Rt. to Sta. 4+12.92, 22.62' Rt.

Notes:
1. Cross Sections, See Sheets BP11 and BP12.

Arizona Blue Stake
1-800-STAKE-IT
1-800-782-5348
Call Two Working Days Before You Dig

Scales: Horiz. 1"=20' Vert. 1"=2'

Sheet BP1 of BP12

Page 80 of 356

Pima County Department of Transportation

Priscilla S. Cornelio, P.E., Director

No.	Revision Description	Engineer	Date

		Date
Designed	J. Hatch	July/2009
Drawn	J. Hatch, K. Evers	July/2009
Checked	R. Britton	July/2009
Proj. Engr.	J. Hatch	Aug/2009

Registered Professional Engineer (Civil) Certificate No. 9364 JOSEPH A. HATCH Arizona U.S.A. Expires 03-31-2012

HDR Engineering, Inc.
5210 East Williams Circle, Suite 530
Tucson, AZ 85711-4459
(520) 584-3600

LA CHOLLA BLVD.
RUTHRAUFF RD. TO RIVER RD.
RIVER PARK PATH
AND BANK PROTECTION

012145
00000000005994
Pima_County_Dept_of_Transportation\PC001-La_Cholla_Blvd-Ruthrauff\13.00_CAD\Construction_Documents\Civil\13C-01.dgn

08\20\09 4:50:58 PM aledesma

Project = 4LCITR

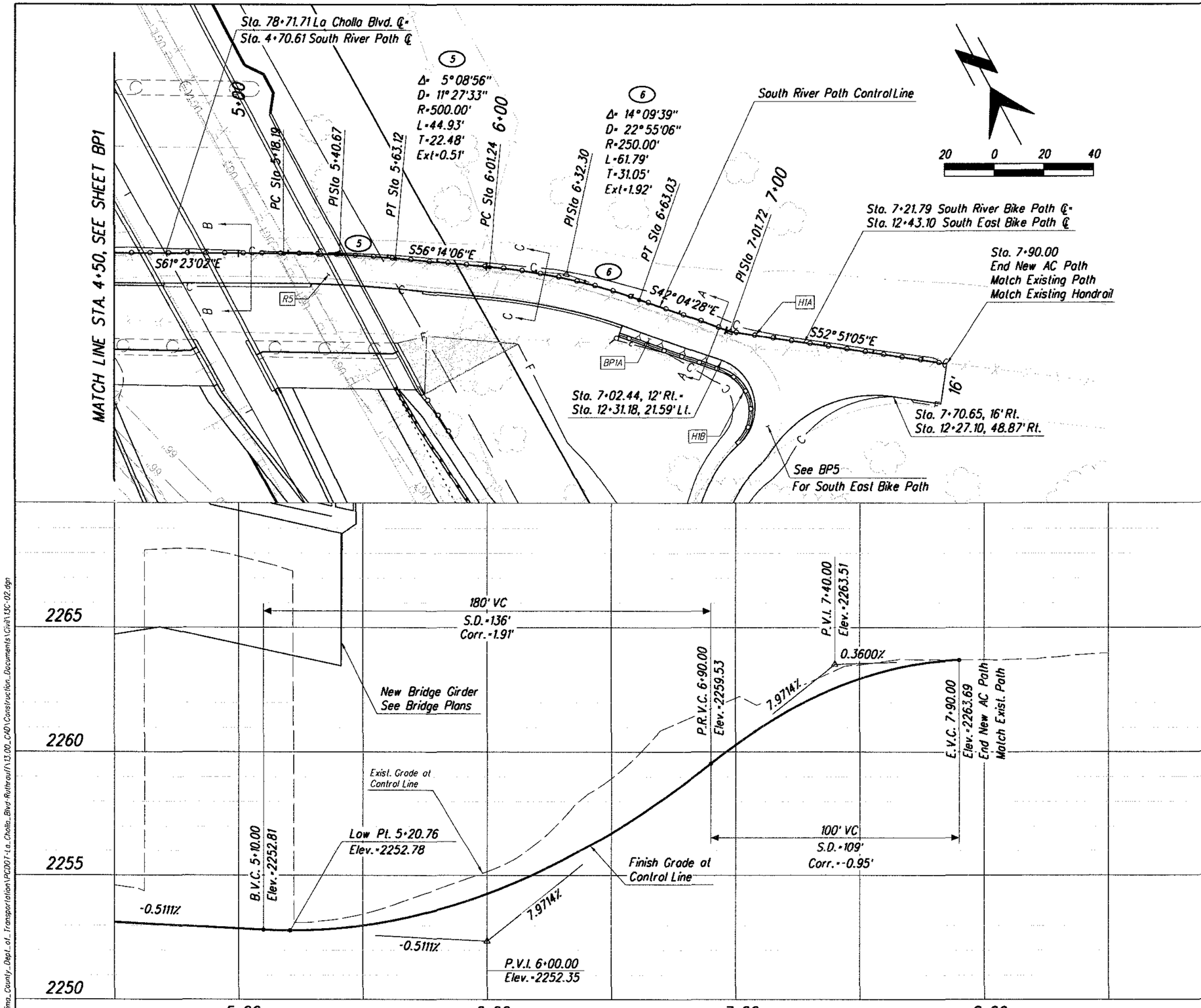

Item No.	Qty.	Unit	Description
R5	476	S.Y.	Pav't. Struct. Sec. No. 5
BP1	22	C.Y.	Bank Protection (Soil Cement)
A	22	C.Y.	Sta. 6+60.00, 12' Rt. to Sta. 11+93.64, 6' Lt.
R40	424	L.F.	Barricade Railing, PC/COT Std. Dtl. 105
A	340	L.F	Sta. 4+50.00, 0' Lt. to Sta. 7+90.00, 0' Lt.
B	84	L.F	Sta. 6+57.00, 20.50' Rt. to Sta. 11+95.89, 6.68' Lt.

Notes:
1. Cross Sections, See Sheets BP11 and BP12.

Arizona Blue Stake
1-800-STAKE-IT
1-800-782-5348
Call Two Working Days Before You Dig

Pima County Department of Transportation

Priscilla S. Cornelio, P.E., Director

No.	Revision Description	Engineer	Date

		Date
Designed	J. Hatch	July/2009
Drawn	J. Hatch, H. Evers	July/2009
Checked	R. Britton	July/2009
Proj. Engr.	J. Hatch	Aug/2009

REGISTERED PROFESSIONAL ENGINEER (CIVIL) CERTIFICATE NO. 9364 JOSEPH A. HATCH ARIZONA U.S.A.
Expires 03-31-2012

HDR Engineering, Inc.
5210 East Williams Circle, Suite 530
Tucson, AZ 85711-4459
(520) 584-3600

LA CHOLLA BLVD.
RUTHRAUFF RD. TO RIVER RD.
RIVER PARK PATH
AND BANK PROTECTION

Scales	Horiz. 1"=20' Vert. 1"=2'	Sheet	BP2 of BP12	Page	81 of 356

Project # 4LCITR

012145
00000000005991 4
Pima_County_Dept_of_Transportation\PCDOT-La_Cholla_Blvd-Ruthrauff\13.00_CAD\Construction_Documents\Civil\13C-02.dgn

08\20\09 4:51:03 PM cledesma

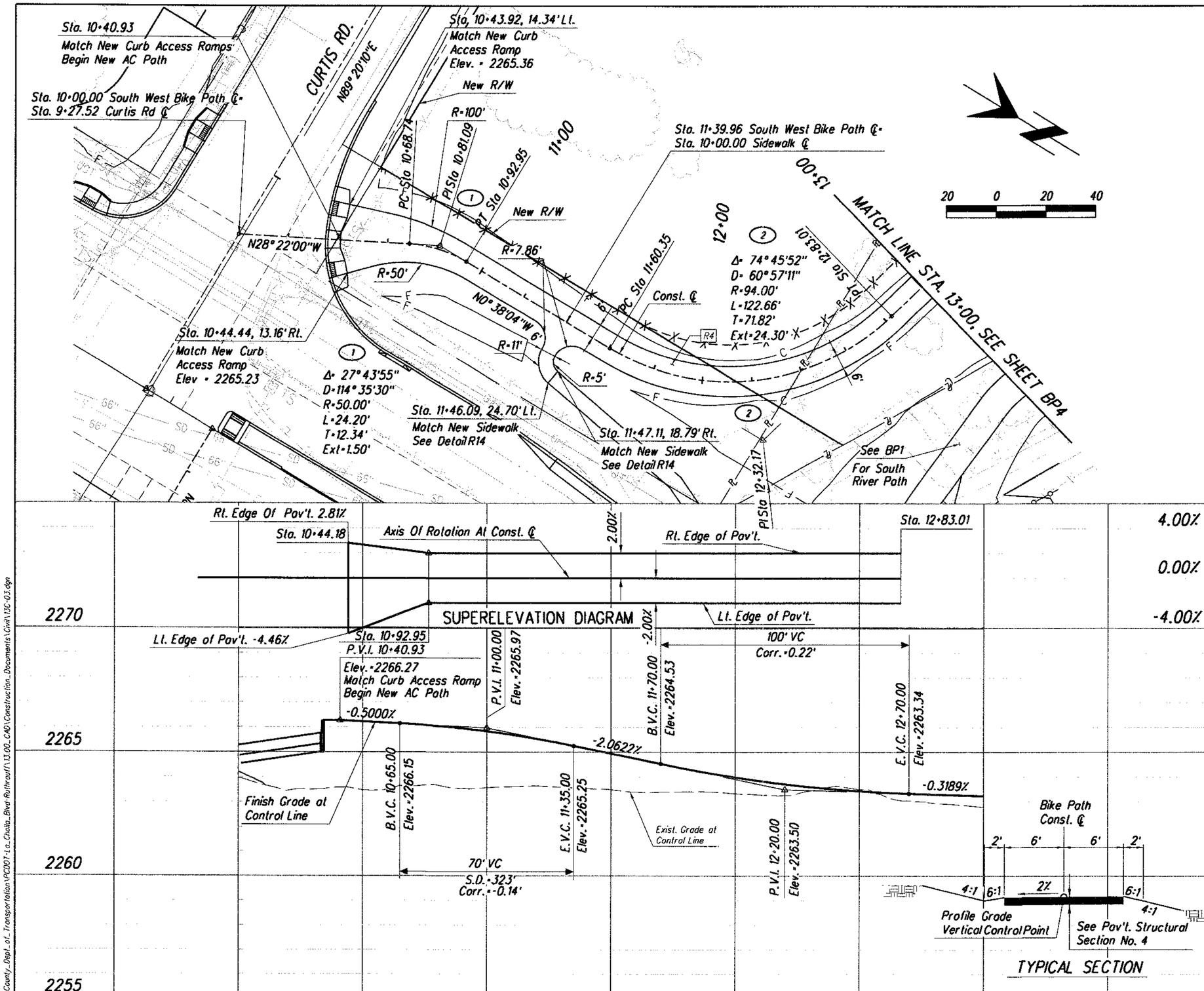

Item No.	Qty.	Unit	Description
R4	395	S.Y.	Pav't. Struct. Sec. No. 4

Notes:
1. Curb Access Ramps, See Roadway Plans Sheet R15.

Arizona Blue Stake
1-800-STAKE-IT
1-800-782-5348
Call Two Working Days Before You Dig

Priscilla S. Cornelio, P.E., Director

No.	Revision Description	Engineer	Date

		Date
Designed	J. Hatch/J. Bennett	July/2009
Drawn	J. Hatch, K. Evers	July/2009
Checked	R. Brittain	July/2009
Proj. Engr.	J. Hatch	Aug/2009

Registered Professional Engineer (Civil) Certificate No. 9364 JOSEPH A. HATCH Signature Date Arizona, U.S.A.
Expires 03-31-2012

HDR Engineering, Inc.
5210 East Williams Circle, Suite 530
Tucson, AZ 85711-4459
(520) 584-3600

Pima County Department of Transportation

LA CHOLLA BLVD.
RUTHRAUFF RD. TO RIVER RD.
RIVER PARK PATH
AND BANK PROTECTION

Scales	Horiz. 1"=20' Vert. 1"=2'	Sheet	BP3 of BP12	Page	82 of 356

Project = 4LCITR

012145
0000000000059914
Pima_County_Dept_of_Transportation\PCDOT-La_Cholla_Blvd-Ruthrauff\13.00_CAD\Construction_Documents\Civil\13C-03.dgn

08\20\09 4:51:07 PM oledesma

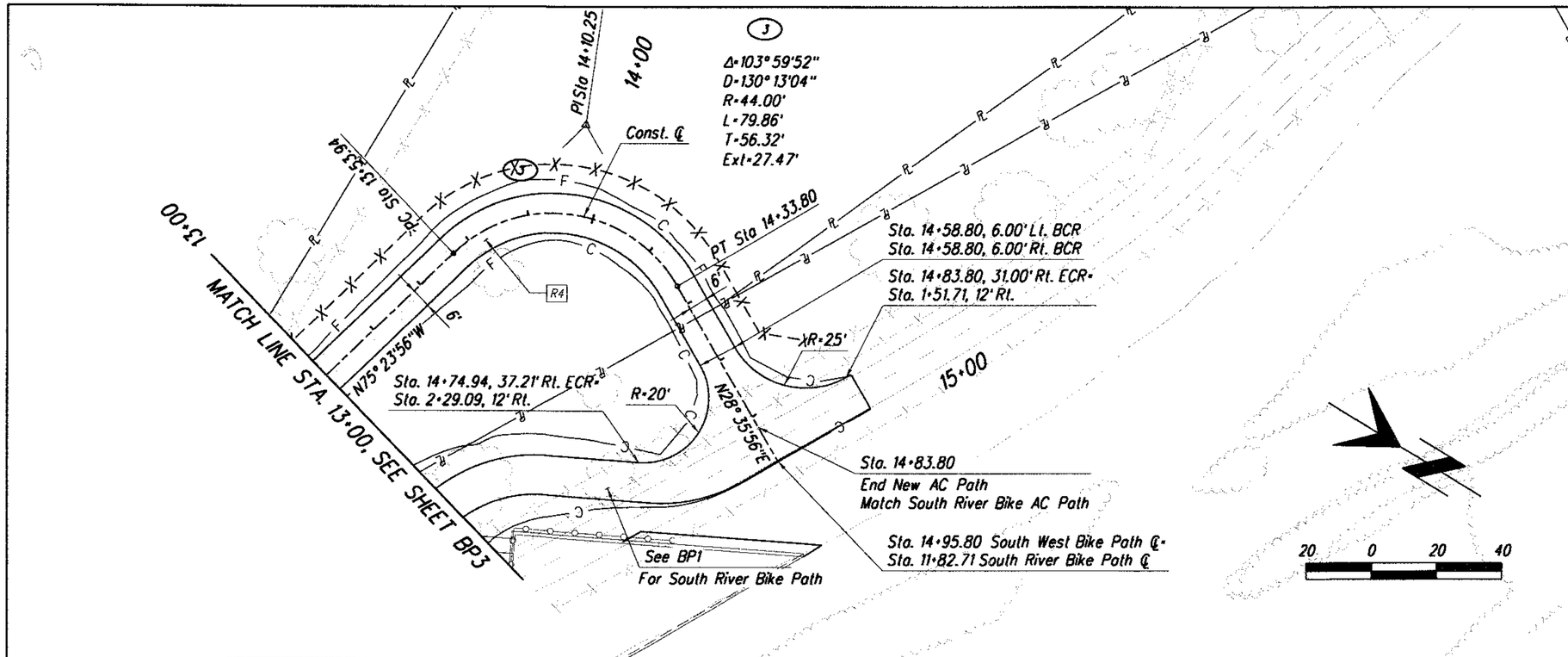

Item No.	Qty.	Unit	Description
R4	282	S.Y.	Pav't. Struct. Sec. No. 4

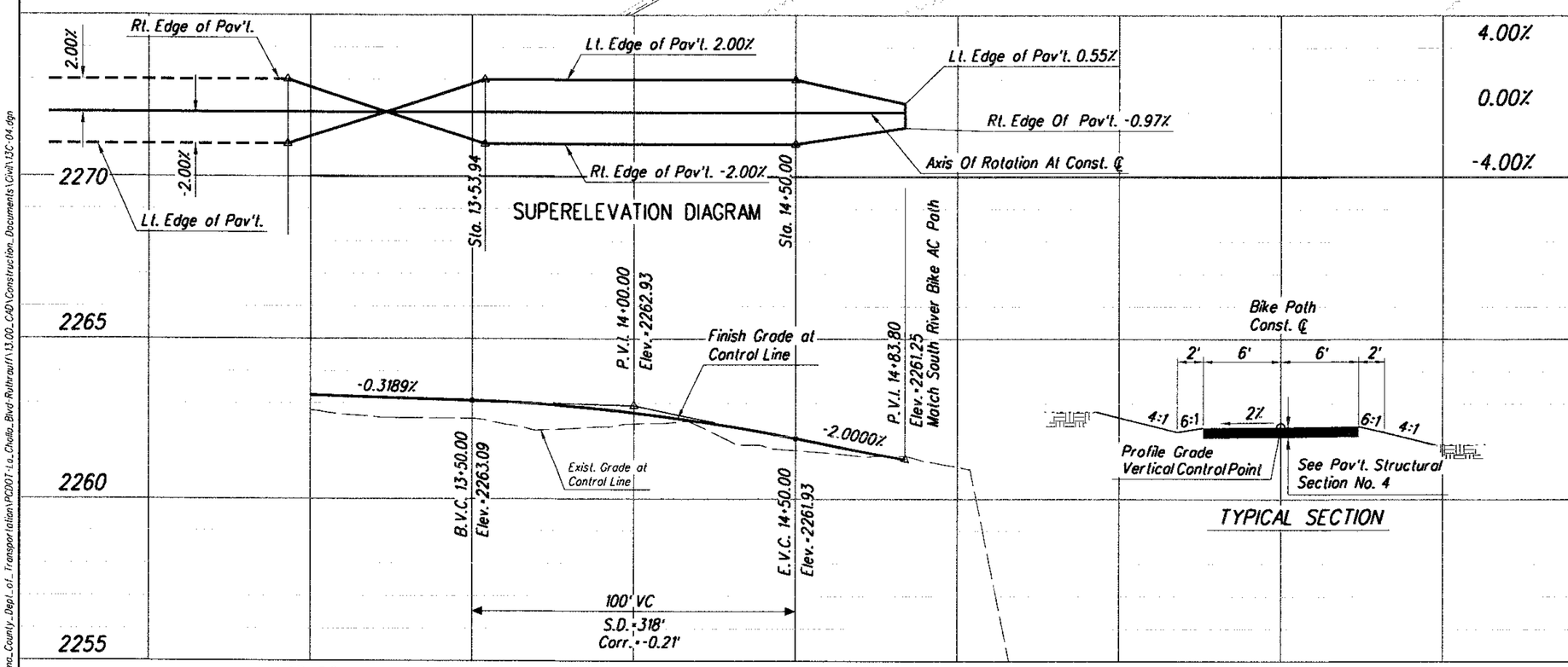

Arizona Blue Stake
1-800-STAKE-IT
1-800-782-5348
Call Two Working Days Before You Dig

Scales: Horiz. 1"=20' / Vert. 1"=2'

Sheet BP4 of BP12

Page 83 of 356

Pima County Department of Transportation

LA CHOLLA BLVD.
RUTHRAUFF RD. TO RIVER RD.
RIVER PARK PATH
AND BANK PROTECTION

HDR Engineering, Inc.
5210 East Williams Circle, Suite 530
Tucson, AZ 85711-4459
(520) 584-3600

Expires 03-31-2012

Designed	J. Hatch/J. Bennett	July/2009
Drawn	J. Hatch, H. Evers	July/2009
Checked	R. Britton	July/2009
Proj. Engr.	J. Hatch	Aug/2009

No.	Revision Description	Engineer	Date

Priscilla S. Cornelio, P.E., Director

012145
0000000000059914
Pima_County_Dept_of_Transportation\PCDOT-La_Cholla_Blvd-Ruthrauff\13.00_CAD\Construction_Documents\Civil\13C-04.dgn

08\20\09 4:51:12 PM aledesma

Project • 4LCITR

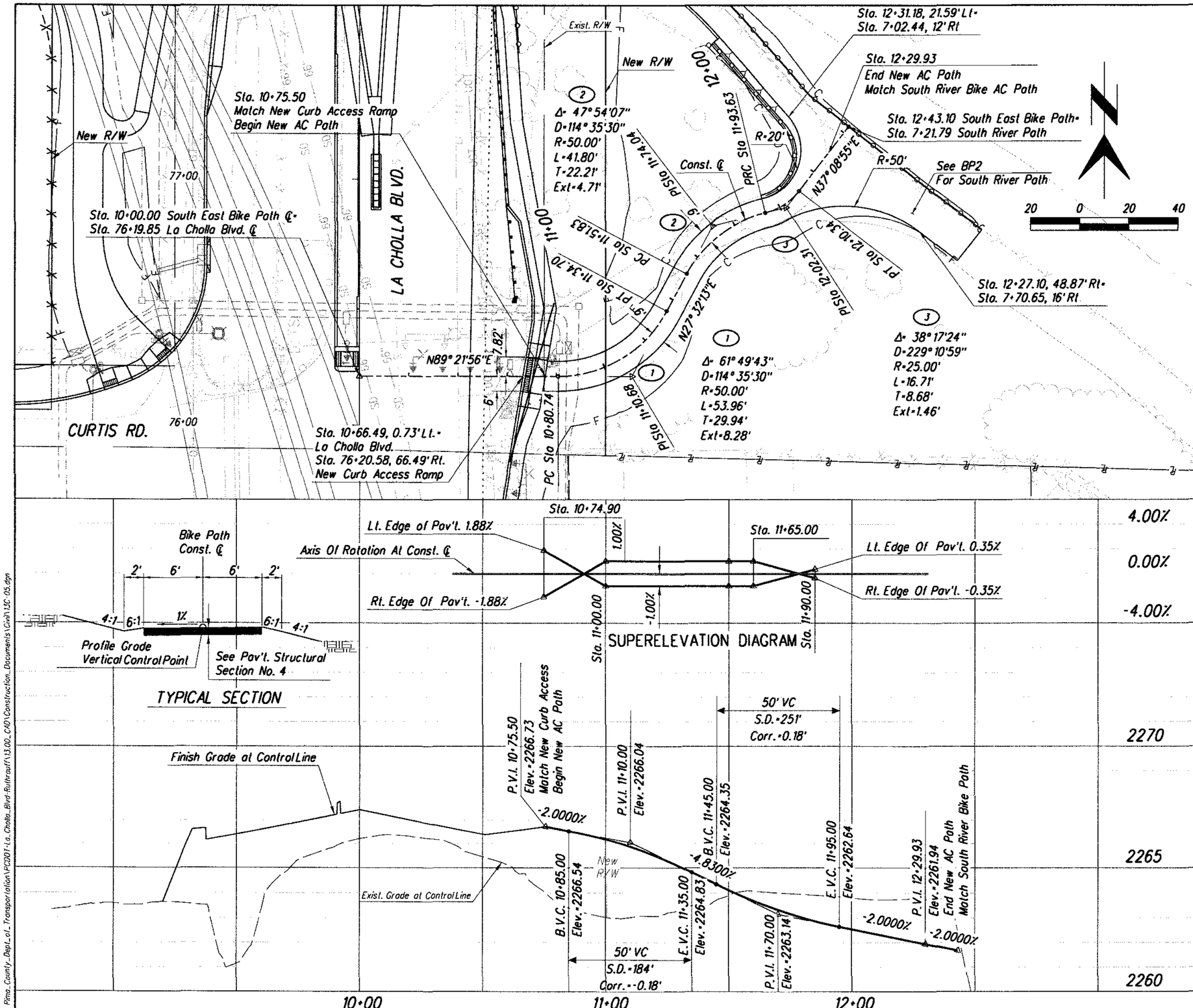

Item No.	Qty.	Unit	Description
R4	252	S.Y.	Pav't. Struct. Sec. No. 4

Notes:
1. Concrete Driveway Details, See Roadway Plans Sheet R5.

Arizona Blue Stake
1-800-STAKE-IT
1-800-782-5348
Call Two Working Days Before You Dig

Pima County Department of Transportation

Priscilla S. Cornelio, P.E., Director

No.	Revision Description	Engineer	Date

		Date
Designed	L. Barela/J. Bennett	July/2009
Drawn	S. Tucker, A. Young	July/2009
Checked	R. Britain	July/2009
Proj. Engr.	J. Hatch	Aug/2009

Registered Professional Engineer (Civil) Certificate No. 9364 JOSEPH A. HATCH Arizona U.S.A. Expires 03-31-2012

HDR Engineering, Inc.
5210 East Williams Circle, Suite 530
Tucson, AZ 85711-4459
(520) 584-3600

LA CHOLLA BLVD.
RUTHRAUFF RD. TO RIVER RD.
RIVER PARK PATH
AND BANK PROTECTION

Scales	Horiz. 1"= 20' Vert. 1"= 2'	Sheet	BP5 of BP12	Page	84 of 356

Project • 4LCITR

012145
00000000005994
Pima_County_Dept_of_Transportation\PCD01-La_Cholla_Blvd-Ruthrauff\13.00_CAD\Construction_Documents\Civil\13C-05.dgn

08\20\09 4:51:16 PM aledesma

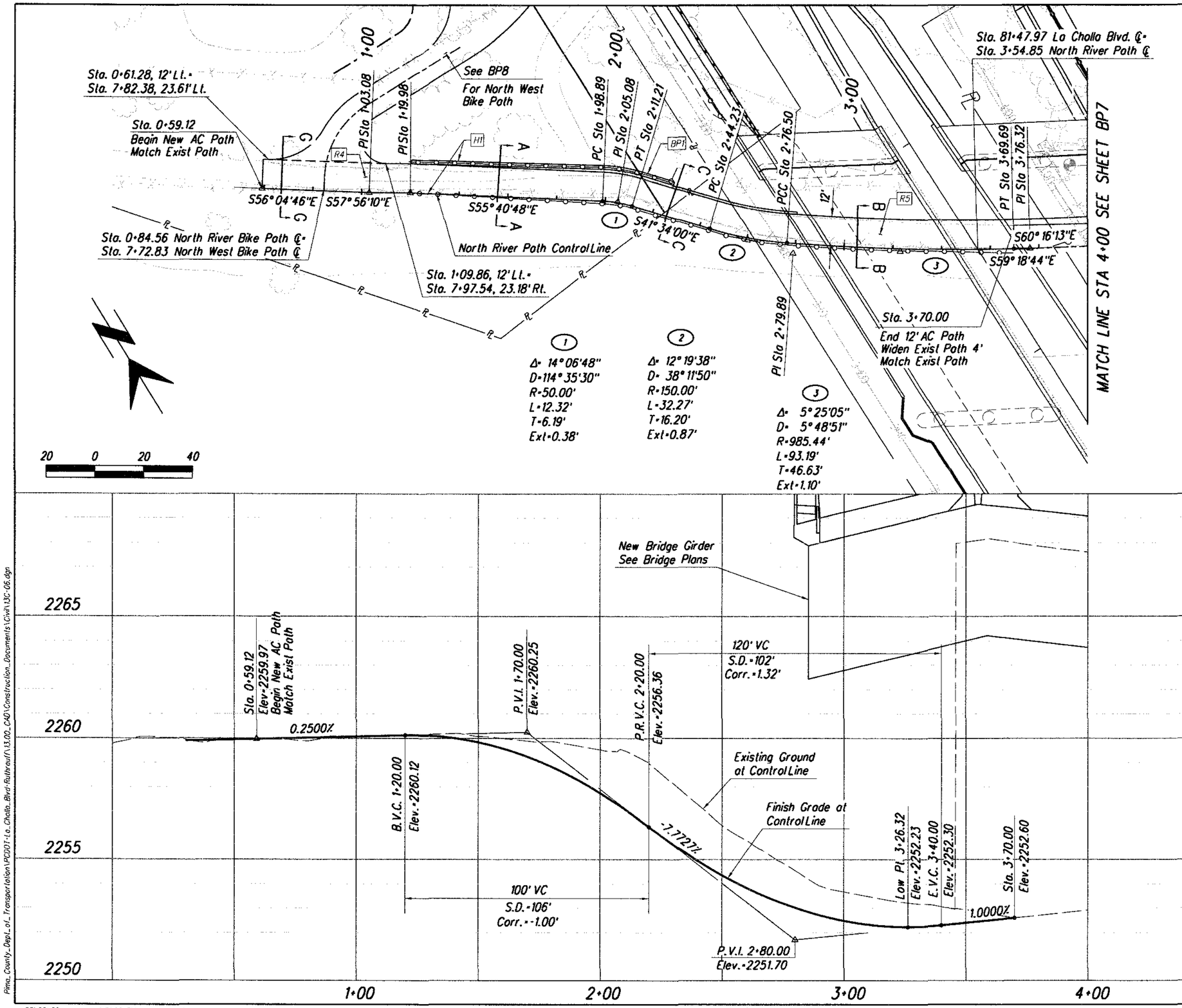

Item No.	Qty.	Unit	Description
R4	80	S.Y.	Sta. 0+60.00 to Sta. 1+20.00 Pav't. Struct. Sec. No. 4
R5	343	S.Y.	Sta. 1+20.00 to Sta. 4+00.00 Pav't. Struct. Sec. No. 5
BP1	20	C.Y.	Bank Protection (Soil Cement) Sta. 1+20.00, 12' Lt to Sta. 2+25.00, 12' Lt
R40	365	L.F.	Barricade Railing, PC/COT Std. Dtl. 105 Sta. 1+20.00, 0' Rt to Sta. 3+70.00, 0' Rt Sta. 1+20.00, 13' Lt to Sta. 2+25.00, 15' Lt

Notes:
1. Cross Sections, See Sheets BP11 and BP12.

Arizona Blue Stake
1-800-STAKE-IT
1-800-782-5348
Call Two Working Days Before You Dig

Pima County Department of Transportation

Priscilla S. Cornelio, P.E., Director

Designed	J. Hatch/J. Bennett	July/2009
Drawn	J. Hatch/H. Evers	July/2009
Checked	R. Britton	July/2009
Proj. Engr.	J. Hatch	Aug/2009

No.	Revision Description	Engineer	Date

Registered Professional Engineer (Civil) CERTIFICATE NO. 9364 JOSEPH A. HATCH State of Arizona
Expires 03-31-2012

HDR Engineering, Inc.
5210 East Williams Circle, Suite 530
Tucson, AZ 85711-4459
(520) 584-3600

LA CHOLLA BLVD.
RUTHRAUFF RD. TO RIVER RD.
RIVER PARK PATH
AND BANK PROTECTION

Scales	Horiz. 1"=20' Vert. 1"=2'	Sheet	BP6 of BP12	Page	85 of 356

012145
0000000000059914
Pima_County_Dept_of_Transportation\PCDOT-La_Cholla_Blvd-Ruthrauff\13.00_CAD\Construction_Documents\Civil\13C-06.dgn

08\20\09 4:51:22 PM aledesma

Project • 4LCITR

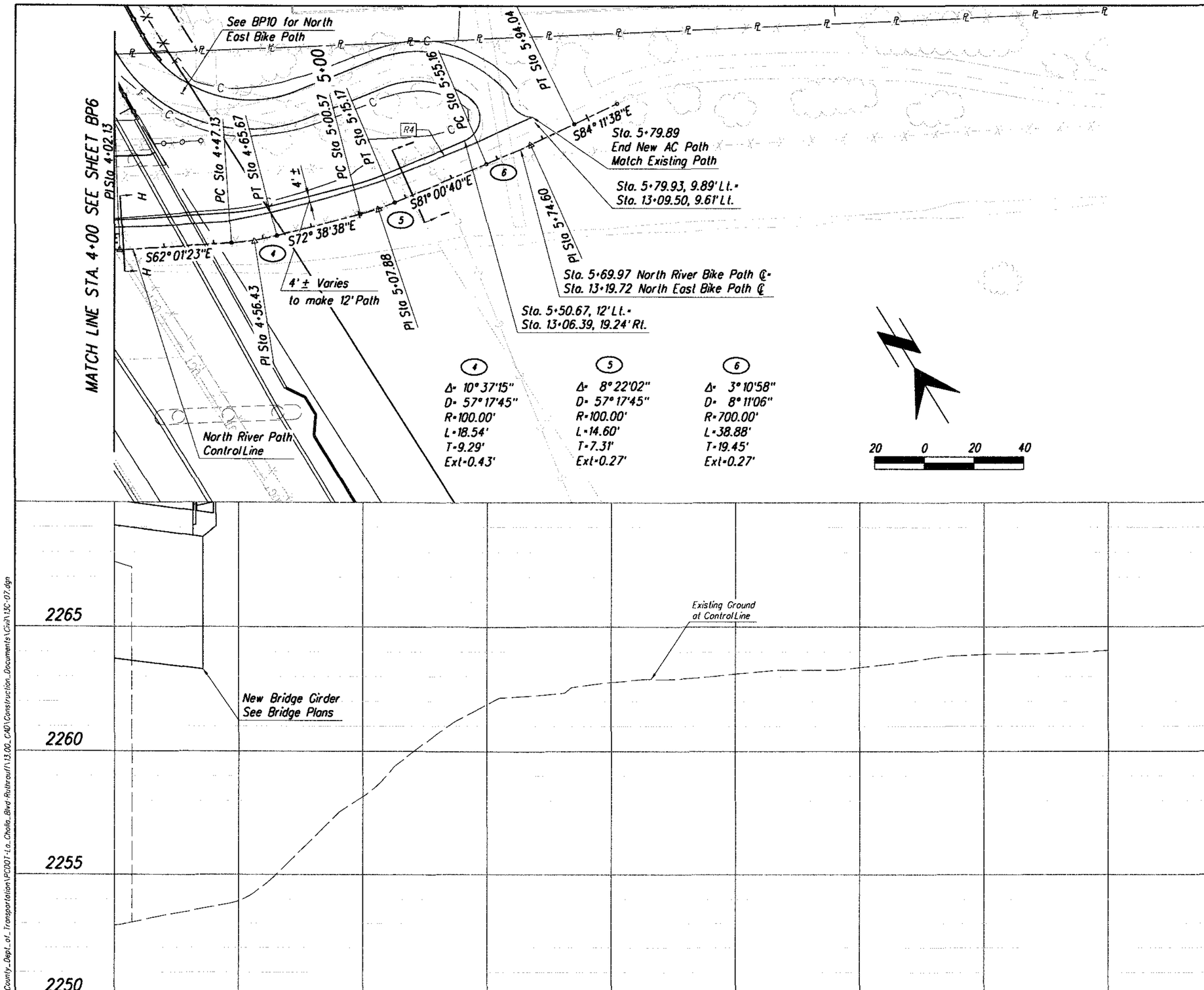

Item No.	Qty.	Unit	Description
R4	48	S.Y.	Pav't. Struct. Sec. No. 4

Notes:
1. Cross Sections, See Sheets BP11 and BP12.

Arizona Blue Stake
1-800-STAKE-IT
1-800-782-5348
Call Two Working Days Before You Dig

Scales	Horiz. 1"=20' Vert. 1"=2'	Sheet	BP7 of BP12	Page	86 of 356

Pima County Department of Transportation

Priscilla S. Cornelio, P.E., Director

No.	Revision Description	Engineer	Date

		Date
Designed	J. Hatch/J. Bennett	July/2009
Drawn	J. Hatch	July/2009
Checked	R. Britton	July/2009
Proj. Engr.	J. Hatch	Aug/2009

Registered Professional Engineer (Civil) CERTIFICATE NO. 9364 JOSEPH A. HATCH Date Signed 8-14-09 ARIZONA U.S.A.
Expires 03-31-2012

HDR
HDR Engineering, Inc.
5210 East Williams Circle, Suite 530
Tucson, AZ 85711-4459
(520) 584-3600

LA CHOLLA BLVD.
RUTHRAUFF RD. TO RIVER RD.
RIVER PARK PATH
AND BANK PROTECTION

012145
00000000005994
Pima_County_Dept._of._Transportation\PCDOT-La_Cholla_Blvd-Ruthrauff\13.00_CAD\Construction_Documents\Civil\13C-07.dgn

08\20\09 4:51:26 PM oledesma

Project • 4LCITR

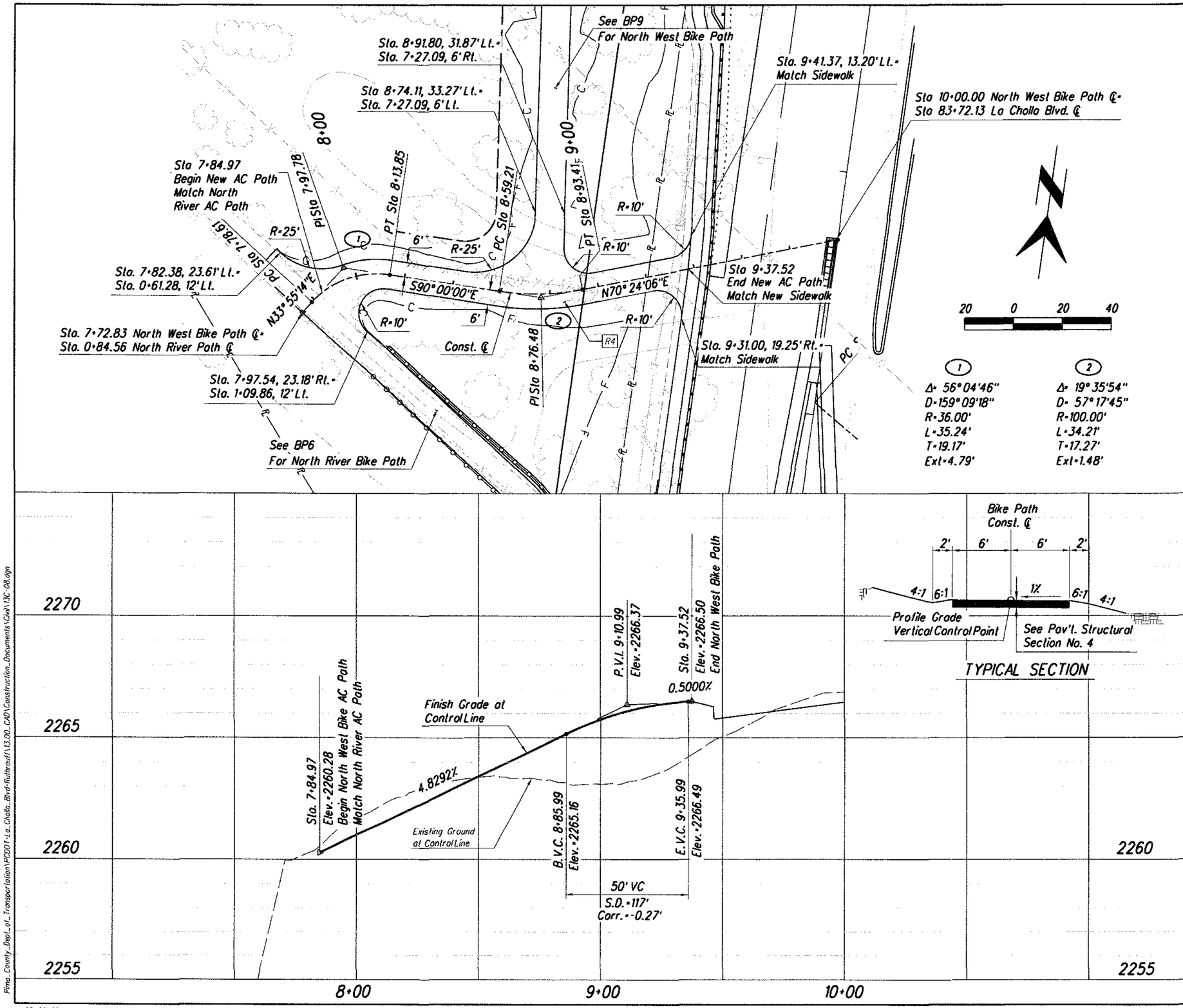

Item No.	Qty.	Unit	Description
R4	285	S.Y.	Pav't. Struct. Sec. No. 4

No.	Revision Description	Engineer	Date

		Date
Designed	J. Hatch/J. Bennett	July/2009
Drawn	J. Hatch	July/2009
Checked	R. Britain	July/2009
Proj. Engr.	J. Hatch	Aug/2009

Registered Professional Engineer
CERTIFICATE NO. 9364
JOSEPH A. HATCH
ARIZONA, U.S.A.
Date Signed 8/28/09
Expires 03-31-2012

HDR Engineering, Inc.
5210 East Williams Circle, Suite 530
Tucson, AZ 85711-4459
(520) 584-3600

Pima County Department of Transportation

Priscilla S. Cornelio, P.E., Director

LA CHOLLA BL VD.
RUTHRAUFF RD. TO RIVER RD.
ROADWAY DETAILS
DETAIL R14

Arizona Blue Stake
1-800-STAKE-IT
1-800-782-5348
Call Two Working Days Before you Dig

Scales: Horiz. 1"= 20' Vert. 1"= 2'

Sheet BP8 of BP12

Page 87 of 356

012145
00000000000059914
Pima_County_Dept_of_Transportation\PCDOT-La_Cholla_Blvd-Ruthrauff\13.00_CAD\Construction_Documents\Civil\13C-08.dgn

08\20\09 4:51:30 PM aledesma

Project • 4LCITR

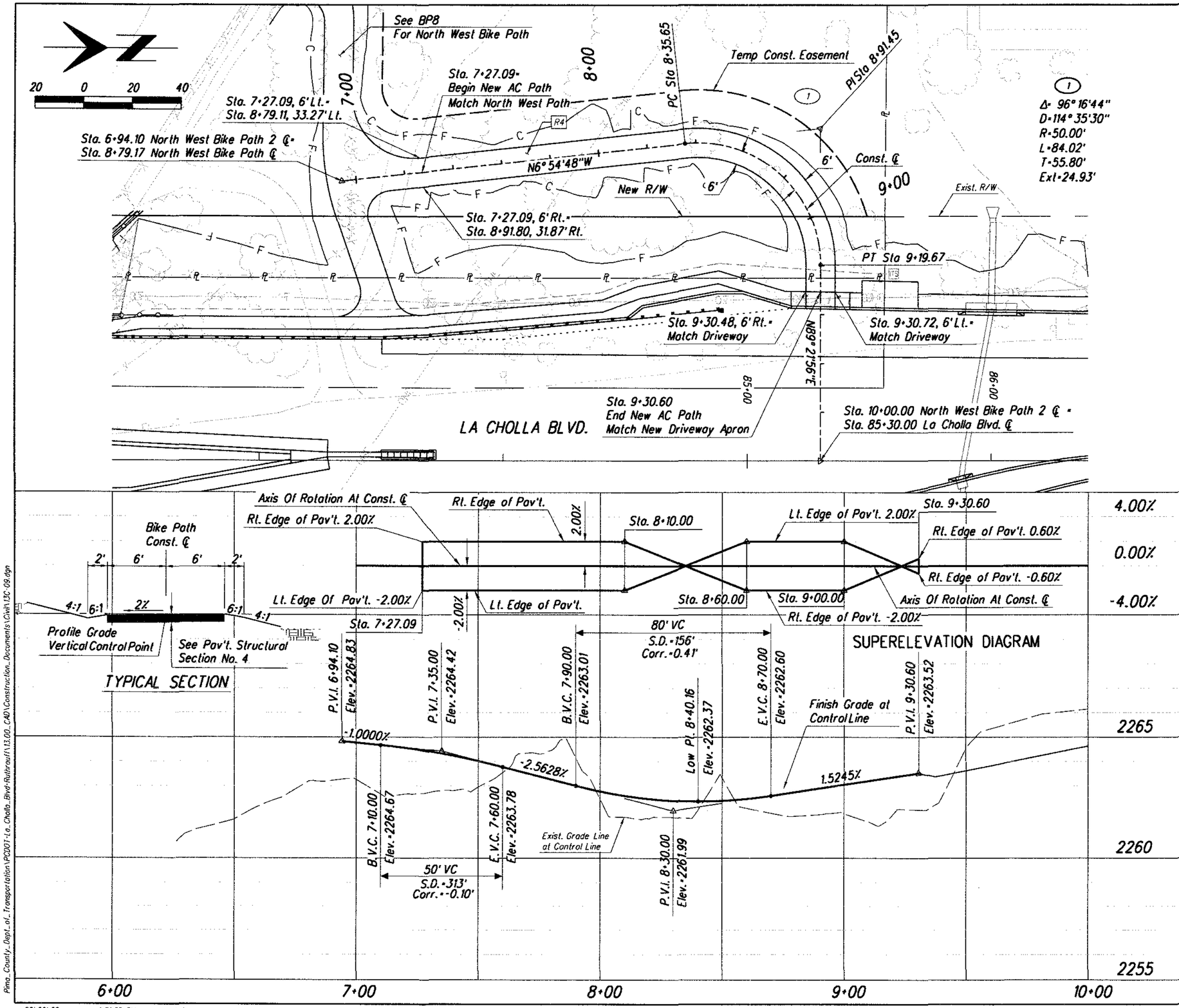

Item No.	Qty.	Unit	Description
R4	271	S.Y.	Pav't. Struct. Sec. No. 4

Notes:
1. Concrete Driveway Details, See Roadway Plans Sheet R6.

Arizona Blue Stake
1-800-STAKE-IT
1-800-782-5348
Call Two Working Days Before You Dig

Pima County Department of Transportation
Priscilla S. Cornelio, P.E., Director

No.	Revision Description	Engineer	Date

		Date
Designed	L. Barela/J. Bennett	July/2009
Drawn	S. Tucker, A. Young	July/2009
Checked	R. Britton	July/2009
Proj. Engr.	J. Hatch	Aug/2009

Registered Professional Engineer (Civil)
CERTIFICATE NO. 9364
JOSEPH A. HATCH
Date Signed
Arizona, U.S.A.
Expires 03-31-2012

HDR Engineering, Inc.
5210 East Williams Circle, Suite 530
Tucson, AZ 85711-4459
(520) 584-3600

LA CHOLLA BLVD.
RUTHRAUFF RD. TO RIVER RD.
ROADWAY DETAILS
DETAIL R14

Scales: Horiz. 1"= 20' Vert. 1"= 2'

Project • 4LCITR

08\20\09 4:51:35 PM aledesmo

012145
0000000000059914
Pima_County_Dept_of_Transportation\PCDOT-La_Cholla_Blvd-Ruthrauff\13.00_CAD\Construction_Documents\Civil\13C-09.dgn

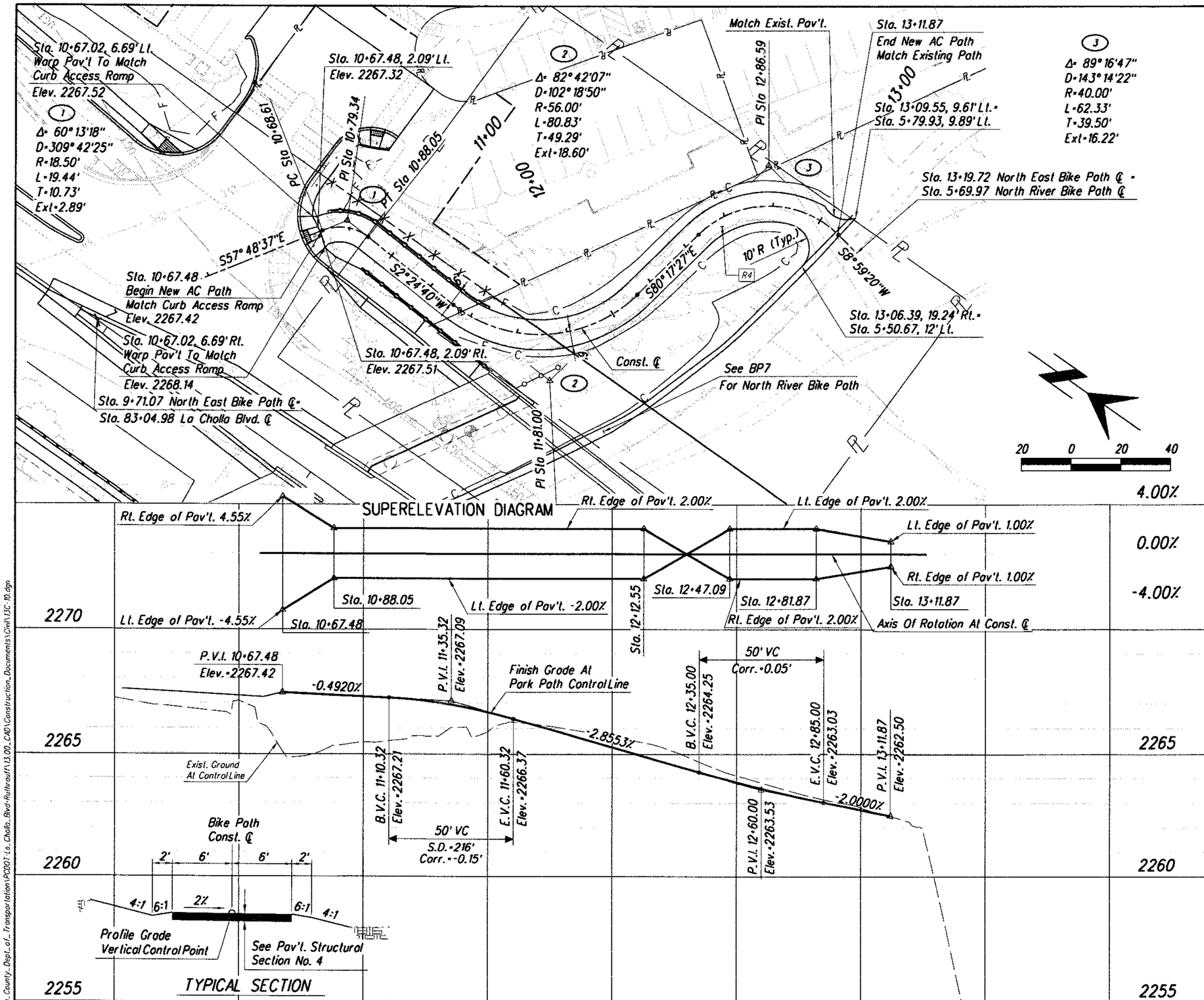

Item No.	Qty.	Unit	Description
R4	328	S.Y.	Pav't. Struct. Sec. No. 4

Notes:
1. Curb Access Ramp Details, See Detail R13, Sheet RD10.

Arizona Blue Stake
1-800-STAKE-IT
1-800-782-5348
Call Two Working Days Before You Dig

No.	Revision Description	Engineer	Date

		Date
Designed	L. Barela/J. Bennett	July/2009
Drawn	J. Soto	July/2009
Checked	R. Britton	July/2009
Proj. Engr.	J. Hatch	Aug/2009

Priscilla S. Cornelio, P.E., Director

Registered Professional Engineer (Civil) CERTIFICATE NO. 9364 JOSEPH A. HATCH Date Signed 8/14/09 ARIZONA, U.S.A. Expires 03-31-2012

HDR Engineering, Inc.
5210 East Williams Circle, Suite 530
Tucson, AZ 85711-4459
(520) 584-3600

Pima County Department of Transportation

LA CHOLLA BLVD.
RUTHRAUFF RD. TO RIVER RD.
RIVER PARK PATH
AND BANK PROTECTION

Scales	Horiz. 1"= 20' Vert. 1"= 2'	Sheet	BP10 of BP12	Page	89 of 356

012145
0000000000059914
Pima_County_Dept_of_Transportation\PC001-La_Cholla_Blvd-Ruthrauff\13.00_CAD\Construction_Documents\Civil\13C_10.dgn

08\20\09 4:51:39 PM aledesma

Project • 4LCITR

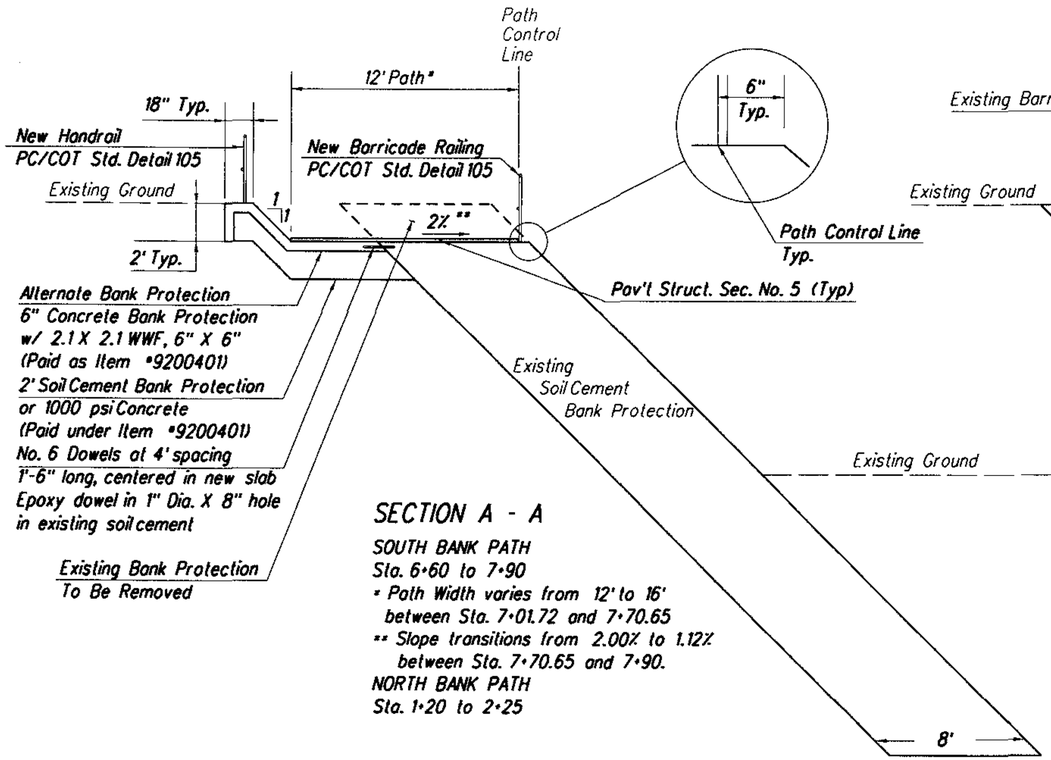

SECTION A - A

SOUTH BANK PATH
Sta. 6+60 to 7+90
* Path Width varies from 12' to 16' between Sta. 7+01.72 and 7+70.65
** Slope transitions from 2.00% to 1.12% between Sta. 7+70.65 and 7+90.
NORTH BANK PATH
Sta. 1+20 to 2+25

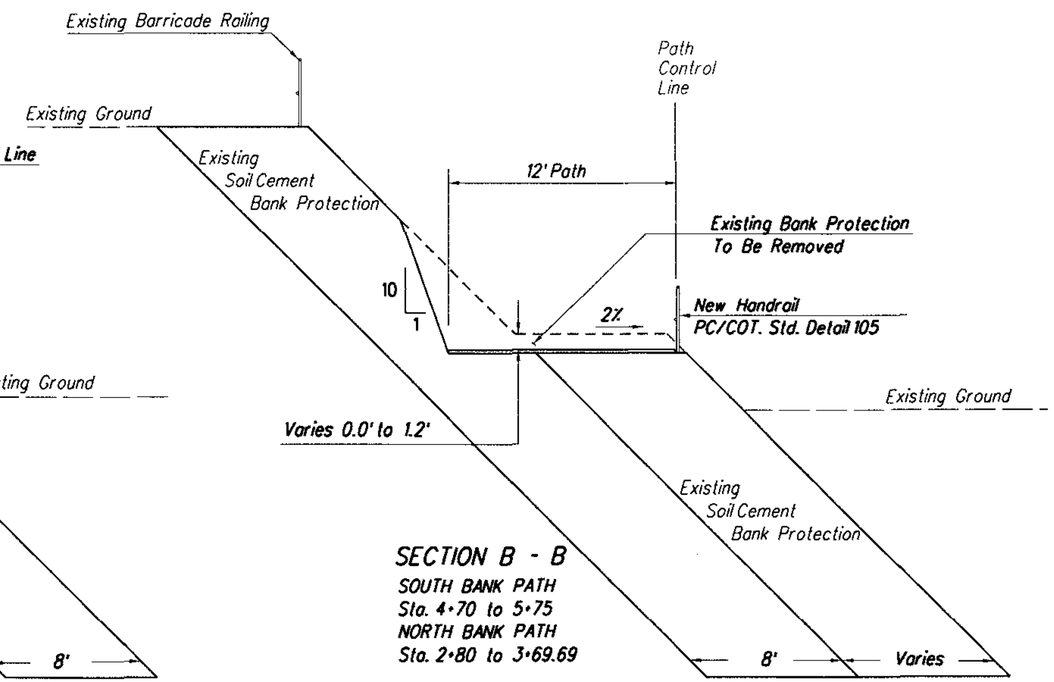

SECTION B - B

SOUTH BANK PATH
Sta. 4+70 to 5+75
NORTH BANK PATH
Sta. 2+80 to 3+69.69

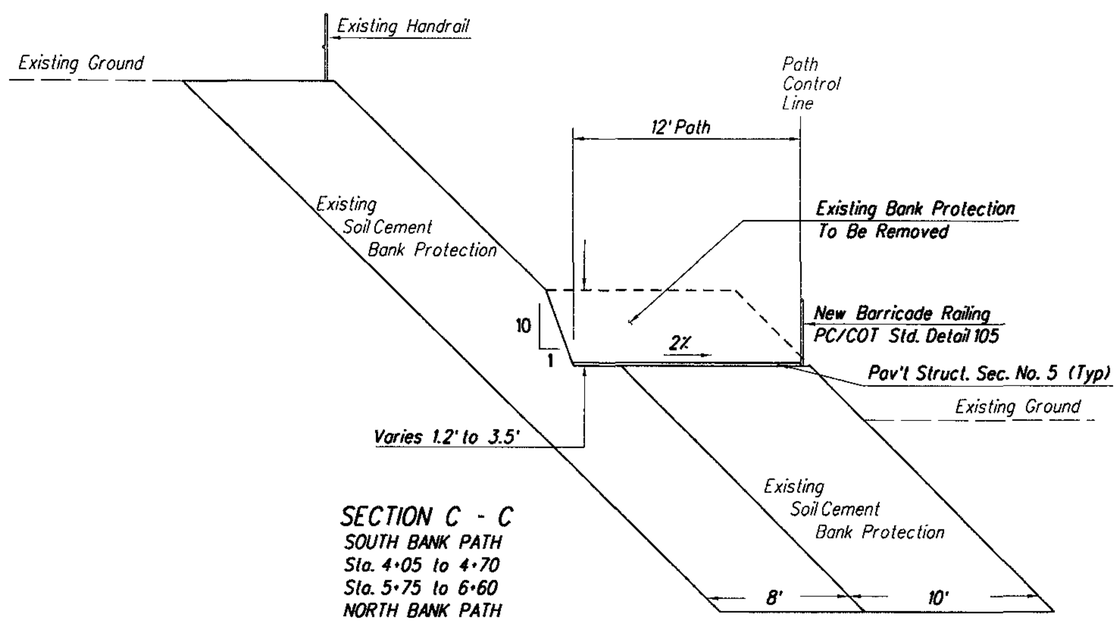

SECTION C - C

SOUTH BANK PATH
Sta. 4+05 to 4+70
Sta. 5+75 to 6+60
NORTH BANK PATH
Sta. 2+25 to 2+80

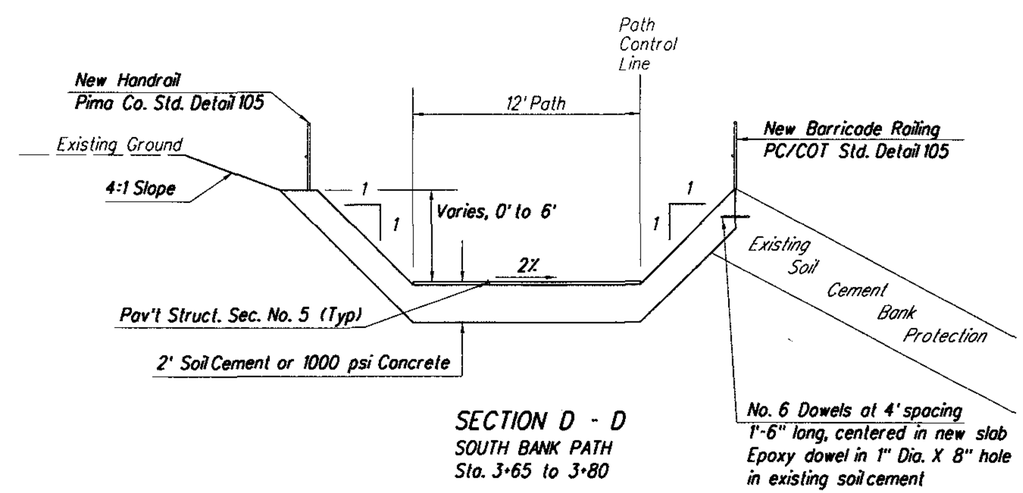

SECTION D - D

SOUTH BANK PATH
Sta. 3+65 to 3+80

Arizona Blue Stake
1-800-STAKE-IT
1-800-782-5348
Call Two Working Days Before You Dig

Scales	Horiz. As Noted / Vert. As Noted	Sheet	BP11 of BP12	Page	90 of 356

Pima County Department of Transportation
Priscilla S. Cornelio, P.E., Director

No.	Revision Description	Engineer	Date

		Date
Designed	J. Hatch	July/2009
Drawn	J. Hatch	July/2009
Checked	R. Britton	July/2009
Proj. Engr.	J. Hatch	Aug/2009

Registered Professional Engineer (Civil) Certificate No. 9364 JOSEPH A. HATCH Date Signed 8/20/09 Arizona, U.S.A.
Expires 03-31-2012

HDR Engineering, Inc.
5210 East Williams Circle, Suite 530
Tucson, AZ 85711-4459
(520) 594-3600

LA CHOLLA BLVD.
RUTHRAUFF RD. TO RIVER RD.
RIVER PARK PATH
AND BANK PROTECTION

Project # 4LCITR

012145
0000000000059914
Pima_County_Dept._of_Transportation\PCD01-La_Cholla_Blvd-Ruthrauff\13.00_CAD\Construction_Documents\Civil\13C-11.dgn

08\20\09 4:51:44 PM aledesma

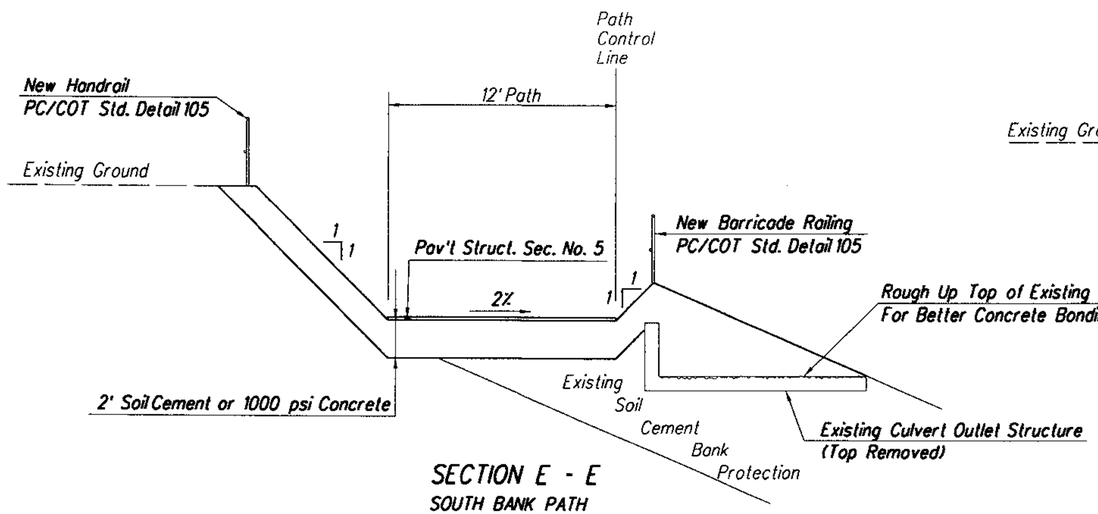

SECTION E - E
SOUTH BANK PATH
Sta. 3+80 to 4+05

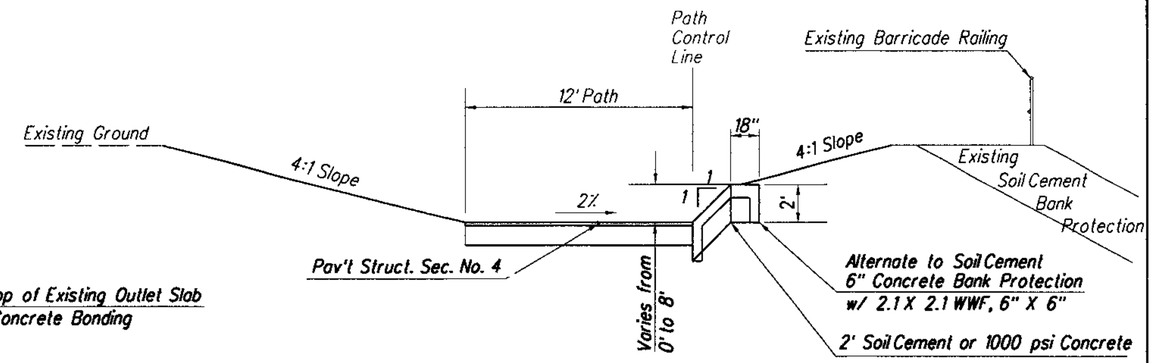

SECTION F - F
SOUTH BANK PATH
Sta. 3+25 to 3+65

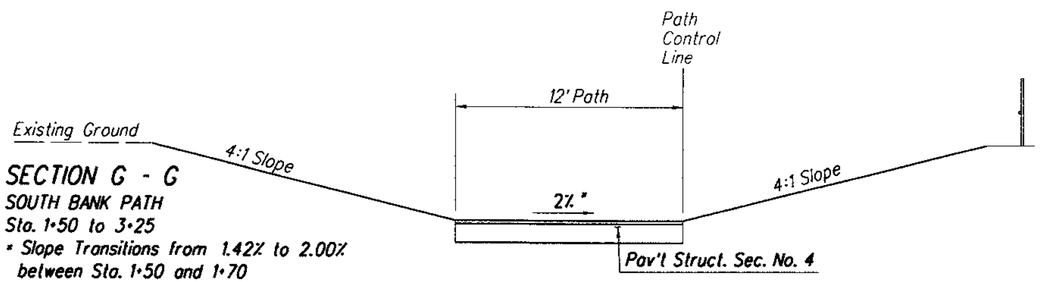

SECTION G - G
SOUTH BANK PATH
Sta. 1+50 to 3+25
* Slope Transitions from 1.42% to 2.00% between Sta. 1+50 and 1+70
NORTH BANK PATH
Sta. 0+60 to 1+20
* Slope Transitions from 3.58% to 2.00% between Sta. 0+60 and 0+80

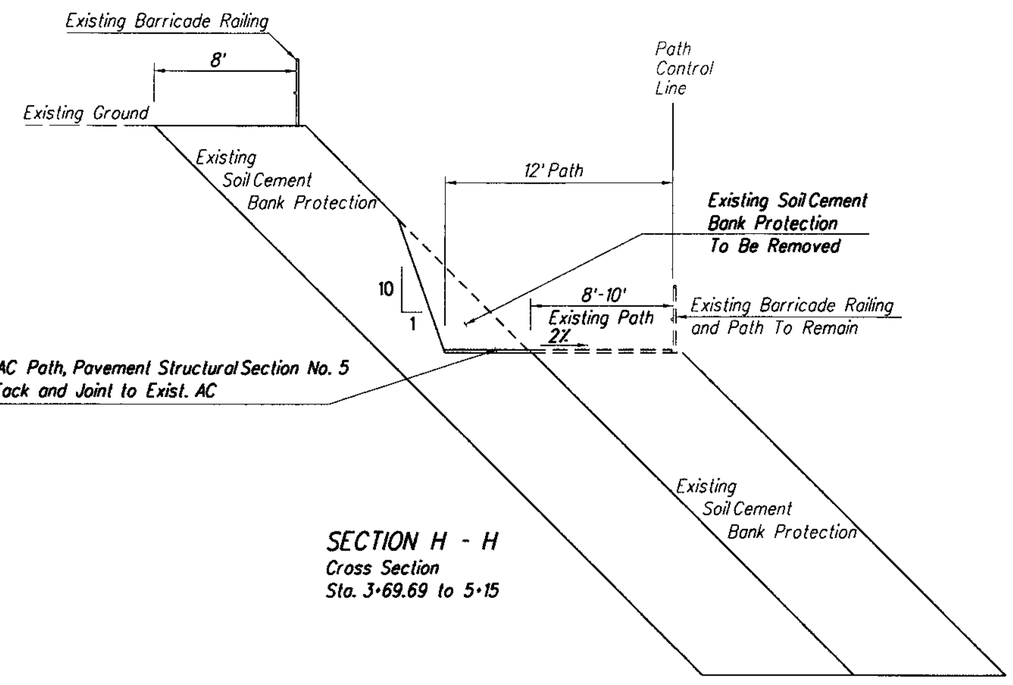

SECTION H - H
Cross Section
Sta. 3+69.69 to 5+15

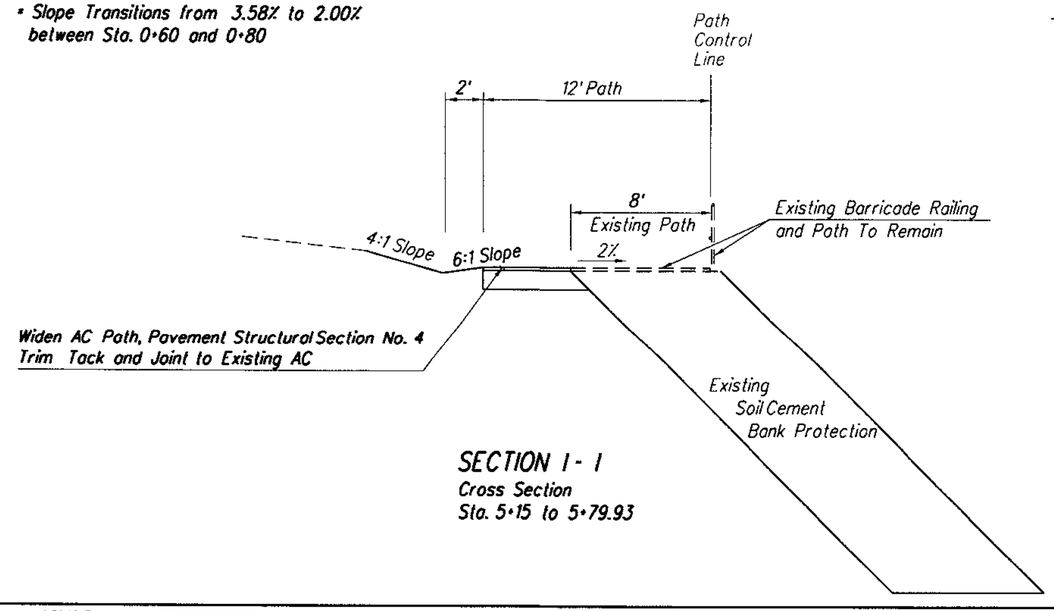

SECTION I - I
Cross Section
Sta. 5+15 to 5+79.93

Arizona Blue Stake
1-800-STAKE-IT
1-800-782-5348
Call Two Working Days Before You Dig

Scales	Horiz. As Noted / Vert. As Noted	Sheet	BP12 of BP12	Page	91 of 356

Project # 4LCITR

Priscilla S. Cornelio, P.E., Director

Pima County Department of Transportation

No.	Revision Description	Engineer	Date

		Date
Designed	J. Hatch	July 2009
Drawn	J. Hatch	July 2009
Checked	R. Britton	July 2009
Proj. Engr.	J. Hatch	Aug 2009

Registered Professional Engineer (Civil) Certificate No. 9364 JOSEPH A. HATCH Arizona U.S.A.
Expires 03-31-2012

HDR Engineering, Inc.
5210 East Williams Circle, Suite 530
Tucson, AZ 85711-4459
(520) 594-3600

LA CHOLLA BLVD.
RUTHRAUFF RD. TO RIVER RD.
RIVER PARK PATH
AND BANK PROTECTION

012145
0000000005994
Pima_County_Dept._of._Transportation\PCDOT-La_Cholla_Blvd-Ruthrauff\13.00_CAD\Construction_Documents\Civil\13C-12.dgn

08\20\09 4:51:49 PM oledesma

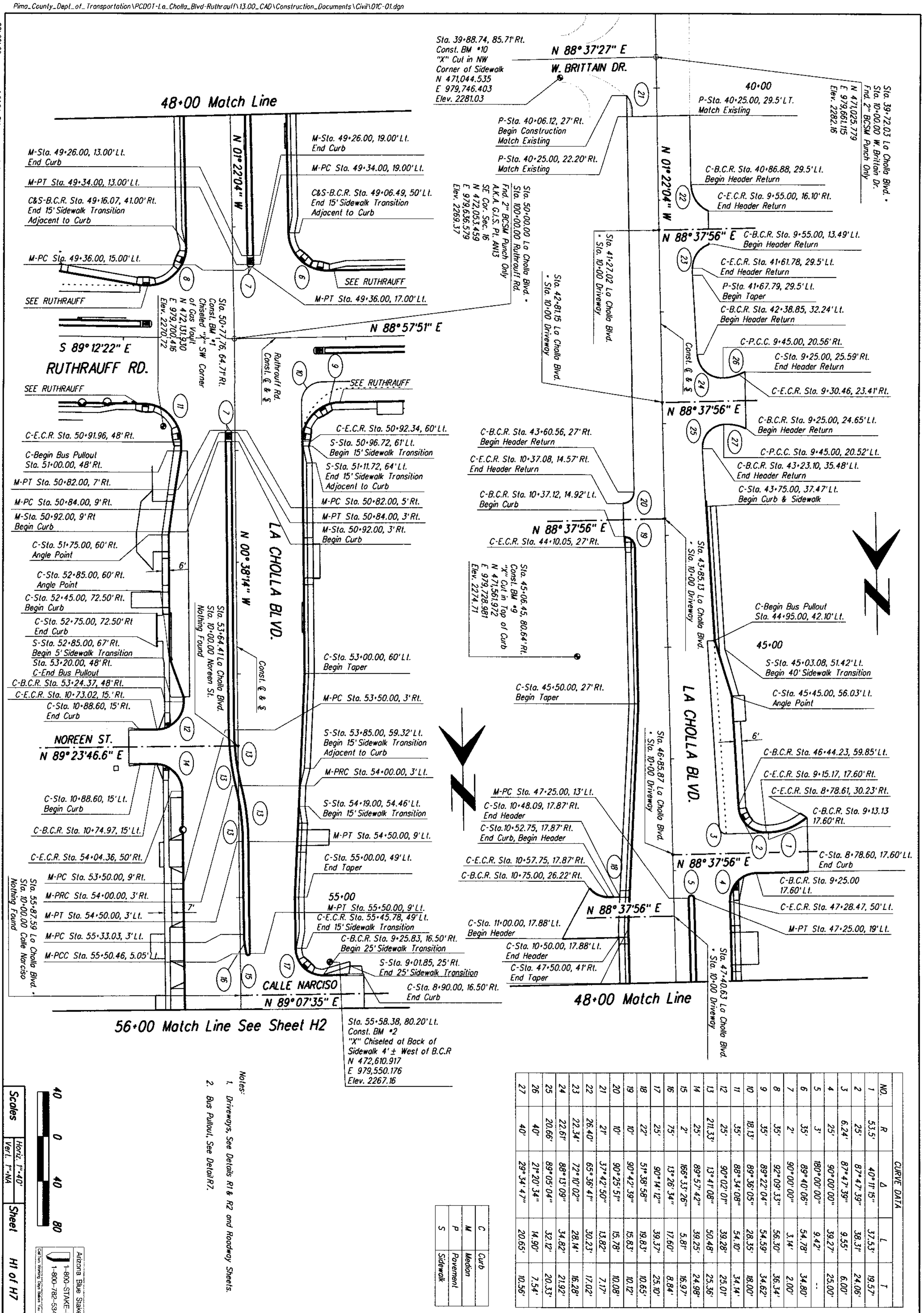

CURVE DATA				
NO.	R	Δ	L	T
1	53.5'	40° 11' 15"	37.53'	19.57'
2	25'	87° 47' 39"	38.31'	24.06'
3	6.24'	87° 47' 39"	9.55'	6.00'
4	25'	90° 00' 00"	39.27'	25.00'
5	3'	180° 00' 00"	9.42'	--
6	35'	89° 40' 06"	54.78'	34.80'
7	2'	90° 00' 00"	3.14'	2.00'
8	35'	92° 09' 33"	56.30'	36.34'
9	35'	89° 22' 04"	54.59'	34.62'
10	18.13'	89° 36' 05"	28.35'	18.00'
11	35'	88° 34' 08"	54.10'	34.14'
12	25'	90° 02' 01"	39.28'	25.01'
13	211.33'	13° 41' 08"	50.48'	25.36'
14	25'	89° 57' 42"	39.25'	24.98'
15	2'	166° 33' 26"	5.81'	16.97'
16	75'	13° 26' 34"	17.60'	8.84'
17	25'	90° 14' 12"	39.37'	25.10'
18	22'	51° 38' 58"	19.83'	10.65'
19	10'	90° 42' 39"	15.83'	10.12'
20	10'	90° 25' 51"	15.78'	10.08'
21	21'	37° 42' 50"	13.82'	7.17'
22	26.40'	65° 36' 41"	30.23'	17.02'
23	22.34'	72° 10' 02"	28.14'	16.28'
24	22.61'	88° 13' 09"	34.82'	21.92'
25	20.66'	89° 05' 04"	32.12'	20.33'
26	40'	21° 20' 34"	14.90'	7.54'
27	40'	29° 34' 47"	20.65'	10.56'

C	Curb
M	Median
P	Pavement
S	Sidewalk

Notes:
1. Driveways, See Details R1 & R2 and Roadway Sheets.
2. Bus Pullout, See Detail R7.

Scales: Horiz. 1"=40' Vert. 1"=NA

40 0 40 80

Arizona Blue Stake
1-800-STAKE-IT
1-800-782-5348
Call Two Working Days Before You Dig

Sheet H1 of H7

Page 92 of 356

Project • 4LCITR

Pima County Department of Transportation

Priscilla S. Cornelio, P.E., Director

LA CHOLLA BLVD.
RUTHRAUFF RD. TO RIVER RD.
HORIZONTAL CONTROL &
MEDIAN GEOMETRY
FOR LA CHOLLA BLVD.

HDR
HDR Engineering, Inc.
5210 East Williams Circle, Suite 530
Tucson, AZ 85711-4459
(520) 584-3600

Expires 03-31-2011

No.	Revision Description	Engineer	Date

		Date
Designed	L. Barela / J. Bennett	July/2009
Drawn	J. Amos	July/2009
Checked	R. Brittain	July/2009
Proj. Engr.	L. Barela	Aug/2009

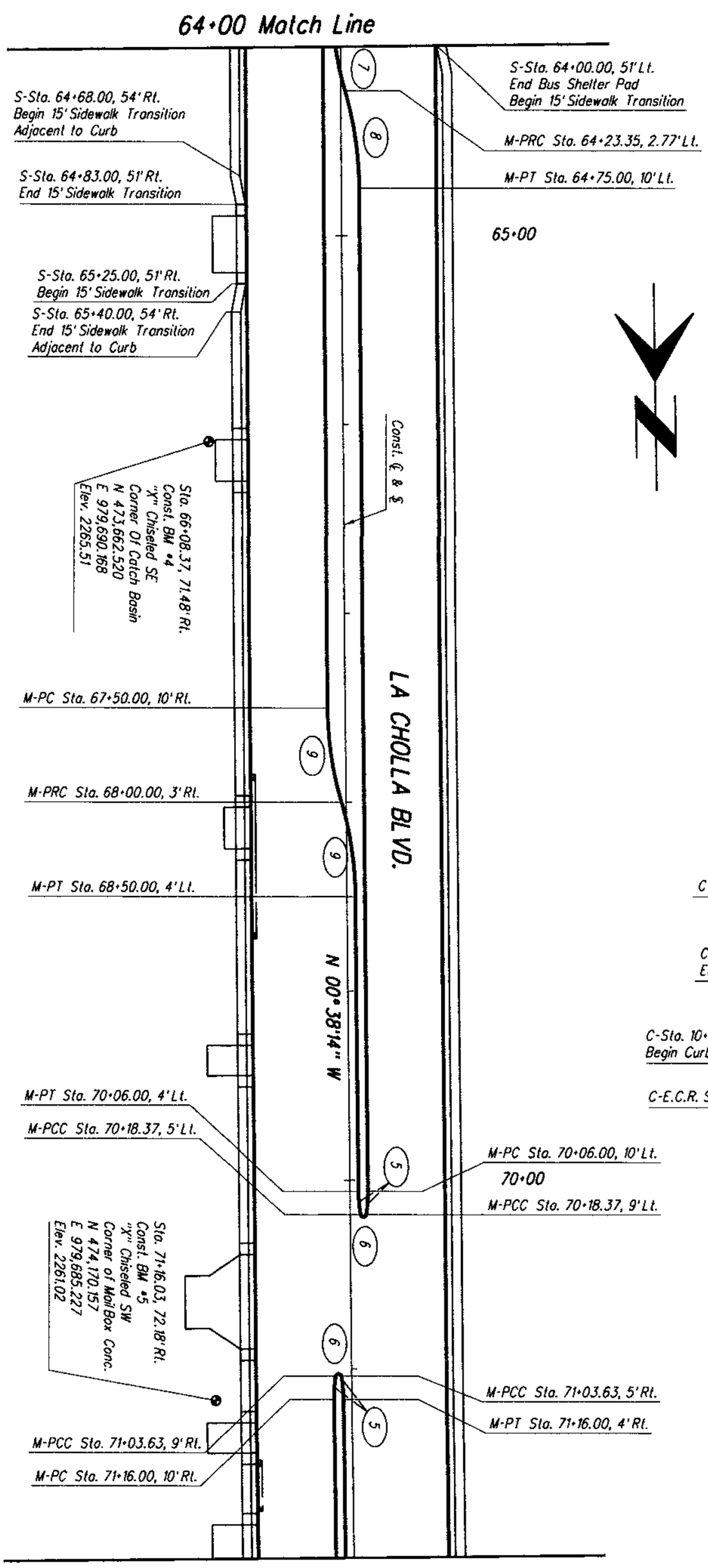

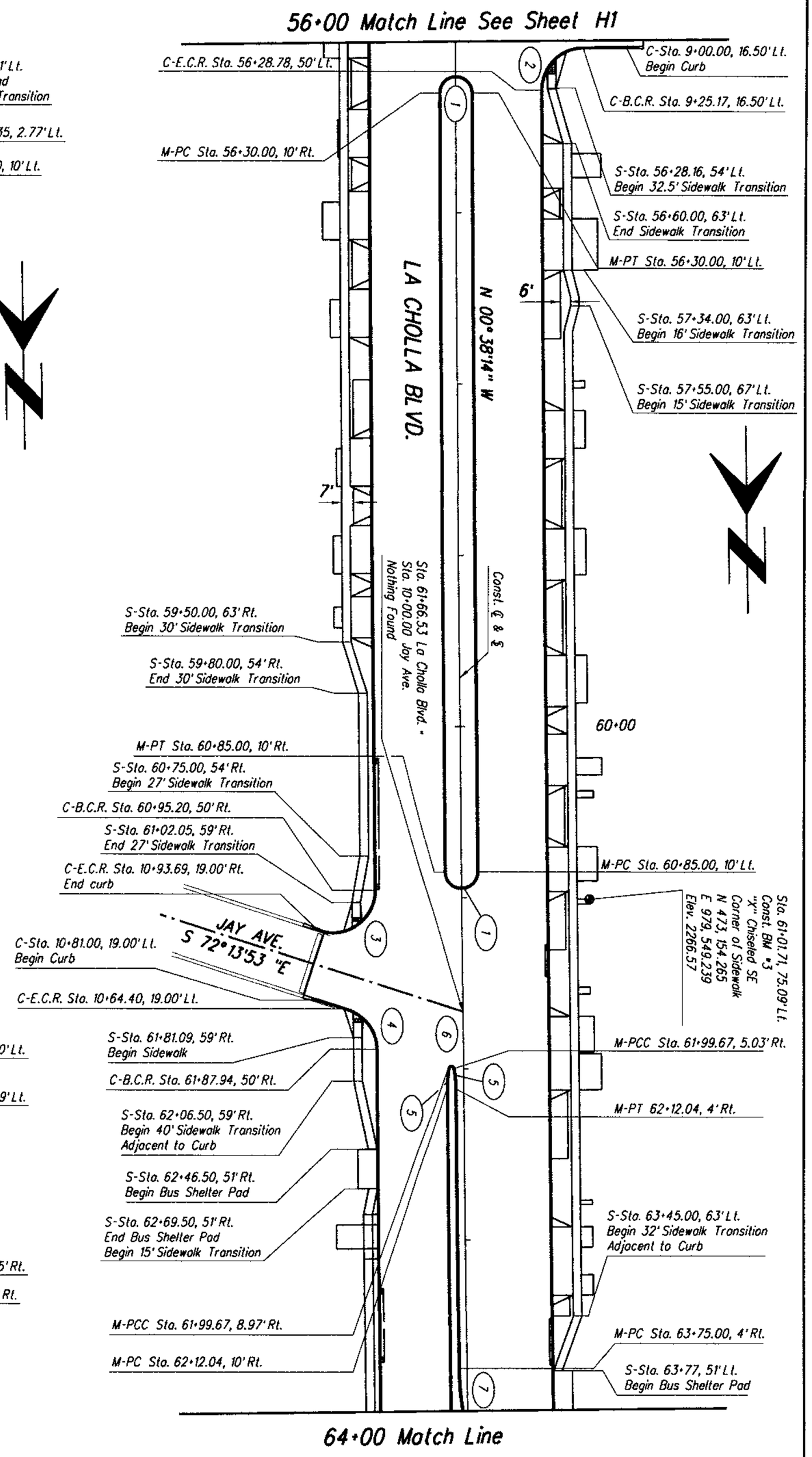

C	Curb
M	Median
P	Pavement
S	Sidewalk

CURVE DATA

NO.	R	Δ	L	T
1	10'	180° 00' 00"	31.42'	--
2	25'	89° 45' 49"	39.17'	24.90'
3	25'	108° 24' 21"	47.30'	34.67'
4	25'	71° 35' 39"	31.24'	18.03'
5	75'	9° 29' 40"	12.43'	6.23'
6	2'	161° 00' 39"	5.62'	11.96'
7	176.07'	15° 56' 21"	48.98'	24.65'
8	188.07'	15° 56' 21"	52.32'	26.33'
9	182.07'	15° 56' 21"	50.65'	25.49'

Notes:
1. Driveways, See Details R1, R2 & Roadway Plans.

Scales: Horiz. 1"=40' Vert. 1"=NA

40 0 40 80

Arizona Blue Stake
1-800-STAKE-IT
1-800-782-5348
Call Two Working Days Before You Dig

Sheet H2 of H7

Page 93 of 356

Pima County Department of Transportation

Priscilla S. Cornelio, P.E., Director

LA CHOLLA BLVD.
RUTHRAUFF RD. TO RIVER RD.
HORIZONTAL CONTROL &
MEDIAN GEOMETRY
FOR LA CHOLLA BLVD.

HDR

HDR Engineering, Inc.
5210 East Williams Circle, Suite 530
Tucson, AZ 85711-4459
(520) 584-3600

Expires 03-31-2011

No.	Revision Description	Engineer	Date

		Date
Designed	L. Barela / J. Bennett	July/2009
Drawn	J. Amos	July/2009
Checked	R. Brittain	July/2009
Proj. Engr.	L. Barela	Aug/2009

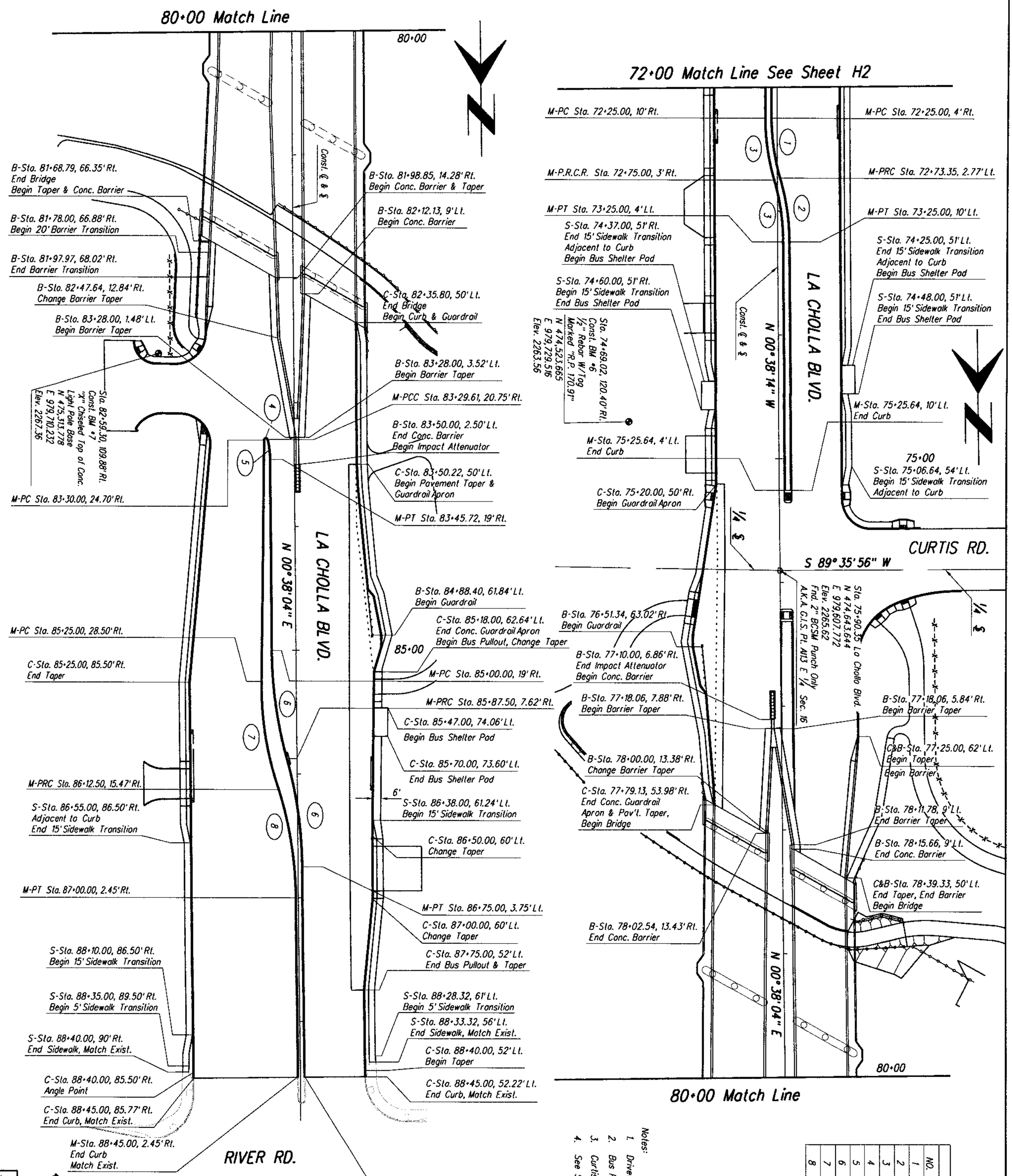

Notes:

1. Driveways, See Details R1, R2 & Roadway Plans.
2. Bus Pullouts, See Detail R7.
3. Curtis Road Horizontal Control, See Sheet H4.
4. See Sheets H4 and H5 for Information Not Shown.

B	Barrier
C	Curb
M	Median
P	Pavement
S	Sidewalk

CURVE DATA

NO.	R	Δ	L	T
1	176.07'	15° 56' 21"	48.98'	24.65'
2	188.07'	15° 56' 21"	52.32'	26.33'
3	182.07'	15° 56' 21"	50.65'	25.49'
4	2'	166° 29' 01"	5.81'	16.88'
5	75'	12° 24' 03"	16.23'	8.15'
6	342.23'	14° 48' 50"	88.48'	44.49'
7	265.72'	19° 09' 53"	88.88'	44.86'
8	300.42'	16° 56' 00"	88.79'	44.72'

Scales: Horiz. 1"=40' Vert. 1"=NA

40 0 40 80

Arizona Blue Stake
1-800-STAKE-IT
1-800-782-5348
Call Two Working Days Before You Dig

Pima County Department of Transportation

Priscilla S. Cornelio, P.E., Director

LA CHOLLA BLVD.
RUTHRAUFF RD. TO RIVER RD.
HORIZONTAL CONTROL &
MEDIAN GEOMETRY
FOR LA CHOLLA BLVD.

HDR Engineering, Inc.
5210 East Williams Circle, Suite 530
Tucson, AZ 85711-4459
(520) 584-3600

Expires 03-31-2011

No.	Revision Description	Engineer	Date

		Date
Designed	L. Barela / J. Bennett	July/2009
Drawn	J. Amos	July/2009
Checked	R. Brittain	July/2009
Proj. Engr.	L. Barela	Aug/2009

Notes:

1. See Sheet H3 for Information Not Shown.
2. Curtis Road Horizontal Control, See Sheet H4.
3. See Sheet H7 for Curtis Road Information Not Shown.

CURVE DATA				
NO.	R	Δ	L	T
1	2'	90° 00' 00"	3.14'	2.0'
2	25'	90° 01' 36"	39.28'	25.01'
3	125'	23° 26' 51"	51.15'	25.94'
4	50'	66° 31' 24"	58.05'	32.80'

B	Barrier
C	Curb
M	Median
P	Pavement
S	Sidewalk

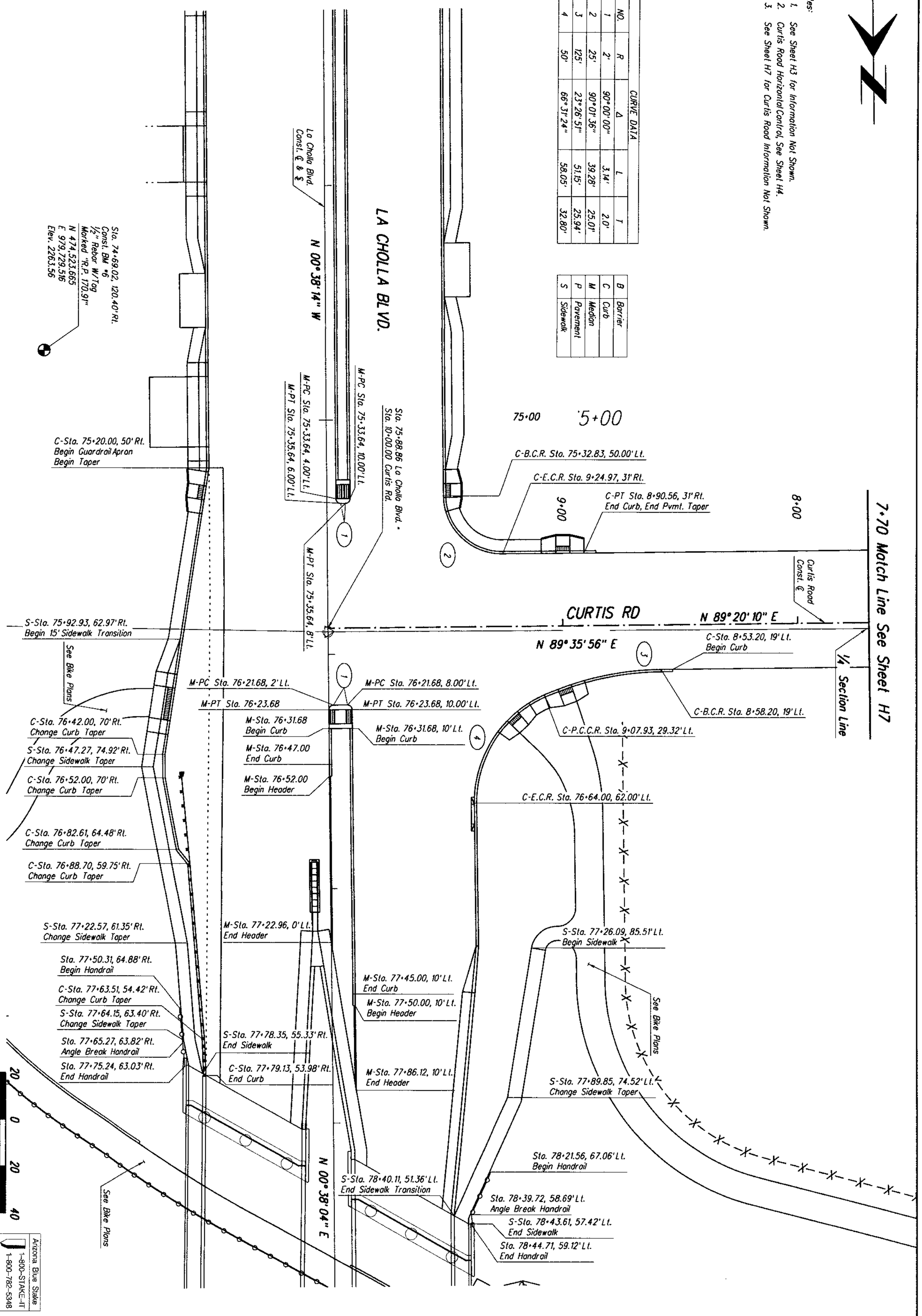

Scales: Horiz. 1" = 20' Vert. 1" = NA

Sheet H4 of H7

Page 95 of 356

Pima County Department of Transportation

Priscilla S. Cornelio, P.E., Director

LA CHOLLA BLVD.
RUTHRAUFF RD. TO RIVER RD.
HORIZONTAL CONTROL &
MEDIAN GEOMETRY
FOR LA CHOLLA BLVD.

HDR

HDR Engineering, Inc.
5210 East Williams Circle, Suite 530
Tucson, AZ 85711-4459
(520) 584-3600

Expires 03-31-2011

No.	Revision Description	Engineer	Date

		Date
Designed	L. Barela / J. Bennett	July/2009
Drawn	A. Ledesma	July/2009
Checked	R. Brittain	July/2009
Proj. Engr.	L. Barela	Aug/2009

08\20\09 4:52:15 PM aledesma

Notes:
1. See Sheet H3 for Information Not Shown.

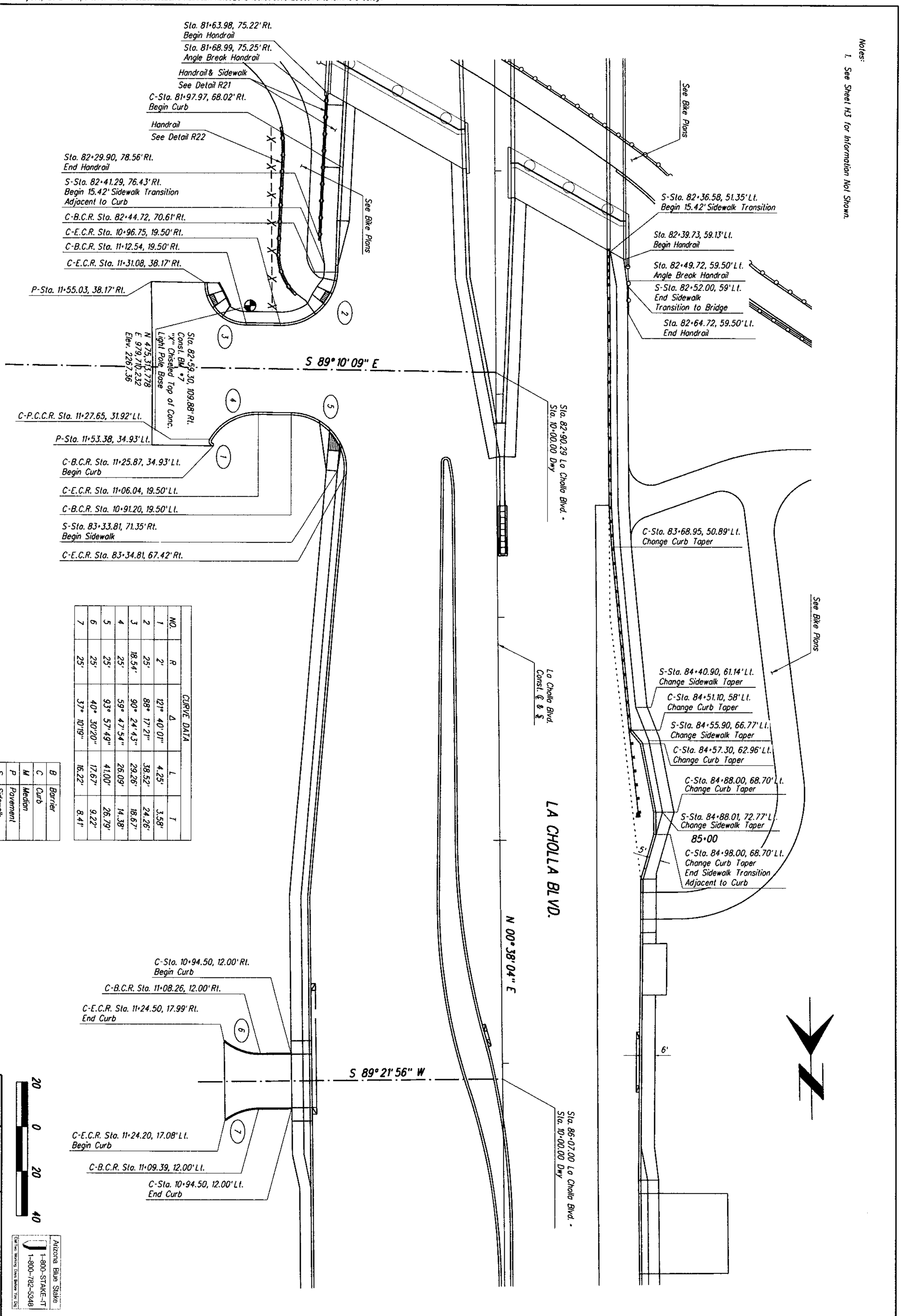

CURVE DATA					
NO.	R	Δ	L	T
1	2'	121° 40' 01"	4.25'	3.58'
2	25'	88° 17' 21"	38.52'	24.26'
3	18.54'	90° 24' 43"	29.26'	18.67'
4	25'	59° 47' 54"	26.09'	14.38'
5	25'	93° 57' 49"	41.00'	26.79'
6	25'	40° 30' 20"	17.67'	9.22'
7	25'	37° 10' 19"	16.22'	8.41'

B	Barrier
C	Curb
M	Median
P	Pavement
S	Sidewalk

Scales: Horiz. 1"=40' Vert. 1"=NA

20 0 20 40

Arizona Blue Stake
1-800-STAKE-IT
1-800-782-5348
Call Two Working Days Before You Dig

Pima County Department of Transportation

Priscilla S. Cornelio, P.E., Director

LA CHOLLA BLVD.
RUTHRAUFF RD. TO RIVER RD.
HORIZONTAL CONTROL &
MEDIAN GEOMETRY
FOR LA CHOLLA BLVD.

HDR
HDR Engineering, Inc.
5210 East Williams Circle, Suite 530
Tucson, AZ 85711-4459
(520) 584-3600

Expires 03-31-2011

No.	Revision Description	Engineer	Date

		Date
Designed	L. Barela/J. Bennett	July/2009
Drawn	A. Ledesma	July/2009
Checked	R. Brittain	July/2009
Proj. Engr.	L. Barela	Aug/2009

Project # 4LCITR

Sheet H5 of H7

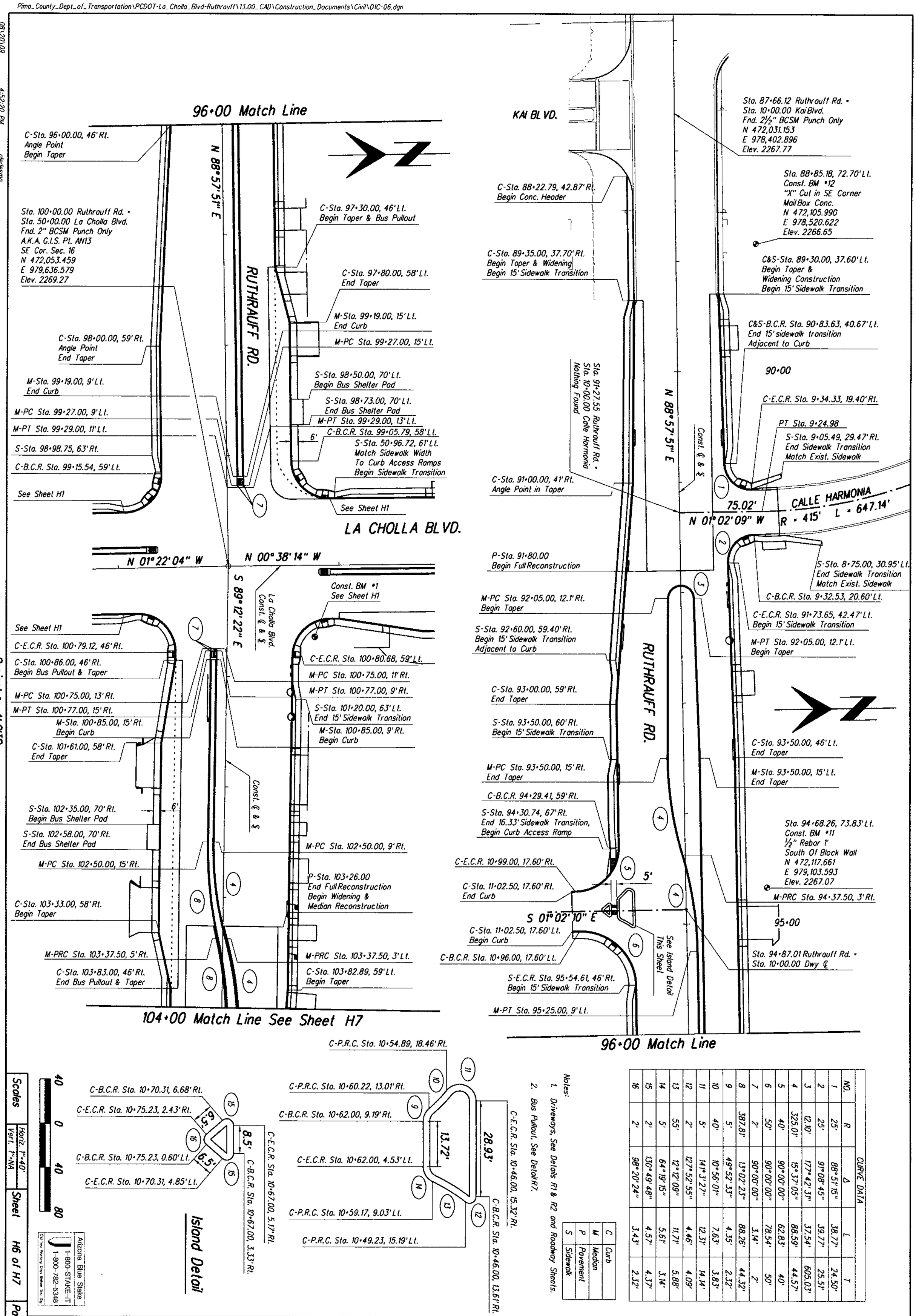

Notes:
1. Driveways, See Details R1 & R2 and Roadway Sheets.
2. Bus Pullout, See Detail R7.

C	Curb
M	Median
P	Pavement
S	Sidewalk

CURVE DATA

NO.	R	Δ	L	T
1	25'	88°51'15"	38.77'	24.50'
2	25'	91°08'45"	39.77'	25.51'
3	12.10'	177°42'31"	37.54'	605.03'
4	325.01'	15°37'05"	88.59'	44.57'
5	40'	90°00'00"	62.83'	40'
6	50'	90°00'00"	78.54'	50'
7	2'	90°00'00"	3.14'	2'
8	387.81'	13°02'23"	88.26'	44.32'
9	5'	49°52'33"	4.35'	2.32'
10	40'	10°56'01"	7.63'	3.83'
11	5'	141°31'27"	12.31'	14.14'
12	2'	127°52'55"	4.46'	4.09'
13	55'	12°12'09"	11.71'	5.88'
14	5'	64°19'15"	5.61'	3.14'
15	2'	130°49'48"	4.57'	4.37'
16	2'	98°20'24"	3.43'	2.32'

Scales: Horiz. 1"=40' Vert. 1"=NA

40 0 40 80

Sheet H6 of H7

Page 97 of 356

Arizona Blue Stake
1-800-STAKE-IT
1-800-782-5348
Call Two Working Days Before You Dig

Pima County Department of Transportation

Priscilla S. Cornelio, P.E., Director

LA CHOLLA BLVD.
RUTHRAUFF RD. TO RIVER RD.
HORIZONTAL CONTROL &
MEDIAN GEOMETRY
FOR RUTHRAUFF RD.

HDR
HDR Engineering, Inc.
5210 East Williams Circle, Suite 530
Tucson, AZ 85711-4459
(520) 584-3600

Expires 03-31-2011

No.	Revision Description	Engineer	Date

		Date
Designed	L. Barela / J. Bennett	July/2009
Drawn	A. Ledesma	July/2009
Checked	R. Brittain	July/2009
Proj. Engr.	L. Barela	Aug/2009

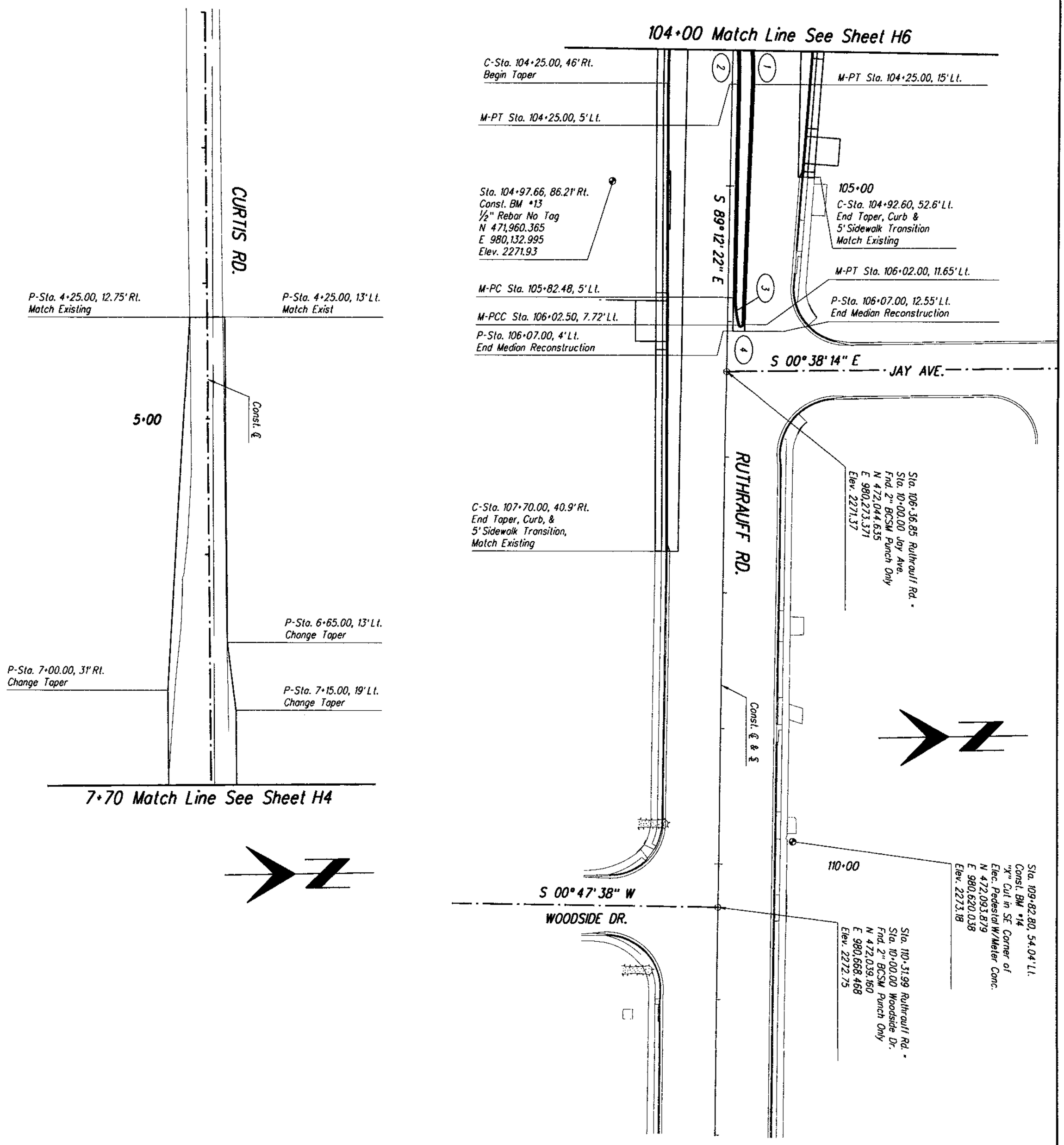

Notes:

1. Driveways, See Details R1, R2 & Roadway Plans.
2. Bus Pullouts, See Detail R7.
3. Curtis Road Horizontal Control, See Sheet H4.

CURVE DATA				
NO.	R	Δ	L	T
1	325.01'	15° 37' 05"	88.59'	44.57'
2	387.81'	13° 02' 23"	88.26'	44.32'
3	75'	15° 28' 32"	20.26'	10.19'
4	2'	163° 26' 20"	5.71'	13.74'

C	Curb
M	Median
P	Pavement
S	Sidewalk

Scales: Horiz. 1"=40' Vert. 1"=NA

40 0 40 80

Arizona Blue Stake
1-800-STAKE-IT
1-800-782-5348
(Call Two Working Days Before You Dig)

Sheet H7 of H7

Page 98 of 356

Pima County Department of Transportation

Priscilla S. Cornelio, P.E., Director

LA CHOLLA BLVD.:
RUTHRAUFF RD. TO RIVER RD.
HORIZONTAL CONTROL &
MEDIAN GEOMETRY
FOR RUTHRAUFF RD.

HDR Engineering, Inc.
5210 East Williams Circle, Suite 530
Tucson, AZ 85711-4459
(520) 584-3600

Expires 03-31-2011

No.	Revision Description	Engineer	Date

		Date
Designed	L. Barela / J. Bennett	July/2009
Drawn	A. Ledesma	July/2009
Checked	R. Brittain	July/2009
Proj. Engr.	L. Barela	Aug/2009

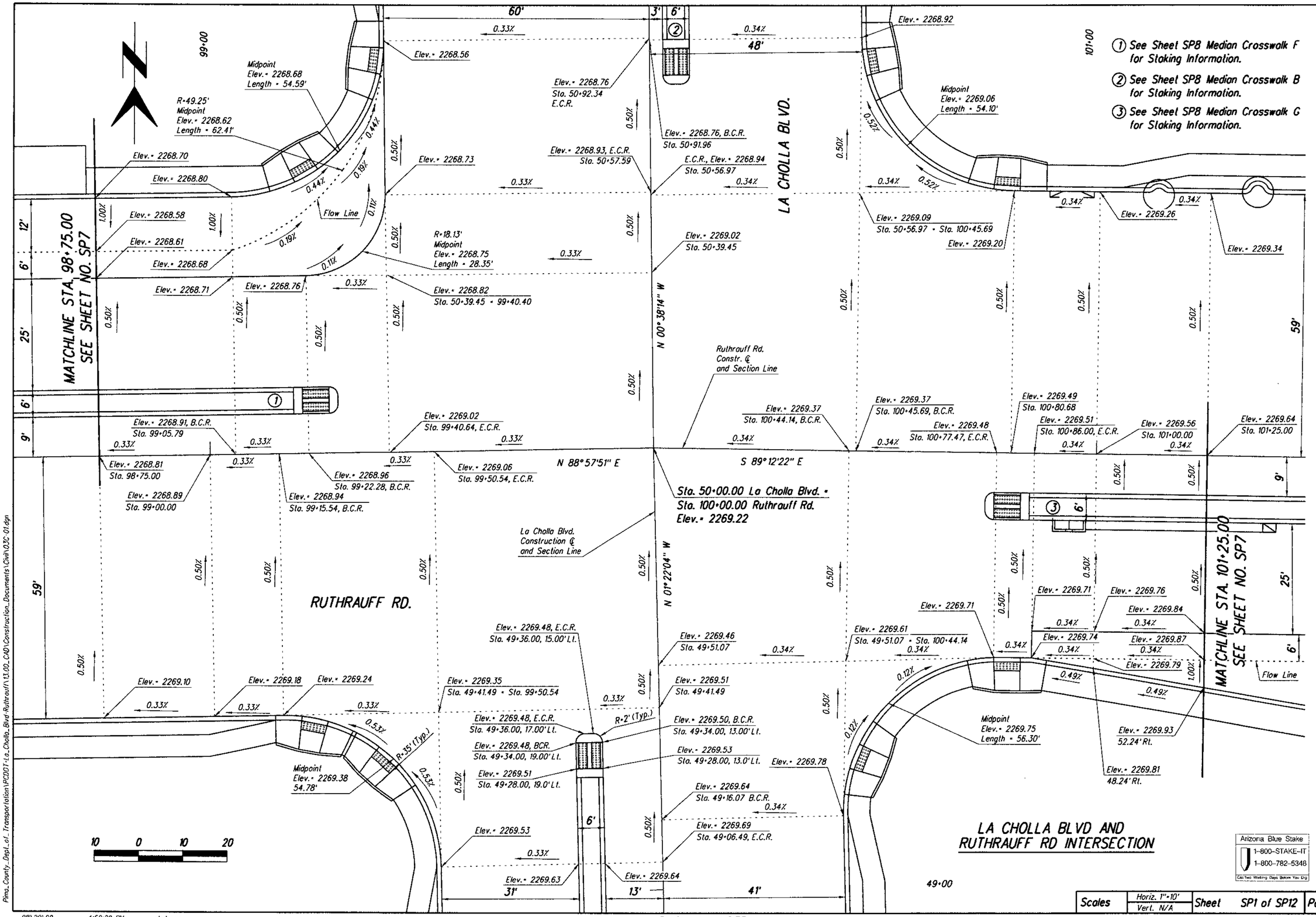

Scales	Horiz. 1"=10' Vert. N/A	Sheet	SP1 of SP12	Page	99 of 356

Project = 4LCITR

Pima County Department of Transportation

Priscilla S. Cornelio, P.E., Director

LA CHOLLA BL VD.
RUTHRAUFF RD. TO RIVER RD.
STAKING PLANS
LA CHOLLA BLVD AND
RUTHRAUFF RD INTERSECTION

No.	Revision Description	Engineer	Date

		Date
Designed	L. Borela	July/2009
Drawn	D. Wostenberg	July/2009
Checked	R. Brittain	July/2009
Proj. Engr.	L. Borela	Aug/2009

Expires 03-31-2011

HDR Engineering, Inc.
5210 East Williams Circle, Suite 530
Tucson, AZ 85711-4459
(520) 584-3500

012145
00000000059914
Pima_County_Dept_of_Transportation\PCDOT-La_Cholla_Blvd-Ruthrauff\13.00_CAD\Construction_Documents\Civil\03C-01.dgn

08\20\09 4:52:29 PM aledesma

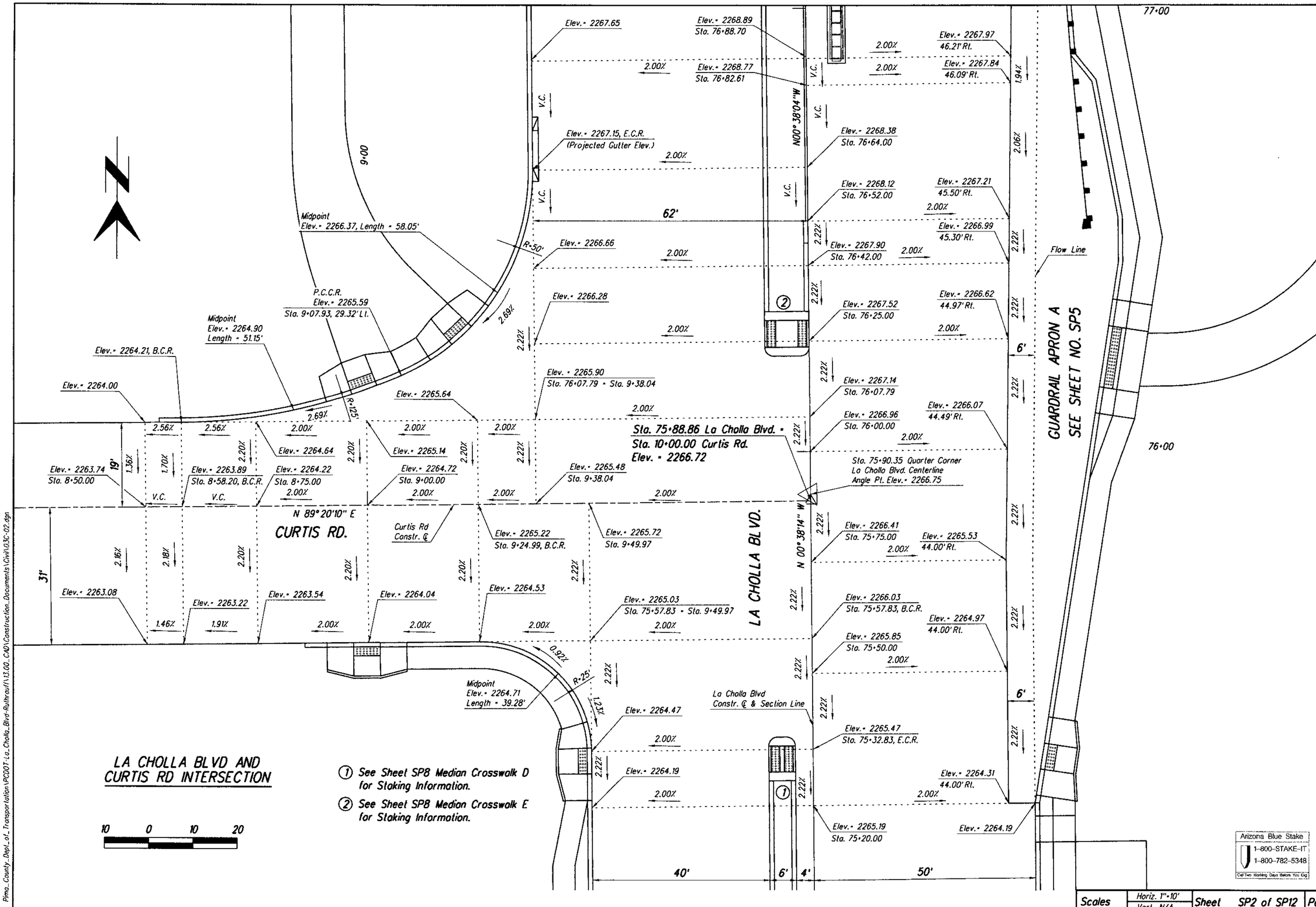
LA CHOLLA BLVD AND
CURTIS RD INTERSECTION
CURTIS RD.
N 89°20'10" E
LA CHOLLA BL VD.
N 00°38'14" W
N00°38'04"W
Sta. 75+88.86 La Cholla Blvd. =
Sta. 10+00.00 Curtis Rd.
Elev. = 2266.72
Sta. 75+90.35 Quarter Corner
La Cholla Blvd. Centerline
Angle Pt. Elev.= 2266.75
La Cholla Blvd
Constr. ℄ & Section Line
Curtis Rd
Constr. ℄
Midpoint
Elev.= 2266.37, Length = 58.05'
Midpoint
Elev.= 2264.90
Length = 51.15'
Midpoint
Elev.= 2264.71
Length = 39.28'
P.C.C.R.
Elev.= 2265.59
Sta. 9+07.93, 29.32' Lt.
Elev.= 2264.21, B.C.R.
Elev.= 2264.00
Elev.= 2267.15, E.C.R.
(Projected Gutter Elev.)
Elev.= 2265.90
Sta. 76+07.79 = Sta. 9+38.04
Elev.= 2267.65
Elev.= 2268.89
Sta. 76+88.70
Elev.= 2268.77
Sta. 76+82.61
Elev.= 2268.38
Sta. 76+64.00
Elev.= 2268.12
Sta. 76+52.00
Elev.= 2267.90
Sta. 76+42.00
Elev.= 2267.52
Sta. 76+25.00
Elev.= 2267.14
Sta. 76+07.79
Elev.= 2266.96
Sta. 76+00.00
Elev.= 2266.41
Sta. 75+75.00
Elev.= 2266.03
Sta. 75+57.83, B.C.R.
Elev.= 2265.85
Sta. 75+50.00
Elev.= 2265.47
Sta. 75+32.83, E.C.R.
Elev.= 2265.19
Sta. 75+20.00
Elev.= 2267.97
46.21' Rt.
Elev.= 2267.84
46.09' Rt.
Elev.= 2267.21
45.50' Rt.
Elev.= 2266.99
45.30' Rt.
Elev.= 2266.62
44.97' Rt.
Elev.= 2266.07
44.49' Rt.
Elev.= 2265.53
44.00' Rt.
Elev.= 2264.97
44.00' Rt.
Elev.= 2264.31
44.00' Rt.
Elev.= 2264.19
Elev.= 2263.74
Sta. 8+50.00
Elev.= 2263.89
Sta. 8+58.20, B.C.R.
Elev.= 2264.22
Sta. 8+75.00
Elev.= 2264.64
Elev.= 2265.14
Sta. 9+00.00
Elev.= 2264.72
Elev.= 2265.48
Sta. 9+38.04
Elev.= 2265.22
Sta. 9+24.99, B.C.R.
Elev.= 2265.72
Sta. 9+49.97
Elev.= 2265.64
Elev.= 2263.08
Elev.= 2263.22
Elev.= 2263.54
Elev.= 2264.04
Elev.= 2264.53
Elev.= 2265.03
Sta. 75+57.83 = Sta. 9+49.97
Elev.= 2264.47
Elev.= 2264.19
Flow Line
GUARDRAIL APRON A
SEE SHEET NO. SP5
77+00
76+00
9+00
R=50'
R=125'
R=25'
62'
19'
31'
6'
6'
40'
6'
4'
50'
2.00%
2.56%
2.69%
2.22%
1.94%
2.06%
1.36%
1.70%
2.20%
2.16%
2.18%
1.46%
1.91%
0.92%
1.23%
V.C.
10 0 10 20
① See Sheet SP8 Median Crosswalk D
for Staking Information.
② See Sheet SP8 Median Crosswalk E
for Staking Information.
Arizona Blue Stake
1-800-STAKE-IT
1-800-782-5348
Call Two Working Days Before You Dig
Priscilla S. Cornelio, P.E., Director
Pima County Department of Transportation
LA CHOLLA BL VD.
RUTHRAUFF RD. TO RIVER RD.
STAKING PLANS
LA CHOLLA BL VD AND
CURTIS RD INTERSECTION
HDR Engineering, Inc.
5210 East Williams Circle, Suite 530
Tucson, AZ 85711-4459
(520) 584-3600
Expires 03-31-2011
Designed L. Barela
Drawn D. Westenberg
Checked R. Britton
Proj. Eng. L. Barela
Date July/2009
Scales Horiz. 1"=10' Vert. N/A
Sheet SP2 of SP12
Page 100 of 356
Project = 4LCITR
08\20\09 4:52:35 PM aledesma
012145
0000000000005914
Pima_County_Dept_of_Transportation\PCDOT-La_Cholla_Blvd-Ruthrauff\13.00_CAD\Construction_Documents\Civil\03C-02.dgn

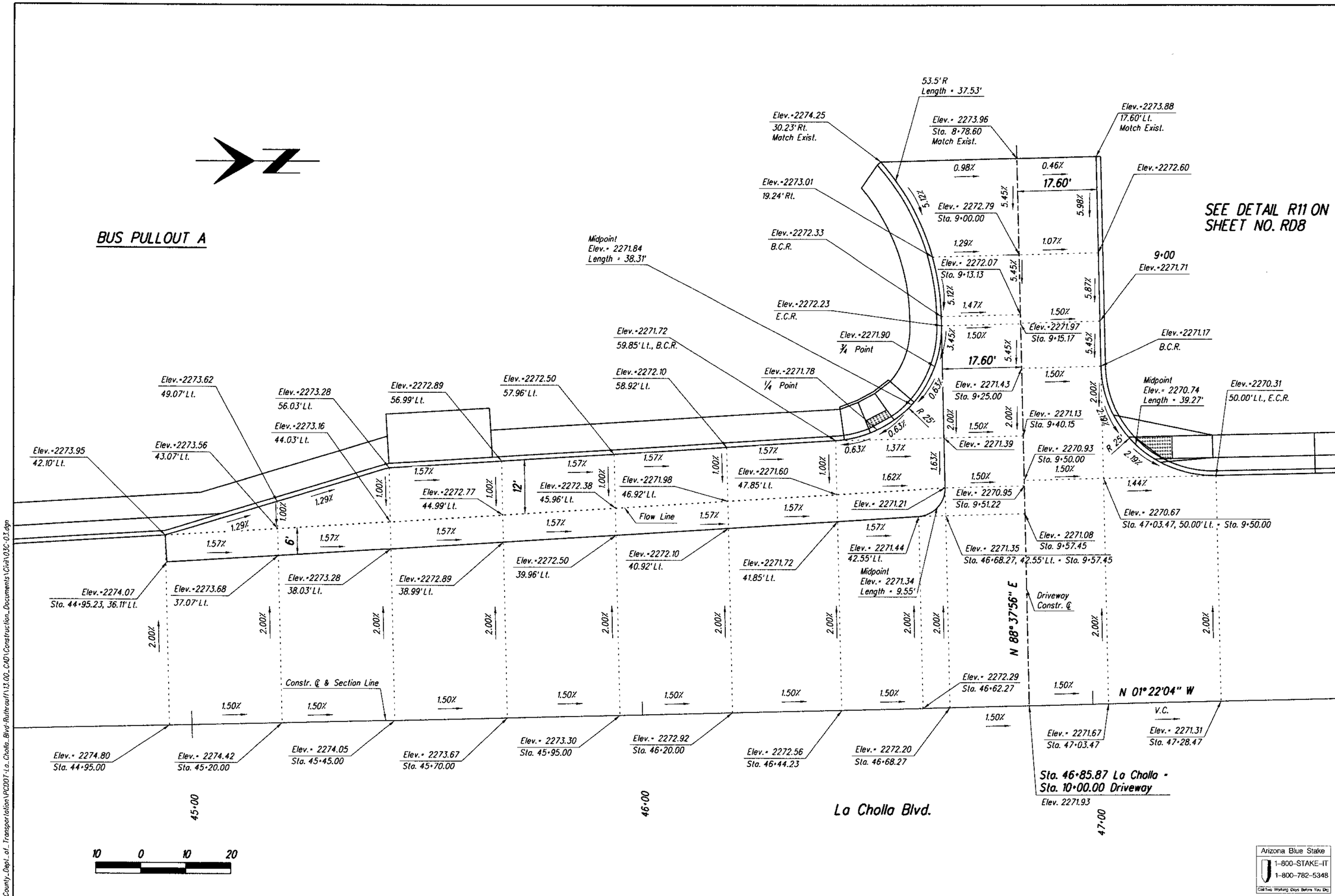

No.	Revision Description	Engineer	Date

		Date
Designed	L. Borela	July/2009
Drawn	D. Wostenberg	July/2009
Checked	R. Britton	July/2009
Proj. Engineer	L. Borela	Aug/2009

Priscilla S. Cornelio, P.E., Director

Pima County Department of Transportation

HDR Engineering, Inc.
5210 East Williams Circle, Suite 530
Tucson, AZ 85711-4459
(520) 584-3600

LA CHOLLA BLVD.
RUTHRAUFF RD. TO RIVER RD.
STAKING PLANS
BUS PULLOUT A &
DRIVEWAY 46+85.87

Expires 03-31-2011

Scales	Horiz. 1"=10'	Sheet	SP3 of SP12	Page	101 of 356
	Vert. N/A				

012145
00000000005994
Pima_County_Dept. of_Transportation\PCDOT-La_Cholla_Blvd-Ruthrauff\13.00_CAD\Construction_Documents\Civil\03C-03.dgn

08\20\09 4:52:39 PM aledesma

Project • 4LCITR

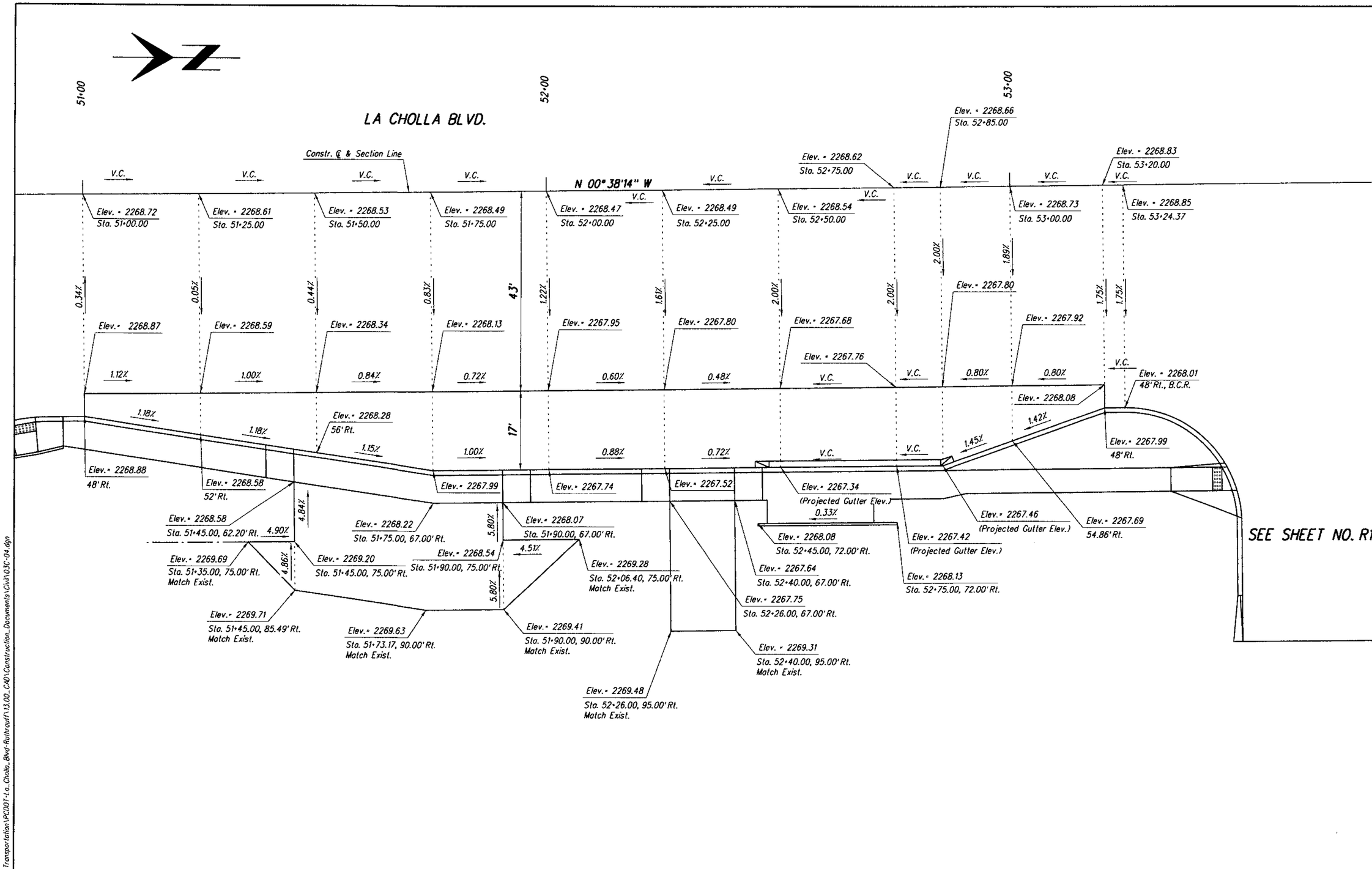

BUS PULLOUT B

Arizona Blue Stake
1-800-STAKE-IT
1-800-782-5348
Call Two Working Days Before You Dig

Scales	Horiz. 1"=10' Vert. N/A	Sheet SP4 of SP12	Page 102 of 356

Project # 4LCITR

Pima County Department of Transportation

Priscilla S. Cornelio, P.E., Director

No.	Revision Description	Engineer	Date

		Date
Designed	L. Barela	July/2009
Drawn	D. Wastenberg	July/2009
Checked	R. Britton	July/2009
Proj. Engr.	L. Barela	Aug/2009

REGISTERED PROFESSIONAL ENGINEER (CIVIL) 37267 L.E. BARELA ARIZONA, U.S.A.
Expires 03-31-2011

HDR Engineering, Inc.
5210 East Williams Circle, Suite 530
Tucson, AZ 85711-4459
(520) 584-3600

LA CHOLLA BLVD.
RUTHRAUFF RD. TO RIVER RD.
STAKING PLANS
BUS PULLOUT B

012145
00000000005914
Pima_County_Dept_of_Transportation\PCDOT-La_Cholla_Blvd-Ruthrauff\13.00_CAD\Construction_Documents\Civil\03C-04.dgn

08\20\09 4:52:44 PM aledesma

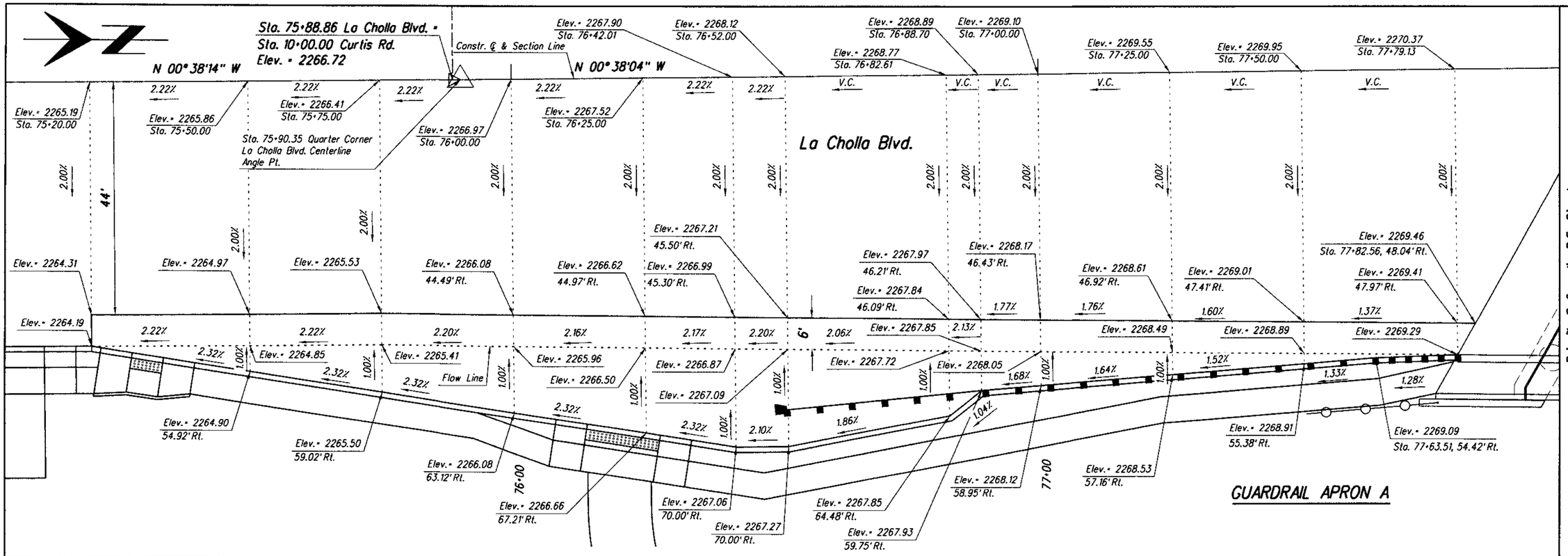

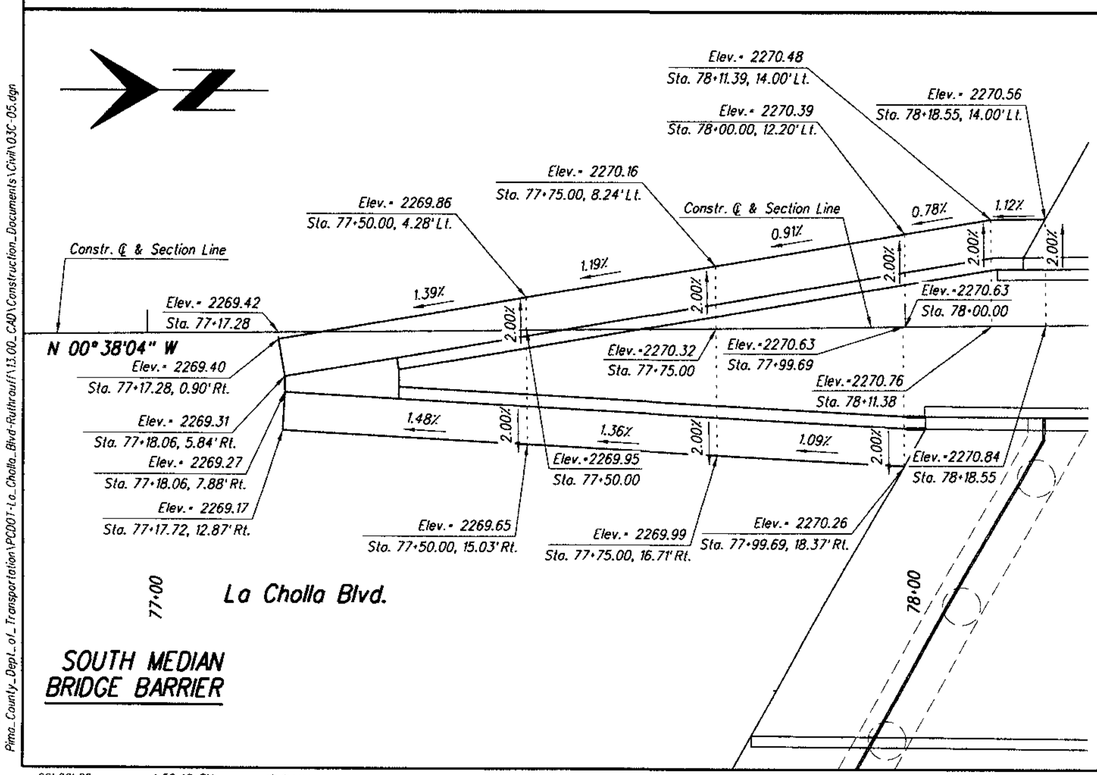

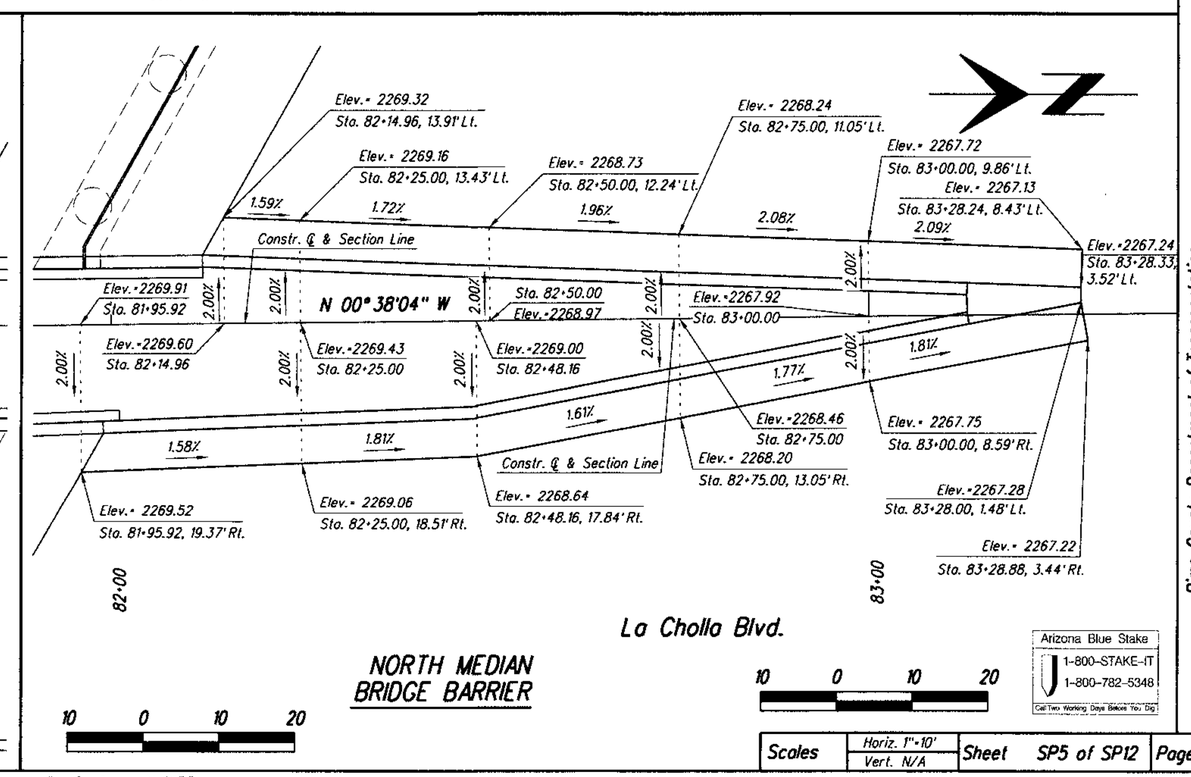

Arizona Blue Stake
1-800-STAKE-IT
1-800-782-5348
Call Two Working Days Before You Dig

Scales	Horiz. 1"=10'	Sheet	SP5 of SP12	Page	103 of 356
	Vert. N/A				

Project • 4LCITR

Pima County Department of Transportation

Priscilla S. Cornelio, P.E., Director

LA CHOLLA BLVD.
RUTHRAUFF RD. TO RIVER RD.
STAKING PLANS
GUARDRAIL APRON A
AND MEDIAN BRIDGE BARRIER

HDR Engineering, Inc.
5210 East Williams Circle, Suite 530
Tucson, AZ 85711-4459
(520) 584-3600

Expires 03-31-2011

No.	Revision Description	Engineer	Date

		Date
Designed	L. Barela	July/2009
Drawn	D. Wostenberg	July/2009
Checked	R. Brittain	July/2009
Proj. Engr.	L. Barela	Aug/2009

012145
00000000005939914
Pima_County_Dept_of_Transportation\PC001-La_Cholla_Blvd-Ruthrauff\13.00_CAD\Construction_Documents\Civil\03C-05.dgn

08\20\09 4:52:48 PM aledesma

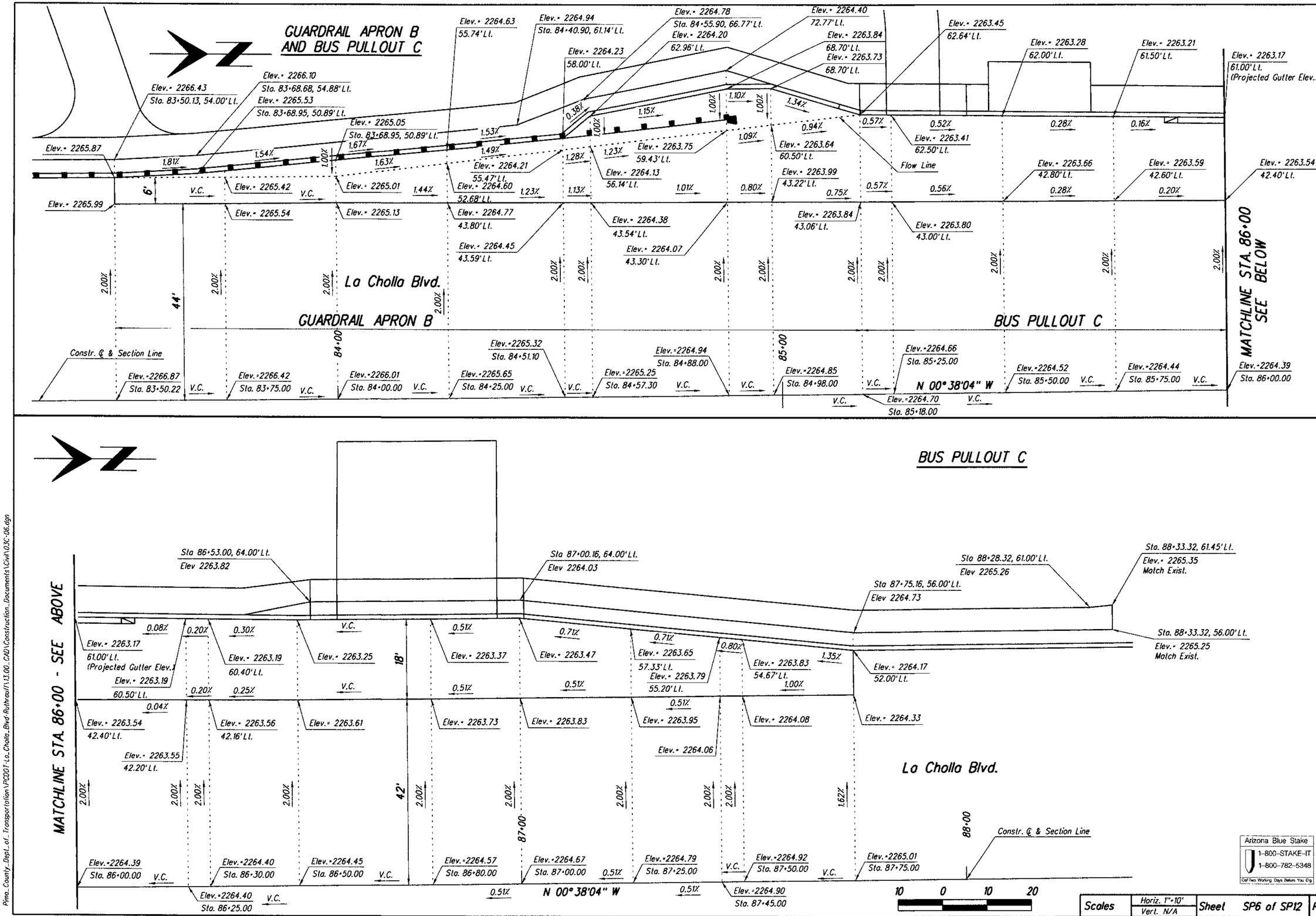

Arizona Blue Stake
1-800-STAKE-IT
1-800-782-5348
Call Two Working Days Before You Dig

Scales	Horiz. 1"=10' Vert. N/A	Sheet SP6 of SP12	Page 104 of 356

Project • 4LCITR

Pima County Department of Transportation

LA CHOLLA BLVD.
RUTHRAUFF RD. TO RIVER RD.
STAKING PLANS
GUARDRAIL APRON B
AND BUS PULLOUT C

HDR Engineering, Inc.
5210 East Williams Circle, Suite 530
Tucson, AZ 85711-4459
(520) 394-3600

Expires 03-31-2011

Designed	L. Barela	July/2009
Drawn	D. Wostenberg	July/2009
Checked	R. Britton	July/2009
Proj. Engr.	L. Barela	Aug/2009

Date

No.	Revision Description	Engineer	Date

Priscilla S. Cornelio, P.E., Director

012145
0000000000059914
Pima_County_Dept._of_Transportation\PC001-La_Cholla_Blvd-Ruthrauff\13.00_CAD\Construction_Documents\Civil\03C-06.dgn

08\20\09 4:52:54 PM aledesma

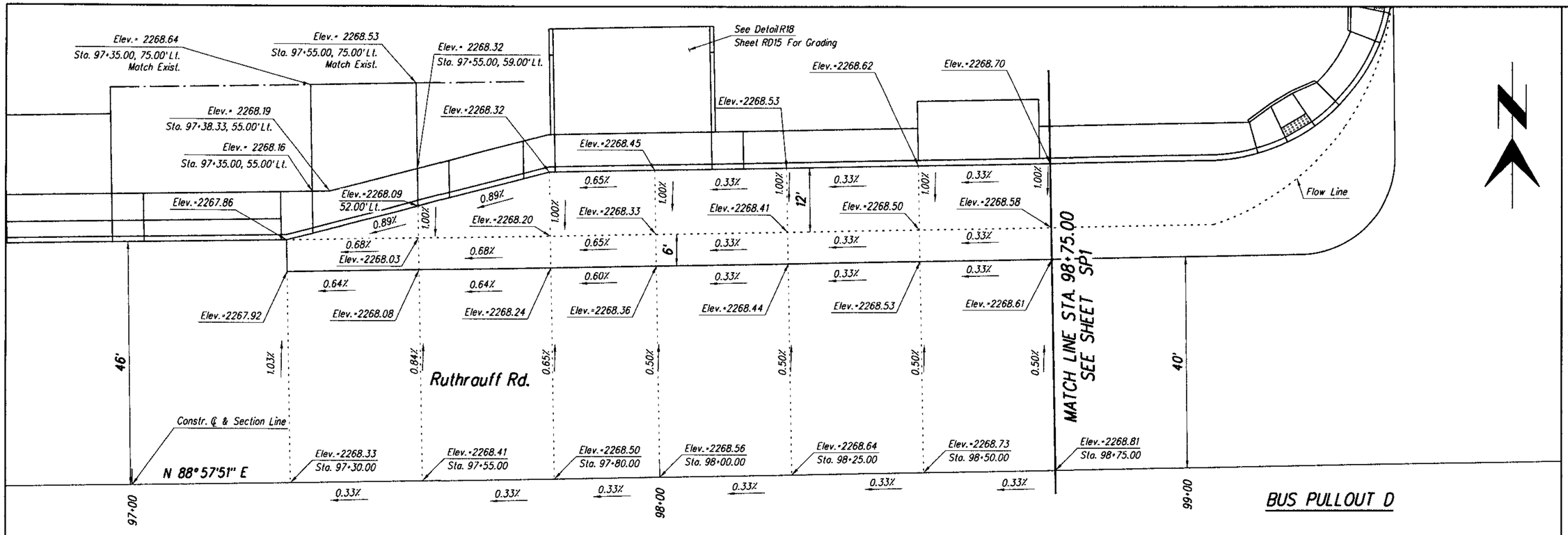

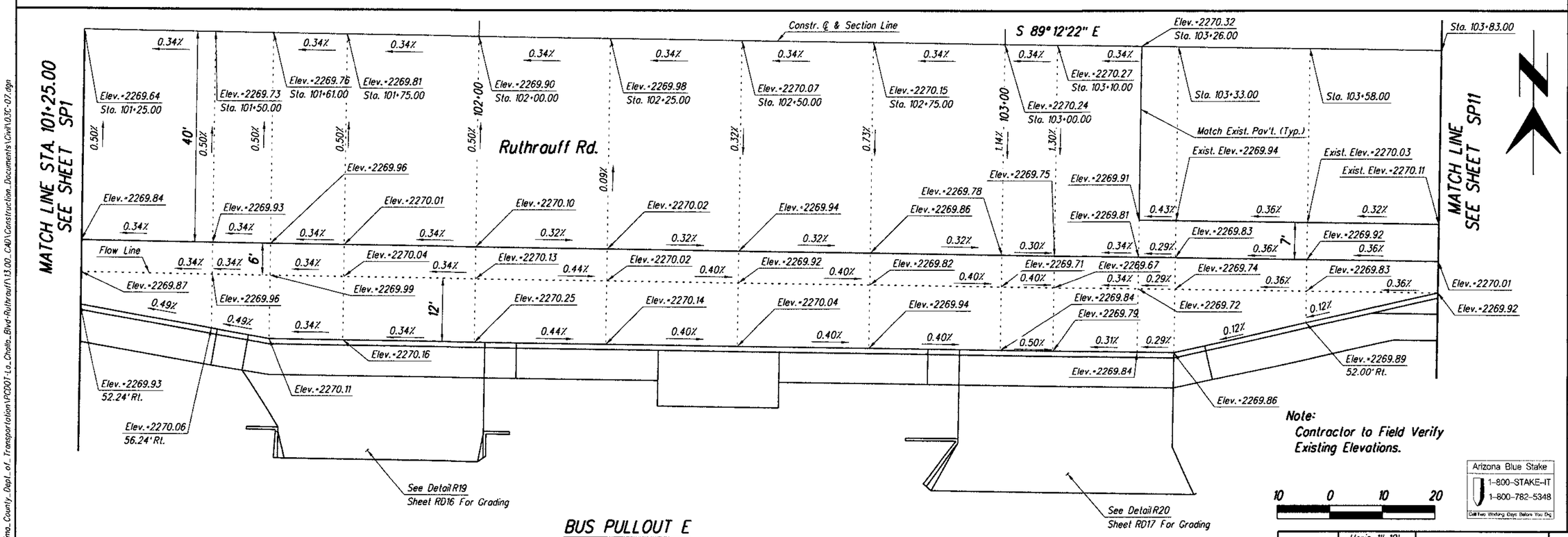

Note:
Contractor to Field Verify
Existing Elevations.

10 0 10 20

Arizona Blue Stake
1-800-STAKE-IT
1-800-782-5348
Call Two Working Days Before You Dig

Scales	Horiz. 1"=10'	Sheet	SP7 of SP12	Page	105 of 356
	Vert. N/A				

Project # 4LCITR

Pima County Department of Transportation

LA CHOLLA BL VD.
RUTHRAUFF RD. TO RIVER RD.
STAKING PLANS
BUS PULLOUTS D AND E

HDR Engineering, Inc.
5210 East Williams Circle, Suite 530
Tucson, AZ 85711-4459
(520) 584-3600

Expires 03-31-2011

Priscilla S. Cornelio, P.E., Director

Designed	L. Barela	July/2009
Drawn	D. Wostenberg	July/2009
Checked	R. Brittain	July/2009
Proj. Engr.	L. Barela	Aug/2009

No.	Revision Description	Engineer	Date

012145
00000000059914
Pima_County_Dept_of_Transportation\PCDOT-La_Cholla_Blvd-Ruthrauff\13.02_CAD\Construction_Documents\Civil\0.3C-07.dgn

08\20\09 4:52:58 PM aledesma

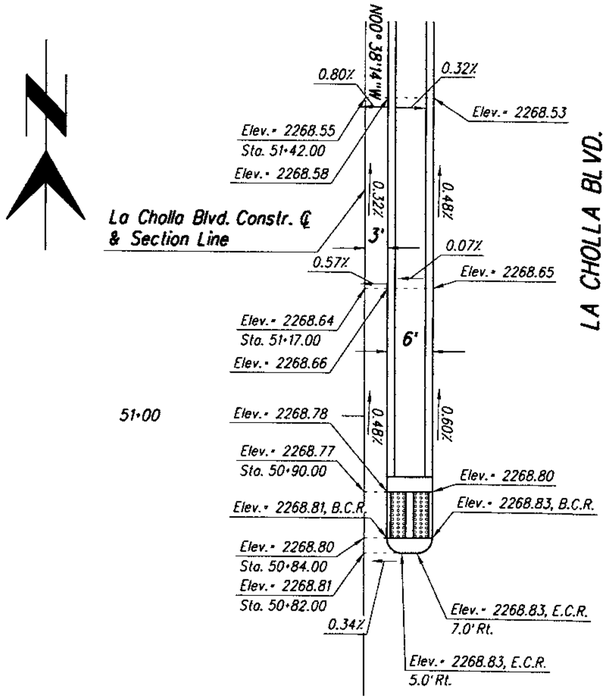

SB LT. TURN
LA CHOLLA BLVD./RUTHRAUFF RD.
Median Crosswalk B Sta. 50+82.00, 6' Rt.

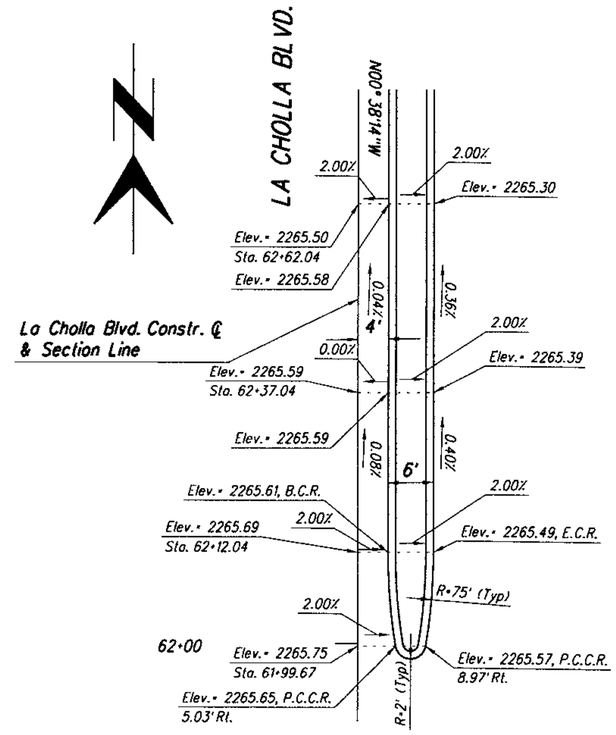

SB LT. TURN
LA CHOLLA BLVD./JAY AVE
Median Nose C Sta. 62+00.00, 7' Rt.

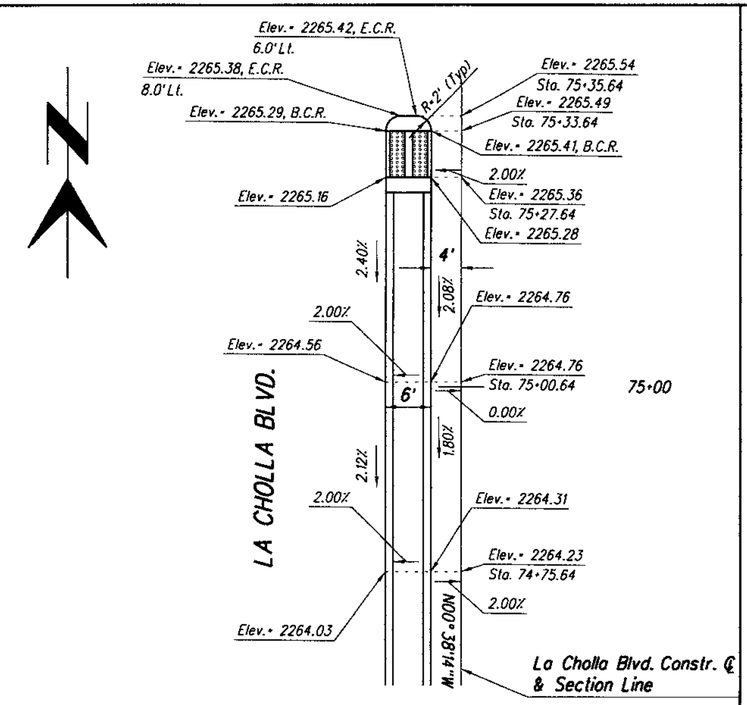

NB LT. TURN
LA CHOLLA BLVD./CURTIS RD.
Median Crosswalk D Sta. 75+35.64, 7' Lt.

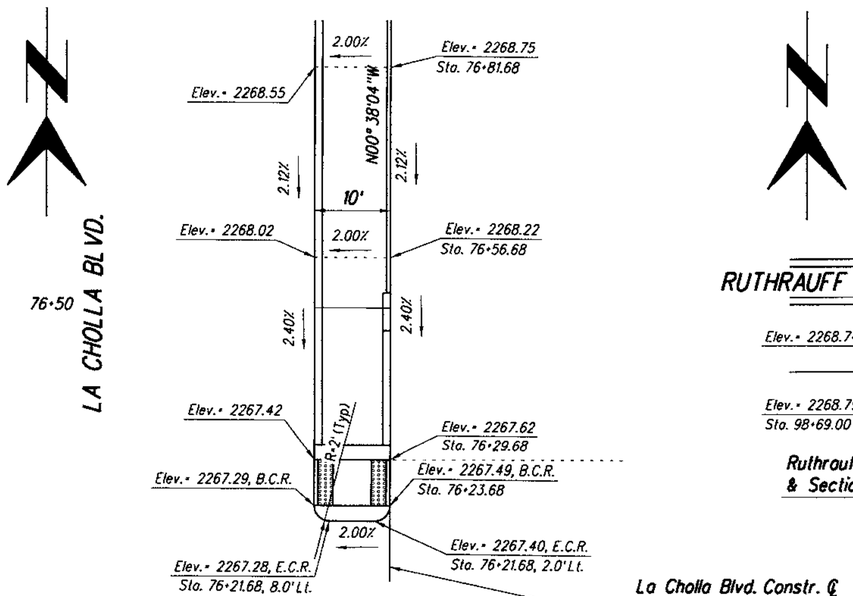

LA CHOLLA BLVD. MEDIAN
NORTH OF CURTIS RD.
Median Crosswalk E Sta. 76+21.68, 5' Lt.

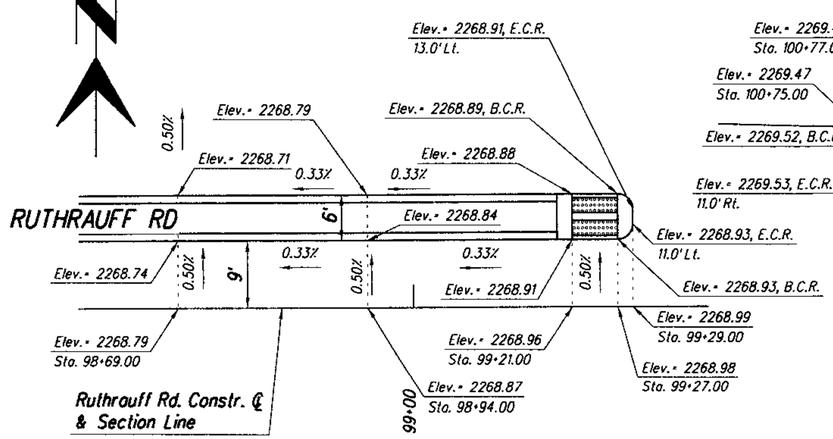

EB LT. TURN
RUTHRAUFF RD./LA CHOLLA BLVD.
Median Crosswalk F Sta. 99+29.00, 12' Lt.

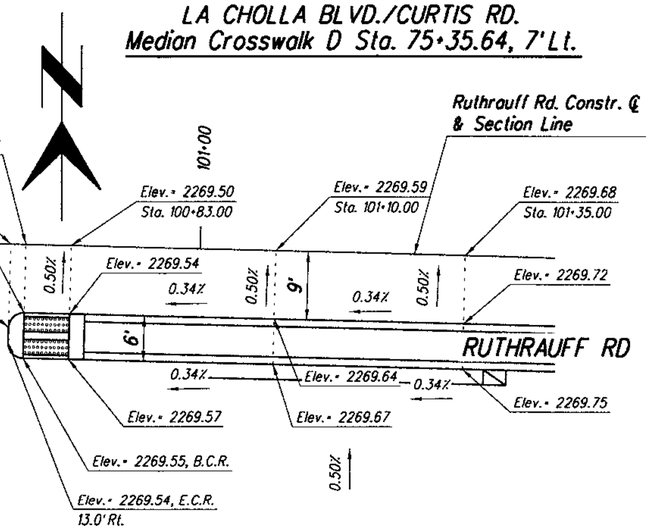

WB LT. TURN
RUTHRAUFF RD./LA CHOLLA BLVD.
Median Crosswalk G Sta. 100+75.00, 12' Rt.

Arizona Blue Stake
1-800-STAKE-IT
1-800-782-5348
Call Two Working Days Before You Dig

10 0 10 20

Scales	Horiz. 1"=10'	Sheet SP8 of SP12	Page 106 of 356
	Vert. N/A		

Project # 4LCITR

Pima County Department of Transportation

LA CHOLLA BLVD.
RUTHRAUFF RD. TO RIVER RD.
STAKING PLANS
MEDIAN CROSSWALKS & NOSES
B THROUGH G

HDR Engineering, Inc.
5210 East Williams Circle, Suite 530
Tucson, AZ 85711-4459
(520) 564-3600

Expires 03-31-2011

No.	Revision Description	Engineer	Date

		Date
Designed	L. Barela	July/2009
Drawn	D. Wostenberg	July/2009
Checked	R. Brillson	July/2009
Proj. Engr.	L. Barela	Aug/2009

Priscilla S. Cornelio, P.E., Director

012145
00000000005991 4
Pima_County_Dept_of_Transportation\PCDOT-La_Cholla_Blvd-Ruthrauff\13.00_CAD\Construction_Documents\Civil\03C-08.dgn

08\20\09 4:53:03 PM aledesma

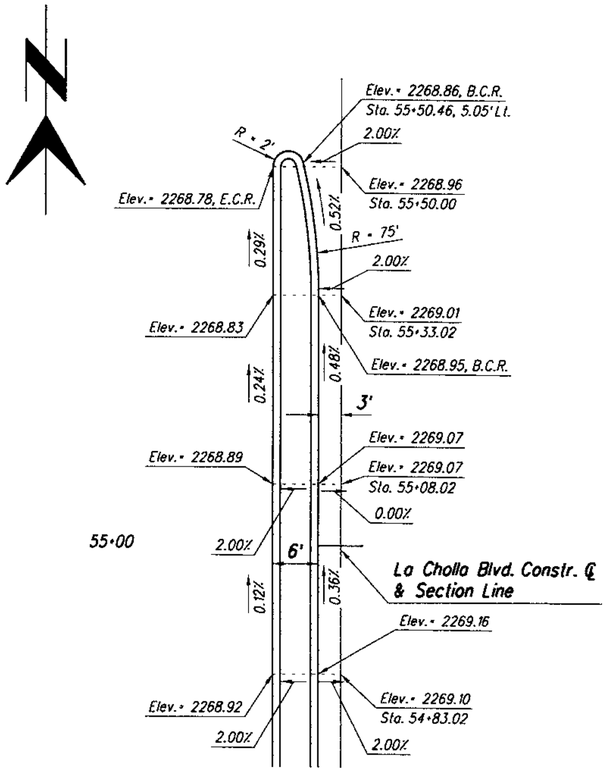

NB LT. TURN
LA CHOLLA BLVD./CALLE NARCISO
Median Nose H Sta. 55+50.00, 7' Lt.

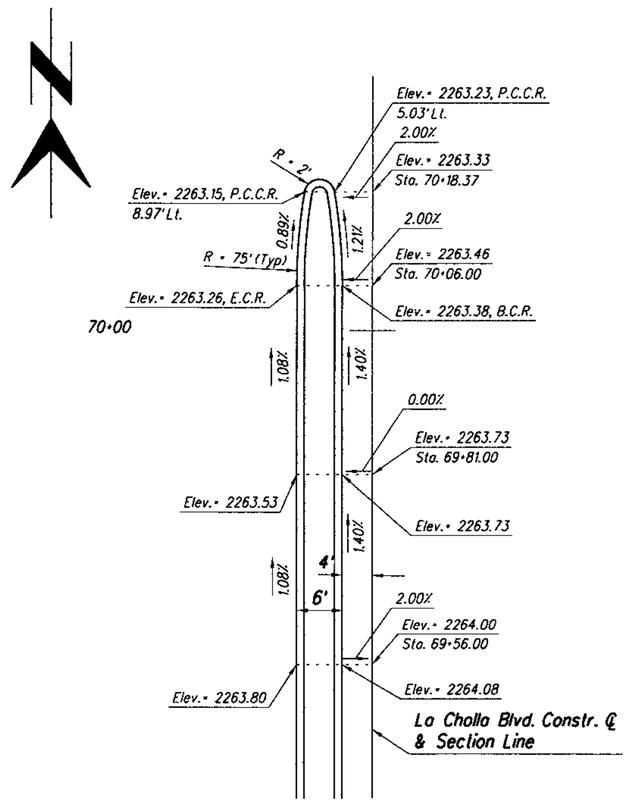

NB LT. TURN
LA CHOLLA BLVD./DRIVEWAY
Median Nose I Sta. 70+64.00

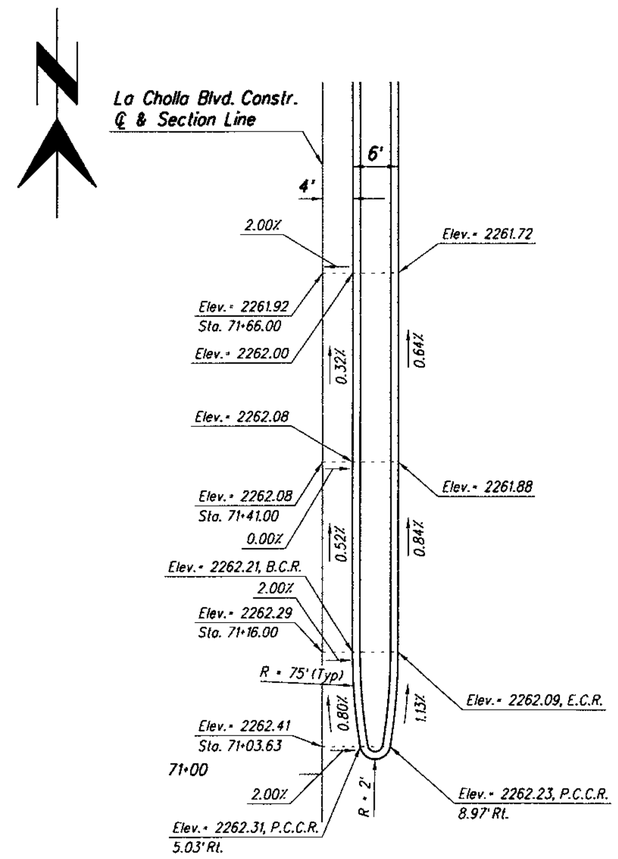

SB LT. TURN
LA CHOLLA BLVD./DRIVEWAY
Median Nose J Sta. 70+64.00

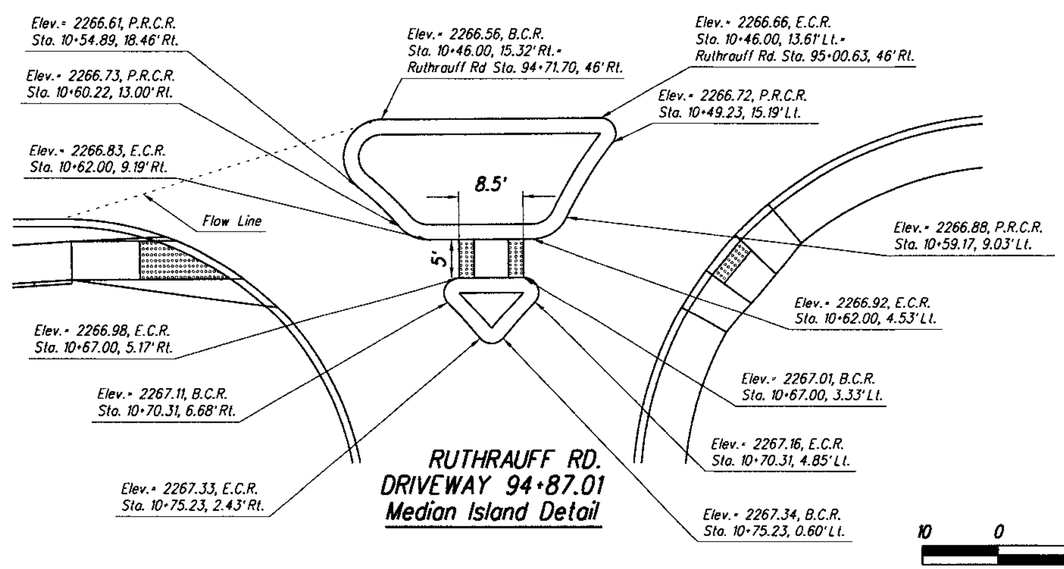

RUTHRAUFF RD.
DRIVEWAY 94+87.01
Median Island Detail

Note:
See Detail R17 for outside curb grading information.
See Detail on H6 for median curve information.

10 0 10 20

Arizona Blue Stake
1-800-STAKE-IT
1-800-782-5348
Call Two Working Days Before You Dig

Designed	L. Barela	July/2009
Drawn	D. Westenberg	July/2009
Checked	R. Britton	July/2009
Proj. Engr.	L. Barela	Aug/2009

No.	Revision Description	Engineer	Date

Priscilla S. Cornelio, P.E., Director

Pima County Department of Transportation

LA CHOLLA BLVD.
RUTHRAUFF RD. TO RIVER RD.
STAKING PLANS
MEDIAN NOSES H THROUGH J
AND MEDIAN ISLAND DETAIL

HDR Engineering, Inc.
5210 East Williams Circle, Suite 530
Tucson, AZ 85711-4459
(520) 584-3600

Expires 03-31-2011

Scales: Horiz. 1" = 10' Vert. N/A

Sheet SP9 of SP12 Page 107 of 356

Project = 4LCITR

012145
00000000005991 4
Pima_County_Dept._of_Transportation\PCDOT-La_Cholla_Blvd-Ruthrauff\13.00_CAD\Construction_Documents\Civil\03C-09.dgn

08\20\09 4:53:08 PM cledesma

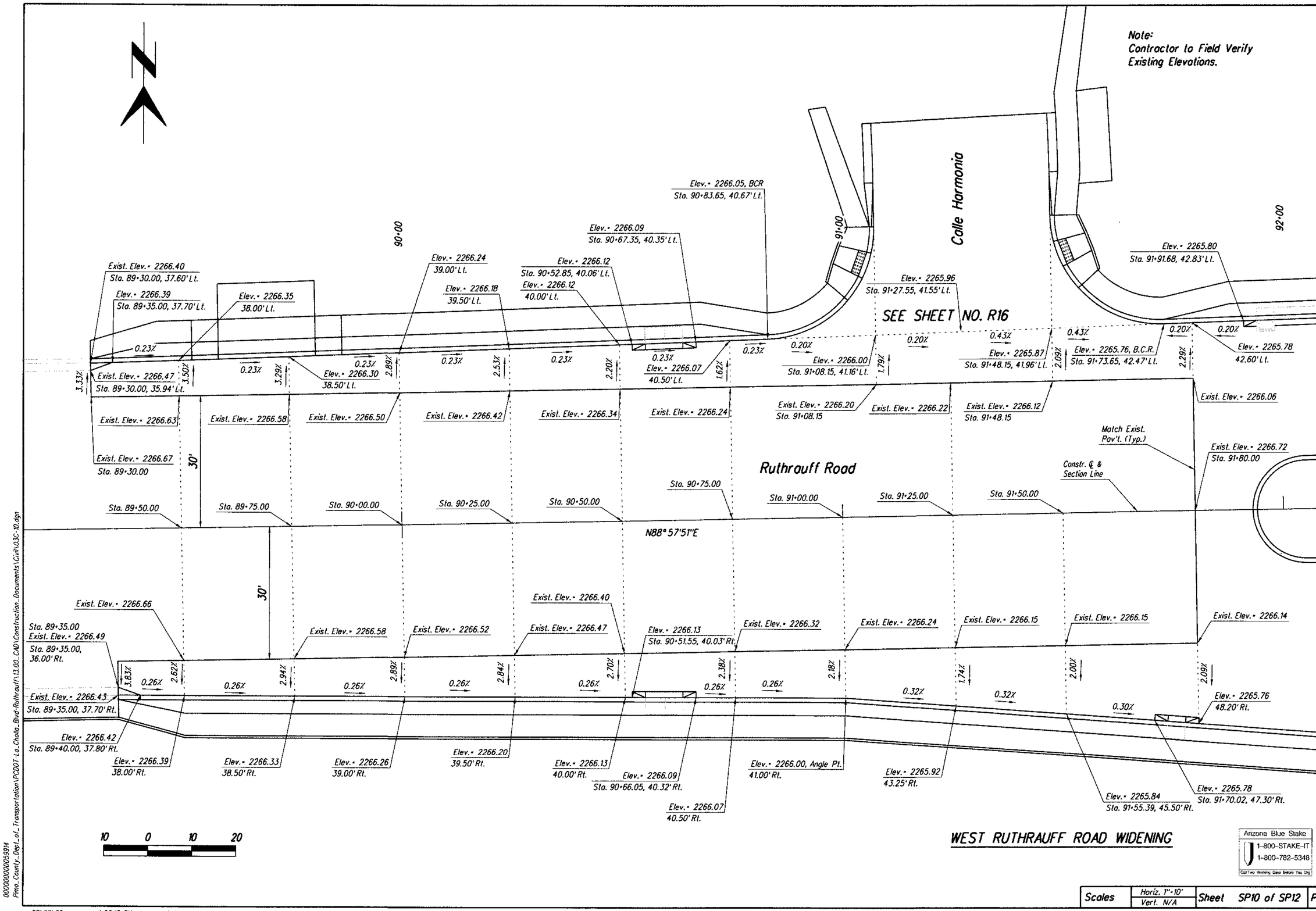

No.	Revision Description	Engineer	Date

		Date
Designed	L. Barela	July 2009
Drawn	D. Westenberg	July 2009
Checked	R. Britton	July 2009
Proj. Eng.	L. Barela	Aug 2009

Priscilla S. Cornelio, P.E., Director

Pima County Department of Transportation

HDR Engineering, Inc.
5210 East Williams Circle, Suite 530
Tucson, AZ 85711-4459
(520) 584-3600

LA CHOLLA BL VD.
RUTHRAUFF RD. TO RIVER RD.
STAKING PLANS
WEST RUTHRAUFF ROAD WIDENING

Expires 03-31-2011

Scales	Horiz. 1"=10' Vert. N/A	Sheet SP10 of SP12	Page 108 of 356

012145
000000000053914
Pima_County_Dept_of_Transportation\PCDOT-La_Cholla_Blvd-Ruthrauff\13.00_CAD\Construction_Documents\Civil\03C-10.dgn

08\20\09 4:53:13 PM aledesma

Project • 4LCITR

Note:
Contractor to Field Verify
Existing Elevations.

104+00
105+00
106+00

Elev.= 2269.26
Elev.= 2269.45
Sta 103+82.89
Elev.= 2269.50
58.00' Lt.
Elev.= 2269.58
56.54' Lt.
Elev.= 2269.65
55.08' Lt.
Elev.= 2269.73
53.63' Lt.
Elev.= 2269.77
Sta. 104+88.45, 52.84' Lt.
Exist. Elev.= 2269.78
Sta. 104+92.60, 52.60' Lt.
Exist. Elev.= 2269.85
Sta. 104+92.60
Exist. Elev.= 2269.84

2.00% 0.34% 1.89% 0.34% 1.67% 0.30% 1.88% 0.30% 2.29% 0.30% 2.76% 0.30% 3.03% 0.30%
Elev.= 2269.37
9'

Exist. Elev.= 2269.44
Exist. Elev.= 2269.54
Exist. Elev.= 2269.60
Exist. Elev.= 2269.65
Exist. Elev.= 2269.73
Exist. Elev.= 2269.79

Exist. Elev.= 2270.34, PC
1.04' Lt.
Exist. Elev.= 2270.37, PRC
Sta 103+37.23, 3.96' Lt.
Exist. Elev.= 2270.39
9.04' Lt.
Exist. Elev.= 2270.38
13.28' Lt.
Exist. Elev.= 2270.39
15.04' Lt.
Exist. Elev.= 2270.46, PT
16.00' Lt.
Exist. Elev.= 2270.57
15.53' Lt.
Exist. Elev.= 2270.68
15.05' Lt.
Exist. Elev.= 2270.77
14.58' Lt.
Exist. Elev.= 2270.84
14.11' Lt.
Exist. Elev.= 2271.02
13.16' Lt.
Exist. Elev.= 2270.92
13.63' Lt.
Exist. Elev.= 2271.14
Sta. 106+07.00, 12.55' Lt.
Elev.= 2271.15, PC
Sta. 106+02.00, 11.65' Lt.

324.01' R
326.01' R
50'

Ruthrauff Road
Exist. Elev.= 2270.75
Const. ℄ & Section Line
Exist. Elev.= 2271.07
Exist. Elev.= 2271.14
Sta 106+00.00
R=2'
R=75'

Sta 103+26.00
Sta 103+58.00
Sta 103+83.00
Sta 104+00.00
Sta 104+25.00
Sta 104+50.00
Sta 104+75.00
Sta 105+00.00
Sta 105+25.00
Sta 105+50.00
Sta 105+75.00
4'
S89° 12'22"E
33'

Exist. Elev.= 2270.47
1.85' Rt.
Exist. Elev.= 2270.40, PRC
Sta 103+37.73, 5.97' Rt.
Exist. Elev.= 2270.33, PC
8.50' Rt.
388.81' R
Exist. Elev.= 2270.54
1.71' Lt.
Exist. Elev.= 2270.59
3.19' Lt.
Exist. Elev.= 2270.68, PT
Exist. Elev.= 2270.85
Exist. Elev.= 2270.91
Exist. Elev.= 2270.97
Constr. ℄ & Section Line
Elev.= 2271.17, PC
Sta. 105+82.48, 5.00' Lt.
Elev.= 2271.22, PCC
Sta. 106+02.50, 7.72' Lt.
Exist. Elev.= 2271.27
Sta. 106+07.00, 4.00' Lt.

Exist. Elev.= 2269.91
Exist. Elev.= 2270.03
Exist. Elev.= 2270.11
Exist. Elev.= 2270.18
Exist. Elev.= 2270.27
Exist. Elev.= 2270.34
Exist. Elev.= 2270.40
Exist. Elev.= 2270.47
Exist. Elev.= 2270.52
Exist. Elev.= 2270.61
Exist. Elev.= 2270.70
Exist. Elev.= 2270.83
Sta. 106+10.00
Exist. Elev.= 2270.79

7'
13'
1.43% 1.50% 1.54% 1.61% 1.66% 1.55% 1.60% 1.39% 1.61% 1.76% 2.02% 2.14%
Elev.= 2270.01
0.33% 0.33% 0.30% 0.30% 0.30% 0.30% 0.30% 0.30% 0.30%

STA 106+10
SEE SHEET NO. SP12

BUS PULLOUT E
SEE SHEET NO. SP7

Elev.= 2269.92
Elev.= 2269.98
Elev.= 2270.06
Elev.= 2270.13
45.63' Rt.
Elev.= 2270.21
45.26' Rt.
Elev.= 2270.25
Sta. 104+89.99, 45.05' Rt.
Elev.= 2270.28
44.89' Rt.
(Projected Gutter Elev.)
Elev.= 2270.36
44.53' Rt.
(Projected Gutter Elev.)
Elev.= 2270.38
Sta. 105+32.48, 44.42' Rt.
Elev.= 2270.43
44.16' Rt.
Elev.= 2270.51
43.79' Rt.
Elev.= 2270.58
43.42' Rt.
Elev.= 2270.61
Sta. 106+10.00, 43.27' Rt.

10 0 10 20

EAST RUTHRAUFF ROAD WIDENING

Arizona Blue Stake
1-800-STAKE-IT
1-800-782-5348
Call Two Working Days Before You Dig

Priscilla S. Cornelio, P.E., Director

No.	Revision Description	Engineer	Date

		Date
Designed	L. Barela	July/2009
Drawn	D. Wastenberg	July/2009
Checked	R. Britton	July/2009
Proj. Engr.	L. Barela	Aug/2009

Expires 03-31-2011

HDR Engineering, Inc.
5210 East Williams Circle, Suite 530
Tucson, AZ 85711-4459
(520) 584-3600

Pima County Department of Transportation

LA CHOLLA BLVD.
RUTHRAUFF RD. TO RIVER RD.
STAKING PLANS
EAST RUTHRAUFF ROAD WIDENING

Scales	Horiz. 1"=10' Vert. N/A	Sheet SP11 of SP12	Page 109 of 356

012145
0000000000059914
Pima_County_Dept_of_Transportation\PCDOT-La_Cholla_Blvd-Ruthrauff\13.00_CAD\Construction_Documents\Civil\03C-11.dgn

08\20\09 4:53:17 PM aledesma

Project • 4LCITR

Note:
Contractor to Field Verify
Existing Elevations.

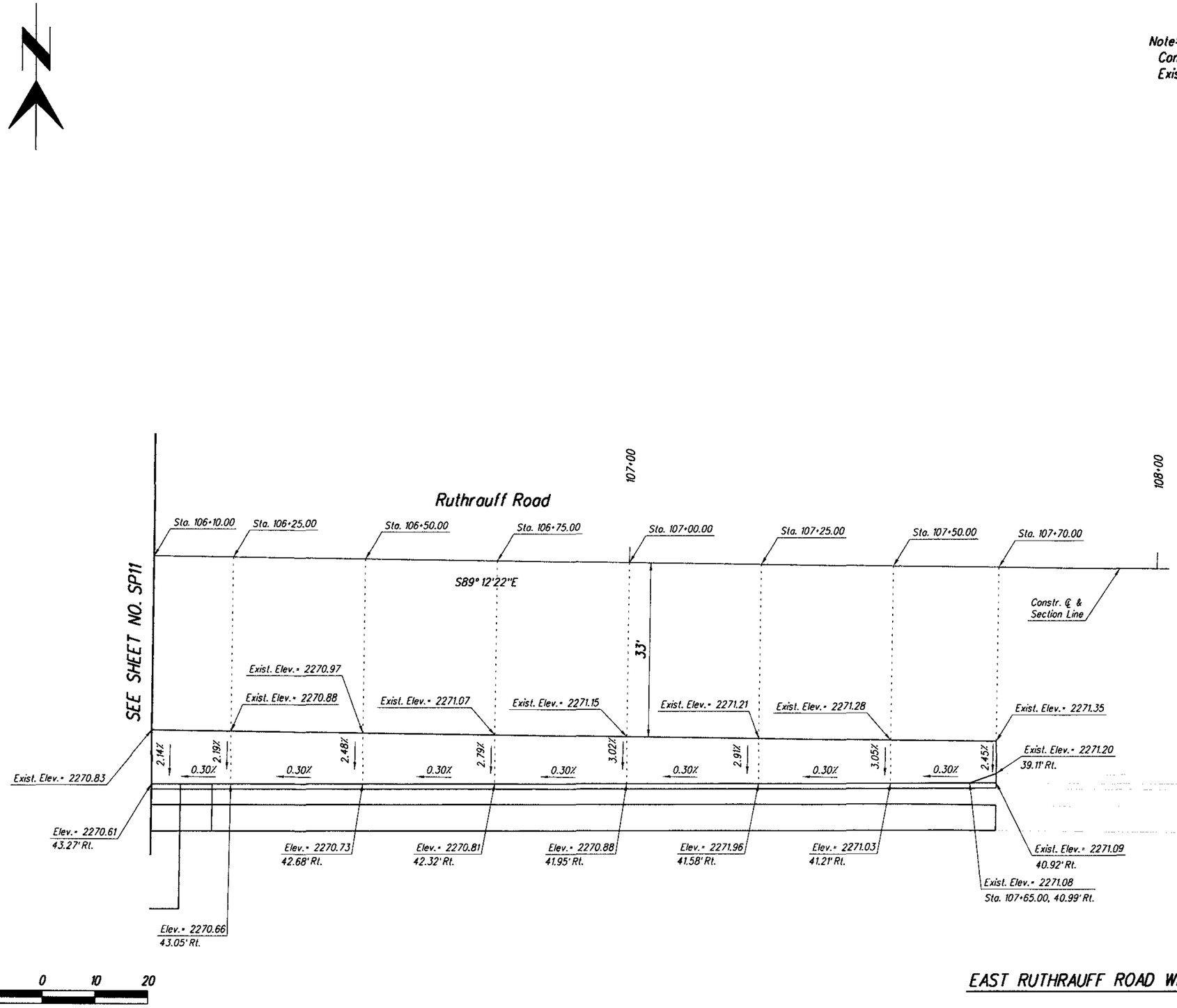

EAST RUTHRAUFF ROAD WIDENING

Arizona Blue Stake
1-800-STAKE-IT
1-800-782-5348
Call Two Working Days Before You Dig

Priscilla S. Cornelio, P.E., Director

Pima County Department of Transportation

No.	Revision Description	Engineer	Date

		Date
Designed	L. Barela	July/2009
Drawn	D. Wastenberg	July/2009
Checked	R. Brilum	July/2009
Proj. Engr.	L. Barela	Aug/2009

REGISTERED PROFESSIONAL ENGINEER (CIVIL) LUIS BARELA 37267 ARIZONA, U.S.A. 8-24-2009

Expires 03-31-2011

HDR Engineering, Inc.
5210 East Williams Circle, Suite 530
Tucson, AZ 85711-4459
(520) 584-3600

LA CHOLLA BLVD.
RUTHRAUFF RD. TO RIVER RD.
STAKING PLANS
EAST RUTHRAUFF ROAD WIDENING

Scales	Horiz. 1"=10'	Sheet	SP12 of SP12	Page	110 of 356
	Vert. N/A				

012145
0000000005994
Pima_County_Dept_of_Transportation\PCDOT-La_Cholla_Blvd-Ruthrauff\13.00_CAD\Construction_Documents\Civil\03C-12.dgn

08\20\09 4:53:22 PM aledesma

Project • 4LCITR

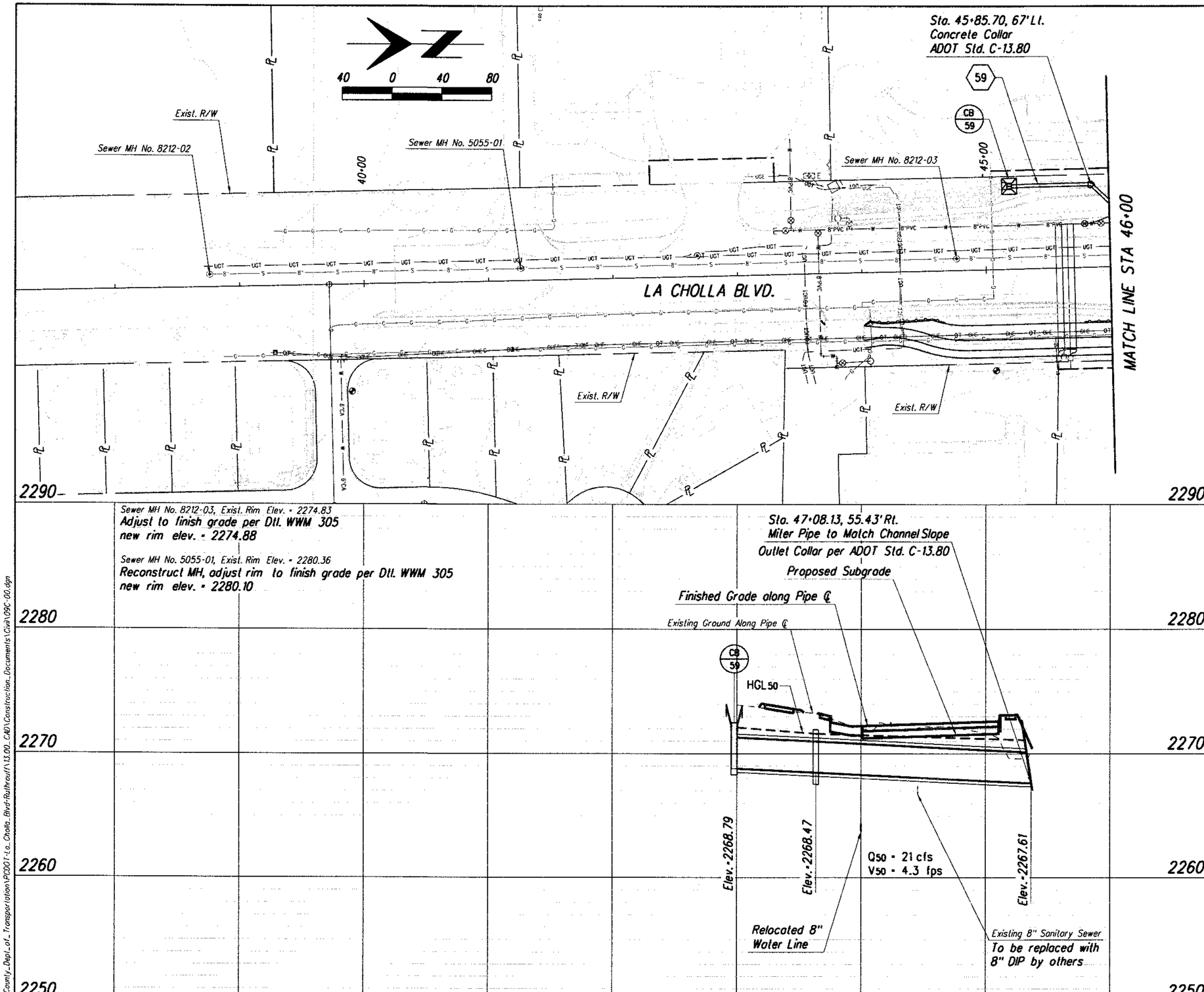

CB 59 — Sta. 45+20.05, 67.00' Lt. Catch Basin, See Detail DB

59 — 30" RCP, 237 L.F., S=0.50%

Arizona Blue Stake
1-800-STAKE-IT
1-800-782-5348
Call Two Working Days Before You Dig

Pima County Department of Transportation

Priscilla S. Cornelio, P.E., Director

No.	Revision Description	Date	Engineer	Date

		Date
Designed	A. Ledesma	July/2009
Drawn	A. Ledesma	July/2009
Checked	R. Britton	July/2009
Proj. Engr.	R. Britton	Aug/2009

Registered Professional Engineer
CERTIFICATE NO. 13783
ROBERT DEAN BRITTAIN
Date Signed 8-24-09
ARIZONA, U.S.A.
Expires 03-31-2011

HDR Engineering, Inc.
5210 East Williams Circle, Suite 530
Tucson, AZ 85711-4459
(520) 584-3600

LA CHOLLA BL VD.
RUTHRAUFF RD. TO RIVER RD.
STORM DRAIN PLANS

Scales	Horiz. 1"=40' Vert. 1"=4'	Sheet	SD1 of SD15	Page	111 of 356

012145
0000000000059914
Pima_County_Dept_of_Transportation\PCDOT-La_Cholla_Blvd-Ruthrauf\13.00_CAD\Construction_Documents\Civil\09C-00.dgn

08\20\09 4:53:26 PM aledesma

Project • 4LCITR

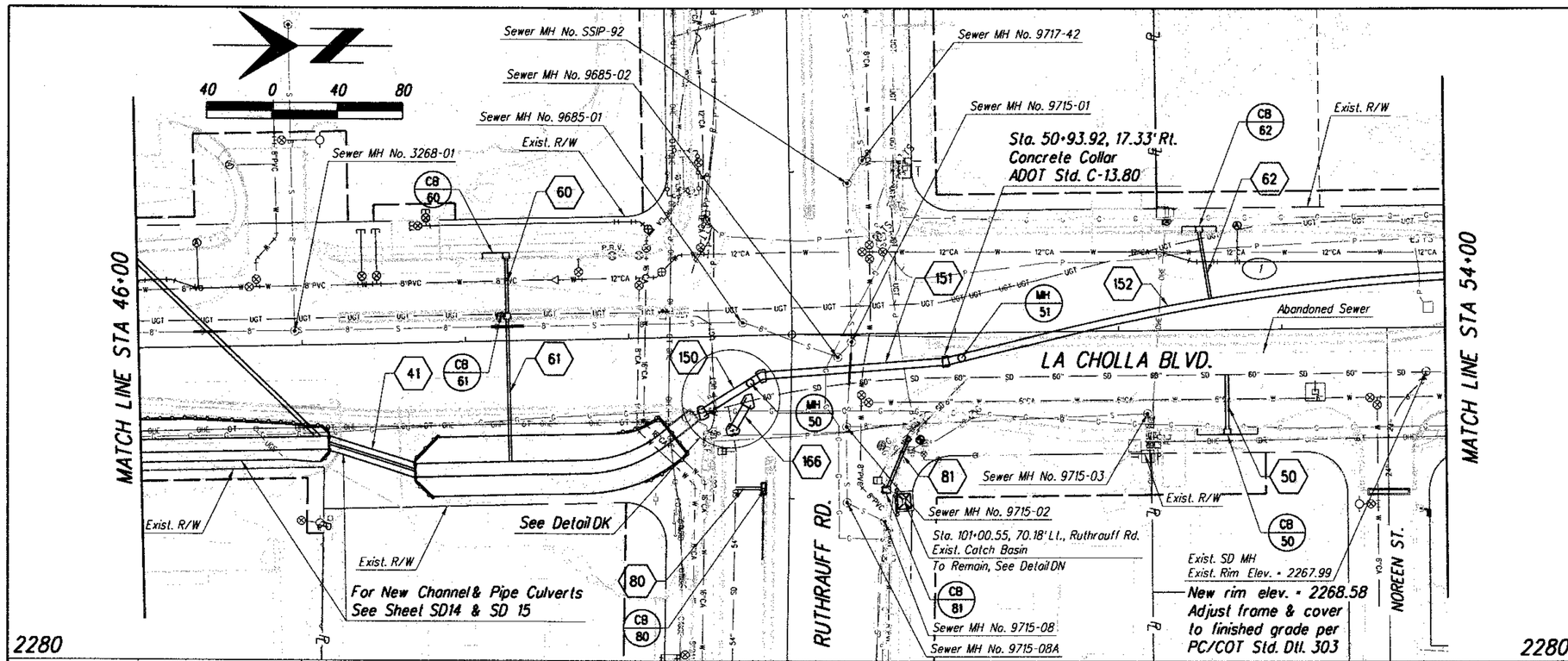

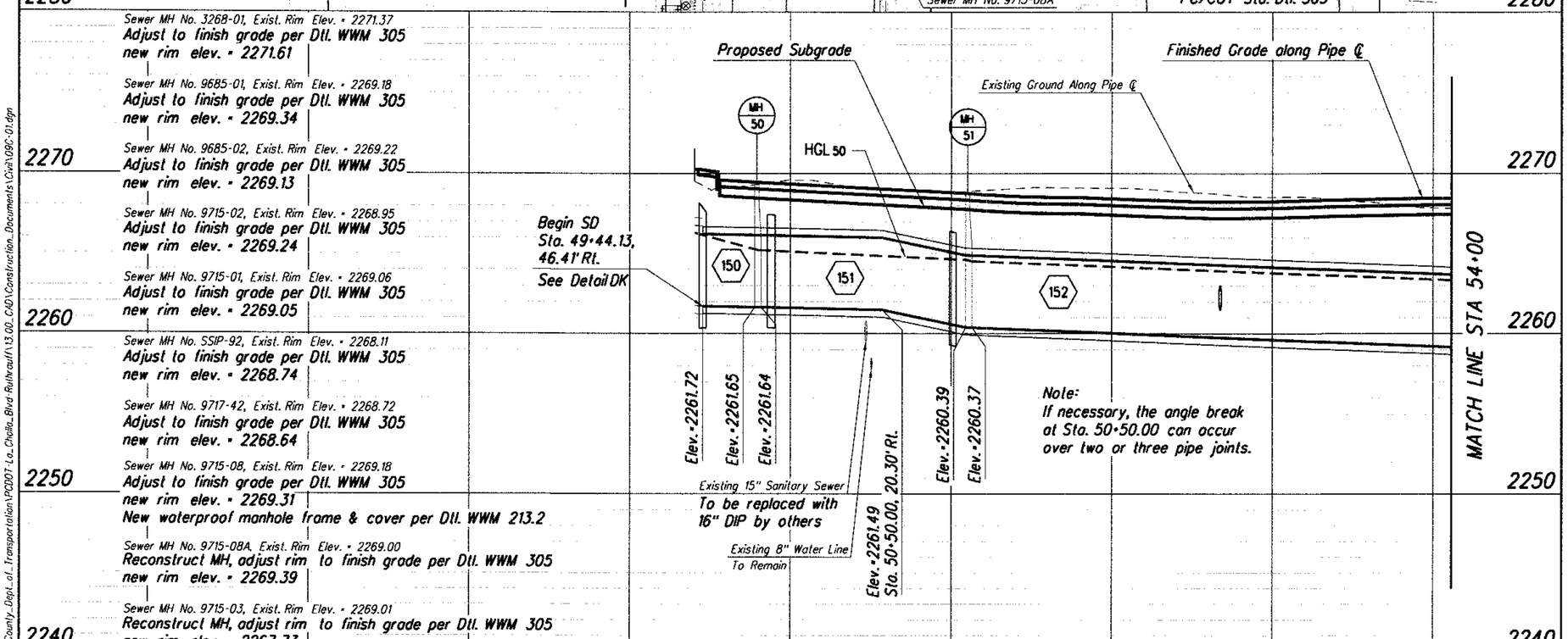

CB 60 — Sta. 48+26.00, 50.00' Lt. Catch Basin Type 3

CB 61 — Sta. 48+26.00, 13.00' Lt. Catch Basin Type 3

CB 62 — Sta. 52+49.91, 60.00' Lt. Catch Basin Type 3

CB 50 — Sta. 52+66.00, 60.00' Rt. Catch Basin Type 3

CB 80 — Sta. 100+94.04, 15.00' Rt. Catch Basin Type 4 With 40' Of Slotted Drain

CB 81 — Sta. 100+93.67, 59.00' Lt. Catch Basin Type 5, See Detail DL

MH 50 — Sta. 49+73.75, 28.94' Rt., Rim Elev. = 2269.46

MH 51 — Sta. 51+03.67, 15.10' Rt., Rim Elev. = 2268.76

150 — 54" RCP, 33 L.F., S=0.20%
Q_{50} = 114 cfs, V_{50} = 7.2 fps

151 — 54" RCP, 75 L.F., S=0.20%
54" RCP, 53 L.F., S=2.13%
Q_{50} = 114 cfs, V_{50} = 7.2 fps

152 — 54" RCP, 357 L.F., S=0.40%
Q_{50} = 114 cfs, V_{50} = 7.2 fps

166 — 54" RCP, 21 L.F., S=1.22%

1

℄ SD Curve Data	
PC = Sta. 51+77.54 (1.8' Lt.)	Δ = 12°52'56.5"
PT = Sta. 54+45.08 (32' Lt.)	R = 1200'
	L = 269.8'
	T = 135.48'

Arizona Blue Stake
1-800-STAKE-IT
1-800-782-5348
Call Two Working Days Before You Dig

Priscilla S. Cornelio, P.E., Director

No.	Revision Description	Engineer	Date

		Date
Designed	A. Ledesma	July/2009
Drawn	A. Ledesma	July/2009
Checked	R. Britton	July/2009
Proj. Engr.	R. Britton	Aug/2009

Registered Professional Engineer (Civil)
Certificate No. 13762
ROBERT DEAN BRITTON
Date Signed 8-24-09
ARIZONA, U.S.A.
Expires 03-31-2011

HDR Engineering, Inc.
5210 East Williams Circle, Suite 530
Tucson, AZ 85711-4459
(520) 594-3600

Pima County Department of Transportation

LA CHOLLA BLVD.
RUTHRAUFF RD. TO RIVER RD.
STORM DRAIN PLANS

Scales: Horiz. 1"=40' Vert. 1"=4'

Sheet SD2 of SD15

Project = 4LCITR

012145
0000000000599H
Pima_County_Dept_of_Transportation\PCDOT-La_Cholla_Blvd-Ruthrauff\13.00_CAD\Construction_Documents\Civil\09C-01.dgn

08\20\09 4:53:31 PM aledesma

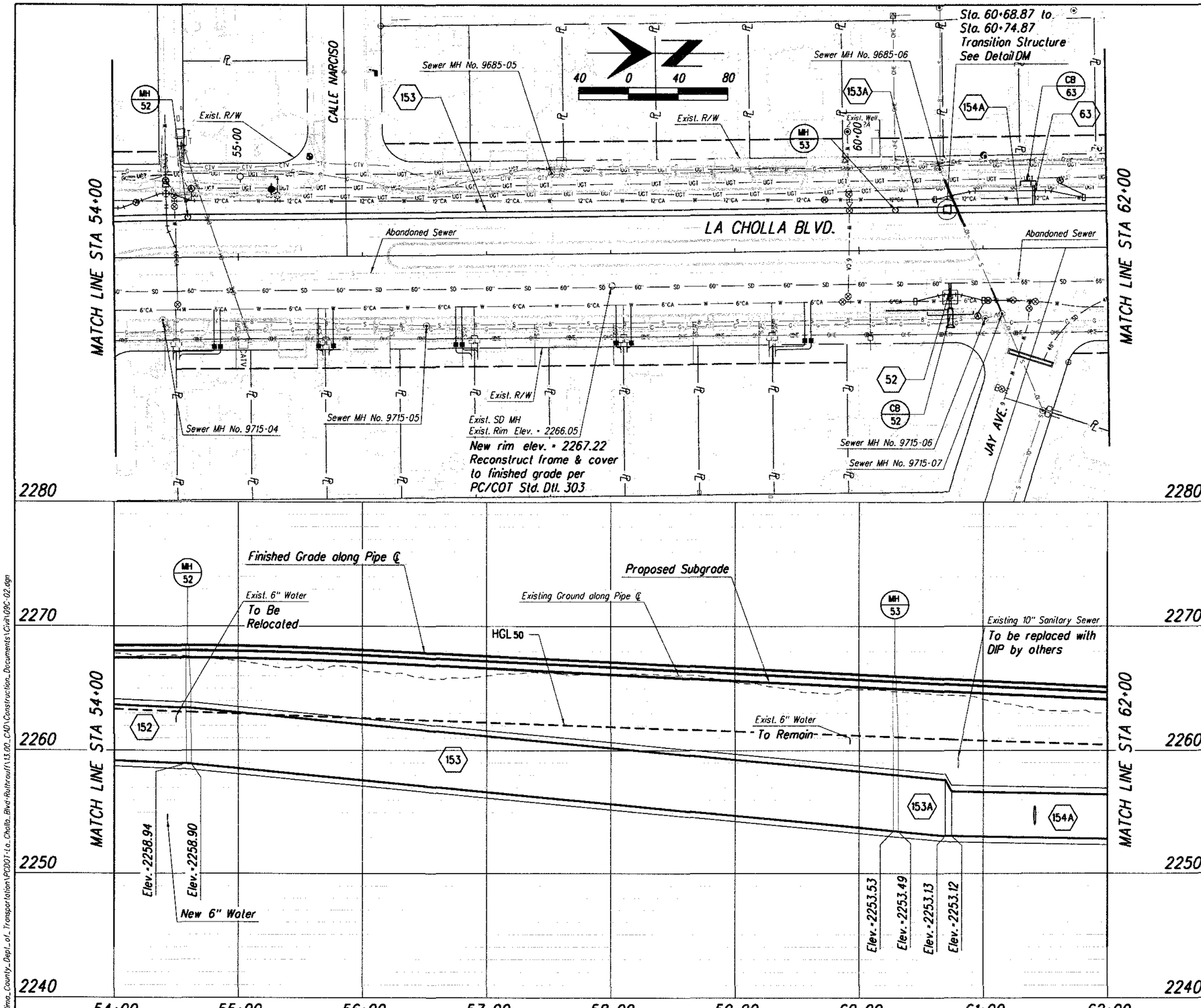

CB 52 — Sta. 60+73.00, 50.00' Rt., Catch Basin Type 5 Modified, See Details DG & DO

CB 63 — Sta. 61+41.50, 50.00' Lt., Catch Basin Type 3

MH 52 — Sta. 54+60.08, 32' Lt., Rim Elev. = 2268.48

MH 53 — Sta. 60+30.00, 32' Lt., Rim Elev. = 2265.97

153 — 54" RCP, 568 L.F., S=0.95% Q50 = 114 cfs, V50 = 7.2 fps

153A — 54" RCP, 38 L.F., 0.95% Q50 = 114 cfs, V50 = 7.2 fps

154A — 43" x 68" HERCP, 256 L.F., S=0.20% Q50 = 114 cfs, V50 = 6.9 fps

Sewer MH No. 9715-04, Exist. Rim Elev. = 2268.49
Reconstruct MH,
adjust to finish grade per Dtl. WWM 305
new rim elev. = 2268.12
New waterproof manhole frame & cover
per Dtl. WWM 213.2

Sewer MH No. 9715-05, Exist. Rim Elev. = 2267.96
Adjust to finish grade per Dtl. WWM 305
new rim elev. = 2268.11

Sewer MH No. 9685-05, Exist. Rim Elev. = 2268.11
Adjust to finish grade per Dtl. WWM 305
new rim elev. = 2267.92
New concrete collar per Dtl. WWM 212

Sewer MH No. 9685-06, Exist. Rim Elev. = 2266.87
Adjust to finish grade per Dtl. WWM 305
new rim elev. = 2266.18
New waterproof manhole frame & cover
per Dtl. WWM 213.2

Sewer MH No. 9715-06, Exist. Rim Elev. = 2265.24
Reconstruct MH,
adjust to finish grade per Dtl. WWM 305
new rim elev. = 2266.02
New concrete collar per Dtl. WWM 212

Sewer MH No. 9715-07, Exist. Rim Elev. = 2265.33
Adjust to finish grade per Dtl. WWM 305
new rim elev. = 2265.71

Arizona Blue Stake
1-800-STAKE-IT
1-800-782-5348
Call Two Working Days Before You Dig

No.	Revision Description	Date

Engineer

		Date
Designed	A. Ledesma	July/2009
Drawn	A. Ledesma	July/2009
Checked	R. Brittain	July/2009
Proj. Engr.	R. Brittain	Aug/2009

Priscilla S. Cornelio, P.E., Director

Registered Professional Engineer (Civil) — Certificate No. 13762 — Robert Dean Brittain — Date Signed 8-24-09 — Arizona, U.S.A. — Expires 03-31-2011

HDR Engineering, Inc.
5210 East Williams Circle, Suite 530
Tucson, AZ 85711-4459
(520) 584-3600

Pima County Department of Transportation

LA CHOLLA BLVD.
RUTHRAUFF RD. TO RIVER RD.
STORM DRAIN PLANS

Scales: Horiz. 1"=40' Vert. 1"=4'

Sheet SD3 of SD15

012145
0000000000059914
Pima_County_Dept_of_Transportation\PCDOT-La_Cholla_Blvd-Ruthrauff\13.00_CAD\Construction_Documents\Civil\09C-02.dgn

08\20\09 4:53:39 PM aledesma

Project = 4LCITR

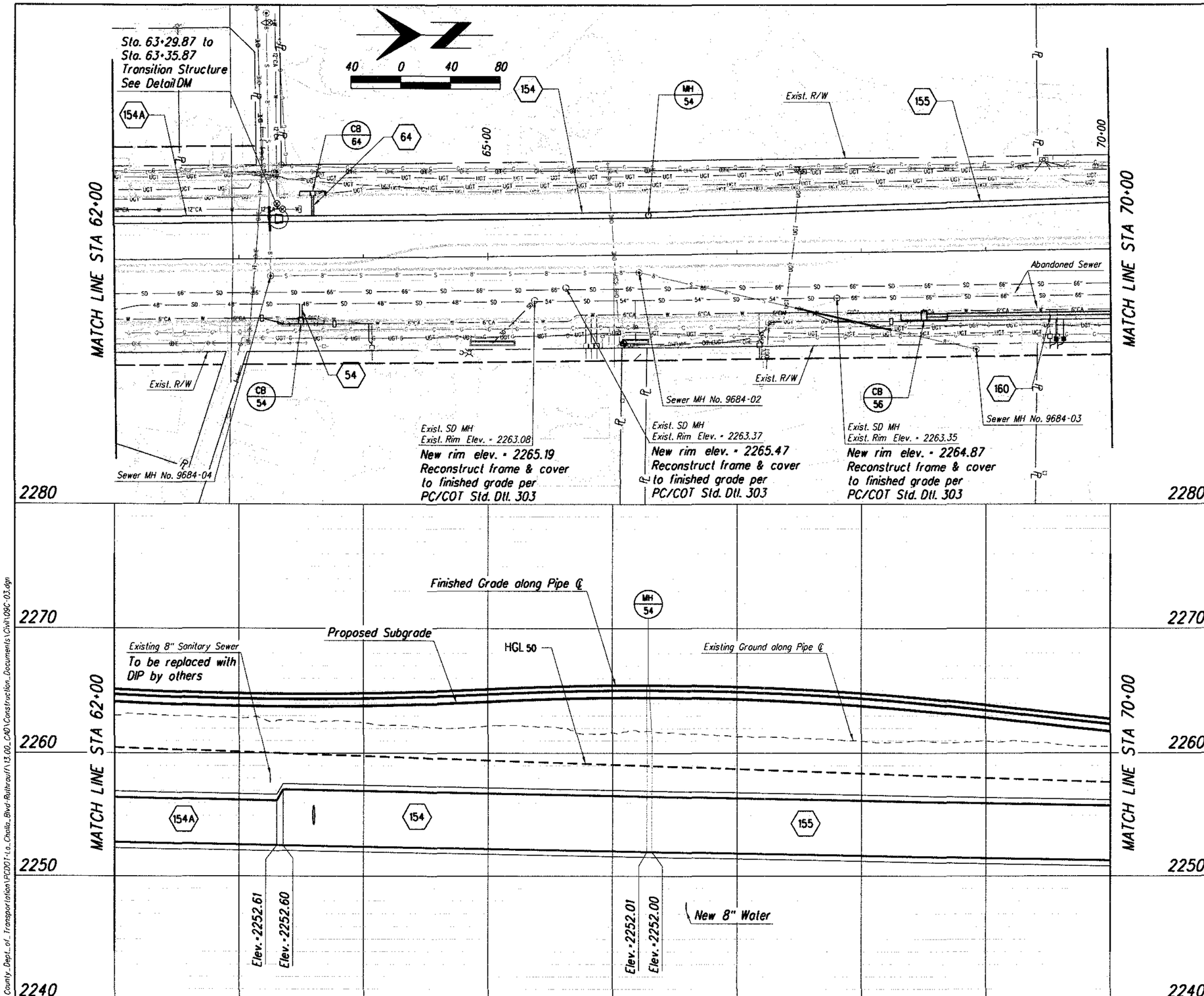

CB 64 — Sta. 63+60.00, 50.00' Lt., Catch Basin Type 3

CB 54 — Sta. 63+49.42, 50.00' Rt., Catch Basin Type 5 Modified, See Detail DG

CB 56 — Sta. 68+50.00, 50.00' Rt., Catch Basin Type 5 Modified, See Detail DF

MH 54 — Sta. 66+29.61, 32' Lt., Rim Elev. = 2265.43

154 — 54" RCP, 293 L.F., S=0.20% Q50 = 114 cfs, V50 = 7.2 fps

155 — 54" RCP, 657 L.F., S=0.20% Q50 = 114 cfs, V50 = 7.2 fps

160 — 30" RCP, See Sheet SD10 For Additional Pipe Information

Sewer MH No. 9684-04, Exist. Rim Elev. = 2263.03
Reconstruct MH
adjust to finish grade per Dtl. WWM 305
new rim elev. = 2265.11

Sewer MH No. 9684-02, Exist. Rim Elev. = 2264.05
Reconstruct MH
adjust to finish grade per Dtl. WWM 305
new rim elev. = 2265.78

Arizona Blue Stake
1-800-STAKE-IT
1-800-782-5348
Call Two Working Days Before You Dig

No.	Revision Description	Engineer	Date

		Date
Designed	A. Ledesma	July/2009
Drawn	A. Ledesma	July/2009
Checked	R. Brittain	July/2009
Proj. Engr.	R. Brittain	Aug/2009

Priscilla S. Cornelio, P.E., Director

REGISTERED PROFESSIONAL ENGINEER (CIVIL) CERTIFICATE NO. 13762 ROBERT DEAN BRITTAIN DATE SIGNED 8-24-09 ARIZONA, U.S.A.
Expires 03-31-2011

HDR Engineering, Inc.
5210 East Williams Circle, Suite 530
Tucson, AZ 85711-4459
(520) 584-3600

Pima County Department of Transportation

LA CHOLLA BLVD.
RUTHRAUFF RD. TO RIVER RD.
STORM DRAIN PLANS

Scales	Horiz. 1"=40' Vert. 1"=4'	Sheet	SD4 of SD15	Page	114 of 356

Project = 4LCITR

08\20\09 4:53:45 PM aledesma

012145
00000000005991H
Pima_County_Dept._of_Transportation\PCDOT-I.G._Cholla_Blvd-Ruthrauff\13.00_CAD\Construction_Documents\Civil\09C-03.dgn

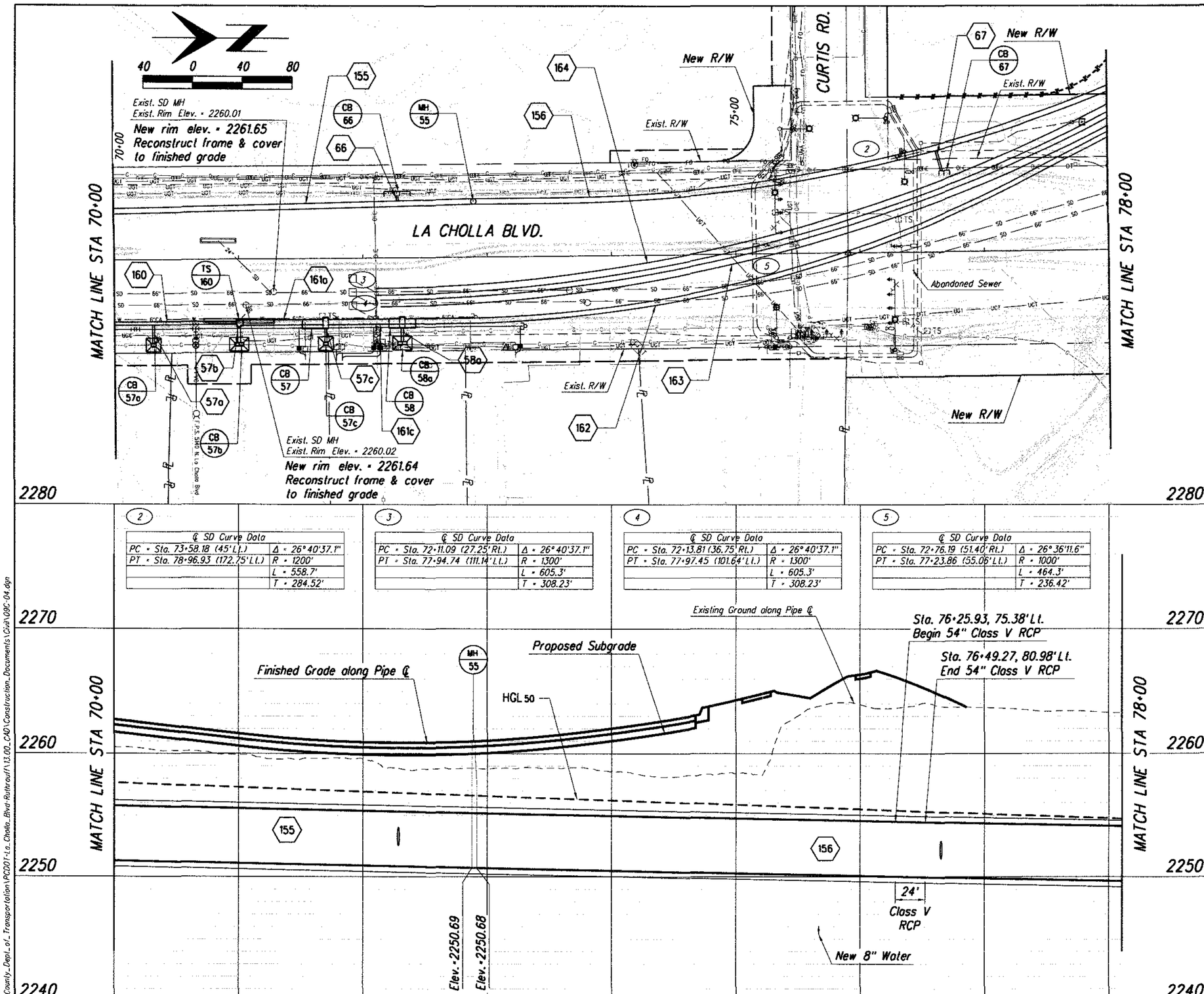

℄ SD Curve Data	
PC = Sta. 73+58.18 (45' Lt.)	Δ = 26° 40' 37.1"
PT = Sta. 78+96.93 (172.75' Lt.)	R = 1200'
	L = 558.7'
	T = 284.52'

℄ SD Curve Data	
PC = Sta. 72+11.09 (27.25' Rt.)	Δ = 26° 40' 37.1"
PT = Sta. 77+94.74 (111.14' Lt.)	R = 1300'
	L = 605.3'
	T = 308.23'

℄ SD Curve Data	
PC = Sta. 72+13.81 (36.75' Rt.)	Δ = 26° 40' 37.1"
PT = Sta. 77+97.45 (101.64' Lt.)	R = 1300'
	L = 605.3'
	T = 308.23'

℄ SD Curve Data	
PC = Sta. 72+76.19 (51.40' Rt.)	Δ = 26° 36' 11.6"
PT = Sta. 77+23.86 (55.06' Lt.)	R = 1000'
	L = 464.3'
	T = 236.42'

CB 57a — Sta. 70+31.27, 68.50' Rt., Catch Basin Type 4, See Detail DN

CB 57b — Sta. 71+00.00, 68.50' Rt., Catch Basin Type 4, See Detail DN

CB 57c — Sta. 71+69.71, 68.50' Rt., Catch Basin Type 4, See Detail DN

CB 57 — Sta. 71+69.71, 50.00' Rt., Catch Basin Type 5 Modified, See Detail DF

CB 66 — Sta. 72+28.39, 50.00' Lt., Catch Basin Type 3

CB 58a — Sta. 72+31.27, 68.50' Rt., Catch Basin Type 4, See Detail DN

CB 58 — Sta. 72+31.27, 50.00' Rt., Catch Basin Type 5 Modified, See Detail DF

CB 67 — Sta. 76+66.50, 62.00' Lt., Catch Basin Type 3

MH 55 — Sta. 72+89.60, 45' Lt., Rim Elev. = 2260.99

TS 160 — Sta. 71+00.00, 51.40' Rt., PC/COT Std. Dtl. 312 A = 90°, L = 6', E = 3.5', C = 3.5'

156 — 54" RCP, 643 L.F., S=0.20% Q50 = 114 cfs, V50 = 7.2 fps

161a — 48" RCP, See Sheet SD10 For Additional Pipe Information

161c — 48" RCP, See Sheet SD10 For Additional Pipe Information

162 — 48" RCP, See Sheet SD10 For Additional Pipe Information

163 — 66" RCP, 744 L.F., S=0.31%

164 — 66" RCP, 742 L.F., S=0.31%

Arizona Blue Stake
1-800-STAKE-IT
1-800-782-5348
Call Two Working Days Before You Dig

Pima County Department of Transportation

Priscilla S. Cornelio, P.E., Director

No.	Revision Description	Engineer	Date

		Date
Designed	A. Ledesma	July/2009
Drawn	A. Ledesma	July/2009
Checked	R. Britain	July/2009
Proj. Engr.	R. Britain	Aug/2009

Registered Professional Engineer (Civil) — Certificate No. 13762 — Robert Dean Britain — Date Signed 8-24-09 — Arizona, U.S.A. — Expires 03-31-2011

HDR Engineering, Inc.
5210 East Williams Circle, Suite 530
Tucson, AZ 85711-4459
(520) 584-3600

LA CHOLLA BLVD.
RUTHRAUFF RD. TO RIVER RD.
STORM DRAIN PLANS

Scales	Horiz. 1"=40' Vert. 1"=4'	Sheet	SD5 of SD15	Page	115 of 356

Project = 4LCITR

012145
00000000005914
Pima_County_Dept._of_Transportation\PCD01-La_Cholla_Blvd-Ruthrauff\13.00_CAD\Construction_Documents\Civil\09C-04.dgn

08\20\09 4:53:52 PM aledesma

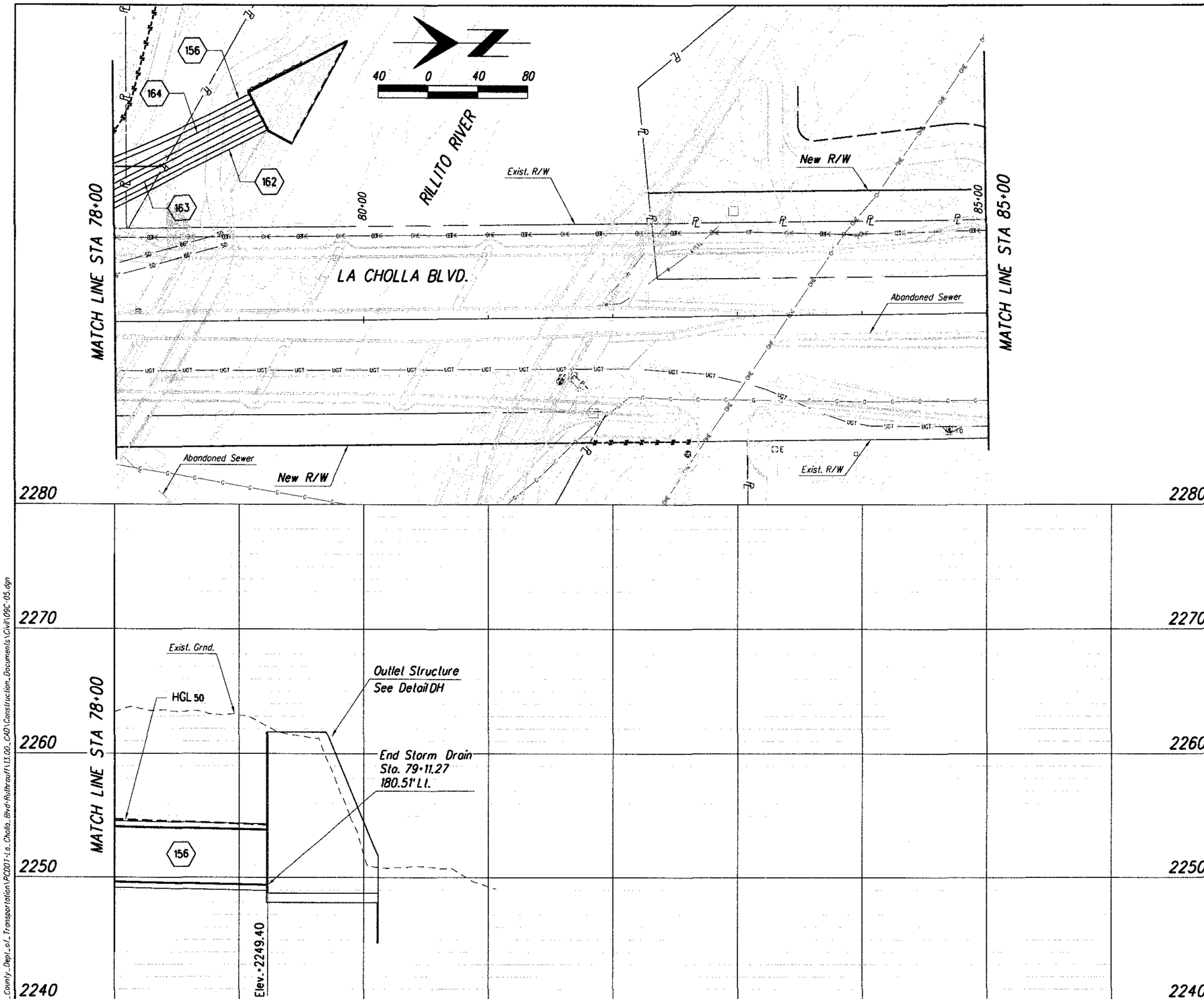

Arizona Blue Stake
1-800-STAKE-IT
1-800-782-5348
Call Two Working Days Before You Dig

Priscilla S. Cornelio, P.E., Director

Pima County Department of Transportation

No.	Revision Description	Engineer	Date

		Date
Designed	A. Ledesma	July/2009
Drawn	A. Ledesma	July/2009
Checked	R. Britton	July/2009
Proj. Engr.	R. Britton	Aug/2009

REGISTERED PROFESSIONAL ENGINEER (CIVIL)
CERTIFICATE NO. 13762
ROBERT DEAN BRITTAIN
DATE SIGNED 8-24-09
ARIZONA, U.S.A.
Expires 03-31-2011

HDR Engineering, Inc.
5210 East Williams Circle, Suite 530
Tucson, AZ 85711-4459
(520) 584-3600

LA CHOLLA BL VD.
RUTHRAUFF RD. TO RIVER RD.
STORM DRAIN PLANS

Scales	Horiz. 1"=40' Vert. 1"=4'	Sheet	SD6 of SD15	Page	116 of 356

012145
G0000000000059914
Pima_County_Dept_of_Transportation\PCDOT-La_Cholla_Blvd-Ruthrauff\13.00_CAD\Construction_Documents\Civil\09C-05.dgn

08\20\09 4:54:00 PM aledesma

Project • 4LCITR

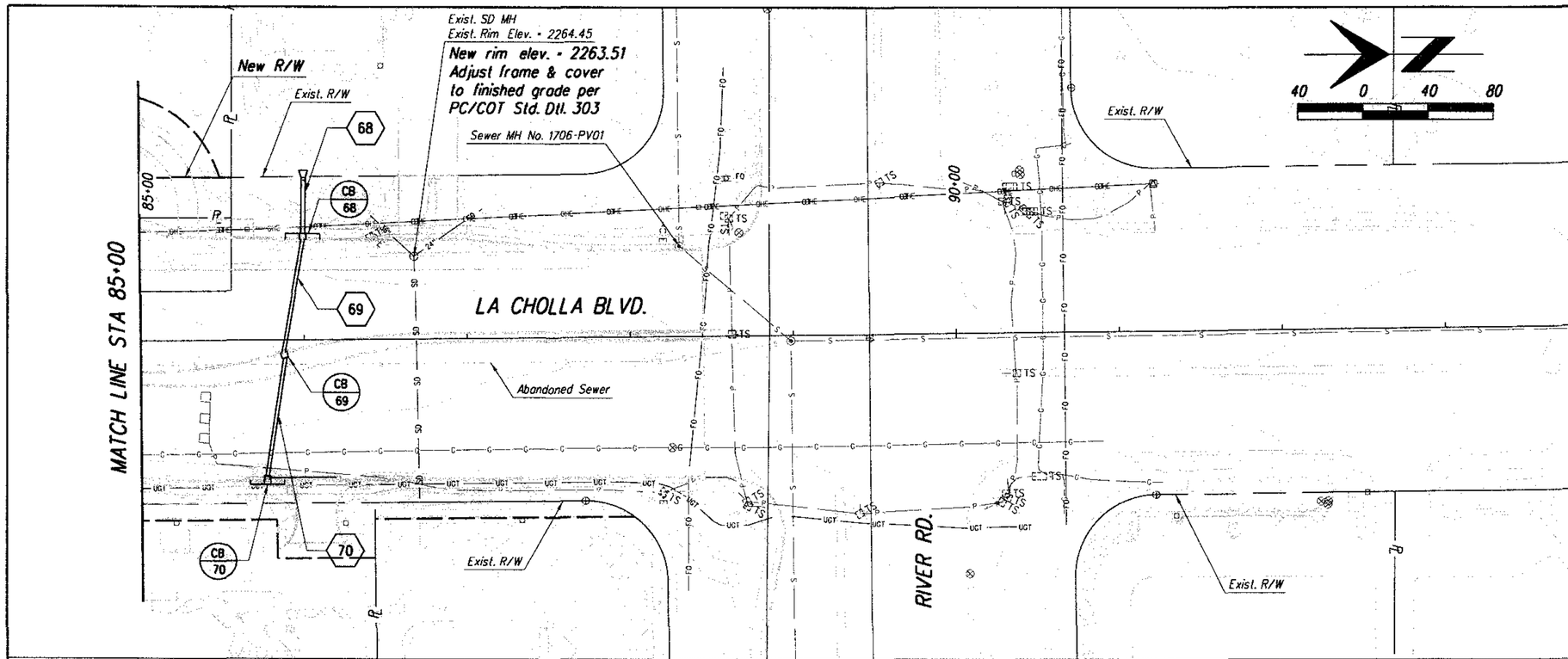

CB 68 — Sta. 86+00.09, 61.00' Lt., Catch Basin Type 3

CB 69 — Sta. 85+87.50, 7.50' Rt., Catch Basin Type 3

CB 70 — Sta. 85+77.00, 85.50' Rt., Catch Basin Type 5 Modified, See Detail DG

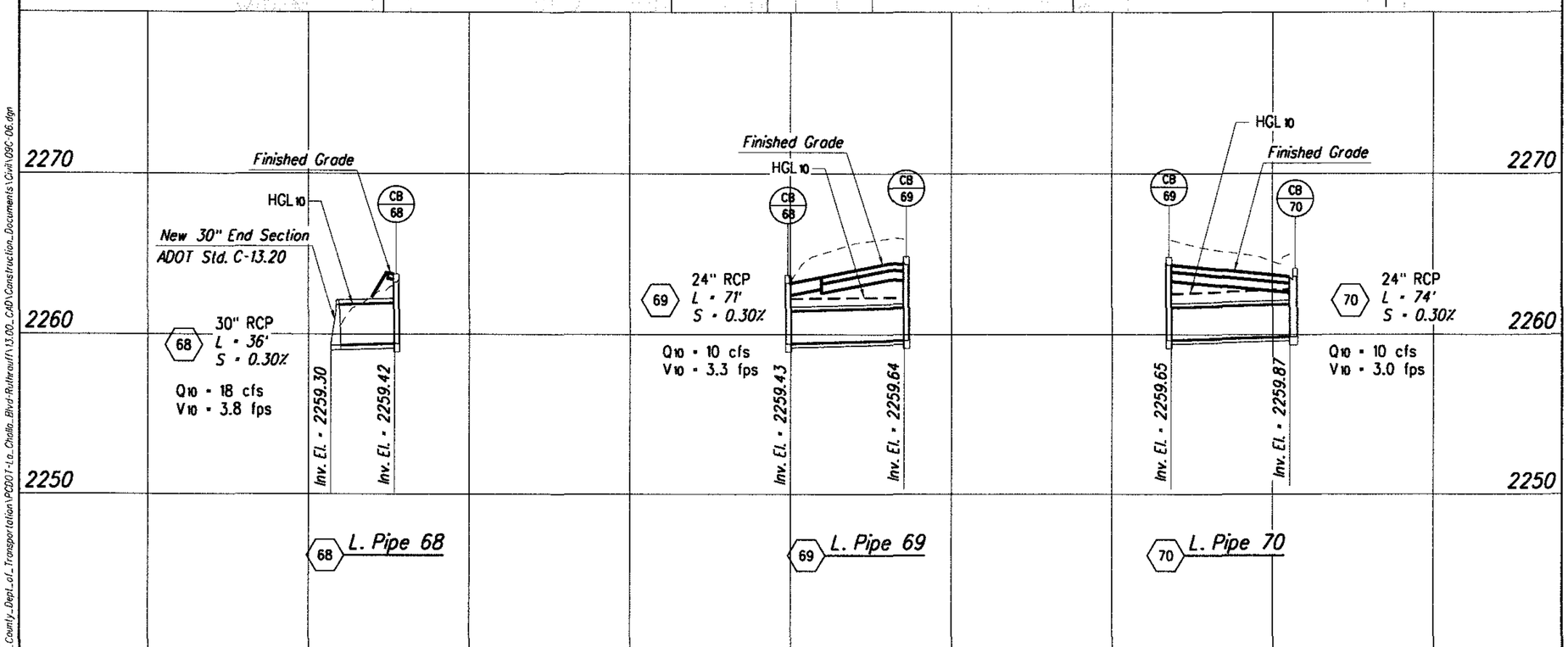

Arizona Blue Stake
1-800-STAKE-IT
1-800-782-5348
Call Two Working Days Before You Dig!

Scales	Horiz. 1"=40' Vert. 1"=4'	Sheet	SD7 of SD15	Page	117 of 356

Priscilla S. Cornelio, P.E., Director

Pima County Department of Transportation

No.	Revision Description	Engineer	Date

		Date
Designed	A. Ledesma	July/2009
Drawn	A. Ledesma	July/2009
Checked	R. Britton	July/2009
Proj. Engr.	R. Britton	Aug/2009

Registered Professional Engineer (Civil)
CERTIFICATE NO. 13762
ROBERT DEAN BRITTAIN
Date Signed 8-21-09
ARIZONA, U.S.A.
Expires 03-31-2011

HDR Engineering, Inc.
5210 East Williams Circle, Suite 530
Tucson, AZ 85711-4459
(520) 584-3600

LA CHOLLA BLVD.
RUTHRAUFF RD. TO RIVER RD.
STORM DRAIN PLANS

012145
000000000059914
Pima_County_Dept_of_Transportation\PCDOT-La_Cholla_Blvd-Ruthrauff\13.00_CAD\Construction_Documents\Civil\09C-06.dgn

08\20\09 4:54:06 PM aledesma

Project • 4LCITR

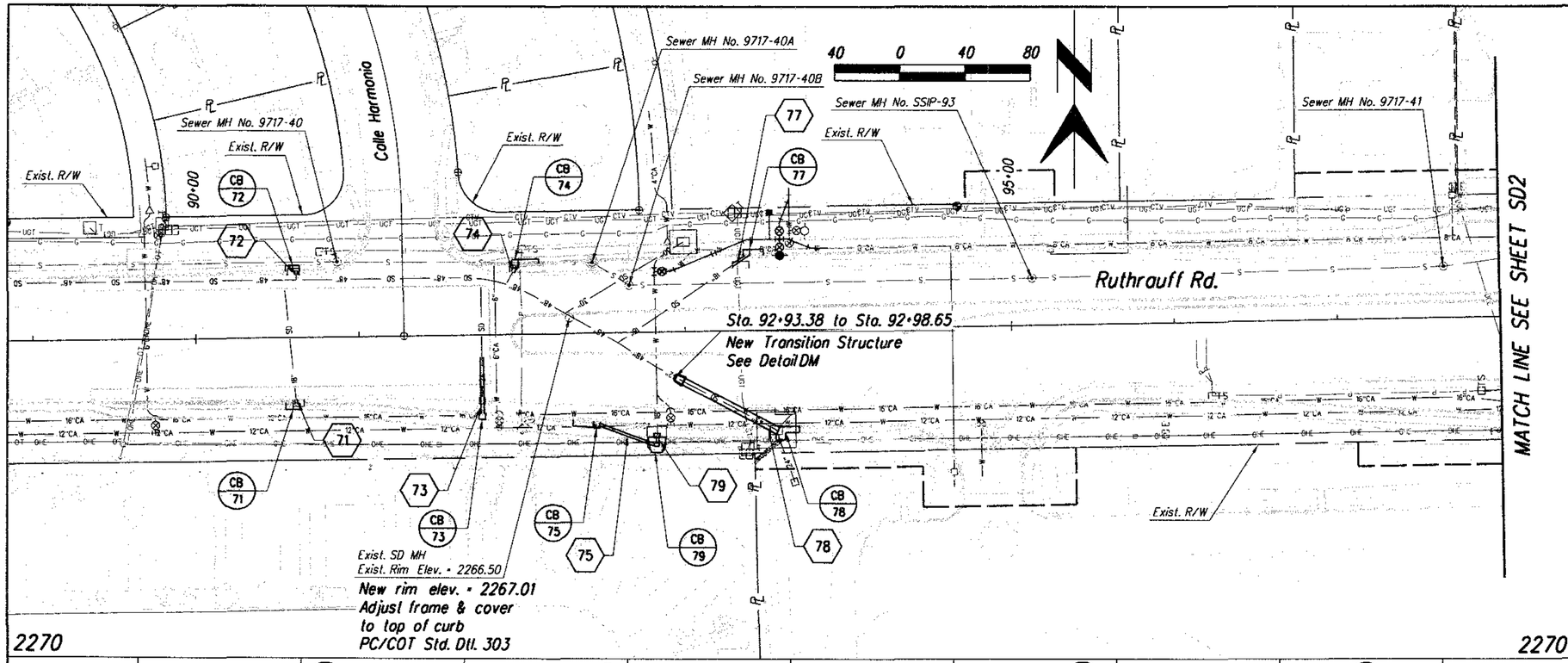

CB 71 — Sta. 90+61.05, 40.22' Rt. Catch Basin Type 3

CB 72 — Sta. 90+62.35, 40.25' Lt. Catch Basin Type 3

CB 73 — Sta. 91+75.00, 47.66' Rt. Catch Basin Type 3

CB 74 — Sta. 91+96.68, 42.93' Lt. Catch Basin Type 3

CB 75 — Sta. 92+45.03, 54.05' Rt. Catch Basin Type 3

CB 77 — Sta. 93+38.62, 45.77' Lt. Catch Basin Type 3

CB 78 — Sta. 93+55.00, 59.00' Rt. Catch Basin, See Detail DI

CB 79 — Sta. 92+81.47, 63.89' Rt. Catch Basin, See Detail DJ

79 — See Detail DJ for Lateral Pipe 79

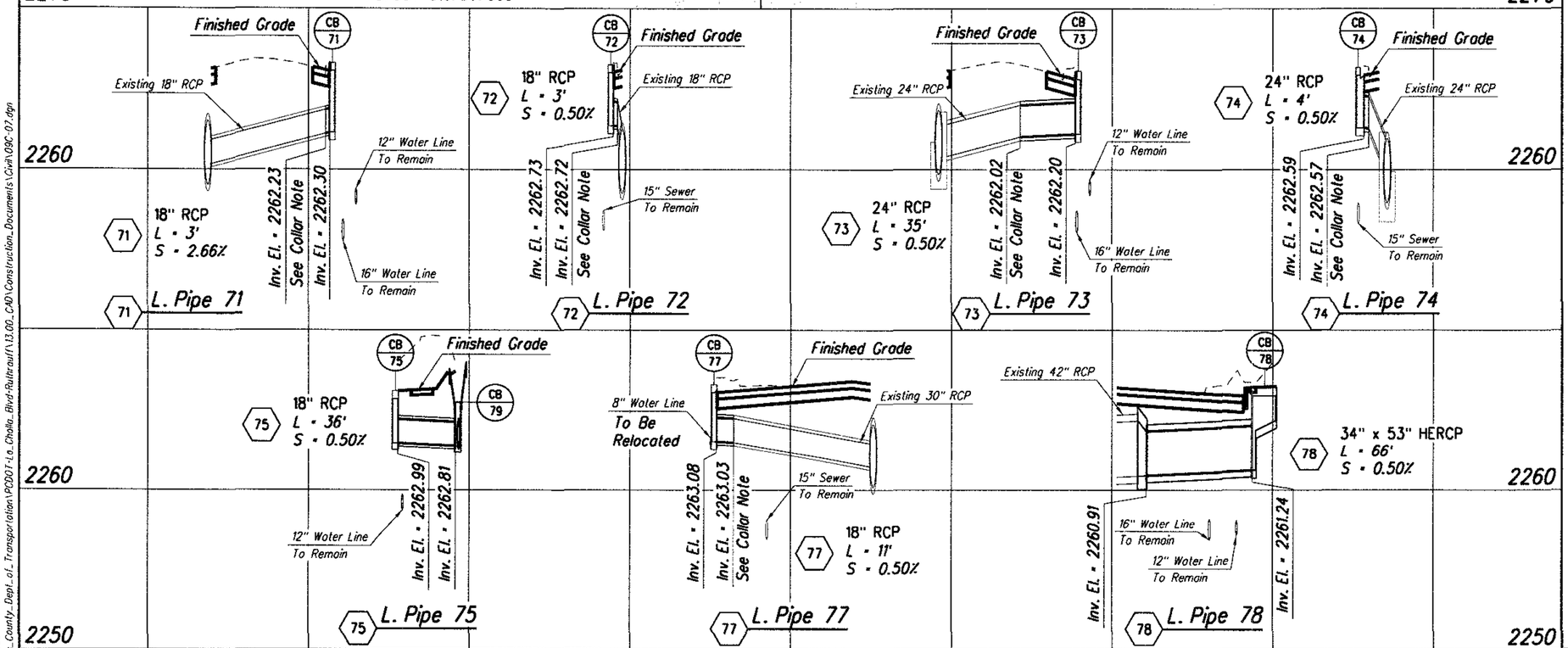

Sewer MH No. 9717-40, Exist. Rim Elev. = 2266.28
Reconstruct MH,
adjust to finish grade per Dtl. WWM 305
new rim elev. = 2266.58
New waterproof manhole frame & cover per Dtl. 213.2

Sewer MH No. 9717-40A, Exist. Rim Elev. = 2266.73
Reconstruct MH,
adjust to finish grade per Dtl. WWM 305
new rim elev. = 2265.92
New waterproof manhole frame & cover per Dtl. WWM 213.2

Sewer MH No. 9717-40B, Exist. Rim Elev. = 2266.22
Adjust to finish grade per Dtl. WWM 305
new rim elev. = 2266.25

Sewer MH No. SSIP-93, Exist. Rim Elev. = 2266.97
Adjust to finish grade per Dtl. WWM 305
new rim elev. = 2267.04

Sewer MH No. 9717-41, Exist. Rim Elev. = 2267.67
Reconstruct MH,
adjust to finish grade per Dtl. WWM 305
new rim elev. = 2268.21

Collar Note:
Connect new pipe to existing pipe with concrete collar per ADOT Std. Dwg. C-13.80

Arizona Blue Stake
1-800-STAKE-IT
1-800-782-5348
Call Two Working Days Before You Dig

Scales: Horiz. 1"=40' Vert. 1"=4'

Sheet SD8 of SD15

Pima County Department of Transportation
Priscilla S. Cornelio, P.E., Director

No.	Revision Description	Engineer	Date

		Date
Designed	A. Ledesma	July 2009
Drawn	A. Ledesma	July 2009
Checked	R. Brittain	July 2009
Proj. Engr.	R. Brittain	Aug. 2009

Registered Professional Engineer (Civil) CERTIFICATE NO. 13762 ROBERT DEAN BRITTAIN Date Signed 8-24-09 ARIZONA, U.S.A.
Expires 03-31-2011

HDR Engineering, Inc.
5210 East Williams Circle, Suite 530
Tucson, AZ 85711-4459
(520) 584-3600

LA CHOLLA BL VD.
RUTHRAUFF RD. TO RIVER RD.
STORM DRAIN PLANS

Project • 4LCITR

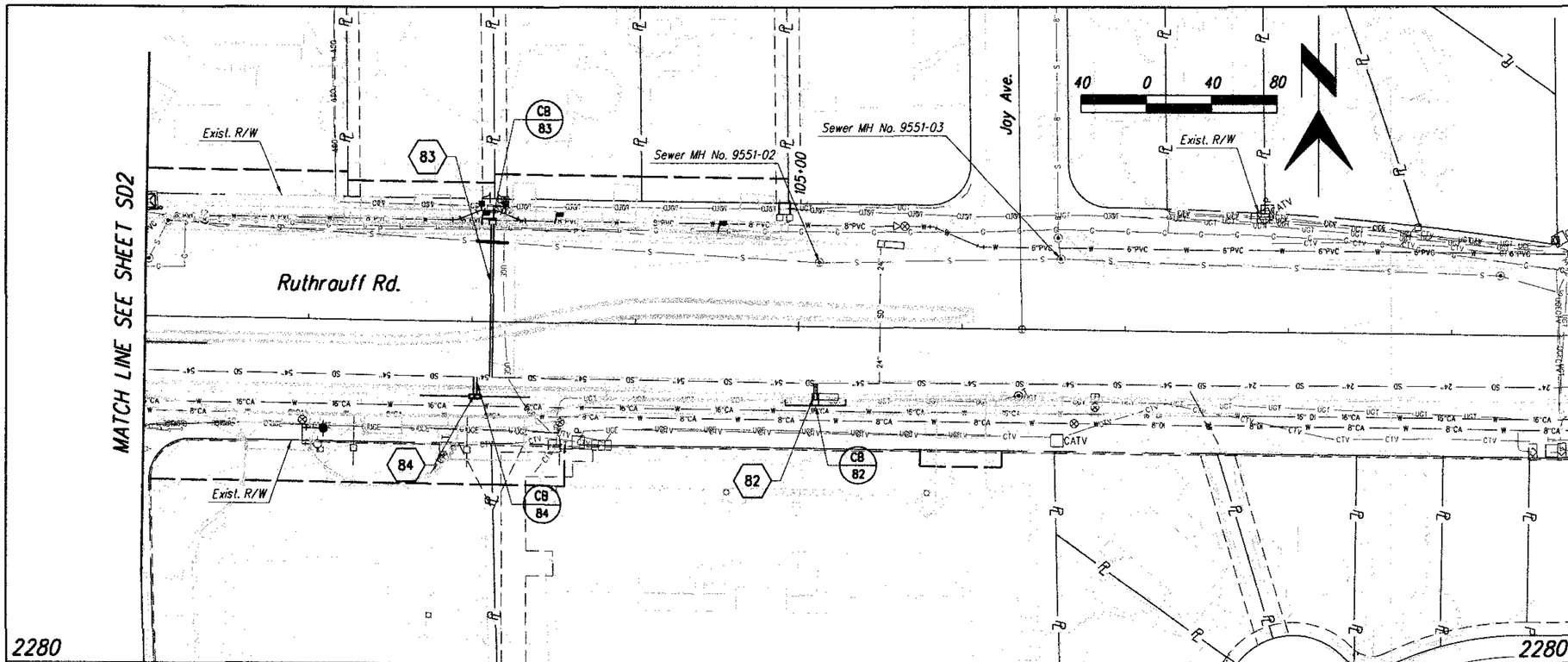

CB 82 — Sta. 105+10.98, 44.73' Rt. Catch Basin Type 3

CB 83 — Sta. 103+12.00, 59.00' Lt. Catch Basin Type 3

CB 84 — Sta. 103+02.50, 44.50' Rt., Catch Basin Type 4 With 60' Of Slotted Drain

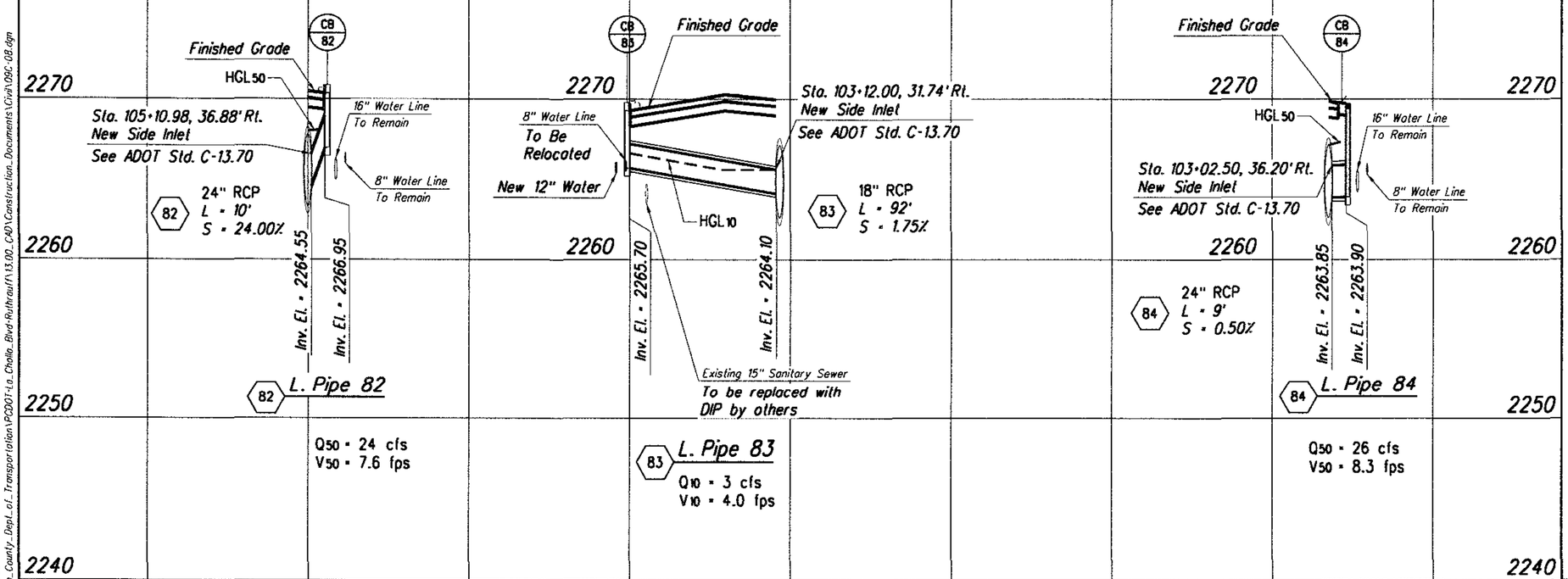

Collar Note:
Connect new pipe to existing pipe with concrete collar per ADOT Std. Dwg. C-13.80

Arizona Blue Stake
1-800-STAKE-IT
1-800-782-5348
Call Two Working Days Before You Dig

Scales	Horiz. 1"=40' Vert. 1"=4'	Sheet SD9 of SD15	Page 119 of 356

Pima County Department of Transportation
Priscilla S. Cornelio, P.E., Director

No.	Revision Description	Engineer	Date

		Date
Designed	A. Ledesma	July/2009
Drawn	A. Ledesma	July/2009
Checked	R. Brittain	July/2009
Proj. Eng.	R. Brittain	Aug/2009

Registered Professional Engineer (Civil) Certificate No. 13762 ROBERT DEAN BRITTAIN Date Signed 8-24-09 ARIZONA, U.S.A.
Expires 03-31-2011

HDR Engineering, Inc.
5210 East Williams Circle, Suite 530
Tucson, AZ 85711-4459
(520) 584-3600

LA CHOLLA BLVD.
RUTHRAUFF RD. TO RIVER RD.
STORM DRAIN PLANS

012145
00000000005994
Pima_County_Dept_of_Transportation\PCDOT-La_Cholla_Blvd-Ruthrauff\13.00_CAD\Construction_Documents\Civil\09C-08.dgn

08\20\09 4:54:18 PM aledesma

Project • 4LCITR

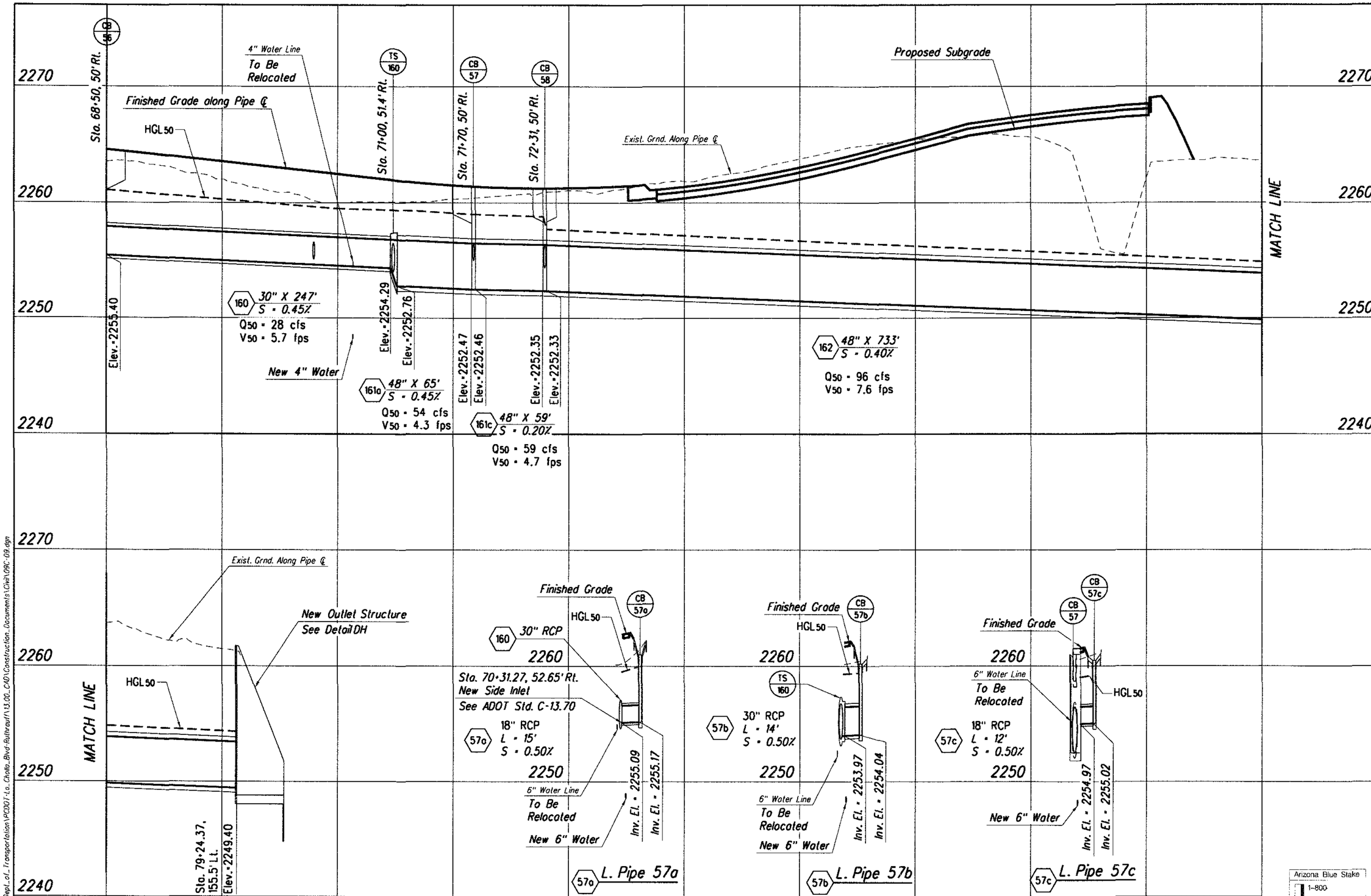

Arizona Blue Stake
1-800
1-800-782-5348
Call Two Working Days Before You Dig

Scales	Horiz. 1"=40' Vert. 1"=4'	Sheet SD10 of SD15	Page 120 of 356

Pima County Department of Transportation

Priscilla S. Cornelio, P.E., Director

Designed	A. Ledesma	July/2009
Drawn	A. Ledesma	July/2009
Checked	R. Brittain	July/2009
Proj. Engr.	R. Brittain	Aug/2009

Date

No.	Revision Description	Engineer	Date

Registered Professional Engineer (Civil) CERTIFICATE NO. 13762 ROBERT DEAN BRITTAIN DATE SIGNED 8-20-09 ARIZONA, U.S.A.

Expires 03-31-2011

HDR Engineering, Inc.
5210 East Williams Circle, Suite 530
Tucson, AZ 85711-4459
(520) 584-3600

LA CHOLLA BLVD.
RUTHRAUFF RD. TO RIVER RD.
STORM DRAIN PROFILE

012145
G0000000000059914
Pima_County_Dept_of_Transportation\PCDOT-La_Cholla_Blvd-Ruthrauff\13.00_CAD\Construction_Documents\Civil\09C-09.dgn

08\20\09 4:54:24 PM aledesma

Project • 4LCITR

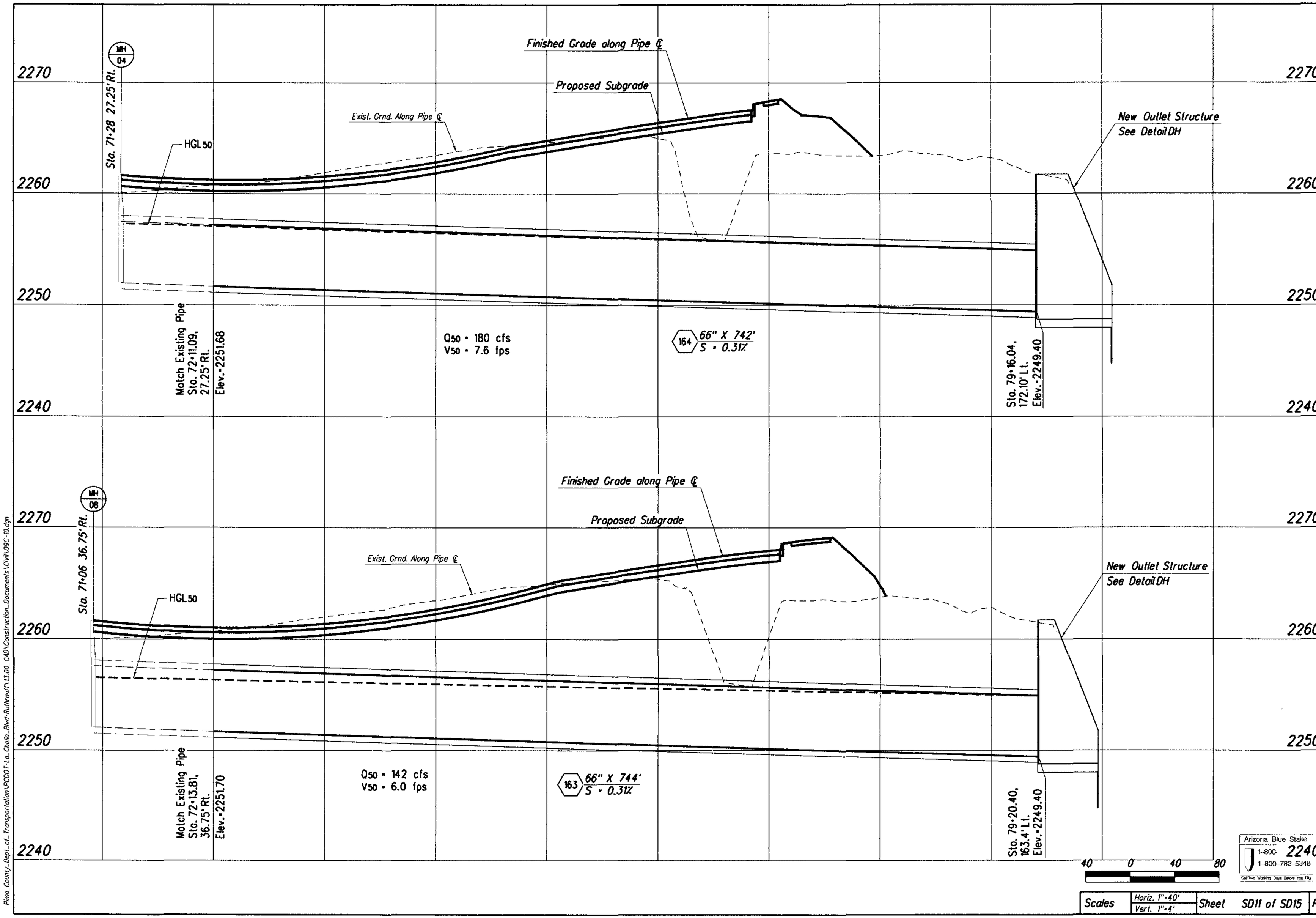

Pima County Department of Transportation

Priscilla S. Cornelio, P.E., Director

Designed	A. Ledesma	July/2009
Drawn	A. Ledesma	July/2009
Checked	R. Brittain	July/2009
Proj. Engr.	R. Brittain	Aug/2009

No.	Revision Description	Engineer	Date

Registered Professional Engineer (Civil) CERTIFICATE NO. 15762 ROBERT DEAN BRITTAIN Date Signed 8-21-09 ARIZONA, U.S.A.

Expires 03-31-2011

HDR Engineering, Inc.
5210 East Williams Circle, Suite 530
Tucson, AZ 85711-4459
(520) 594-3600

LA CHOLLA BL VD.
RUTHRAUFF RD. TO RIVER RD.
STORM DRAIN PROFILE

Scales	Horiz. 1"=40' Vert. 1"=4'	Sheet	SD11 of SD15	Page	121 of 356

Project # 4LCITR

012145
C0000000005994
Pima_County_Dept_of_Transportation\PCDOT-La_Cholla_Blvd-Ruthrauff\13.00_CAD\Construction_Documents\Civil\09C-10.dgn

08\20\09 4:54:28 PM aledesma

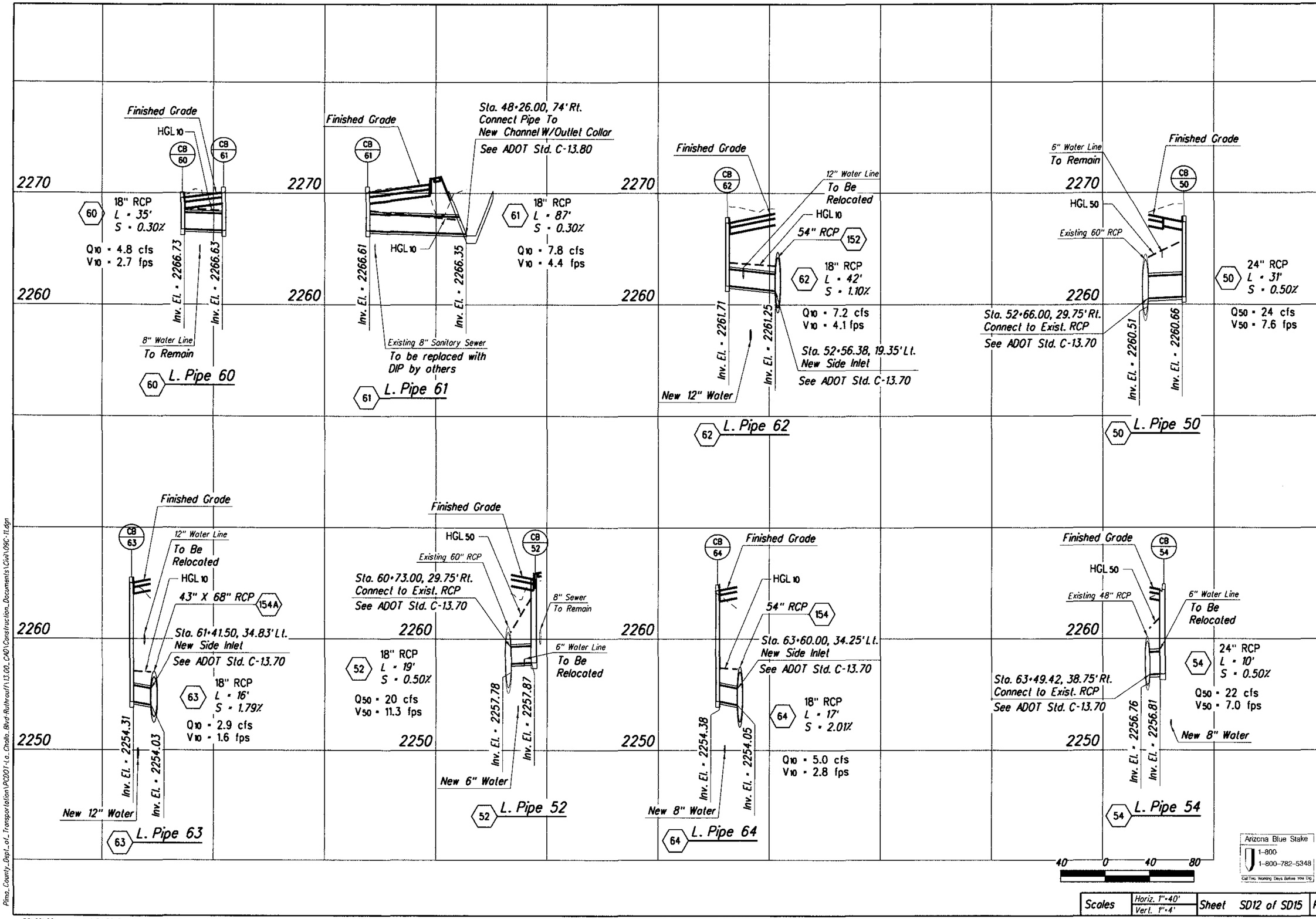

Pima County Department of Transportation

Priscilla S. Cornelio, P.E., Director

No.	Revision Description	Engineer	Date

		Date
Designed	A. Ledesma	July/2009
Drawn	A. Ledesma	July/2009
Checked	R. Brittain	July/2009
Proj. Engr.	R. Brittain	Aug/2009

Registered Professional Engineer
CERTIFICATE NO. 13792
ROBERT DEAN BRITTAIN
DATE SIGNED 8-26-09
ARIZONA, U.S.A.
Expires 03-31-2011

HDR Engineering, Inc.
5210 East Williams Circle, Suite 530
Tucson, AZ 85711-4459
(520) 584-3600

LA CHOLLA BLVD.
RUTHRAUFF RD. TO RIVER RD.
STORM DRAIN LATERAL PIPE PROFILES

Scales	Horiz. 1"=40' Vert. 1"=4'	Sheet SD12 of SD15	Page 122 of 356

Project • 4LCITR

012145
000000000059914
Pima_County_Dept_of_Transportation\PCDOT-La_Cholla_Blvd-Ruthrauff\13.00_CAD\Construction_Documents\Civil\09C-11.dgn

08\20\09 4:54:32 PM aledesma

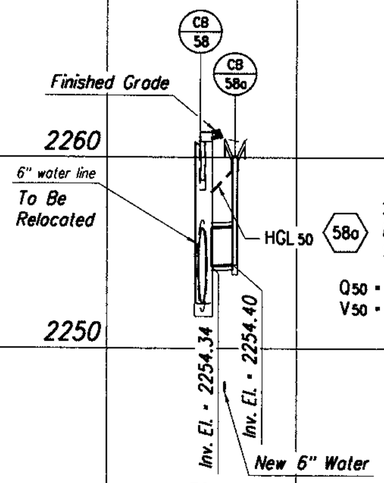

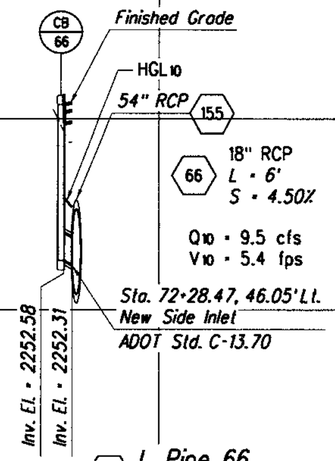

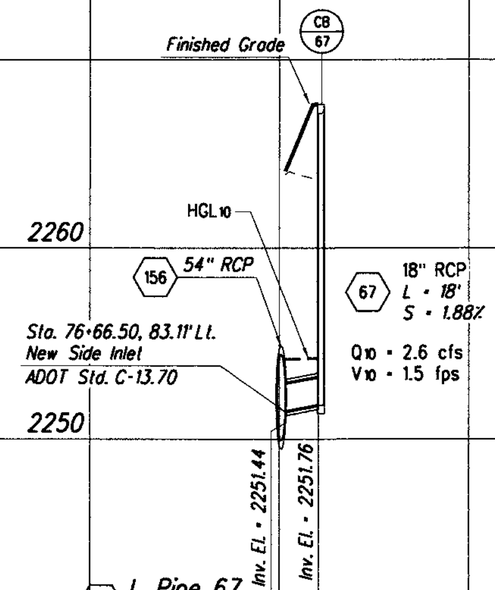

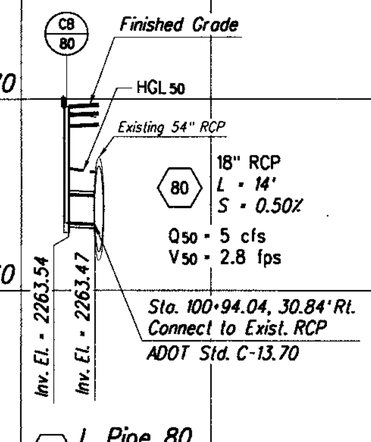

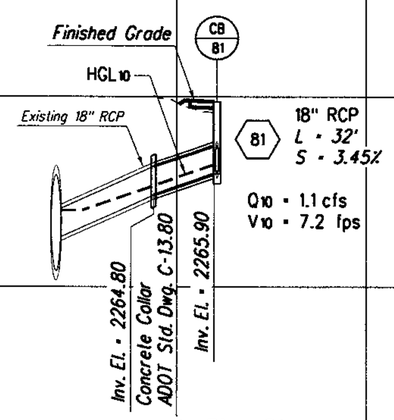

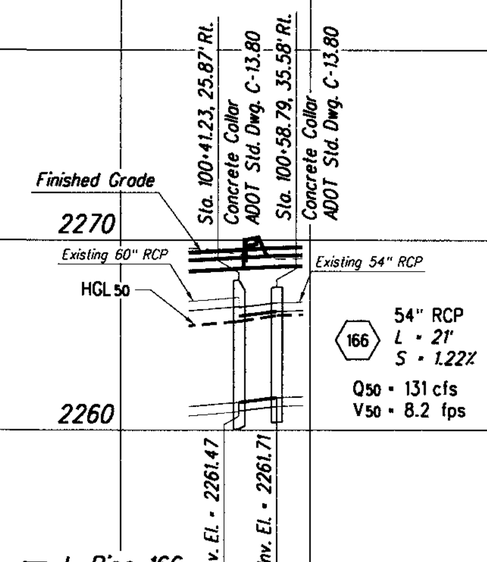

Arizona Blue Stake
1-800-
1-800-782-5348
Call Two Working Days Before You Dig

40 0 40 80

Scales	Horiz. 1"=40' Vert. 1"=4'	Sheet SD13 of SD15	Page 123 of 356

Pima County Department of Transportation

Priscilla S. Cornelio, P.E., Director

No.	Revision Description	Engineer	Date

		Date
Designed	A. Ledesma	July/2009
Drawn	A. Ledesma	July/2009
Checked	R. Brittain	July/2009
Proj. Engr.	R. Brittain	Aug/2009

Registered Professional Engineer
CERTIFICATE NO. 13762
ROBERT DEAN BRITTAIN
Date Signed 8-24-09
ARIZONA, U.S.A.
Expires 03-31-2011

HDR Engineering, Inc.
5210 East Williams Circle, Suite 530
Tucson, AZ 85711-4459
(520) 584-3600

LA CHOLLA BLVD.
RUTHRAUFF RD. TO RIVER RD.
STORM DRAIN LATERAL PIPE PROFILE

Project • 4LCITR

012145
00000000005914
Pima_County_Dept_of_Transportation\PCDOT-La_Cholla_Blvd-Ruthrauff\13.00_CAD\Construction_Documents\Civil\09C-12.dgn

08\20\09 4:54:36 PM aledesma

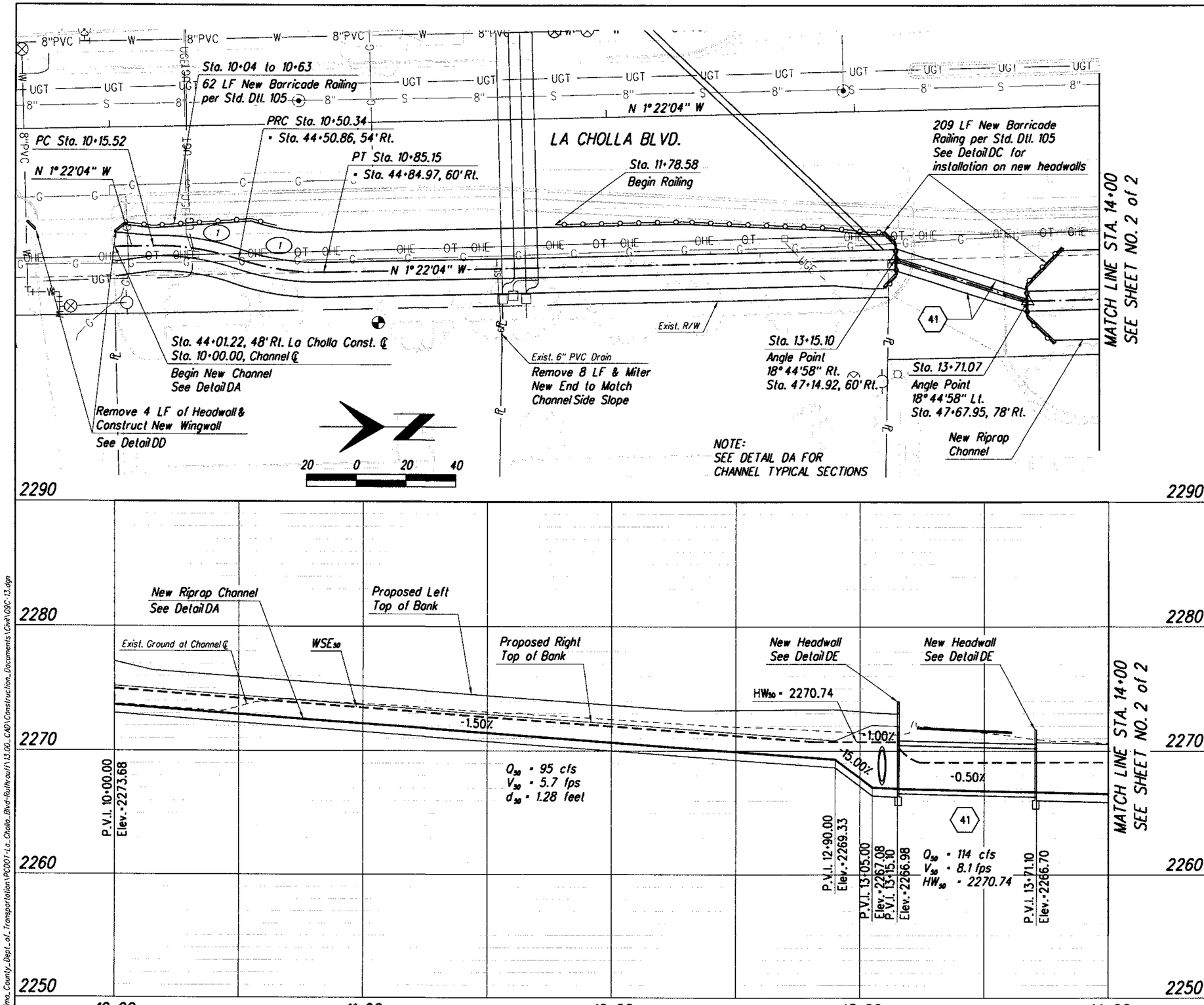

(41) 2 - 42" RCP, 56 LF, S=0.50%

(1)

℄ Channel Curve Data
Δ = 19°56'54"
R = 100'
L = 34.82'
T = 19.32'

Note:
For all new barricade railing use alternate location of lower rail as shown in Std. Dtl. 105.

No.	Revision Description	Engineer	Date

		Date
Designed	A. Ledesma	July 2009
Drawn	A. Ledesma	July 2009
Checked	R. Britton	July 2009
Proj. Engr.	R. Britton	Aug 2009

Priscilla S. Cornelio, P.E., Director

Registered Professional Engineer (Civil)
CERTIFICATE NO. 13762
ROBERT DEAN BRITTAN
Date Signed 8-24-09
ARIZONA, U.S.A.
Expires 03-31-2011

HDR Engineering, Inc.
5210 East Williams Circle, Suite 530
Tucson, AZ 85711-4459
(520) 584-3600

Pima County Department of Transportation

LA CHOLLA BL VD.
RUTHRAUFF RD. TO RIVER RD.
CHANNEL PLANS

Arizona Blue Stake
1-800-STAKE-IT
1-800-782-5348
Call Two Working Days Before You Dig

Scales	Horiz. 1"=20' Vert. 1"=4'	Sheet SD14 of SD15	Page 124 of 356

012145
0000000000053914
Pima_County_Dept_of_Transportation\PCDOT-La_Cholla_Blvd-Ruthrauff\13.00_CAD\Construction_Documents\Civil\09C-13.dgn

08\20\09 4:54:40 PM aledesma

Project = 4LCITR

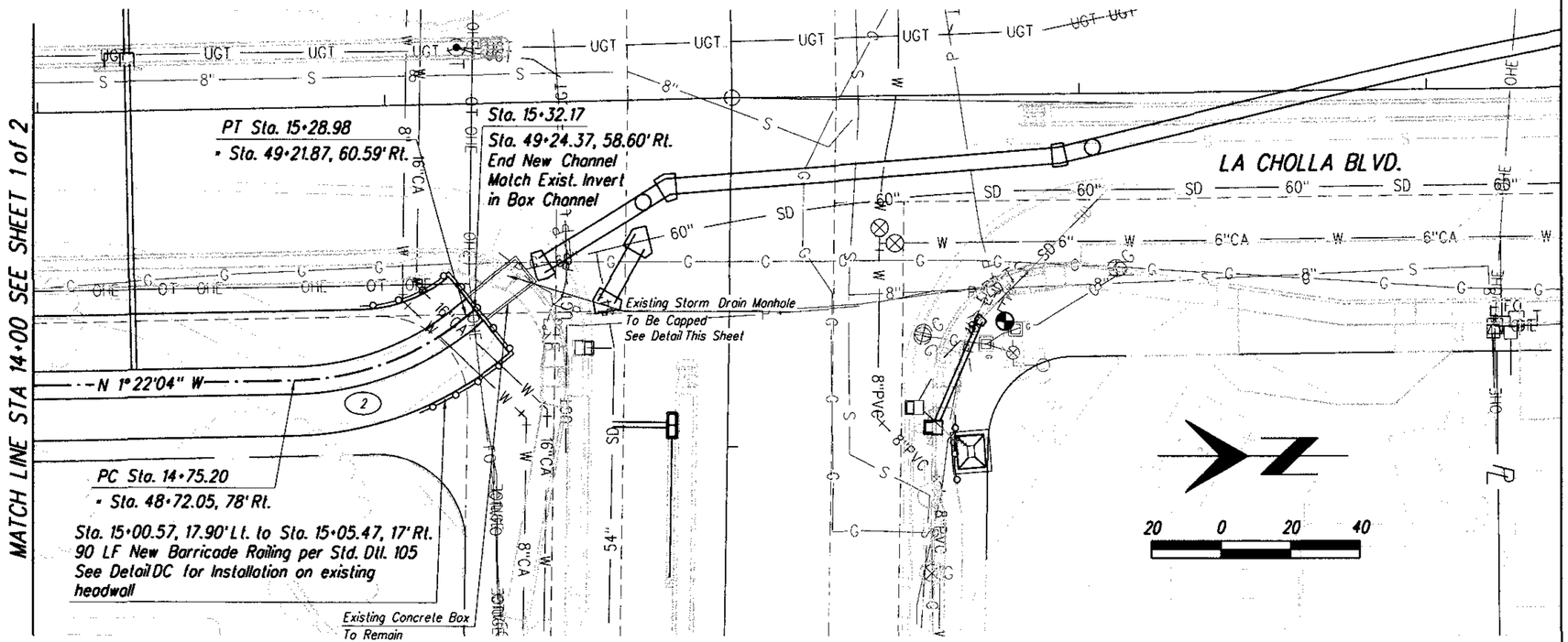

℄ Channel Curve Data
Δ = 38°30'59"
R = 80'
L = 53.78'
T = 27.95'

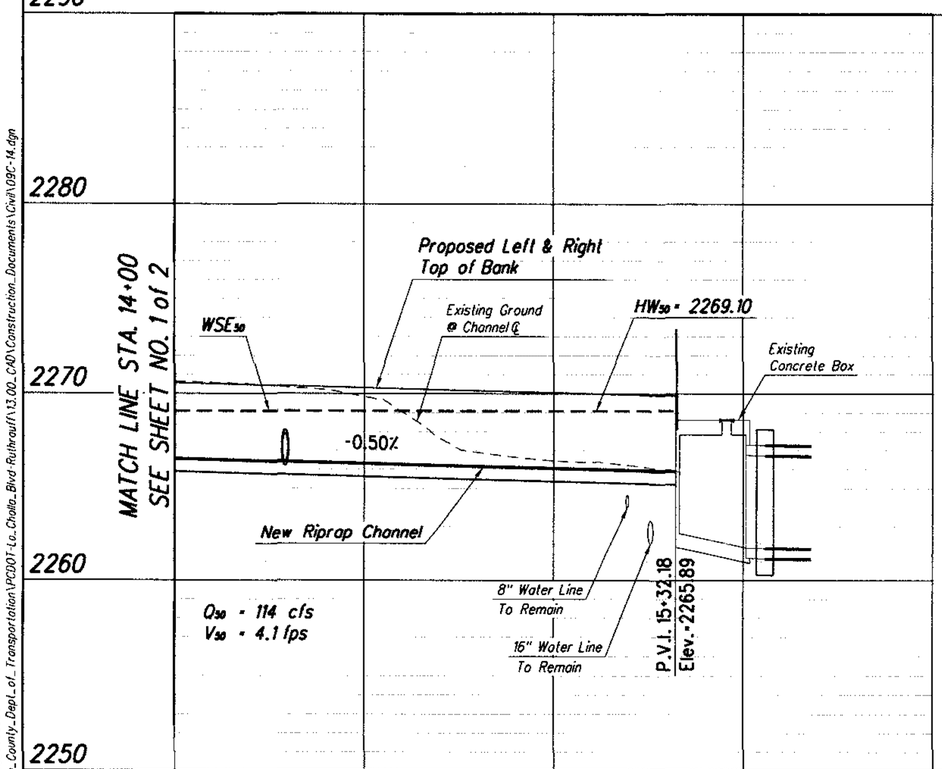

Note:
1. Manhole removal and steel plate placement shall be paid for under bid item #5050010 Manhole Adjustments.
2. Steel plate shall be primed and painted per section 610 of the standard specs.

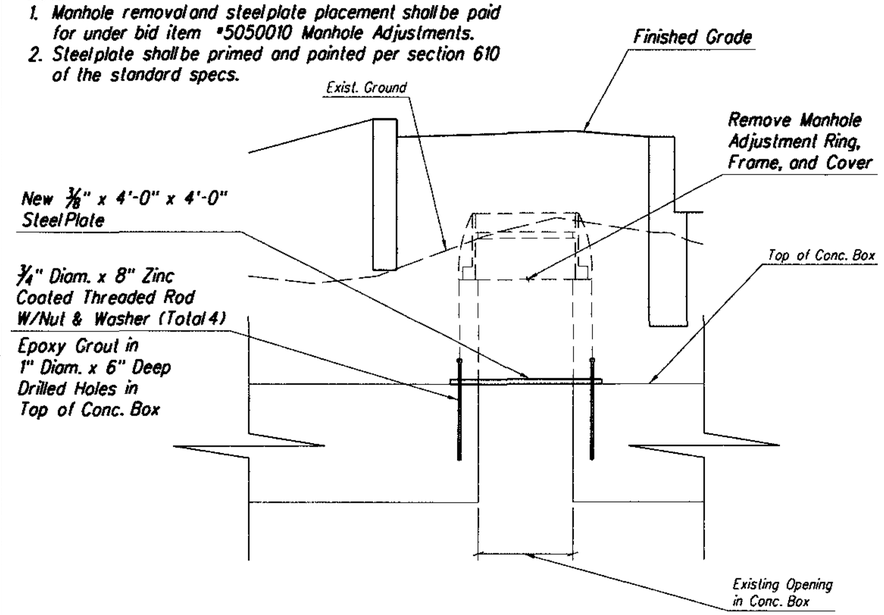

Manhole Cap Detail

Scale Horiz. 1"=2'
Scale Vert. 1"=1/2'

Arizona Blue Stake
1-800-STAKE-IT
1-800-782-5348
Call Two Working Days Before You Dig

Pima County Department of Transportation

Priscilla S. Cornelio, P.E., Director

No.	Revision Description	Engineer	Date

		Date
Designed	A. Ledesma	July/2009
Drawn	A. Ledesma	July/2009
Checked	R. Britton	July/2009
Proj. Engr.	R. Britton	Aug/2009

Registered Professional Engineer (Civil)
Certificate No. 13762
ROBERT DEAN BRITTON
Date Signed 8-24-09
ARIZONA, U.S.A.
Expires 03-31-2011

HDR Engineering, Inc.
5210 East Williams Circle, Suite 530
Tucson, AZ 85711-4459
(520) 584-3600

LA CHOLLA BLVD.
RUTHRAUFF RD. TO RIVER RD.
CHANNEL PLANS

Scales	Horiz. 1"=20' Vert. 1"=4'	Sheet SD15 of SD15	Page 125 of 356

Project = 4LCITR 4LCITR

012145
00000000005991 4
Pima_County_Dept_of_Transportation\PCDOT-La_Cholla_Blvd_Ruthrauff\13.00_CAD\Construction_Documents\Civil\09C-14.dgn

08\20\09 4:54:45 PM aledesma

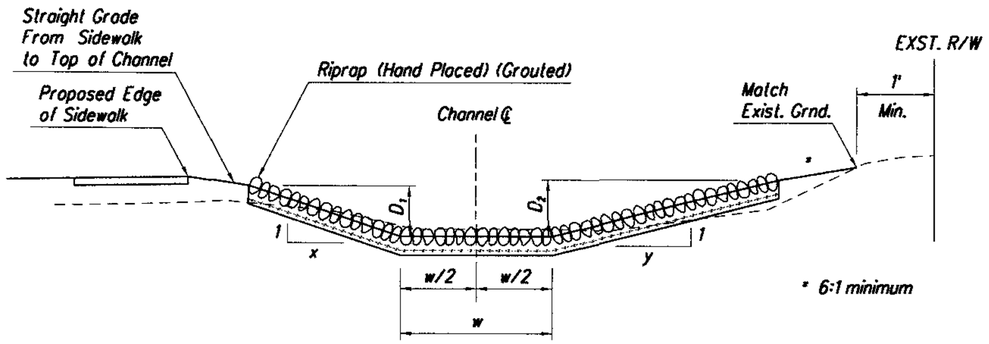

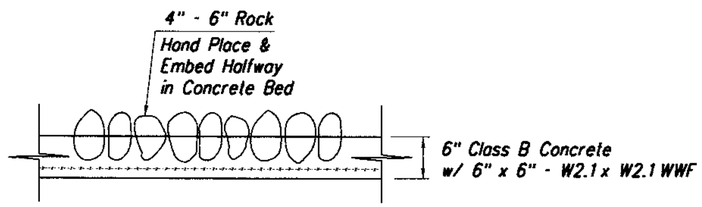

NOTES

1. This channel lining will be paid for under Item No. 9130009.

Sta. to Sta.	D_1	D_2	x	y	w
10+00.00 to 10+15.52	3.5' to 3'	1.5'	1	4	11.4' to 8'
10+15.52 to 10+50.34	3'	1.5'	1 to 4	4	8'
10+50.34 to 12+30.00	3'	1.5'	4	4	8'
12+30.00 to 12+90.00	3' - 4'	1.5'	4 to 2	4	8'
12+90.00 to 13+05.00	4' - 6'	1.5' to 5'	2 to 1	4 to 1.5	8'
13+05.00 to 13+15.10	6'	5'	1	1.5	8'
13+71.07 to 14+75.20	4'	4'	4	3	8'
14+75.20 to 15+31.65	4'	4'	4 to 2	3	8'

DETAIL DA

CHANNEL TYPICAL SECTION

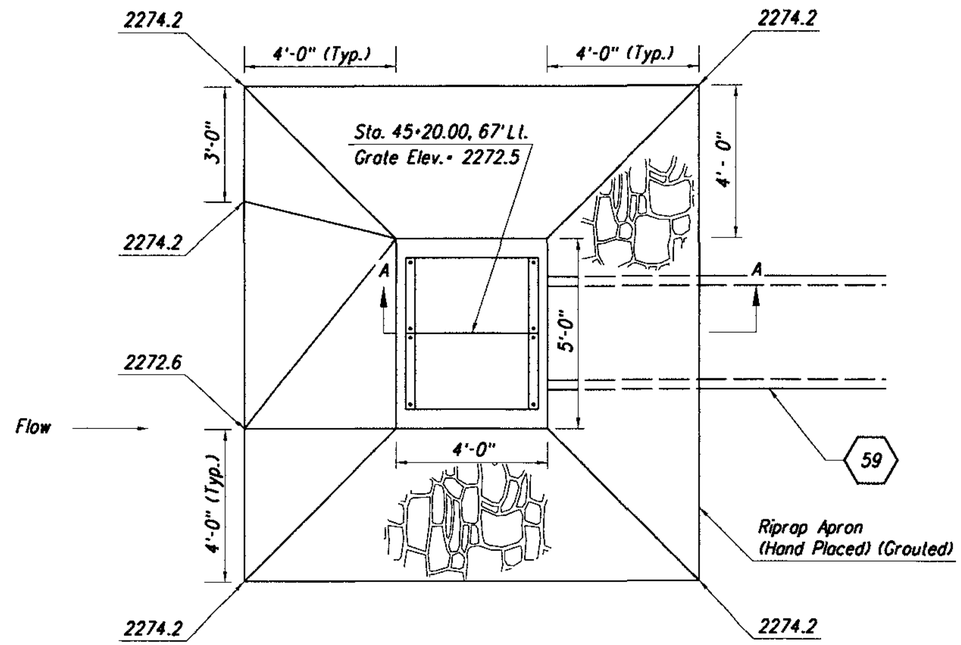

NOTES

1. See ADOT Std. Dwg. C-15.80 for all information not shown here.
2. This catch basin will be paid for under Item No. 5030778.
3. The riprap apron will be paid for under Item No. 9130009.

PLAN

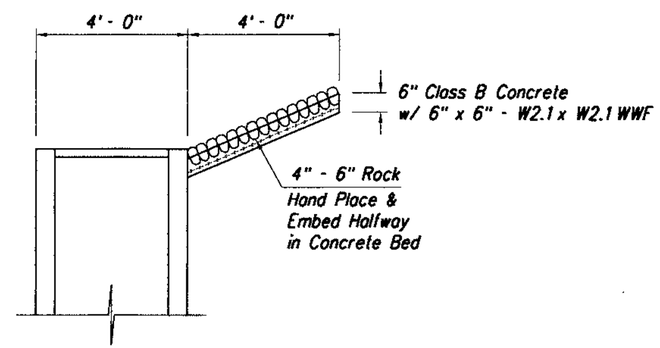

SECTION A - A

DETAIL DB

CATCH BASIN NO. 59

ADOT Std. Dwg. C-15.80
Modified with Two Grates

Arizona Blue Stake
1-800-STAKE-IT
1-800-782-5348
Call Two Working Days Before You Dig

No.	Revision Description	Engineer	Date

		Date
Designed	A. Ledesma	July/2009
Drawn	A. Ledesma	July/2009
Checked	R. Britton	July/2009
Proj. Engr.	R. Britton	Aug/2009

Priscilla S. Cornelio, P.E., Director

Registered Professional Engineer (Civil)
CERTIFICATE NO. 13767
ROBERT DEAN BRITTAIN
Date Signed 8-26-09
ARIZONA, U.S.A.
Expires 03-31-2011

HDR Engineering, Inc.
5210 East Williams Circle, Suite 530
Tucson, AZ 85711-4459
(520) 584-3600

Pima County Department of Transportation

LA CHOLLA BLVD.
RUTHRAUFF RD. TO RIVER RD.
STORM DRAIN DETAILS

Scales	Horiz. NTS / Vert. NTS	Sheet	DD1 of DD13	Page	126 of 356

012145
00000000005994
Pima_County_Dept_of_Transportation\PCDOT-La_Cholla_Blvd-Ruthrauff\13.00_CAD\Construction_Documents\Civil\170-01.dgn

08\20\09 4:54:49 PM aledesma

Project # 4LCITR

Note:

See COT/PC
Standard Detail 105
for Barricade Railing

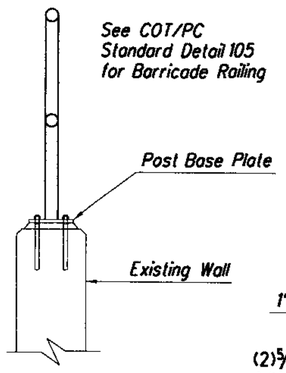

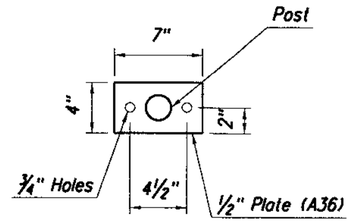

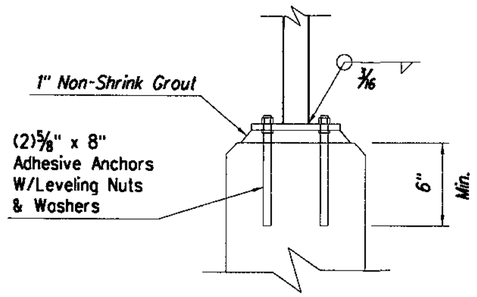

Post Base Plate Detail
Installation At Existing Headwalls

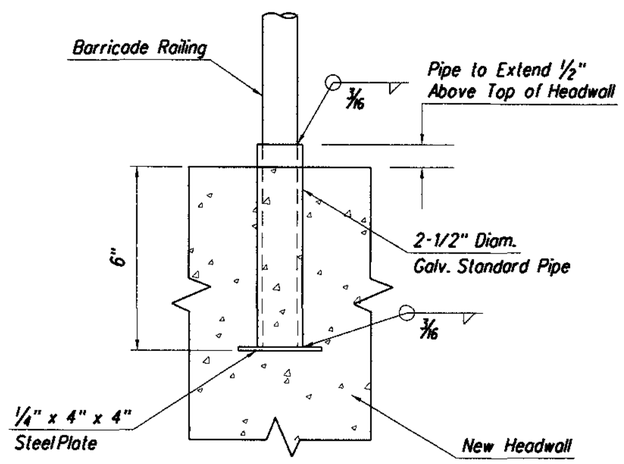

Post Sleeve Detail
Installation At New Headwalls

Note:

See PC/COT
Standard Detail 105
for Barricade Railing

DETAIL DC

BARRICADE RAILING INSTALLATION

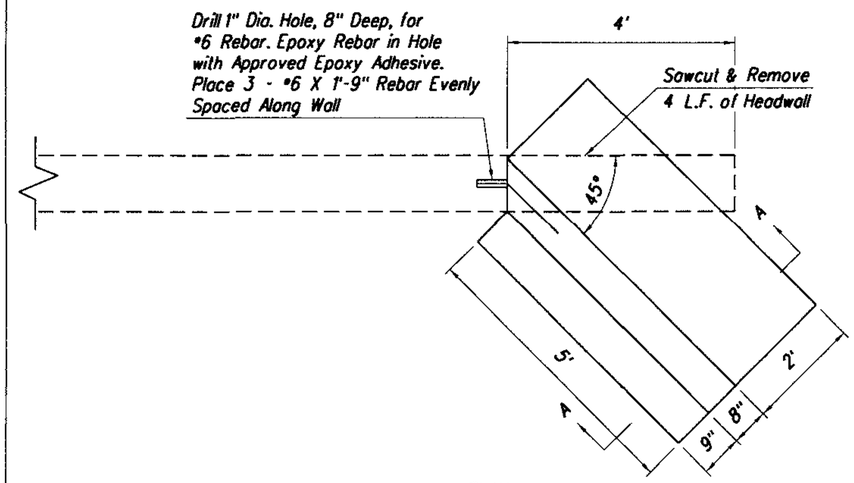

PLAN

Notes:

1. All Concrete Shall be Class S, f'c=3000 psi.
2. Reinforcing Steel Shall be Grade 40 or 60.
3. All Bend Dimensions Shall be Out to Out of Bars.
4. All Reinforcing Steel Shall Have 2" of Clear Cover Unless Noted Otherwise.
5. These Wingwalls Will be Paid for Under Item No. 6016110.

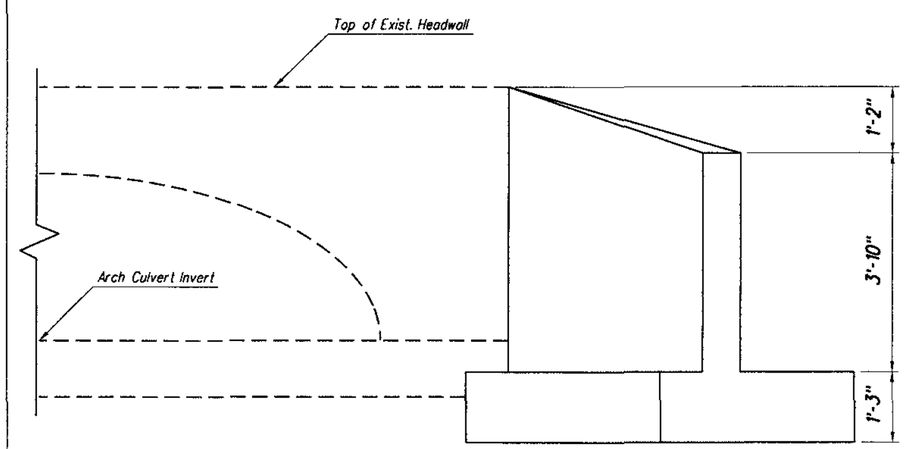

ELEVATION

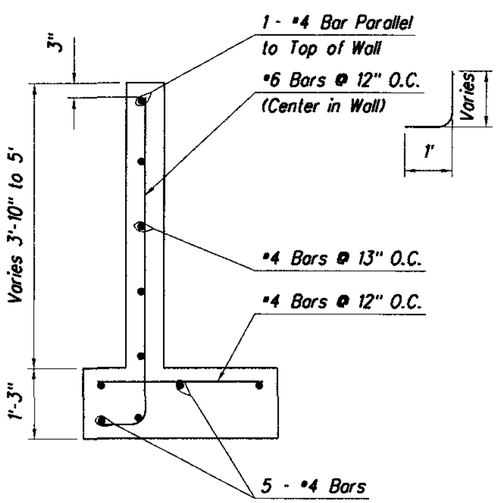

SECTION A-A

DETAIL DD

ARCH CULVERT WINGWALL

Arizona Blue Stake
1-800-STAKE-IT
1-800-782-5348
Call Two Working Days Before You Dig

Scales	Horiz. NTS / Vert. NTS	Sheet	DD2 of DD13	Page	127 of 356

Pima County Department of Transportation

Priscilla S. Cornelio, P.E., Director

No.	Revision Description	Engineer	Date

		Date
Designed	L. Barela	July/2009
Drawn	J. Amos	July/2009
Checked	R. Brittain	July/2009
Proj. Engr.	R. Brittain	Aug/2009

Registered Professional Engineer (Civil) Certificate No. 13762 ROBERT DEAN BRITTAIN Date Signed 8-24-09 Arizona, U.S.A.

Expires 03-31-2011

HDR Engineering, Inc.
5210 East Williams Circle, Suite 530
Tucson, AZ 85711-4459
(520) 584-3600

LA CHOLLA BL VD.
RUTHRAUFF RD. TO RIVER RD.
STORM DRAIN DETAILS

012145
000000000059914
Pima_County_Dept_of_Transportation\PCDOT-La_Cholla_Blvd-Ruthrauff\13.00_CAD\Construction_Documents\Civil\17D-02.dgn

08\20\09 4:54:53 PM aledesma

Project # 4LCITR

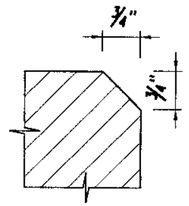

Chamfer Detail
NTS
Chamfer all exposed corners

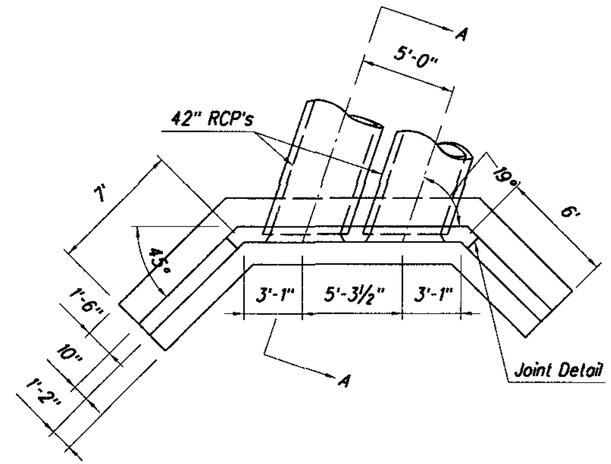

Plan- Inlet Headwall
1/4" = 1'

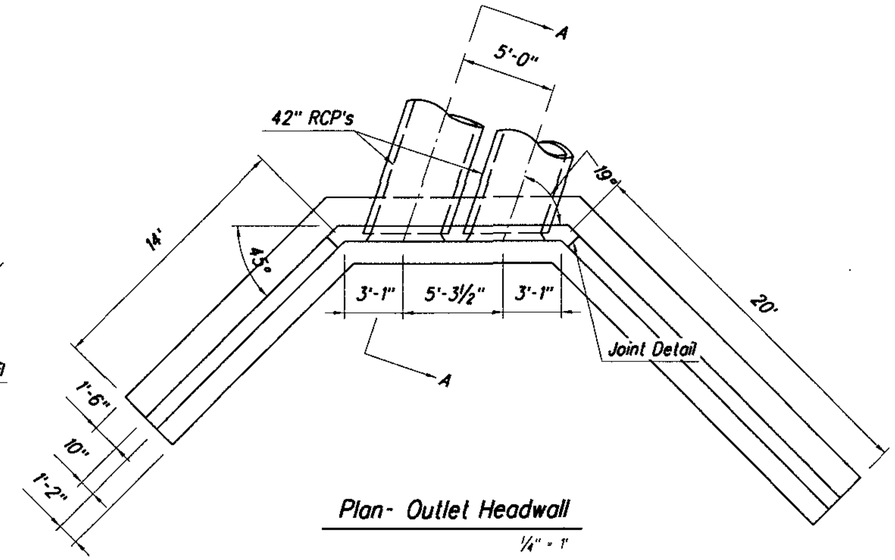

Plan- Outlet Headwall
1/4" = 1'

Notes:
1. All concrete shall be Class S, f'c=3000 psi.
2. Reinforcing steel shall be Grade 40 or 60.
3. All bend dimensions for reinforcing steel shall be out-to-out of bars.
4. All reinforcing steel shall have 2" of clear cover unless noted otherwise.
5. These headwalls will be paid for under Item No. 6016087.

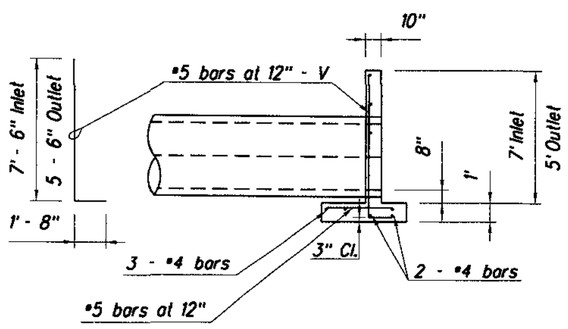

Section A-A
1/4" = 1'

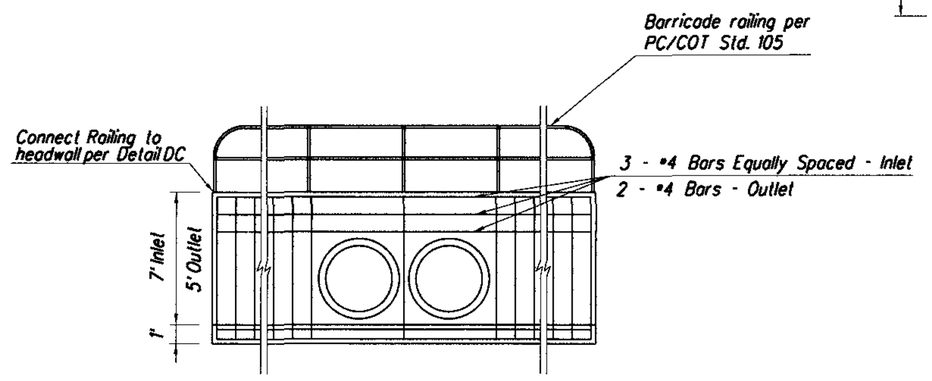

Elevation
1/4" = 1'

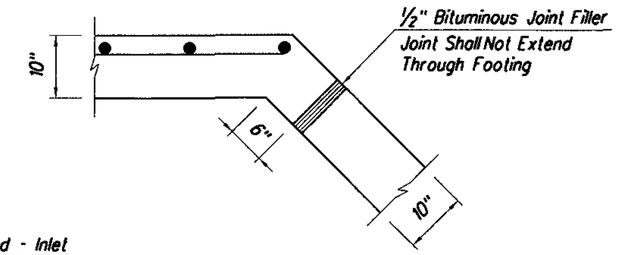

Joint Detail
1" = 1'

DETAIL DE

SPECIAL HEADWALL

Arizona Blue Stake
1-800-STAKE-IT
1-800-782-5348
Call Two Working Days Before You Dig

Scales	Horiz. As Noted Vert. As Noted	Sheet	DD3 of DD13	Page	128 of 356

Pima County Department of Transportation
Priscilla S. Cornelio, P.E., Director

No.	Revision Description	Engineer	Date

		Date
Designed	A. Ledesma	July/2009
Drawn	A. Ledesma	July/2009
Checked	R. Brittain	July/2009
Proj. Engr.	R. Brittain	Aug/2009

Registered Professional Engineer (Civil)
CERTIFICATE NO. 13762
ROBERT DEAN BRITTAIN
Date Signed 8-24-09
ARIZONA, U.S.A.
Expires 03-31-2011

HDR Engineering, Inc.
5210 East Williams Circle, Suite 530
Tucson, AZ 85711-4459
(520) 584-3600

LA CHOLLA BLVD.
RUTHRAUFF RD. TO RIVER RD.
STORM DRAIN DETAILS

012145
00000000005994
Pima_County_Dept_of_Transportation\PCDOT-La_Cholla_Blvd-Ruthrauff\13.00_CAD\Construction_Documents\Civil\170-03.dgn

08\20\09 4:54:57 PM aledesma

Project # 4LCITR

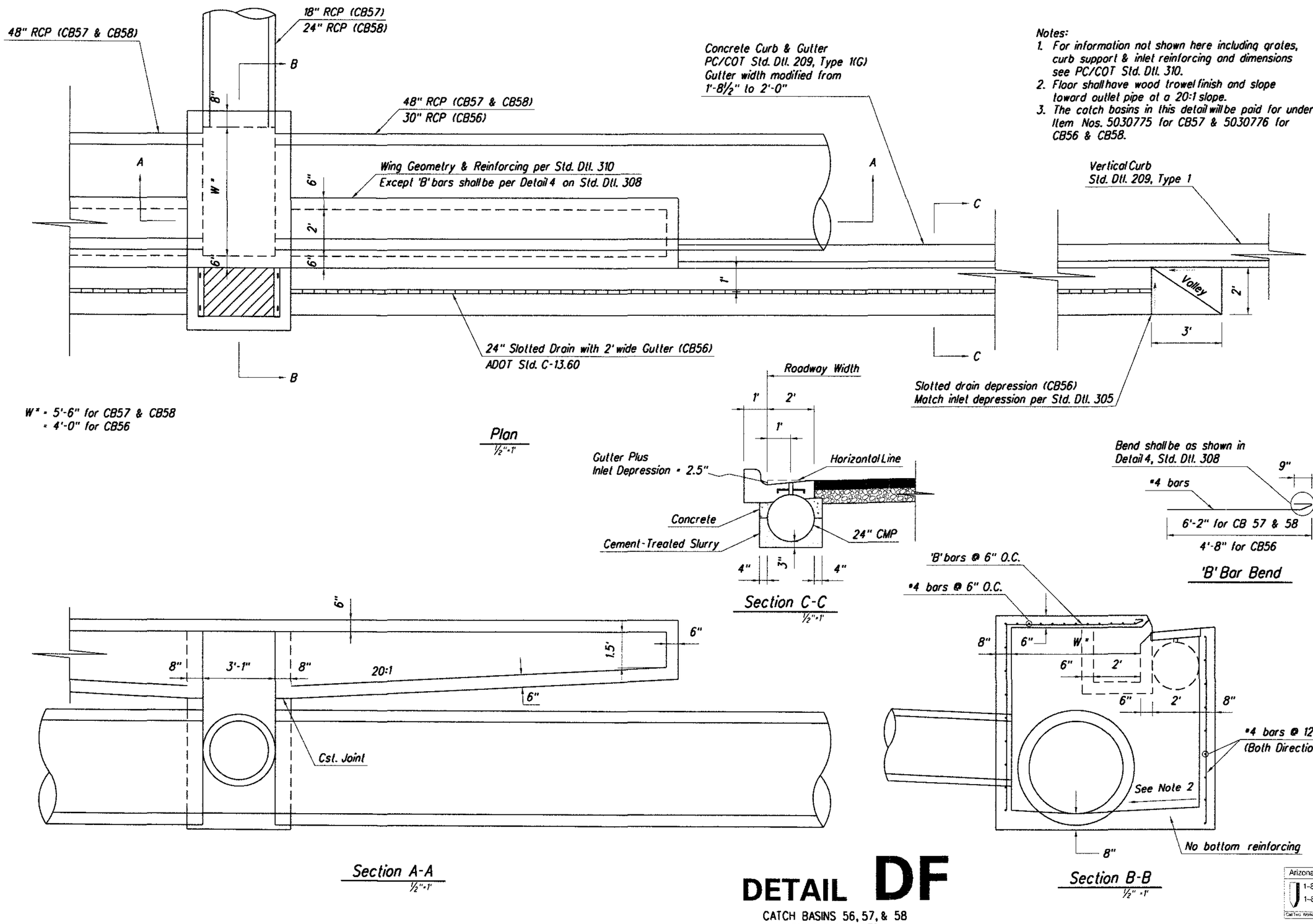

Notes:
1. For information not shown here including grates, curb support & inlet reinforcing and dimensions see PC/COT Std. Dtl. 310.
2. Floor shall have wood trowel finish and slope toward outlet pipe at a 20:1 slope.
3. The catch basins in this detail will be paid for under Item Nos. 5030775 for CB57 & 5030776 for CB56 & CB58.

DETAIL DF

CATCH BASINS 56, 57, & 58
TYPE 5 MODIFIED

Arizona Blue Stake
1-800-STAKE-IT
1-800-782-5348
Call Two Working Days Before You Dig

No.	Revision Description	Engineer	Date

		Date
Designed	A. Ledesma	July/2009
Drawn	A. Ledesma	July/2009
Checked	R. Brittain	July/2009
Proj. Engr.	R. Brittain	July/2009

Priscilla S. Cornelio, P.E., Director

Registered Professional Engineer (Civil)
Certificate No. 13762
ROBERT DEAN BRITTAIN
Date Signed 8-7-09
ARIZONA, U.S.A.
Expires 03-31-2011

Pima County Department of Transportation

HDR Engineering, Inc.
5210 East Williams Circle, Suite 530
Tucson, AZ 85711-4459
(520) 584-3600

LA CHOLLA BLVD.
RUTHRAUFF RD. TO RIVER RD.
STORM DRAIN DETAILS

Scales	Horiz. As Noted Vert. As Noted	Sheet DD4 of DD13	Page 129 of 356

012145
0000000000059914
Pima_County_Dept._of_Transportation\PCDOT-La_Cholla_Blvd-Ruthrauff\13.00_CAD\Construction_Documents\Civil\17D-04.dgn

08\20\09 4:55:00 PM aledesma

Project # 4LCITR

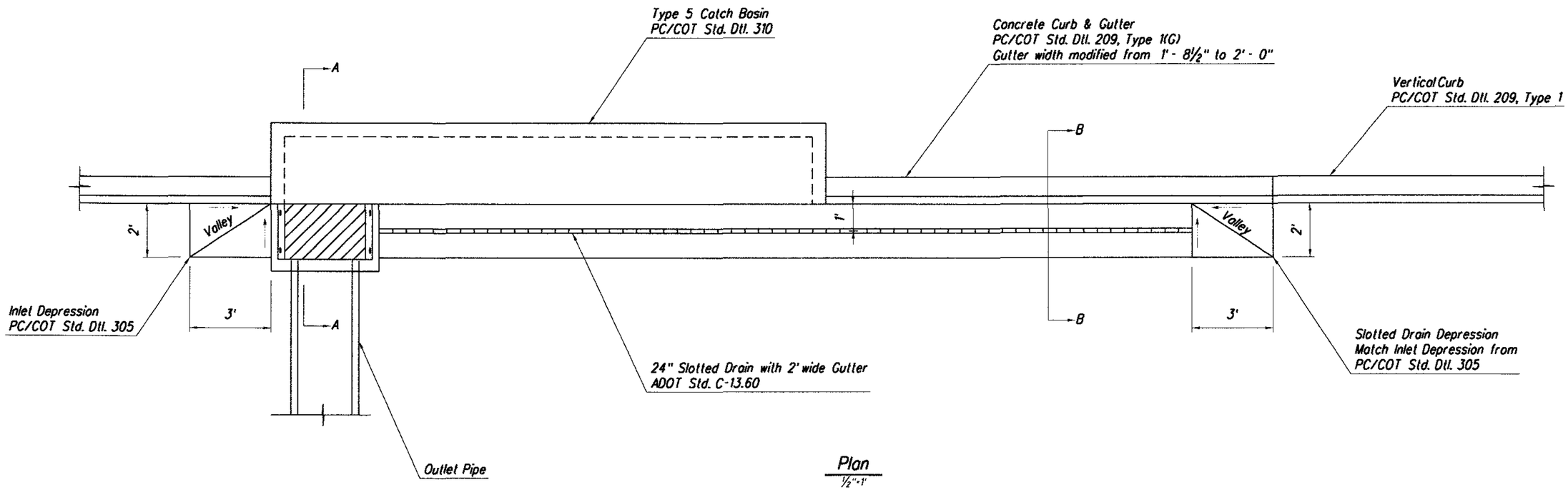

Plan
½"=1'

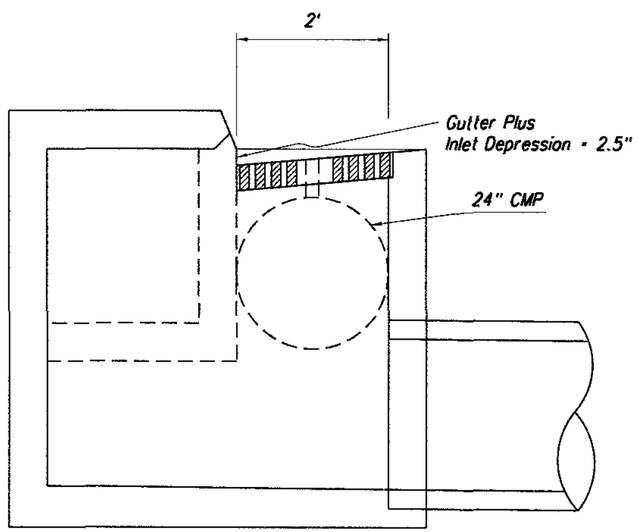

Section A-A
1"=1'

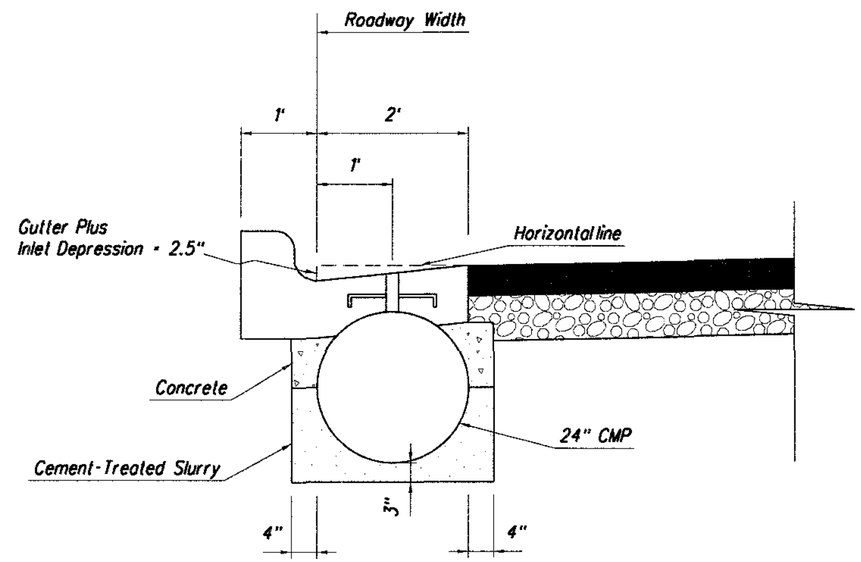

Section B-B
1"=1'

Notes:
These catch basins will be paid for under Item Nos. 5030763 for CB70 and 5030764 for CB52 and CB54.

DETAIL DG

CATCH BASINS 52, 54, & 70
TYPE 5 - MODIFIED

Arizona Blue Stake
1-800-STAKE-IT
1-800-782-5348
Call Two Working Days Before You Dig

No.	Revision Description	Engineer	Date

		Date
Designed	A. Ledesma	July/2009
Drawn	A. Ledesma	July/2009
Checked	R. Brittain	July/2009
Proj. Engr.	R. Brittain	Aug/2009

Priscilla S. Cornelio, P.E., Director

Registered Professional Engineer
CERTIFICATE NO. 13782
ROBERT DEAN BRITTAIN
DATE SIGNED 8-24-09
ARIZONA, U.S.A.
Expires 03-31-2011

HDR Engineering, Inc.
5210 East Williams Circle, Suite 530
Tucson, AZ 85711-4459
(520) 584-3600

Pima County Department of Transportation

LA CHOLLA BLVD.
RUTHRAUFF RD. TO RIVER RD.
STORM DRAIN DETAILS

Scales	Horiz. As Noted	Sheet	DD5 of DD13	Page	130 of 356
	Vert. As Noted				

012145
00000000005991
Pima_County_Dept_of_Transportation\PCDOT-Lo_Cholla_Blvd-Ruthrauff\13.00_CAD\Construction_Documents\Civil\17D-05.dgn

08\20\09 4:55:04 PM aledesma

Project = 4LCITR

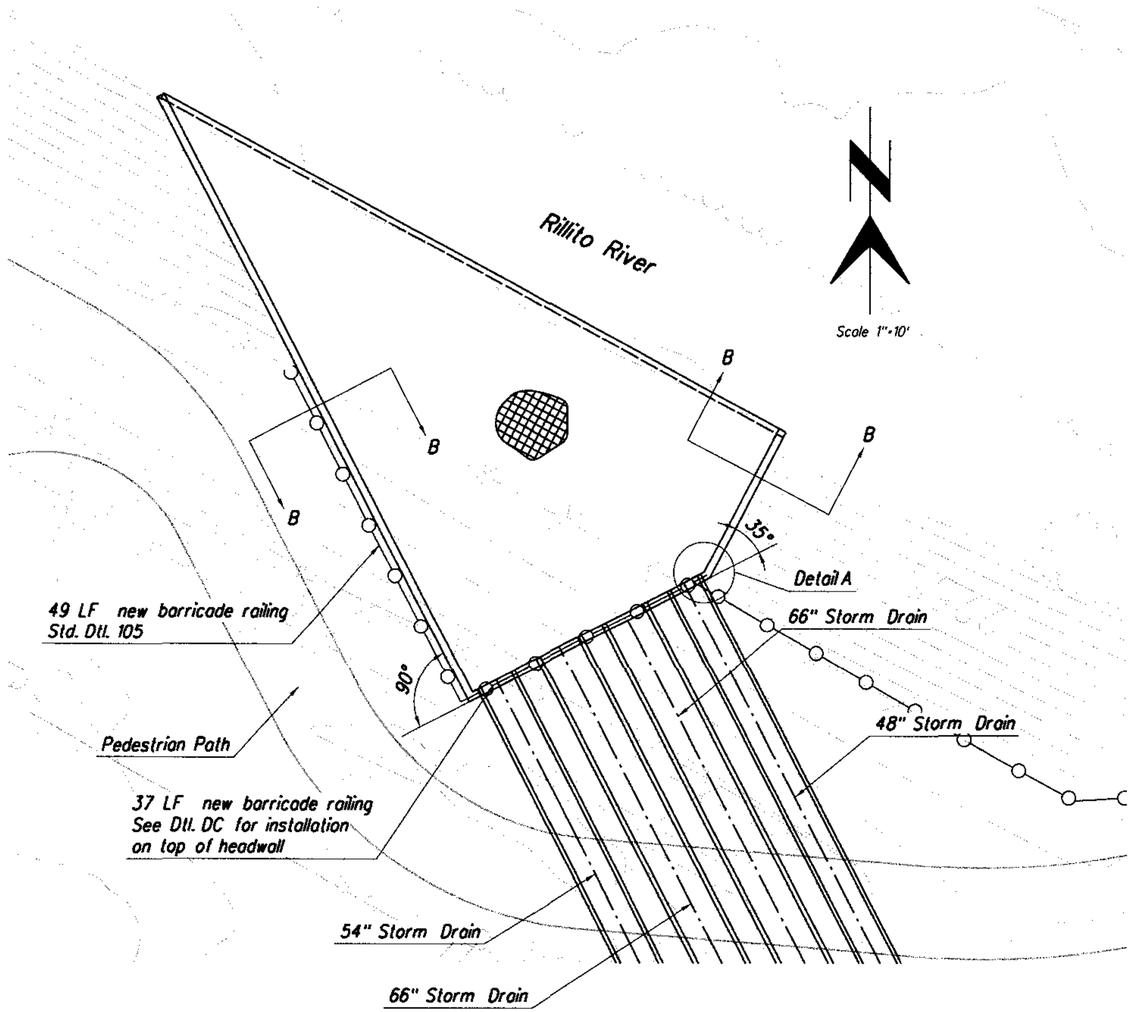

Plan

Notes:
1. All concrete shall be class S, f'c = 3000 psi.
2. All reinforcing steel shall be Grade 60.
3. All reinforcing steel shall have 2 inches clear cover unless noted otherwise.
4. Chamfer all exposed corners 3/4" per Chamfer Detail in Detail DE.
5. This outlet structure will be paid under Item No. 6016080.
6. A formliner shall be used for the exposed faces of the walls. This shall match the formliner for the bridge columns shown on sheet S57. Provide an additional 1" of wall thickness (13" total) to account for formliner.

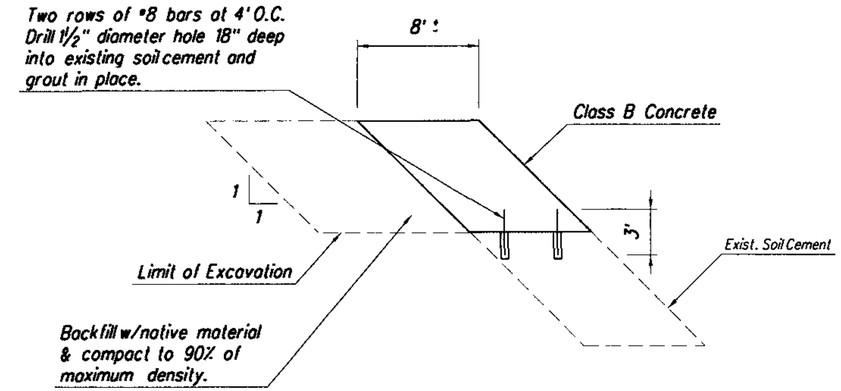

Soil Cement Replacement
NTS

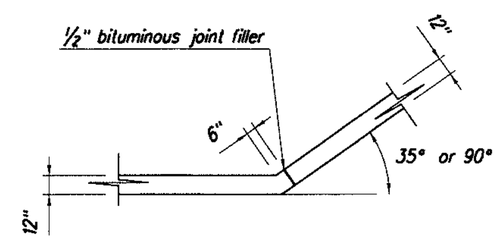

Detail A
1/2"=1'

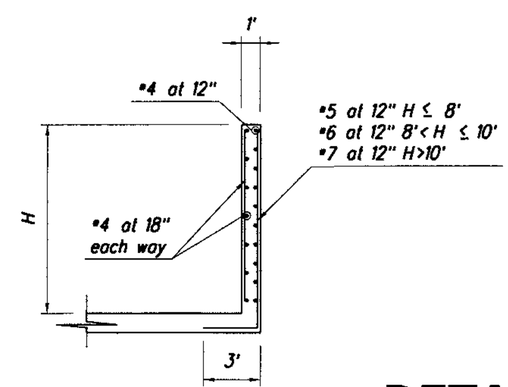

Section B-B
1/2"=1'

DETAIL DH

OUTLET STRUCTURE
SHEET 1 OF 2

No.	Revision Description	Engineer	Date

		Date
Designed	A. Ledesma	July/2009
Drawn	A. Ledesma	July/2009
Checked	R. Brittain	July/2009
Proj. Engr.	R. Brittain	Aug/2009

Priscilla S. Cornelio, P.E., Director

Registered Professional Engineer (Civil) CERTIFICATE NO. 13762 ROBERT DEAN BRITTAIN Date Signed 8-24-09 ARIZONA, U.S.A.

Expires 03-31-2011

HDR Engineering, Inc.
5210 East Williams Circle, Suite 530
Tucson, AZ 85711-4459
(520) 584-3600

Pima County Department of Transportation

LA CHOLLA BLVD.
RUTHRAUFF RD. TO RIVER RD.
STORM DRAIN DETAILS

Scales	Horiz. As Noted Vert. As Noted	Sheet	DD6 of DD13	Page	131 of 356

012145
0000000000039914
Pima_County_Dept_of_Transportation\PCDOT-La_Cholla_Blvd-Ruthrauff\13.00_CAD\Construction_Documents\Civil\170-06.dgn

08\20\09 4:55:08 PM aledesma

Project # 4LCITR

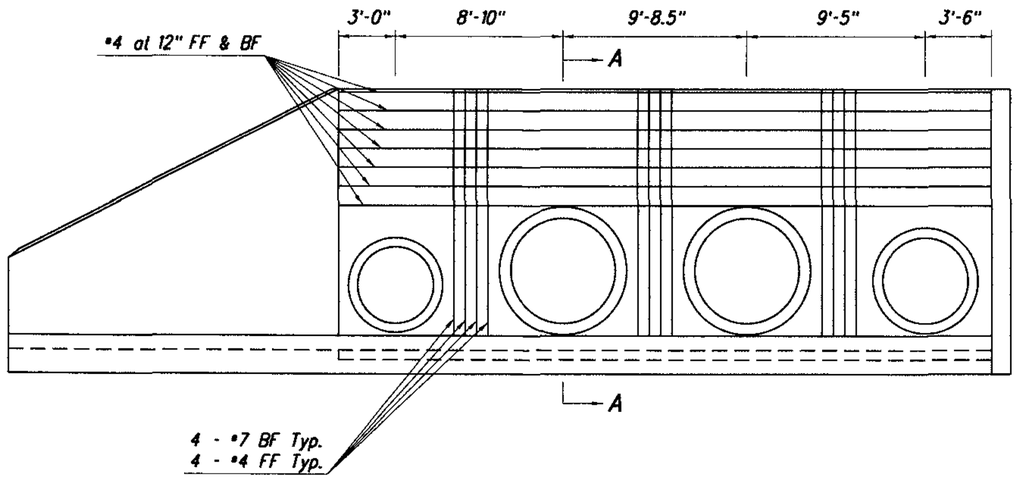

Elevation
1/4"=1'

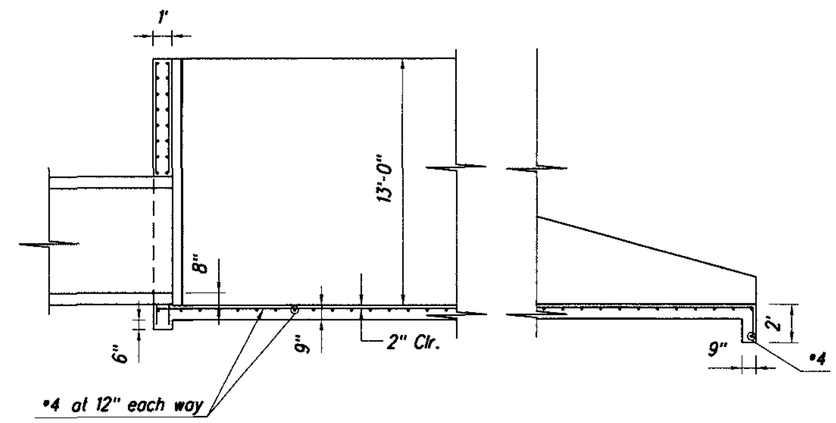

Section A-A
1/4"=1'

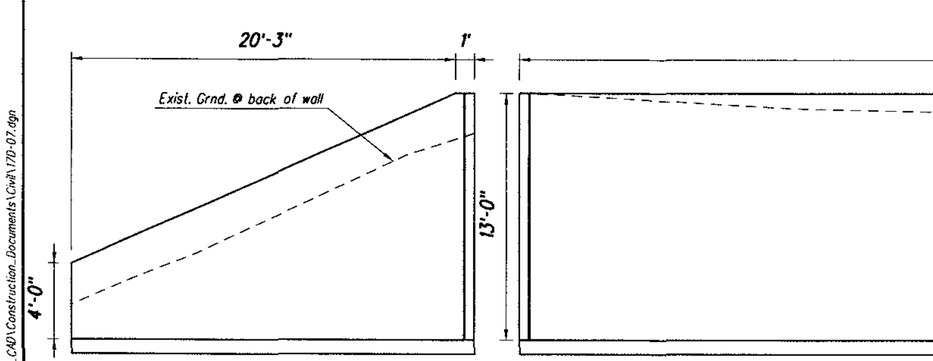

Left Wing Elevation
1/4"=1'

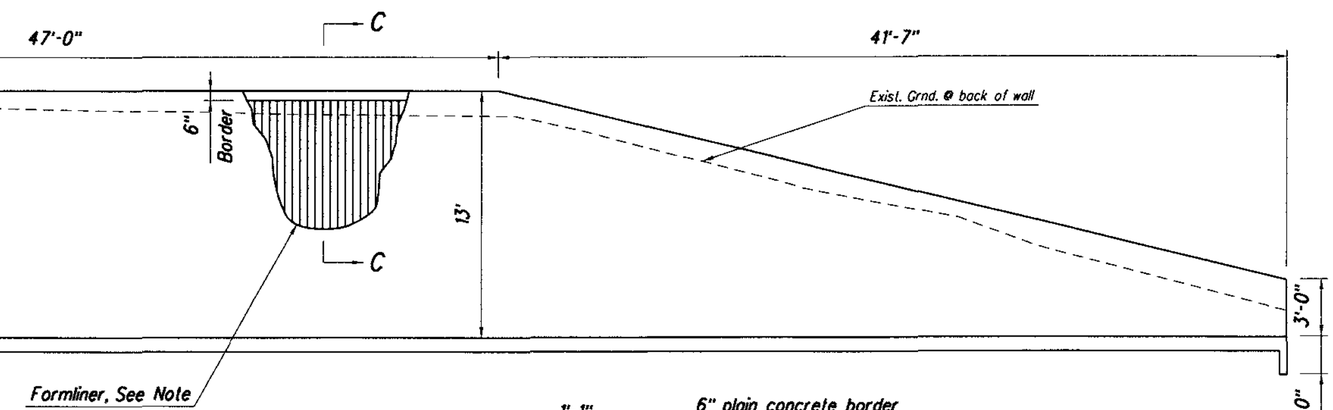

Right Wing Elevation
1/4"=1'

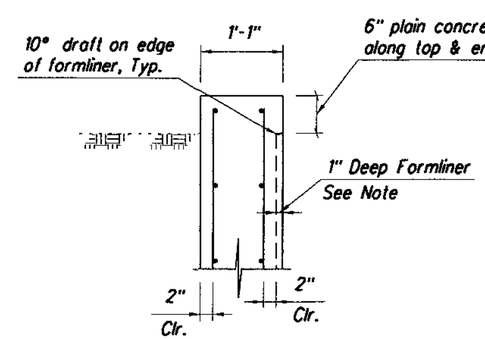

Section C-C
1"=1'

Note:
A formliner shall be used for the exposed faces of the headwall and wingwalls. This shall match the formliner for the bridge columns shown on sheet S57. Provide an additional 1" of wall thickness (13" total) to account for formliner.

DETAIL DH

OUTLET STRUCTURE
SHEET 2 OF 2

Scales	Horiz. As Noted / Verl. As Noted	Sheet	DD7 of DD13	Page	132 of 356

Pima County Department of Transportation

LA CHOLLA BLVD.
RUTHRAUFF RD. TO RIVER RD.
STORM DRAIN DETAILS

HDR Engineering, Inc.
5210 East Williams Circle, Suite 530
Tucson, AZ 85711-4459
(520) 584-3600

Registered Professional Engineer (Civil)
Certificate No. 13762
ROBERT DEAN BRITTAIN
Date Signed 8-24-09
ARIZONA, U.S.A.
Expires 03-31-2011

No.	Revision Description	Engineer	Date

Priscilla S. Cornelio, P.E., Director

		Date
Designed	A. Ledesmo	July/2009
Drawn	A. Ledesmo	July/2009
Checked	R. Brittain	July/2009
Proj. Engr.	R. Brittain	Aug/2009

012145
0000000000059914
Pima_County_Dept_of_Transportation\PCDOT-La_Cholla_Blvd-Ruthrauff\13.00_CAD\Construction_Documents\Civil\170-07.dgn

08\20\09 4:55:12 PM aledesma

Project # 4LCITR

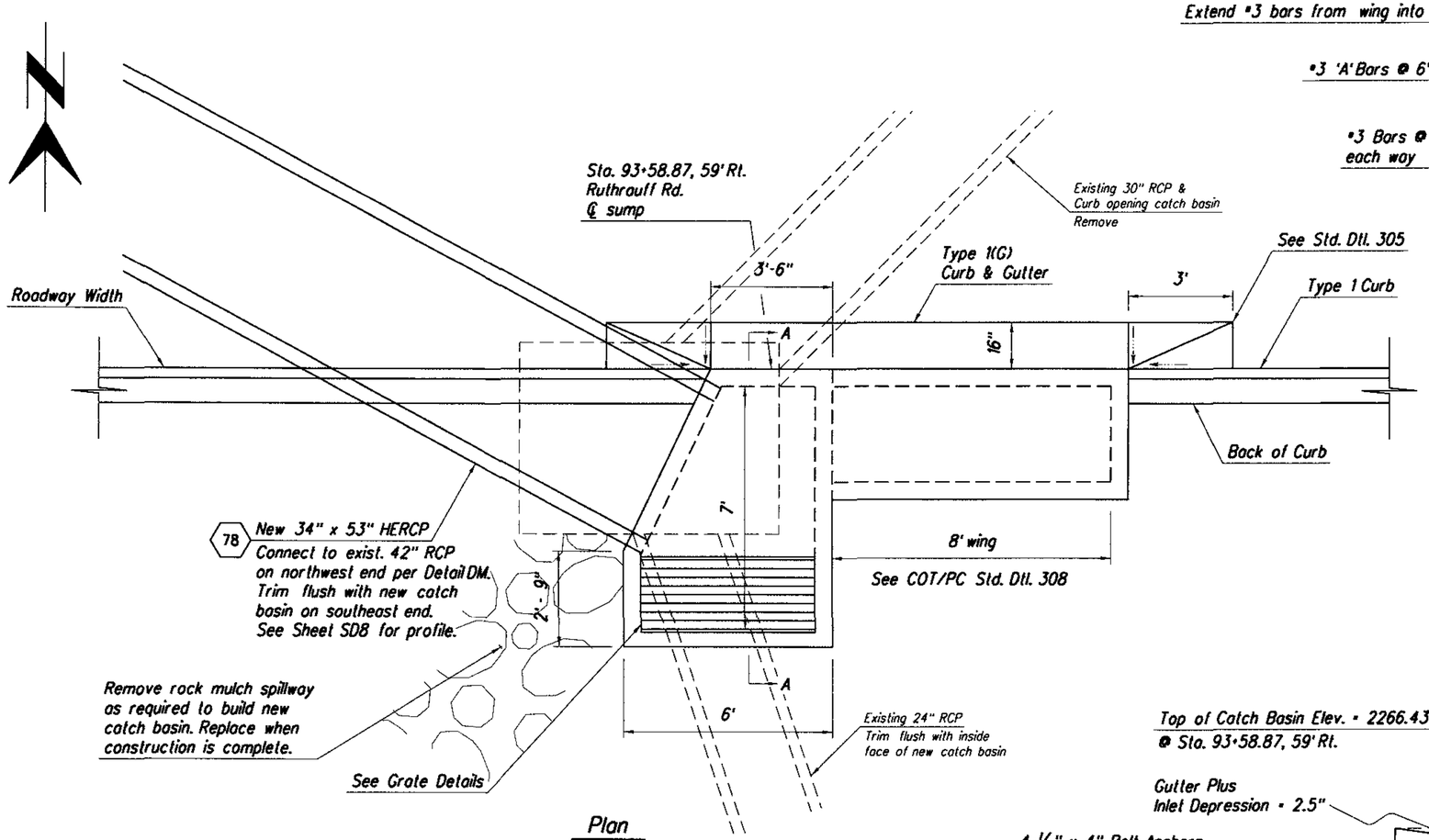

Plan
½" = 1'

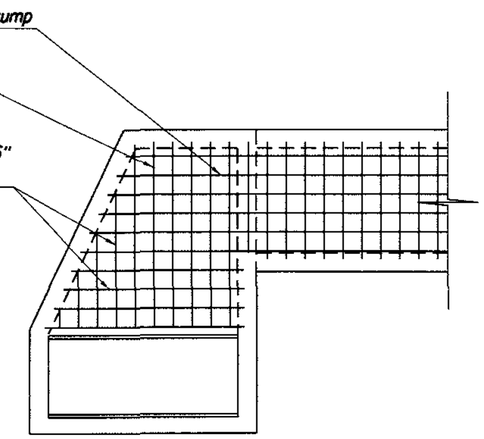

Sump Roof Reinforcing
½" = 1'

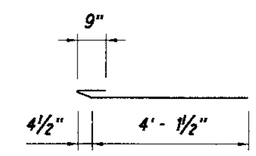

"A" Bars
½" = 1'

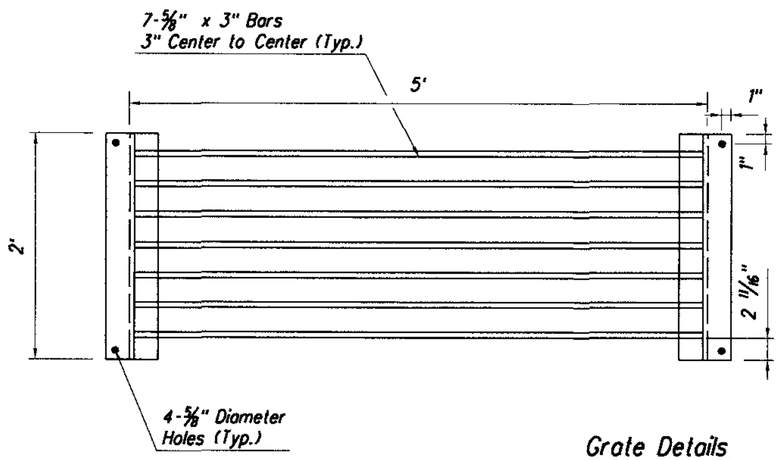

Grate Details
NTS

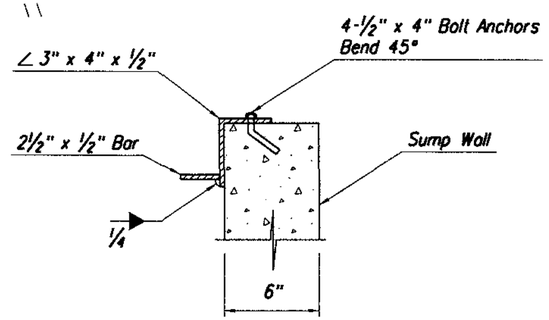

Notes:

1. For all information not shown here, see PC/COT Std. Dtl. 308.
2. All work shown in this detail will be paid under Item No. 5030777.
3. Grate assembly shall be given one shop coat of Paint No. 1.

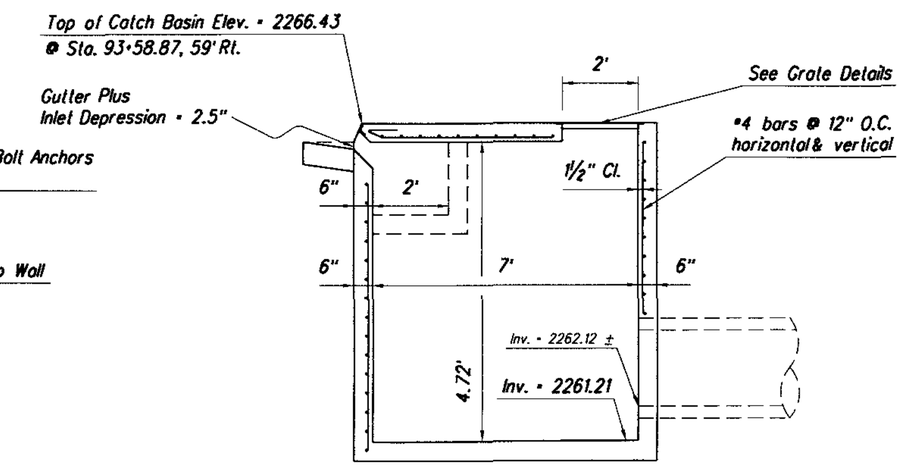

Section A-A - Station 93+58.87
½" = 1'

DETAIL DI

CATCH BASIN 78
COT/PC STANDARD DETAIL 308 - MODIFIED

Arizona Blue Stake
1-800-STAKE-IT
1-800-782-5348
Call Two Working Days Before You Dig

Scales	Horiz. As Noted / Vert. As Noted	Sheet DD8 of DD13	Page 133 of 356

Pima County Department of Transportation
Priscilla S. Cornelio, P.E., Director

No.	Revision Description	Engineer	Date

		Date
Designed	A. Ledesma	July 2009
Drawn	A. Ledesma	July 2009
Checked	R. Brittain	July 2009
Proj. Engr.	R. Brittain	Aug 2009

Registered Professional Engineer (Civil)
Certificate No. 13787
ROBERT DEAN BRITTAIN
Date Signed 8-21-09
Arizona, U.S.A.
Expires 03-31-2011

HDR Engineering, Inc.
5210 East Williams Circle, Suite 530
Tucson, AZ 85711-4459
(520) 584-3600

LA CHOLLA BLVD.
RUTHRAUFF RD. TO RIVER RD.
STORM DRAIN DETAILS

012145
00000000000059914
Pima_County_Dept_of_Transportation\PCDOT-La_Cholla_Blvd-Ruthrauff\13.00_CAD\Construction_Documents\Civil\17D-08.dgn

08\20\09 4:55:15 PM aledesma

Project # 4LCITR

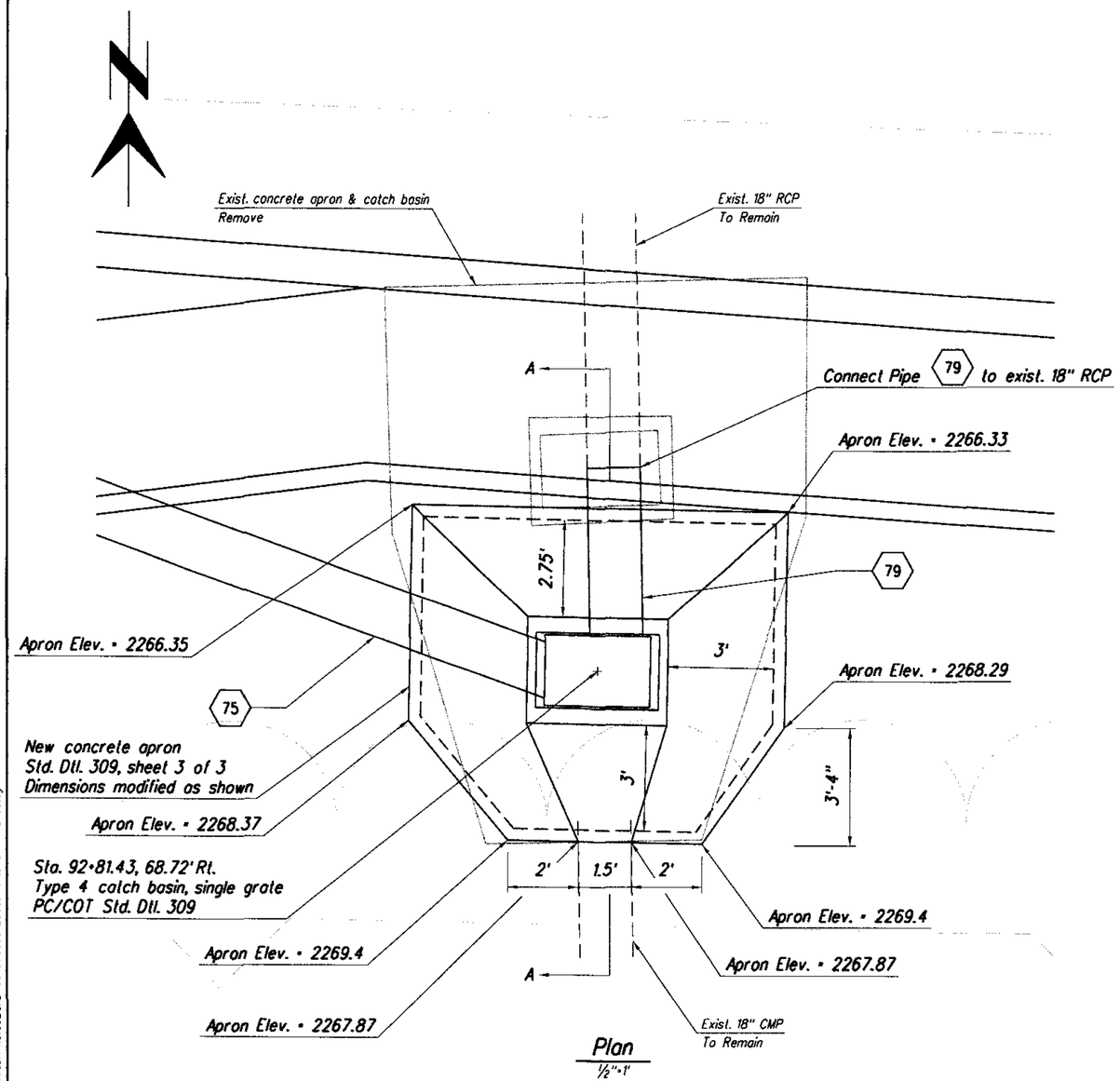

Plan
½"=1'

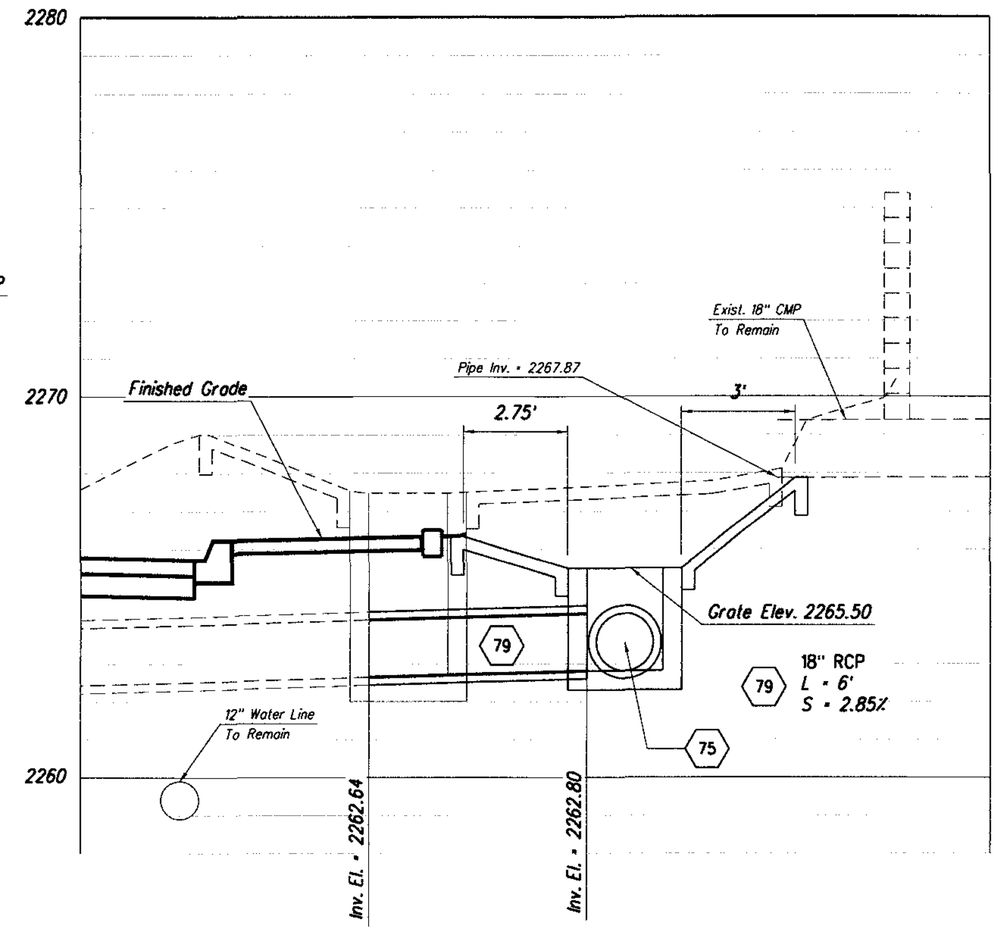

Section A-A
½"=1'

Note:
The catch basin and apron in this detail will be paid for under Item No. 5030730.

DETAIL DJ

CATCH BASIN 79

Arizona Blue Stake
1-800-STAKE-IT
1-800-782-5348
Call Two Working Days Before You Dig

Scales	Horiz. As Noted Vert. As Noted	Sheet DD9 of DD13	Page 134 of 356

Pima County Department of Transportation

Priscilla S. Cornelio, P.E., Director

No.	Revision Description	Engineer	Date

		Date
Designed	A. Ledesma	July 2009
Drawn	A. Ledesma	July 2009
Checked	R. Britton	July 2009
Proj. Engr.	R. Britton	Aug 2009

Registered Professional Engineer (Civil)
CERTIFICATE NO. 13752
ROBERT DEAN BRITTAIN
Date Signed 8-27-09
ARIZONA, U.S.A.
Expires 03-31-2011

HDR Engineering, Inc.
5210 East Williams Circle, Suite 530
Tucson, AZ 85711-4459
(520) 584-3600

LA CHOLLA BLVD.
RUTHRAUFF RD. TO RIVER RD.
STORM DRAIN DETAILS

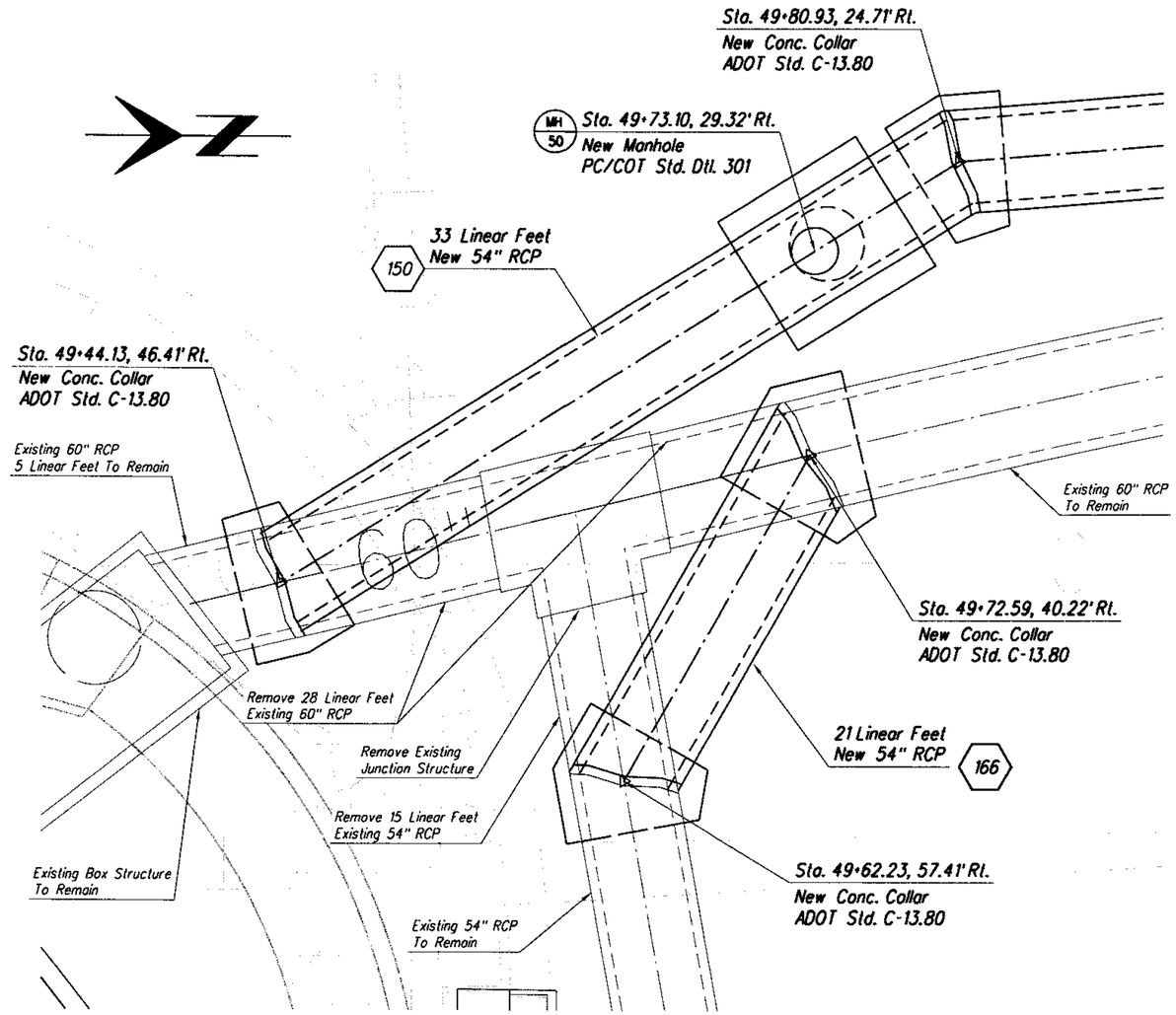

DETAIL DK

STORM DRAINS 150 & 166

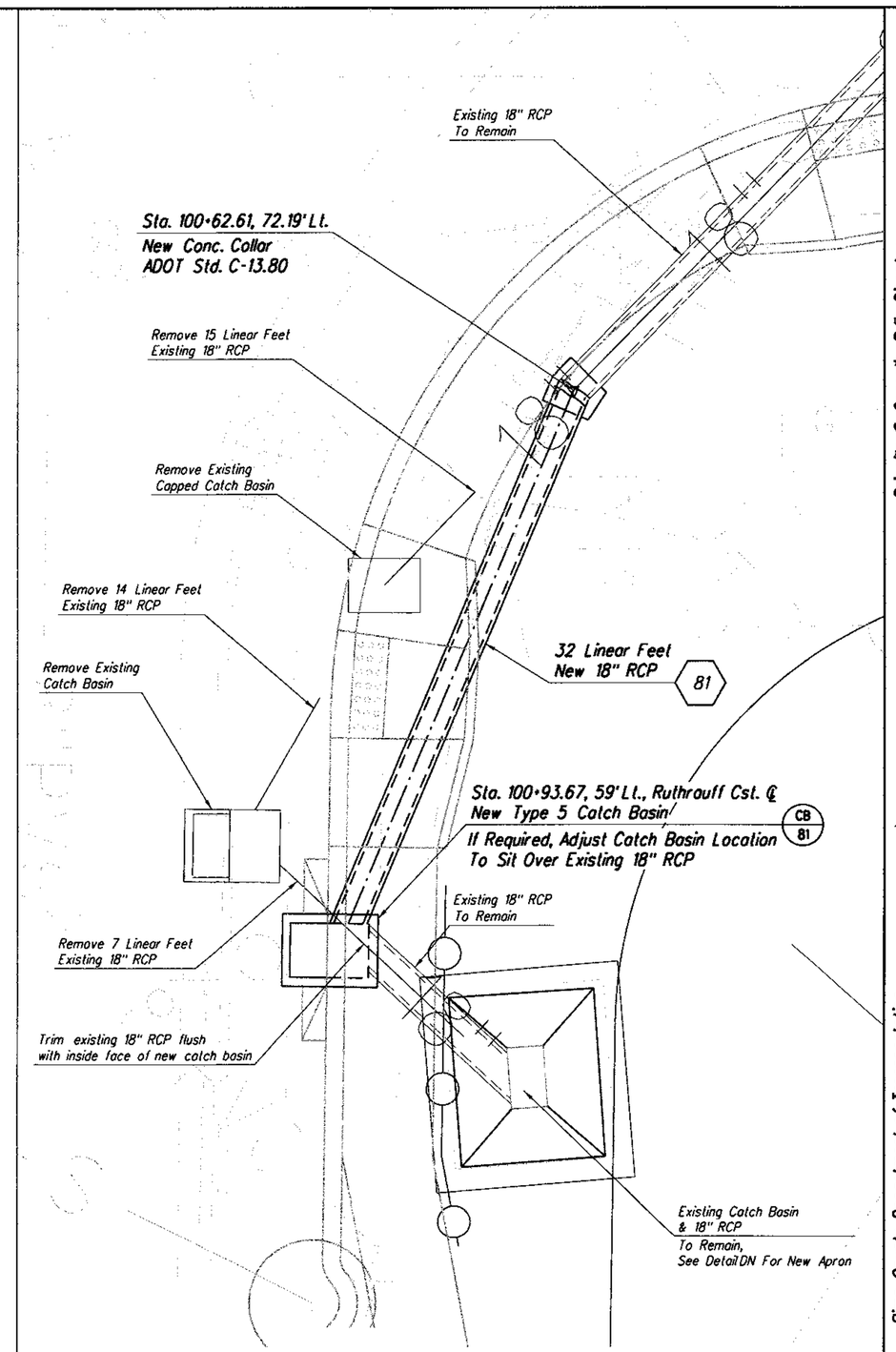

DETAIL DL

CATCH BASIN 81

Arizona Blue Stake
1-800-STAKE-IT
1-800-782-5348
Call Two Working Days Before You Dig

Scales	Horiz. 1"=4' Vert. 1"=4'	Sheet DD10 of DD13	Page 135 of 356

Pima County Department of Transportation

Priscilla S. Cornelio, P.E., Director

No.	Revision Description	Engineer	Date

		Date
Designed	A. Ledesma	July 2009
Drawn	A. Ledesma	July 2009
Checked	R. Britain	July 2009
Proj. Engr.	R. Britain	Aug. 2009

Registered Professional Engineer (Civil) Certificate No. 13762 ROBERT DEAN BRITAIN Date Signed 8-24-09 ARIZONA, U.S.A.
Expires 03-31-2011

HDR Engineering, Inc.
5210 East Williams Circle, Suite 530
Tucson, AZ 85711-4459
(520) 584-3600

LA CHOLLA BLVD.
RUTHRAUFF RD. TO RIVER RD.
STORM DRAIN DETAILS

012145
00000000005994
Pima_County_Dept_of_Transportation\PCDOT-La_Cholla_Blvd-Ruthrauff\13.00_CAD\Construction_Documents\Civil\170-10.dgn
08\20\09 4:55:23 PM dledesma
Project • 4LCITR

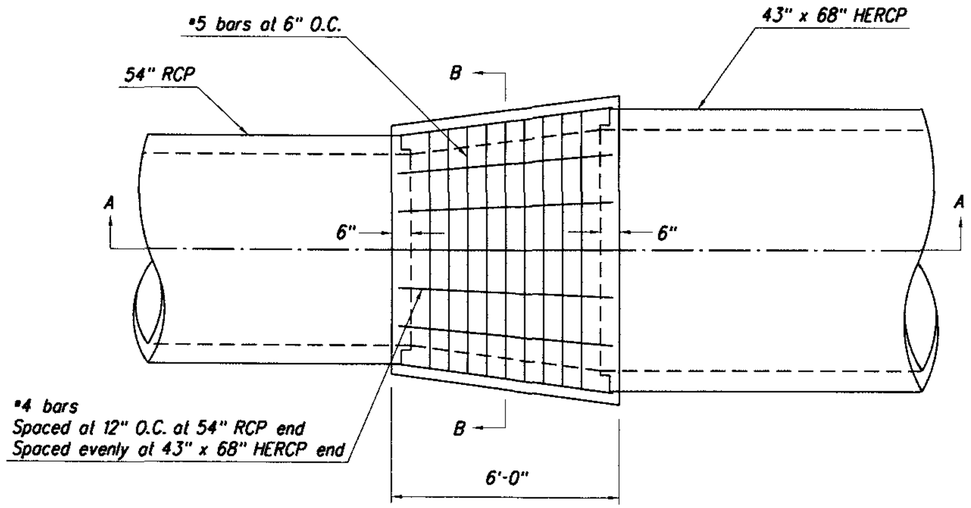

Plan
1/2"=1'

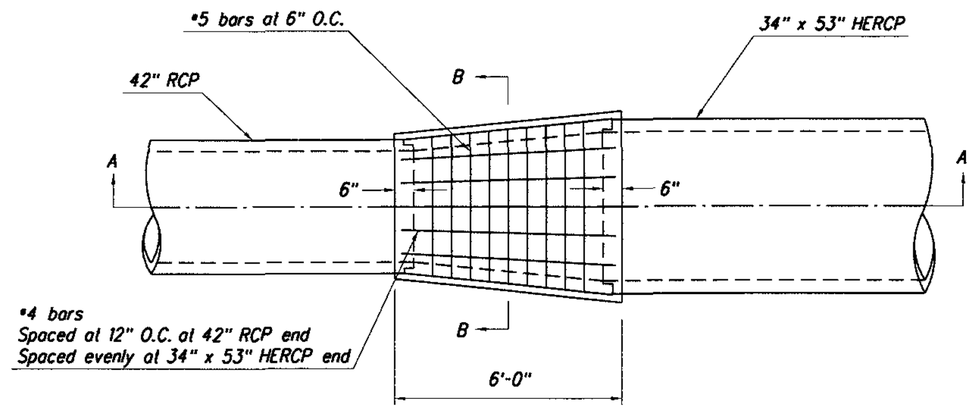

Plan
1/2"=1'

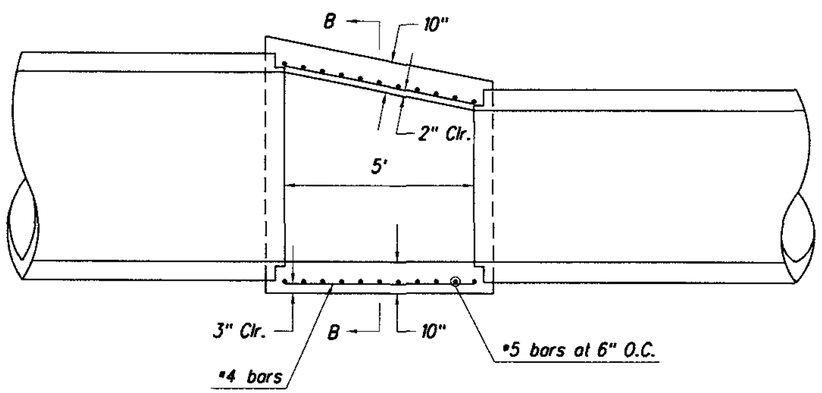

Section A-A
1/2"=1'

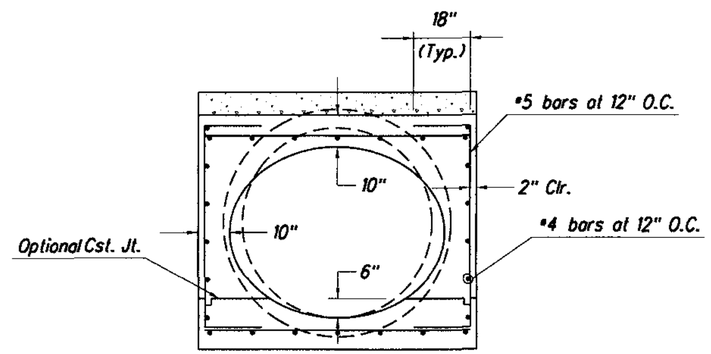

Section B-B
1/2"=1'

Notes:
1. The interior surface shall be smooth and vary uniformly between the two pipes.
2. The concrete shall be Class S, f'c=3000 psi.
3. The reinforcing steel shall be grade 40 or 60.
4. All reinforcing steel shall have 2" clear cover unless noted otherwise.
5. The transition structures will be paid for under Item No. 5011499

DETAIL DM

TRANSITION STRUCTURE

Arizona Blue Stake
1-800-STAKE-IT
1-800-782-5348
Call Two Working Days Before You Dig

Scales	Horiz. As Noted / Vert. As Noted	Sheet	DD11 of DD13	Page	136 of 356

Pima County Department of Transportation

Priscilla S. Cornelio, P.E., Director

No.	Revision Description	Engineer	Date

		Date
Designed	A. Ledesma	July 2009
Drawn	A. Ledesma	July 2009
Checked	R. Brittain	July 2009
Proj. Engr.	R. Brittain	Aug 2009

Registered Professional Engineer
CERTIFICATE NO. 13762
ROBERT DEAN BRITTAIN
DATE SIGNED 8-25-09
ARIZONA, U.S.A.
Expires 03-31-2011

HDR Engineering, Inc.
5210 East Williams Circle, Suite 530
Tucson, AZ 85711-4459
(520) 584-3600

LA CHOLLA BLVD.
RUTHRAUFF RD. TO RIVER RD.
STORM DRAIN DETAILS

012145
G0000000000059914
Pima_County_Dept_of_Transportation\PCDOT-La_Cholla_Blvd-Ruthrauff\13.00_CAD\Construction_Documents\Civil\17D-11.dgn

08\20\09 4:55:27 PM aledesma

Project • 4LCITR

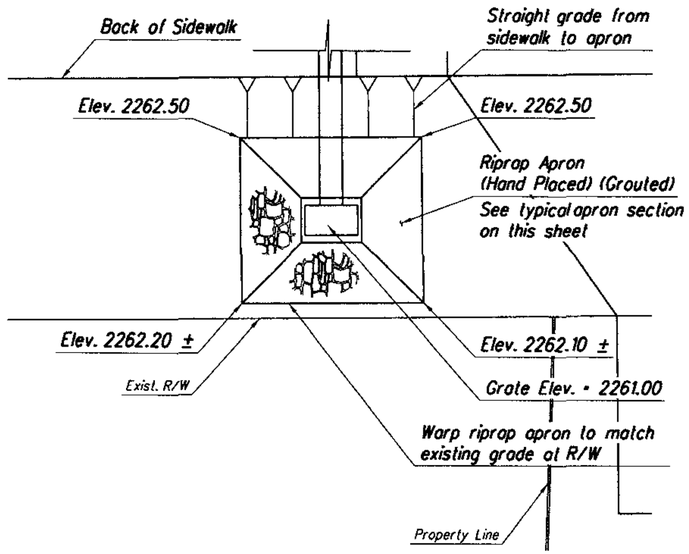

CB57a Grading Plan
1"=5'

Note:
The riprap apron will be paid for under Item No. 9130009.

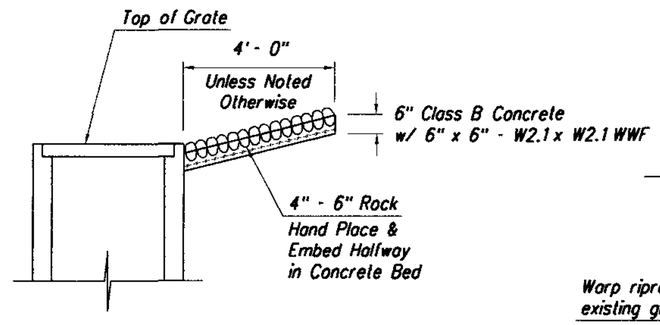

TYPICAL APRON SECTION
1"=5'

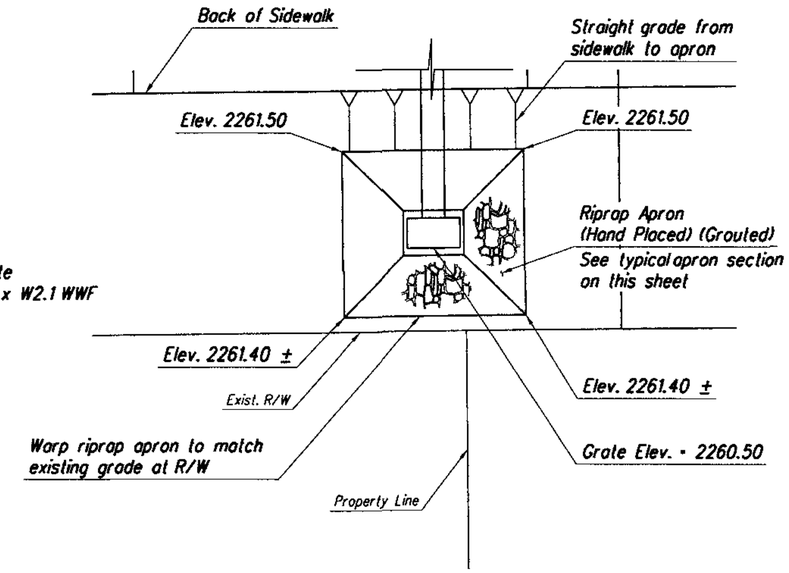

CB57c Grading Plan
1"=5'

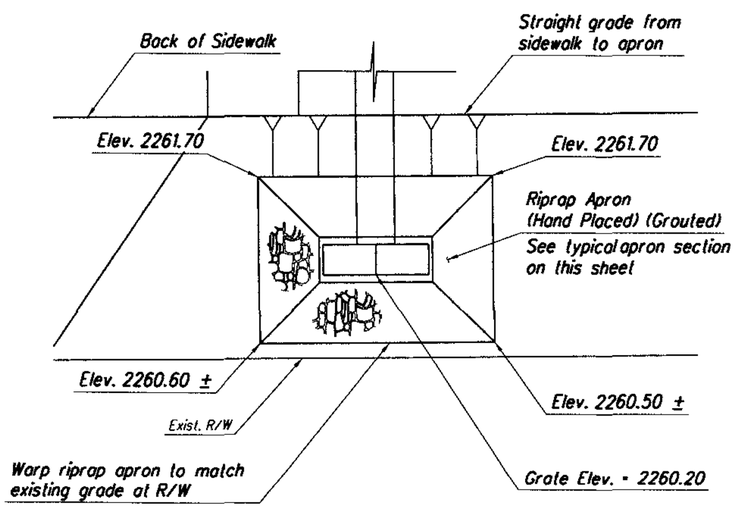

CB57b Grading Plan
1"=5'

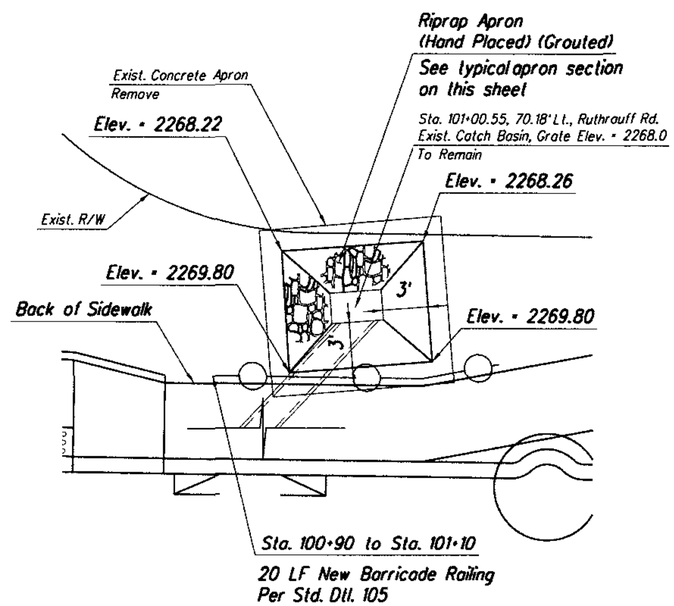

Existing Catch Basin Grading Plan
1"=5'

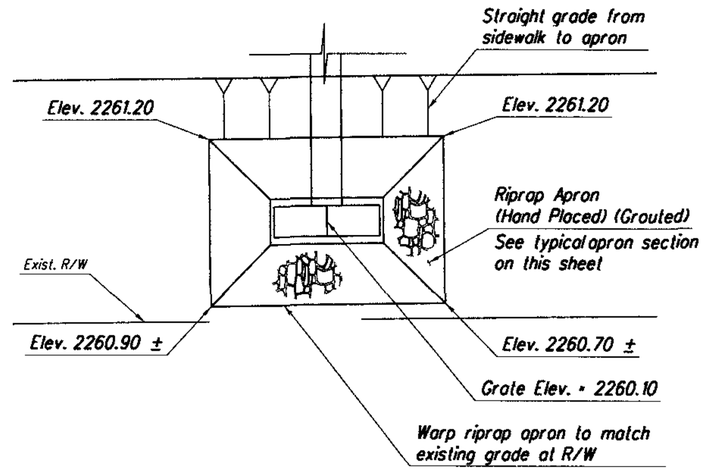

CB58a Grading Plan
1"=5'

DETAIL DN

CATCH BASIN GRADING PLAN

Arizona Blue Stake
1-800-STAKE-IT
1-800-782-5348
Call Two Working Days Before You Dig

Scales	Horiz. As Noted Vert. As Noted	Sheet DD12 of DD13	Page 137 of 356

Pima County Department of Transportation

Priscilla S. Cornelio, P.E., Director

No.	Revision Description	Engineer	Date

		Date
Designed	A. Ledesma	July 2009
Drawn	A. Ledesma	July 2009
Checked	R. Brittain	July 2009
Proj. Engr.	R. Brittain	Aug 2009

Registered Professional Engineer (Civil) CERTIFICATE NO. 13782 ROBERT DEAN BRITTAIN Date Signed 8-24-09 ARIZONA, U.S.A.
Expires 03-31-2011

HDR Engineering, Inc.
5210 East Williams Circle, Suite 530
Tucson, AZ 85711-4459
(520) 584-3600

LA CHOLLA BLVD.
RUTHRAUFF RD. TO RIVER RD.
STORM DRAIN DETAILS

012145
00000000000059914
Pima_County_Dept_of_Transportation\PCDOT-La_Cholla_Blvd-Ruthrauff\13.00_CAD\Construction_Documents\Civil\17D-12.dgn

08\20\09 4:55:30 PM aledesma

Project • 4LCITR

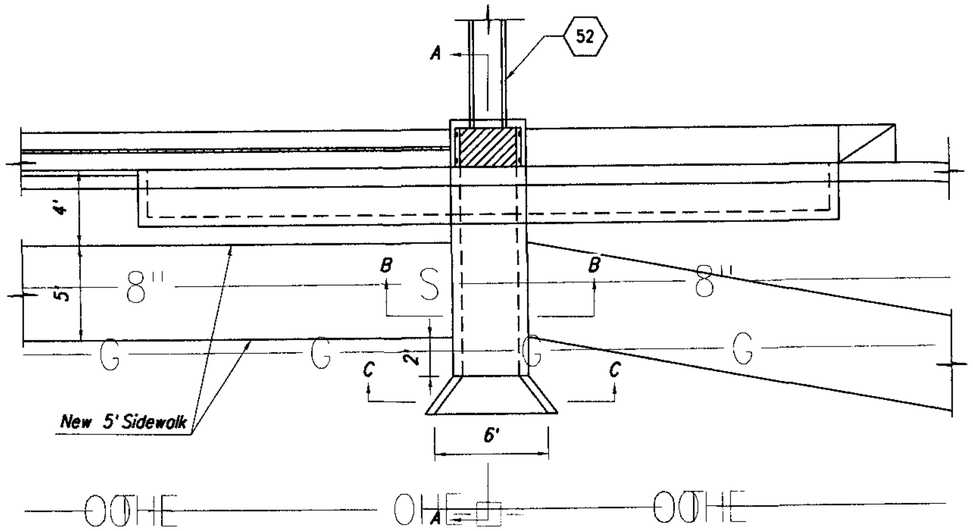

Plan
1/4"=1'

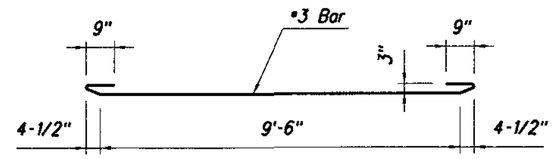

"B" Bar Detail
1/2"=1'

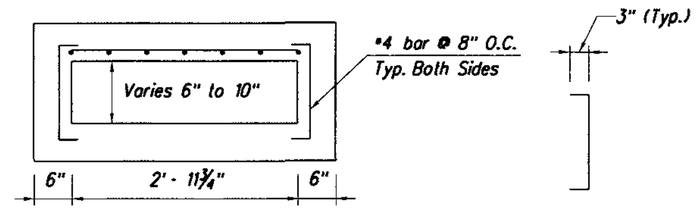

Section B - B
1"=1'

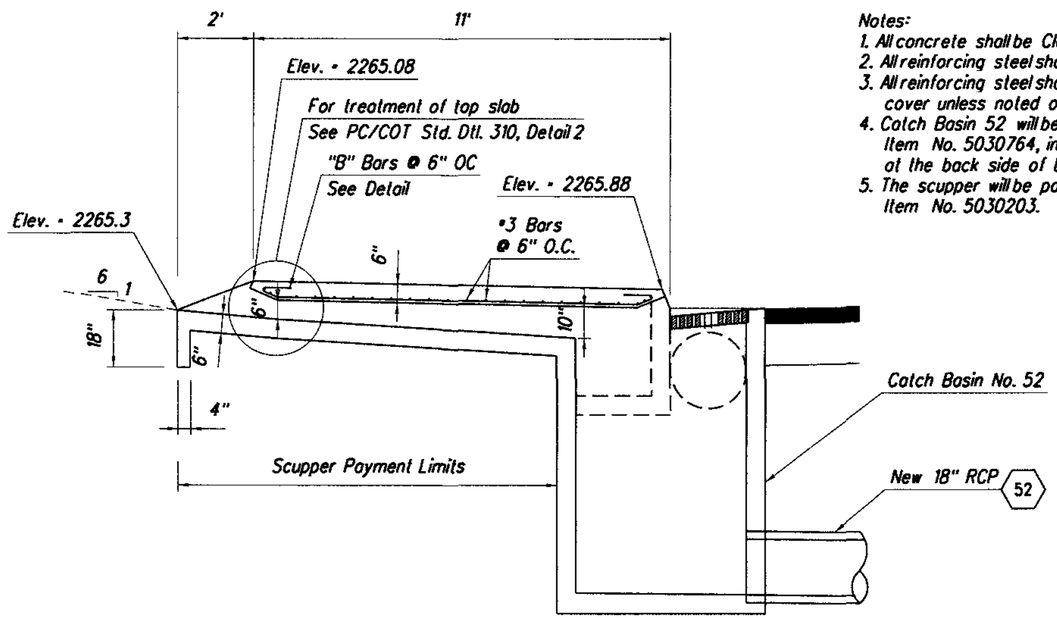

Section A - A
1/2"=1'

Notes:
1. All concrete shall be Class B.
2. All reinforcing steel shall be Grade 40 or 60.
3. All reinforcing steel shall have 2 inches clear cover unless noted otherwise.
4. Catch Basin 52 will be paid for under Item No. 5030764, including the opening at the back side of the sump.
5. The scupper will be paid for under Item No. 5030203.

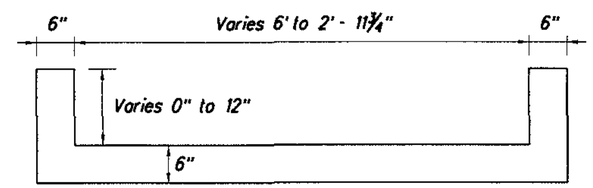

Section C - C
1"=1'

DETAIL DO

SCUPPER FOR
CATCH BASIN 52

Arizona Blue Stake
1-800-STAKE-IT
1-800-782-5348
Call Two Working Days before YOU Dig

Scales	Horiz. As Noted Vert. As Noted	Sheet DD13 of DD13	Page 138 of 356

Pima County Department of Transportation

Priscilla S. Cornelio, P.E., Director

No.	Revision Description	Engineer	Date

		Date
Designed	A. Ledesma	July/2009
Drawn	A. Ledesma	July/2009
Checked	R. Brittain	July/2009
Proj. Engr.	R. Brittain	Aug/2009

Registered Professional Engineer (Civil)
CERTIFICATE NO. 13762
ROBERT DEAN BRITTAIN
Date Signed 8-24-09
ARIZONA, U.S.A.
Expires 03-31-2011

HDR Engineering, Inc.
5210 East Williams Circle, Suite 530
Tucson, AZ 85711-4459
(520) 584-3600

LA CHOLLA BLVD.
RUTHRAUFF RD. TO RIVER RD.
STORM DRAIN DETAILS

012145
00000000005994
Pima_County_Dept_of_Transportation\PCDOT-La_Cholla_Blvd-Ruthrauff\13.00_CAD\Construction_Documents\Civil\170-13.dgn

08\20\09 4:55:34 PM aledesma

Project # 4LCITR

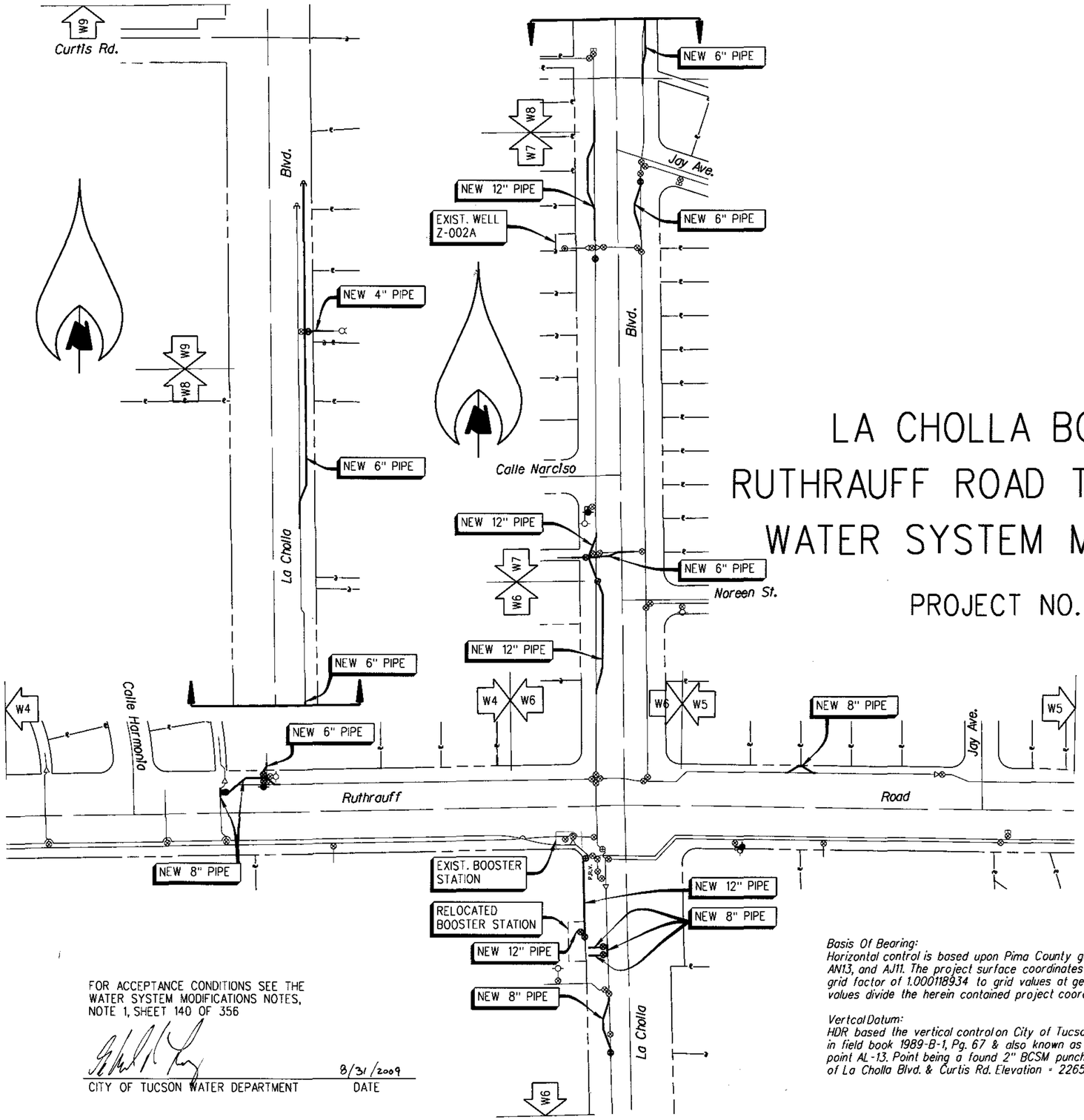

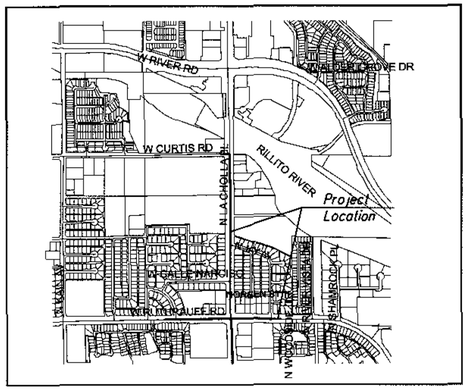

LOCATION MAP

Sections 15,16,21 & 22 T13S,R13E
G.&S.R.B.&M. Pima County, AZ.
City Of Tucson
Latitude32°18'N Longitude 111°01'W
N.T.S.

LA CHOLLA BOULEVARD
RUTHRAUFF ROAD TO RIVER ROAD
WATER SYSTEM MODIFICATIONS

PROJECT NO. 4LCITR

PAGE	SHEET	DESCRIPTION
139	W1	COVER SHEET
140	W2	NOTES & LEGEND
141	W3	MATERIAL SUMMARY
142-147	W4-W9	PLAN & PROFILE
148&149	W10&W11	DETAILS
150	W12	SEWER PLAN (FOR INFORMATIONAL PURPOSES)

FOR ACCEPTANCE CONDITIONS SEE THE WATER SYSTEM MODIFICATIONS NOTES, NOTE 1, SHEET 140 OF 356

CITY OF TUCSON WATER DEPARTMENT — DATE 8/31/2009

Basis Of Bearing:
Horizontal control is based upon Pima County geodetic control points AL13, AN13, and AJ11. The project surface coordinates were established by applying a combined grid factor of 1.000118934 to grid values at geodetic control point AL13. To achieve grid values divide the herein contained project coordinates by the combined grid factor.

Vertical Datum:
HDR based the vertical control on City of Tucson bench mark documented in field book 1989-B-1, Pg. 67 & also known as Pima County geodetic control point AL-13. Point being a found 2" BCSM punch only located at the intersection of La Cholla Blvd. & Curtis Rd. Elevation = 2265.62' (NAVD 88)

Arizona Blue Stake
1-800-STAKE-IT
1-800-782-5348
Call Two Working Days Before You Dig

No.	Revision Description	Engineer	Date

Priscilla S. Cornelio, P.E., Director

		Date
Designed	T. Celaya	July/2009
Drawn	T. Celaya	July/2009
Checked	R. Britton	July/2009
Proj. Engr.	R. Britton	Aug/2009

Registered Professional Engineer (Civil) CERTIFICATE NO. 13782 ROBERT DEAN BRITTAIN Date Signed 8-28-09 Arizona, U.S.A.
Expires 03-31-2011

HDR Engineering, Inc.
5210 East Williams Circle, Suite 530
Tucson, AZ 85711-4459
(520) 584-3600

Pima County Department of Transportation

WATER SYSTEM MODIFICATIONS
LA CHOLLA BLVD.
RUTHRAUFF RD. TO RIVER RD.

Scales	Horiz. 1"=100' Vert. NA	Sheet	W1 of W12	Page	139 of 356

012145
0000000000059914
Pima_County_Dept._of_Transportation\PCDOT-La_Cholla_Blvd-Ruthrauff\13.00_CAD\Construction_Documents\Civil\23C-00.dgn

08\20\09 4:55:38 PM aledesmo

Project • 4LCITR

WATER SYSTEM MODIFICATION NOTES

1. ACCEPTANCE CONDITIONS:
   A. THIS PROJECT IS ACCEPTED BY THE CITY OF TUCSON WATER DEPARTMENT FOR SUBSTANTIAL CONCURRENCE WITH STANDARD SPECIFICATIONS AND DETAILS.
   B. ACCEPTANCE OF THESE PLANS IS VALID FOR 3 YEARS AFTER THE DATE OF THE SIGNATURE.
   C. THE WARRANTEE AND GUARANTEE DURATION FOR ALL WATER WORK ON THIS PROJECT SHALL BE TWO (2) YEARS COMMENCING ON THE DATE OF FINAL ACCEPTANCE OF THE WATER WORK BY THE CITY OF TUCSON WATER DEPARTMENT.
2. CURRENT STANDARDS:
   ALL WATER SYSTEM MODIFICATION CONSTRUCTION WORK SHALL CONFORM TO THE FOLLOWING STANDARDS AND SPECIAL PROVISIONS:
   A. THE PIMA COUNTY \CITY OF TUCSON STANDARD SPECIFICATIONS FOR PUBLIC IMPROVEMENTS, 2003 EDITION.
   B. THE WATER SYSTEM MODIFICATIONS SPECIAL PROVISIONS FOR THIS PROJECT.
3. WATER SYSTEM MODIFICATION PRECONSTRUCTION PROCEDURE:
   A. THE CONTRACTOR SHALL CONTACT THE CITY OF TUCSON WATER DEPARTMENT, CONSTRUCTION SECTION (791-2665), A MINIMUM OF THREE (3) CALENDAR DAYS PRIOR TO ANY WATER WORK. THE CONTRACTOR SHALL REFER TO THE CITY OF TUCSON WATER DEPARTMENT PLAN NO. 5-056-2009
   B. THE CITY OF TUCSON WATER DEPARTMENT CONSTRUCTION SECTION WILL SCHEDULE THE TIME AND PLACE FOR THE MEETING.
   C. NO WATER SYSTEM CONSTRUCTION SHALL BEGIN UNTIL A "NOTICE TO PROCEED" HAS BEEN ISSUED BY THE CITY OF TUCSON WATER DEPARTMENT.
   D. ANY WATER WORK INSTALLED PRIOR TO THE NOTICE TO PROCEED DATE SHALL BE REMOVED BY THE CONTRACTOR AT THE CONTRACTOR'S EXPENSE.
4. SHUT DOWN OF TRANSMISSION MAINS:
   A. CONSTRUCTION ON THE 16" & 12" INCH (CONNECTED TO WELL Z-002A) MAINS SHALL TAKE PLACE ONLY IN THE OFF PEAK SEASON BETWEEN OCTOBER 1 AND MARCH 30.
   B. THE CONTRACTOR SHALL BE ALLOWED A MAXIMUM OF FIVE (5) CALENDAR DAYS DOWN TIME FOR ANY ONE SHUT-DOWN.
   C. MULTIPLE SHUT-DOWNS WILL BE ALLOWED WITH A MINIMUM OF SEVEN (7) CALENDAR DAYS BETWEEN SHUT-DOWNS.
5. DIMENSIONS SLOPES AND GRADES:
   ALL DIMENSIONS, SLOPES AND GRADES OF EXISTING WATER LINES ARE TAKEN FROM "AS BUILT" DRAWINGS. IT SHALL BE THE CONTRACTOR'S RESPONSIBILITY TO DETERMINE EXACT INFORMATION BEFORE ORDERING ANY SPECIAL FITTINGS OR EQUIPMENT.
6. SHUT DOWN OF DISTRIBUTION MAINS:
   SHUT-DOWN OF THE EXISTING WATER SYSTEM REQUIRING THE OPERATION OF TUCSON WATER VALVES SHALL BE COORDINATED THROUGH A CITY OF TUCSON WATER DEPARTMENT CONSTRUCTION INSPECTOR.
7. DEPTH OF NEW WATER MAINS:
   A. NEW WATER MAINS SHALL BE INSTALLED AT A MINIMUM DEPTH OF THREE FEET (3.0') FROM THE BOTTOM OF ANY EXCAVATION OR SCARIFICATION TO THE TOP OF THE NEW PIPE. THIS DEPTH SHALL BE MAINTAINED FOR FIVE FEET (5.0') BEYOND ANY EXCAVATION, MEASURED PERPENDICULAR TO THE PROPOSED STRUCTURE OR EDGE OF THE PROPOSED ROADWAY.
   B. IN NO CASE SHALL NEW WATER MAINS BE INSTALLED LESS THAN THREE AND SIXTY SEVEN HUNDREDTHS OF A FOOT (3.67') DEEP FROM THE FINISHED GRADE TO THE TOP OF THE NEW PIPE.
   C. THESE MINIMUMS SHALL APPLY TO ALL WATER MAINS UNLESS OTHERWISE NOTED ON THE PLANS.
8. DEPTH OF NEW SERVICE LINES:
   A. NEW SERVICE LINES, TWO INCH (2") AND SMALLER, SHALL BE INSTALLED AT A MINIMUM DEPTH OF TWO FEET (2.0') FROM THE BOTTOM OF ANY EXCAVATION OR SCARIFICATION TO THE TOP OF THE NEW SERVICE LINE. THIS DEPTH SHALL BE MAINTAINED FOR FIVE FEET (5.0') BEYOND ANY EXCAVATION, MEASURED PERPENDICULAR TO THE PROPOSED STRUCTURE OR EDGE OF THE PROPOSED ROADWAY.
   B. IN NO CASE SHALL NEW SERVICE LINES BE INSTALLED LESS THAN THREE FEET (3.0') DEEP FROM THE FINISHED GRADE TO THE TOP OF THE NEW SERVICE LINE.
   C. THESE MINIMUMS SHALL APPLY TO ALL SERVICE LINES UNLESS OTHERWISE NOTED ON THE PLANS.
9. WATER METERS AND METER BOXES:
   THE CONTRACTOR SHALL BE RESPONSIBLE FOR ALL WATER METERS AND METER BOXES IN THE CONSTRUCTION AREA. THIS WILL INCLUDE BUT NOT BE LIMITED TO:
   A. REMOVAL AND INSTALLATION:
      DURING THIS OPERATION METERS SHALL BE TAGGED WITH THE CORRECT ADDRESS TO ENSURE THEIR REINSTALLATION AT THE SAME LOCATION.
   B. PROTECTION OF METERS:
      AT ALL TIMES THE CONTRACTOR SHALL TAKE PRECAUTIONS TO AVOID ANY DAMAGE TO THE METERS. THE CONTRACTOR SHALL PROVIDE FOR THEIR SAFE STORAGE AND THE PROPER EQUIPMENT FOR THEIR HANDLING.
   C. ACCESS TO METERS:
      THE CONTRACTOR SHALL MAINTAIN ACCESS TO ALL IN SERVICE METERS DURING CONSTRUCTION. AT THE CLOSE OF THE PROJECT THE CONTRACTOR SHALL ENSURE THAT ALL METERS ARE LEFT ACCESSIBLE AND THAT ALL METER BOXES ARE ADJUSTED TO FINAL GRADE.
10. FIRE PROTECTION SHUT DOWN:
   FORTY-EIGHT (48) HOURS PRIOR TO SHUT-DOWN OF ANY FIRE HYDRANTS OR FIRE PROTECTION SERVICE LINES THE CONTRACTOR SHALL PROVIDE THE CITY OF TUCSON WATER DEPARTMENT CONSTRUCTION INSPECTOR WITH A WRITTEN REPORT INDICATING THE LOCATION AND DURATION OF ANY FIRE HYDRANT OR FIRE PROTECTION SERVICE SHUT-DOWNS.
   THE CONTRACTOR SHALL NOTIFY THE CITY OF TUCSON WATER DEPARTMENT CONSTRUCTION INSPECTOR WHEN FIRE HYDRANTS OR FIRE PROTECTION SERVICES ARE BACK IN SERVICE.
11. MAINTAIN SERVICE TO CUSTOMERS:
   THE CONTRACTOR SHALL BE RESPONSIBLE FOR MAINTAINING SERVICE TO ALL WATER CUSTOMERS DURING CONSTRUCTION.
   IT SHALL BE THE CONTRACTOR'S RESPONSIBILITY TO DETERMINE WHICH SERVICES WILL BE EFFECTED BY THIS PROJECT.
   IT MAY BE NECESSARY TO ACCOMPLISH TIE-OVERS, RE-CONNECTIONS, ETC.. WHILE BUSINESS CUSTOMERS ARE CLOSED.
   IF INTERRUPTION OF SERVICE IS UNAVOIDABLE THE CONTRACTOR SHALL NOTIFY THE WATER INSPECTOR A MINIMUM OF 48 HOURS IN ADVANCE TO COORDINATE SHUT-DOWNS. EVERY EFFORT SHALL BE MADE TO MINIMIZE DISRUPTION TO THE CUSTOMER.
   IF THE CONTRACTOR CHOOSES TO ABANDON ANY PORTION OF THE EXISTING WATER SUPPLY SYSTEM WITHOUT CONCURRENT NEW CONSTRUCTION AS CALLED FOR ON THE PLANS, THE CONTRACTOR SHALL PROVIDE ANY AND ALL MATERIALS AND CONSTRUCTION OF A TEMPORARY OR PERMANENT WATER SYSTEM TO MAINTAIN CONTINUED WATER SERVICE TO CUSTOMERS AT NO ADDITIONAL COST.
12. SPECIAL USE WATER PERMITS:
   PRIOR TO COMMENCING WORK, THE CONTRACTOR SHALL APPLY FOR TWO (2) SPECIAL WATER USE PERMITS FROM THE CITY OF TUCSON WATER DEPARTMENT COMMERCIAL SECTION.
   A. CONSTRUCTION WATER SPECIAL PERMIT:
      THERE WILL BE NO CHARGE FOR THIS PERMIT, BUT THE CONTRACTOR MUST PAY THE SUM OF $ 76.92 PLUS TAX AS THE ESTIMATED COST OF THE WATER TO BE USED. THIS WATER MAY ONLY BE USED FOR TRENCH SETTLING, DISINFECTION AND TESTING.
   B. METERED FIRE HYDRANT ONLY PERMIT:
      THIS NON-TRANSFERABLE PERMIT WILL ENTITLE THE CONTRACTOR TO USE WATER THROUGH A METER FROM EXISTING FIRE HYDRANTS AT APPROVED LOCATIONS. WATER USED UNDER THIS PERMIT IS FOR GENERAL CONSTRUCTION PURPOSES SUCH AS DUST CONTROL, SITE PREPARATION, ETC.
13. NEW MATERIAL:
   ALL MATERIALS, FITTINGS, AND APPURTENANCES CALLED FOR ON THE PLANS, OR REQUIRED FOR A COMPLETE INSTALLATION, SHALL BE NEW. NO REFURBISHED ITEMS OR MATERIALS WILL BE ALLOWED.
14. VALVE BOXES:
   THE CONTRACTOR SHALL BE RESPONSIBLE FOR ADJUSTING ALL NEW AND EXISTING WATER VALVE BOXES TO THE FINISHED GRADE PER STANDARD DETAIL W-300.
15. JOINT RESTRAINT:
   THE CONTRACTOR SHALL USE MECHANICALLY RESTRAINED JOINTS AT ALL CHANGES OF DIRECTION IN THE WATER MAINS. THE LENGTHS OF RESTRAINED PIPE ON BOTH SIDES OF THE RESTRAINED JOINT SHALL BE AS CALLED FOR ON THE PLANS OR AS PER STANDARD DETAIL W-600. WITH THE APPROVAL OF THE ENGINEER AND THE CITY OF TUCSON WATER DEPARTMENT, THE CONTRACTOR MAY USE CONCRETE THRUST BLOCKING IN LIEU OF MECHANICALLY RESTRAINED JOINTS. CONCRETE THRUST BLOCKING SHALL COMPLY WITH STANDARD DETAIL W-610.
16. MARKING TAPE:
   IF ANY EXISTING DETECTABLE MARKING TAPE IS DISTURBED OR DESTROYED DURING CONSTRUCTION, THE CONTRACTOR SHALL FURNISH AND INSTALL APPROPRIATE NEW TAPE. THERE SHALL BE NO ADDITIONAL CHARGE FOR THIS REINSTALLATION.
17. THE EXISTING RUTHRAUFF Z-002A ZONE BOOSTER AND PRV STATION SHALL REMAIN IN SERVICE UNTIL THE NEW REPLACEMENT STATION CONSTRUCTION IS COMPLETE, TESTED AND FULL OPERATIONAL. THE OPERATIONAL STATUS OF THE NEW STATION SHALL BE VERIFIED WITH TUCSON WATER (TW) BEFORE COMMENCING WITH THE DEMOLITION OF THE EXISTING STATION. SEE SPECIAL PROVISIONS FOR THE SCOPE OF WORK FOR DEMOLITION UNDER "ITEM 9300113 MISCELLANEOUS WORK 3".
18. TRACER WIRE:
   THIS PROJECT WILL HAVE TRACER WIRE INSTALLED. IF ANY EXISTING TRACER WIRE IS DISTURBED OR DESTROYED DURING CONSTRUCTION, THE CONTRACTOR SHALL FURNISH AND INSTALL NEW TRACER WIRE TO REPLACE THE EXISTING. THERE SHALL BE NO ADDITIONAL CHARGE FOR THIS REINSTALLATION.
19. PVC PIPE DEFLECTION
   THE CONTRACTOR MAY NOT DEFLECT PVC PIPE AT GASKETED BELL AND SPIGOT JOINTS. THE CONTRACTOR MAY USE THE FOLLOWING METHODS TO DEFLECT PVC PIPE:
   A. STANDARD DUCTILE IRON BENDS OR FITTINGS. PVC PIPE MAY BE DEFLECTED AT BENDS OR FITTINGS PROVIDED THE DEFLECTION IS WITHIN THE MANUFACTURERS' ALLOWABLE DEFLECTION FOR THAT BEND OR FITTING.
   B. LONGITUDINAL BENDING. PVC PIPE MAY BE BENT WITHIN THE BENDING LIMITS DESCRIBED IN AWWA PUBLICATION, M23 PVC PIPE - DESIGN AND INSTALLATION MANUAL.
   C. SPECIFICALLY DESIGNED PVC PIPE INTENDED FOR JOINT DEFLECTION AT GASKETED JOINTS. THE USE OF THIS PIPE FOR JOINT DEFLECTION SHALL REQUIRE APPROVAL BY THE CITY OF TUCSON WATER DEPARTMENT AND THE PROJECT ENGINEER.
20. SHEET W12 (SANITARY SEWER PLAN) IS FOR INFORMATION PURPOSES ONLY. THE SANITARY SEWER WORK WILL BE PERFORMED BY OTHERS.

WATER SYSTEM MODIFICATION LEGEND

EXISTING	NEW	PLAN SYMBOLS
6"CA—W		WATERMAIN
		VALVE
		BUTTERFLY VALVE
		FIRE HYDRANT
		FIRE PROTECTION SERVICE
		MATERIAL CHANGE
		CUT & PLUG
		REDUCER
A	A	AIR RELEASE VALVE
		DRAIN VALVE ASSEMBLY
		END CAP
	1	WATER METER IDENTIFICATION NUMBER
		SERVICE LINE & METER BOX
	4 L	WATER METER RELOCATION, SERVICE LINE ADJUSTMENT
	4 R	WATER METER RELOCATION, SERVICE LINE RENEWAL
		SERVICE LINE TIE-OVER
		BENDS, HORIZ & VERT
	W01	SHEET NUMBER

EXISTING	NEW	PROFILE SYMBOLS
		POTABLE WATERMAIN
		POTABLE GATE VALVE

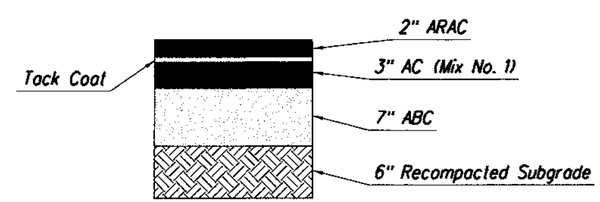

PAVEMENT STRUCTURE NO. 1

NTS

La Cholla Boulevard
Ruthrauff Road

Arizona Blue Stake
1-800-STAKE-IT
1-800-782-5348
Call Two Working Days Before You Dig

Priscilla S. Cornelio, P.E., Director

No.	Revision Description	Engineer	Date

		Date
Designed	T. Cataya	July/2009
Drawn	T. Cataya	July/2009
Checked	R. Britton	July/2009
Proj. Engr.	R. Britton	Aug/2009

REGISTERED PROFESSIONAL ENGINEER (CIVIL) CERTIFICATE NO. 13792 ROBERT DEAN BRITTAN ARIZONA, U.S.A.
Expires 03-31-2011

HDR Engineering, Inc.
5210 East Williams Circle, Suite 530
Tucson, AZ 85711-4459
(520) 584-3600

Pima County Department of Transportation

WATER SYSTEM MODIFICATIONS
LA CHOLLA BLVD.
RUTHRAUFF RD. TO RIVER RD.

Scales		Sheet	W2 of W12	Page	140 of 356

012145
G000000000059914
Pima_County_Dept_of_Transportation\PCD01-La_Cholla_Blvd-Ruthrauff\13.00_CAD\Construction_Documents\Civil\23C-00a.dgn

08\20\09 4:55:43 PM aledesma

Project • 4LCITR

MATERIAL QUANTITIES SUMMARY

ITEM NUMBER	ITEM DESCRIPTION	SHEET W4		SHEET W5		SHEET W6		SHEET W7		SHEET W8		SHEET W9		TOTALS	
		EST.	AS BUILT	EST.	AS BUILT	EST.	AS BUILT	EST.	AS BUILT	EST.	AS BUILT	EST.	AS BUILT	EST.	AS BUILT
5101104	PIPE, 4" DICL (350)											14		14	
5101106	PIPE, 6" DICL (350)	7		15				152		239		330		743	
5101112	PIPE, 12" DICL (350)							124						124	
5101404	PIPE, 4" PVC, DR 14 CL (305)											46		46	
5101406	PIPE, 6" PVC, DR 14 CL (305)	33						93		175				301	
5101408	PIPE, 8" PVC, DR 14 CL (305)	121		62		193								376	
5101412	PIPE, 12" PVC, DR 14 CL (305)					377		161		39				577	
5101603	PIPE, COPPER, 3/4" W/FITTINGS					47		43						90	
5101604	PIPE, COPPER, 1" W/FITTINGS			30		220		500		50		130		930	
5101606	PIPE, COPPER, 1-1/2" W/FITTINGS	15				5								20	
5101608	PIPE, COPPER, 2" W/FITTINGS									20		25		45	
5102117	TAPPING SLEEVE & VALVE 16"X12"					1								1	
5102204	GATE VALVE, 4"											1		1	
5102206	GATE VALVE, 6"	2						2						4	
5102208	GATE VALVE, 8"	1				3								4	
5102212	GATE VALVE, 12"					2		1						3	
5102412	GATE VALVE, CUT IN, 12"							1						1	
5102603	COMBINATION AIR RELEASE VALVE (ARV), 3/4"					2		3						5	
5102802	DRAIN VALVE ASSEMBLY (DVA)											1		1	
5103101	ADJUST EXISTING VALVE BOX AND COVER	5		3		17		8		2				35	
5103205	FIRE HYDRANT	1		1				1						3	
5105010	REMOVE AND DISPOSE NON CEMENT ASBESTOS (CA) WATER PIPE 10" AND SMALLER	38		60		121		47				63		329	
5105110	REMOVE AND DISPOSE CEMENT ASBESTOS (CA) WATER PIPE 10" AND SMALLER	120						185		408		289		1002	
5105112	REMOVE AND DISPOSE CEMENT ASBESTOS (CA) WATER PIPE 12" AND LARGER					212		271		39				522	
5105310	REMOVE & DISPOSE FIRE HYDRANT	1		1				1						3	
5106004	CONNECTIONS 4"											1		1	
5106006	CONNECTIONS 6"	1		1				5		3				10	
5106008	CONNECTIONS 8"	3		2		4								9	
5106012	CONNECTIONS 12"					1		2		1				4	
5108106	TIE OVER (T), 1 1/2"					1								1	
5108114	METER RELOCATION, SERVICE LINE RENEWAL (M/R), 1"			2				10		2		3		17	
5108118	METER RELOCATION, SERVICE LINE RENEWAL (M/R), 2"											1		1	
5108134	SERVICE LINE RENEWAL (R), 1"					2								2	
5108138	SERVICE LINE RENEWAL (R), 2"									1				1	
5108156	STUBS (S), 1 1/2"	1												1	
9300113	DEMOLITION AND SALVAGE OF EXISTING PRV AND BOOSTER STATION					1								1	

Arizona Blue Stake
1-800-STAKE-IT
1-800-782-5348
Call Two Working Days Before You Dig

Pima County Department of Transportation

Priscilla S. Cornelio, P.E., Director

No.	Revision Description	Engineer	Date

		Date
Designed	T. Cetoya	July/2009
Drawn	T. Cetoya	July/2009
Checked	R. Britton	July/2009
Proj. Engr.	R. Britton	Aug/2009

Registered Professional Engineer (Civil) CERTIFICATE NO. 13762 ROBERT DEAN BRITTAIN Date Signed 8-24-09 ARIZONA, U.S.A.
Expires 03-31-2011

HDR Engineering, Inc.
5210 East Williams Circle, Suite 530
Tucson, AZ 85711-4459
(520) 584-3600

WATER SYSTEM MODIFICATIONS
LA CHOLLA BLVD.
RUTHRAUFF RD. TO RIVER RD.

Scales | Sheet W3 of W12 | Page 141 of 356

012145
0000000000059914
Pima_County_Dept_of_Transportation\PCDOT-La_Cholla_Blvd-Ruthrauff\13.00_CAD\Construction_Documents\Civil\23C-17.dgn

08\20\09 4:55:49 PM aledesma

Project • 4LCITR

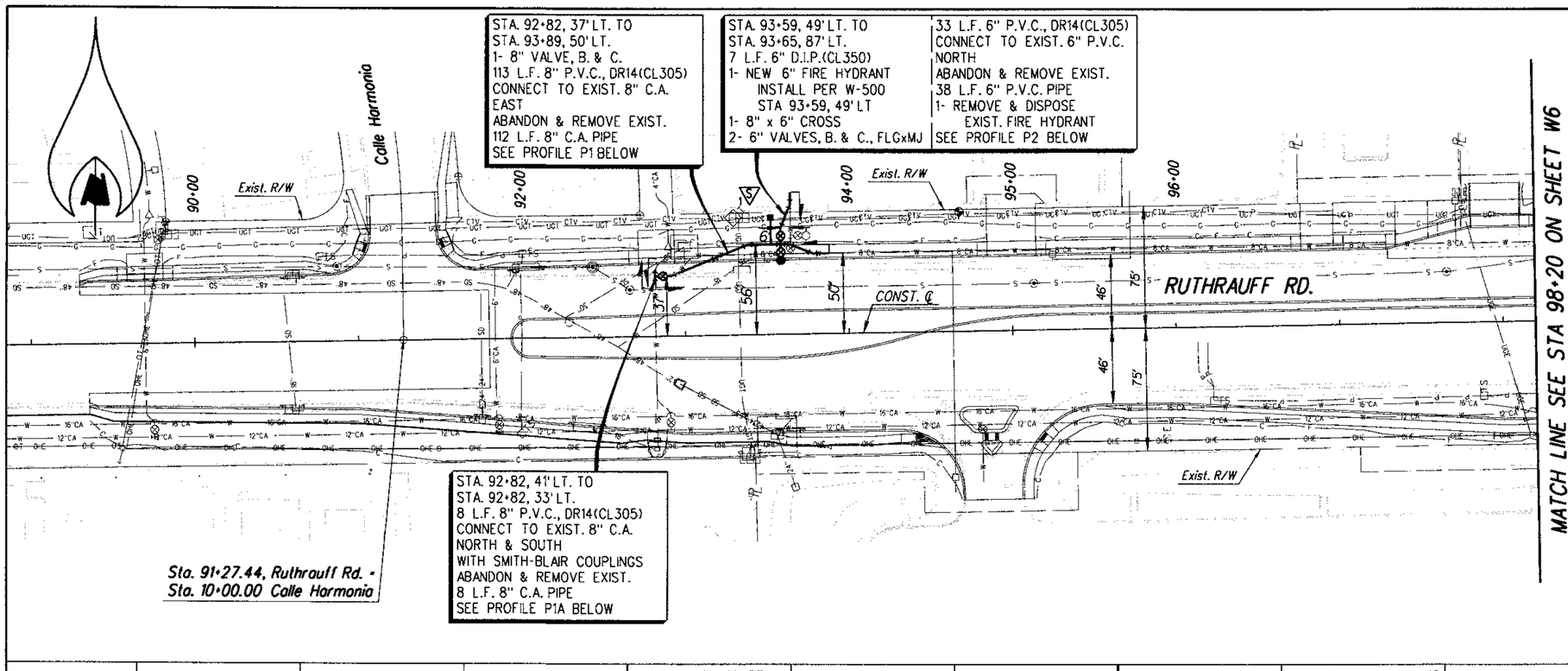

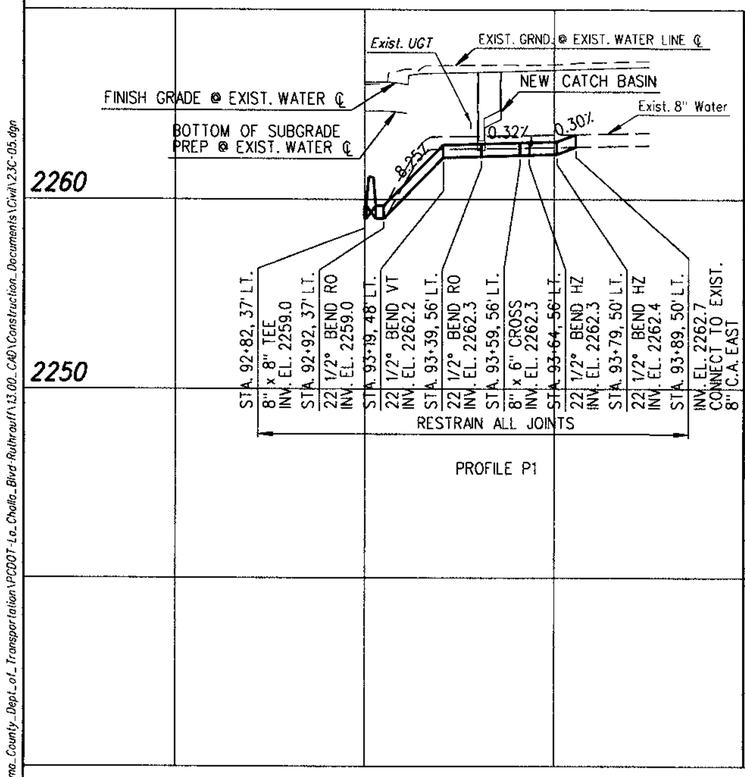

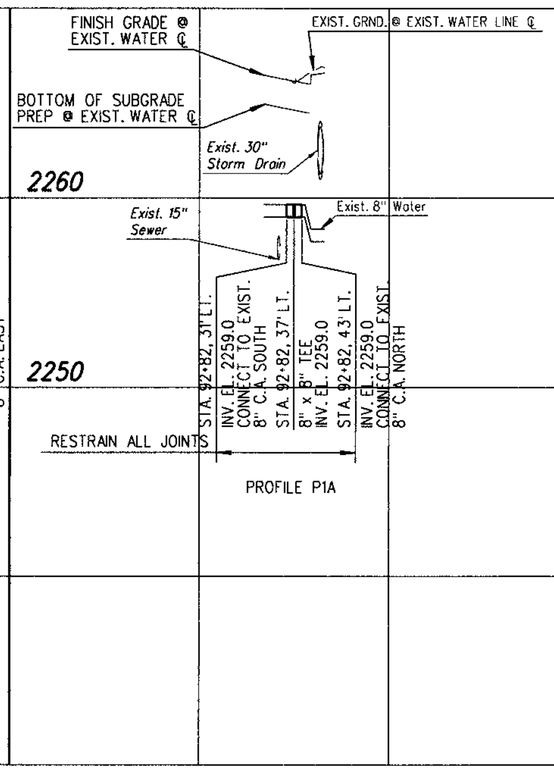

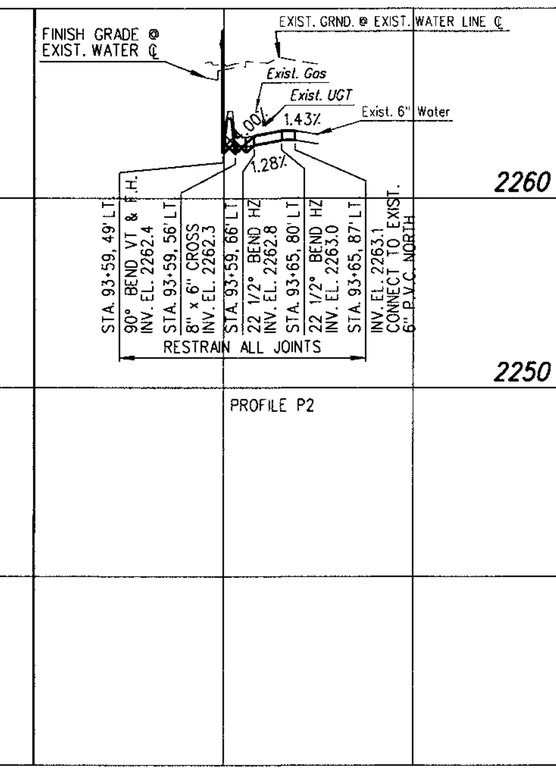

SERVICE WORK					
CODE	ADDRESS	PIPE SIZES & QUANT.(IN FEET±)			
	METER NUMBER & SIZE	3/4"	1"	1 1/2"	2"
1 S	93+53 LT. (IRRIGATION) 1 1/2"			15	
TOTAL QUANTITIES OF CU PIPE FOR SERVICE WORK ONLY				15	

Arizona Blue Stake
1-800-STAKE-IT
1-800-782-5348
Call Two Working Days Before You Dig

Priscilla S. Cornelio, P.E., Director

No.	Revision Description	Engineer	Date

			Date
Designed	T. Celaya		July/2009
Drawn	T. Celaya		July/2009
Checked	R. Britton		July/2009
Proj. Engr.	R. Britton		Aug/2009

Registered Professional Engineer (Civil) CERTIFICATE NO. 13792 ROBERT DEAN BRITTON Date Signed 8-24-09 ARIZONA, U.S.A.
Expires 03-31-2011

HDR Engineering, Inc.
5210 East Williams Circle, Suite 530
Tucson, AZ 85711-4459
(520) 584-3600

Pima County Department of Transportation

WATER SYSTEM MODIFICATIONS
LA CHOLLA BL VD.
RUTHRAUFF RD. TO RIVER RD.

Scales	Horiz. 1"=40' Vert. 1"=4'	Sheet W4 of W12	Page 142 of 356

012145
0000000000059914
Pima_County_Dept_of_Transportation\PCDOT-La_Cholla_Blvd-Ruthrauff\13.00_CAD\Construction_Documents\Civil\2JC-05.dgn

08\20\09 4:55:54 PM aledesma

Project # 4LCITR

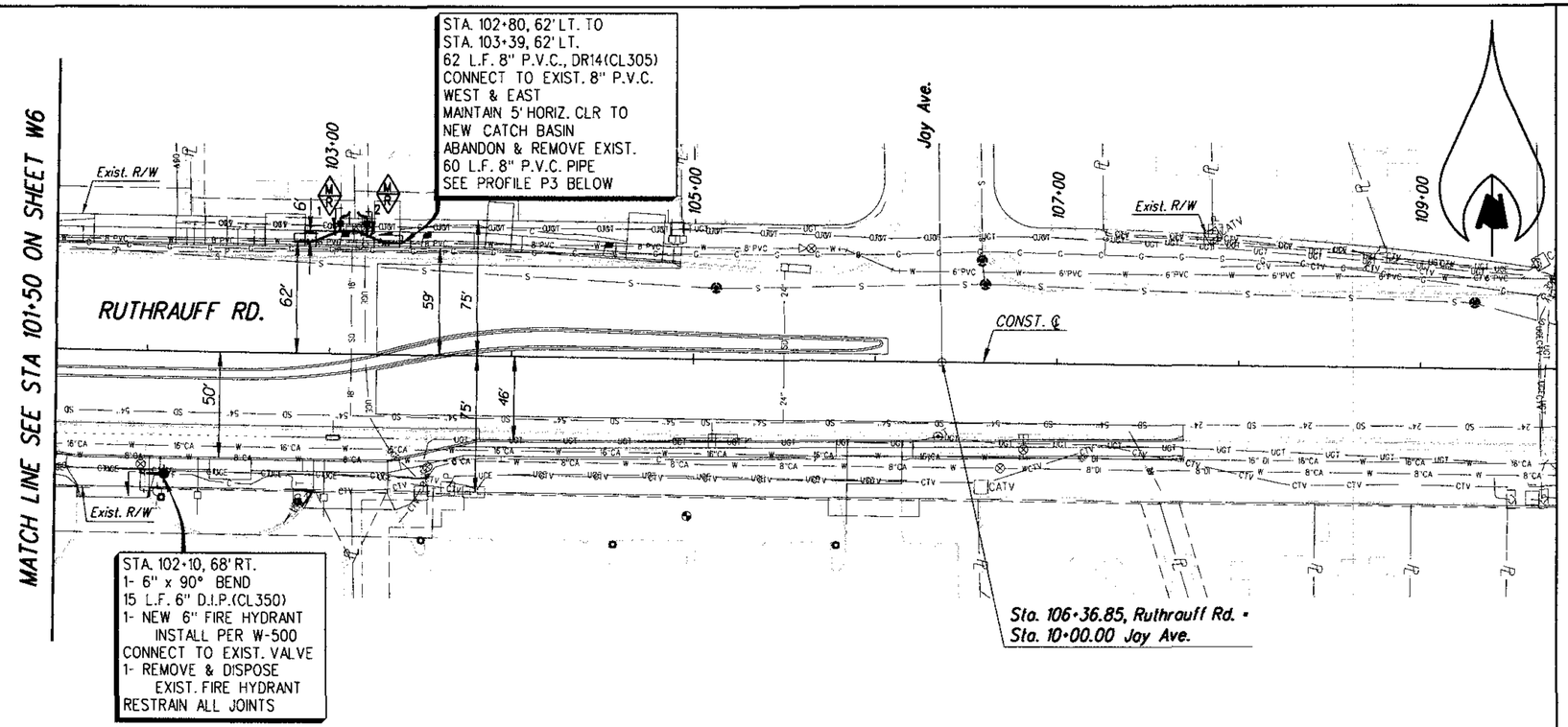

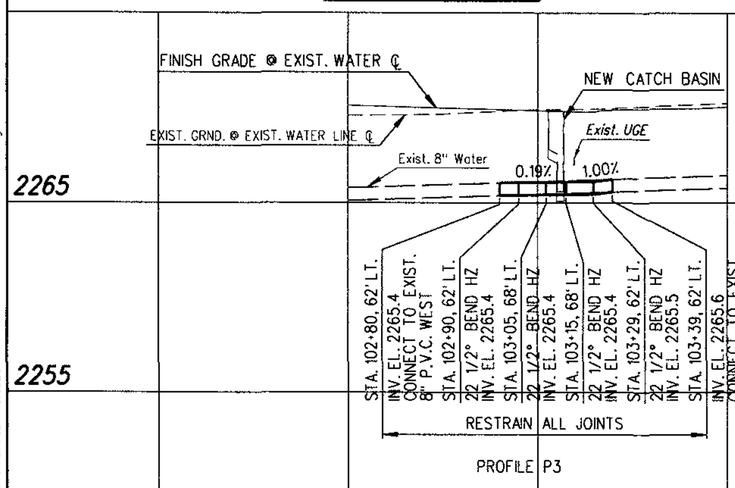

SERVICE WORK						
CODE		ADDRESS		PIPE SIZES & QUANT.(IN FEET±)			
		METER NUMBER & SIZE		3/4"	1"	1 1/2"	2"
1	M	2060 W. RUTHRAUFF RD			15		
	R	91192188	5/8"				
2	M	2040 W. RUTHRAUFF RD			15		
	R	07037582	5/8"				
TOTAL QUANTITIES OF CU PIPE FOR SERVICE WORK ONLY					30		

Arizona Blue Stake
1-800-STAKE-IT
1-800-782-5348
Call Two Working Days Before You Dig

Pima County Department of Transportation

Priscilla S. Cornelio, P.E., Director

No.	Revision Description	Engineer	Date

		Date
Designed	T. Catoya	July/2009
Drawn	T. Catoya	July/2009
Checked	R. Brittain	July/2009
Proj. Engr.	R. Brittain	Aug/2009

Registered Professional Engineer (Civil) CERTIFICATE NO. 13762 ROBERT DEAN BRITTAIN Date Signed 8-21-09 ARIZONA, U.S.A.
Expires 03-31-2011

HDR Engineering, Inc.
5210 East Williams Circle, Suite 530
Tucson, AZ 85711-4459
(520) 584-3600

WATER SYSTEM MODIFICATIONS
LA CHOLLA BLVD.
RUTHRAUFF RD. TO RIVER RD.

Scales: Horiz. 1"=40' Vert. 1"=4'

Sheet W5 of W12

Page 143 of 356

Project • 4LCITR

012145
0000000000053914
Pima_County_Dept._of_Transportation\PCDOT-La_Cholla_Blvd-Ruthrauff\13.00_CAD\Construction_Documents\Civil\23C-06.dgn

08\20\09 4:55:59 PM aledesma

STA. 47+37, 70' LT. TO
STA. 47+38, 36' LT.
1- 8" x 8" TEE
1- 8" VALVE, B. & C.
34 L.F. 8" P.V.C., DR14(CL305)
STUB TO THE WEST
SEE PROFILE P6 BELOW

STA. 47+46, 70' LT. TO
STA. 47+47, 36' LT.
1- 8" x 8" TEE
1- 8" VALVE, B. & C.
34 L.F. 8" P.V.C., DR14(CL305)
STUB TO THE WEST
SEE PROFILE P7 BELOW

STA. 47+77, 82' LT. TO
STA. 47+77, 72' LT.
1- 12" x 12" TEE
1- 12" VALVE, B. & C., FLGxMJ
10 L.F. 12" P.V.C., DR14(CL305)
STUB TO THE WEST
SEE PROFILE P8 BELOW

STA. 46+37, 36' LT.
26 L.F. ¾" CU. PIPE
STA. 46+37, 61' LT.
1-¾" ARV & VAULT
PER W-330

MATCH LINE 98+20 ON SHEET W4

SEE WATER SYSTEM MODIFICATION NOTE 17 FOR DEMOLITION OF THE EXISTING RUTHRAUFF Z-A ZONE BOOSTER AND PRV STATION

STA. 51+88, 48' LT. TO
STA. 54+00, 40' LT.
215 L.F. 12" P.V.C., DR14(CL305)
CONNECT TO EXIST. 12" C.A.
SOUTH
ABANDON & REMOVE EXIST.
212 L.F. 12" C.A. PIPE
SEE PROFILE P9 BELOW

PROPOSED BOOSTER STATION LOCATION

LA CHOLLA BLVD.

RUTHRAUFF RD.

NOREEN ST.

MATCH LINE STA 54+00

CONST. ℄

Exist. R/W

STA. 52+73, 41' LT.
21 L.F. ¾" CU. PIPE
STA. 52+73, 62' LT.
1-¾" ARV & VAULT
PER W-330

STA. 45+58, 35' LT. TO
STA. 46+64, 36' LT.
1- 8" VALVE, B. & C.
111 L.F. 8" P.V.C., DR14(CL305)
CONNECT TO EXIST.
8" P.V.C. SOUTH & NORTH
ABANDON & REMOVE EXIST.
107 L.F. 8" P.V.C. PIPE
SEE PROFILE P4 BELOW

STA. 47+35, 36' LT. TO
STA. 47+49, 36' LT.
14 L.F. 8" P.V.C., DR14(CL305)
CONNECT TO EXIST. 8" P.V.C.
SOUTH & NORTH
ABANDON & REMOVE EXIST.
14 L.F. 8" P.V.C. PIPE
SEE PROFILE P4 BELOW

STA. 47+67, 72' LT. TO
STA. 49+15, 65' LT.
1- 16" x 12" T.S. & VALVE
1- 12" VALVE, B. & C., FLGxMJ
152 L.F. 12" P.V.C., DR14(CL305)
CONNECT TO EXIST.
16" C.A. NORTH
SEE PROFILE P5 BELOW

MATCH LINE 101+50 ON SHEET W5

Sta. 50+00.00 La Cholla Blvd. =
Sta. 100+00.00 Ruthrauff Rd.

Sta 53+64.41 La Cholla Blvd. =
Sta 10+00.00 Noreen St.

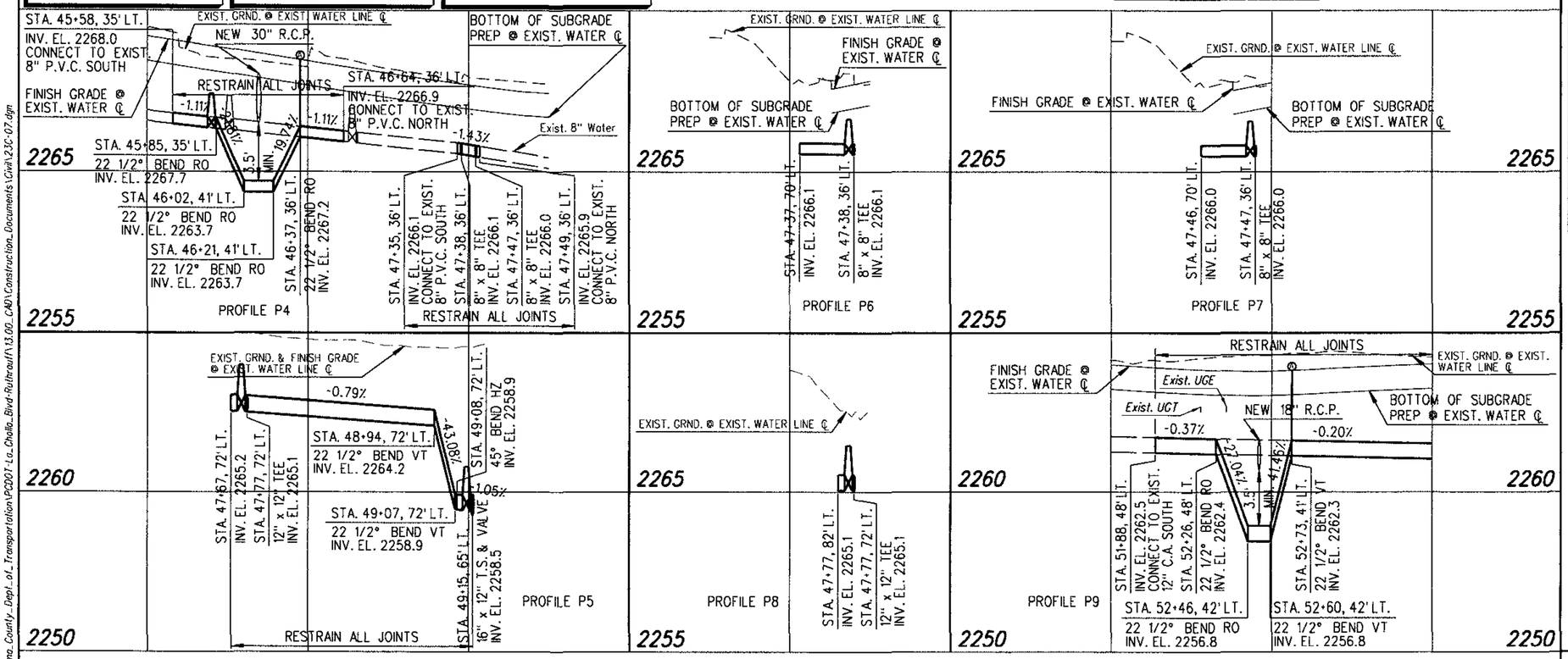

SERVICE WORK						
CODE		ADDRESS		PIPE SIZES & QUANT.(IN FEET±)		
		METER NUMBER & SIZE		¾"	1"	1½"	2"
1	R	4740 N. LA CHOLLA BLVD					
		97407515	1"		110		
2	T	4750 N. LA CHOLLA BLVD					
		SP-155	1½"			5	
3	R	4750 N. LA CHOLLA BLVD					
		96703202	1"		110		
TOTAL QUANTITIES OF CU PIPE FOR SERVICE WORK ONLY					220	5	

Arizona Blue Stake
1-800-STAKE-IT
1-800-782-5348
Call Two Working Days Before You Dig

Priscilla S. Cornelio, P.E., Director

No.	Revision Description	Engineer	Date

		Date
Designed	T. Celaya	July/2009
Drawn	T. Celaya	July/2009
Checked	R. Brittain	July/2009
Proj. Engr.	R. Brittain	Aug/2009

REGISTERED PROFESSIONAL ENGINEER (CIVIL) CERTIFICATE NO. 13763 ROBERT DEAN BRITTAIN DATE SIGNED 8-24-09 ARIZONA, U.S.A.
Expires 03-31-2011

HDR Engineering, Inc.
5210 East Williams Circle, Suite 530
Tucson, AZ 85711-4459
(520) 584-3600

Pima County Department of Transportation

WATER SYSTEM MODIFICATIONS
LA CHOLLA BLVD.
RUTHRAUFF RD. TO RIVER RD.

Scales: Horiz. 1"=40' Vert. 1"=4'

Sheet W6 of W12

Project • 4LCITR

08\20\09 4:56:04 PM aledesma

01245
0000000000005994
Pima_County_Dept_of_Transportation\PC001-La_Cholla_Blvd-Ruthrauff\13.00_CAD\Construction_Documents\Civil\23C-07.dgn

STA. 54+00, 40' LT. TO
STA. 54+76, 45' LT.
1- 12" x 6" CROSS
1- 12" VALVE, B. & C., FLGxMJ
81 L.F. 12" P.V.C., DR14(CL305)
CONNECT TO EXIST. 12" C.A. NORTH
ABANDON & REMOVE EXIST.
76 L.F. 12" C.A. PIPE
SEE PROFILE P10 BELOW

STA. 54+42, 89' LT. TO
STA. 54+42, 58' RT.
1- 6" VALVE, B. & C.
31 L.F. 6" P.V.C., DR14(CL305)
CONNECT TO EXIST. 6" P.V.C. WEST
ABANDON & REMOVE EXIST.
47 L.F. 6" P.V.C. PIPE
SEE PROFILE P11 BELOW

STA. 55+27, 54' LT.
1- 6" x 90° BEND
10 L.F. 6" D.I.P.(CL350)
1- NEW 6" FIRE HYDRANT
INSTALL PER W-500
CONNECT TO EXIST. VALVE
1- REMOVE & DISPOSE
EXIST. FIRE HYDRANT

STA. 60+05, 41' LT. TO
STA. 60+62, 41' LT.
57 L.F. 12" P.V.C., DR14(CL305)
CONNECT TO EXIST. 12" C.A. SOUTH
SEE PROFILE P12 BELOW

STA. 61+82, 40' LT.
23 L.F. ¾" CU. PIPE
STA. 61+63, 52' LT.
1-¾" ARV & VAULT
PER W-330

STA. 61+82, 40' LT. TO
STA. 62+00, 40' LT.
18 L.F. 12" P.V.C., DR14(CL305)
SEE PROFILE P12 BELOW

STA. 60+05, 41' LT. TO
STA. 62+00, 40' LT.
ABANDON & REMOVE EXIST.
195 L.F. 12" C.A. PIPE

STA. 60+62, 41' LT. TO
STA. 61+82, 40' LT.
124 L.F. 12" D.I.P.(CL350)
SEE PROFILE P12 BELOW

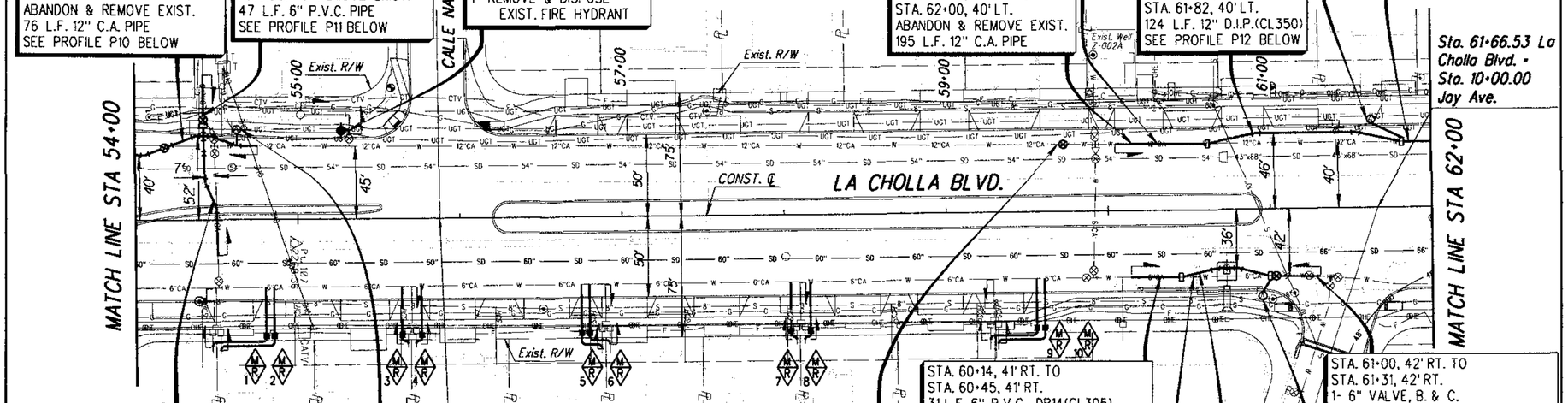

STA. 54+42, 58' LT. TO
STA. 54+51, 22' RT.
83 L.F. 6" D.I.P.(CL350)
CONNECT TO EXIST. 6" D.I.P. EAST
ABANDON & REMOVE EXIST.
68 L.F. 6" C.A. PIPE
SEE PROFILE P11 BELOW

STA. 54+63, 45' LT.
8 L.F. ¾" CU. PIPE
STA. 54+63, 53' LT.
1-¾" ARV & VAULT
PER W-330

STA. 59+73, 41' LT.
1- 12" VALVE, B. & C., MJxMJ
5 L.F. 12" P.V.C., DR14(CL305)
CUT INTO EXIST. 12" C.A.
SEE PROFILE P12 BELOW

STA. 60+14, 41' RT. TO
STA. 60+45, 41' RT.
31 L.F. 6" P.V.C., DR14(CL305)
CONNECT TO EXIST. 6" C.A. SOUTH
SEE PROFILE P13 BELOW

STA. 60+14, 41' RT. TO
STA. 61+31, 42' RT.
ABANDON & REMOVE EXIST.
117 L.F. 6" C.A. PIPE

STA. 60+45, 41' RT. TO
STA. 61+00, 42' RT.
59 L.F. 6" D.I.P.(CL350)
SEE PROFILE P13 BELOW

STA. 61+00, 42' RT. TO
STA. 61+31, 42' RT.
1- 6" VALVE, B. & C.
31 L.F. 6" P.V.C., DR14(CL305)
CONNECT TO EXIST. 6" C.A. NORTH
SEE PROFILE P13 BELOW

STA. 61+00, 42' RT.
12 L.F. ¾" CU. PIPE
STA. 60+95, 52' RT.
1-¾" ARV & VAULT PER W-330

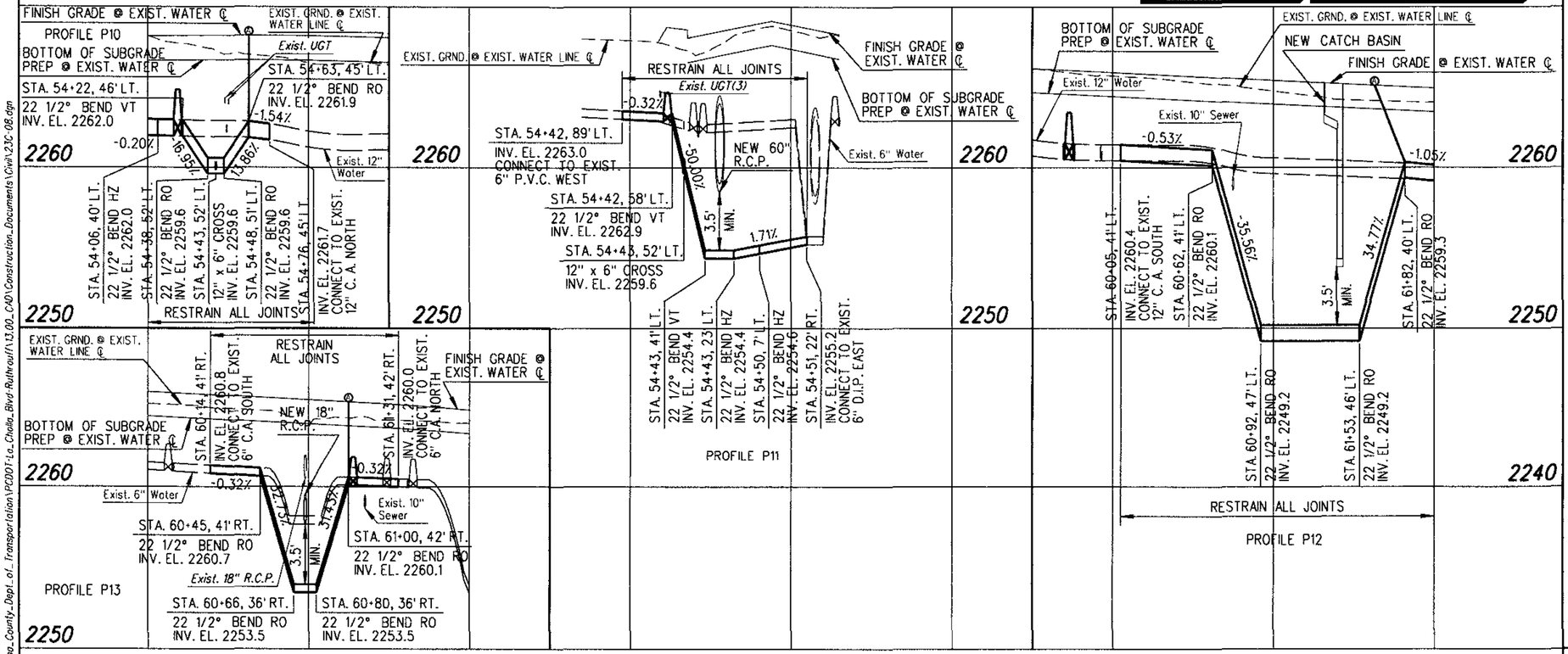

SERVICE WORK						
CODE		ADDRESS / METER NUMBER & SIZE		PIPE SIZES & QUANT.(IN FEET±) ¾"	1"	1½"	2"
1	M R	4830 N. LA CHOLLA BLVD / 83330894	⅝"		65		
2	M R	4838 N. LA CHOLLA BLVD / 26557649	⅝"		70		
3	M R	4846 N. LA CHOLLA BLVD / 68487463	⅝"		35		
4	M R	4854 N. LA CHOLLA BLVD / 92019563	⅝"		35		
5	M R	4900 N. LA CHOLLA BLVD / 26233881	⅝"		50		
6	M R	4908 N. LA CHOLLA BLVD / 04009703	⅝"		45		
7	M R	4916 N. LA CHOLLA BLVD / 88487464	⅝"		35		
8	M R	4924 N. LA CHOLLA BLVD / 04009702	⅝"		35		
9	M R	4932 N. LA CHOLLA BLVD / 36823153	⅝"		65		
10	M R	4940 N. LA CHOLLA BLVD / 11874241	⅝"		65		
TOTAL QUANTITIES OF CU PIPE FOR SERVICE WORK ONLY					500		

Arizona Blue Stake
1-800-STAKE-IT
1-800-782-5348
Call Two Working Days Before You Dig

Priscilla S. Cornelio, P.E., Director

No.	Revision Description	Engineer	Date

		Date
Designed	T. Celaya	July/2009
Drawn	T. Celaya	July/2009
Checked	R. Britton	July/2009
Proj. Engr.	R. Britton	Aug/2009

Expires 03-31-2011

HDR Engineering, Inc.
5210 East Williams Circle, Suite 530
Tucson, AZ 85711-4459
(520) 584-3600

WATER SYSTEM MODIFICATIONS
LA CHOLLA BLVD.
RUTHRAUFF RD. TO RIVER RD.

Pima County Department of Transportation

Scales: Horiz. 1"=40' Vert. 1"=4'

Project = 4LCITR

012145
00000000000059914
Pima_County_Dept._of_Transportation\PCDOT-La_Cholla_Blvd_Ruthrauff\13.00_CAD\Construction_Documents\Civil\23C-08.dgn

08\20\09 4:56:11 PM aledesma

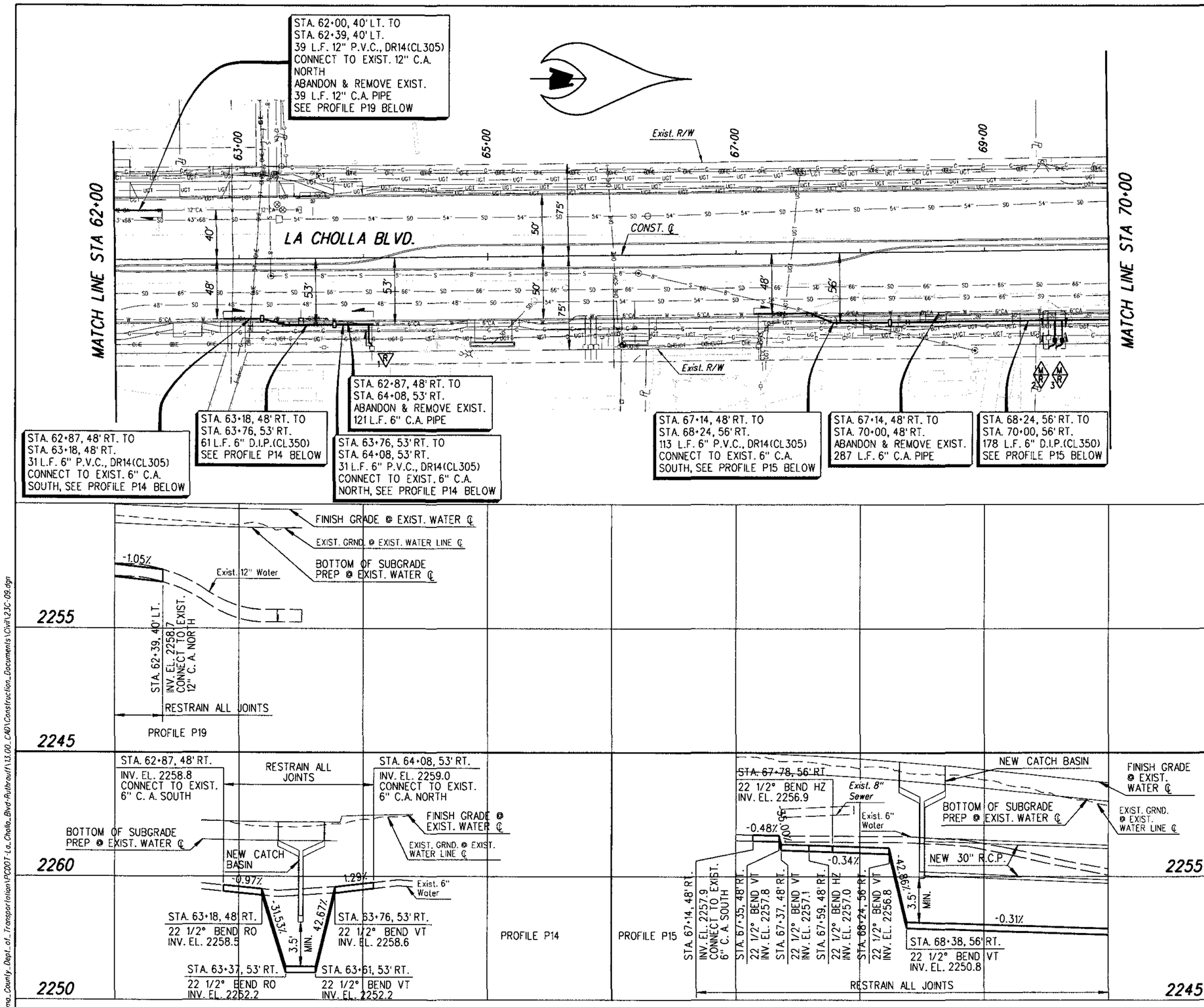

SERVICE WORK						
CODE		ADDRESS		PIPE SIZES & QUANT.(IN FEET±)		
		METER NUMBER & SIZE		¾"	1"	1½"	2"
1	R	5050 N. LA CHOLLA BLVD					
		29718057	2"				20
2	M R	5100 N. LA CHOLLA BLVD					
		34875949	⅝"		25		
3	M R	5120 N. LA CHOLLA BLVD					
		30855585	1"		25		
TOTAL QUANTITIES OF CU PIPE FOR SERVICE WORK ONLY					50		20

Arizona Blue Stake
1-800-STAKE-IT
1-800-782-5348
Call Two Working Days Before You Dig

No.	Revision Description	Engineer	Date

		Date
Designed	T. Celoya	July/2009
Drawn	T. Celoya	July/2009
Checked	R. Brittain	July/2009
Proj. Engr.	R. Brittain	Aug/2009

Priscilla S. Cornelio, P.E., Director

Pima County Department of Transportation

HDR Engineering, Inc.
5210 East Williams Circle, Suite 530
Tucson, AZ 85711-4459
(520) 584-3500

WATER SYSTEM MODIFICATIONS
LA CHOLLA BLVD.
RUTHRAUFF RD. TO RIVER RD.

Expires 03-31-2011

Scales	Horiz. 1"=40' Vert. 1"=4'	Sheet	W8 of W12	Page	146 of 356

012145
0000000000059914
Pima_County_Dept_of_Transportation\PCDOT-La_Cholla_Blvd-Ruthrauff\13.00_CAD\Construction_Documents\Civil\23C-09.dgn

08\20\09 4:56:17 PM aledesma

Project # 4LCITR

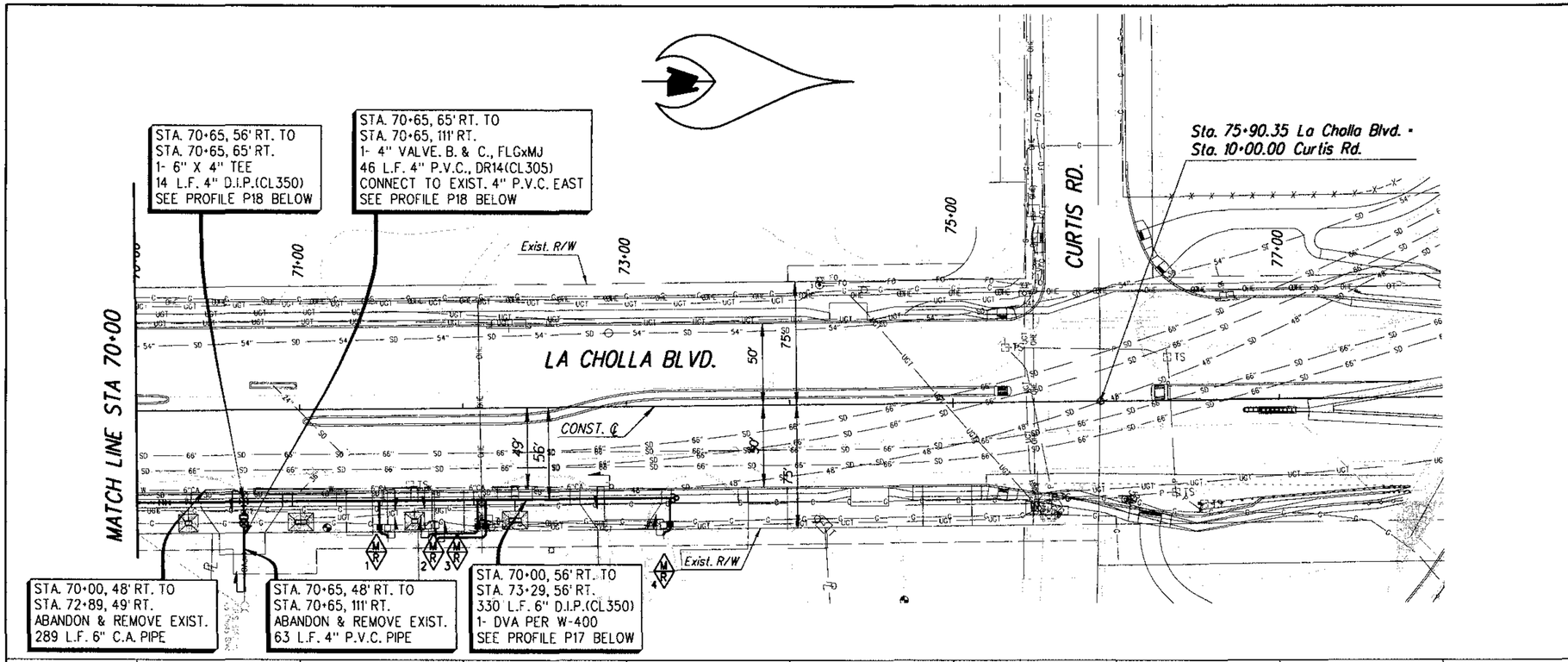

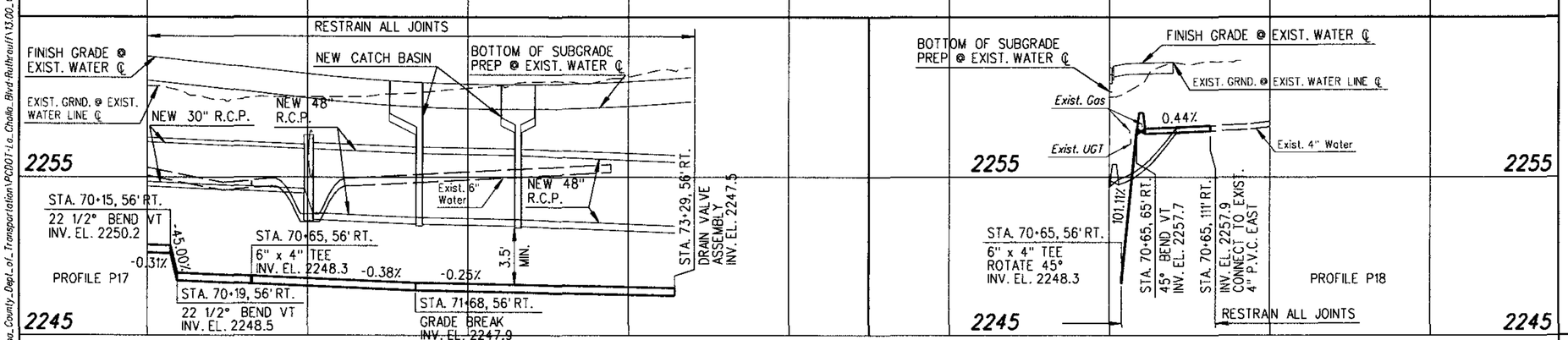

SERVICE WORK						
CODE		ADDRESS		PIPE SIZES & QUANT.(IN FEET±)			
		METER NUMBER & SIZE		3/4"	1"	1 1/2"	2"
1	M R	5150 N. LA CHOLLA BLVD SUITE B 44239362	1"		25		
2	M R	5150 N. LA CHOLLA BLVD SUITE 1 04009616	5/8"		50		
3	M R	5150-2 N. LA CHOLLA BLVD SUITE 2 28795478	5/8"		55		
4	M R	5190 N. LA CHOLLA BLVD 44032133	2"				25
TOTAL QUANTITIES OF CU PIPE FOR SERVICE WORK ONLY					130		25

Arizona Blue Stake
1-800-STAKE-IT
1-800-782-5348
Call Two Working Days Before You Dig

Priscilla S. Cornelio, P.E., Director

No.	Revision Description	Engineer	Date

		Date
Designed	T. Celaya	July/2009
Drawn	T. Celaya	July/2009
Checked	R. Brittain	July/2009
Proj. Engr.	R. Brittain	Aug/2009

Registered Professional Engineer (Civil) CERTIFICATE NO. 13762 ROBERT DEAN BRITTAIN Date Signed 8-24-09 ARIZONA, U.S.A.
Expires 03-31-2011

HDR Engineering, Inc.
3210 East Williams Circle, Suite 530
Tucson, AZ 85711-4459
(520) 584-3600

Pima County Department of Transportation

WATER SYSTEM MODIFICATIONS
LA CHOLLA BLVD.
RUTHRAUFF RD. TO RIVER RD.

Scales: Horiz. 1"=40' Vert. 1"=4' | Sheet W9 of W12 | Page 147 of 356

012145
000000000005994
Pima_County_Dept_of_Transportation\PCDOT-i.o._Challa_Blvd-Ruthrauf\13.00_CAD\Construction_Documents\Civil\23C-10.dgn

08\20\09 4:56:23 PM aledesma

Project = 4LCITR

NOTES

1. ALL NEW WATER MAINS REQUIRE DETECTABLE LOCATOR TAPE PER W-15. IN ADDITION, A TRACER WIRE SHALL ALSO BE INSTALLED. THE TRACER WIRE SHALL BE UF, THWN, THW, OR RHW/RHH SOLID 12 GAUGE WIRE. THE TRACER WIRE SHALL BE LAID DIRECTLY ON TOP OF THE PIPE IN CONTINUOUS LENGTHS BETWEEN VALVES, AIR RELEASE VALVES (ARV), DRAIN VALVE ASSEMBLIES (DVA) AND LATERAL CONNECTIONS TO EXISTING WATER MAINS.
2. THE TRACER WIRE SHALL BE SECURED TO THE PIPE WITH ADHESIVE TAPE AT INTERVALS NOT GREATER THAN 10'. THE INTENT IS TO KEEP THE TRACER WIRE IN PLACE DURING BACK FILL, NOT TO PERMANENTLY FIX THE TAPE TO THE PIPE.
3. THE TRACER WIRE SHALL BE SECURED TO VERTICAL COMPONENTS, I.E. VALVE RISERS, AIR RELEASE VALVE (ARV) LINES ETC., BY WRAPPING THE PIPE CIRCUMFERENCE WITH 10 MIL PVC PIPE TAPE OR ZIP TIES WITH A TENSILE STRENGTH OF NOT LESS THAN 50 LBS. AT INTERVALS NOT GREATER THAN ONE FOOT (1').
4. FOR DIP WATER MAINS, TRACER WIRE SHALL BE ATTACHED TO THE PIPE OUTSIDE OF THE POLYETHYLENE ENCASEMENT.
5. THE CONTINUITY OF EACH SEGMENT OF TRACER WIRE INSTALLED SHALL BE VERIFIED BY THE CONTRACTOR. FINAL ACCEPTANCE OF THE PROJECT WILL NOT BE GRANTED UNTIL WRITTEN CERTIFICATION, SIGNED BY THE CONTRACTOR, IS RECEIVED BY THE CONSTRUCTION SECTION OF THE CITY OF TUCSON WATER DEPARTMENT.
6. THE INSULATION ON TRACER WIRE INSTALLED ON POTABLE WATER MAINS SHALL BE COLORED BLUE. THE INSULATION ON TRACER WIRE INSTALLED ON RECLAIMED WATER LINES SHALL BE COLORED PURPLE.
7. WHERE THE ENDS OF NEW TRACER WIRE TERMINATE BELOW GROUND, THE END OF THE NEW TRACER WIRE SHALL BE TAPED WITH TWO HALF LAPPED LAYERS OF POLYETHYLENE OR POLYVINYL CHLORIDE TAPE (ELECTRICIANS TAPE).
8. METALLIC TAGS SHALL BE ONE INCH (1") WIDE BY A MINIMUM OF ONE AND ONE HALF INCHES LONG (1 1/2") AND A MINIMUM OF ONE SIXTEENT INCH (1/16") THICK WITH A ONE EIGHTH INCH (1/8") HOLE AT ONE CORNER OF THE TAG. IT SHALL BE ATTACHED TO THE TRACER WIRE WITH TWELVE GAUGE (12 GA.) WIRE. THE DIRECTION SHALL BE STAMPED WITH A HALF INCH (1/2") LETTER MARKING PUNCH.

TRACER WIRE - NOTES

NOT TO SCALE

SPLICES IN THE TRACER WIRE SHALL BE PERFORMED AS FOLLOWS:

1. THE INSULATION SHALL BE STRIPPED FROM THE WIRE EXPOSING ENOUGH BARE WIRE TO EXTEND APPROXIMATELY 1/2" BEYOND THE END OF THE COPPER SLEEVE.
2. THE COPPER SLEEVE SHALL BE OF THE APPROPRIATE SIZE FOR 12 GAUGE WIRE AND INTENDED FOR THIS PURPOSE.
3. CRIMP THE SLEEVE ON THE WIRE WITH A CRIMPING TOOL A MINIMUM OF 4 TIMES.
4. AFTER CRIMPING THE COPPER SLEEVE, BEND THE WIRE BACK OVER THE SLEEVE.
5. CLEAN AND DRY THE EXPOSED SECTION OF THE WIRE. WRAP THE CONNECTION WITH TWO HALF-LAPPED LAYERS OF POLYETHYLENE OR POLYVINYL CHLORIDE TAPE (ELECTRICIANS TAPE).

TRACER WIRE - SPLICE DETAIL

NOT TO SCALE

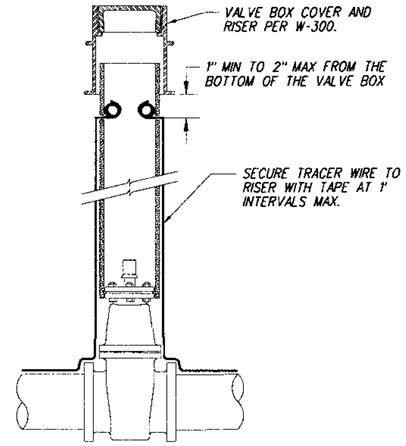

NOTES:

1. THREAD TRACER WIRES THROUGH 1/4" HOLES DRILLED IN THE RISER PIPE 2" TO 4" BELOW THE VALVE BOX.
2. A KNOT SHALL BE TIED IN THE TRACER WIRE INSIDE THE RISER PIPE AND A 3' COIL OF WIRE LEFT NEATLY INSIDE THE RISER.
3. THE TRACER WIRE SHALL ENTER THE RISER PIPE ON THE SAME SIDE AS THE WATER PIPE TO BE TRACED.

TRACER WIRE - IN LINE VALVES

NOT TO SCALE

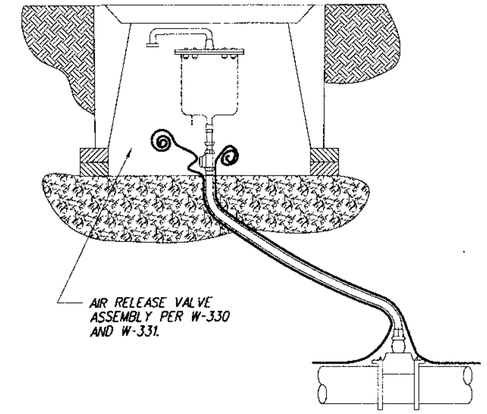

NOTES:

1. THE TRACER WIRE SHALL BE ATTACHED TO THE AIR RELEASE LINE WITH TAPE OR ZIP TIES AT A MAXIMUM OF 1' INTERVALS. A 3' COIL OF WIRE SHALL BE LEFT IN THE METER BOX FOR EACH TRACER WIRE INSTALLED.
2. TRACER WIRE SHALL BE LOCATED ON THE SAME SIDE OF THE METER BOX AS THE PIPE IT IS ATTACHED TO. THE COILED TRACER WIRE SHALL BE PERMANENTLY LABELED WITH A METALLIC TAG STATING THE DIRECTION (I.E. NORTH, EAST, ETC.) OF THE PIPE IT IS ATTACHED TO.
3. THIS DETAIL APPLIES TO AIR RELEASE VALVES IN W-330 AND W-331.

TRACER WIRE - AIR RELEASE VALVES

NOT TO SCALE

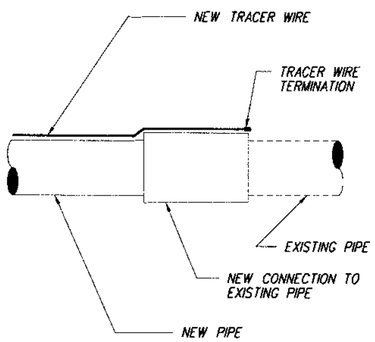

NOTES:

1. AT CONNECTIONS TO EXISTING PIPE WITH NO TRACER WIRE, THE NEW TRACER WIRE SHALL BE TERMINATED AT THE END OF THE CONNECTION DEVICE.

TRACER WIRE - EXIST WATER MAIN

NOT TO SCALE

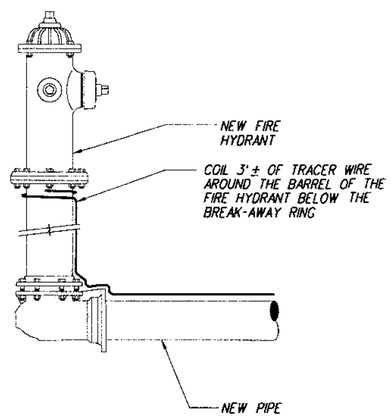

NOTES:

1. THE TRACER WIRE SHALL TERMINATE ABOVE GRADE BELOW THE BREAK-AWAY RING.

TRACER WIRE - FIRE HYDRANT

NOT TO SCALE

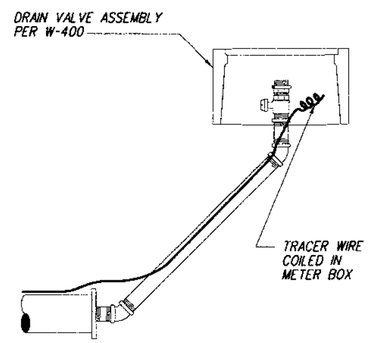

NOTES:

1. THE TRACER WIRE SHALL BE ATTACHED TO THE DRAIN VALVE ASSEMBLY LINE WITH TAPE OR ZIP TIES AT A MAXIMUM OF 1' INTERVALS. A 3' COIL OF WIRE SHALL BE LEFT IN THE METER BOX FOR EACH TRACER WIRE INSTALLED.
2. THIS DETAIL APPLIES TO THE DRAIN VALVE ASSEMBLY IN W-400.

TRACER WIRE - DVA (DRAIN VALVE ASSEMBLY)

NOT TO SCALE

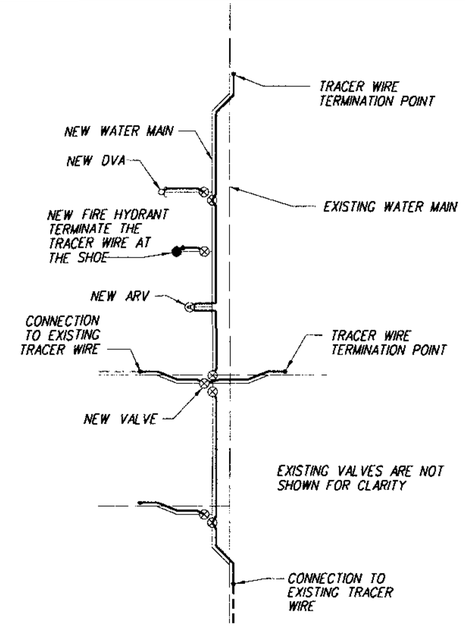

TRACER WIRE - SCENARIOS

NOT TO SCALE

Arizona Blue Stake
1-800-STAKE-IT
1-800-782-5348
Call Two Working Days Before You Dig

Priscilla S. Cornelio, P.E., Director

No.	Revision Description	Engineer	Date

		Date
Designed	T. Celaya	July/2009
Drawn	T. Celaya	July/2009
Checked	R. Britton	July/2009
Proj. Engr.	R. Britton	Aug/2009

REGISTERED PROFESSIONAL ENGINEER (CIVIL) CERTIFICATE NO. 13782 ROBERT DEAN BRITTAN DATE SIGNED 08-24-09 ARIZONA, U.S.A.
Expires 03-31-2011

HDR Engineering, Inc.
5210 East Williams Circle, Suite 530
Tucson, AZ 85711-4459
(520) 584-3600

Pima County Department of Transportation

WATER SYSTEM MODIFICATIONS
LA CHOLLA BLVD.
RUTHRAUFF RD. TO RIVER RD.

Scales		Sheet	W10 of W12	Page	148 of 356

012145
00000000000059914
Pima_County_Dept_of_Transportation\PCDOT-I.G._Cholla_Blvd-Ruthrauff\13.00_CAD\Construction_Documents\Civil\23C-15.dgn

08\20\09 4:56:29 PM aledesma

Project • 4LCITR

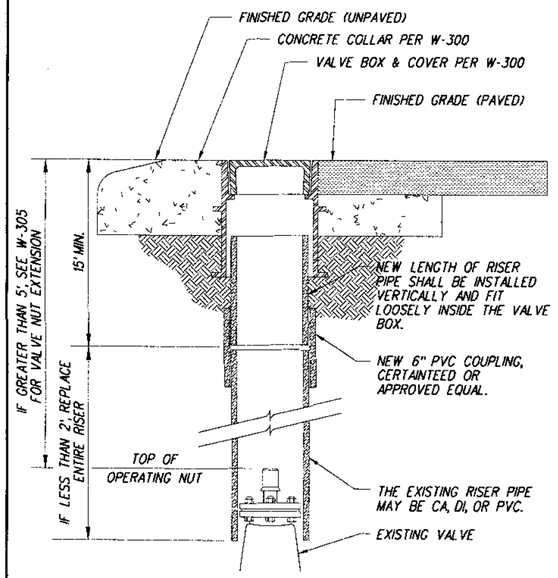

VALVE BOX ADJUSTMENT (VALVE RISER EXTENSION FOR RAISED PAVEMENT GRADES)

NOT TO SCALE

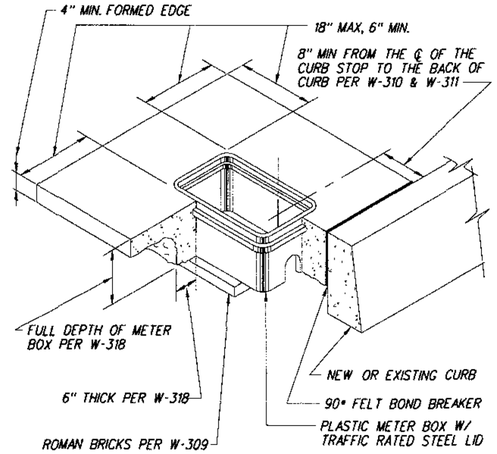

NOTES:

1. ALL NEW METER BOXES FOR ¾" AND 1" METERS TO BE INSTALLED WITH WATER SYSTEM MODIFICATION PROJECTS SHALL BE NEW PLASTIC METER BOXES PER W-318.
2. ALL METER BOXES SHALL BE INSTALLED AS TRAFFIC RATED (H-20).
3. THE CONCRETE COLLAR MAY BE EXTENDED TO THE MAXIMUMS SHOWN TO COORDINATE WITH THE FINISHED SURFACE TREATMENT MODULE.

METER BOX IN HARDSCAPED AREAS

NOT TO SCALE

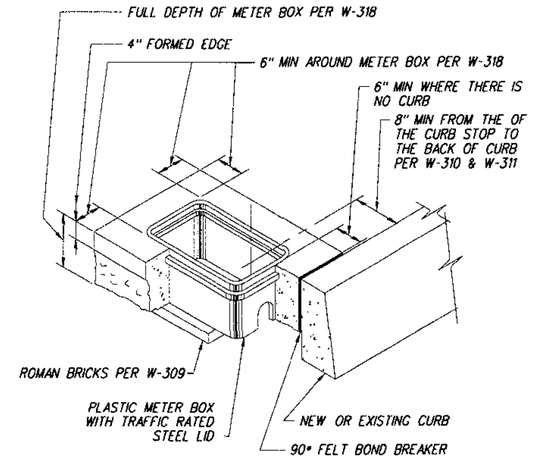

NOTES:

1. ALL NEW METER BOXES FOR ¾" AND 1" METERS TO BE INSTALLED WITH WATER SYSTEM MODIFICATION PROJECTS SHALL BE NEW PLASTIC METER BOXES PER W-318.
2. ALL METER BOXES AND LIDS SHALL BE INSTALLED AS TRAFFIC RATED (H-20).
3. THE TOP OF METER BOXES NOT ADJACENT TO CURBS SHALL BE INSTALLED ½" TO 1" ABOVE THE FINISHED GRADE. THE SURROUNDING COLLAR SHALL BE SLOPED TO MEET THE FINISHED GRADE PER W-309.

METER BOX IN UNPAVED AREAS

NOT TO SCALE

Priscilla S. Cornelio, P.E., Director

No.	Revision Description	Engineer	Date

		Date
Designed	T. Celaya	July/2009
Drawn	T. Celaya	July/2009
Checked	R. Brittan	July/2009
Proj. Engr.	R. Brittan	Aug/2009

REGISTERED PROFESSIONAL ENGINEER (CIVIL) CERTIFICATE NO. 13762 ROBERT DEAN BRITTAN Date Signed 8-24-09 ARIZONA, U.S.A.

Expires 03-31-2011

Pima County Department of Transportation

HDR Engineering, Inc.
5210 East Williams Circle, Suite 530
Tucson, AZ 85711-4459
(520) 584-3600

WATER SYSTEM MODIFICATIONS
LA CHOLLA BLVD.
RUTHRAUFF RD. TO RIVER RD.

Arizona Blue Stake
1-800-STAKE-IT
1-800-782-5348
Call Two Working Days Before You Dig

Scales		Sheet W11 of W12	Page 149 of 356

012145
G000000000059914
Pima_County_Dept_of_Transportation\PCDOT-La_Cholla_Blvd-Ruthrauff\13.00_CAD\Construction_Documents\Civil\23C-16.dgn

08\20\09 4:56:34 PM aledesmo

Project # 4LCITR

THIS SHEET IS FOR INFORMATION ONLY

Notes:
1. Contractor shall verify existing invert elevation(s) prior to start of public sewer construction.
2. For the DIP replacement at stations 60+80 and 63+25 the sewer contractor shall coordinate the schedule of the change outs with the roadway contractor. The sewer contractor installs flow management plan and removes existing sewer, roadway contractor installs new drain pipe, and sewer contractor installs change out for sewer and 1' of backfill above sewer.
3. For the DIP replacement at station 67+85 the contractor shall contact Tucson Water Operations prior to commencing work.

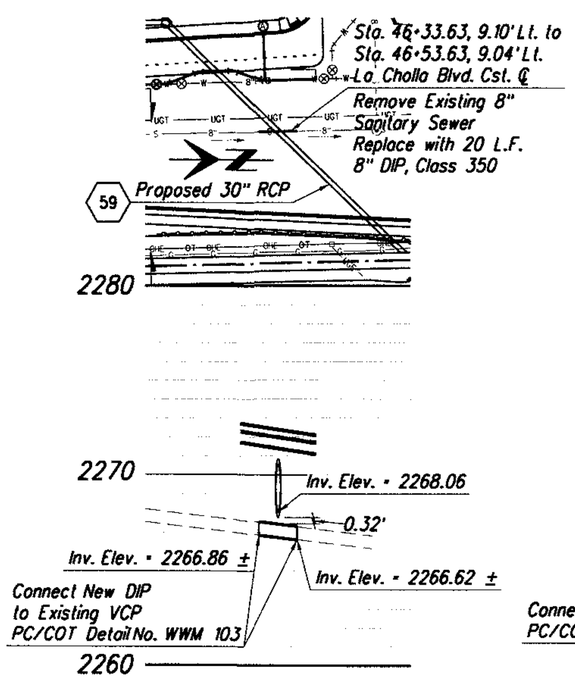

La Cholla Sta. 46+44

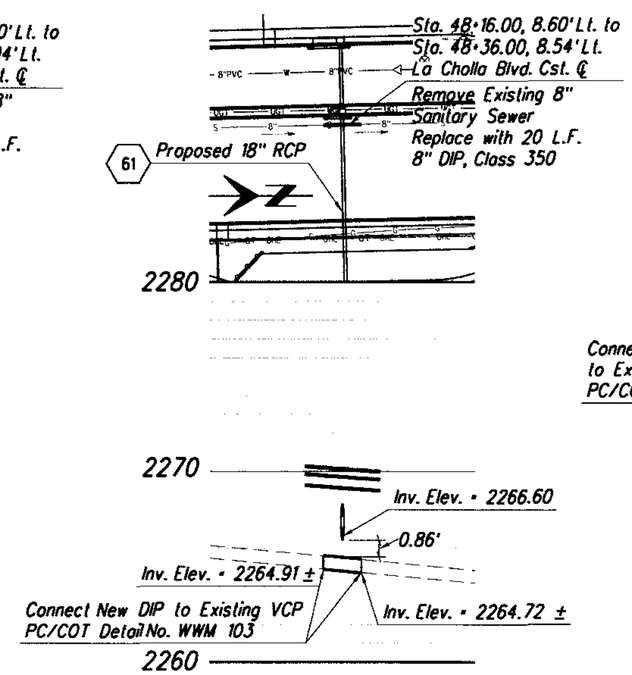

La Cholla Sta. 48+26

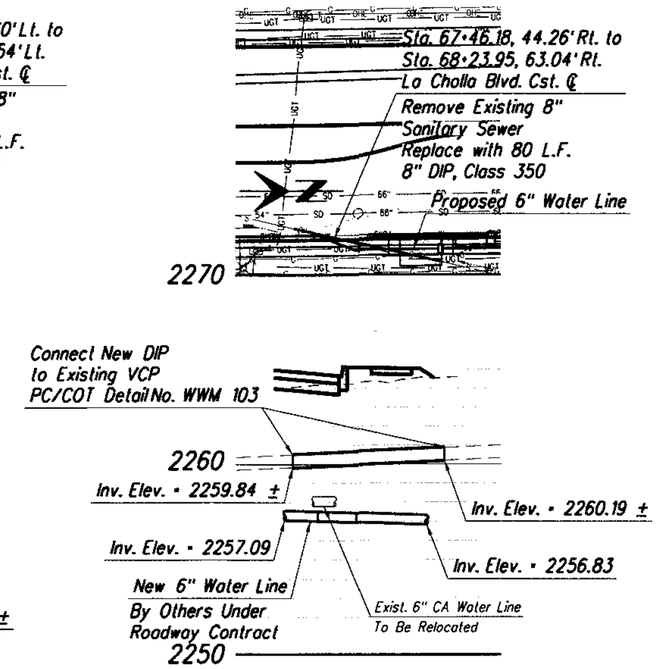

La Cholla Sta. 67+85

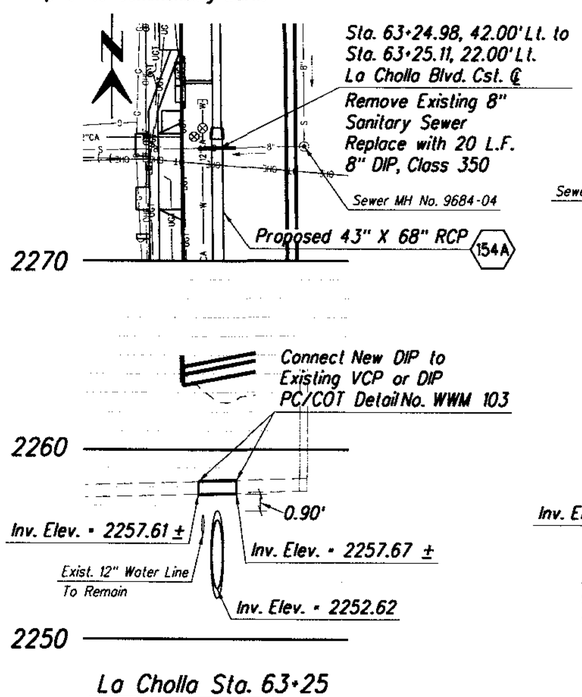

La Cholla Sta. 63+25

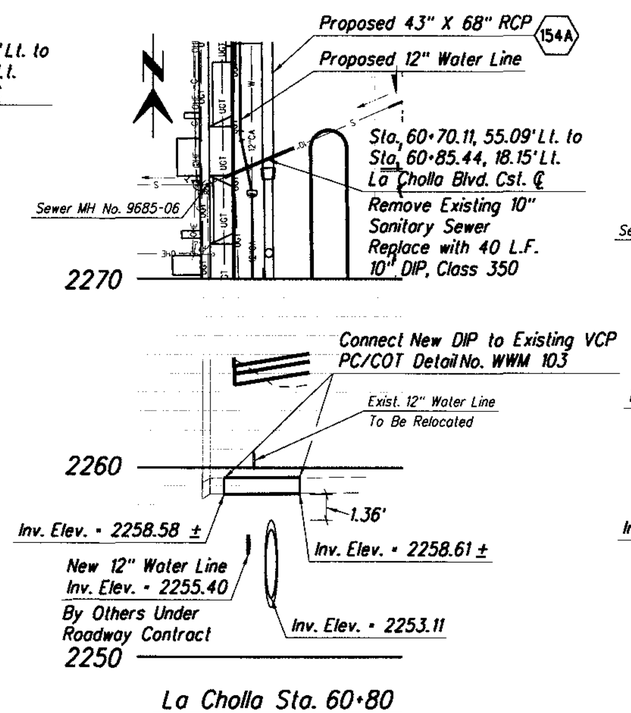

La Cholla Sta. 60+80

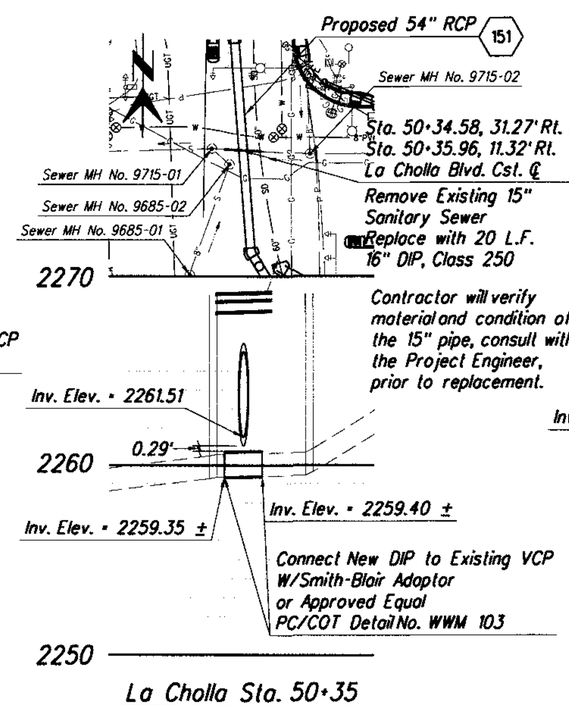

La Cholla Sta. 50+35

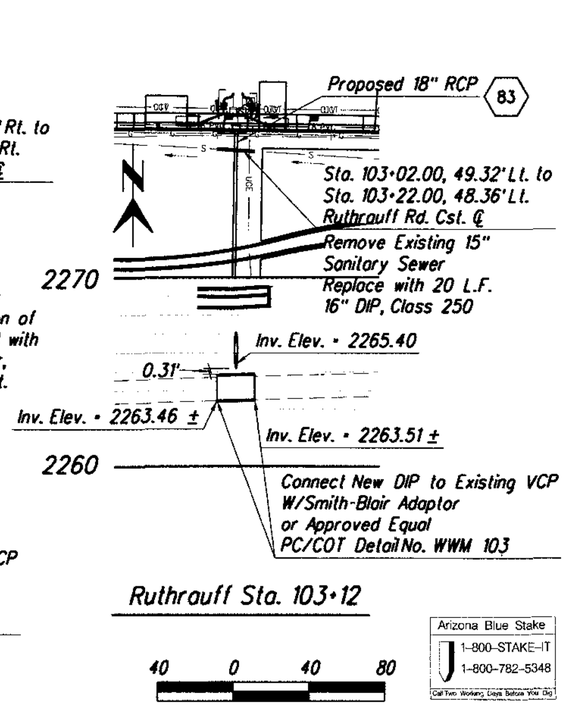

Ruthrauff Sta. 103+12

40 0 40 80

Arizona Blue Stake
1-800-STAKE-IT
1-800-782-5348
Call Two Working Days Before You Dig

Scales	Horiz. 1"=40' Vert. 1"=4'	Sheet	W12 of W12	Page	150 of 356

Project = 4LCITR

Pima County Department of Transportation

Priscilla S. Cornelio, P.E., Director

No.	Revision Description	Engineer	Date

		Date
Designed	A. Ledesma	July/2009
Drawn	A. Ledesma	July/2009
Checked	R. Britton	July/2009
Proj. Engr.	R. Britton	Aug/2009

Registered Professional Engineer (Civil) CERTIFICATE NO. 13762 ROBERT DEAN BRITTAIN Date Signed 8-3-09 ARIZONA, U.S.A.
Expires 03-31-2011

HDR Engineering, Inc.
3210 East Williams Circle, Suite 530
Tucson, AZ 85711-4459
(520) 584-3600

LA CHOLLA BLVD.:
RUTHRAUFF RD. TO RIVER RD.
PUBLIC SANITARY SEWER
MATERIAL REPLACEMENT PLANS

012145
00000000005991 4
Pima_County_Dept_of_Transportation\PCD01-La_Cholla_Blvd-Ruthrauff\13.00_CAD\Construction_Documents\Civil\23C-11.dgn

08\20\09 4:56:39 PM aledesma

GENERAL NOTES FOR SIGNING AND STRIPING PLANS

1. ALL PAVEMENT MARKINGS SHALL CONFORM TO PIMA COUNTY / CITY OF TUCSON (PC/COT) STANDARDS AND SPECIFICATIONS.
2. ALL REMOVAL OF EXISTING PAVEMENT MARKINGS SHALL BE ACCOMPLISHED IN ACCORDANCE WITH SECTION 701 OF THE PC/COT STANDARD SPECIFICATIONS. PAINTING OVER EXISTING STRIPING DOES NOT CONSTITUTE APPROVED STRIPING OBLITERATION.
3. THE PERMANENT PAVEMENT MARKINGS MAY BE MODIFIED AS DIRECTED BY THE TRAFFIC ENGINEER.
4. THE DESIGN SPEED LIMIT FOR LA CHOLLA IS: 40 MPH SOUTH OF RUTHRAUFF AND 50 MPH NORTH OF RUTHRAUFF. THE POSTED SPEED LIMIT ON LA CHOLLA IS: 35 MPH SOUTH OF RUTHRAUFF AND 45 MPH NORTH OF RUTHRAUFF. THE POSTED SPEED LIMIT ON RUTHRAUFF IS: 45 MPH. SIGN PLACEMENT SHALL BE BASED ON THE POSTED SPEED LIMIT.
5. THE CONTRACTOR SHALL BE RESPONSIBLE FOR THE LAYOUT AND INSTALLATION OF PAVEMENT MARKINGS ON FINAL SURFACE COURSE FOLLOWING CONTROL POINTS THAT HAVE BEEN SET NO MORE THAN 50 FEET APART ALONG THE LINES TO BE STRIPED. ON TANGENT SECTIONS OF A ROAD WHERE THE PAVEMENT MARKING PATTERN DOESN'T CHANGE, CONTROL POINTS CAN BE SET AT POINTS 200 FEET APART. THE LAYOUT AND INSPECTION OF ALL PAVEMENT MARKINGS SHALL BE APPROVED BY THE TRAFFIC ENGINEER PRIOR TO THE APPLICATION OF MATERIALS.
6. ALL LANE DIMENSIONS ARE FROM CENTER OF LANE LINE, CENTER OF DOUBLE LANE LINE, FACE OF CURB, OR EDGE OF PAVEMENT UNLESS OTHERWISE NOTED.
7. THE FINAL LONGITUDINAL STRIPING SHALL BE 60 MIL (0.060") THICK HOT-SPRAYED THERMOPLASTIC REFLECTORIZED STRIPING PLACED OVER THE TEMPORARY STRIPING WITHIN 14 TO 30 CALENDAR DAYS AFTER COMPLETION OF THE FINAL PAVEMENT SURFACE, OR AS DIRECTED BY THE TRAFFIC ENGINEER. ALL OTHER MARKINGS SHALL BE APPLIED AT THE SAME TIME. TEMPORARY STRIPING SHALL BE PAINT.
8. ALL FINAL TRANSVERSE MARKINGS SHALL BE HOT SPRAYED 90 MIL THERMOPLASTIC STRIPING (0.090"). ALL PAVEMENT ARROWS AND LEGENDS SHALL BE HOT SPRAYED 90 MIL THERMOPLASTIC PAVEMENT MARKING (0.090"). EXTRUDED THERMOPLASTIC OR PERFORMED APPLICATIONS MAY BE USED IF APPROVED BY THE TRAFFIC ENGINEER.
9. IT IS THE CONTRACTOR'S RESPONSIBILITY TO ENSURE THAT THE FINAL SURFACE COURSE IS PLACED SO THAT THE STRIPING IS OFFSET NO MORE THAN ONE FOOT CLEAR OF THE CONSTRUCTION JOINT, UNLESS OTHERWISE DIRECTED BY THE TRAFFIC ENGINEER.
10. ALL RAISED PAVEMENT MARKERS (RPMs) SHALL BE INSTALLED SO THAT THE REFLECTIVE FACE OF EACH MARKER IS FACING THE DIRECTION OF TRAFFIC AND IS PERPENDICULAR TO THE DIRECTION OF TRAFFIC FLOW. TYPE C PAVEMENT MARKERS SHALL BE INSTALLED SO THAT THE CLEAR REFLECTIVE FACE OF EACH MARKER IS FACING APPROACHING TRAFFIC AND PERPENDICULAR TO THE DIRECTION OF TRAFFIC FLOW.
11. BLUE RAISED PAVEMENT MARKERS SHALL BE PLACED ADJACENT TO FIRE HYDRANTS AS SHOWN ON SHEET 7-1 OF THE PC/COT PAVEMENT MARKING DESIGN MANUAL.
12. THE CONTRACTOR SHALL CLEAN THE ROADWAY SURFACE TO THE SATISFACTION OF THE TRAFFIC ENGINEER BY SWEEPING AND AIR-JET BLOWING IMMEDIATELY PRIOR TO THE PLACEMENT OF ALL PAVEMENT MARKINGS. THE TEMPERATURE SHALL NOT BE LESS THAN 50 DEGREES F. FOR THE PLACEMENT OF HOT SPRAY THERMOPLASTIC STRIPING, AND 40 DEGREES F. FOR THE PLACEMENT OF RPMs.
13. THE PAVEMENT MARKING DRAWINGS ARE SCHEMATIC ONLY. THE CONTRACTOR SHALL FOLLOW ALL DIMENSIONS, DETAILS, AND STANDARDS WHEN INSTALLING PAVEMENT STRIPING, MARKINGS AND MARKERS.
14. AT INTERSECTION APPROACHES ON ROADWAYS WITH MEDIANS, TYPE C RPM's SHALL BE PLACED AS PER PC/COT STANDARDS OR AS DIRECTED BY THE TRAFFIC ENGINEER.
15. THE ENGINEER OF RECORD SHALL BE REQUIRED TO PRODUCE AS-BUILT STRIPING PLANS WITHIN 90 DAYS OF STRIPING COMPLETION.
16. FINAL INSPECTION/ACCEPTANCE OF PAVEMENT MARKINGS SHALL BE PERFORMED BY THE TRAFFIC ENGINEER.
17. ALL PAVEMENT MARKINGS AND SIGNING SHALL BE INSTALLED AND SHALL BE PAID FOR BY THE PROJECT OWNER/DEVELOPER.
18. ALL SIGNS SHALL BE IN COMPLIANCE WITH THE 2003 EDITION OF THE MANUAL ON UNIFORM TRAFFIC CONTROL DEVICES (MUTCD), THE 2002 EDITION OF THE PIMA COUNTY AND CITY OF TUCSON TRAFFIC SIGNING DESIGN MANUAL AND THE SPECIAL PROVISIONS.
19. SIGNS MAY BE MODIFIED AND LOCATIONS ASJUSTED TO FIT CONDITIONS AS DIRECTED BY THE TRAFFIC ENGINEER.
20. POST LENGTHS INDICATED ON SIGN SUMMARY SHEETS ARE APPROXIMATE. THE CONTRACTOR SHALL FIELD VERIFY ACTUAL POST LENGTHS.
21. ALL SIGNS TO BE INSTALLED ON SQUARE-TUBE PERFORATED POSTS. ALL PERFORATED POSTS SHALL BE INSTALLED IN A CONCRETE FOUNDATION UNLESS OTHERWISE DIRECTED BY THE TRAFFIC ENGINEER.
22. ALL SIGN STATION LOCATIONS ARE APPROXIMATE. THE CONTRACTOR SHALL FIELD VERIFY ACTUAL SIGN LOCATIONS WITH THE TRAFFIC ENGINEER PRIOR TO THE INSTALLATION OF ALL SIGNS.
23. ALL WARNING AND REGULATORY SIGNS SHALL BE TYPE III (HIGH INTENSITY) SHEETING, UNLESS OTHERWISE DETERMINED BY THE JURISDICTION TRAFFIC ENGINEER. STREET NAME SIGNS (D3) SHALL BE FABRICATED USING TYPE III SHEETING AND ADVANCE STREET NAME SIGNS (TE9) SHALL BE FABRICATED USING TYPE III SHEETING. NO PARKING SIGNS SHALL BE TYPE III SHEETING. ALL SCHOOL ZONE SIGNS SHALL BE FLUORESCENT YELLOW-GREEN, DIAMOND GRADE (DG) SHEETING. ALL OVERHEAD SIGNS SHALL BE DIAMOND GRADE (DG3 OR EQUIVALENT) SHEETING. ALL OTHER SIGN PANELS SHALL HAVE HIGH INTENSITY PRISMATIC TYPE IV SHEETING.
24. ALL NEW SIGNS SHALL HAVE ALUMINUM BACKING, UNLESS OTHERWISE SPECIFIED.
25. ALL EXISITNG SIGNS TO BE REMOVED AS PART OF THIS PROJECT ARE TO BE DELIVERED TO THE PIMA COUNTY SIGN SHOP AT 1313 S. MISSION (520) 740-2631. THE CONTRACTOR IS RESPONSIBLE FOR UNLOADING THE SALVAGE MATERIAL. ANY SALVAGED SIGN THAT IS TO BE REUSED SHALL BE TEMPORARILY STORED IN A SAFE LOCATION UNTIL REINSTALLATION.
26. THE CONTRACTOR SHALL BE RESPONSIBLE FOR COORDINATING ALL WORK WITH BLUE STAKE AND INSTALLING ALL TRAFFIC SIGNS IN THE FIELD.

ESTIMATED SIGNING QUANTITIES

ITEM		UNITS	QUANTITIES
SIGN SHEETING TYPE	TYPE III (min)	SF	756
	DG	SF	148
SIGN POST	P-1	LF	1199
	P-1 FOUNDATION	EA	132
	U-CHANNEL	EA	11
SIGN BANDS (for poles)		EA	0

APPROXIMATE PAVEMENT MARKING QUANTITIES

ITEM	UNIT	QUANTITY
PAVEMENT MARKING (WHITE THERMOPLASTIC) (0.060")	LF	35,749
PAVEMENT MARKING (YELLOW THERMOPLASTIC) (0.060")	LF	15,579
PAVEMENT SYMBOL (WHITE-SPRAYED THERMOPLASTIC) (BIKE LANE SYMBOL w/ ARROW)	EA	20
PAVEMENT LEGEND (WHITE-SPRAYED THERMOPLASTIC) ("ONLY") ("STOP")	EA	17
PAVEMENT SYMBOL (WHITE-SPRAYED THERMOPLASTIC) (TURN ARROW)	EA	45
PAVEMENT SYMBOL (WHITE-SPRAYED THERMOPLASTIC) (MERGE ARROW)	EA	7
PAVEMENT MARKING (WHITE HOT-SPRAYED THERMOPLASTIC) (TRANSVERSE) (0.090")	LF	8,260
PAVEMENT MARKING (YELLOW HOT-SPRAYED THERMOPLASTIC) (TRANSVERSE) (0.090")	LF	453
RAISED PAVEMENT MARKER (TYPE D)	EA	134
RAISED PAVEMENT MARKER (TYPE C)	EA	302
RAISED PAVEMENT MARKER (TYPE F)	EA	6
RAISED PAVEMENT MARKER (TYPE G)	EA	372
REMOVE EXISTING PAVEMENT MARKING	LSUM	1

Arizona Blue Stake
1-800-STAKE-IT
1-800-782-5348
Call Two Working Days Before You Dig

Pima County Department of Transportation

Priscilla S. Cornelio, P.E., Director

No.	Revision Description	Engineer	Date

		Date
Designed	H. Schneider	July/2009
Drawn	H. Schneider, K. Monsen	July/2009
Checked	R. Britton	July/2009
Proj. Engr.	H. Schneider	Aug/2009

REGISTERED PROFESSIONAL ENGINEER (CIVIL) CERTIFICATE NO. 42774 HEIDI A. SCHNEIDER Expires 09-30-2011 ARIZONA, U.S.A.

HDR Engineering, Inc.
5210 East Williams Circle, Suite 530
Tucson, AZ 85711-4459
(520) 584-3600

SIGNING & STRIPING NOTES
LA CHOLLA BOULEVARD
RUTHRAUFF ROAD TO RIVER ROAD
W.O. 4LCITR

Scales | Sheet T1 of T25 | Page 151 of 356

Project • 4LCITR

012145
00000000059994
Pima_County_Dept_of_Transportation\PCD01-La_Cholla_Blvd-Ruthrauf\13.00_CAD\Construction_Documents\Civil\21C-00.dgn

08\20\09 4:56:45 PM aledesmo

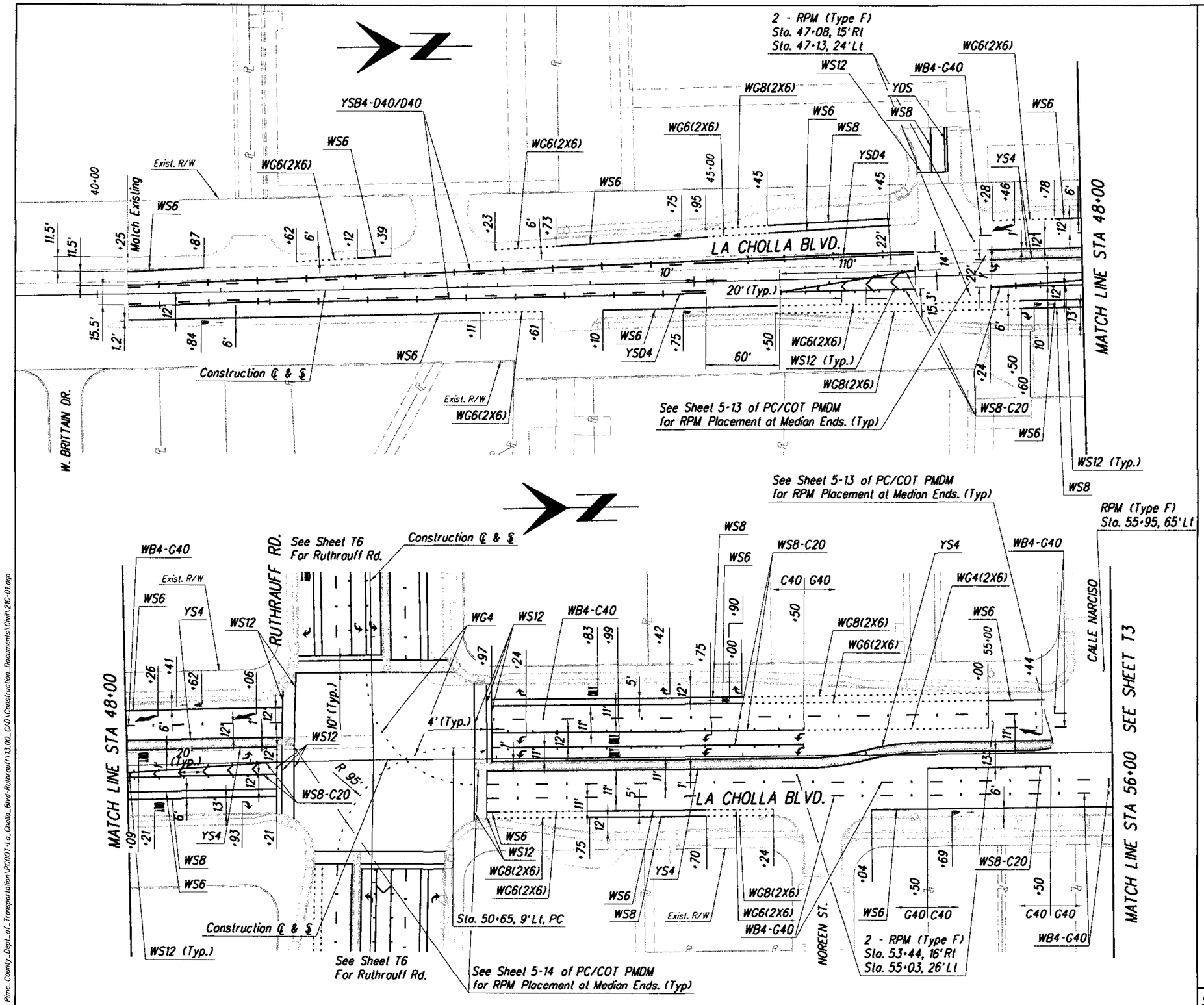

40 0 40 80

Arizona Blue Stake
1-800-STAKE-IT
1-800-782-5348
Call Two Working Days Before You Dig

Priscilla S. Cornelio, P.E., Director

No.	Revision Description	Engineer	Date

		Date
Designed	H. Schneider	July/2009
Drawn	A. Ledesma, D. Wustenberg	July/2009
Checked	R. Brittain	July/2009
Proj. Engr.	H. Schneider	Aug/2009

Registered Professional Engineer (Civil)
CERTIFICATE NO. 42774
HEIDI A. SCHNEIDER
Date Signed 9-30-09
ARIZONA, U.S.A.
Expires 09-30-2011

HDR Engineering, Inc.
5210 East Williams Circle, Suite 530
Tucson, AZ 85711-4459
(520) 584-3600

Pima County Department of Transportation

LA CHOLLA BLVD.
RUTHRAUFF RD. TO RIVER RD.
PAVEMENT MARKING PLANS
FOR LA CHOLLA BLVD.

Scales	Horiz. 1"=40' Vert. 1"=NA	Sheet	T2 of T25	Page	152 of 356

012145
0000000000059914
Pima_County_Dept_of_Transportation\PCDOT-La_Cholla_Blvd-Ruthrauff\13.00_CAD\Construction_Documents\Civil\21C-01.dgn

08\20\09 4:56:51 PM aledesma

Project • 4LCITR

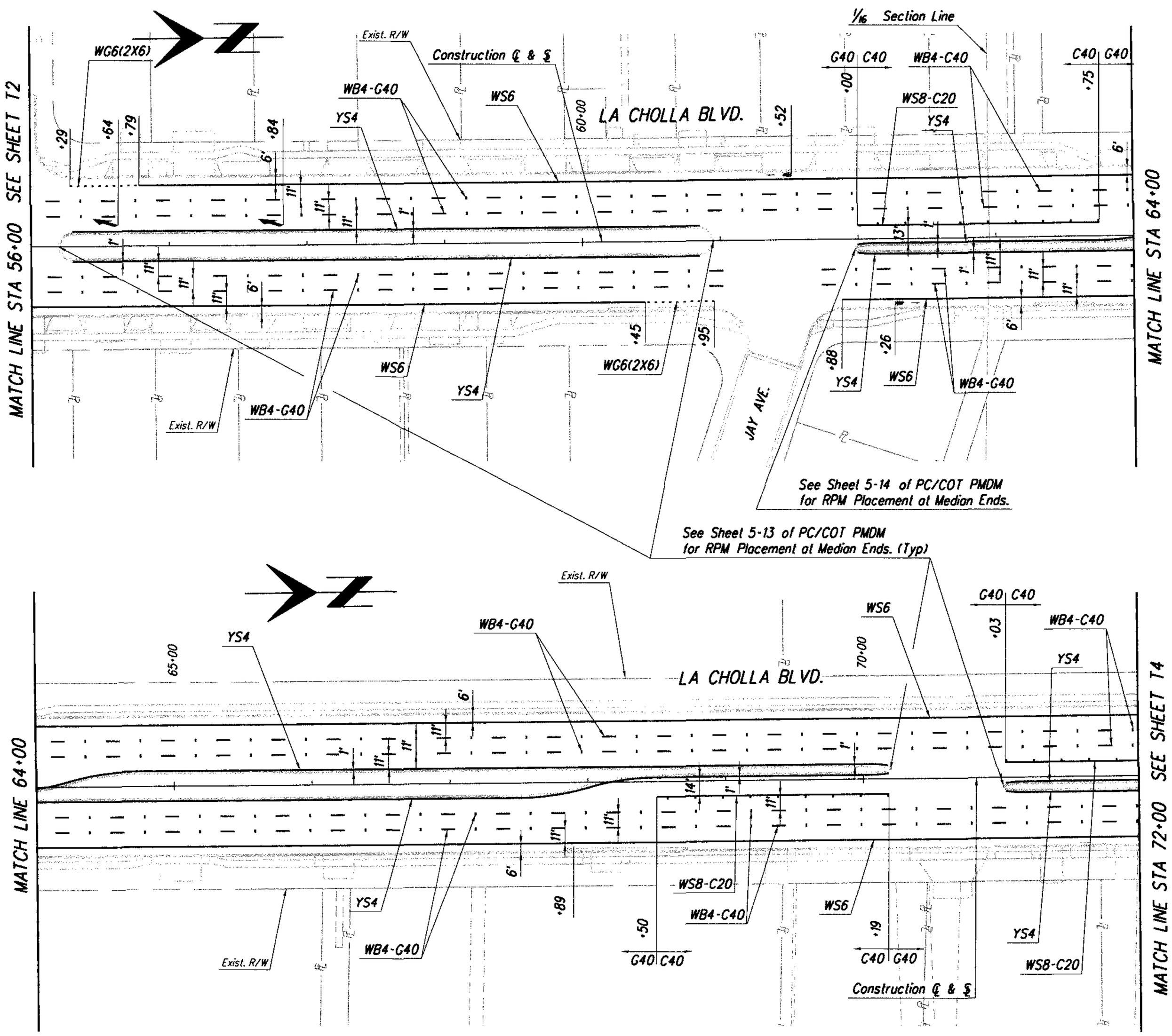

40 0 40 80

Arizona Blue Stake
1-800-STAKE-IT
1-800-782-5348
Call Two Working Days Before You Dig

No.	Revision Description	Engineer	Date

		Date
Designed	H. Schneider	July 2009
Drawn	A. Ledesma, D. Wolstenberg	July 2009
Checked	R. Brittain	July 2009
Proj. Eng.	H. Schneider	Aug 2009

Registered Professional Engineer
CERTIFICATE NO. 42774
HEIDI A. SCHNEIDER
ARIZONA, U.S.A.
Signature 9-24-09
Expires 09-30-2011

HDR Engineering, Inc.
5210 East Williams Circle, Suite 530
Tucson, AZ 85711-4459
(520) 584-3600

Pima County Department of Transportation

Priscilla S. Cornelio, P.E., Director

LA CHOLLA BLVD.:
RUTHRAUFF RD. TO RIVER RD.
PAVEMENT MARKING PLANS
FOR LA CHOLLA BLVD.

Scales	Horiz. 1"=40' Vert. 1"=NA	Sheet	T3 of T25	Page	153 of 356

Project • 4LCITR

08\20\09 4:56:56 PM aledesma

02145
0000000000599\4
Pima_County_Dept._of_Transportation\PCDOT-La_Cholla_Blvd-Ruthrauff\13.00_CAD\Construction_Documents\Civil\21C-02.dgn

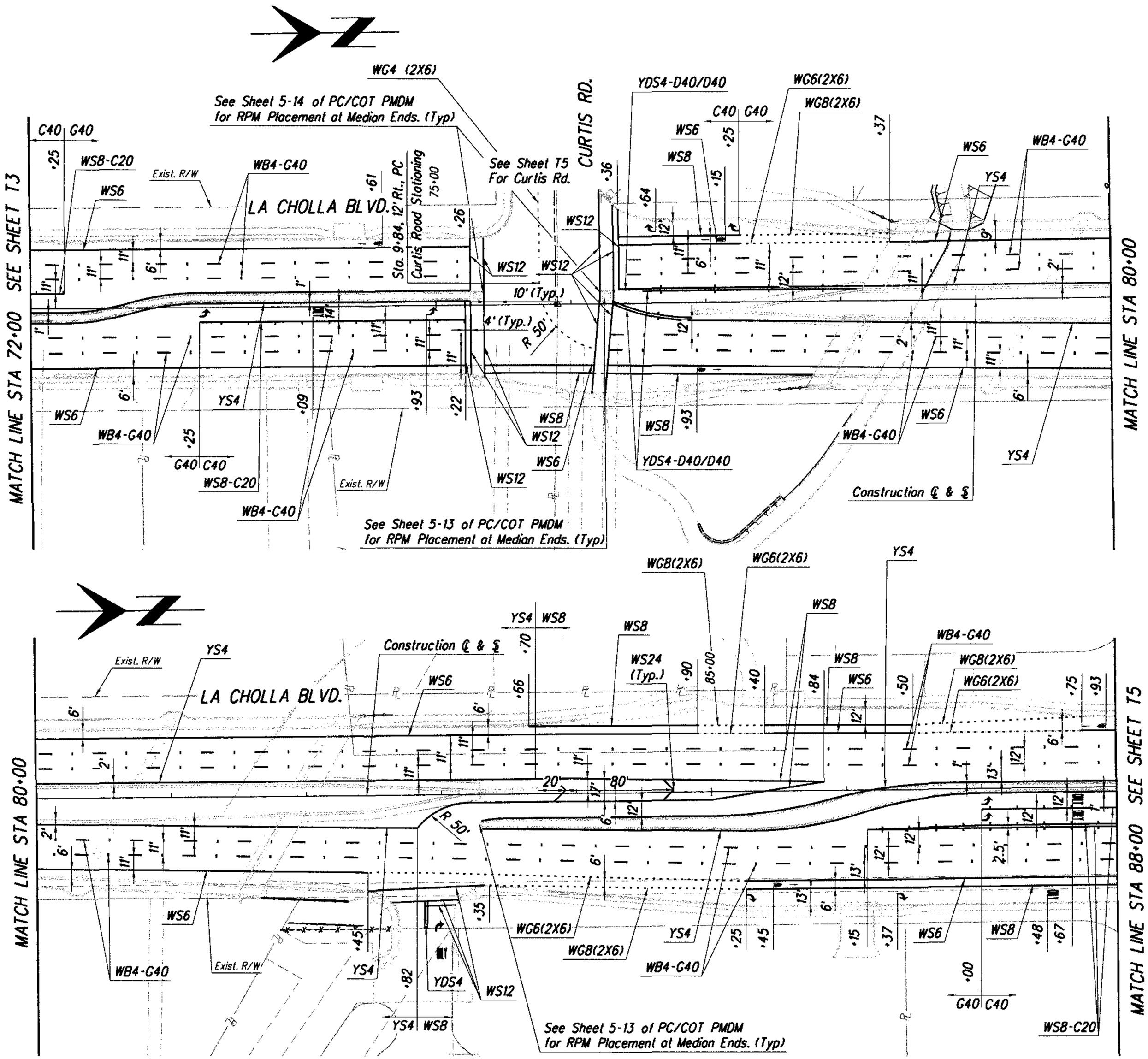

Arizona Blue Stake
1-800-STAKE-IT
1-800-782-5348
Call Two Working Days Before You Dig

40 0 40 80

Scales: Horiz. 1"=40' Vert. 1"=NA

Sheet T4 of T25

Page 154 of 356

Project # 4LCITR

Pima County Department of Transportation

LA CHOLLA BLVD.
RUTHRAUFF RD. TO RIVER RD.
PAVEMENT MARKING PLANS
FOR LA CHOLLA BLVD.

HDR Engineering, Inc.
5210 East Williams Circle, Suite 530
Tucson, AZ 85711-4459
(520) 584-3600

Expires 09-30-2011

No.	Revision Description	Engineer	Date

		Date
Designed	H. Schneider	July/2009
Drawn	A. Ledesma, D. Wostenberg	July/2009
Checked	R. Brittain	July/2009
Proj. Engr.	H. Schneider	Aug/2009

Priscilla S. Cornelio, P.E., Director

012145
00000000005914
Pima_County_Dept_of_Transportation\PCD01-La_Cholla_Blvd-Ruthrauff\13.00_CAD\Construction_Documents\Civil\21C-03.dgn

08\20\09 4:57:00 PM aledesma

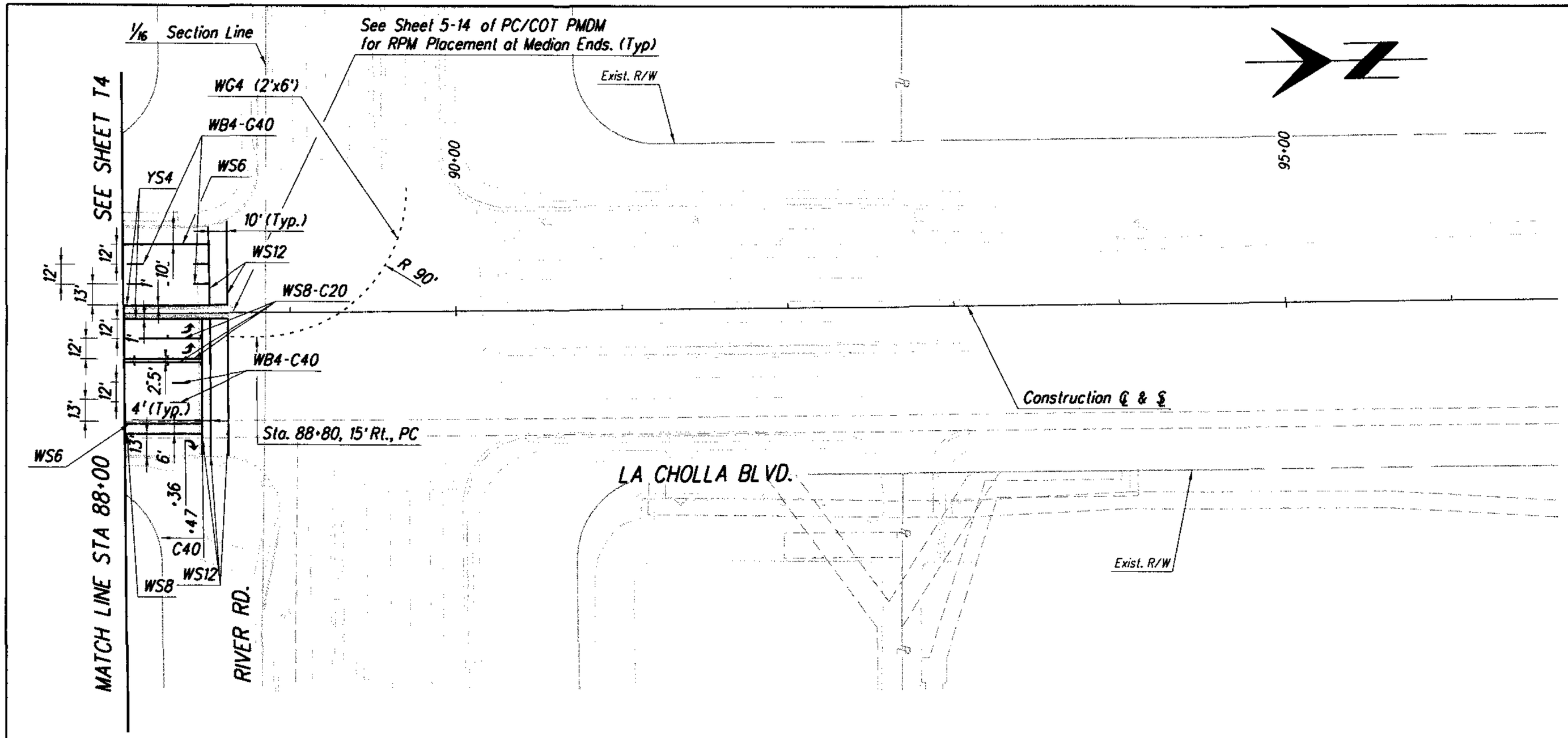

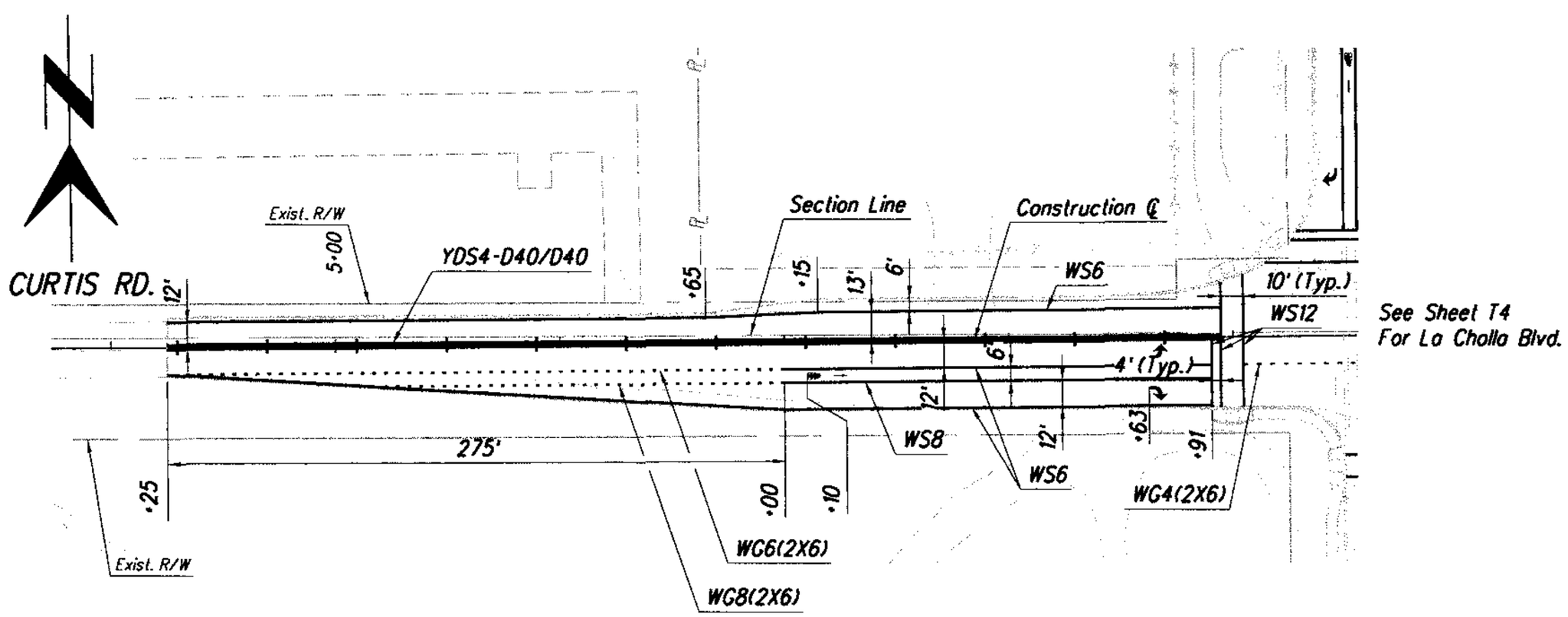

40 0 40 80

Arizona Blue Stake
1-800-STAKE-IT
1-800-782-5348
Call Two Working Days Before You Dig

Scales	Horiz. 1"=40' Vert. 1"=NA	Sheet	T5 of T25	Page	155 of 356

Pima County Department of Transportation

Priscilla S. Cornelio, P.E., Director

No.	Revision Description	Engineer	Date

		Date
Designed	H. Schneider	July/2009
Drawn	A. Ledesma, D. Wostenberg	July/2009
Checked	R. Brittain	July/2009
Proj. Engr.	H. Schneider	Aug/2009

Registered Professional Engineer
CERTIFICATE NO. 42774
HEIDI A. SCHNEIDER
ARIZONA, U.S.A.
Expires 09-30-2011

HDR Engineering, Inc.
5210 East Williams Circle, Suite 530
Tucson, AZ 85711-4459
(520) 584-3600

LA CHOLLA BLVD.
RUTHRAUFF RD. TO RIVER RD.
PAVEMENT MARKING PLANS
FOR LA CHOLLA BLVD. & CURTIS RD.

012145
00000000000059914
Pima_County_Dept_of_Transportation\PCDOT-La_Cholla_Blvd-Ruthrauff\13.00_CAD\Construction_Documents\Civil\21C-04.dgn

08\20\09 4:57:06 PM aledesma

Project • 4LCITR

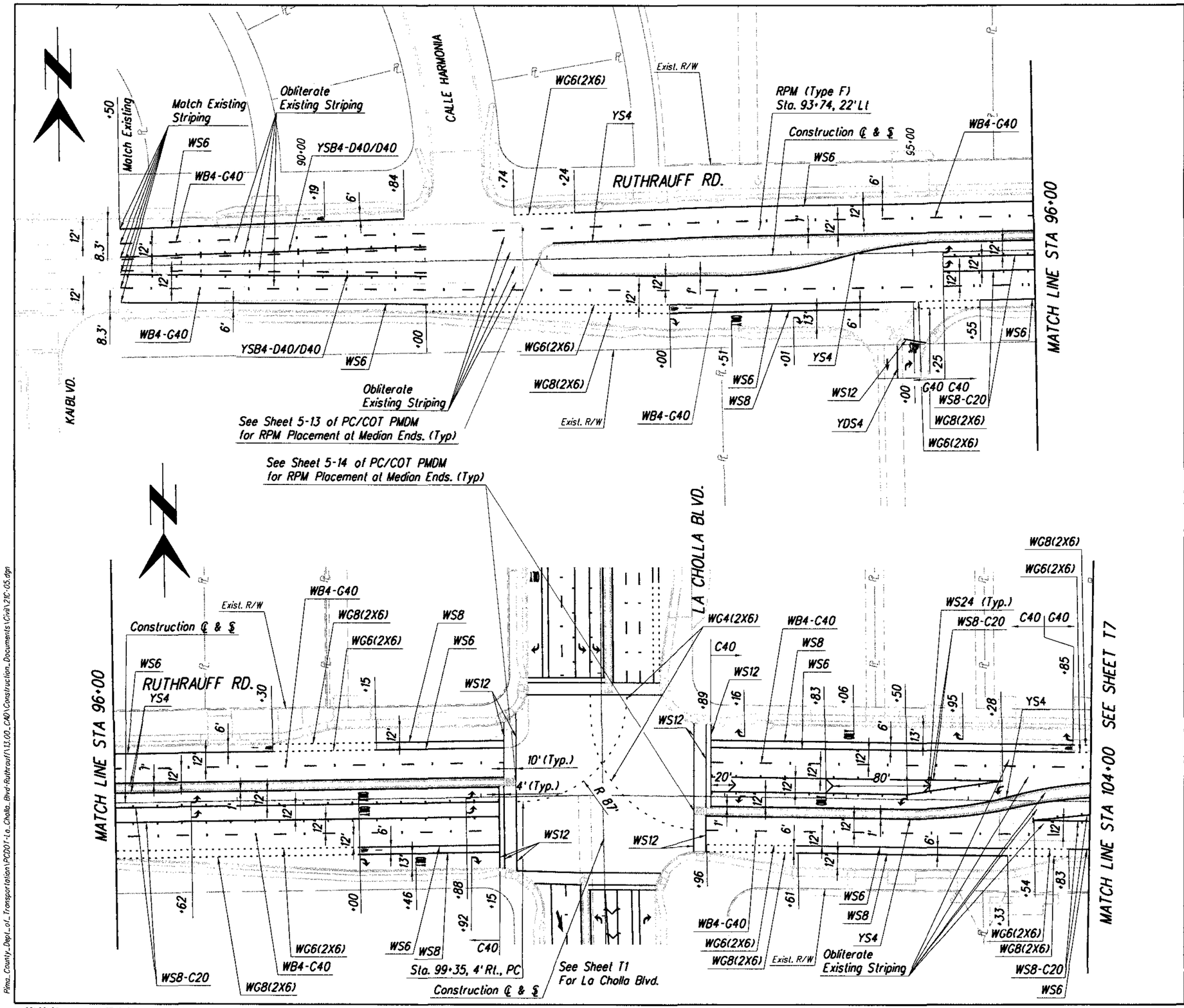

40 0 40 80

Arizona Blue Stake
1-800-STAKE-IT
1-800-782-5348
Call Two Working Days Before You Dig

Priscilla S. Cornelio, P.E., Director

Designed	H. Schneider	Date July/2009
Drawn	A. Ledesma, D. Westenberg	July/2009
Checked	R. Brittain	July/2009
Proj. Engr.	H. Schneider	Aug/2009

No.	Revision Description	Engineer	Date

Registered Professional Engineer CERTIFICATE NO. 42774 HEIDI A. SCHNEIDER ARIZONA, U.S.A.
Expires 09-30-2011

HDR Engineering, Inc.
5210 East Williams Circle, Suite 530
Tucson, AZ 85711-4459
(520) 584-3600

Pima County Department of Transportation

LA CHOLLA BL VD.
RUTHRAUFF RD. TO RIVER RD.
PAVEMENT MARKING PLANS
FOR RUTHRAUFF RD.

Scales	Horiz. 1"=40' Vert. 1"=NA	Sheet T6 of T25	Page 156 of 356

012145
00000000005991 4
Pima_County_Dept_of_Transportation\PCD01-La_Cholla_Blvd-Ruthrauff\13.00_CAD\Construction_Documents\Civil\216-05.dgn

08\20\09 4:57:12 PM aledesma

Project • 4LCITR

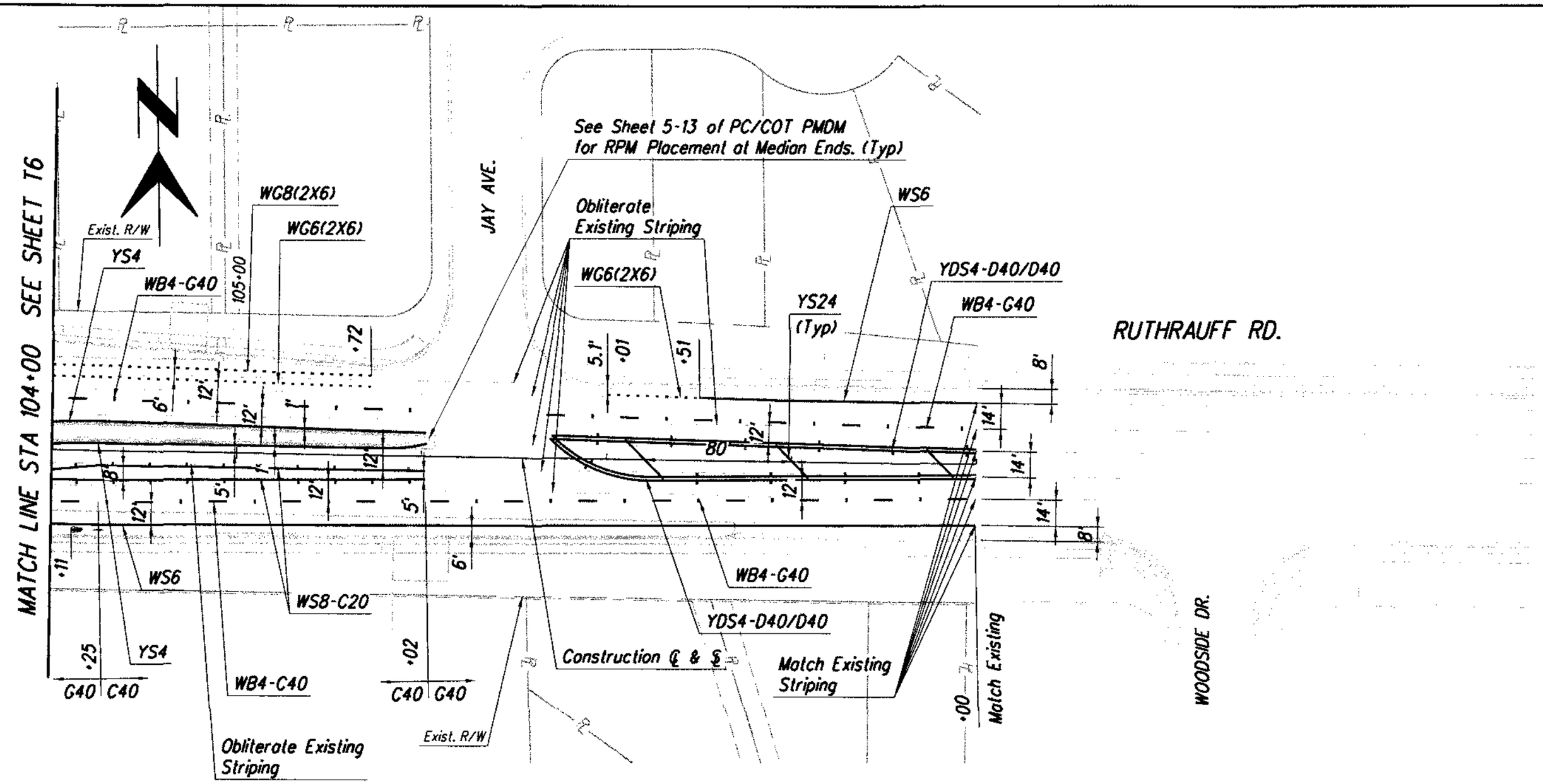

40 0 40 80

Arizona Blue Stake
1-800-STAKE-IT
1-800-782-5348
Call Two Working Days Before You Dig

Scales: Horiz. 1"=40' / Vert. 1"=NA

Sheet T7 of T25

Page 157 of 356

Pima County Department of Transportation

Priscilla S. Cornelio, P.E., Director

No.	Revision Description	Engineer	Date

		Date
Designed	H. Schneider	July/2009
Drawn	A. Ledesma, D. Westenberg	July/2009
Checked	R. Britton	July/2009
Proj. Engr.	H. Schneider	Aug/2009

Registered Professional Engineer (Civil) Certificate No. 42774 Heidi A. Schneider Date Signed 8-24-09 Arizona, U.S.A.

Expires 09-30-2011

HDR Engineering, Inc.
5210 East Williams Circle, Suite 530
Tucson, AZ 85711-4459
(520) 584-3600

LA CHOLLA BLVD.
RUTHRAUFF RD. TO RIVER RD.
PAVEMENT MARKING PLANS
FOR RUTHRAUFF RD.

012145
00000000005914
Pima_County_Dept_of_Transportation\PCDOT-La_Cholla_Blvd-Ruthrauff\13.00_CAD\Construction_Documents\Civil\2IC-06.dgn

08\20\09 4:57:19 PM aledesma 4LCITR Project # 4LCITR

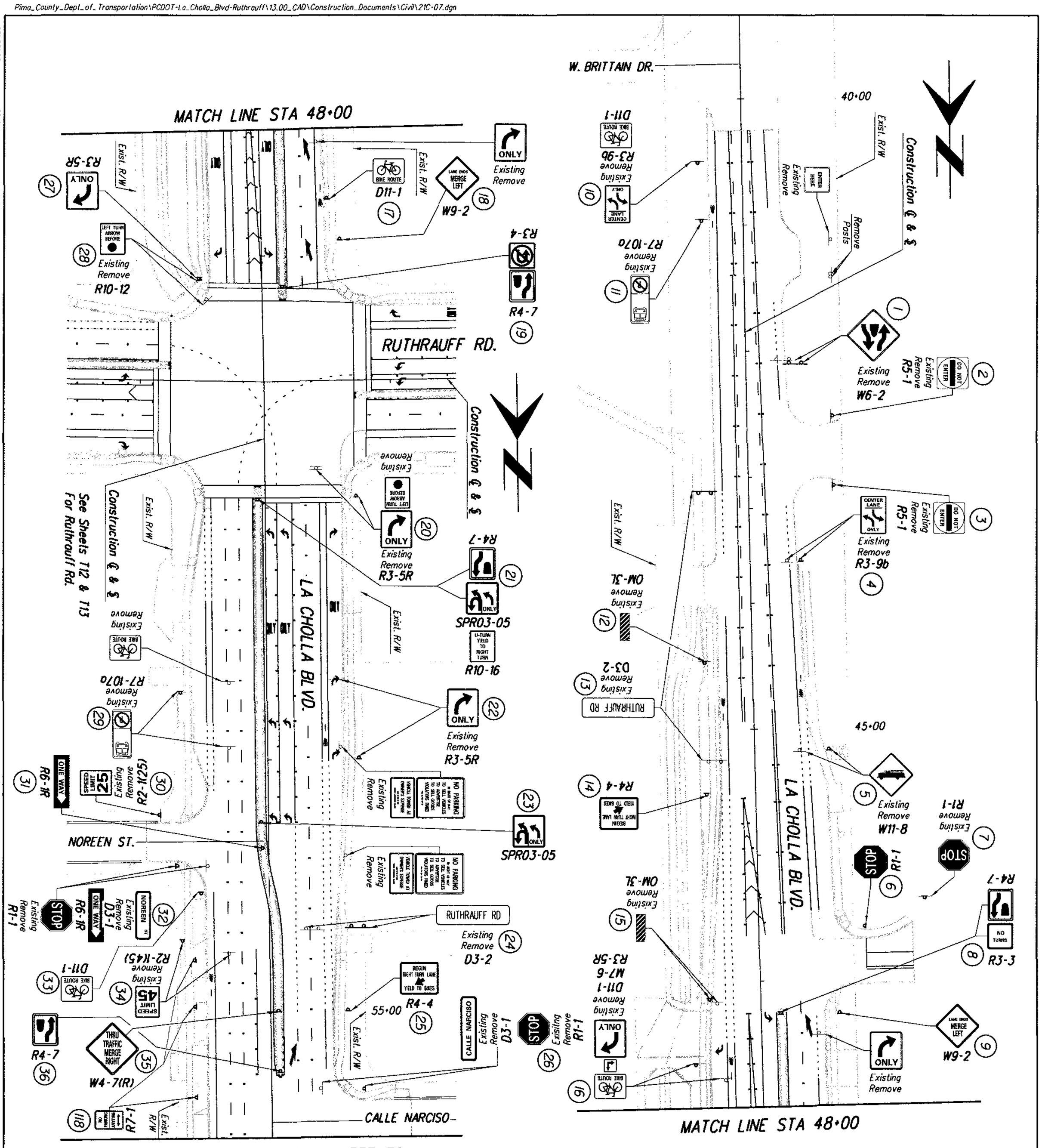

Scales: Horiz. 1"=40' Vert. 1"=NA

40 0 40 80

Arizona Blue Stake
1-800-STAKE-IT
1-800-782-5348
Call Two Working Days Before You Dig

Sheet T8 of T25

Page 158 of 356

Project • 4LCITR

08\20\09 4:57:24 PM aledesma

Pima County Department of Transportation

Priscilla S. Cornelio, P.E., Director

LA CHOLLA BLVD.
RUTHRAUFF RD. TO RIVER RD.
SIGNING PLANS
FOR LA CHOLLA BLVD.

HDR

HDR Engineering, Inc.
5210 East Williams Circle, Suite 530
Tucson, AZ 85711-4459
(520) 584-3600

Expires 06-30-2011

No.	Revision Description	Engineer	Date

		Date
Designed	H. Schneider	July/2009
Drawn	A. Ledesma, K. Monsen	July/2009
Checked	R. Brittain	July/2009
Proj. Engr.	H. Schneider	Aug/2009

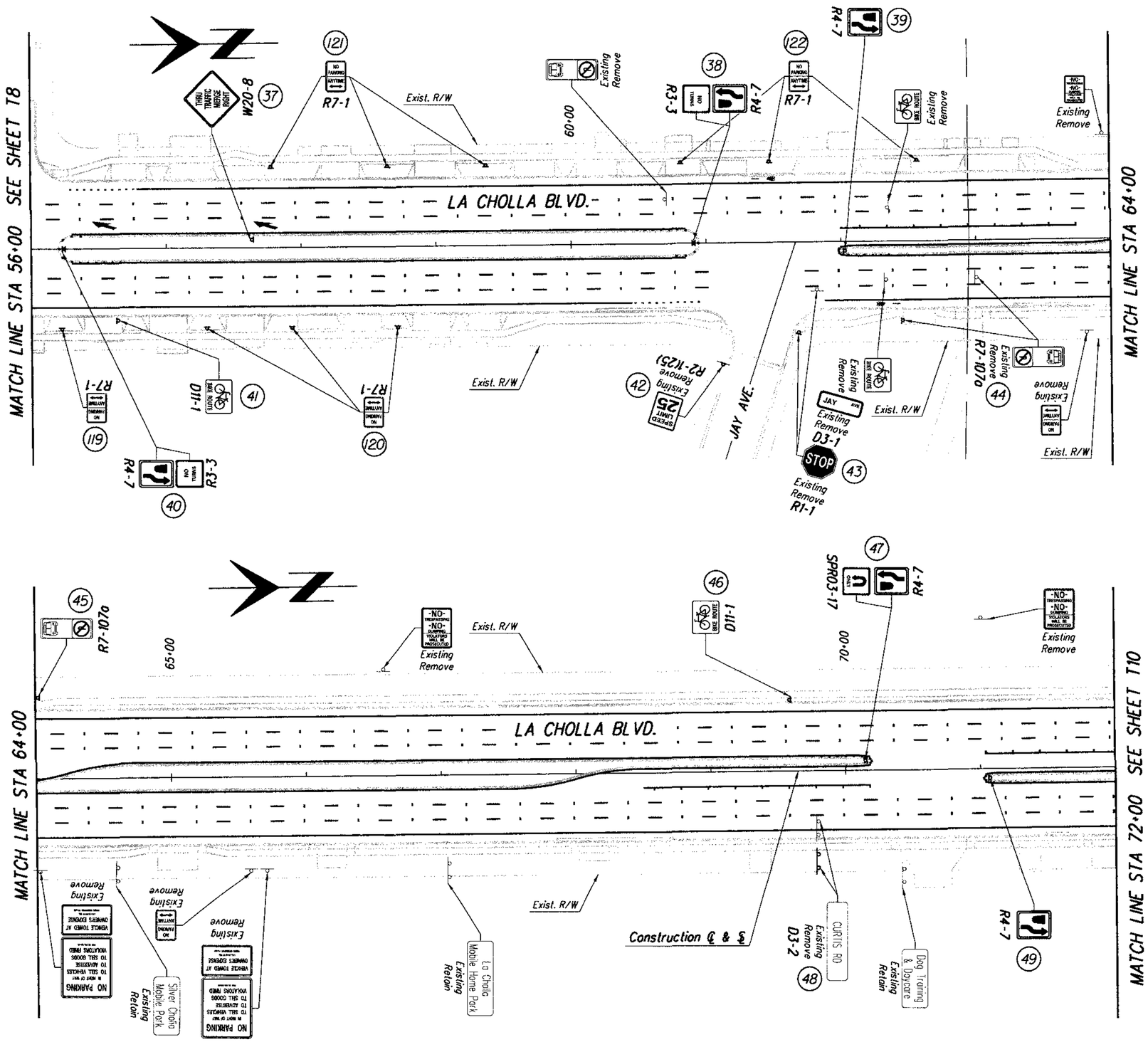

No.	Revision Description	Engineer	Date

		Date
Designed	H. Schneider	July/2009
Drawn	A. Ledesma, K. Monsen	July/2009
Checked	R. Britton	July/2009
Proj. Engr.	H. Schneider	Aug/2009

Registered Professional Engineer (Civil) CERTIFICATE NO. 42774 HEDI A. SCHNEIDER ARIZONA, U.S.A. Expires 09-30-2011

Pima County Department of Transportation

Priscilla S. Cornelio, P.E., Director

HDR Engineering, Inc. 5210 East Williams Circle, Suite 530 Tucson, AZ 85711-4459 (520) 594-3600

LA CHOLLA BLVD.
RUTHRAUFF RD. TO RIVER RD.
SIGNING PLANS
FOR LA CHOLLA BLVD.

40 0 40 80

Arizona Blue Stake
1-800-STAKE-IT
1-800-782-5348
Call Two Working Days Before You Dig

Scales	Horiz. 1"=40' Vert. 1"=NA	Sheet	T9 of T25	Page	159 of 356

012145
00000000000039914
Pima_County_Dept_of_Transportation\PCDOT-La_Cholla_Blvd-Ruthrauff\13.00_CAD\Construction_Documents\Civil\216-08.dgn

08\20\09 4:57:32 PM aledesma

Project • 4LCITR

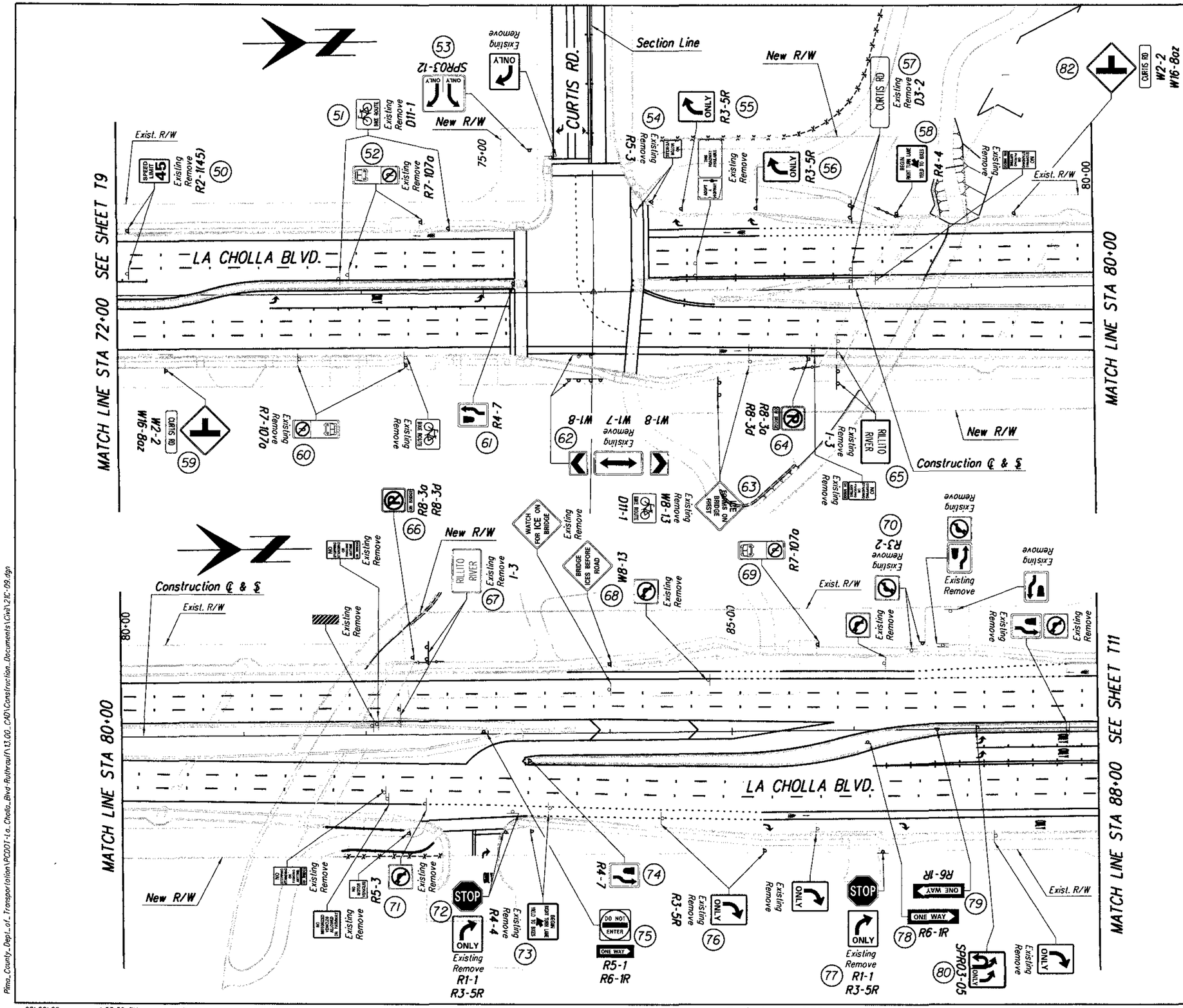

Pima County Department of Transportation

Priscilla S. Cornelio, P.E., Director

No.	Revision Description	Engineer	Date

		Date
Designed	H. Schneider	July 2009
Drawn	A. Ledesma, K. Monsen	July 2009
Checked	R. Britton	July 2009
Proj. Engr.	H. Schneider	Aug 2009

Registered Professional Engineer
CERTIFICATE NO. 42774
HEIDI A. SCHNEIDER
ARIZONA, U.S.A.
Expires 09-30-2011

HDR Engineering, Inc.
5210 East Williams Circle, Suite 530
Tucson, AZ 85711-4459
(520) 584-3600

LA CHOLLA BLVD.
RUTHRAUFF RD. TO RIVER RD.
SIGNING PLANS
FOR LA CHOLLA BLVD.

Scales	Horiz. 1"=40' Vert. 1"=NA	Sheet	T10 of T25	Page	160 of 356

012145
00000000005991
Pima_County_Dept_of_Transportation\PCD01-La_Cholla_Blvd-Ruthrauff\13.00_CAD\Construction_Documents\Civil\21C-09.dgn

08\20\09 4:57:38 PM aledesma

Project # 4LCITR

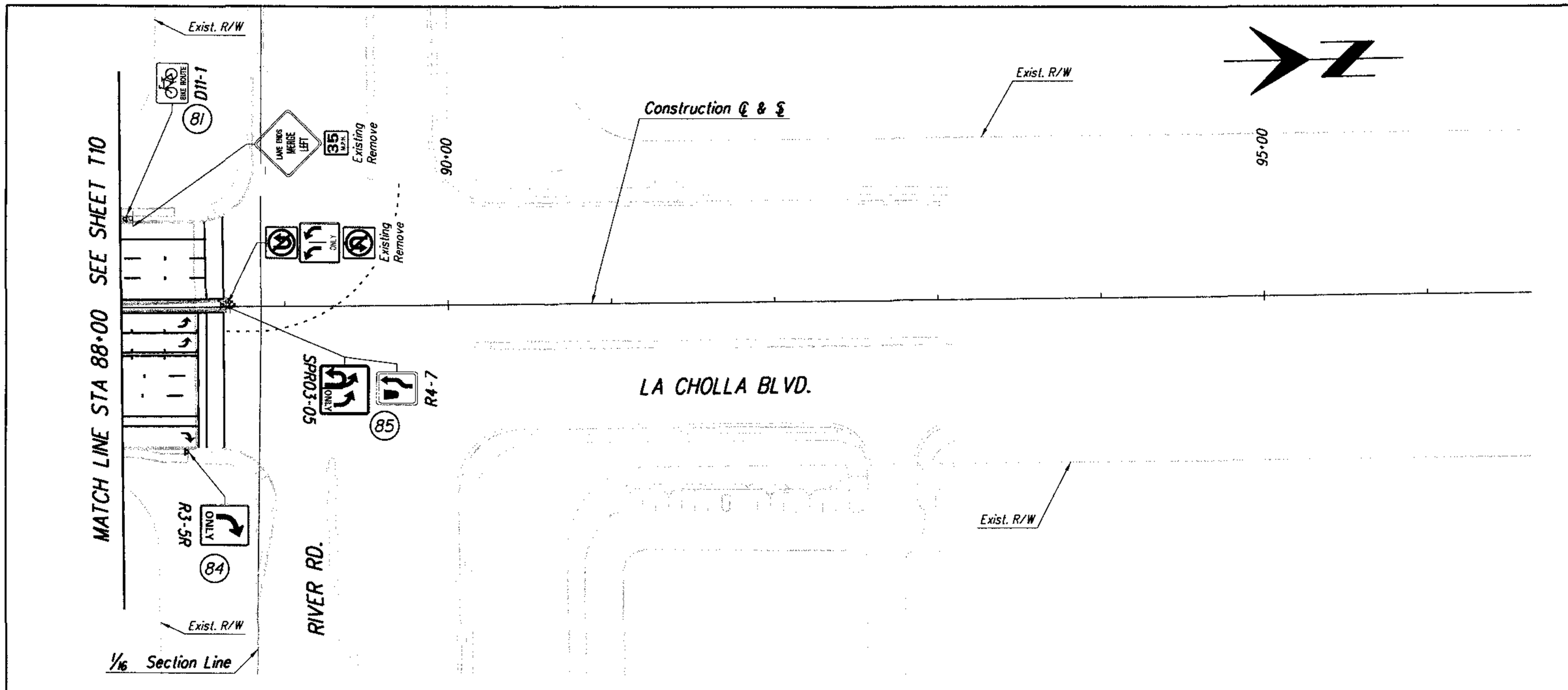

40 0 40 80

Arizona Blue Stake
1-800-STAKE-IT
1-800-782-5348
Call Two Working Days Before You Dig

Scales: Horiz. 1"=40' Verl. 1"=NA

Sheet T11 of T25

Page 161 of 356

Pima County Department of Transportation

Priscilla S. Cornelio, P.E., Director

No.	Revision Description	Engineer	Date

		Date
Designed	H. Schneider	July/2009
Drawn	A. Lebesmo, K. Monsen	July/2009
Checked	R. Brittain	July/2009
Proj. Engr.	H. Schneider	Aug/2009

Registered Professional Engineer (Civil) CERTIFICATE NO. 42774 HEIDI A. SCHNEIDER Date Signed 8-21-09 ARIZONA, U.S.A.

Expires 09-30-2011

HDR Engineering, Inc.
5210 East Williams Circle, Suite 530
Tucson, AZ 85711-4459
(520) 584-3600

LA CHOLLA BLVD.
RUTHRAUFF RD. TO RIVER RD.
SIGNING PLANS
FOR LA CHOLLA BLVD.

012145
0000000000059914
Pima_County_Dept._of_Transportation\PCDOT-La_Cholla_Blvd-Ruthrauff\13.00_CAD\Construction_Documents\Civil\21C-10.dgn

08\20\09 4:57:45 PM aledesma

Project • 4LCITR

012145
00000000059914
Pima_County_Dept_of_Transportation\PCDOT-La_Cholla_Blvd-Ruthrauff\13.00_CAD\Construction_Documents\Civil\21C-11.dgn

08\20\09 4:57:48 PM dledesma

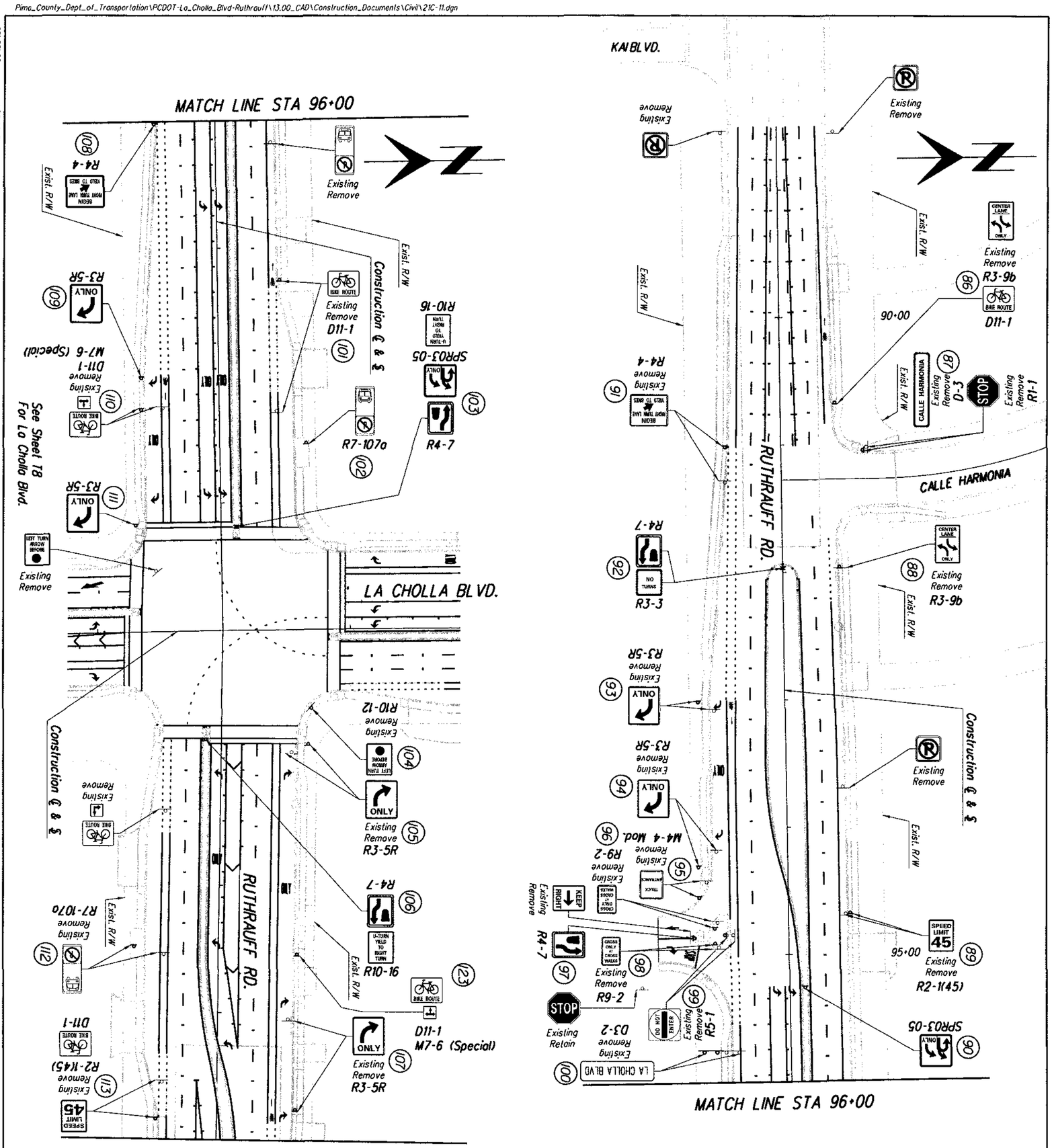

Project # 4LCITR

Scales: Horiz. 1"=40' Vert. 1"=NA

40 0 40 80

Sheet T12 of T125

Page 162 of 356

Arizona Blue Stake 1-800-STAKE-IT (Call two working days before you dig)

Pima County Department of Transportation

Priscilla S. Cornelio, P.E., Director

LA CHOLLA BLVD.
RUTHRAUFF RD. TO RIVER RD.
SIGNING PLANS
FOR RUTHRAUFF RD.

HDR Engineering, Inc.
5210 East Williams Circle, Suite 530
Tucson, AZ 85711-4459
(520) 584-3600

Last Revised 08-30-2011

No.	Revision Description	Engineer	Date

		Date
Designed	H. Schneider	July/2009
Drawn	A. Ledesma, K. Monsen	July/2009
Checked	R. Brittain	July/2009
Proj. Engr.	H. Schneider	Aug/2009

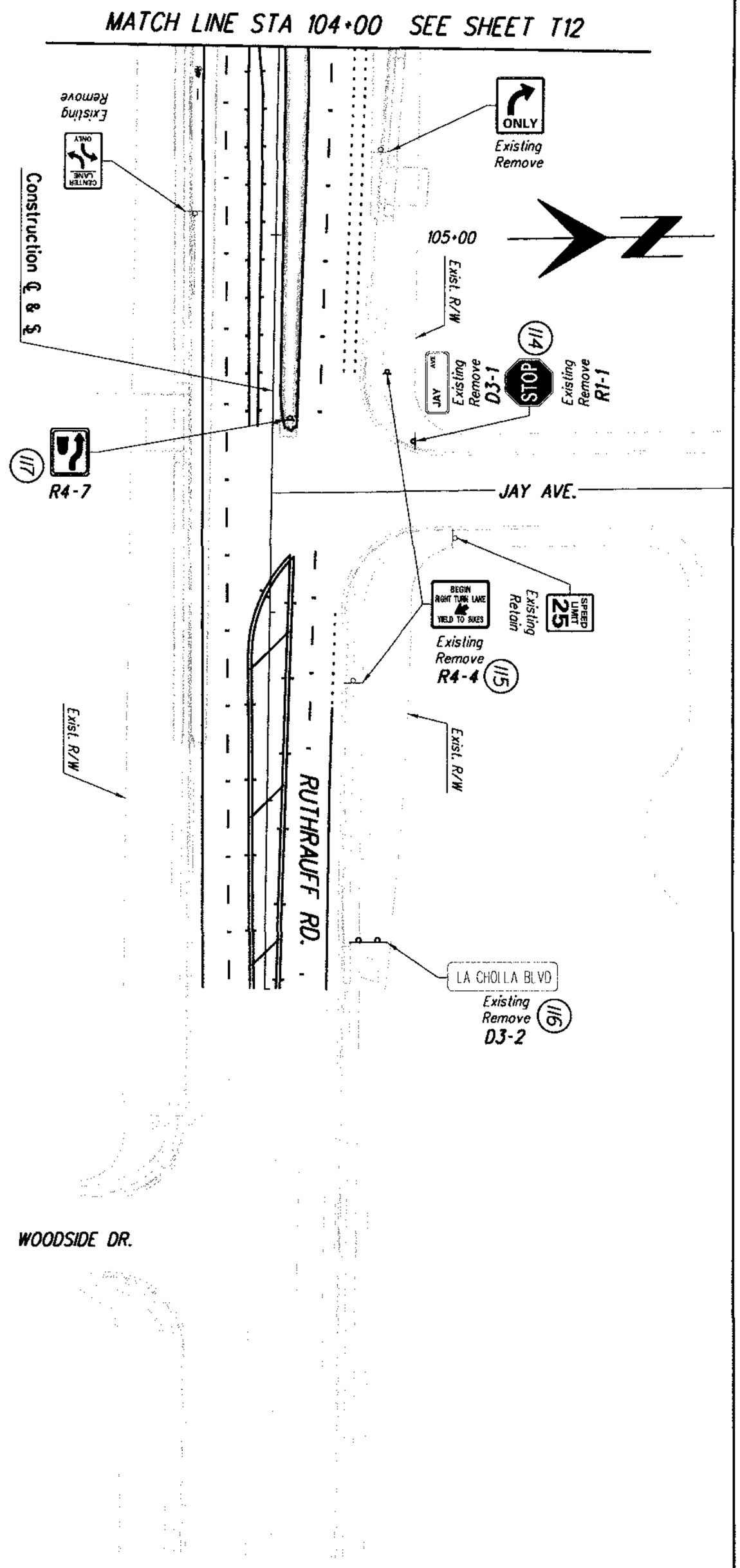

Scales: Horiz. 1"=40' Vert. 1"=NA

40 0 40 80

Arizona Blue Stake
1-800-STAKE-IT
1-800-782-5348
Call Two Working Days Before You Dig

Sheet T13 of T25

Page 163 of 356

08\20\09 4:57:54 PM aledesma

4LCITR

Project * 4LCITR

Pima County Department of Transportation

Priscilla S. Cornelio, P.E., Director

LA CHOLLA BLVD.
RUTHRAUFF RD. TO RIVER RD.
SIGNING PLANS
FOR RUTHRAUFF RD.

HDR

HDR Engineering, Inc.
5210 East Williams Circle, Suite 530
Tucson, AZ 85711-4459
(520) 584-3600

Expires 06-30-2011

No.	Revision Description	Engineer	Date

		Date
Designed	H. Schneider	July/2009
Drawn	A. Ledesma, K. Monsen	July/2009
Checked	R. Brittain	July/2009
Proj. Engr.	H. Schneider	Aug/2009

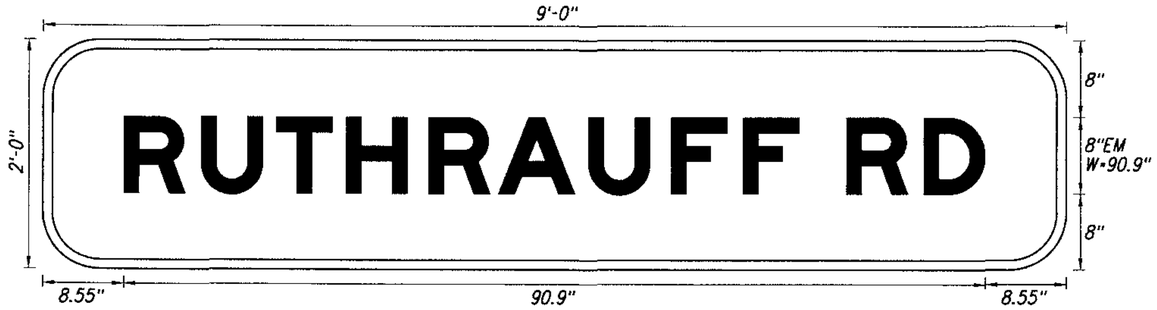

D3-2, Per ADOT Traffic Engineering Manual of Approved Signs
Border: TH=1", Panel: R=6", Background - Green (Refl.),
Legend & Border - White (Refl.), Text: E Mod

(13) Sta. 43+10, 35' Rt., La Cholla Blvd. ℄

(24) Sta. 54+34, 70' Lt., La Cholla Blvd. ℄

D3-1, Per PCDOT/COT Signing Manual
Border: N/A, Panel: R=1", Background - Green Type III,
Legend - White Type III, Text: C

(26) Sta. 55+62, 73' Lt., Ruthrauff Rd. ℄

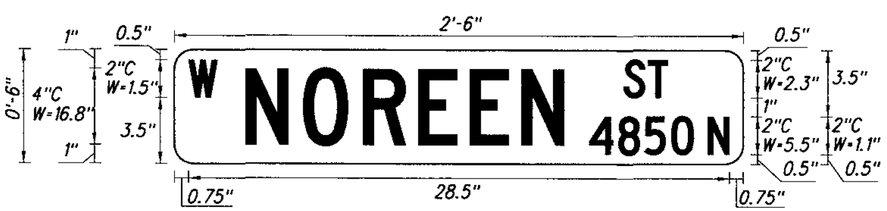

D3-1, Per PCDOT/COT Signing Manual
Border: N/A, Panel: R=1", Background - Green Type III,
Legend - White Type III, Text: C

(32) Sta. 53+83, 74' Rt., La Cholla Blvd. ℄

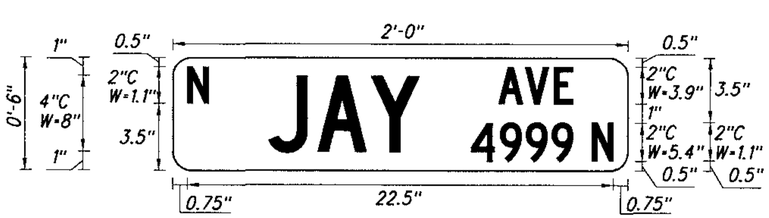

D3-1, Per PCDOT/COT Signing Manual
Border: N/A, Panel: R=1", Background - Green Type III,
Legend - White Type III, Text: C

(43) Sta. 61+68, 67' Rt., La Cholla Blvd. ℄

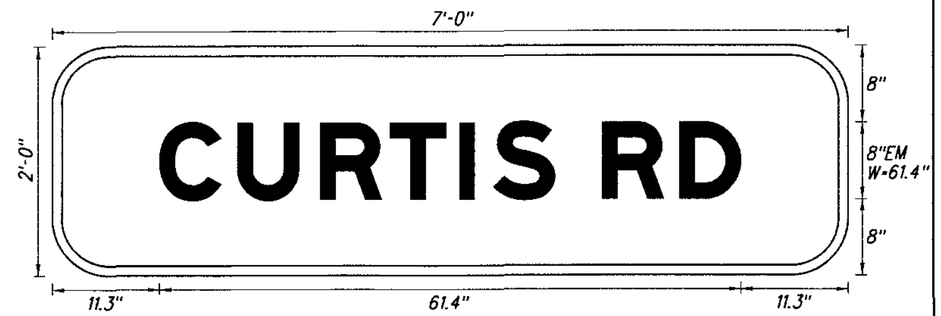

D3-2, Per ADOT Traffic Engineering Manual of Approved Signs
Border: TH=1", Panel: R=6", Background - Green (Refl.),
Legend & Border - White (Refl.), Text: E Mod

(48) Sta. 69+78, 67' Rt., La Cholla Blvd. ℄

(57) Sta. 78+03, 64' Lt., La Cholla Blvd. ℄

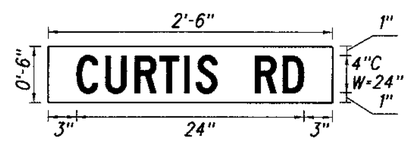

W16-8AZ, Per ADOT Traffic Engineering Manual of Approved Signs
Border: N/A, Panel: Square, Background-Yellow (Refl.),
Legend - Black (Non-Refl.), Text: C

(59) Sta. 72+40, 62' Rt., La Cholla Blvd. ℄

I-3, Per ADOT Traffic Engineering Manual of Approved Signs
Border: TH=0.5", Panel: R=1.5", Background - Green (Retro-Refl.),
Legend & Border - White (Retro-Refl.), Text: E Mod

(65) Sta. 78+89, 72' Rt., La Cholla Blvd. ℄

(67) Sta. 82+52, 67' Lt., La Cholla Blvd. ℄

Arizona Blue Stake
1-800-STAKE-IT
1-800-782-5348
Call two Working Days Before You Dig

Pima County Department of Transportation
Priscilla S. Cornelio, P.E., Director

No.	Revision Description	Engineer	Date

		Date
Designed	H. Schneider	July/2009
Drawn	J. Cruz	July/2009
Checked	R. Brittain	July/2009
Proj. Engr.	H. Schneider	July/2009

REGISTERED PROFESSIONAL ENGINEER (CIVIL) CERTIFICATE NO. 42274 HEIDI A. SCHNEIDER ARIZONA, U.S.A.
Expires 09-30-2011

HDR Engineering, Inc.
5210 East Williams Circle, Suite 530
Tucson, AZ 85711-4459
(520) 584-3600

LA CHOLLA BLVD.
RUTHRAUFF RD. TO RIVER RD.
SIGNING PLANS
FOR RUTHRAUFF RD.

Scales	NTS	Sheet	T14 of T25	Page	164 of 356

012145
00000000005914
Pima_County_Dept_of_Transportation\PCDOT-La_Cholla_Blvd-Ruthrauff\13.00_CAD\Construction_Documents\Civil\21C-13.dgn

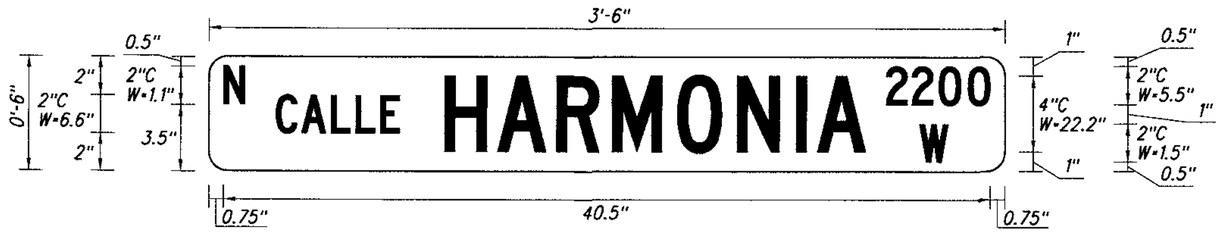

D3-1, Per PCDOT/COT Signing Manual
Border: N/A, Panel: R=1", Background - Green Type III,
Legend - White Type III, Text: C

(87) Sta. 91+05, 65' Lt., Ruthrauff Rd. ℄

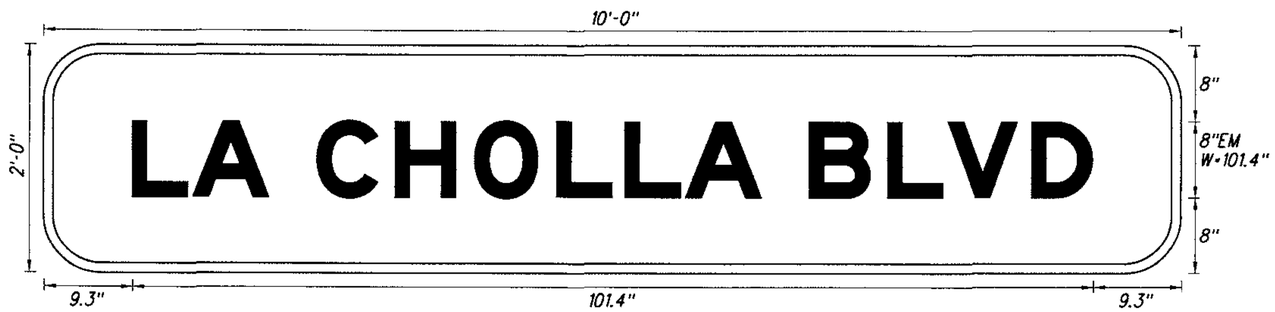

D3-2, Per ADOT Traffic Engineering Manual of Approved Signs
Border: TH=1", Panel: R=6", Background - Green (Refl.),
Legend & Border - White (Refl.), Text: E Mod

(100) Sta. 95+76, 63' Rt., Ruthrauff Rd. ℄

(116) Sta. 108+73, 55' Lt., Ruthrauff Rd. ℄

Arizona Blue Stake
1-800-STAKE-IT
1-800-782-5348
Call Two Working Days Before You Dig

Scales NTS | Sheet T15 of T25 | Page 165 of 356

Pima County Department of Transportation
Priscilla S. Cornelio, P.E., Director

No.	Revision Description	Engineer	Date

		Date
Designed	H. Schneider	July/2009
Drawn	J. Cruz	July/2009
Checked	R. Brittain	July/2009
Proj. Engr.	H. Schneider	Aug/2009

Registered Professional Engineer
CERTIFICATE NO. 42774
HEIDI A. SCHNEIDER
Date Signed 9-30-09
ARIZONA, U.S.A.
Expires 09-30-2011

HDR Engineering, Inc.
5210 East Williams Circle, Suite 530
Tucson, AZ 85711-4459
(520) 584-3600

LA CHOLLA BLVD.
RUTHRAUFF RD. TO RIVER RD.
SIGNING PLANS
FOR RUTHRAUFF RD.

012145
0000000000059914
Pima_County_Dept_of_Transportation\PCDOT-La_Cholla_Blvd-Ruthrauff\13.00_CAD\Construction_Documents\Civil\21C-14.dgn

08\20\09 4:58:03 PM aledesma 4LCITR Project • 4LCITR

SIGN SUMMARY SHEET

SIGN NO.	SIGN CODE	WORK: NEW	WORK: EXISTING: REPLACE PANEL	WORK: EXISTING: OVERLAY PANEL	WORK: EXISTING: RELOCATE	WORK: EXISTING: SEE REMARKS	WORK: OFFSET (FT)	PANEL: LEGEND	PANEL: WIDTH (FT)	PANEL: HEIGHT (FT)	PANEL: AREA (S.F.)	PANEL: TYPE	PANEL: MIN SHEETING TYPE	PANEL: BID ITEM NUMBER	GROUND MOUNTED: FOUNDATIONS	GROUND MOUNTED: POSTS: TYPE	GROUND MOUNTED: POSTS: TOTAL LENGTH (FT)	GROUND MOUNTED: NEW SLIPBASES	GROUND MOUNTED: RETROFIT SLIPBASES	GROUND MOUNTED: STRINGER TYPE	GROUND MOUNTED: STRINGER LENGTH (FT)	OVERHEAD: STRUCTURE TYPE	OVERHEAD: NUMBER OF LIGHTS	LOCATION / REMARKS
1	W6-2	X						DIVIDED ROAD BEGINS (SYMBOL)	3	3	9.0	RWM	3	6080015	2	P-1	12.0							LC 42+11
2	R5-1	X						DO NOT ENTER	2.5	2.5	6.3	RWM	3	6080015	1	P-1	10.5							LC 42+53
3	R5-1	X						DO NOT ENTER	2.5	2.5	6.3	RWM	3	6080015	1	P-1	10.5							LC 43+08
4	R3-9b	X						TWO-WAY LEFT TURN ONLY	2	3	6.0	RWM	3	6080015	1	P-1	10.5							LC 43+58
5	W11-8	X						EMERGENCY VEHICLES ENTERING ROADWAY	2.5	2.5	6.3	RWM	3	6080015	1	P-1	10.5							LC 45+18
6	R1-1	X						STOP	2.5	2.5	6.3	RWM	3	6080015	1	P-1	10.0							LC 46+58
7	R1-1	X						STOP	2.5	2.5	6.3	RWM	3	6080015	1	P-1	10.0							LC 46+36
8	R4-7	X						KEEP RIGHT (SYMBOL)	2	2.5	5.0	RWM	3	6080015	1	P-1	10.0							LC 47+25
	R3-3	X						NO TURNS	2	2	4.0	RWM	3	6080015										
9	W9-2	X						LANE ENDS MERGE LEFT	2.5	2.5	6.3	RWM	3	6080015	1	P-1	10.5							LC 47+27
10	R3-9b	X						TWO-WAY LEFT TURN ONLY	2	3	6.0	RWM	3	6080015	1	P-1	12.5							LC 40+49
	D11-1	X						BIKE ROUTE	2.5	2	5.0	F-DA	3	6080015										
11	R7-107a	X						NO PARKING (WITH TRANSIT LOGO)	1	2.5	2.5	RWM	3	6080015		U	14.0							LC 40+95
12	OM-3L	X						HAZARD MARKER (LEFT)	1	3	3.0	RWM	3	6080015		U	11.5							LC 44+45
13	D3-2	X						STREET NAME: RUTHRAUFF RD	9	2.00	18.0	F-DA	DG	6080020	2	P-1	11.5							LC 43+10

ABBREVIATIONS:
LC - LA CHOLLA BOULEVARD
RR - RUTHRAUFF ROAD

NOTES:

1. THE ENGINEER SHALL VERIFY POST LENGTHS AND ELEVATIONS.
2. THE ENGINEER MAY SHIFT A SIGN IN ORDER TO ACHIVE A MORE DESIRABLE LOCATION.
3. QUANTITIES ARE APROXIMATE AND FOR THE CONTRACTORS INFORMATION ONLY.

POST TYPES:
P-1: PERFORATED (SINGLE)
U: U-CHANNEL

Arizona Blue Stake
1-800-STAKE-IT
1-800-782-5348
Call Two Working Days Before You Dig

Designed	H. Schneider	July/2009
Drawn	H. Schneider, K. Monsen	July/2009
Checked	R. Britton	July/2009
Proj. Engr.	H. Schneider	Aug/2009

No.	Revision Description	Engineer	Date

Priscilla S. Cornelio, P.E., Director

Pima County Department of Transportation

HDR Engineering, Inc.
5210 East Williams Circle, Suite 530
Tucson, AZ 85711-4459
(520) 584-3600

LA CHOLLA BLVD.
RUTHRAUFF RD. TO RIVER RD.
SIGN SUMMARY SHEETS
FOR LA CHOLLA BLVD.

Scales | Sheet T16 of T25 | Page 166 of 356

012145
0000000005994
Pima_County_Dept_of_Transportation\PCDOT-La_Cholla_Blvd-Ruthrauff\13.00_CAD\Construction_Documents\Civil\21C-15.dgn

08\20\09 4:58:06 PM aledesma

Project • 4LCITR

SIGN SUMMARY SHEET

SIGN NO.	SIGN CODE	WORK: NEW	WORK: EXISTING: REPLACE PANEL	WORK: EXISTING: OVERLAY PANEL	WORK: EXISTING: RELOCATE	WORK: EXISTING: SEE REMARKS	WORK: OFFSET (FT)	PANEL: LEGEND	PANEL: WIDTH (FT)	PANEL: HEIGHT (FT)	PANEL: AREA (S.F.)	PANEL: TYPE	PANEL: MIN SHEETING TYPE	PANEL: BID ITEM NUMBER	GROUND MOUNTED: FOUNDATIONS	GROUND MOUNTED: POSTS: TYPE	GROUND MOUNTED: POSTS: TOTAL LENGTH (FT)	GROUND MOUNTED: NEW SLIPBASES	GROUND MOUNTED: RETROFIT SLIPBASES	GROUND MOUNTED: STRINGER TYPE	GROUND MOUNTED: STRINGER LENGTH (FT)	OVERHEAD: STRUCTURE TYPE	OVERHEAD: NUMBER OF LIGHTS	LOCATION / REMARKS
14	R4-4	X						BEGIN RIGHT TURN LANE (WITH ARROW) YIELD TO BIKES	3	2.5	7.5	RWM	3	6080015	1	P-1	10.0							LC 45+50
15	OM-3L	X						HAZARD MARKER (LEFT)	1	3	3.0	RWM	3	6080015		U	11.5							LC 47+13
16	D11-1	X						BIKE ROUTE	2.5	2	5.0	F-DA	3	6080015	1	P-1	12.5							LC 47+65
	M7-6	X						STRAIGHT AHEAD AND LEFT DIRECTIONAL ARROW (GREEN)	2	1.5	3.0	RWM	3	6080015										
	R3-5R	X						RIGHT TURN ONLY	2.5	3	7.5	RWM	3	6080015										
17	D11-1	X						BIKE ROUTE	2.5	2	5.0	F-DA	3	6080015	1	P-1	9.5							LC 48+56
18	W9-2	X						LANE ENDS MERGE LEFT	2.5	2.5	6.3	RWM	3	6080015	1	P-1	10.5							LC 48+89
19	R3-4	X						NO U-TURN (SYMBOL)	2	2	4.0	RWM	3	6080015	1	P-1	10.0							LC 49+25
	R4-7	X						KEEP RIGHT (SYMBOL)	2	2.5	5.0	RWM	3	6080015										
20	R3-5R	X						RIGHT TURN ONLY	2.5	3	7.5	RWM	3	6080015	1	P-1	10.5							LC 50+93
21	R4-7	X						KEEP RIGHT (SYMBOL)	2	2.5	5.0	RWM	3	6080015	1	P-1	10.0							LC 50+92
	SPR03-05	X						LEFT TURN/U-TURN ONLY & LEFT TURN ONLY	2.5	2.5	6.3	RWM	3	6080015										
	R10-16	X						U-TURN YIELD TO RIGHT TURN	2.5	3	7.5	RWM	3	6080015										
22	R3-5R	X						RIGHT TURN ONLY	2.5	3	7.5	RWM	3	6080015	1	P-1	10.5							LC 53+00
23	SPR03-05	X						LEFT TURN/U-TURN ONLY & LEFT TURN ONLY	2.5	2.5	6.3	RWM	3	6080015	1	P-1	10.0							LC 53+50
24	D3-2	X						STREET NAME: RUTHRAUFF RD	9	2.00	18.0	F-DA	DG	6080020	2	P-1	11.5							LC 54+34
25	R4-4	X						BEGIN RIGHT TURN LANE (WITH ARROW) YIELD TO BIKES	3	2.5	7.5	RWM	3	6080015	1	P-1	10.0							LC 54+00

ABBREVIATIONS:
LC - LA CHOLLA BOULEVARD
RR - RUTHRAUFF ROAD

NOTES:

1. THE ENGINEER SHALL VERIFY POST LENGTHS AND ELEVATIONS.
2. THE ENGINEER MAY SHIFT A SIGN IN ORDER TO ACHIVE A MORE DESIRABLE LOCATION.
3. QUANTITIES ARE APROXIMATE AND FOR THE CONTRACTORS INFORMATION ONLY.

POST TYPES:
P-1: PERFORATED (SINGLE)
U: U-CHANNEL

Arizona Blue Stake
1-800-STAKE-IT
1-800-782-5348
Call Two Working Days Before You Dig

Pima County Department of Transportation
Priscilla S. Cornelio, P.E., Director

Designed	H. Schneider	July 2009
Drawn	H. Schneider, K. Monsen	July 2009
Checked	R. Brittain	July 2009
Proj. Engr.	H. Schneider	Aug 2009

No.	Revision Description	Engineer	Date

Registered Professional Engineer (Civil) Certificate No. 42774 HEIDI A. SCHNEIDER Date Signed 8-31-09 Arizona, U.S.A. Expires 09-30-2011

HDR Engineering, Inc.
5210 East Williams Circle, Suite 530
Tucson, AZ 85711-4459
(520) 584-3600

LA CHOLLA BL VD.
RUTHRAUFF RD. TO RIVER RD.
SIGN SUMMARY SHEETS
FOR LA CHOLLA BL VD.

Scales | Sheet T17 of T25 | Page 167 of 356

012145
0000000000059914
Pima_County_Dept_of_Transportation\PC001-La_Cholla_Blvd-Ruthrauff\13.00_CAD\Construction_Documents\Civil\210-16.dgn

08\20\09 4:58:10 PM aledesma

Project # 4LCITR

SIGN SUMMARY SHEET

SIGN NO.	SIGN CODE	WORK: NEW	WORK: EXISTING: REPLACE PANEL	WORK: EXISTING: OVERLAY PANEL	WORK: EXISTING: RELOCATE	WORK: EXISTING: SEE REMARKS	WORK: OFFSET (FT)	PANEL: LEGEND	PANEL: WIDTH (FT)	PANEL: HEIGHT (FT)	PANEL: AREA (S.F.)	PANEL: TYPE	PANEL: MIN SHEETING TYPE	PANEL: BID ITEM NUMBER	GROUND MOUNTED: FOUNDATIONS	GROUND MOUNTED: POSTS: TYPE	GROUND MOUNTED: POSTS: TOTAL LENGTH (FT)	GROUND MOUNTED: NEW SLIPBASES	GROUND MOUNTED: RETROFIT SLIPBASES	GROUND MOUNTED: STRINGER TYPE	GROUND MOUNTED: STRINGER LENGTH (FT)	OVERHEAD: STRUCTURE TYPE	OVERHEAD: NUMBER OF LIGHTS	LOCATION / REMARKS
26	D3-1	X						STREET NAME: W CALLE NARCISO	3.5	0.5	1.8	F-DA	DG	6080020	1	P-1	10.5							LC 55+62
	R1-1	X						STOP	2.5	2.5	6.3	RWM	3	6080015										
27	R3-5R	X						RIGHT TURN ONLY	2.5	3	7.5	RWM	3	6080015	1	P-1	10.5							LC 49+16
28	R10-12	X						LEFT TURN YIELD ON GREEN	2	2.5	5.0	RWM	3	6080015										
29	R7-107a	X						NO PARKING (WITH TRANSIT LOGO)	1	2.5	2.5	RWM	3	6080015		U	14.0							LC 52+45
30	R2-1(25)	X						SPEED LIMIT(25)	2	2.5	5.0	RWM	3	6080015	1	P-1	10.0							LC 53+43
31	R6-1R	X						ONE WAY (RIGHT)	3	1	3.0	RWM	3	6080015	1	P-1	8.5							LC 53+70
32	D3-1	X						STREET NAME: W NOREEN ST	2.5	0.5	1.3	F-DA	DG	6080020	1	P-1	11.5							LC 53+83
	R6-1R	X						ONE WAY (RIGHT)	3	1	3.0	RWM	3	6080015										
	R1-1	X						STOP	2.5	2.5	6.3	RWM	3	6080015										
33	D11-1	X						BIKE ROUTE	2.5	2	5.0	F-DA	3	6080015	1	P-1	9.5							LC 54+04
34	R2-1(45)	X						SPEED LIMIT (45)	2	2.5	5.0	RWM	3	6080015	1	P-1	10.0							LC 54+42
35	W20-8	X						THRU TRAFFIC MERGE RIGHT	3	3	9.0	RWM	3	6080015	1	P-1	12.0							LC 55+00
36	R4-7	X						KEEP RIGHT (SYMBOL)	2	2.5	5.0	RWM	3	6080015	1	P-1	10.0							LC 55+48
37	W20-8	X						THRU TRAFFIC MERGE RIGHT	3	3	9.0	RWM	3	6080015	2	P-1	12.0							LC 57+65
38	R3-3	X						NO TURNS	2	1.5	3.0	RWM	3	6080015	1	P-1	10.0							LC 60+90
	R4-7	X						KEEP RIGHT (SYMBOL)	2	2.5	5.0	RWM	3	6080015										

ABBREVIATIONS:
LC - LA CHOLLA BOULEVARD
RR - RUTHRAUFF ROAD

NOTES:

1. THE ENGINEER SHALL VERIFY POST LENGTHS AND ELEVATIONS.
2. THE ENGINEER MAY SHIFT A SIGN IN ORDER TO ACHIVE A MORE DESIRABLE LOCATION.
3. QUANTITIES ARE APROXIMATE AND FOR THE CONTRACTORS INFORMATION ONLY.

POST TYPES:
P-1: PERFORATED (SINGLE)
U: U-CHANNEL

Arizona Blue Stake
1-800-STAKE-IT
1-800-782-5348
Call Two Working Days Before You Dig

Designed	H. Schneider		Date July/2009
Drawn	H. Schneider, K. Monsen		July/2009
Checked	R. Britton		July/2009
Proj. Engr.	H. Schneider		Aug/2009

No.	Revision Description	Engineer	Date

Priscilla S. Cornelio, P.E., Director

Pima County Department of Transportation

Registered Professional Engineer (Civil) Certificate No. 42774 HEDI A. SCHNEIDER Date Signed 8-21-09 ARIZONA, U.S.A. Expires 09-30-2011

HDR Engineering, Inc.
5210 East Williams Circle, Suite 330
Tucson, AZ 85711-4459
(520) 594-3600

LA CHOLLA BLVD.
RUTHRAUFF RD. TO RIVER RD.
SIGN SUMMARY SHEETS
FOR LA CHOLLA BLVD.

Scales | Sheet T18 of T25 | Page 168 of 356

012145
0000000000059914
Pima_County_Dept_of_Transportation\PCDOT-La_Cholla_Blvd-Ruthrauff\13.00_CAD\Construction_Documents\Civil\21C-17.dgn

08\20\09 4:58:14 PM aledesma

Project # 4LCITR

SIGN SUMMARY SHEET

SIGN NO.	SIGN CODE	WORK: NEW	WORK: EXISTING: REPLACE PANEL	WORK: EXISTING: OVERLAY PANEL	WORK: EXISTING: RELOCATE	WORK: EXISTING: SEE REMARKS	WORK: OFFSET (FT)	PANEL: LEGEND	PANEL: WIDTH (FT)	PANEL: HEIGHT (FT)	PANEL: AREA (S.F.)	PANEL: TYPE	PANEL: MIN SHEETING TYPE	PANEL: BID ITEM NUMBER	GROUND MOUNTED: FOUNDATIONS	GROUND MOUNTED: POSTS: TYPE	GROUND MOUNTED: POSTS: TOTAL LENGTH (FT)	GROUND MOUNTED: NEW SLIPBASES	GROUND MOUNTED: RETROFIT SLIPBASES	GROUND MOUNTED: STRINGER TYPE	GROUND MOUNTED: STRINGER LENGTH (FT)	OVERHEAD: STRUCTURE TYPE	OVERHEAD: NUMBER OF LIGHTS	LOCATION / REMARKS
39	R4-7	X						KEEP RIGHT (SYMBOL)	2	2.5	5.0	RWM	3	6080015	1	P-1	10.0							LC 62+02
40	R4-7	X						KEEP RIGHT (SYMBOL)	2	2.5	5.0	RWM	3	6080015	1	P-1	10.0							LC 56+23
	R3-3	X						NO TURNS	2	1.5	3.0	RWM	3	6080015										
41	D11-1	X						BIKE ROUTE	2.5	2	5.0	F-DA	3	6080015	1	P-1	9.5							LC 56+63
42	R2-1(25)	X						SPEED LIMIT (25)	2	2.5	5.0	RWM	3	6080015	1	P-1	10.0							LC 61+12
43	D3-1	X						STREET NAME: JAY AVE	2	0.5	1.0	F-DA	DG	6080020	1	P-1	10.5							LC 61+68
	R1-1	X						STOP	2.5	2.5	6.3	RWM	3	6080015										
44	R7-107a	X						NO PARKING (WITH TRANSIT LOGO)	1	2.5	2.5	RWM	3	6080015		U	14.0							LC 62+45
45	R7-107a	X						NO PARKING (WITH TRANSIT LOGO)	1	2.5	2.5	RWM	3	6080015		U	14.0							LC 64+03
46	D11-1	X						BIKE ROUTE	2.5	2	5.0	F-DA	3	6080015	1	P-1	9.5							LC 69+60
47	SPR03-17	X						U-TURN ONLY	2	1.5	3.0	RWM	3	6080015	1	P-1	10.0							LC 70+18
	R4-7	X						KEEP RIGHT (SYMBOL)	2	2.5	5.0	RWM	3	6080015										
48	D3-2	X						STREET NAME: CURTIS RD	7	2.00	14.0	F-DA	DG	6080020	1	P-1	8.0							LC 69+78
49	R4-7	X						KEEP RIGHT (SYMBOL)	2	2.5	5.0	RWM	3	6080015	1	P-1	10.0							LC 71+04
50	R2-1(45)	X						SPEED LIMIT (45)	2	2.5	5.0	RWM	3	6080015	1	P-1	10.0							LC 72+10
51	D11-1	X						BIKE ROUTE	2.5	2	5.0	F-DA	3	6080015	1	P-1	9.5							LC 74+72

ABBREVIATIONS:
LC - LA CHOLLA BOULEVARD
RR - RUTHRAUFF ROAD

NOTES:

1. THE ENGINEER SHALL VERIFY POST LENGTHS AND ELEVATIONS.
2. THE ENGINEER MAY SHIFT A SIGN IN ORDER TO ACHIVE A MORE DESIRABLE LOCATION.
3. QUANTITIES ARE APROXIMATE AND FOR THE CONTRACTORS INFORMATION ONLY.

POST TYPES:
P-1: PERFORATED (SINGLE)
U: U-CHANNEL

Arizona Blue Stake
1-800-STAKE-IT
1-800-782-5348
Call Two Working Days Before You Dig

Pima County Department of Transportation
Priscilla S. Cornelio, P.E., Director

Designed	H. Schneider	Date July/2009
Drawn	H. Schneider, K. Monsen	July/2009
Checked	R. Britton	July/2009
Proj. Engr.	H. Schneider	Aug/2009

No.	Revision Description	Engineer	Date

Registered Professional Engineer (Civil) CERTIFICATE NO. 42774 HEDI A. SCHNEIDER Date Signed 8-28-09 ARIZONA, U.S.A.
Expires 09-30-2011

HDR Engineering, Inc.
5210 East Williams Circle, Suite 530
Tucson, AZ 85711-4459
(520) 584-3600

LA CHOLLA BL VD.
RUTHRAUFF RD. TO RIVER RD.
SIGN SUMMARY SHEETS
FOR LA CHOLLA BL VD.

Scales | Sheet T19 of T25 | Page 169 of 356

012145
G0000000005991 4
Pima_County_Dept_of_Transportation\PCDOT-La_Cholla_Blvd-Ruthrauff\13.00_CAD\Construction_Documents\Civil\21C-18.dgn

08\20\09 4:58:18 PM aledesma

Project • 4LCITR

SIGN SUMMARY SHEET

SIGN NO.	SIGN CODE	WORK: NEW	WORK: EXISTING: REPLACE PANEL	WORK: EXISTING: OVERLAY PANEL	WORK: EXISTING: RELOCATE	WORK: EXISTING: SEE REMARKS	WORK: OFFSET (FT)	PANEL: LEGEND	PANEL: WIDTH (FT)	PANEL: HEIGHT (FT)	PANEL: AREA (S.F.)	PANEL: TYPE	PANEL: MIN SHEETING TYPE	PANEL: BID ITEM NUMBER	GROUND MOUNTED: FOUNDATIONS	GROUND MOUNTED: POSTS: TYPE	GROUND MOUNTED: POSTS: TOTAL LENGTH (FT)	GROUND MOUNTED: NEW SLIPBASES	GROUND MOUNTED: RETROFIT SLIPBASES	GROUND MOUNTED: STRINGER TYPE	GROUND MOUNTED: STRINGER LENGTH (FT)	OVERHEAD: STRUCTURE TYPE	OVERHEAD: NUMBER OF LIGHTS	LOCATION / REMARKS
52	R7-107a	X						NO PARKING (WITH TRANSIT LOGO)	1	2.5	2.5	RWM	3	6080015		U	14.0							LC 74+50
53	SPR03-12	X						LEFT TURN ONLY & RIGHT TURN ONLY	3	3	9.0	RWM	3	6080015	1	P-1	10.5							LC 75+39
54	R5-3	X						NO MOTOR VEHICLES	2	2	4.0	RWM	3	6080015	1	P-1	9.5							LC 76+38
55	R3-5R	X						RIGHT TURN ONLY	2.5	3	7.5	RWM	3	6080015	1	P-1	10.5							LC 76+64
56	R3-5R	X						RIGHT TURN ONLY	2.5	3	7.5	RWM	3	6080015	1	P-1	10.5							LC 77+25
57	D3-2	X						STREET NAME: CURTIS RD	7	2.00	14.0	F-DA	DG	6080020	2	P-1	10.5							LC 78+02
58	R4-4	X						BEGIN RIGHT TURN LANE (WITH ARROW) TO BIKES	3	2.5	7.5	RWM	3	6080015	1	P-1	10.0							LC 78+41
59	W2-2	X						SIDE ROAD (PERPENDICULAR) (SYMBOL)	2.5	2.5	6.3	RWM	3	6080015	2	P-1	9.5							LC 72+39
	W16-8AZ	X						STREET NAME: CURTIS RD	7	2.00	14.0	F-DA	DG	6080020										
60	R7-107a	X						NO PARKING (WITH TRANSIT LOGO)	1	2.5	2.5	RWM	3	6080015		U	14.0							LC 74+35
61	R4-7	X						KEEP RIGHT (SYMBOL)	2	2.5	5.0	RWM	3	6080015	1	P-1	10.0							LC 75+35
62	W1-8	X						CHEVRON ALIGNMENT	1.5	2	3.0	RWM	3	6080015	1	P-1	9.5							LC 75+82
	W1-7	X						LARGE ARROW (DOUBLE ARROWHEAD)	4	2	8.0	RWM	3	6080015	2	P-1	9.5							
	W1-8	X						CHEVRON ALIGNMENT	1.5	2	3.0	RWM	3	6080015	1	P-1	9.5							
63	W8-13	X						BRIDGE ICES BEFORE ROAD	2.5	2.5	6.3	RWM	3	6080015	1	P-1	9.5							LC 76+91
	D11-1	X						BIKE ROUTE	2.5	2	5.0	F-DA	3	6080015										

ABBREVIATIONS:
LC - LA CHOLLA BOULEVARD
RR - RUTHRAUFF ROAD

NOTES:

1. THE ENGINEER SHALL VERIFY POST LENGTHS AND ELEVATIONS.
2. THE ENGINEER MAY SHIFT A SIGN IN ORDER TO ACHIVE A MORE DESIRABLE LOCATION.
3. QUANTITIES ARE APROXIMATE AND FOR THE CONTRACTORS INFORMATION ONLY.

POST TYPES:
P-1: PERFORATED (SINGLE)
U: U-CHANNEL

Arizona Blue Stake
1-800-STAKE-IT
1-800-782-5348
Call Two Working Days Before You Dig

Priscilla S. Cornelio, P.E., Director
Pima County Department of Transportation

Designed	H. Schneider	July/2009
Drawn	H. Schneider, K. Monsen	July/2009
Checked	R. Britton	July/2009
Proj. Engr.	H. Schneider	Aug/2009

No.	Revision Description	Engineer	Date

Registered Professional Engineer (Civil) CERTIFICATE NO. 42274 HEIDI A. SCHNEIDER ARIZONA, U.S.A.
Expires 09-30-2011

HDR Engineering, Inc.
5210 East Williams Circle, Suite 530
Tucson, AZ 85711-4459
(520) 584-3600

LA CHOLLA BLVD.
RUTHRAUFF RD. TO RIVER RD.
SIGN SUMMARY SHEETS
FOR LA CHOLLA BLVD.

Scales | Sheet T20 of T25 | Page 170 of 356

012145
0000000000059914
Pima_County_Dept_of_Transportation\PCDOT-La_Cholla_Blvd-Ruthrauff\13.00_CAD\Construction_Documents\Civil\21C-18.dgn

08\20\09 4:58:22 PM oledesmo

Project • 4LCITR

SIGN SUMMARY SHEET

SIGN NO.	SIGN CODE	WORK: NEW	WORK: EXISTING: REPLACE PANEL	WORK: EXISTING: OVERLAY PANEL	WORK: EXISTING: RELOCATE	WORK: EXISTING: SEE REMARKS	WORK: OFFSET (FT)	PANEL: LEGEND	PANEL: WIDTH (FT)	PANEL: HEIGHT (FT)	PANEL: AREA (S.F.)	PANEL: TYPE	PANEL: MIN SHEETING TYPE	PANEL: BID ITEM NUMBER	GROUND MOUNTED: FOUNDATIONS	GROUND MOUNTED: POSTS: TYPE	GROUND MOUNTED: POSTS: TOTAL LENGTH (FT)	GROUND MOUNTED: NEW SLIPBASES	GROUND MOUNTED: RETROFIT SLIPBASES	GROUND MOUNTED: STRINGER TYPE	GROUND MOUNTED: STRINGER LENGTH (FT)	OVERHEAD: STRUCTURE TYPE	OVERHEAD: NUMBER OF LIGHTS	LOCATION / REMARKS
64	R8-3a	X						NO PARKING (SYMBOL)	2	2	4.0	RWM	3	6080015	1	P-1	9.5							LC 77+65
	R8-3d	X						ON BRIDGE (SUPPLEMENTAL PLAQUE)	2	1.5	3.0	RWM	3	6080015										
65	I-3	X						RIVER NAME: RILLITO RIVER	3	1.50	4.5	F-DA	DG	6080020	2	P-1	10.5							LC 77+89
66	R8-3a	X						NO PARKING (SYMBOL)	2	2	4.0	RWM	3	6080015	1	P-1	9.5							LC 82+40
	R8-3d	X						ON BRIDGE (SUPPLEMENTAL PLAQUE)	2	1.5	3.0	RWM	3	6080015										
67	I-3	X						RIVER NAME: RILLITO RIVER	3	1.50	4.5	F-DA	DG	6080020	2	P-1	10.5							LC 82+52
68	W8-13	X						BRIDGE ICES BEFORE ROAD	2.5	2.5	6.3	RWM	3	6080015	1	P-1	9.5							LC 84+01
69	R7-107a	X						NO PARKING WITH TRANSIT LOGO	1	2.5	2.5	RWM	3	6080015		U	14.0							LC 85+72
70	R3-2	X						NO LEFT TURN (SYMBOL)	2	2	4.0	RWM	3	6080015	1	P-1	9.5							LC 86+57
71	R5-3	X						NO MOTOR VEHICLES	2	2	4.0	RWM	3	6080015	1	P-1	9.5							LC 82+35
72	R1-1	X						STOP	2.5	2.5	6.3	RWM	3	6080015	1	P-1	11.5							LC 83+14
	R3-5R	X						RIGHT TURN ONLY	2.5	3	7.5	RWM	3	6080015										
73	R4-4	X						BEGIN RIGHT TURN LANE (WITH ARROW) YIELD TO BIKES	3	2.5	7.5	RWM	3	6080015	1	P-1	10.0							LC 83+34
74	R4-7	X						KEEP RIGHT (SYMBOL)	2	2.5	5.0	RWM	3	6080015	1	P-1	10.0							LC 83+33
75	R5-1	X						DO NOT ENTER	2.5	2.5	6.3	RWM	3	6080015	1	P-1	10.0							LC 82+96
	R6-1R	X						ONE WAY	3	1	3.0	RWM	3	6080015										

ABBREVIATIONS:
LC - LA CHOLLA BOULEVARD
RR - RUTHRAUFF ROAD

NOTES:

1. THE ENGINEER SHALL VERIFY POST LENGTHS AND ELEVATIONS.
2. THE ENGINEER MAY SHIFT A SIGN IN ORDER TO ACHIVE A MORE DESIRABLE LOCATION.
3. QUANTITIES ARE APROXIMATE AND FOR THE CONTRACTORS INFORMATION ONLY.

POST TYPES:

P-1: PERFORATED (SINGLE)

U: U-CHANNEL

Arizona Blue Stake
1-800-STAKE-IT
1-800-782-5348
Call Two Working Days Before You Dig

Priscilla S. Cornelio, P.E., Director

Pima County Department of Transportation

		Date
Designed	H. Schneider	July/2009
Drawn	H. Schneider, K. Monsen	July/2009
Checked	R. Britton	July/2009
Proj. Engr.	H. Schneider	Aug/2009

No.	Revision Description	Engineer	Date

REGISTERED PROFESSIONAL ENGINEER CERTIFICATE NO. 42774 HEIDI A. SCHNEIDER ARIZONA, U.S.A. Expires 09-30-2011

HDR Engineering, Inc.
5210 East Williams Circle, Suite 530
Tucson, AZ 85711-4459
(520) 584-3600

LA CHOLLA BLVD.
RUTHRAUFF RD. TO RIVER RD.
SIGN SUMMARY SHEETS
FOR LA CHOLLA BLVD.

Scales | Sheet T21 of T25 | Page 171 of 356

012145
0000000000059914
Pima_County_Dept_of_Transportation\PCDOT-La_Cholla_Blvd-Ruthrauff\13.00_CAD\Construction_Documents\Civil\21C-20.dgn

08\20\09 4:58:26 PM aledesma

Project • 4LCITR

SIGN SUMMARY SHEET

SIGN NO.	SIGN CODE	WORK: NEW	WORK: EXISTING: REPLACE PANEL	WORK: EXISTING: OVERLAY PANEL	WORK: EXISTING: RELOCATE	WORK: EXISTING: SEE REMARKS	WORK: OFFSET (FT)	PANEL: LEGEND	PANEL: WIDTH (FT)	PANEL: HEIGHT (FT)	PANEL: AREA (S.F.)	PANEL: TYPE	PANEL: MIN SHEETING TYPE	PANEL: BID ITEM NUMBER	GROUND MOUNTED: FOUNDATIONS	GROUND MOUNTED: POSTS: TYPE	GROUND MOUNTED: POSTS: TOTAL LENGTH (FT)	GROUND MOUNTED: NEW SLIPBASES	GROUND MOUNTED: RETROFIT SLIPBASES	GROUND MOUNTED: STRINGER TYPE	GROUND MOUNTED: STRINGER LENGTH (FT)	OVERHEAD: STRUCTURE TYPE	OVERHEAD: NUMBER OF LIGHTS	LOCATION / REMARKS
76	R3-5R	X						RIGHT TURN ONLY	2.5	3	7.5	RWM	3	6080015	1	P-1	10.5							LC 86+23
77	R1-1	X						STOP	2.5	2.5	6.3	RWM	3	6080015	1	P-1	11.5							LC 86+11
	R3-5R	X						RIGHT TURN ONLY	2.5	3	7.5	RWM	3	6080015										
78	R6-1R	X						ONE WAY	3	1	3.0	RWM	3	6080015	1	P-1	8.5							LC 86+11
79	R6-1R	X						ONE WAY	3	1	3.0	RWM	3	6080015	1	P-1	8.5							LC 86+68
80	SPR03-05	X						LEFT TURN/U-TURN ONLY & LEFT TURN ONLY	2.5	2.5	6.3	RWM	3	6080015	1	P-1	10.0							LC 87+00
81	D11-1	X						BIKE ROUTE	2.5	2	5.0	F-DA	3	6080015	1	P-1	9.5							LC 88+04
82	W2-2	X						SIDE ROAD (PERPENDICULAR) (SYMBOL)	2.5	2.5	6.3	RWM	3	6080015	2	P-1	9.5							LC 79+37
	W16-8AZ	X						STREET NAME: CURTIS RD	7	2.00	14.0	F-DA	DG	6080020										
84	R3-5R	X						RIGHT TURN ONLY	2.5	3	7.5	RWM	3	6080015	1	P-1	10.5							LC 88+60
85	SPR03-05	X						LEFT TURN/U-TURN ONLY & LEFT TURN ONLY	2.5	2.5	6.3	RWM	3	6080015	1	P-1	10.0							LC 88+74
	R4-7	X						KEEP RIGHT (SYMBOL)	2	3	5.0	RWM	3	6080015										
86	D11-1	X						BIKE ROUTE	2.5	2	5.0	F-DA	3	6080015	1	P-1	9.5							RR 90+69
87	D3-1	X						STREET NAME: N CALLE HARMONIA	3.5	0.5	1.8	F-DA	DG	6080020	1	P-1	10.5							RR 91+05
	R1-1	X						STOP	2.5	2.5	6.3	RWM	3	6080015										
88	R3-9b	X						TWO-WAY LEFT TURN ONLY	2	3	6.0	RWM	3	6080015	1	P-1	10.5							RR 91+98

ABBREVIATIONS:
LC - LA CHOLLA BOULEVARD
RR - RUTHRAUFF ROAD

NOTES:

1. THE ENGINEER SHALL VERIFY POST LENGTHS AND ELEVATIONS.
2. THE ENGINEER MAY SHIFT A SIGN IN ORDER TO ACHIVE A MORE DESIRABLE LOCATION.
3. QUANTITIES ARE APROXIMATE AND FOR THE CONTRACTORS INFORMATION ONLY.

POST TYPES:

P-1: PERFORATED (SINGLE)

U: U-CHANNEL

Arizona Blue Stake
1-800-STAKE-IT
1-800-782-5348
Call Two Working Days Before You Dig

Priscilla S. Cornelio, P.E., Director

Pima County Department of Transportation

		Date
Designed	H. Schneider	July/2009
Drawn	H. Schneider, K. Monsen	July/2009
Checked	R. Britton	July/2009
Proj. Engr.	H. Schneider	Aug/2009

No.	Revision Description	Engineer	Date

REGISTERED PROFESSIONAL ENGINEER (CIVIL) CERTIFICATE NO. 42774 HEIDA SCHNEIDER ARIZONA, U.S.A.
Expires 09-30-2011

HDR Engineering, Inc.
5210 East Williams Circle, Suite 530
Tucson, AZ 85711-4459
(520) 584-3600

LA CHOLLA BLVD.
RUTHRAUFF RD. TO RIVER RD.
SIGN SUMMARY SHEETS
FOR LA CHOLLA BLVD.

Scales | Sheet T22 of T25 | Page 172 of 356

Project • 4LCITR

012145
0000000000059914
Pima_County_Dept_of_Transportation\PCDOT-La_Cholla_Blvd-Ruthrauff\13.00_CAD\Construction_Documents\Civil\2IC-21.dgn

08\20\09 4:58:30 PM oledesma

SIGN SUMMARY SHEET

SIGN NO.	SIGN CODE	WORK: NEW	WORK: EXISTING: REPLACE PANEL	WORK: EXISTING: OVERLAY PANEL	WORK: EXISTING: RELOCATE	WORK: EXISTING: SEE REMARKS	WORK: OFFSET (FT)	PANEL: LEGEND	PANEL: WIDTH (FT)	PANEL: HEIGHT (FT)	PANEL: AREA (S.F.)	PANEL: TYPE	PANEL: MIN SHEETING TYPE	PANEL: BID ITEM NUMBER	GROUND MOUNTED: FOUNDATIONS	GROUND MOUNTED: POSTS: TYPE	GROUND MOUNTED: POSTS: TOTAL LENGTH (FT)	GROUND MOUNTED: NEW SLIPBASES	GROUND MOUNTED: RETROFIT SLIPBASES	GROUND MOUNTED: STRINGER TYPE	GROUND MOUNTED: STRINGER LENGTH (FT)	OVERHEAD: STRUCTURE TYPE	OVERHEAD: NUMBER OF LIGHTS	LOCATION / REMARKS
89	R2-1(45)	X						SPEED LIMIT (45)	2	2.5	5.0	RWM	3	6080015	1	P-1	10.0							RR 94+69
90	SPR03-05	X						LEFT TURN/U-TURN ONLY & LEFT TURN ONLY	2.5	2.5	6.3	RWM	3	6080015	1	P-1	10.0							RR 95+25
91	R4-4	X						BEGIN RIGHT TURN LANE (WITH ARROW) YIELD TO BIKES	3	2.5	7.5	RWM	3	6080015	1	P-1	10.0							RR 91+00
92	R4-7	X						KEEP RIGHT (SYMBOL)	2	2.5	5.0	RWM	3	6080015	1	P-1	10.0							RR 91+94
	R3-3	X						NO TURNS	2	1.5	3.0	RWM	3	6080015										
93	R3-5R	X						RIGHT TURN ONLY	2.5	3	7.5	RWM	3	6080015	1	P-1	10.5							RR 93+00
94	R3-5R	X						RIGHT TURN ONLY	2.5	3	7.5	RWM	3	6080015	1	P-1	10.5							RR 94+29
95	M4-4 MOD	X						TRUCK ENTRANCE	2	1.5	3.0	RWM	3	6080015	1	P-1	10.0							RR 94+53
96	R9-2	X						CROSS ONLY AT CROSSWALKS	1	1.5	1.5	RWM	3	6080015	1	P-1	9.0							RR 94+78
97	R4-7	X						KEEP RIGHT (SYMBOL)	2	2.5	5.0	RWM	3	6080015	1	P-1	10.0							RR 94+86
98	R9-2	X						CROSS ONLY AT CROSSWALKS	1	1.5	1.5	RWM	3	6080015	1	P-1	9.0							RR 94+92
99	R5-1	X						DO NOT ENTER	2.5	2.5	6.3	RWM	3	6080015	1	P-1	10.5							RR 94+84
100	D3-2	X						STREET NAME: LA CHOLLA BLVD	10	2.00	20.0	F-DA	DG	6080020	2	P-1	10.5							RR 95+75
101	D11-1	X						BIKE ROUTE	2.5	2	5.0	F-DA	3	6080015	1	P-1	9.5							RR 97+27
102	R7-107a	X						NO PARKING WITH TRANSIT LOGO	1	2.5	2.5	RWM	3	6080015		U	14.0							RR 98+55

ABBREVIATIONS:
LC - LA CHOLLA BOULEVARD
RR - RUTHRAUFF ROAD

NOTES:

1. THE ENGINEER SHALL VERIFY POST LENGTHS AND ELEVATIONS.
2. THE ENGINEER MAY SHIFT A SIGN IN ORDER TO ACHIVE A MORE DESIRABLE LOCATION.
3. QUANTITIES ARE APROXIMATE AND FOR THE CONTRACTORS INFORMATION ONLY.

POST TYPES:

P-1: PERFORATED (SINGLE)

U: U-CHANNEL

Arizona Blue Stake
1-800-STAKE-IT
1-800-782-5348
Call Two Working Days Before You Dig

Priscilla S. Cornelio, P.E., Director

Designed	H. Schneider	July/2009
Drawn	H. Schneider, K. Monsen	July/2009
Checked	R. Britcoh	July/2009
Proj. Engr.	H. Schneider	Aug/2009

No.	Revision Description	Engineer	Date

Registered Professional Engineer (Civil) CERTIFICATE NO. 42774 HEDI A. SCHNEIDER Date Signed 8-3-09 ARIZONA, U.S.A.
Expires 09-30-2011

HDR Engineering, Inc.
5210 East Williams Circle, Suite 530
Tucson, AZ 85711-4459
(520) 584-3600

Pima County Department of Transportation

LA CHOLLA BLVD.
RUTHRAUFF RD. TO RIVER RD.
SIGN SUMMARY SHEETS
FOR LA CHOLLA BLVD.

Scales | Sheet T23 of T25 | Page 173 of 356

012145
00000000005991 4
Pima_County_Dept_of_Transportation\PCDOT-La_Cholla_Blvd-Ruthrauff\13.00_CAD\Construction_Documents\Civil\21C-22.dgn

08\20\09 4:58:34 PM aledesma

Project • 4LCITR

SIGN SUMMARY SHEET

SIGN NO.	SIGN CODE	WORK: NEW	WORK: EXISTING: REPLACE PANEL	WORK: EXISTING: OVERLAY PANEL	WORK: EXISTING: RELOCATE	WORK: EXISTING: SEE REMARKS	WORK: OFFSET (FT)	PANEL: LEGEND	PANEL: WIDTH (FT)	PANEL: HEIGHT (FT)	PANEL: AREA (S.F.)	PANEL: TYPE	PANEL: MIN SHEETING TYPE	PANEL: BID ITEM NUMBER	GROUND MOUNTED: FOUNDATIONS	GROUND MOUNTED: POSTS: TYPE	GROUND MOUNTED: POSTS: TOTAL LENGTH (FT)	GROUND MOUNTED: NEW SLIPBASES	GROUND MOUNTED: RETROFIT SLIPBASES	GROUND MOUNTED: STRINGER TYPE	GROUND MOUNTED: STRINGER LENGTH (FT)	OVERHEAD: STRUCTURE TYPE	OVERHEAD: NUMBER OF LIGHTS	LOCATION / REMARKS
103	SPR03-05	X						LEFT TURN/U-TURN ONLY & LEFT TURN ONLY	2.5	2.5	6.3	RWM	3	6080015	1	P-1	10.0							RR 99+21
	R4-7	X						KEEP RIGHT (SYMBOL)	2	2.5	5.0	RWM	3	6080015										
	R10-16	X						U-TURN YIELD TO RIGHT TURN	2.5	3	7.5	RWM	3	6080015										
104	R10-12	X						LEFT TURN YIELD ON GREEN	2	2.5	5.0	RWM	3	6080015	1	P-1	10.0							RR 100+61
105	R3-5R	X						RIGHT TURN ONLY	2.5	3	7.5	RWM	3	6080015	1	P-1	10.5							RR 100+91
106	R4-7	X						KEEP RIGHT (SYMBOL)	2	2.5	5.0	RWM	3	6080015	1	P-1	10.0							RR 100+81
	R10-16	X						U-TURN YIELD TO RIGHT TURN	2.5	3	7.5	RWM	3	6080015										
107	R3-5R	X						RIGHT TURN ONLY	2.5	3	7.5	RWM	3	6080015	1	P-1	10.5							RR 103+77
108	R4-4	X						BEGIN RIGHT TURN LANE (WITH ARROW) YIELD TO BIKES	3	2.5	7.5	RWM	3	6080015	1	P-1	10.0							RR 96+01
109	R3-5R	X						RIGHT TURN ONLY	2.5	3	7.5	RWM	3	6080015	1	P-1	10.5							RR 98+00
110	D11-1	X						BIKE ROUTE	2.5	2	5.0	F-DA	3	6080015	1	P-1	12.5							RR 98+25
	M7-6 (SPL)	X						STRAIGHT AHEAD & RIGHT & LEFT DIRECTIONAL ARROW (GREEN)	2	1.5	3.0	RWM	3	6080015										
111	R3-5R	X						RIGHT TURN ONLY	2.5	3	7.5	RWM	3	6080015	1	P-1	10.5							RR 99+16
112	R7-107a	X						NO PARKING (WITH TRANSIT LOGO)	1	2.5	2.5	RWM	3	6080015		U	14.0							RR 102+54
113	R2-1(45)	X						SPEED LIMIT (45)	2	2.5	5.0	RWM	3	6080015	1	P-1	10.5							RR 103+83
	D11-1	X						BIKE ROUTE	2.5	2	5.0	F-DA	3	6080015										

ABBREVIATIONS:
LC - LA CHOLLA BOULEVARD
RR - RUTHRAUFF ROAD

NOTES:

1. THE ENGINEER SHALL VERIFY POST LENGTHS AND ELEVATIONS.
2. THE ENGINEER MAY SHIFT A SIGN IN ORDER TO ACHIVE A MORE DESIRABLE LOCATION.
3. QUANTITIES ARE APROXIMATE AND FOR THE CONTRACTORS INFORMATION ONLY.

POST TYPES:

P-1: PERFORATED (SINGLE)

U: U-CHANNEL

Arizona Blue Stake
1-800-STAKE-IT
1-800-782-5348
Call Two Working Days Before You Dig

Pima County Department of Transportation
Priscilla S. Cornelio, P.E., Director

Designed	H. Schneider	July/2009
Drawn	H. Schneider, K. Monsen	July/2009
Checked	R. Britton	July/2009
Proj. Engr.	H. Schneider	Aug/2009

No.	Revision Description	Engineer	Date

HDR Engineering, Inc.
5210 East Williams Circle, Suite 530
Tucson, AZ 85711-4459
(520) 584-3600

LA CHOLLA BLVD.
RUTHRAUFF RD. TO RIVER RD.
SIGN SUMMARY SHEETS
FOR LA CHOLLA BLVD.

Scales | Sheet T24 of T25 | Page 174 of 356

Project • 4LCITR

08\20\09 4:58:37 PM aledesma

012145
0000000000059914
Pima_County_Dept_of_Transportation\PCDOT-La_Cholla_Blvd-Ruthrauff\3.00_CAD\Construction_Documents\Civil\21C-23.dgn

SIGN SUMMARY SHEET

SIGN NO.	SIGN CODE	WORK: NEW	WORK: EXISTING: REPLACE PANEL	WORK: EXISTING: OVERLAY PANEL	WORK: EXISTING: RELOCATE	WORK: EXISTING: SEE REMARKS	WORK: OFFSET (FT)	PANEL: LEGEND	PANEL: WIDTH (FT)	PANEL: HEIGHT (FT)	PANEL: AREA (S.F.)	PANEL: TYPE	PANEL: MIN SHEETING TYPE	PANEL: BID ITEM NUMBER	GROUND MOUNTED: FOUNDATIONS	GROUND MOUNTED: POSTS: TYPE	GROUND MOUNTED: POSTS: TOTAL LENGTH (FT)	GROUND MOUNTED: NEW SLIPBASES	GROUND MOUNTED: RETROFIT SLIPBASES	GROUND MOUNTED: STRINGER TYPE	GROUND MOUNTED: STRINGER LENGTH (FT)	OVERHEAD: STRUCTURE TYPE	OVERHEAD: NUMBER OF LIGHTS	LOCATION / REMARKS
114	D3-1	X						STREET NAME: JAY AVE	2	0.5	1.0	F-DA	DG	6080020	1	P-1	10.5							RR 106+09
	R1-1	X						STOP	2.5	2.5	6.3	RWM	3	6080015										
115	R4-4	X						BEGIN RIGHT TURN LANE (WITH ARROW) YIELD TO BIKES	3	2.5	7.5	RWM	3	6080015	1	P-1	10.0							RR 105+73
116	D3-2	X						STREET NAME: LA CHOLLA BLVD	10	2.00	20.0	F-DA	DG	6080020	2	P-1	10.5							RR 108+75
117	R4-7	X						KEEP RIGHT (SYMBOL)	2	2.5	5.0	RWM	3	6080015	1	P-1	10.0							RR 105+98
118	R7-1	X						NO PARKING ANYTIME (WITH TWO-WAY ARROW)	1	1.5	1.5	RWM	3	6080015	1	P-1	9.0							LC 54+58
		X						NO PARKING ANYTIME (WITH TWO-WAY ARROW)	1	1.5	1.5	RWM	3	6080015	1	P-1	9.0							LC 54+95
		X						NO PARKING ANYTIME (WITH TWO-WAY ARROW)	1	1.5	1.5	RWM	3	6080015	1	P-1	9.0							LC 55+67
119	R7-1	X						NO PARKING ANYTIME (WITH TWO-WAY ARROW)	1	1.5	1.5	RWM	3	6080015	1	P-1	9.0							LC 56+23
120	R7-1	X						NO PARKING ANYTIME (WITH TWO-WAY ARROW)	1	1.5	1.5	RWM	3	6080015	1	P-1	9.0							LC 57+30
		X						NO PARKING ANYTIME (WITH TWO-WAY ARROW)	1	1.5	1.5	RWM	3	6080015	1	P-1	9.0							LC 57+93
		X						NO PARKING ANYTIME (WITH TWO-WAY ARROW)	1	1.5	1.5	RWM	3	6080015	1	P-1	9.0							LC 58.71
121	R7-1	X						NO PARKING ANYTIME (WITH TWO-WAY ARROW)	1	1.5	1.5	RWM	3	6080015	1	P-1	9.0							LC 57+78
		X						NO PARKING ANYTIME (WITH TWO-WAY ARROW)	1	1.5	1.5	RWM	3	6080015	1	P-1	9.0							LC 58+65
		X						NO PARKING ANYTIME (WITH TWO-WAY ARROW)	1	1.5	1.5	RWM	3	6080015	1	P-1	9.0							LC 59.38
122	R7-1	X						NO PARKING ANYTIME (WITH TWO-WAY ARROW)	1	1.5	1.5	RWM	3	6080015	1	P-1	9.0							LC 60+82
		X						NO PARKING ANYTIME (WITH TWO-WAY ARROW)	1	1.5	1.5	RWM	3	6080015	1	P-1	9.0							LC 61+48
		X						NO PARKING ANYTIME (WITH TWO-WAY ARROW)	1	1.5	1.5	RWM	3	6080015	1	P-1	9.0							LC 62+57
123	D11-1	X						BIKE ROUTE	2.5	2	5.0	F-DA	3	6080015	1	P-1	12.5							LC 102+55
	M7-6 (SPL)	X						STRAIGHT AHEAD & RIGHT & LEFT DIRECTIONAL ARROW (GREEN)	2	1.5	3.0	RWM	3	6080015										

ABBREVIATIONS:
LC - LA CHOLLA BOULEVARD
RR - RUTHRAUFF ROAD

NOTES:

1. THE ENGINEER SHALL VERIFY POST LENGTHS AND ELEVATIONS.
2. THE ENGINEER MAY SHIFT A SIGN IN ORDER TO ACHIVE A MORE DESIRABLE LOCATION.
3. QUANTITIES ARE APROXIMATE AND FOR THE CONTRACTORS INFORMATION ONLY.

POST TYPES:
P-1: PERFORATED (SINGLE)
U: U-CHANNEL

Arizona Blue Stake
1-800-STAKE-IT
1-800-782-5348
Call Two Working Days Before You Dig

No.	Revision Description	Engineer	Date

		Date
Designed	H. Schneider	July/2009
Drawn	H. Schneider, K. Monsen	July/2009
Checked	R. Britton	July/2009
Proj. Engr.	H. Schneider	Aug/2009

Priscilla S. Cornelio, P.E., Director

Expires 09-30-2011

HDR Engineering, Inc.
5210 East Williams Circle, Suite 530
Tucson, AZ 85711-4459
(520) 584-3600

Pima County Department of Transportation

LA CHOLLA BLVD.
RUTHRAUFF RD. TO RIVER RD.
SIGN SUMMARY SHEETS
FOR LA CHOLLA BLVD.

Scales | Sheet T25 of T25 | Page 175 of 356

Project • 4LCITR

08\20\09 4:58:41 PM aledesma

012145
00000000005914
Pima_County_Dept_of_Transportation\PCDOT-La_Cholla_Blvd-Ruthrauff\13.00_CAD\Construction_Documents\Civil\21C-24.dgn

TRAFFIC SIGNAL GENERAL NOTES:

1. All equipment / materials and construction shall meet or exceed the requirements contained in the current Pima County / City of Tucson "Standard Specifications for Public improvements" and "Standard Details for Public Improvements", the Special Provisions and the plans.
2. All pedestrian push button assemblies shall meet ADA requirements. The signs that shall be used are identified in the 2003 MUTCD as R10-3b on page 2B-40.
3. Metro street name signs shall be installed such that the bottom of the sign is no less than 17 feet above the roadway pavement or no less than 16 feet above the finished grade beyond the shoulder, bike lane or multi-use lane.
4. The exact location of each new pole foundation, pull box, controller cabinet foundation, UPS cabinet foundation and electric service pedestal foundation shall be approved by the Engineer prior to installation.
5. The top of the pole foundation shall be level with the finished grade. If the slope or shoulder drops off from finished grade, the contractor shall grade around pole foundation. The top of the foundation shall extend no more than 4 inches above surrounding grade.
6. Only new conduit and cable shall be installed.
7. All conduits shall be cleaned by compressed air and a properly sized conduit piston or mandrel shall be pulled through the conduit prior to cable installation.
8. Conduit installed under existing paved driveways, which are not scheduled to be reconstructed as part of this project, shall be installed by means of boring.
9. ITS / roadway lighting sleeves shall be installed under all intersecting side streets and driveways on all major roadway reconstruction projects, unless directed otherwise by the Engineer. Each end of the sleeve shall be sealed with a Carlon MAEPOX, or approved equal.
10. Pull boxes shall not be installed within concrete curb access ramps. In addition, any pull boxes installed behind curbs shall be installed between the curb and the proposed / future sidewalk or beyond the proposed / future sidewalk. An exception to this note would be pull boxes installed in a median. Any pull boxes installed along an uncurbed roadway shall be installed adjacent to, but not within, the shoulder.
11. A ¾in. x 10 ft. ground rod shall be installed in the No. 7 pull box (with the extension) adjacent to the controller cabinet. Two ground rod clamps shall be furnished for grounding the ground wire.
12. The high voltage cables should be separated from the low voltage cables as much as possible.
13. A #14 AWG IMSA 19-1-1984 7-conductor solid wire cable shall be installed from each traffic signal terminal strip to the concrete pull box adjacent to the pole foundation leaving three feet of slack for each cable (measured from the top of the pull box) in the pull box.
14. Two #10 AWG-XHHW conductors shall be installed from each luminaire to the concrete pull box adjacent to the pole foundation, leaving three feet of slack for each conductor (measured from the top of the pull box) in the pull box. Route four conductors to the luminaire with the photoelectric cell. An in-line fuse shall be installed for each luminaire in the associated pull box.
15. Poles with pedestrian signals and push button stations shall use one 7-conductor cable for both the push button station and the pedestrian signal. The outer cable jacket shall be removed at the hand hole height. Two conductors shall be routed to the push button station and the remaining conductors shall be routed to the pedestrian signal.
16. All vehicle roadway detection loop cables shall be #14 AWG IMSA 51-5-1985 cable. Lead-in cables shall be #16 AWG IMSA 50-2-1984 cable. No splices shall be allowed in the roadway detection loop cable except at the pull box adjacent to loop.
17. The telephone interconnect cable and detector lead-in cable shall not be spliced.
18. The emergency vehicle pre-emption sensor cable shall be Opticom Detector Cable Model No. 138. The cable shall not be spliced.
19. The Econolite Terra Branch cable (Part No. 1175-01X) shall be installed for the video camera, unspliced, from the traffic signal pole hand hole, to the traffic signal controller cabinet. The Auto Scope camera cable shall extend from the mounted camera to the hand hole. The camera cable and home run cable shall be spliced in the pole hand hole with Scotlok UAL connectors with a 3M E9Y crimping tool, or equal.
20. Detection loop saw cuts shall be flushed with water under pressure and then dried with air under pressure.
21. The Tucson Electric Power Company Public Improvement Coordinator (918-8359) shall be contacted by the Contractor to verify the location of the electric service connection at the intersection. The Contractor shall be responsible for excavating and backfilling the trench and installing any necessary sleeves under sidewalks or driveways in which the electric service cable in conduit (CIC) is to be installed by TEP.
22. The Qwest Public Improvement Coordinator (292-8255) shall be contacted by the Contractor to verify the location of the telephone connection at each intersection.
23. All vehicle and pedestrian indications shall be LED. Signal lenses shall be tinted to the color of the indication.
24. The contractor shall contact Blue Stake at 1-800-782-5348, a minimum of 2 working days prior to any excavation.
25. The contractor shall maintain and allow access to all Pima County Waste Water manholes located within the ROW. Access must be maintained 24 hours per day, seven days per week. No utilities may be placed within six feet of a force main.
26. Any equipment and/or utilities within the project limits that are damaged or destroyed by the contractor shall be repaired or replaced at the sole expense of the contractor.
27. The traffic signal operation at existing signalized intersections shall be maintained throughout the duration of the project.
28. Conduits for future use shall be sealed with a properly sized tapered polyethylene duct plug at each termination point. The #8 bare bond wire shall be looped through the plug pull tab and two feet of slack doubled back into the conduit.
29. The face of any vehicle or pedestrian signal head that is not in service shall be covered with a prefabricated nylon cover designed to completely cover the visors and lenses. The covers shall be securely held in place by integral nylon straps and buckles. The cover shall have a fine mesh strip through the center to permit testing of the signals without removing the cover. Out of service heads shall not be turned, covered with burlap, cardboard or other material.

RESPONSIBILITIES:

1. The contractor shall supply and install the following equipment and materials as specified in the plans: Steel pole anchor bolts (with nuts and washers), concrete pole foundations with reinforcement (where specified), traffic signal controller cabinet(s) with controller(s) and all auxiliary equipment, controller cabinet concrete foundation(s), concrete pull boxes, electrical conduit, ground rods and connectors, bare bond wire and all other conductors, poles, mast arms, traffic signals and mounting assemblies, pedestrian signals and mounting assemblies, pedestrian push button stations with signs, luminaries, photocells, electric service pedestal(s) and concrete foundation(s), video detection system equipment, vehicle detection loops, and all other appurtenances necessary for the operation of the traffic signal installation(s), except as modified in the plans.
2. The contractor shall deliver the controller cabinet(s) with the controller(s) and auxiliary equipment specified in the plans to the PCDOT Maintenance Yard, 1313 S. Mission Road, Bldg. #28 for testing. This shall occur a minimum of two weeks prior to the installation(s) at the intersection(s). Contact Don Pittenger (740-2632) at least 2 working days prior to the delivery of the controller cabinet(s) to PCDOT. The contractor shall pick up and transport the controller cabinet(s) from the PCDOT Maintenance Yard to the intersection(s) after the PCDOT staff has tested the equipment and approved it for installation.
3. The contractor shall install each traffic controller cabinet on its foundation and route all of the conductors into the controller cabinet. The PCDOT staff shall terminate the conductors in the controller cabinet.
4. The contractor shall carefully disassemble and salvage all existing traffic signal and street lighting equipment that is not to remain or be relocated. All of the equipment shall be returned to the PCDOT Maintenance Yard, 1313 S. Mission Rd. The equipment shall be unloaded by the contractor. Contact Don Pittenger (740-2632) at least 2 working days prior to returning the equipment.
5. The contractor shall salvage and replant any landscaping vegetation that may be damaged by construction activities. The contractor shall obtain prior approval from Connie Hutchins (740-5969) before any plants are moved.
6. The contractor shall repair/restore any landscape irrigation components damaged by construction activity to their original condition.
7. PCDOT shall fabricate metro street name signs for this intersection. PCDOT shall provide all mounting hardware and PCDOT shall install metro street name signs.
8. The contractor shall provide all materials and install all traffic control signs and pavement markings required to complete the project.

Arizona Blue Stake
1-800-STAKE-IT
1-800-782-5348
Call Two Working Days Before You Dig

No.	Revision Description	Engineer	Date

		Date
Designed	J. Cruz	July/2009
Drawn	J. Cruz	July/2009
Checked	M. Barton	July/2009
Proj. Engr.	M. Barton	Aug/2009

Priscilla S. Cornelio, P.E., Director

Pima County Department of Transportation

LA CHOLLA BLVD.
RUTHRAUFF RD. TO RIVER RD.
TRAFFIC SIGNAL GENERAL NOTES

HDR Engineering, Inc.
5210 East Williams Circle, Suite 530
Tucson, AZ 85711-4459
(520) 584-3600

Expires 03-31-2010

Scales | Sheet SL1 of SL12 | Page 176 of 356

012145
00000000005994
Pima_County_Dept_of_Transportation\PCDOT-La_Cholla_Blvd-Ruthrauff\13.00_CAD\Construction_Documents\Civil\30C-00.dgn

08\20\09 4:58:46 PM aledesma

Project # 4LCITR

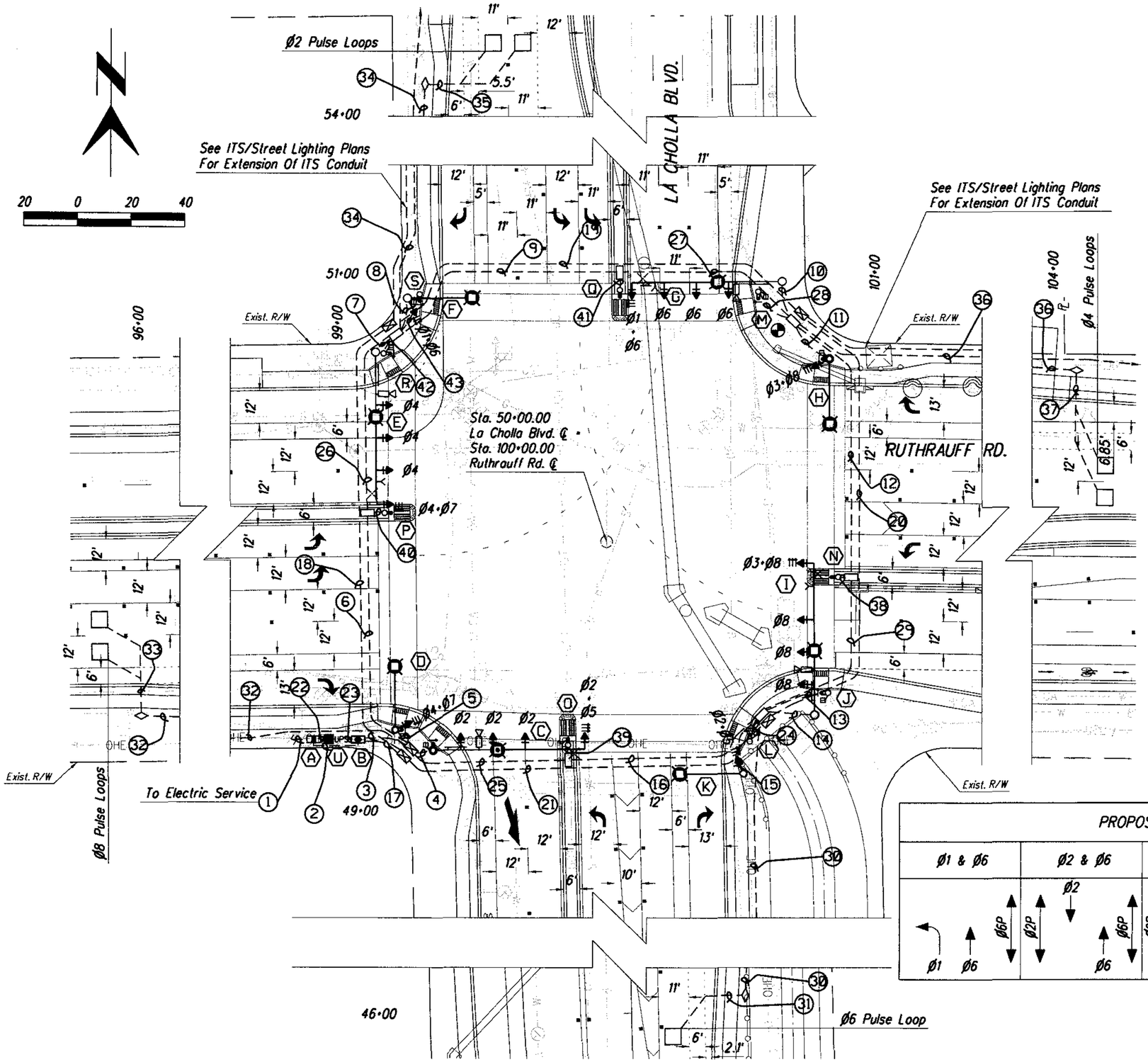

STOP LINE AND LOOP DETECTOR LOCATIONS			
DIRECTION	ITEMS	STATION	OFFSET
Eastbound (Minor St.)	Stop Line @ Curb	99+14.70	59.01' Rt
	Stop Line @ Median	99+14.99	9.00' Lt
	Ø8 Pulse Loop Detectors	95+85.18	-
Westbound (Minor St.)	Stop Line @ Curb	100+88.02	59.00' Lt
	Stop Line @ Median	100+88.96	9.06' Rt
	Ø4 Pulse Loop Detectors	104+18.96	-
Northbound (Major St.)	Stop Line @ Curb	49+20.61	41.30' Rt
	Stop Line @ Median	49+21.93	13.00' Lt
	Ø6 Pulse Loop Detectors	45+91.16	-
Southbound (Major St.)	Stop Line @ Curb	50+96.73	60.00' Lt
	Stop Line @ Median	50+96.03	3.00' Rt
	Ø2 Pulse Loop Detectors	54+26.73	-

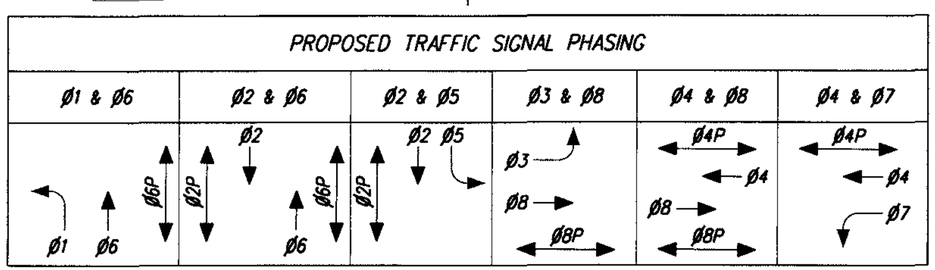

LA CHOLLA BLVD. / RUTHRAUFF RD.
INTERSECTION "A"

Arizona Blue Stake
1-800-STAKE-IT
1-800-782-5348
Call Two Working Days Before You Dig

Priscilla S. Cornelio, P.E., Director

No.	Revision Description	Engineer	Date

		Date
Designed	J. Cruz	July 2009
Drawn	J. Cruz	July 2009
Checked	M. Linetan	July 2009
Proj. Engr.	M. Barton	Aug 2009

Expires 03-31-2010

HDR Engineering, Inc.
5210 East Williams Circle, Suite 530
Tucson, AZ 85711-4459
(520) 584-3600

Pima County Department of Transportation

LA CHOLLA BLVD.
RUTHRAUFF RD. TO RIVER RD.
PLAN VIEW SHEET

Scales	Horiz. 1"=20' Vert. 1"=20'	Sheet SL2 of SL12	Page 177 of 356

012145
00000000000059914
Pima_County_Dept_of_Transportation\PC001-La_Cholla_Blvd-Ruthrauff\13.00_CAD\Construction_Documents\Civil\30C-01.dgn

08\20\09 4:58:53 PM aledesma

Project • 4LCITR

CABINET AND POLE SCHEDULE

CABINET	TYPE	CONTROLLER	AUX.CONTROLLER	REMARKS	LOCATION	STANDARDS
(A)	MYERS 125 AMP 120/240V MUEGI6-125WTB	METERED SERVICE PEDESTAL WITH ONE SINGLE POLE 50 AMP AND ONE 30 AMP SINGLE POLE CIRCUIT BREAKER	(1) 30 AMP SINGLE POLE BREAKER FOR SIGNAL, (1) 50 AMP SINGLE POLE BREAKER FOR LIGHTING, (2) 110V. SINGLE POLE BREAKER SPARE.	SHARE FOUNDATION WITH UPS. FOUNDATION SIZE IS 66'L X 36'W X 24'D.	STA. 98+90, 72' RT RUTHRAUFF RD ℄. EXACT LOCATION TO BE DETERMINED BY ENGINEER IN THE FIELD.	T 1801
(U) UPS	AIRPAX DIM. 392814 ENCLOSURE w/ (2) REMOVABLE SHELVES, OR EQUAL	AIRPAX DIMENSIONS 24MII WITH (2) 105AH. GROUP-31 AGM BATTERIES	-	SHARE FOUNDATION WITH SERVICE PEDESTAL FOUNDATION.	SAME AS LOCATION FOR SERVICE METER PEDESTAL ABOVE	T 1801
(B)	NEMA TS2-1998 TYPE ITS2 SIZE 6 DETECTOR RACK CONFIGURATION 1	NEMA TS-2 TYPE 2, ECONOLITE MODEL ASC/3-2100 OR EQUAL	16 CHANNEL MMU, RACK MOUNTED LOOP DETECTORS, NEMA SOLID STATE NEMA LOAD SWITCHES, VIDEO DETCTION AND A THREE POLE STREET LIGHTING CONTACTOR AND THREE 20 AMP CIRCUIT BREAKERS.	WITH UPS	STA. 99+06.72' RT RUTHRAUFF RD ℄. EXACT LOCATION TO BE DETERMINED BY ENGINEER IN THE FIELD.	T 203 T 312

POLE NUMBER	POLE TYPE	MAST ARM SIGNAL	MAST ARM LUMIN	SIGNALS MTG	SIGNALS FACE	PED PB TYPE/SIGN	LUMINAIRE	REMARKS	LOCATION	STANDARDS
(C)	R	55'	20'	(4) ASTRO-BRAC (1) XI	(4) F (1) PED	TYPE 1 2' ADA PB & PPB SIGN R10-3B(L)	400 W/ 120 V HPS W/ FULL CUTOFF	EMERGENCY VEHICLE PRE-EMPT BEACON & SENSOR PLACED ON MAST ARM AS DIRECTED BY ENGINEER. PROVIDE/INSTALL PHOTOCELL ON LUMINAIRE (C). MOUNT DETECTION CAMERA ON MAST ARM.	(C) STA. 49+24, 66' LT LA CHOLLA BLVD ℄ EXACT LOCATION TO BE DETERMINED BY ENGINEER IN THE FIELD	T 413 T 909 T 417 T 1101 T 418 T 1103 T 801 T 1505 T 802 T 1901 T 803 T 1902 T 804 T 1903 T 901 T 1905
(D) (F) (H)	G	-	20'	(1) V (D) (H) (1) XI	(1) F (D) (H) (1) PED	(D) (H) TYPE 1 2' ADA PB & PPB SIGN R10-3B(R)	400 W/ 120 V HPS W/ FULL CUTOFF	EXACT LOCATION TO BE DETERMINED BY ENGINEER IN THE FIELD.	(D) STA. 49+32, 80' LT LA CHOLLA BLVD ℄ (F) STA. 50+91.30, 73.10' LT LA CHOLLA BLVD ℄ (H) STA. 50+67, 84' RT LA CHOLLA BLVD ℄ EXACT LOCATION TO BE DETERMINED BY ENGINEER IN THE FIELD	T 407 T 1101 T 417 T 1103 T 418 T 801 T 802 T 803 T 804 T 903 T 909
(J) (L) (M) (R) (S)	A 10' (W/17' FRANGIBLE BASE)	-	-	(1) XI	(1) PED	TYPE 1 2' ADA PB & PPB SIGN R10-3B(R)	-	INSTALL REMOVABLE CAST IRON CAP SECURED WITH SET SCREWS.	(J) STA. 49+42, 81' RT LA CHOLLA BLVD ℄ (L) STA. 49+24, 52' RT LA CHOLLA BLVD ℄ (M) STA. 50+92, 58' RT LA CHOLLA BLVD ℄ (R) STA. 50+70.58, 82.20' LT LA CHOLLA BLVD ℄ (S) STA. 50+92.67, 68.60' LT LA CHOLLA BLVD ℄ EXACT LOCATION TO BE DETERMINED BY ENGINEER IN THE FIELD	T 401 T 418 T 804 T 909 T 1101 T 1103
(E) (G) (I)	R	55'	20'	(4) ASTRO-BRAC	(4) F	-	400 W/ 120 V HPS W/ FULL CUTOFF	EMERGENCY VEHICLE PRE-EMPT BEACON & SENSOR PLACED ON MAST ARM AS DIRECTED BY ENGINEER. MOUNT DETECTION CAMERA ON MAST ARM.	(E) STA. 50+71.11, 85.23' LT LA CHOLLA BLVD ℄ (G) STA. 50+96, 66.5' RT LA CHOLLA BLVD ℄ (I) STA. 49+34, 76' RT LA CHOLLA BLVD ℄ EXACT LOCATION TO BE DETERMINED BY ENGINEER IN THE FIELD	T 413 T 903 T 417 T 1901 T 418 T 1902 T 801 T 1903 T 802 T 1905 T 803 T 901
(K)	Type 2B	-	-	(1) V	(1) F	-	400 W/ 120 V HPS W/ FULL CUTOFF	EXACT LOCATION TO BE DETERMINED BY ENGINEER IN THE FIELD.	(K) STA. 49+12, 49' RT LA CHOLLA BLVD ℄ EXACT LOCATION TO BE DETERMINED BY ENGINEER IN THE FIELD	T 417 T 903 T 418 T 445 T 801 T 802 T 803
(N) (O) (P) (Q)	TYPE 1 PED PUSH BUTTON POST	-	-	-	-	TYPE 1 2' ADA PB & PPB SIGN R10-3B(B)	-	INSTALL REMOVABLE CAST IRON CAP SECURED WITH SET SCREWS.	(N) STA. 49+85, 86' RT LA CHOLLA BLVD ℄ (O) STA. 49+25, 16' LT LA CHOLLA BLVD ℄ (P) STA. 50+12, 82' LT LA CHOLLA BLVD ℄ (Q) STA. 50+94, 6' RT LA CHOLLA BLVD ℄ EXACT LOCATION TO BE DETERMINED BY ENGINEER IN THE FIELD	T 418 T 419 T 1101 T 1103 T 1105

** SIGNALS SHALL BE LED, PEDINDICATORS SHALL BE LED HAND, FIBER OPTIC MAN.
ALL CABLE SPLICES BETWEEN NEW AND EXISTING CABLE ARE TO OCCUR AT A PULL BOX.

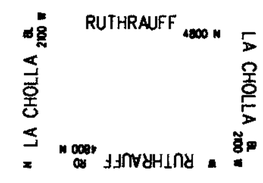

METRO STREET NAME SIGN

LEGENDS

LOW VOLTAGE CIRCUIT

- (X) Y"C - Number & Size of Conduit
- (X) - Number of Cables
- VC - Video Detection Cable Econolite Terra Branch Cable, Part No. 1175-01X
- PS - Pre-Empt Sensor, Opticom *20 3 CC Shield Cable (Model 138)
- TI - Telephone Interconnect, 4 CC *20
- DLC - Detector Lead In Cable, *16 AWG IMSA 50-2-1984
- RLW - Roadway Loop Wire, *14 AWG IMSA 51-5-1985

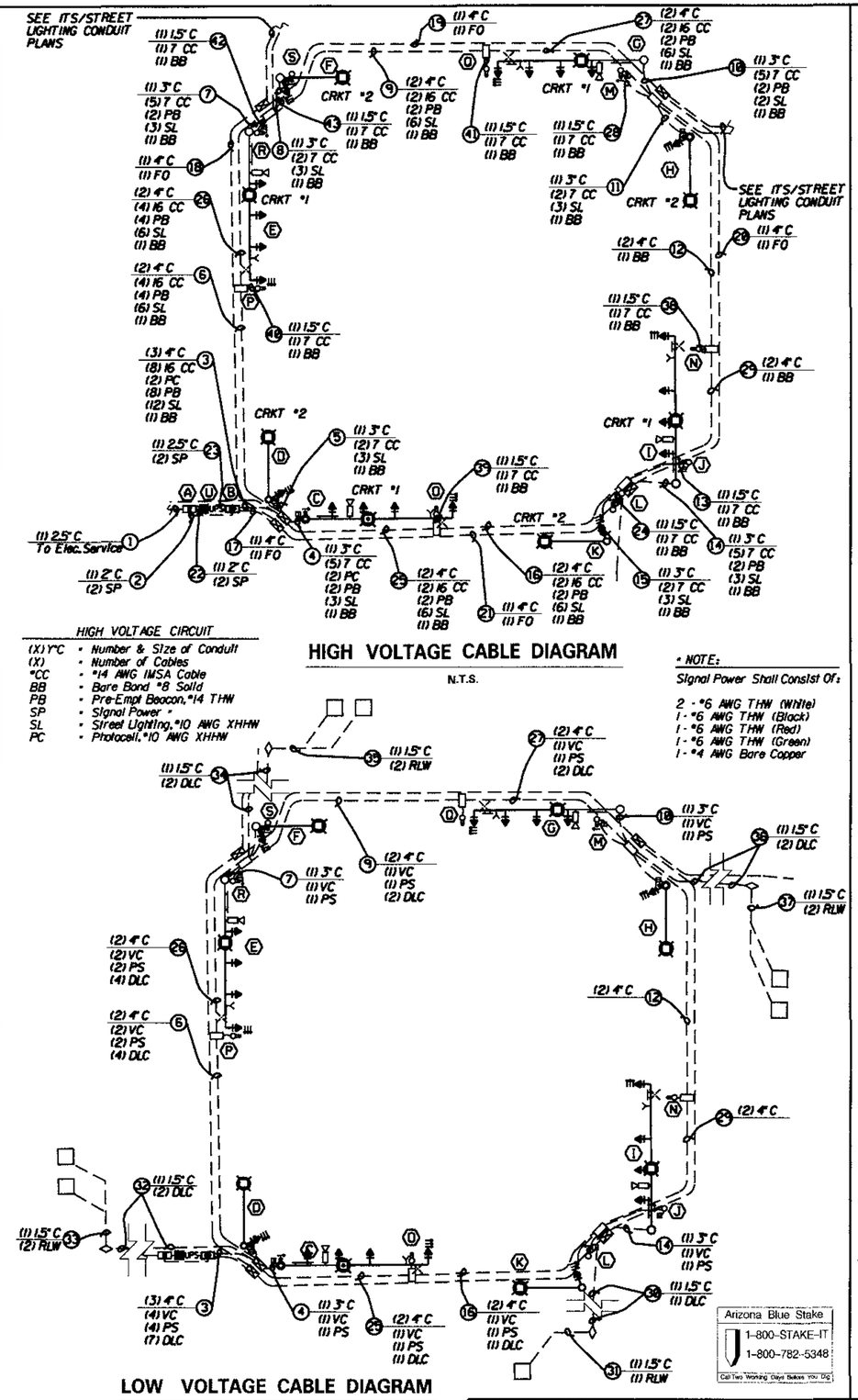

HIGH VOLTAGE CABLE DIAGRAM

N.T.S.

HIGH VOLTAGE CIRCUIT

- (X) Y"C - Number & Size of Conduit
- (X) - Number of Cables
- *CC - *14 AWG IMSA Cable
- BB - Bare Bond *8 Solid
- PB - Pre-Empt Beacon, *14 THW
- SP - Signal Power "
- SL - Street Lighting, *10 AWG XHHW
- PC - Photocell, *10 AWG XHHW

* NOTE:
Signal Power Shall Consist Of:

2 - *6 AWG THW (White)
1 - *6 AWG THW (Black)
1 - *6 AWG THW (Red)
1 - *6 AWG THW (Green)
1 - *4 AWG Bare Copper

LOW VOLTAGE CABLE DIAGRAM

N.T.S.

Arizona Blue Stake
1-800-STAKE-IT
1-800-782-5348
Call Two Working Days Before You Dig

Pima County Department of Transportation

Priscilla S. Cornelio, P.E., Director

No.	Revision Description	Engineer	Date

		Date
Designed	J. Cruz	July 2009
Drawn	J. Cruz	July 2009
Checked	M. Barton	July 2009
Proj. Engr.	M. Barton	Aug 2009

Registered Professional Engineer (Civil) CERTIFICATE NO. 25955 MICHAEL L. BARTON Date Signed 8-24-2009 Expires 03-31-2010

HDR Engineering, Inc.
5210 East Williams Circle, Suite 530
Tucson, AZ 85711-4459
(520) 584-3600

LA CHOLLA BLVD.
RUTHRAUFF RD. TO RIVER RD.
CONDUCTOR AND POLE SCHEDULE
FOR LA CHOLLA BLVD/RUTHRAUFF RD
INTERSECTION

Scales N.T.S. | Sheet SL3 of SL12 | Page 178 of 356

012145
0000000000059914
Pima_County_Dept_of_Transportation\PCDOT-La_Cholla_Blvd-Ruthrauff\13.00_CAD\Construction_Documents\Civil\3OC-02.dgn

08\20\09 4:58:59 PM oledesma

Project # 4LCITR

4LCITR

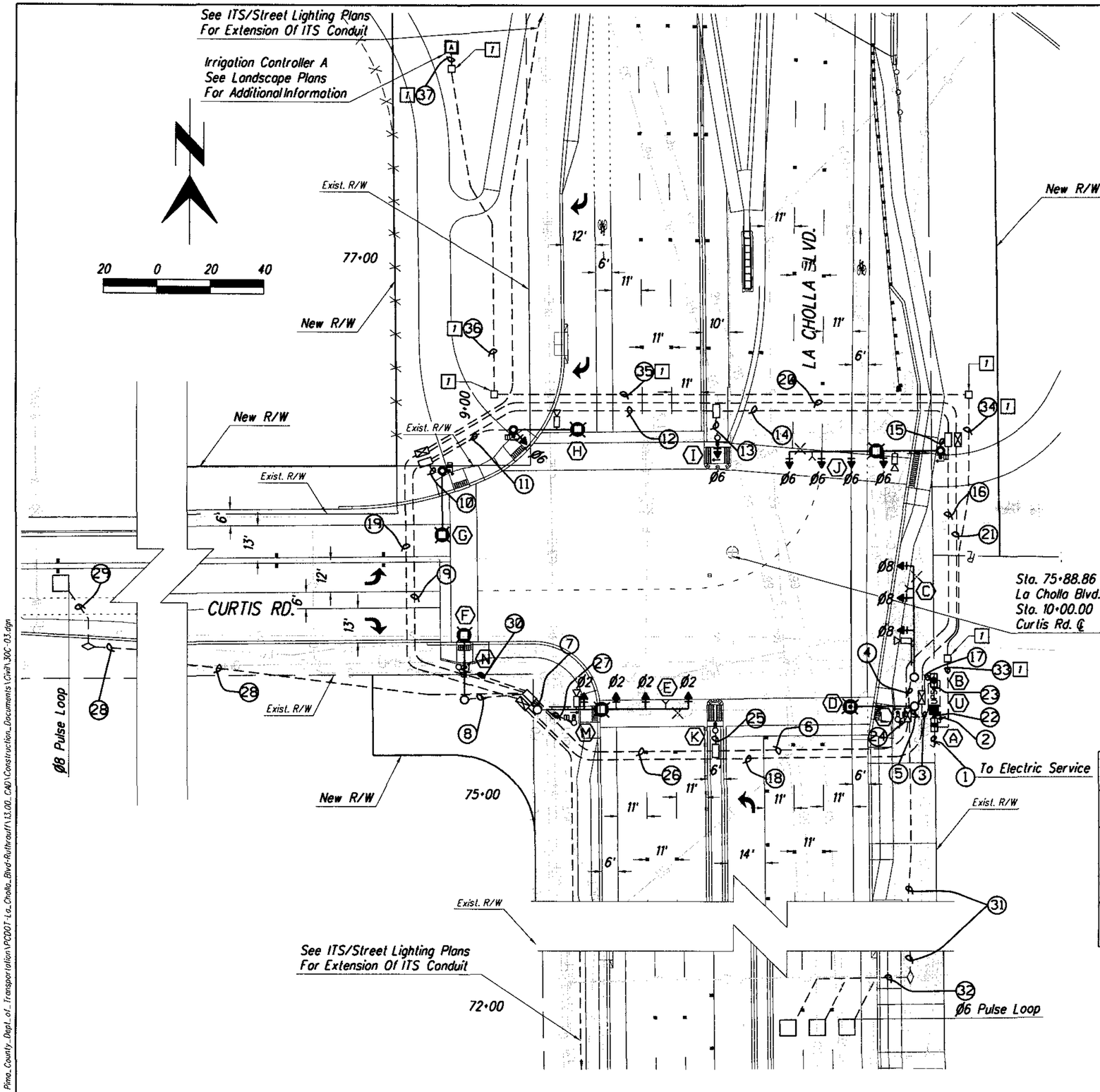

STOP LINE AND LOOP DETECTOR LOCATIONS			
DIRECTION	ITEMS	STATION	OFFSET
Eastbound (Minor St.)	Stop Line @ Curb	8+90.91	31.00' Rt
	Stop Line @ Double Yellow	8+90.55	0'
	Ø8 Pulse Loop Detector	6+30.55	-
Northbound (Major St.)	Stop Line @ Curb	75+21.68	50.28' Rt
	Stop Line @ Median	75+21.66	4.00' Lt
	Ø6 Pulse Loop Detector	71+91.67	-
Southbound (Major St.)	Stop Line @ Curb	76+35.68	70.79' Lt
	Stop Line @ Median	76+35.68	10.00' Lt
	-	-	-

Note:

1 Conduit and Conductors For Irrigation Controller Power. See Landscaping Plans For Additional Information.

PROPOSED TRAFFIC SIGNAL PHASING			
Ø2 + Ø6	Ø6	Ø8	Ø4 PED + Ø8 PED
Ø2, Ø2 PED, Ø6	Ø6	Ø8	Ø4 PED, Ø8 PED

LA CHOLLA BLVD. / CURTIS RD.
INTERSECTION "B"

Arizona Blue Stake
1-800-STAKE-IT
1-800-782-5348
Call Two Working Days Before You Dig

Scales	Horiz. 1"=20' Vert. 1"=20'	Sheet SL4 of SL12	Page 179 of 356

Priscilla S. Cornelio, P.E., Director

No.	Revision Description	Engineer	Date

		Date
Designed	J. Cruz	July/2009
Drawn	J. Cruz	July/2009
Checked	M. Barton	July/2009
Proj. Engr.	M. Barton	Aug/2009

Registered Professional Engineer (Civil) CERTIFICATE NO. 25955 MICHAEL L. BARTON Date Signed 8-24-2009 Arizona U.S.A. Expires 03-31-2010

HDR Engineering, Inc. 5210 East Williams Circle, Suite 530 Tucson, AZ 85711-4459 (520) 584-3600

Pima County Department of Transportation

LA CHOLLA BLVD.
RUTHRAUFF RD. TO RIVER RD.
PLAN VIEW SHEET

012145
0000000000599114
Pima_County_Dept._of_Transportation\PCDOT-La_Cholla_Blvd-Ruthrauff\13.00_CAD\Construction_Documents\Civil\30C-03.dgn

08\20\09 4:59:07 PM aledesma

Project • 4LCITR

CABINET AND POLE SCHEDULE

CABINET	TYPE	CONTROLLER	AUX.CONTROLLER	REMARKS	LOCATION	STANDARDS
(A)	MYERS 125 AMP 120/240V MUEGI6-125WTB	METERED SERVICE PEDESTAL WITH ONE SINGLE POLE 50 AMP AND ONE 30 AMP SINGLE POLE CIRCUIT BREAKER	(1) 30 AMP SINGLE POLE BREAKER FOR SIGNAL,(1) 50 AMP SINGLE POLE BREAKER FOR LIGHTING,(2) 110V.SINGLE POLE BREAKER SPARE.	SHARE FOUNDATION WITH UPS.FOUNDATION SIZE IS 66"L X 36"W X 24"D.	STA.75+25,75' RT LA CHOLLA BLVD ℄.EXACT LOCATION TO BE DETERMINED BY ENGINEER IN THE FIELD.	T 1801
(U) UPS	AIRPAX DIM.392814 ENCLOSURE w/ (2) REMOVABLE SHELVES.OR EQUAL	AIRPAX DIMENSIONS 24WI WITH (2) 105AH, GROUP-31 AGM BATTERIES	-	SHARE FOUNDATION WITH SERVICE PEDESTAL FOUNDATION.	SAME AS LOCATION FOR SERVICE METER PEDESTAL ABOVE	T 1801
(B)	NEMA TS2-1998 TYPE 1TS2 SIZE 6 DETECTOR RACK CONFIGURATION 1	NEMA TS-2 TYPE 2, ECONOLITE MODEL ASC/ 3-2100 OR EQUAL	16 CHANNEL MMU,RACK MOUNTED LOOP DETECTORS,NEMA SOLID STATE NEMA LOAD SWITCHES,VIDEO DETCTION AND A THREE POLE STREET LIGHTING CONTACTOR AND THREE 20 AMP CIRCUIT BREAKERS.	-	STA.75+42,75' RT LA CHOLLA BLVD ℄.EXACT LOCATION TO BE DETERMINED BY ENGINEER IN THE FIELD.	T 203 T 312

POLE NUMBER	POLE TYPE	MAST ARM SIGNAL	MAST ARM LUMIN	SIGNALS MTG	SIGNALS FACE	PED PB TYPE/SIGN	LUMINAIRE	REMARKS	LOCATION	STANDARDS
(E)	R	55'	20'	(4) ASTRO-BRAC	(4) F	-	400 W/ 120 V HPS W/ FULL CUTOFF	EMERGENCY VEHICLE PRE-EMPT BEACON & SENSOR PLACED ON MAST ARM AS DIRECTED BY ENGINEER.MOUNT DETECTION CAMERA ON MAST ARM.	(E) STA.75+32,73.50' LT LA CHOLLA BLVD ℄ EXACT LOCATION TO BE DETERMINED BY ENGINEER IN THE FIELD	T 413 T 909 T 417 T 1901 T 418 T 1902 T 801 T 1903 T 802 T 1905 T 803 T 901
(D)	G	-	20'	-	-	-	400 W/ 120 V HPS W/ FULL CUTOFF	PROVIDE/INSTALL PHOTOCELL ON LUMINIARE	(D) STA.75+32, 68' RT LA CHOLLA BLVD ℄ EXACT LOCATION TO BE DETERMINED BY ENGINEER IN THE FIELD	T 407 T 417 T 418 T 1505
(M)	A 10' (W/17" FRANGIBLE BASE)	-	-	(1) X1	(1) PED	TYPE 1 2" ADA PB & PPB SIGN R10-3B(L)	-	INSTALL REMOVABLE CAST IRON CAP SECURED WITH SET SCREWS.	(M) STA.75+28, 59' LT LA CHOLLA BLVD ℄ EXACT LOCATION TO BE DETERMINED BY ENGINEER IN THE FIELD	T 401 T 1101 T 418 T 1103 T 804 T 909
(G)	G	-	20'	(1) X1	(1) PED	TYPE 1 2" ADA PB & PPB R10-3B (L)	400 W/ 120 V HPS W/ FULL CUTOFF	-	(G) STA.8+92, 33' LT CURTIS RD ℄ EXACT LOCATION TO BE DETERMINED BY ENGINEER IN THE FIELD	T 407 T 909 T 417 T 1101 T 418 T 1103 T 804
(I)	A 10' (W/17" FRANGIBLE BASE)	-	-	(1) V	(1) O	TYPE 1 2" ADA PB & PPB SIGN R10-3B(B)	-	INSTALL REMOVABLE CAST IRON CAP SECURED WITH SET SCREWS.	(I) STA.76+33, 5' LT LA CHOLLA BLVD ℄ EXACT LOCATION TO BE DETERMINED BY ENGINEER IN THE FIELD	T 401 T 1101 T 418 T 1103 T 801 T 1105 T 802 T 803 T 903
(F)	2	-	-	-	-	-	400 W/ 120 V HPS W/ FULL CUTOFF	-	(F) STA.8+99, 52' RT CURTIS RD ℄ EXACT LOCATION TO BE DETERMINED BY ENGINEER IN THE FIELD	T 417 T 418 T 433 T 445
(J)	R	55'	20'	(4) ASTRO-BRAC (1) X1	(4) F (1) PED	TYPE 1 2" ADA PB & PPB SIGN R10-3B(L)	400 W/ 120 V HPS W/ FULL CUTOFF	EMERGENCY VEHICLE PRE-EMPT BEACON & SENSOR PLACED ON MAST ARM AS DIRECTED BY ENGINEER.MOUNT DETECTION CAMERA ON MAST ARM.	(J) STA.76+27, 78' RT LA CHOLLA BLVD ℄ EXACT LOCATION TO BE DETERMINED BY ENGINEER IN THE FIELD	T 413 T 909 T 417 T 1101 T 418 T 1103 T 801 T 1901 T 802 T 1902 T 803 T 1903 T 804 T 1905 T 901
(C)	O	40'	-	(3) ASTRO-BRAC	(3) F	-	-	EMERGENCY VEHICLE PRE-EMPT BEACON & SENSOR PLACED ON MAST ARM AS DIRECTED BY ENGINEER.MOUNT DETECTION CAMERA ON MAST ARM W/ EXTENSION BRACKET.	(C) STA.75+43, 68' RT LA CHOLLA BLVD ℄ EXACT LOCATION TO BE DETERMINED BY ENGINEER IN THE FIELD	T 413 T 1901 T 417 T 1902 T 418 T 1903 T 801 T 1905 T 802 T 803 T 901
(K)	TYPE 1 PED PUSH BUTTON POST	-		-	-	TYPE 1 2" ADA PB & PPB SIGN R10-3B(B)	-	INSTALL REMOVABLE CAST IRON CAP SECURED WITH SET SCREWS.	(K) STA.75+24, 7' LT LA CHOLLA BLVD ℄ EXACT LOCATION TO BE DETERMINED BY ENGINEER IN THE FIELD	T 418 T 419 T 1101 T 1103
(H)	G	-	20'	(1) V (1) X1	(1) F (1) PED	TYPE 1 2" ADA PB & PPB R10-3B(R)	400 W/ 120 V HPS W/ FULL CUTOFF	DETECTION CAMERA ON MAST ARM FOR SOUTHBOUND LA CHOLLA ADVANCE DETECTION.	(H) STA.76+37, 81' LT LA CHOLLA BLVD ℄ EXACT LOCATION TO BE DETERMINED BY ENGINEER IN THE FIELD	T 407 T 804 T 417 T 903 T 418 T 909 T 801 T 1101 T 802 T 1103 T 803 T 1905
(L) (N)	A 10' (W/17" FRANGIBLE BASE)	-	-	(1) X1	(1) PED	TYPE 1 2" ADA PB & PPB SIGN R10-3B(R)	-	INSTALL REMOVABLE CAST IRON CAP SECURED WITH SET SCREWS.	(L) STA.75+27, 62' RT LA CHOLLA BLVD ℄ (N) STA.8+98, 40' RT CURTIS RD ℄ EXACT LOCATION TO BE DETERMINED BY ENGINEER IN THE FIELD	T 401 T 1101 T 418 T 1103 T 804 T 909

** SIGNALS SHALL BE LED,PED INDICATORS SHALL BE LED HAND,FIBER OPTIC MAN.
ALL CABLE SPLICES BETWEEN NEW AND EXISTING CABLE ARE TO OCCUR AT A PULL BOX.

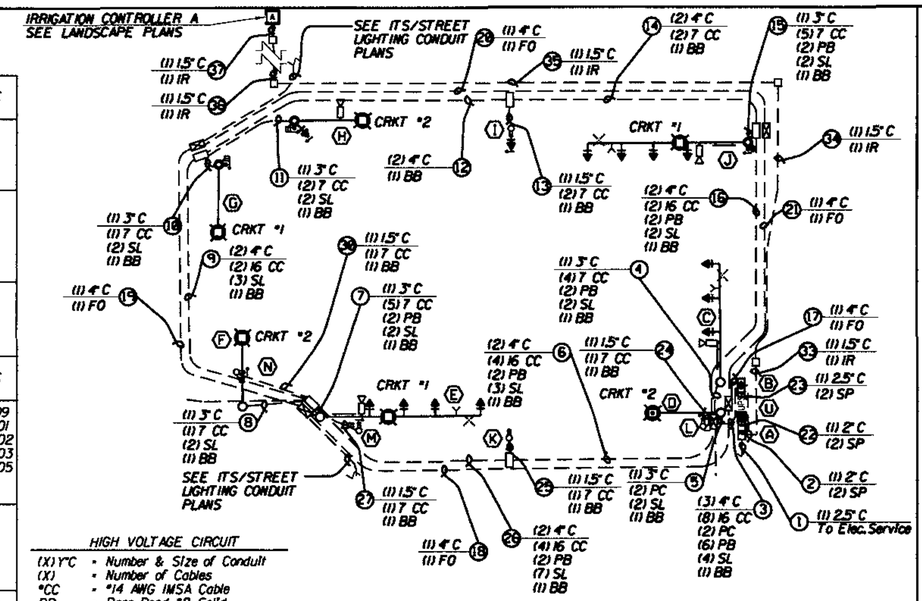

HIGH VOLTAGE CIRCUIT

(X) Y"C = Number & Size of Conduit
(X) = Number of Cables
*CC = *14 AWG IMSA Cable
BB = Bare Bond *8 Solid
PB = Pre-Empt Beacon, *14 THW
SP = Signal Power "
SL = Street Lighting, *10 AWG XHHW
PC = Photocell, *10 AWG XHHW
IR = Irrigation Power **

* NOTE:
Signal Power Shall Consist Of:
2 - *6 AWG THW (White)
1 - *6 AWG THW (Black)
1 - *6 AWG THW (Red)
1 - *6 AWG THW (Green)
1 - *4 AWG Bare Copper

** NOTE:
Irrigation Power Shall Consist Of:
1 - *14 AWG (Black)
1 - *14 AWG (White)
1 - *14 AWG (Green)

HIGH VOLTAGE CABLE DIAGRAM

N.T.S.

LOW VOLTAGE CIRCUIT

(X) Y"C = Number & Size of Conduit
(X) = Number of Cables
VC = Video Detection Cable Econolite Terra Branch Cable, Part No.1175-00X
PS = Pre-Empt Sensor, Opticom *20 3 CC Shield Cable (Model 138)
TI = Telephone Interconnect, 4 CC *20
DLC = Detector Lead In Cable, *16 AWG IMSA 50-2-1984
RLW = Roadway Loop Wire, *14 AWG IMSA 51-5-1985

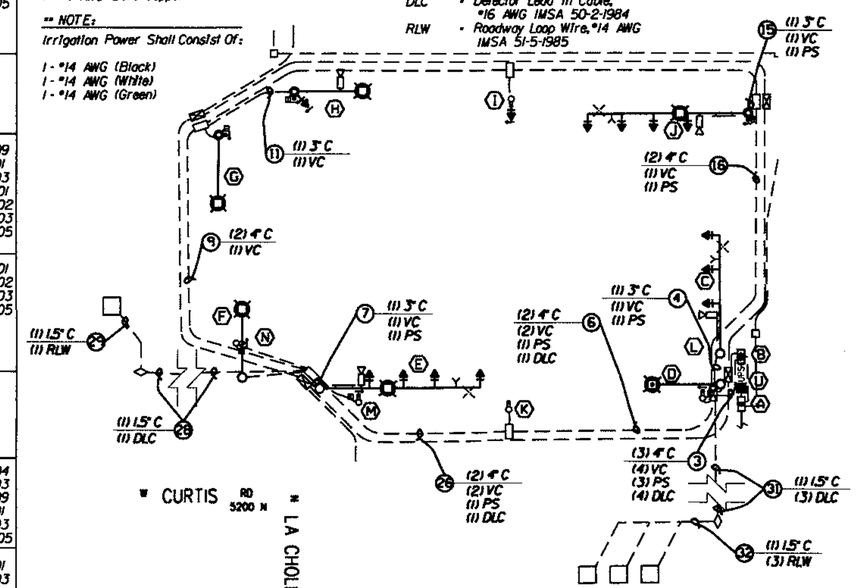

LOW VOLTAGE CABLE DIAGRAM

N.T.S.

METRO STREET NAME SIGN

LEGENDS

Arizona Blue Stake
1-800-STAKE-IT
1-800-782-5348
Call Two Working Days Before You Dig

Priscilla S. Cornelio, P.E., Director

No.	Revision Description	Engineer	Date

		Date
Designed	J. Cruz	July/2009
Drawn	J. Cruz	July/2009
Checked	M. Barton	July/2009
Proj. Engr.	M. Barton	Aug/2009

Registered Professional Engineer (Civil) CERTIFICATE NO. 25959 MICHAEL J. BARTON Date Signed 08-25-2009 ARIZONA U.S.A.
Expires 03-31-2010

HDR Engineering, Inc.
5210 East Williams Circle, Suite 530
Tucson, AZ 85711-4459
(520) 584-3600

Pima County Department of Transportation

LA CHOLLA BLVD.
RUTHRAUFF RD. TO RIVER RD.
CONDUCTOR AND POLE SCHEDULE
FOR LA CHOLLA BLVD/CURTIS RD
INTERSECTION

Scales	N.T.S.	Sheet	SL5 of SL12	Page	180 of 356

012145
0000000000055914
Pima_County_Dept._of_Transportation\PC001-La_Cholla_Blvd-Ruthrauff\13.00_CAD\Construction_Documents\Civil\30C-04.dgn

08\20\09 4:59:13 PM aledesma

Project • 4LCITR 4LCITR

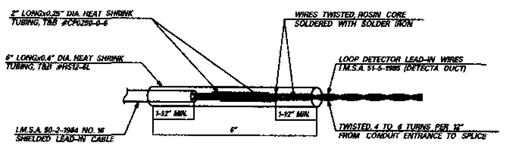

LOOP DETECTOR SPLICE
N.T.S.

1. LOOPS INSTALLED IN THE FINAL LIFT OF PAVEMENT SHALL BE SEALED WITH BLACK 3M DETECTOR LOOP SEALANT 5000 OR APPROVED EQUAL. LOOPS IN THE LEVELING COURSE MAY USE AN APPROVED ASPHALTIC EMULSION.
2. ALL 6'x6' LOOPS SHALL BE WOUND IN A CLOCKWISE DIRECTION.
3. TAG EACH LOOP WIRE AT THE PULL BOX AS START (S), OR FINISH (F). LOOPS SHALL BE IDENTIFIED PER LANE AND DIRECTION AS PER STANDARD SPECIFICATIONS.
4. ALL SIDE BY SIDE 6'x6' LOOPS TO BE CONNECTED IN SERIES (START TO FINISH TO START TO FINISH, ETC.).

LOOP INSTALLATION NOTES

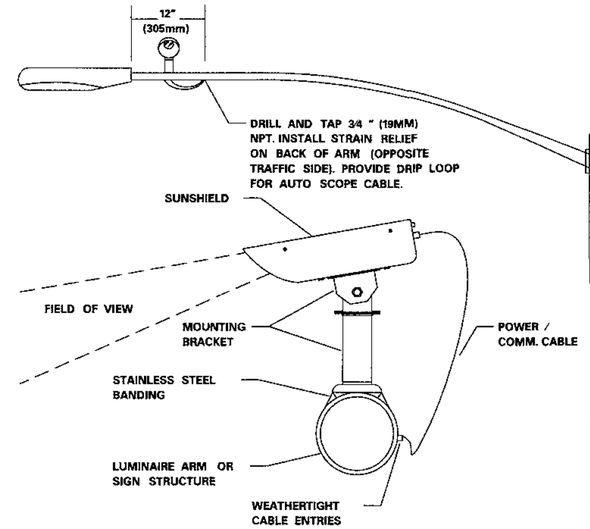

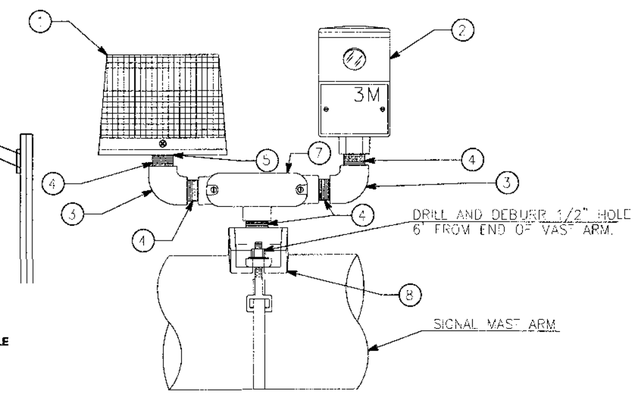

LIST OF MATERIALS		
ITM.	QTY.	DESCRIPTION
1	1	WHELAN STROBE LIGHT (P/N 1S3220LC OR 1S3220L)*
2	1	3M OPTICOM DETECTOR (P/N 721 OR 722)*
3	2	3/4" GALVANIZED 90 ELBOWS
4	5	3/4" GALVANIZED CLOSE NIPPLE
5	1	1" - 3/4" REDUCER
6	10	3/4" LOCKNUTS
7	1	3/4" TB CONDUIT
8	1	PELCO ABO155 29

* AS PER PLAN

VIDEO DETECTION SYSTEM AUTO SCOPE INSTALLATION
N.T.S.

PRE-EMPTION MOUNTING ASSEMBLY DETAIL
N.T.S.

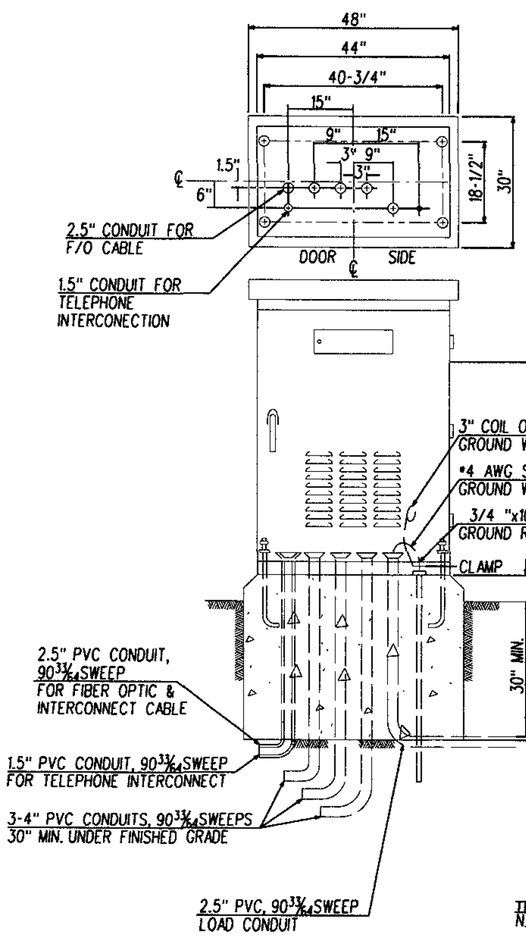

TRAFFIC SIGNAL ELECTRICAL SERVICE
N.T.S.

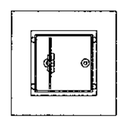

120/240 VOLT, 125 AMP. METERED ELECTRICAL SERVICE DISCONNECT PEDESTAL, MYERS MEUG16-W/TB

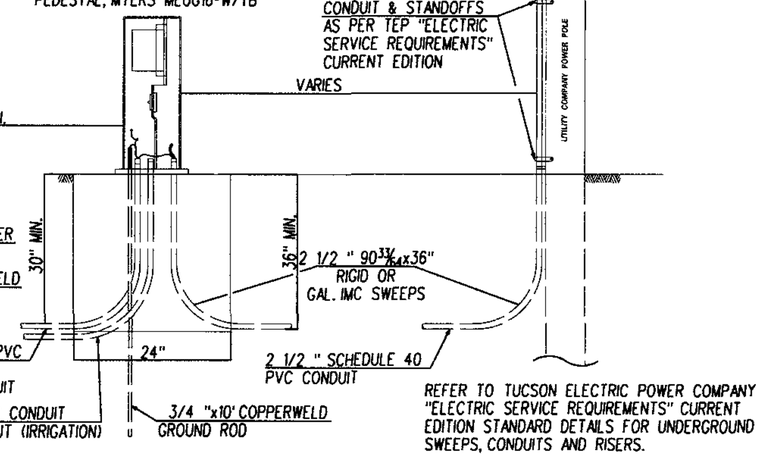

REFER TO TUCSON ELECTRIC POWER COMPANY "ELECTRIC SERVICE REQUIREMENTS" CURRENT EDITION STANDARD DETAILS FOR UNDERGROUND SWEEPS, CONDUITS AND RISERS.

IF PCDOT PROVIDES THE CONTROL CABINET, PCDOT WILL PROVIDE THE CONTRACTOR WITH THE ANCHOR BOLTS FOR THE FOUNDATION. IF PCDOT PROVIDES THE ELECTRIC SERVICE PEDESTAL, PCDOT WILL PROVIDE THE CONTRACTOR WITH THE ANCHOR BOLTS FOR THE FOUNDATION.

THREE 3/4 "x10' COPPERWELD GROUND RODS REQUIRED: 1-CONTROL CABINET, 1-SERVICE PEDESTAL AND 1-#7 PULL BOX NEAREST THE CONTROL CABINET. ALL GROUND RODS TO BE CONNECTED TOGETHER WITH #4 AWG SOLID COPPER WIRE.

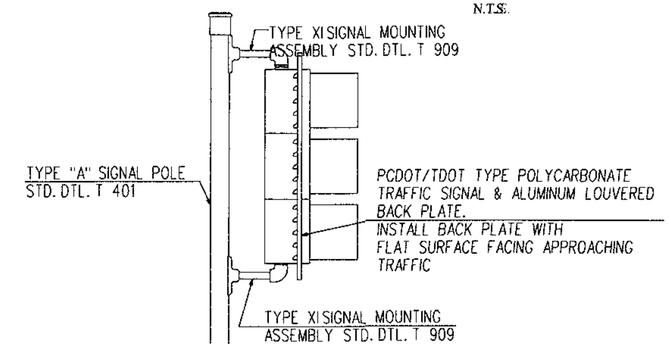

PCDOT A POLE SIGNAL MOUNTING ASSEMBLY & BACKPLATE ORIENTATION
N.T.S.

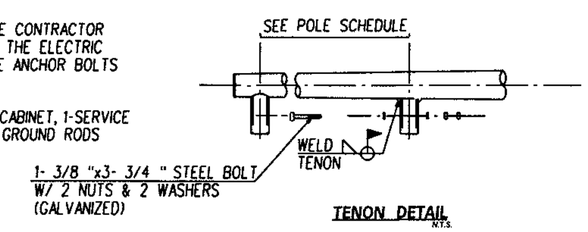

TENON DETAIL
N.T.S.

Arizona Blue Stake
1-800-STAKE-IT
1-800-782-5348
Call Two Working Days Before You Dig

Pima County Department of Transportation

LA CHOLLA BLVD.
RUTHRAUFF RD. TO RIVER RD.
TRAFFIC SIGNAL DETAIL SHEET

HDR Engineering, Inc.
5210 East Williams Circle, Suite 530
Tucson, AZ 85711-4459
(520) 584-3600

Registered Professional Engineer
Certificate No. 25955
MICHAEL J. BARTON
Expires 03-31-2010

No.	Revision Description	Engineer	Date

Designed	J. Cruz		July/2009
Drawn	J. Cruz		July/2009
Checked	M. Barton		July/2009
Proj. Engr.	M. Barton		July/2009

Priscilla S. Cornelio, P.E., Director

Scales	N.T.S.	Sheet	SL6 of SL12	Page	181 of 356

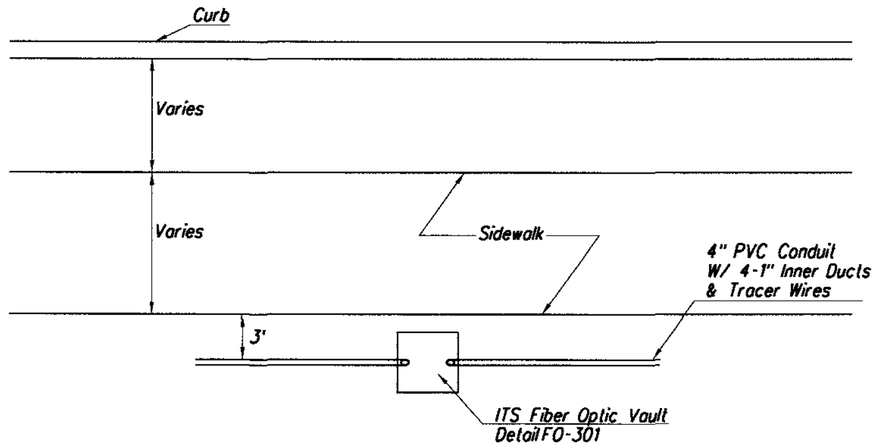

PLAN VIEW
N.T.S.

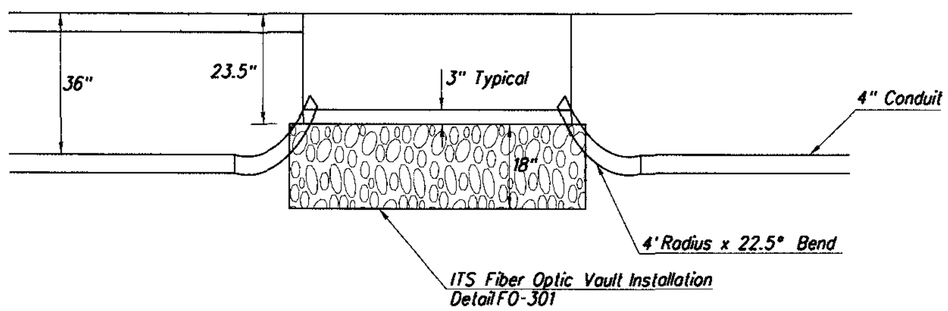

PROFILE
N.T.S.

ITS CONDUIT DESIGN GUIDELINES

1. THE PIMA COUNTY ITS CONDUIT DESIGN GUIDELINES AND ASSOCIATED SPECIAL PROVISIONS ARE BASED UPON THE CITY OF TUCSON DEPARTMENT OF OPERATIONS TECHNICAL PLANNING AND RESOURCES DIVISION SECTION 975 - TELECOMMUNICATIONS INFRASTRUCTURE RECOMMENDATIONS.
2. THE INTENT OF THE ITS CONDUIT DESIGN IS FOR FUTURE FIBER OPTIC USE THROUGHOUT PIMA COUNTY.
3. A SET OF SPECIAL PROVISIONS (SECTION 975 - TELECOMMUNICATIONS INFRASTRUCTURE) IS PROVIDED ON SHEET 7-01 AND INCLUDES ALL OF THE REQUIREMENTS FOR EQUIPMENT AND CONSTRUCTION OF THE ITS CONDUIT SYSTEM. ADDITIONAL STANDARD DETAILS ARE INCLUDED ON SHEETS 7-02 THROUGH 7-04.
4. THE PROVIDED SPECIAL PROVISIONS INCLUDE DESIGN REQUIREMENTS AND FOR A 4" PVC ITS CONDUIT SYSTEM AND THAT IS INNERDUCT READY AS WELL AS A 4" PVC WITH 4-1" INNERDUCT ITS CONDUIT SYSTEM THAT IS CABLE READY. THE DECISION AS TO WHICH SYSTEM IS USED WILL BE MADE ON A PER PROJECT BASIS.
5. THE ITS CONDUIT SYSTEM CAN CONTAIN PVC FIELD BENDS WITH MINIMUM RADII OF 50 FEET OR GREATER AND 30 DEGREES OR LESS. FACTORY BENDS CAN BE USED FOR SMALLER RADII WHEN NECESSARY. FACTORY BENDS MUST BE MANUFACTURED OUT OF PVC OR RIGID STEEL CONDUIT PER THE SPECIAL PROVISIONS PROVIDED.
6. THE GENERAL ITS CONDUIT SYSTEM LAYOUT REQUIRES PULL BOXES OR VAULTS TO BE PLACED A MAXIMUM OF 600' APART. THE COMPLETED 4" CONDUIT SYSTEM WILL BE REQUIRED TO RUN A 3¾" MANDREL.

ITS GENERAL NOTES

1. PROVIDE 4" PVC CONDUIT BETWEEN BACK OF CURB AND FAR EDGE OF SIDEWALK FOR FUTURE INTELLIGENT TRANSPORTATION SYSTEM (ITS) USE. INSTALL PER PCDOT TRAFFIC ENGINEERING DIVISION STREET LIGHTING AND INTELLIGENT TRANSPORTATION SYSTEM (ITS) CONDUIT DESIGN MANUAL DETAIL NO. FO-100, SHEET 5 OF 6. (REFER TO SPECIAL PROVISION SECTION 975 FOR ADDITIONAL INFORMATION).
2. PROVIDE 4" PVC CONDUIT AROUND INTERSECTION AS SHOWN FOR FUTURE INTELLIGENT TRANSPORTATION SYSTEM (ITS) USE. COORDINATE INTELLIGENT TRANSPORTATION SYSTEM (ITS) RACEWAY INSTALLATION WITH TRAFFIC SIGNAL RACEWAY INSTALLATION. INSTALL PER PCDOT TRAFFIC ENGINEERING DIVISION STREET LIGHTING AND INTELLIGENT TRANSPORTATION SYSTEM (ITS) CONDUIT DESIGN MANUAL DETAIL NO. FO-100, SHEET 5 OF 6. (REFER TO SPECIAL PROVISION SECTION 975 FOR ADDITIONAL INFORMATION).
3. PROVIDE 4" PVC CONDUIT ACROSS ROADWAY AS SHOWN FOR FUTURE INTELLIGENT TRANSPORTATION SYSTEM (ITS) USE. COORDINATE INTELLIGENT TRANSPORTATION SYSTEM (ITS) RACEWAY INSTALLATION WITH TRAFFIC SIGNAL RACEWAY INSTALLATION. INSTALL PER PCDOT TRAFFIC ENGINEERING DIVISION STREET LIGHTING AND INTELLIGENT TRANSPORTATION SYSTEM (ITS) CONDUIT DESIGN MANUAL DETAIL NO. FO-100, SHEET 5 OF 6. (REFER TO SPECIAL PROVISION SECTION 975 FOR ADDITIONAL INFORMATION).
4. PROVIDE RIGID STEEL CONDUIT FOR ALL BENDS INSTALLED IN FUTURE INTELLIGENT TRANSPORTATION SYSTEM (ITS) USE. COORDINATE INTELLIGENT TRANSPORTATION SYSTEM (ITS) RACEWAY INSTALLATION WITH TRAFFIC SIGNAL RACEWAY INSTALLATION. INSTALL PER PCDOT TRAFFIC ENGINEERING DIVISION STREET LIGHTING AND INTELLIGENT TRANSPORTATION SYSTEM (ITS) CONDUIT DESIGN MANUALDETAIL NO. FO-100, SHEET 5 OF 6. (REFER TO SPECIAL PROVISION SECTION 975 FOR ADDITIONAL INFORMATION).
5. ENCASE FO RACEWAY IN CLASS B CONCRETE WHERE RACEWAY IS INSTALLED BENEATH THE STREET PAVEMENT. (REFER TO SPECIAL PROVISIONS FOR ADDITIONAL REQUIREMENTS FOR CONCRETE COMPOSITION.
6. PROVIDE 48"W X 48"L X 50"D (NOM.) FO VAULT IN LOCATION SHOWN FOR FUTURE INTELLIGENT TRANSPORTATION SYSTEM (ITS) USE. INSTALL PER DETAIL FO-301, SHEET 7-04. (REFER TO SPECIAL PROVISION SECTION 975 FOR ADDITIONAL INFORMATION).
7. INTELLIGENT TRANSPORTATION SYSTEM (ITS) VAULTS SHALL NOT BE PLACED INSIDE AREAS DESIGNATED FOR EQUESTRIAN PADS OR PUBLIC USE TRAILS.
8. CORRDINATE INSTALLATION OF ALL INTELLIGENT TRANSPORTATION SYSTEM (ITS) PULL BOXES, TO BE INSTALLED AT THE INTERSECTION, WITH THE TRAFFIC SIGNAL PULL BOX LOCATIONS (REFER TO TRAFFIC SIGNAL PLANS).

ITS/STREET LIGHTING NOTES

Arizona Blue Stake
1-800-STAKE-IT
1-800-782-5348
Call Two Working Days Before You Dig

No.	Revision Description	Engineer	Date

		Date
Designed	J. Cruz	July/2009
Drawn	J. Cruz	July/2009
Checked	M. Barton	July/2009
Proj. Engr.	M. Barton	July/2009

Priscilla S. Cornelio, P.E., Director

Registered Professional Engineer (Civil) CERTIFICATE NO. 25955 MICHAEL J. BARTON ARIZONA U.S.A.
Expires 03-31-2010

HDR Engineering, Inc.
5210 East Williams Circle, Suite 530
Tucson, AZ 85711-4459
(520) 584-3600

Pima County Department of Transportation

LA CHOLLA BLVD.
RUTHRAUFF RD. TO RIVER RD.
STREET LIGHTING AND ITS PLANS
FOR LA CHOLLA BLVD.

Scales	N.T.S.	Sheet	SL 7 of SL 12	Page	182 of 356

012145
0000000000059914
Pima_County_Dept_of_Transportation\PCDOT-La_Cholla_Blvd-Ruthrauff\13.00_CAD\Construction_Documents\Civil\3DC_06.dgn

08\20\09 4:59:28 PM aledesma

Project # 4LCITR 4LCITR

1. Install a new 4" Fiber Optic Conduit with 4 - 1" color-coded inner-ducts and a 2" Future Street lighting Conduit in the same trench. Refer to Detail FO-100, Sheet No. 7-02 of PCDOT Traffic Engineering Division's Street Lighting & ITS Conduit Design Manual. The 4" Fiber Optic Conduit shall have a #6 AWG tracer wire.

2. At the bridge abutment the 4" Fiber optic and 2" Future Street Lighting conduit shall transition from PVC to rigid metal conduit. The rigid metal conduits will extend through the abutment an be suspended with hangers under the bridge. Where the rigid metallic conduit is buried underground, it will need to wrapped or treated with PVC tape to prevent corrosion, see special provisions.

3. Supply new Fiber Optic #9 Vault refer to Detail FO-301, Sheet No. 7-04 of PCDOT Traffic Engineering Division's Street Lighting & ITS Conduit Design Manual.

4. Refer to traffic signal plans for additional information on the placement of ITS and Street Lighting conduits related to the traffic signal.

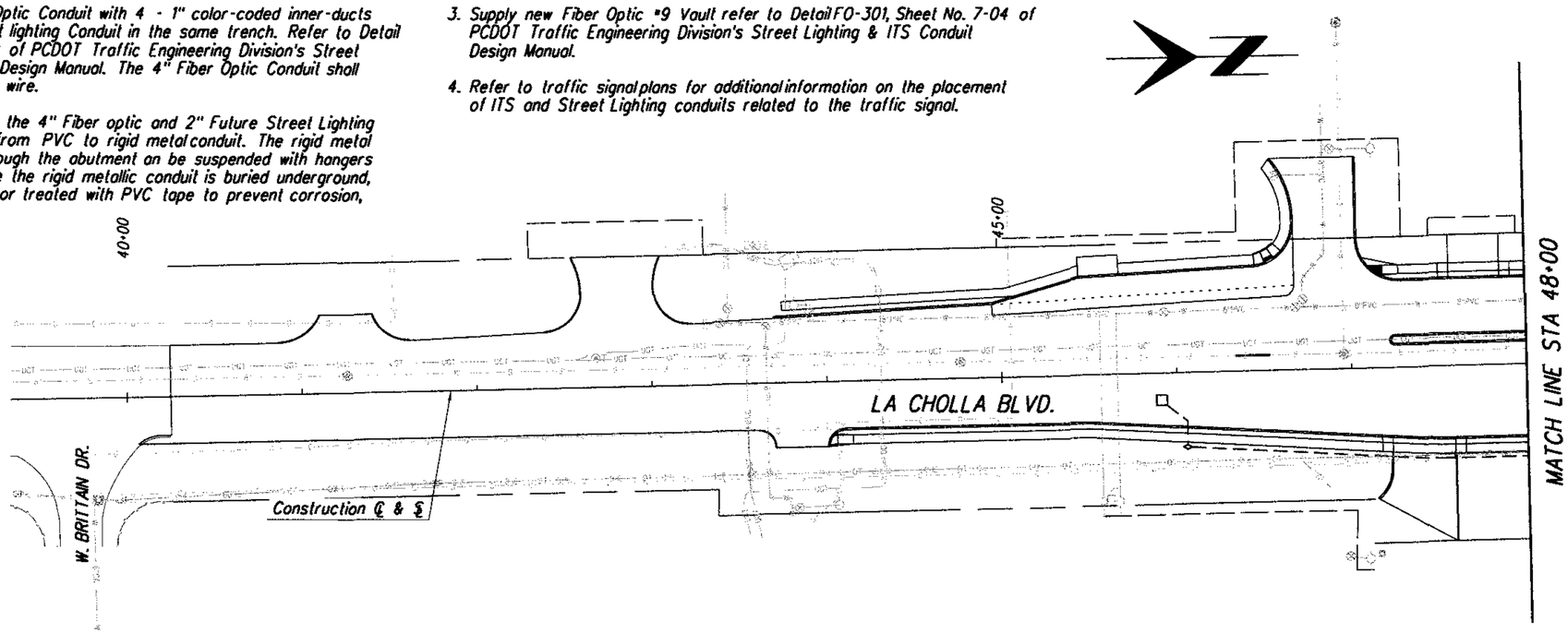

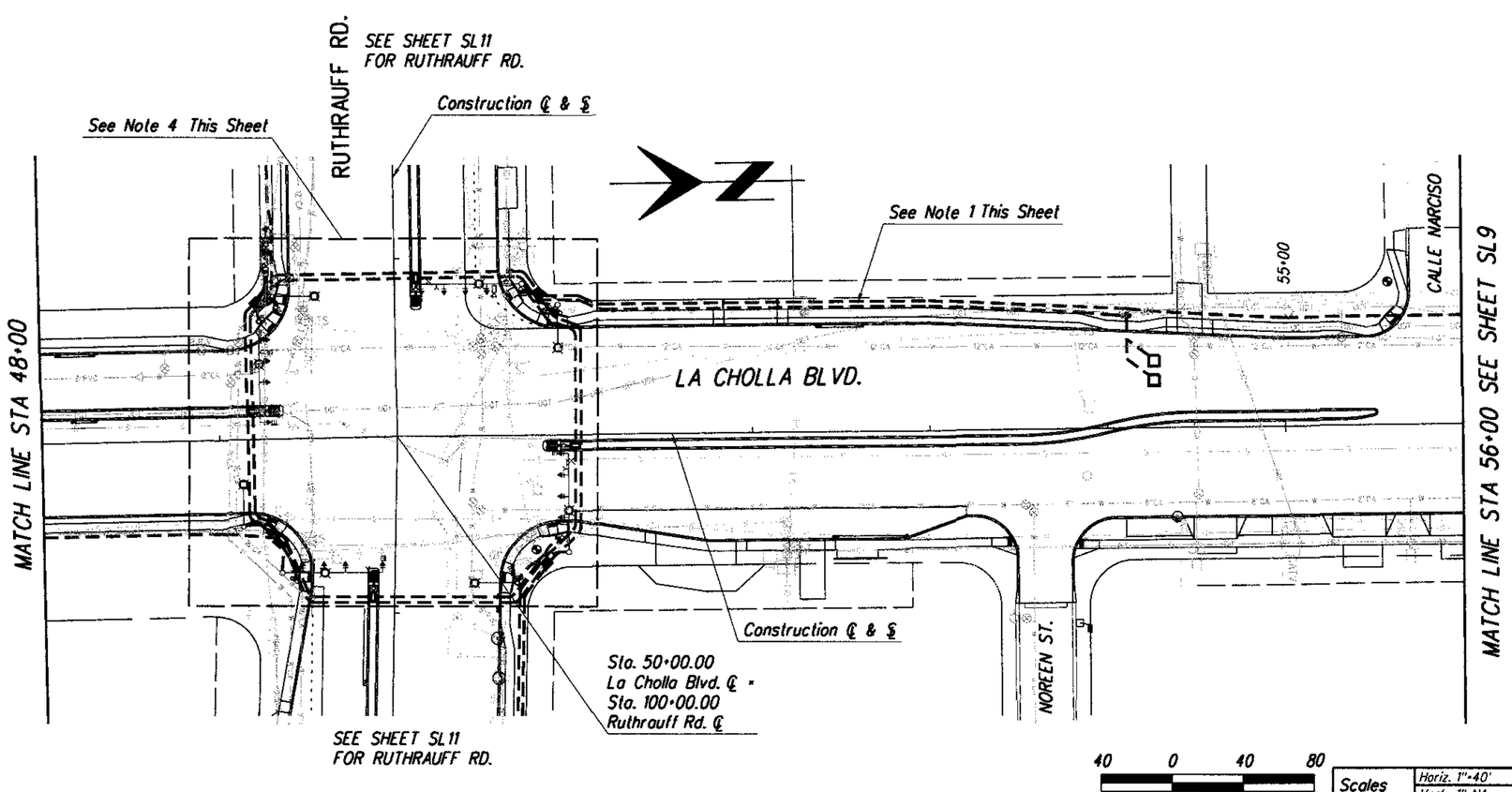

40 0 40 80

Arizona Blue Stake
1-800-STAKE-IT
1-800-782-5348
Call Two Working Days Before You Dig

Scales	Horiz. 1"=40' Vert. 1"=NA	Sheet	SL8 of SL12	Page	183 of 356

Pima County Department of Transportation

LA CHOLLA BLVD.
RUTHRAUFF RD. TO RIVER RD.
STREET LIGHTING AND ITS PLANS
FOR LA CHOLLA BLVD.

HDR Engineering, Inc.
5210 East Williams Circle, Suite 530
Tucson, AZ 85711-4459
(520) 584-3600

Expires 03-31-2010

No.	Revision Description	Engineer	Date

		Date
Designed	J. Cruz	July/2009
Drawn	J. Cruz	July/2009
Checked	M. Barton	July/2009
Proj. Engr.	M. Barton	Aug/2009

Priscilla S. Cornelio, P.E., Director

012145
00000000035914
Pima_County_Dept_of_Transportation\PCDOT-La_Cholla_Blvd Ruthrauff\13.00_CAD\Construction_Documents\Civil\30C-07.dgn

08\20\09 4:59:33 PM aledesma

Project # 4LCITR 4LCITR

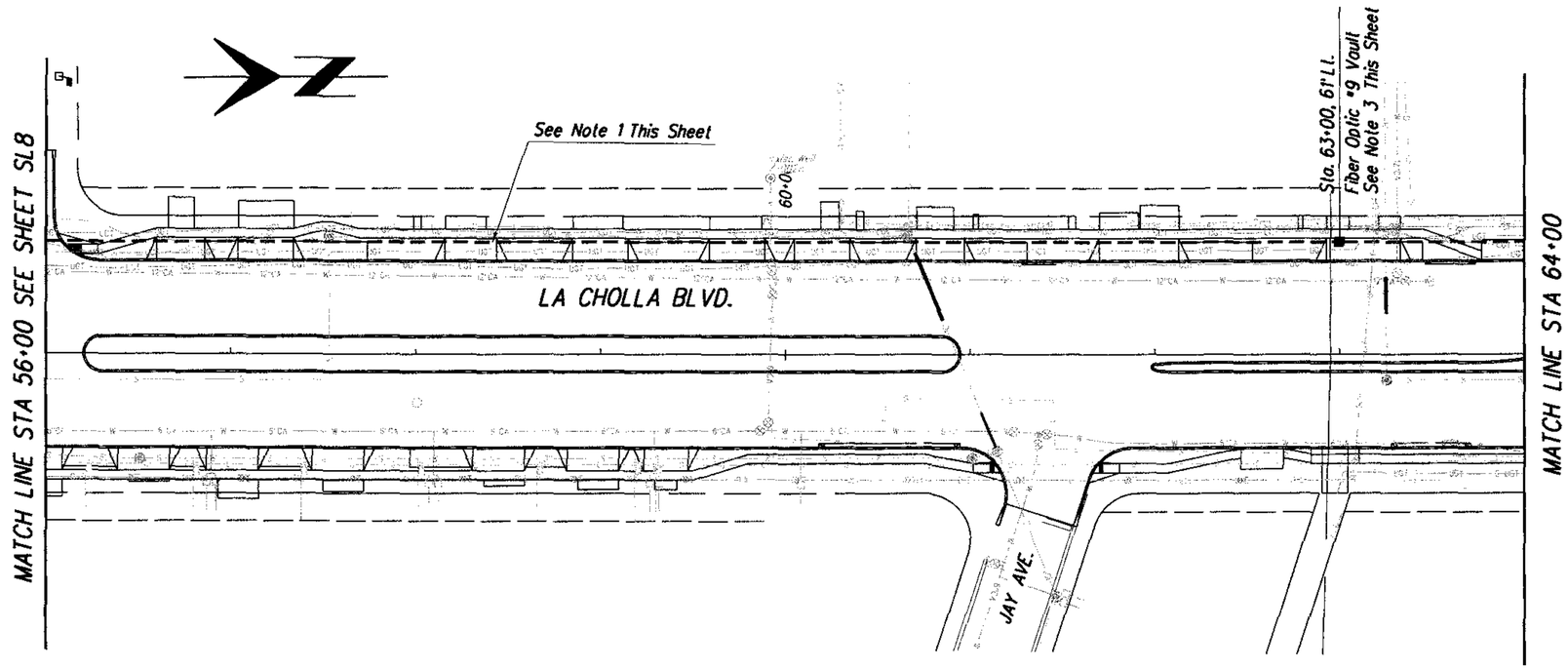

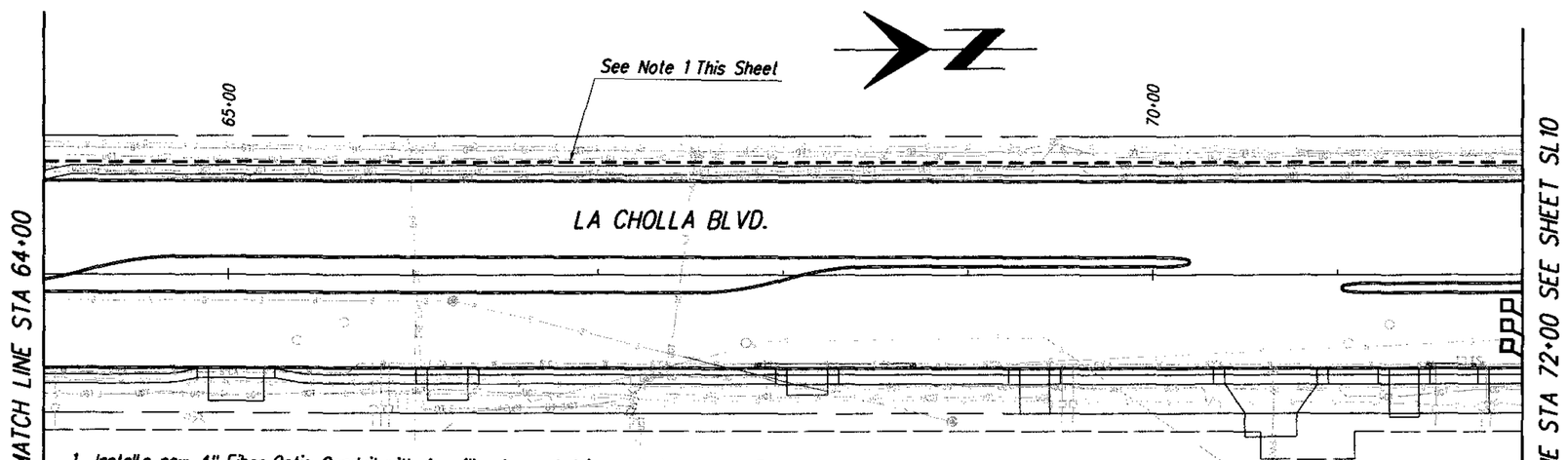

1. Install a new 4" Fiber Optic Conduit with 4 - 1" color-coded inner-ducts and a 2" Future Street lighting Conduit in the same trench. Refer to Detail FO-100, Sheet No. 7-02 of PCDOT Traffic Engineering Division's Street Lighting & ITS Conduit Design Manual. The 4" Fiber Optic Conduit shall have a #6 AWG tracer wire.

2. At the bridge abutment the 4" Fiber optic and 2" Future Street Lighting conduit shall transition from PVC to rigid metal conduit. The rigid metal conduits will extend through the abutment an be suspended with hangers under the bridge. Where the rigid metallic conduit is buried underground, it will need to wrapped or treated with PVC tape to prevent corrosion, see special provisions.

3. Supply new Fiber Optic #9 Vault refer to Detail FO-301, Sheet No. 7-04 of PCDOT Traffic Engineering Division's Street Lighting & ITS Conduit Design Manual.

4. Refer to traffic signal plans for additional information on the placement of ITS and Street Lighting conduits related to the traffic signal.

40 0 40 80

Arizona Blue Stake
1-800-STAKE-IT
1-800-782-5348
Call Two Working Days Before You Dig

Priscilla S. Cornelio, P.E., Director

No.	Revision Description	Engineer	Date

		Date
Designed	J. Cruz	July/2009
Drawn	J. Cruz	July/2009
Checked	M. Barton	July/2009
Proj. Engr.	M. Barton	Aug/2009

Registered Professional Engineer (Civil) CERTIFICATE NO. 23955 MICHAEL J. BARTON DATE SIGNED 8-28-2009 ARIZONA U.S.A.
Expires 03-31-2010

HDR
HDR Engineering, Inc.
5210 East Williams Circle, Suite 530
Tucson, AZ 85711-4459
(520) 584-3600

Pima County Department of Transportation

LA CHOLLA BL VD.:
RUTHRAUFF RD. TO RIVER RD.
STREET LIGHTING AND ITS PLANS
FOR LA CHOLLA BL VD.

Scales	Horiz. 1"=40' Vert. 1"=NA	Sheet	SL9 of SL12	Page	184 of 356

Project # 4LCITR

4LCITR

012145
0000000005994
Pima_County_Dept._of_Transportation\PCDOT-La_Cholla_Blvd-Ruthrauff\13.00_CAD\Construction_Documents\Civil\30C-08.dgn

08\20\09 4:59:39 PM aledesma

1. Install a new 4" Fiber Optic Conduit with 4 - 1" color-coded inner-ducts and a 2" Future Street lighting Conduit in the same trench. Refer to Detail FO-100, Sheet No. 7-02 of PCDOT Traffic Engineering Division's Street Lighting & ITS Conduit Design Manual. The 4" Fiber Optic Conduit shall have a #6 AWG tracer wire.

2. At the bridge abutment the 4" Fiber optic and 2" Future Street Lighting conduit shall transition from PVC to rigid metal conduit. The rigid metal conduits will extend through the abutment an be suspended with hangers under the bridge. Where the rigid metallic conduit is buried underground, it will need to wrapped or treated with PVC tape to prevent corrosion, see special provisions.

3. Supply new Fiber Optic #9 Vault refer to Detail FO-301, Sheet No. 7-04 of PCDOT Traffic Engineering Division's Street Lighting & ITS Conduit Design Manual.

4. Refer to traffic signal plans for additional information on the placement of ITS and Street Lighting conduits related to the traffic signal.

5. Install a new 4" Rigid Metal Fiber Optic Conduit with 4 - 1" color-coded inner-ducts and a 2" Rigid Metal Future Street lighting Conduit suspended beneath the bridge deck.

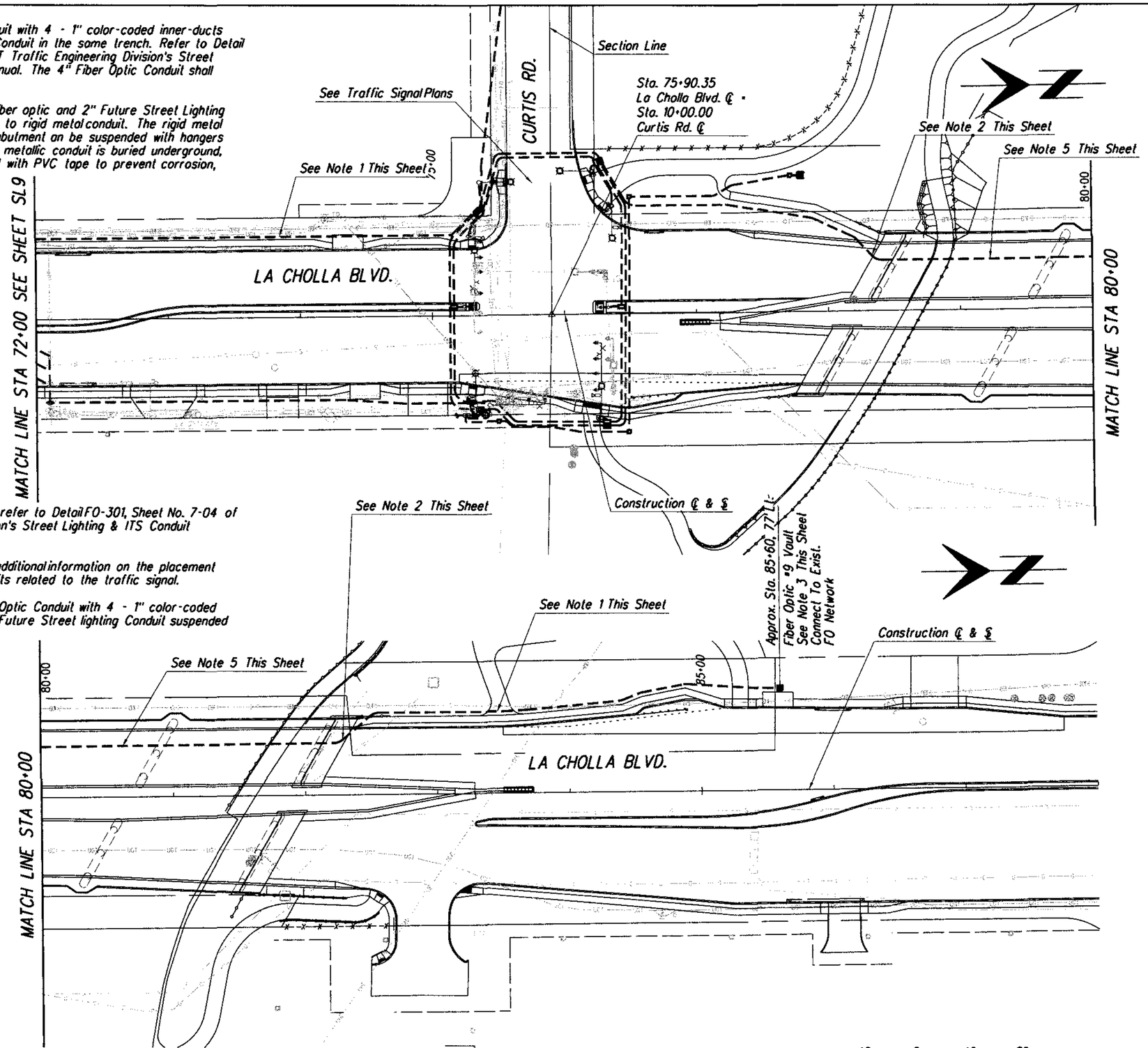

40 0 40 80

Arizona Blue Stake
1-800-STAKE-IT
1-800-782-5348
Call Two Working Days Before You Dig

Scales	Horiz. 1"=40' Vert. 1"=NA	Sheet	SL10 of SL12	Page	185 of 356

Project # 4LCITR

Pima County Department of Transportation

Priscilla S. Cornelio, P.E., Director

LA CHOLLA BLVD.: RUTHRAUFF RD. TO RIVER RD. STREET LIGHTING AND ITS PLANS FOR LA CHOLLA BLVD.

HDR Engineering, Inc.
5210 East Williams Circle, Suite 530
Tucson, AZ 85711-4459
(520) 584-3600

Registered Professional Engineer (Civil) CERTIFICATE NO. 25955 MICHAEL J. BARTON Date Signed 08-13-2009 Expires 03-31-2010

Designed	J. Cruz	July/2009
Drawn	J. Cruz	July/2009
Checked	M. Barton	July/2009
Proj. Engr.	M. Barton	Aug/2009

No.	Revision Description	Engineer	Date

012145
0000000000005994
Pima_County_Dept_of_Transportation\PCDOT-La_Cholla_Blvd-Ruthrauff\13.00_CAD\Construction_Documents\Civil\30C_09.dgn

08\20\09 4:59:44 PM aledesma

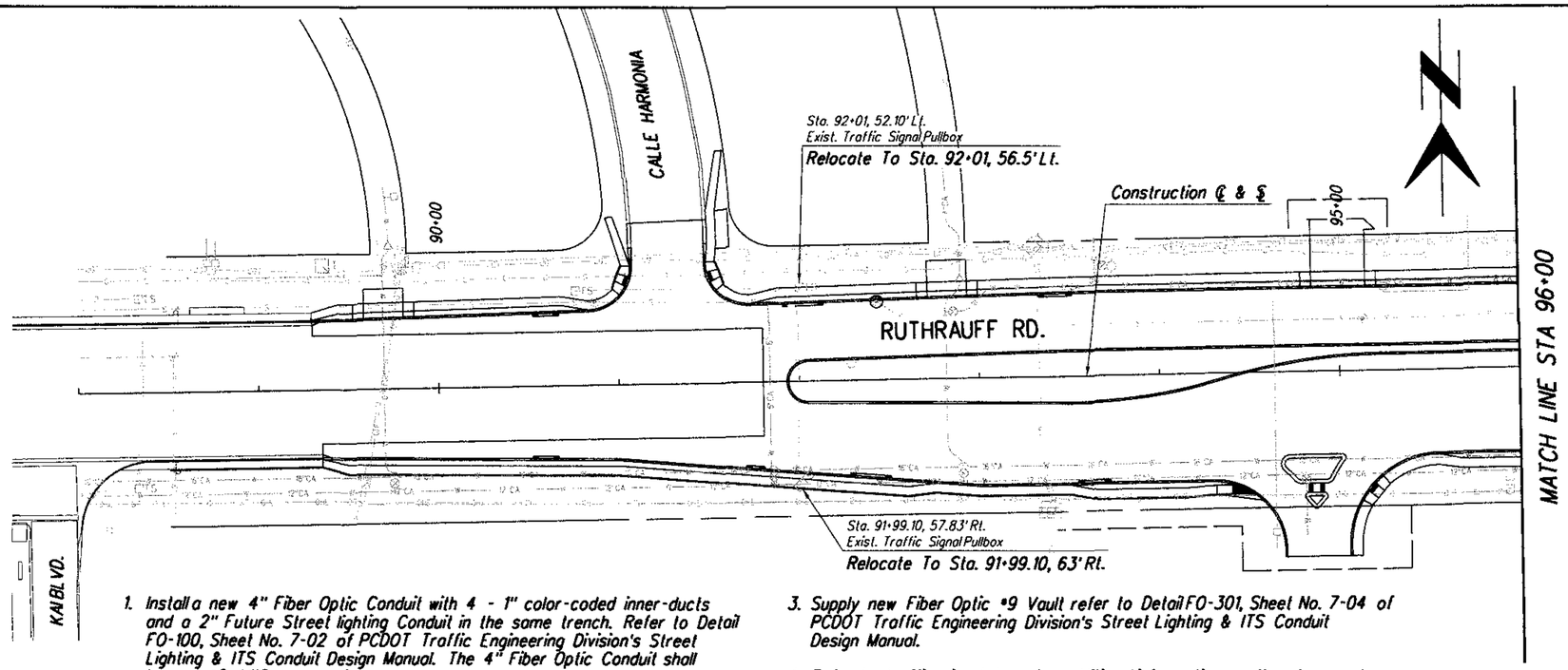

1. Install a new 4" Fiber Optic Conduit with 4 - 1" color-coded inner-ducts and a 2" Future Street lighting Conduit in the same trench. Refer to Detail FO-100, Sheet No. 7-02 of PCDOT Traffic Engineering Division's Street Lighting & ITS Conduit Design Manual. The 4" Fiber Optic Conduit shall have a #6 AWG tracer wire.

2. At the bridge abutment the 4" Fiber optic and 2" Future Street Lighting conduit shall transition from PVC to rigid metal conduit. The rigid metal conduits will extend through the abutment an be suspended with hangers under the bridge. Where the rigid metallic conduit is buried underground, it will need to wrapped or treated with PVC tape to prevent corrosion, see special provisions.

3. Supply new Fiber Optic #9 Vault refer to Detail FO-301, Sheet No. 7-04 of PCDOT Traffic Engineering Division's Street Lighting & ITS Conduit Design Manual.

4. Refer to traffic signal plans for additional information on the placement of ITS and Street Lighting conduits related to the traffic signal.

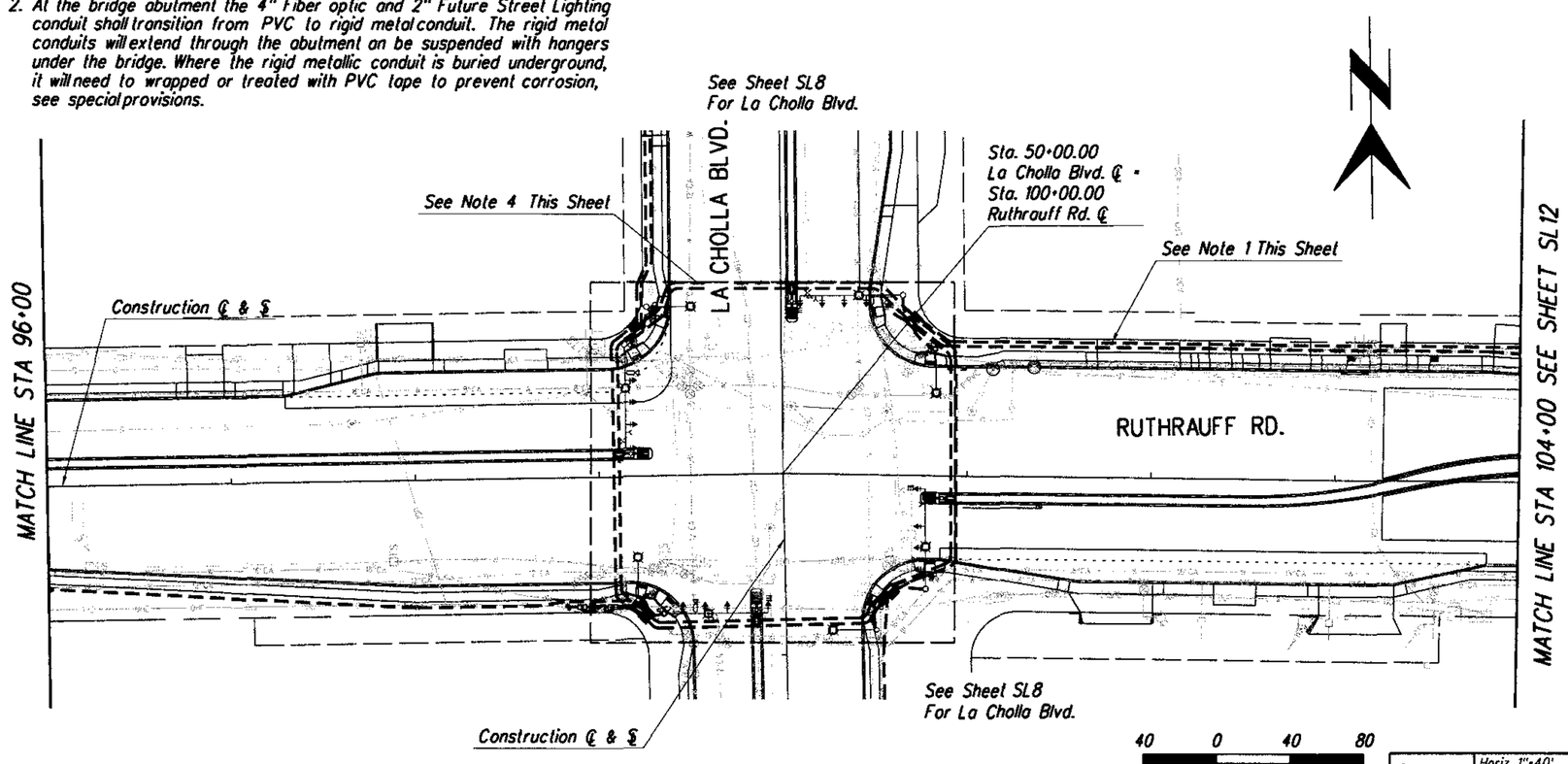

Arizona Blue Stake
1-800-STAKE-IT
1-800-782-5348
Call Two Working Days Before You Dig

Scales	Horiz. 1"=40' Vert. 1"=NA	Sheet SL11 of SL12	Page 186 of 356

Project # 4LCITR 4LCITR

Pima County Department of Transportation

LA CHOLLA BLVD.: RUTHRAUFF RD. TO RIVER RD. STREET LIGHTING AND ITS PLANS FOR RUTHRAUFF RD.

HDR Engineering, Inc.
5210 East Williams Circle, Suite 530
Tucson, AZ 85711-4459
(520) 584-3600

Registered Professional Engineer (Civil) CERTIFICATE NO. 25955 MICHAEL J. BARTON Date Signed 8-24-2009 Expires 03-31-2010

No.	Revision Description	Engineer	Date

		Date
Designed	J. Cruz	July/2009
Drawn	J. Cruz	July/2009
Checked	M. Barton	July/2009
Proj. Engr.	M. Barton	Aug/2009

Priscilla S. Cornelio, P.E., Director

012145
00000000005994
Pima_County_Dept_of_Transportation\PCDOT-La_Cholla_Blvd-Ruthrauff\13.00_CAD\Construction_Documents\Civil\30C-10.dgn

08\20\09 4:59:50 PM aledesma

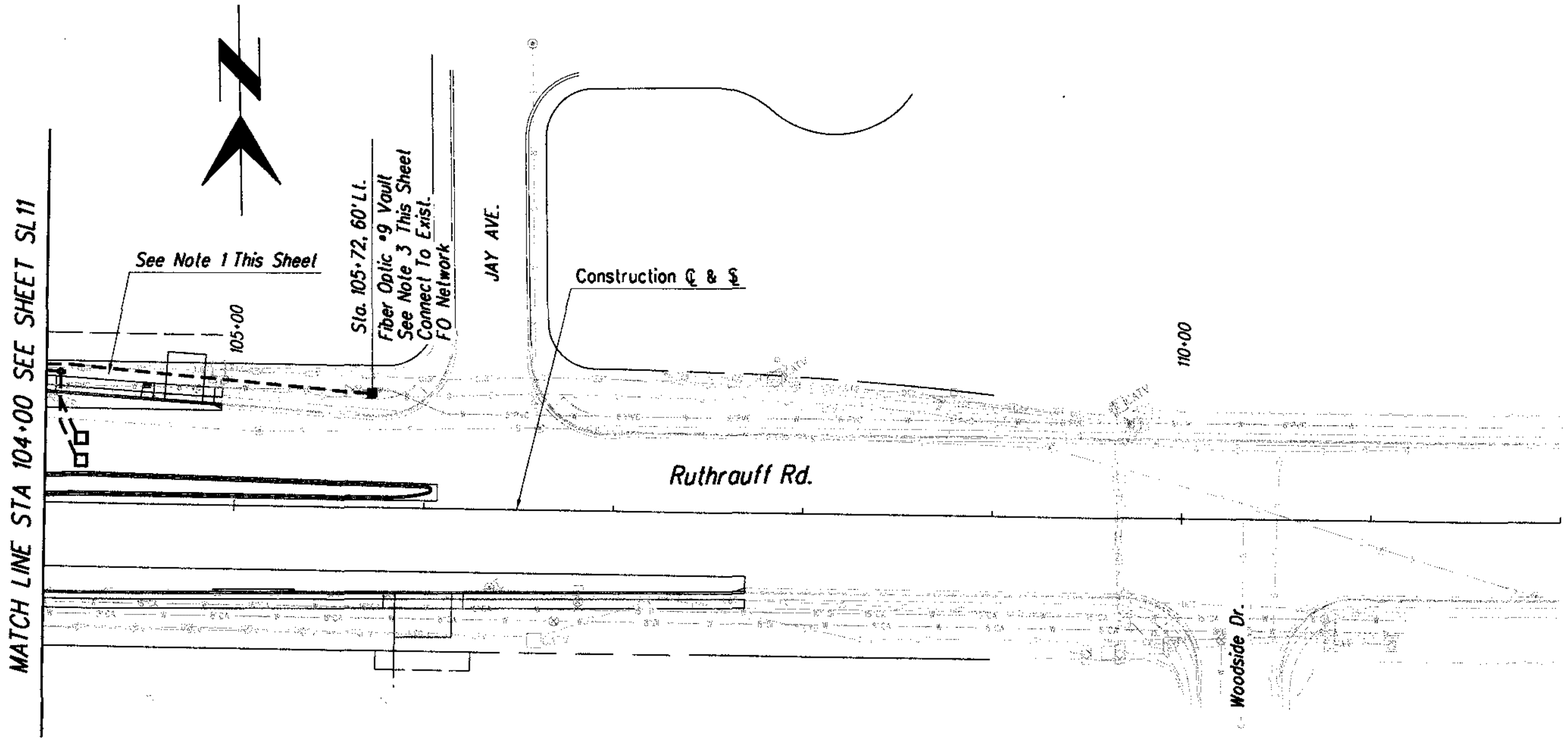

1. Install a new 4" Fiber Optic Conduit with 4 - 1" color-coded inner-ducts and a 2" Future Street lighting Conduit in the same trench. Refer to Detail FO-100, Sheet No. 7-02 of PCDOT Traffic Engineering Division's Street Lighting & ITS Conduit Design Manual. The 4" Fiber Optic Conduit shall have a #6 AWG tracer wire.

2. At the bridge abutment the 4" Fiber optic and 2" Future Street Lighting conduit shall transition from PVC to rigid metal conduit. The rigid metal conduits will extend through the abutment an be suspended with hangers under the bridge. Where the rigid metallic conduit is buried underground, it will need to wrapped or treated with PVC tape to prevent corrosion, see special provisions.

3. Supply new Fiber Optic #9 Vault refer to Detail FO-301, Sheet No. 7-04 of PCDOT Traffic Engineering Division's Street Lighting & ITS Conduit Design Manual.

4. Refer to traffic signal plans for additional information on the placement of ITS and Street Lighting conduits related to the traffic signal.

Arizona Blue Stake
1-800-STAKE-IT
1-800-782-5348
Call Two Working Days Before You Dig

40 0 40 80

Scales	Horiz. 1"=40' Vert. 1"=NA	Sheet SL12 of SL12	Page 187 of 356

Pima County Department of Transportation

Priscilla S. Cornelio, P.E., Director

LA CHOLLA BLVD.:
RUTHRAUFF RD. TO RIVER RD.
STREET LIGHTING AND ITS PLANS
FOR RUTHRAUFF RD.

HDR Engineering, Inc.
5210 East Williams Circle, Suite 530
Tucson, AZ 85711-4459
(520) 584-3600

Registered Professional Engineer
CERTIFICATE NO. 25655
MICHAEL J. BARTON
Date Signed 8-31-2009
Arizona, U.S.A.
Expires 03-31-2010

No.	Revision Description	Engineer	Date

		Date
Designed	J. Cruz	July/2009
Drawn	J. Cruz	July/2009
Checked	M. Barton	July/2009
Proj. Engr.	M. Barton	Aug/2009

012145
0000000000059914
Pima_County_Dept_of_Transportation\PCDOT-La_Cholla_Blvd-Ruthrauff\13.02_CAD\Construction_Documents\Civil\30C-11.dgn

08\20\09 4:59:56 PM aledesma

Project • 4LCITR

McGann & Associates Inc.
Landscape Architects and Planners

6814 North Oracle Road, Suite 210 Tucson, Arizona 85704
Telephone: (520) 297-9540 Fax: (520) 297-9545

PIMA COUNTY DEPARTMENT OF TRANSPORTATION
201 N. STONE AVE.
TUCSON, AZ 85726
PHONE: (520) 470-6500

NATIVE PLANT PRESERVATION PLAN
LA CHOLLA BOULEVARD
RUTHRAUFF ROAD TO RIVER ROAD

LOCATION MAP

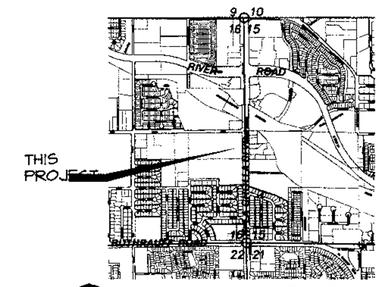

North

A PORTION OF SECTION 10
T. 13 S., R. 13 E
G.&S.R.B.&M., PIMA COUNTY, ARIZONA
SCALE: 3" = 1 MILE

NATIVE PLANT PRESERVATION PLAN MITIGATION SUMMARY TABLE

SPECIES	INVENTORIED QUANTITY OF VIABLE PLANTS (PLANTS RATED LOW, MEDIUM, AND HIGH VIABILITY)	INVENTORIED QUANTITY OF LOW VIABILITY PLANTS	INVENTORIED QUANTITY OF MEDIUM AND HIGH VIABILITY PLANTS (SPECIMEN PLANTS)	PERCENTAGE OF SPECIMEN PLANTS ON SITE	QUANTITY TO BE PRESERVED-IN-PLACE (PIP)	QUANTITY TO BE TRANSPLANTED ON-SITE (TOS)	QUANTITY OF SPECIMEN PLANTS TO BE REMOVED FROM SITE (RFS)	PERCENTAGE OF SPECIMEN PLANTS TO BE REMOVED FROM SITE	QUANTITY OF LOW VIABILITY PLANTS TO BE REMOVED FROM SITE	MITIGATION REQUIREMENT FOR TOS AND RFS SPECIMEN PLANTS	TOTAL PLANTS ON SITE AFTER COMPLETION
TREES											
Acacia greggii Catclaw Acacia	3	3	0	0%	0	0	0	0%	0	0	3
Cercidium floridum Blue Palo Verde	9	1	8	89%	4	0	4	50%	1	12	16
Chilopsis Linearis Desert Willow	8	4	4	50%	0	0	4	100%	3	12	13
Prosopis Velutina Velvet Mesquite	11	6	5	45%	1	0	4	80%	3	12	16
CACTI/SUCCULENTS											
Carnegiea gigantea Saguaro	1	0	1	100%	0	1	0	0.0%	0	1	2
TOTAL	32	14	18		5	1	12		7	37	50

INDEX TO DRAWINGS

N-1	COVER SHEET, SUMMARY TABLE & NOTES
N-2	NATIVE PLANT INVENTORY - AREA A-B
N-3	NATIVE PLANT INVENTORY - AREA C-D
N-4	NATIVE PLANT INVENTORY - AREA E
N-5	NATIVE PLANT INVENTORY - AREA F
N-6	NATIVE PLANT INVENTORY - AREA G-H
N-7	NATIVE PLANT INVENTORY - AREA I
N-8	NATIVE PLANT INVENTORY TABLE
RM-1	RIPARIAN HABITAT IMPACT SUMMARY

GENERAL NOTES:

1. TOTAL SITE AREA: 25 ACRES
2. TOTAL DISTURBED AREA: 20 ACRES
3. TOTAL UNDISTURBED NATURAL OPEN SPACE: 0 ACRES
4. TOTAL RIPARIAN HABITAT TO BE DISTURBED (BY ANY MEANS): 2.74 ACRES
5. THE METHOD UTILIZED TO COMPLY WITH NATIVE PLANT PRESERVATION REQUIREMENTS FOR THIS PROJECT IS THE SELECTIVE PLANT PRESERVATION METHOD, AS DESCRIBED IN SECTION 18.72.090 OF THE PIMA COUNTY ZONING CODE.
6. ANY RIPARIAN HABITAT MITIGATION REQUIREMENTS WILL BE SHOWN IN THE LANDSCAPE PLAN AND RIPARIAN HABITAT MITIGATION PLAN.
7. ALL AREAS DESIGNATED TO BE PRESERVED AS NATURAL OPEN SPACE SHALL BE FENCED FOR PROTECTION DURING CONSTRUCTION USING MINIMUM 4-FOOT HIGH ORANGE MESH BARRICADE FENCING. ALL PRESERVED IN PLACE, TRANSPLANTED AND SUPPLEMENTAL PLANTS WILL BE FENCED AT THE DRIP LINE. THE DRIP LINE FOR SAGUAROS WILL BE AT A RADIUS OF 1/4 OF THE HEIGHT OF THE PLANT.
8. GRADING SHALL NOT ENCROACH INTO NATURAL OPEN SPACE OR WITHIN THE DRIP LINE OF A PRESERVED, TRANSPLANTED OR SUPPLEMENTAL PROTECTED NATIVE PLANT.
9. THE OWNER (PIMA COUNTY DEPARTMENT OF TRANSPORTATION) IS RESPONSIBLE FOR INSURING THAT PROTECTIVE FENCING REMAINS THROUGHOUT THE CONSTRUCTION AND DEVELOPMENT PROCESS. THERE SHALL BE A "NO DISTURBANCE" STANDARD IN ALL NATURAL OPEN SPACE AREAS.
10. BEFORE THE ISSUING OF GRADING PERMITS, ALL VIABLE INVENTORIED PLANTS PROPOSED FOR PRESERVATION- IN-PLACE (PIP), SALVAGED AND TRANSPLANTED-ON-SITE (TOS), AND REMOVE FROM SITE (RFS), SHALL BE TAGGED WITH THEIR ASSIGNED NUMBERS, AND COLOR CODED AS RECOMMENDED BY THIS PRESERVATION PLAN (WHITE=PIP, BLUE=TOS, YELLOW=RFS). THE ASSIGNED MONITOR MUST PROVIDE A REPORT TO THE SUBDIVISION REVIEW SECTION OF THE PLANNING DIVISION THAT THE FENCING HAS BEEN PROPERLY INSTALLED.
11. THE NORTH SIDE OF ALL SAGUARO AND BARREL CACTI APPROVED FOR TRANSPLANTING SHALL BE MARKED PRIOR TO REMOVAL TO ENSURE PROPER ORIENTATION IN THE NEW LOCATION.
12. ALL NATIVE VEGETATION MITIGATION, SALVAGE AND PRESERVATION PLANS SHALL BE INTEGRATED INTO THE LANDSCAPE PLAN.
13. THE TENTATIVE AND FINAL PLATS, DEVELOPMENT PLAN, GRADING PLAN, AND ASSOCIATED LANDSCAPE PLAN INCLUDE NO RESTRICTIVE NOTES.
14. ANY CHANGES IN GRADING LIMITS OR DEVELOPMENT LAYOUT MUST BE SUBMITTED TO THE PLANNING DEPARTMENT TO DETERMINE IF A REVISED PRESERVATION PLAN WILL BE REQUIRED.
15. THERE WILL BE NO TEMPORARY PLANT NURSERY ESTABLISHED FOR THIS PROJECT. ALL TRANSPLANTS WILL BE ONE MOVE TRANSPLANTS.
16. PLANTS TRANSPLANTED IN A SINGLE MOVE WILL BE IMMEDIATELY CONNECTED TO EXISTING IRRIGATION.
17. MAINTENANCE OF ALL PLANTS TRANSPLANTED IN ONE MOVE (ONE 3 FT. TALL SAGUARO) SHALL BE THE RESPONSIBILITY OF CONTRACTOR DURING CONSTRUCTION AND MAINTENANCE PERIOD AND PIMA COUNTY NATURAL RESOURCES, PARKS AND RECREATION, AT THE END OF THE MAINTENANCE PERIOD.
18. THIS PRESERVATION PLAN SHALL ALSO BE IN CONFORMANCE WITH THE FEDERAL ENDANGERED SPECIES ACT, ARIZONA NATIVE PLANT LAW AND PIMA COUNTY NATIVE PLANT ORDINANCE. A REPORT IDENTIFYING EXISTING SAFEGUARDED SPECIES AND DISPOSITION SHALL BE INCLUDED.
19. THIS PROJECT WILL NOT BE OPEN FOR NATIVE PLANT HARVESTING PER STATE OF ARIZONA NATIVE PLANT LAWS.
20. ON SITE MONITORING OF ALL ASPECTS OF SITE/CONSTRUCTION AND GRADING SHALL BE PROVIDED AT THE EXPENSE OF THE OWNER (PCDOT), DURING CONSTRUCTION AND AT ONE YEAR AFTER FINAL INSPECTION, TO ENSURE THE PROTECTION OF PRESERVED PLANTS. MONITORING SHALL BE PERFORMED BY AN INDIVIDUAL QUALIFIED IN NATIVE PLANT IDENTIFICATION AND PROTECTION, AND BE APPROVED BY PIMA COUNTY.
21. A LANDSCAPE CONTRACTOR LICENSED IN THE STATE OF ARIZONA WILL PERFORM ALL SALVAGE AND TRANSPLANTING OPERATIONS.
22. ALL TRANSPLANTED SPECIMENS WILL BE IN GOOD HEALTH AND CONDITION, PLANTED IN ASSOCIATION WITH NURSE PLANTS WHEN REQUIRED TO ASSURE SURVIVABILITY, AND IRRIGATED AND MAINTAINED TO ENSURE THEIR SURVIVAL AND HEALTH FOR THE DURATION OF ANY STAY IN A TEMPORARY HOLDING AREA AND IN THEIR PERMANENT LOCATION ON-SITE. PRESERVED-IN-PLACE PLANTS MAY SERVE THE FUNCTION OF NURSE PLANTS.
23. CONTAINERIZED PLANTS USED TO MEET THE REQUIREMENTS OF CHAPTER 18.72 WILL BE PROTECTED WITH BROWSE CONTROL CAGES OR OTHER TECHNIQUES PROVEN EFFECTIVE IN DETERRING HERBIVORES AS APPROVED BY THE COUNTY. SEE DETAIL SHEET N-2.
24. ALL SALVAGED CACTI WILL BE TRANSPLANTED WITH THE SAME SUN ORIENTATION AS THEIR ORIGINAL LOCATION.
25. ALL LISTED PLANTS WILL BE PLANTED IN LOCATIONS ABLE TO SUPPORT THEIR LONG TERM HEALTH AND SURVIVAL AND IN DENSITIES AND CONFIGURATIONS TO APPROXIMATE THE SITE'S PRE-CONSTRUCTION VEGETATION CHARACTERISTICS.
26. MISTLETOE INFECTIONS WILL BE REMOVED FROM SPECIMENS BEFORE TRANSPLANTING.

Two working days before you dig
CALL FOR THE BLUE STAKES
1-800-782-5348
Blue Stake Center
CALL COLLECT

Priscilla S. Cornelio, P.E., Director

	Date
Designed DDS	07/09
Drawn PB	07/09
Checked DKM	07/09
Proj. L.A. DDS	07/09

No.	Revision Description	Engineer	Date

REGISTERED LANDSCAPE ARCHITECT
CERTIFICATE NO. 48751
DARLENE D. SHOWALTER
Date Signed 9-21-09
ARIZONA, U.S.A.
Expires 12/31/2011

McGann & Associates
Landscape Architects and Planners
6814 N. Oracle Rd. Suite 210
Tucson, Arizona 85704
Telephone: (520) 297-9540 Fax: (520) 297-9545

Pima County Department of Transportation

LA CHOLLA BLVD.
RUTHRAUFF RD. TO RIVER RD.
NATIVE PLANT
PRESERVATION PLAN

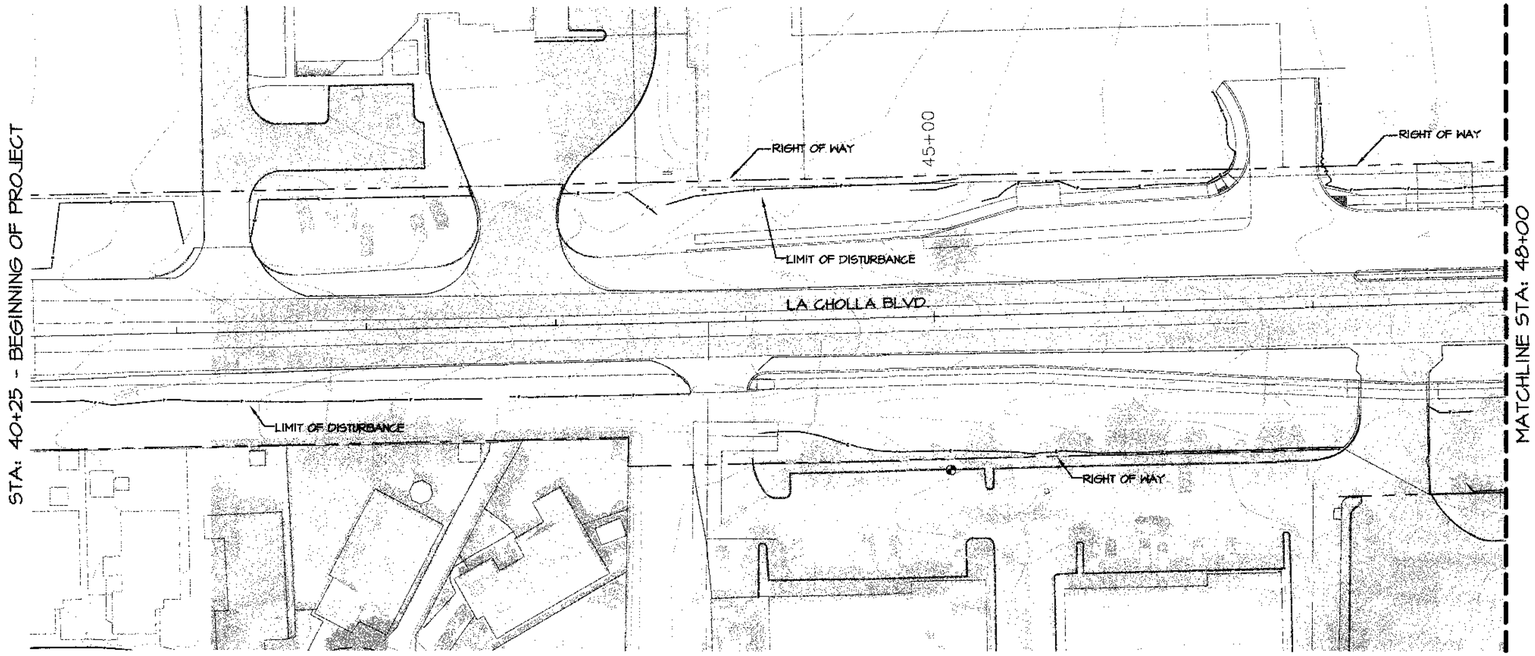

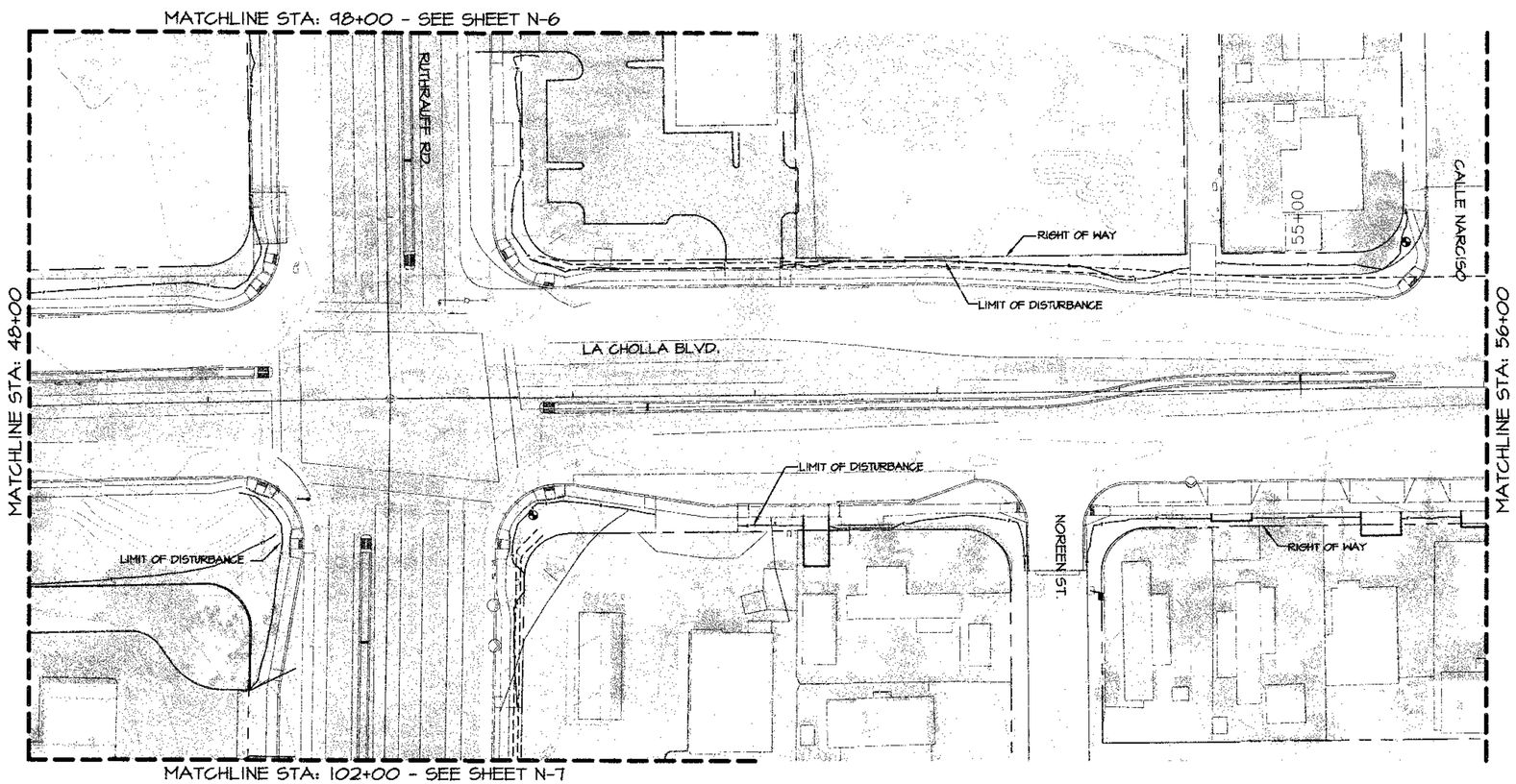

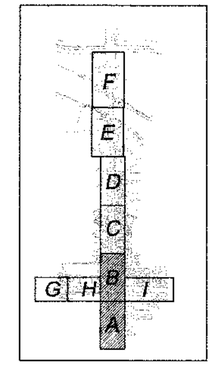

AREA KEY MAP

SCALE: N.T.S.

NO NATIVE PLANTS PRESENT IN THESE AREAS

SYMBOL LEGEND AND KEY			
PLANT	PRESERVE IN PLACE	TRANSPLANT ON-SITE	REMOVE FROM SITE
TREE			
SHRUB			
CACTUS			

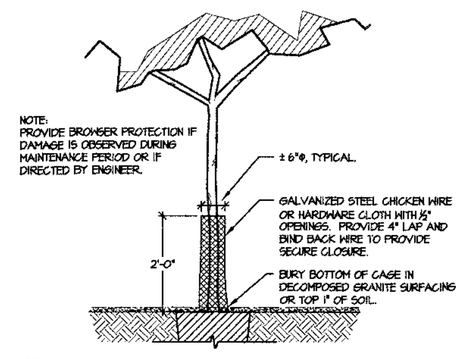

1 BROWSER PROTECTION CAGE FOR TREES

SCALE: N.T.S. PL-5.1

NORTH

0 20 40 80

Two working days before you dig CALL FOR THE BLUE STAKES 1-800-782-5348 Blue Stake Center CALL COLLECT

Priscilla S. Cornelio, P.E., Director

		Date
Designed	DDS	07/09
Drawn	PB	07/09
Checked	DKM	07/09
Proj. L.A.	DDS	07/09

No.	Revision Description	Engineer	Date

REGISTERED LANDSCAPE ARCHITECT CERTIFICATE NO. 48751 DARLENE D. SHOWALTER Date Signed 12/31/09 ARIZONA, U.S.A. Expires 12/31/2011

McGann & Associates
Landscape Architects and Planners
8844 N. Oracle Rd., Suite 210
Tucson, Arizona 85704
Telephone: (520) 297-9540 Fax: (520) 297-9545

Pima County Department of Transportation

LA CHOLLA BLVD.
RUTHRAUFF RD. TO RIVER RD.
NATIVE PLANT
PRESERVATION PLAN
AREA A–B

Scales	1" = 40'	Sheet N2 of N8	Page 189 of 356

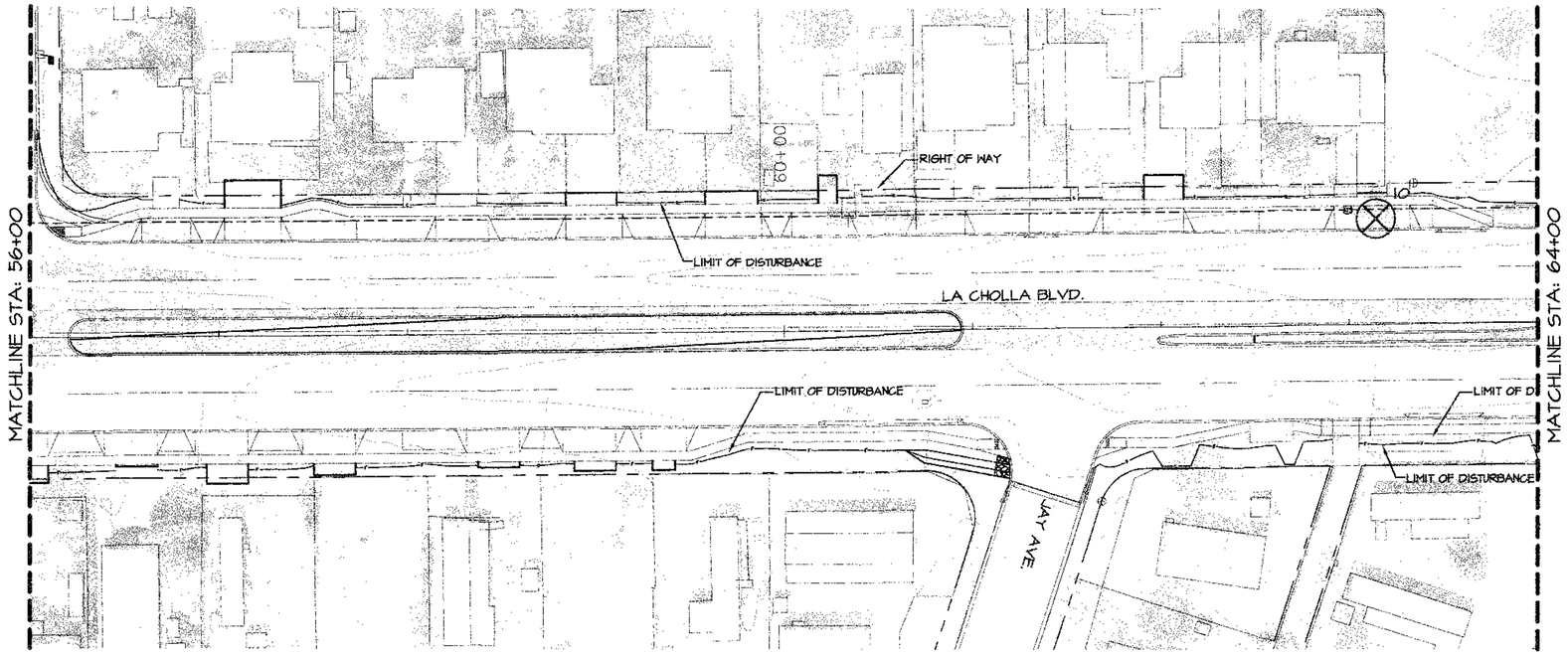

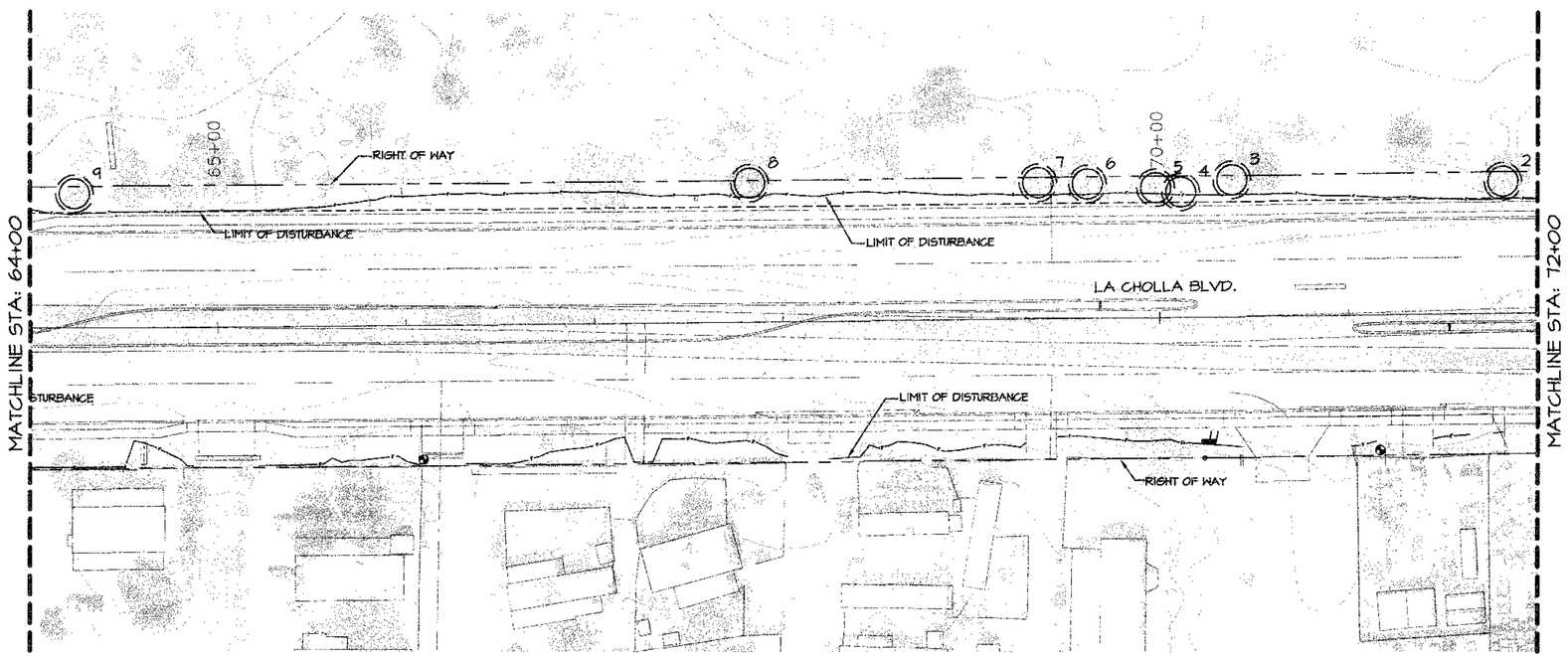

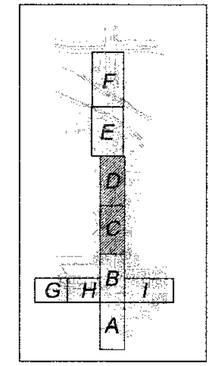

AREA KEY MAP

SCALE: N.T.S.

SYMBOL LEGEND AND KEY			
PLANT	PRESERVE IN PLACE	TRANSPLANT ON-SITE	REMOVE FROM SITE
TREE	○	⊡	⊗
SHRUB	○	○	⊗
CACTUS	◉	◉	⊗

NORTH

0 20 40 80

Two working days before you dig CALL FOR THE BLUE STAKES 1-800-782-5348 Blue Stake Center CALL COLLECT

Priscilla S. Cornelio, P.E., Director

Designed	DDS	07/09
Drawn	PB	07/09
Checked	DKM	07/09
Proj. L.A.	DDS	07/09

No.	Revision Description	Engineer	Date

REGISTERED LANDSCAPE ARCHITECT CERTIFICATE NO. 48751 DARLENE D. SHOWALTER Date Signed 12/31/2011 ARIZONA, U.S.A.

Expires 12/31/2011

McGann & Associates
Landscape Architects and Planners
6836 North Oracle Rd. Suite 210
Tucson, Arizona 85704
Telephone: (520) 297-9540 Fax: (520) 297-9545

Pima County Department of Transportation

LA CHOLLA BLVD.
RUTHRAUFF RD. TO RIVER RD.
NATIVE PLANT
PRESERVATION PLAN
AREA C–D

Scales	1" = 40'	Sheet N3 of N8	Page 190 of 356

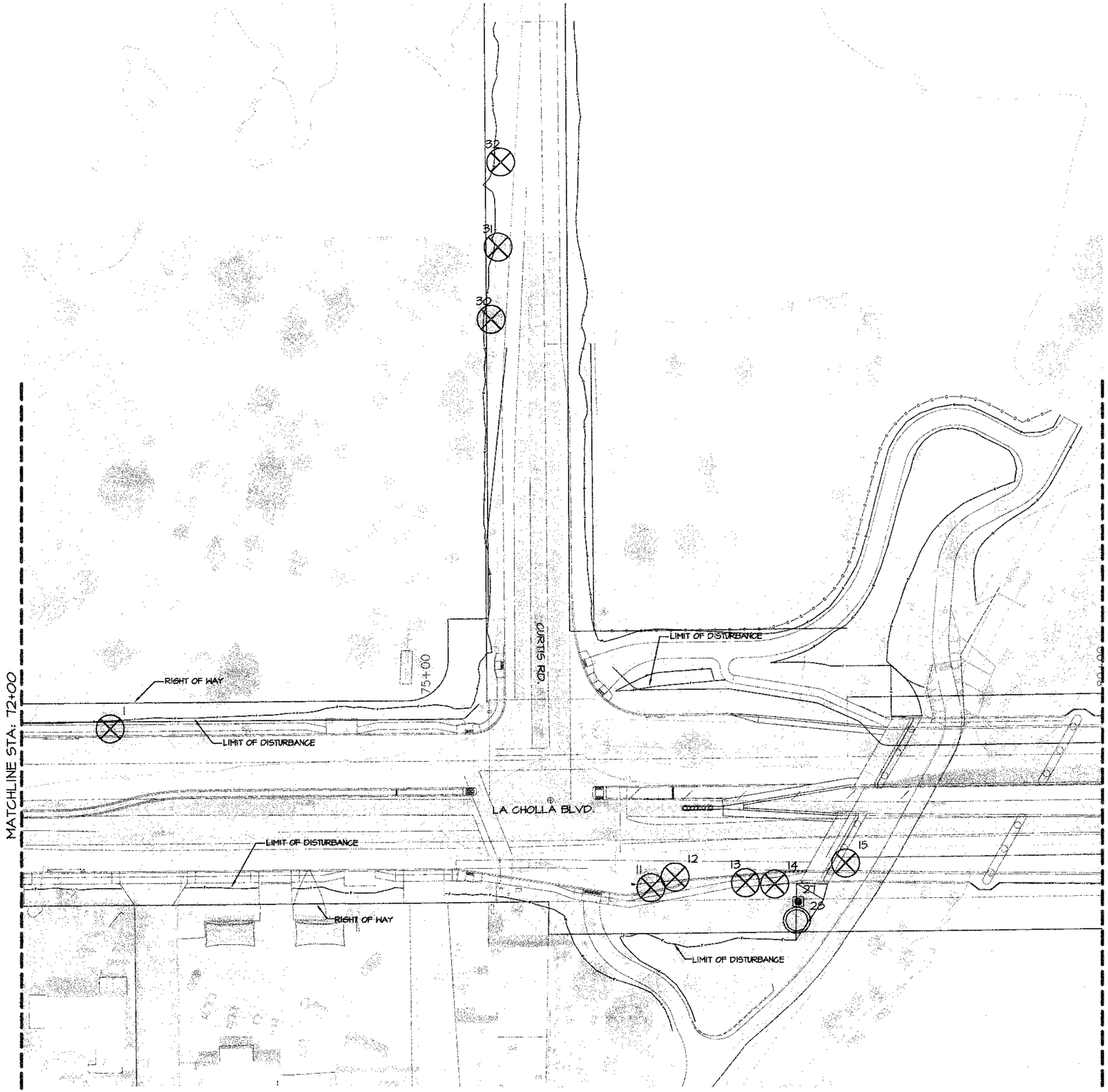

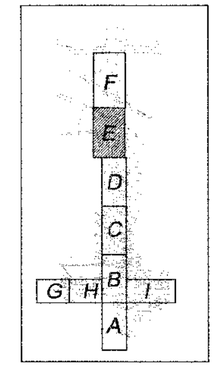

AREA KEY MAP

SCALE: N.T.S.

SYMBOL LEGEND AND KEY			
PLANT	PRESERVE IN PLACE	TRANSPLANT ON-SITE	REMOVE FROM SITE
TREE			
SHRUB			
CACTUS			

NORTH

0 20 40 80

Two working days before you dig CALL FOR THE BLUE STAKES 1-800-782-5348 Blue Stake Center CALL COLLECT

No.	Revision Description	Engineer	Date

		Date
Designed	DDS	07/09
Drawn	PB	07/09
Checked	DKM	07/09
Proj. L.A.	DDS	07/09

REGISTERED LANDSCAPE ARCHITECT CERTIFICATE NO. 48751 DARLENE D. SHOWALTER Date Signed 6-24-09 ARIZONA, U.S.A. Expires 12/31/2011

McGann & Associates
Landscape Architects and Planners
6884 North Oracle Rd, Suite 210
Tucson, Arizona 85704
Telephone: (520) 297-9540 Fax: (520) 297-8545

Pima County Department of Transportation

Priscilla S. Cornelio, P.E., Director

LA CHOLLA BLVD.
RUTHRAUFF RD. TO RIVER RD.
NATIVE PLANT
PRESERVATION PLAN
AREA E

Scales	1" = 40'	Sheet N4 of N8	Page 191 of 356

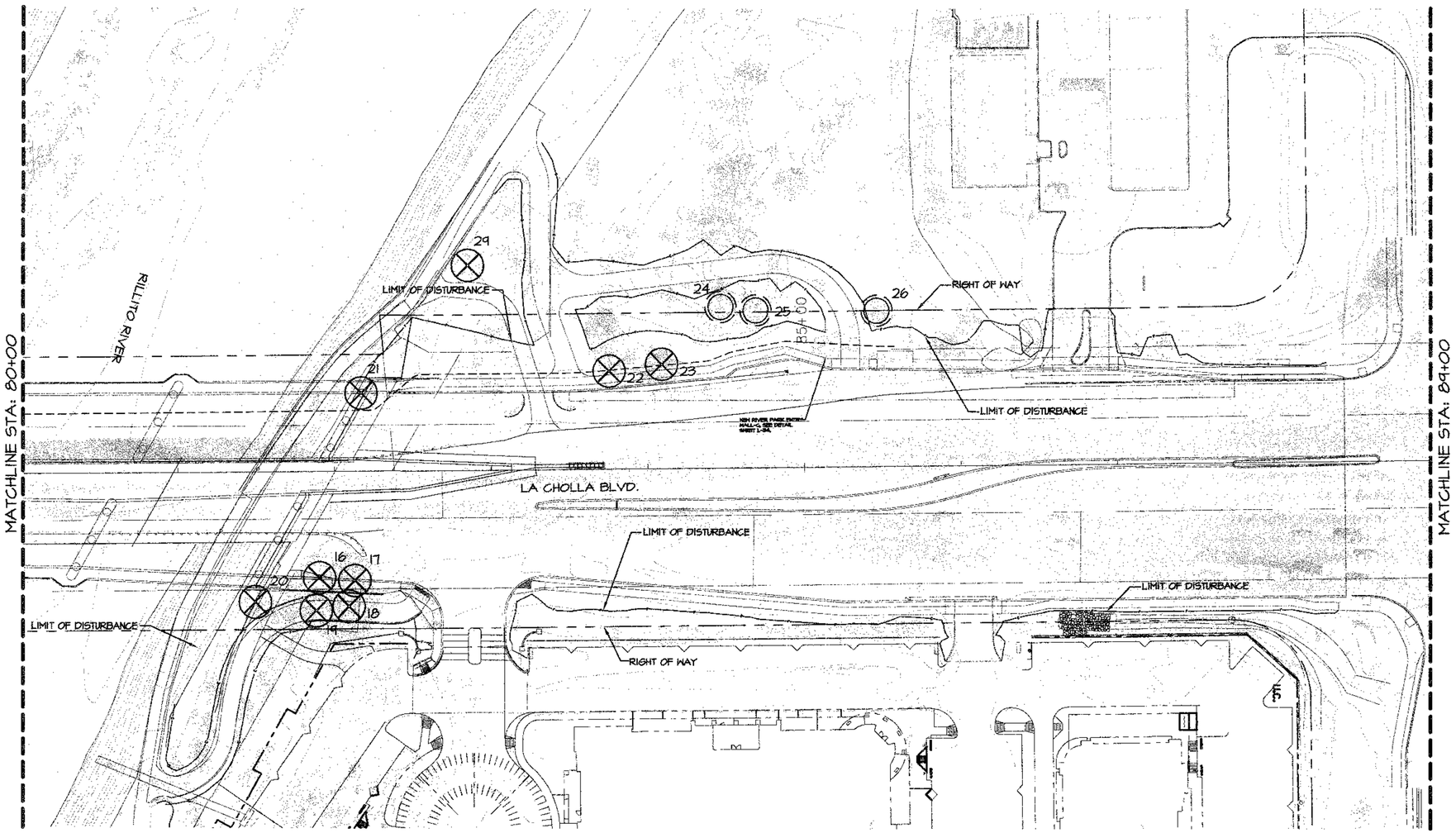

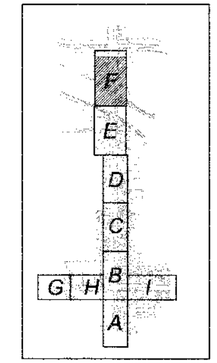

AREA KEY MAP

SCALE: N.T.S.

SYMBOL LEGEND AND KEY			
PLANT	PRESERVE IN PLACE	TRANSPLANT ON-SITE	REMOVE FROM SITE
TREE	◯	⊡	⊗
SHRUB	○	◎	⊗
CACTUS	◉	◉	◉

NORTH

0 20 40 80

Two working days before you dig CALL FOR THE BLUE STAKES 1-800-782-5348 Blue Stake Center CALL COLLECT

Pima County Department of Transportation

Priscilla S. Cornelio, P.E., Director

No.	Revision Description	Date

Engineer

		Date
Designed	DDS	07/09
Drawn	PB	07/09
Checked	DKM	07/09
Proj. L.A.	DDS	07/09

REGISTERED LANDSCAPE ARCHITECT CERTIFICATE NO. 48751 DARLENE D. SHOWALTER Date Signed 7/9/09 ARIZONA, U.S.A.

Expires 12/31/2011

McGann & Associates
Landscape Architects and Planners
6314 North Oracle Rd., Suite 210
Tucson, Arizona 85704
Telephone: (520) 297-9540 Fax: (520) 297-9545

LA CHOLLA BLVD.
RUTHRAUFF RD. TO RIVER RD.
NATIVE PLANT
PRESERVATION PLAN
AREA F

Scales	1" = 40'	Sheet N5 of N8	Page 192 of 356

MATCHLINE STA: 92+70

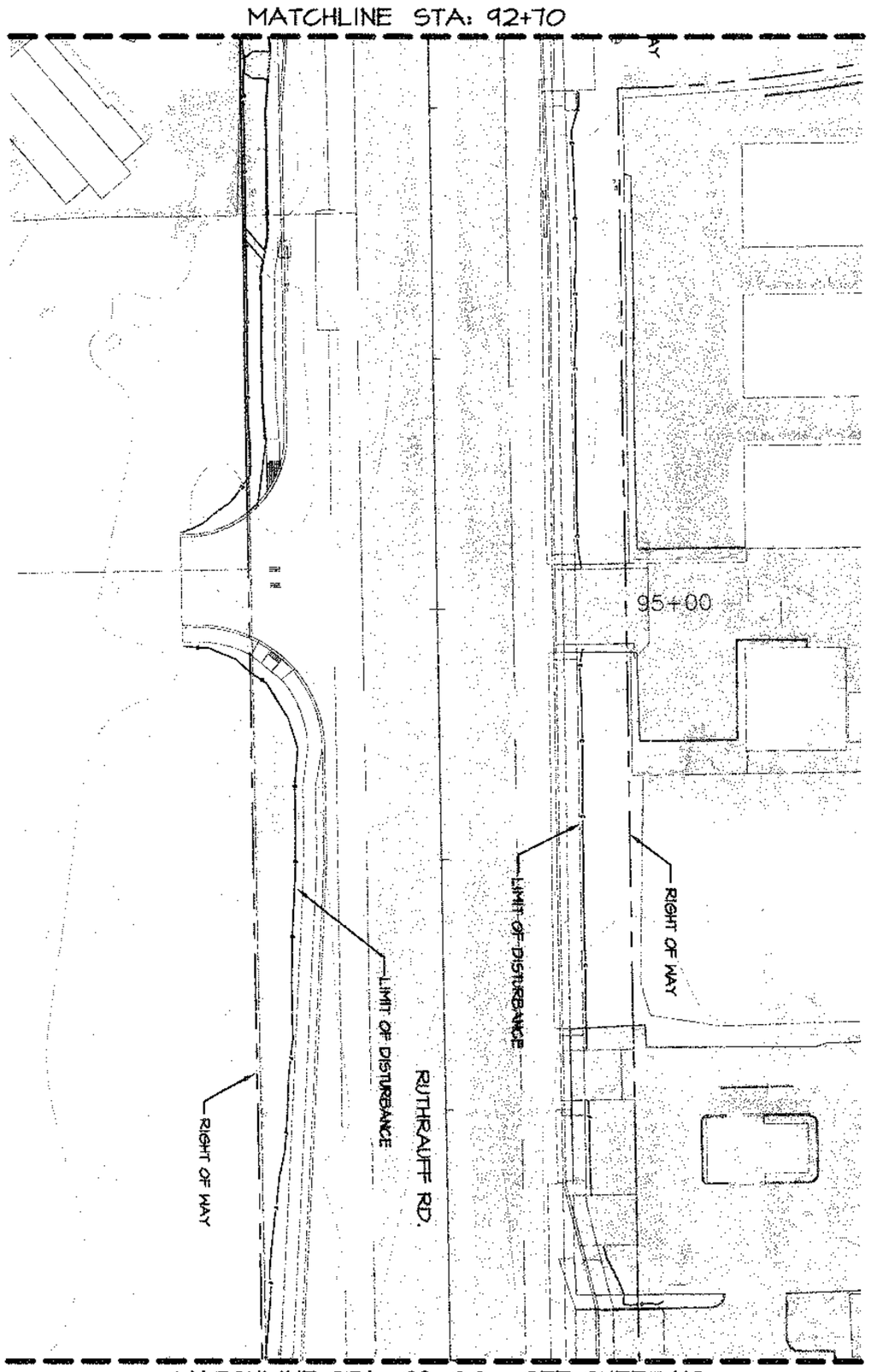

MATCHLINE STA: 98+00 - SEE SHEET N2

STA: 88+00- BEGINNING OF PROJECT

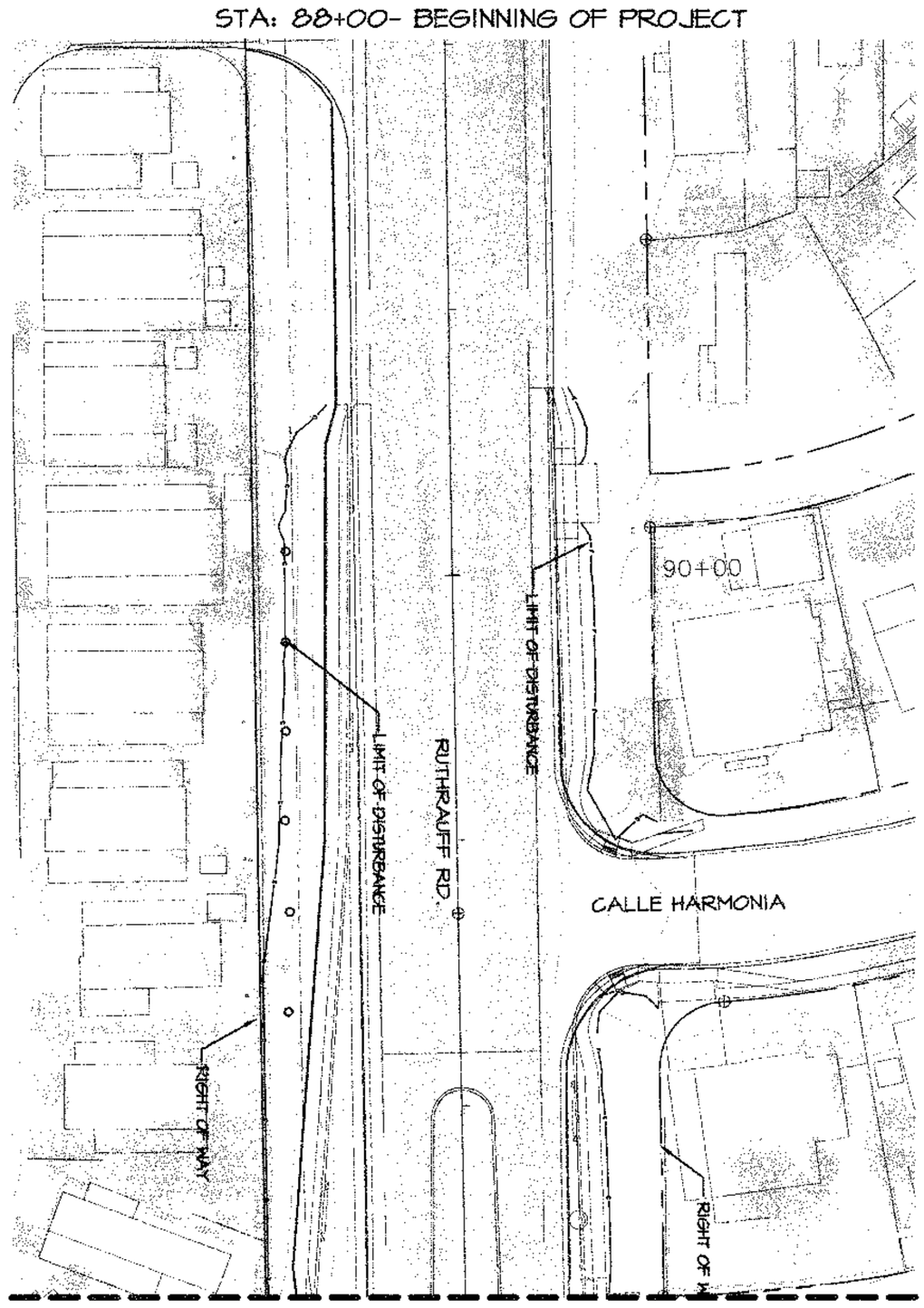

MATCHLINE STA: 92+70

NO NATIVE PLANTS PRESENT IN THESE AREAS

AREA KEY MAP

SCALE: N.T.S.

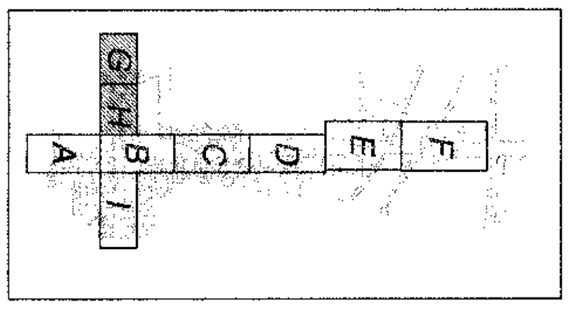

SYMBOL LEGEND AND KEY

	PRESERVE IN PLACE	TRANSPLANT ON-SITE	REMOVE FROM SITE
TREE			
SHRUB			
CACTUS			

NORTH

Two working days before you dig CALL FOR THE BLUE STAKES Blue Stake Center CALL COLLECT 1-800-782-5348

Scales

0 20 40 80

1" = 40'

Pima County Department of Transportation

Priscilla S. Cornelio, P.E., Director

LA CHOLLA BLVD.
RUTHRAUFF RD. TO RIVER RD.
NATIVE PLANT
PRESERVATION PLAN
AREA G-H

McGann & Associates
Landscape Architects and Planners
8814 North Oracle Rd., Suite 210
Tucson, Arizona 85704
Telephone: (520) 297-9540 Fax: (520) 297-9545

Expires 12/31/2011

REGISTERED LANDSCAPE ARCHITECT CERTIFICATE NO. 48751 DARLENE D. SHOWALTER Date Signed 7-21-09 ARIZONA U.S.A.

No.	Revision Description	Engineer	Date

		Date
Designed	DDS	07/09
Drawn	PB	07/09
Checked	DKM	07/09
Proj. L.A.	DDS	07/09

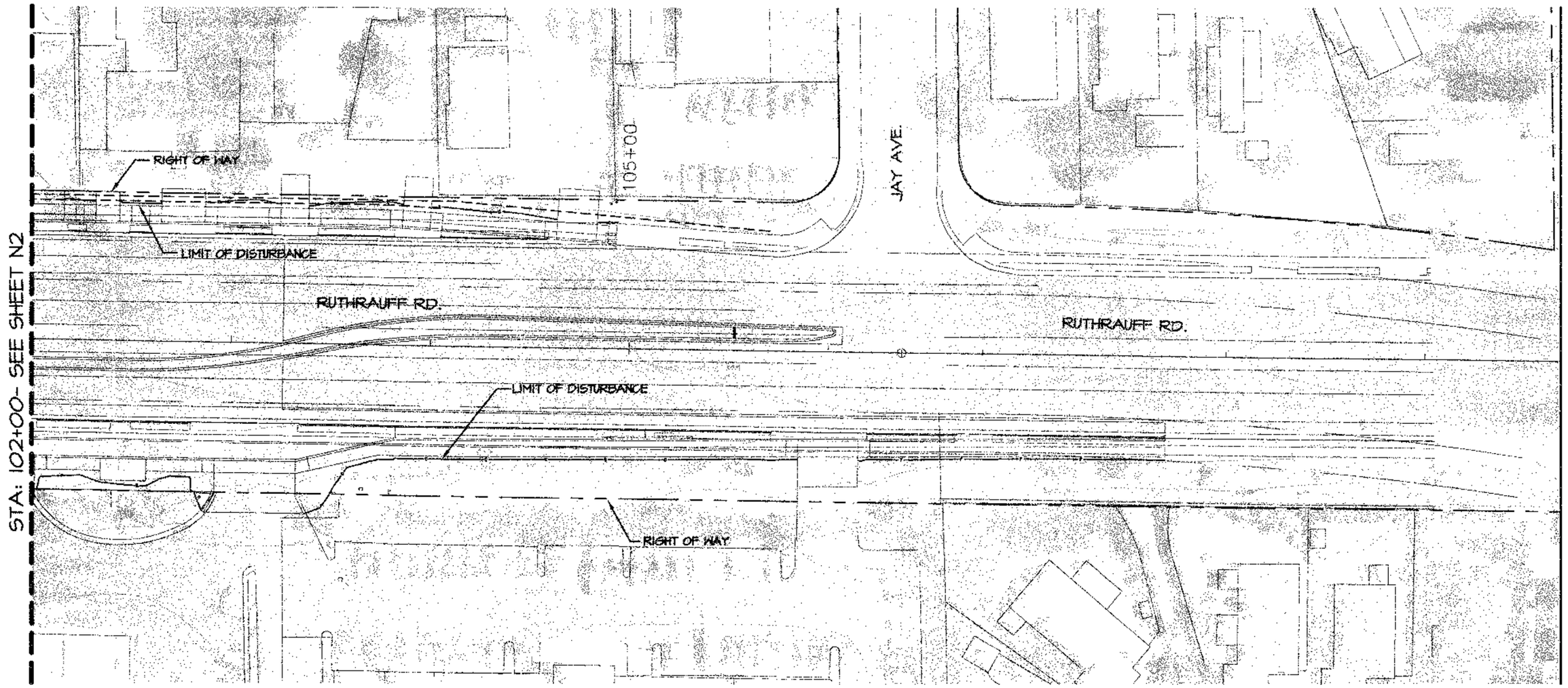

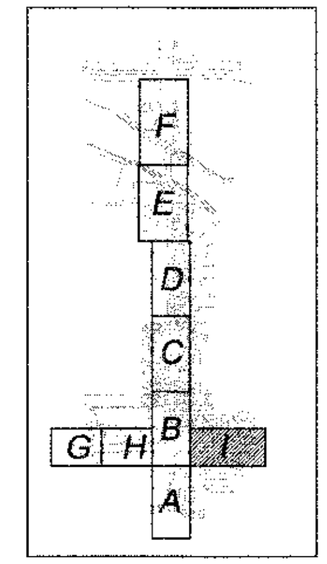

AREA KEY MAP

SCALE: N.T.S.

SYMBOL LEGEND AND KEY			
PLANT	PRESERVE IN PLACE	TRANSPLANT ON-SITE	REMOVE FROM SITE
TREE			
SHRUB			
CACTUS			

NO NATIVE PLANTS PRESENT IN THIS AREA

NORTH

0 20 40 80

Two working days before you dig, CALL FOR THE BLUE STAKES
1-800-782-5348
Blue Stake Center
CALL COLLECT

Pima County Department of Transportation

Priscilla S. Cornelio, P.E., Director

Designed	DDS	07/09
Drawn	PB	07/09
Checked	DKM	07/09
Proj. L.A.	DDS	07/09

No.	Revision Description	Engineer	Date

REGISTERED LANDSCAPE ARCHITECT
CERTIFICATE NO. 48751
DARLENE D. SHOWALTER
Date Signed 8-21-09
ARIZONA, U.S.A.
Expires 12/31/2011

McGann & Associates
Landscape Architects and Planners
6884 North Oracle Rd., Suite 210
Tucson, Arizona 85704
Telephone: (520) 297-9540 Fax: (520) 297-9545

LA CHOLLA BLVD.
RUTHRAUFF RD. TO RIVER RD.
DEMOLITION, RELOCATION
AND PRESERVATION PLAN
AREA 1

Scales	1" = 40'	Sheet N7 of N8	Page 194 of 356

NATIVE PLANT INVENTORY TABLE

ABBREVIATIONS	REASONS FOR MEDIUM VIABILITY RANKING	REASONS FOR MODERATE TRANSPLANTABILITY RATING	FORM NOTES
	A = MODERATE PLANT HEALTH B = ADVANCED AGE C = MODERATE / POOR FORM	D = GENUS / SPECIES HAS LOW TRANSPLANT SURVIVAL RATE E = SIZE NOT SUITABLE FOR TRANSPLANT F = SOILS ARE TOO ROCKY OR SHALLOW FOR TRANSPLANT G = TOPOGRAPHY LIMITS TRANSPLANTABILITY H = INTERFERENCE FROM ADJCANT PLANTS / IMPROVEMENTS	S = SINGLE TRUNK M = MULTI-TRUNK

FIELD TAG I.D. NUMBER	PLANT TYPE	BOTANICAL NAME	COMMON NAME	CALIPER (INCHES)	HEIGHT (FEET)	FORM (ARMS)	VIABILITY RATING	VIABILITY NOTES	TRANSPLANT RATING	TRANSPLANT NOTES	PROPOSED DISPOSITION
1	TREE	Chilopsis Linearis	Desert Willow	11	16	M	High	None	Low	H- Interference	RFS
2	TREE	Chilopsis Linearis	Desert Willow	11	14	M	Low	C-Mod/Poor Form	Low	H- Interference	PIP
3	TREE	Parkinsonia floridum	Blue Palo Verde	5	9	M	High	None	Medium	H- Interference	PIP
4	TREE	Parkinsonia floridum	Blue Palo Verde	4	8	M	High	None	Medium	H- Interference	PIP
5	TREE	Parkinsonia floridum	Blue Palo Verde	8	10	M	Medium	A- Moderate Heath	Low	H- Interference	PIP
6	TREE	Prosopis velutina	Velvet Mesquite	10	11	M	Medium	C-Mod/Poor Form	Low	H- Interference	PIP
7	TREE	Prosopis velutina	Velvet Mesquite	14	12	M	Low	A- Moderate Heath	Low	H- Interference	PIP
8	TREE	Acacia greggii	Catclaw Acacia	13	9	M	Low	C-Mod/Poor Form	Low	H- Interference	PIP
9	TREE	Acacia greggii	Catclaw Acacia	8	8	M	Low	C-Mod/Poor Form	Low	H- Interference	PIP
10	TREE	Prosopis velutina	Velvet Mesquite	16	17	M	Low	C-Mod/Poor Form	Low	H- Interference	RFS
11	TREE	Parkinsonia floridum	Blue Palo Verde	10	15	M	High	None	Low	H- Interference	RFS
12	TREE	Chilopsis Linearis	Desert Willow	5	9	M	High	None	Low	H- Interference	RFS
13	TREE	Prosopis velutina	Velvet Mesquite	11	14	M	Medium	C-Mod/Poor Form	Low	H- Interference	RFS
14	TREE	Parkinsonia floridum	Blue Palo Verde	7	9	M	High	None	Low	H- Interference	RFS
15	TREE	Prosopis velutina	Velvet Mesquite	5	9	M	Low	C-Mod/Poor Form	Low	H- Interference	RFS
16	TREE	Parkinsonia floridum	Blue Palo Verde	17	17	M	Low	None	Low	None	RFS
17	TREE	Prosopis velutina	Velvet Mesquite	12	18	S	Low	None	Low	None	RFS
18	TREE	Prosopis velutnina	Velvet Mesquite	8	20	S	High		Low	E-Size not Suitable	RFS
19	TREE	Prosopis velutnina	Velvet Mesquite	10	20	S	High		Low	E-Size not Suitable	RFS
20	TREE	Parkinsonia floridum	Blue Palo Verde	4	8	M	High		Low	H- Interference	RFS
21	TREE	Prosopis velutnina	Velvet Mesquite	4	12	S	High		Low	G - Topo limits	RFS
22	TREE	Chilopsis linearis	Desert Willow	4	10	M	Low	C-Mod/Poor Form	Low	H- Interference	RFS
23	TREE	Chilopsis linearis	Desert Willow	4	10	M	Low	C-Mod/Poor Form	Low	H- Interference	RFS
24	TREE	Acacia greggii	Catclaw Acacia	8	15	M	Low	C-Mod/Poor Form	Low	H- Interference	PIP
25	TREE	Prosopis velutnina	Velvet Mesquite	12	15	M	Low	C-Mod/Poor Form	Low	F-Soils not Sutable	PIP
26	TREE	Prosopis velutnina	Velvet Mesquite	6	15	M	Low	C-Mod/Poor Form	Low	F-Soils not Sutable	PIP
27	CACTI	Carnegia gigantea	Saguaro	8	3	O	High		High		TOS
28	TREE	Parkinsonia floridum	Blue Palo Verde	12	15	M	High		Low	E-Size not Suitable	PIP
29	TREE	Parkinsonia floridum	Blue Palo Verde	12	15	M	High		Low	E-Soils not Suitable	RFS
30	TREE	Chilopsis linearis	Desert Willow	12	12	M	Low	C-Mod/Poor Form	Low	E-Soils not Suitable	RFS
31	TREE	Chilopsis linearis	Desert Willow	6	12	M	Med		Low	E-Soils not Suitable	RFS
32	TREE	Chilopsis linearis	Desert Willow	6	12	M	Med		Low	E-Soils not Suitable	RFS

Two working days before you dig CALL FOR THE BLUE STAKES
1-800-782-5348
Blue Stake Center CALL COLLECT

Pima County Department of Transportation

Priscilla S. Cornelio, P.E., Director

No.	Revision Description	Engineer	Date

		Date
Designed	DDS	07/09
Drawn	PB	07/09
Checked	DKM	07/09
Proj. L.A.	DDS	07/09

REGISTERED LANDSCAPE ARCHITECT 48751 DARLENE D. SHOWALTER Date Signed 8-21-09 ARIZONA, U.S.A.
Expires 12/31/2011

McGann & Associates
Landscape Architects and Planners
6914 North Oracle Rd, Suite 210
Tucson, Arizona 85704
Telephone (520) 297-9540 Fax (520) 297-5545

LA CHOLLA BLVD.
RUTHRAUFF RD. TO RIVER RD.
NATIVE PLANT PRESERVATION
PLAN – INVENTORY TABLE

Scales	1" = 40'	Sheet N8 of N8	Page 195 of 356

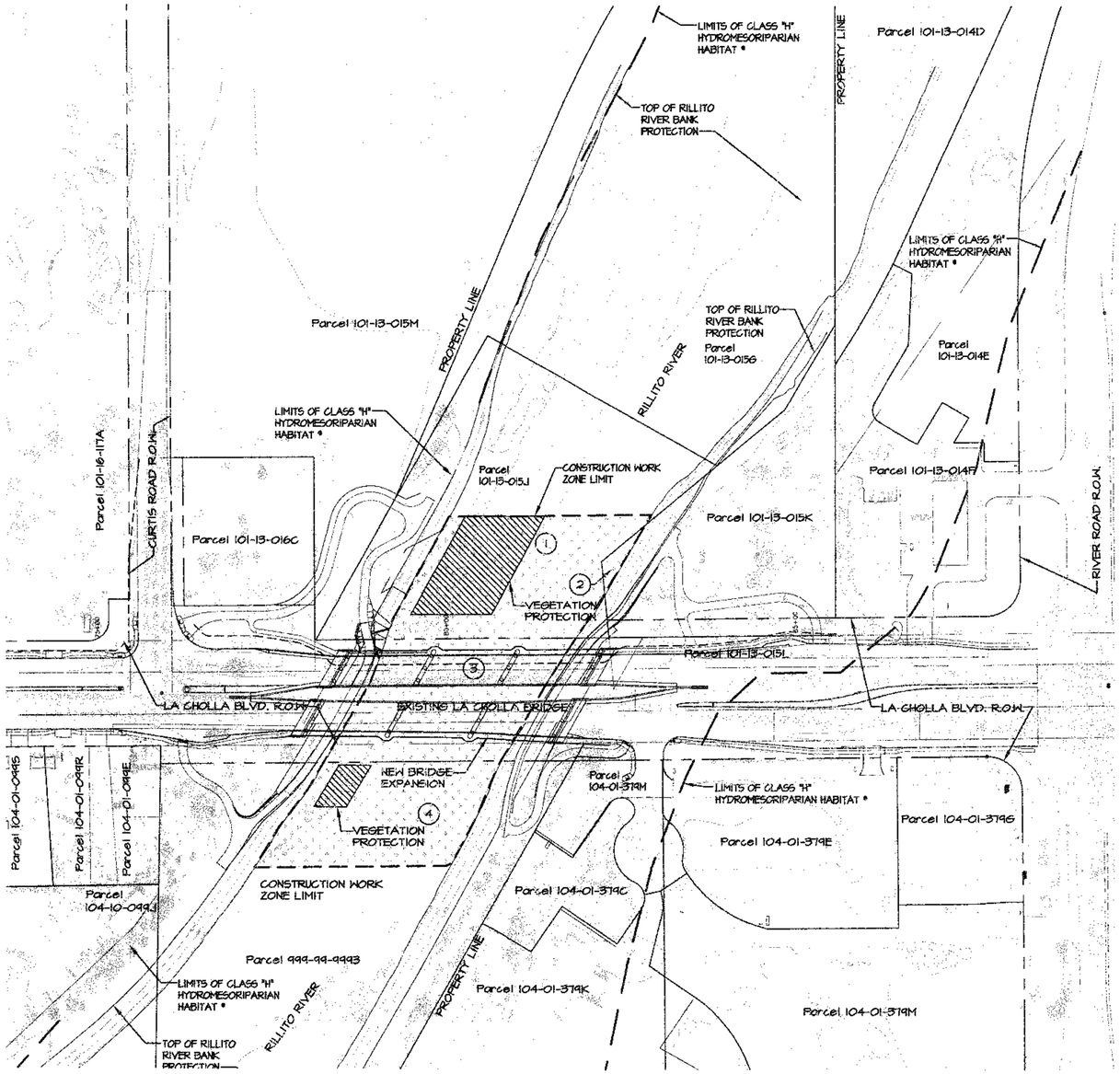

REGULATED RIPARIAN HABITAT DISTURBANCE AREA

SCALE: 1" = 100'-0"

LEGEND

- (#) DISTURBANCE AREA I.D. NO.
- —— —— LIMITS OF CLASS "H" REGULATED RIPARIAN HABITAT (RRH)
- — — — LIMITS OF TEMPORARY DISTURBANCE TO RIPARIAN HABITAT

* THE SOURCE OF THE RIPARIAN HABITAT LIMITS ARE FROM THE PIMA COUNTY MAPGUIDE LAYER - RIPARIAN HABITAT - PIMA COUNTY ORD. 2005-FC2

IMPACT SUMMARY

THE LA CHOLLA ROADWAY IMPROVEMENT PROJECT WILL REQUIRE TEMPORARY DISTURBANCE TO THE REGULATED RIPARIAN HABITAT (RRH) LOCATED WITHIN THE PROJECT BOUNDARIES. THE AREA CALCULATIONS BELOW IDENTIFY TOTAL RRH LOCATED ON EACH PARCEL AND THE AMOUNT OF RRH THAT WILL BE DISTURBED. THE TOTAL DISTURBANCE AREA IS THEN USED TO CALCULATE THE REQUIRED MITIGATION AREA.

Regulated Riparian Habitat (RRH) Disturbances

Disturbance Area	Parcel Number	Riparian Habitat Class	Total RRH Area Located on Parcel (Acres)	Total RRH Disturbance Area (Acres)
1	101-13-015J	Hydromesoriparian H	2.56	0.78
2	101-13-015K	Hydromesoriparian H	2.46	0.04
3	LA CHOLLA BLVD. R.O.W.	Hydromesoriparian H	1.94	0.91
4	999-99-9993	Hydromesoriparian H	73.98	1.01
			Total Disturbance Area =	2.74

AN ON-SITE INVENTORY OF EACH RRH DISTURBANCE AREA WAS CONDUCTED TO DETERMINE THE AMOUNT OF MITIGATION PLANTS TO BE PROVIDED. THE TABLES BELOW LIST ALL TREE AND PERENNIAL SHRUB SPECIES AND OTHER PLANTS FOUND WITHIN THE DISTURBANCE AREAS.

Inventory Summary Table - Trees and Perennial Shrubs

Botanical Name	Common Name	Height (feet)	Caliper (Inches)	Non-Native or Invasive
Chilopsis Linearis	Desert Willow	6	2	N
Chilopsis Linearis	Desert Willow	6	2	N
Chilopsis Linearis	Desert Willow	8	3	N
Chilopsis Linearis	Desert Willow	6	2	N
Parkinsonia floridum	Blue Palo Verde	15	12	N
Prosopis chilensis	Chilean Mesquite	7	2	Y
Parkinsonia floridum	Blue Palo Verde	7	2	N
Parkinsonia aculeata	Mexican Palo Verde	6	3	Y
Parkinsonia aculeata	Mexican Palo Verde	7	2	Y
Parkinsonia aculeata	Mexican Palo Verde	8	2	Y
Nicotiana glauca	Tree Tobacco	6	2	Y

Inventory Summary Table - Other Plants

Botanical Name	Common Name	Quantity Found
Larrea tridentata	Creosote	16
Encelia farinosa	Brittlebush	13
Ambrosia ambrosioides	Canyon Ragweed	6
Baccharis sarothroides	Desert Broom	2
Hymenoclea salsola	Burrobush	141

NORTH

0 50 100 200

Two working days before you dig CALL FOR THE 'BLUE STAKES' 1-800-782-5348 Blue Stake Center CALL COLLECT

No.	Revision Description	Date

		Date
Designed	DDS	07/09
Drawn	PB	07/09
Checked	DKM	07/09
Proj. L.A.	DDS	07/09

Priscilla S. Cornelio, P.E., Director

REGISTERED LANDSCAPE ARCHITECT CERTIFICATE NO. 48751 DARLENE D. SHOWALTER Date Signed 4-2-09 ARIZONA, U.S.A. Expires 12/31/2011

McGann & Associates
Landscape Architects and Planners
8814 North Oracle Rd., Suite 210
Tucson, Arizona 85704
Telephone: (520) 297-9540 Fax: (520) 297-9545

Pima County Department of Transportation

LA CHOLLA BLVD.
RUTHRAUFF RD. TO RIVER RD.
RIPARIAN HABITAT
IMPACT SUMMARY

Scales	1" = 100'	Sheet RM1 of RM1	Page 196 of 356

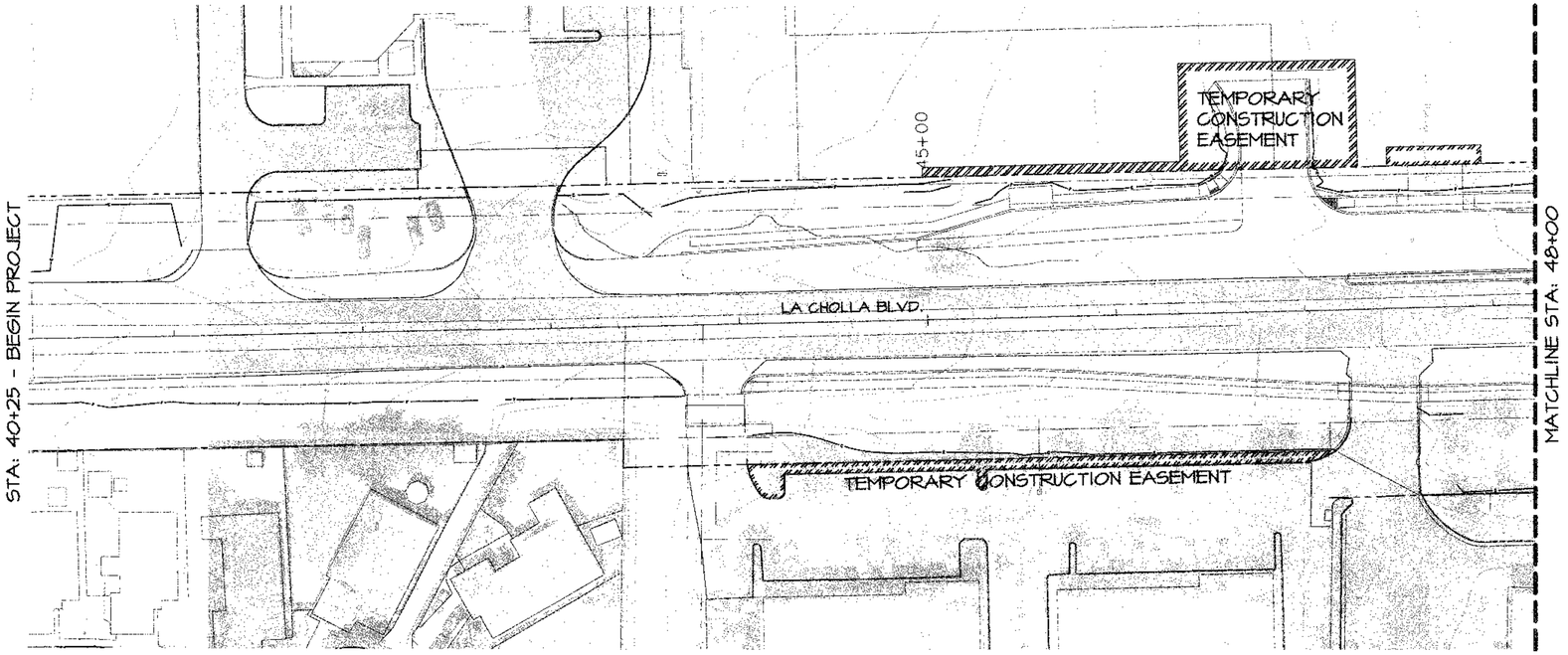

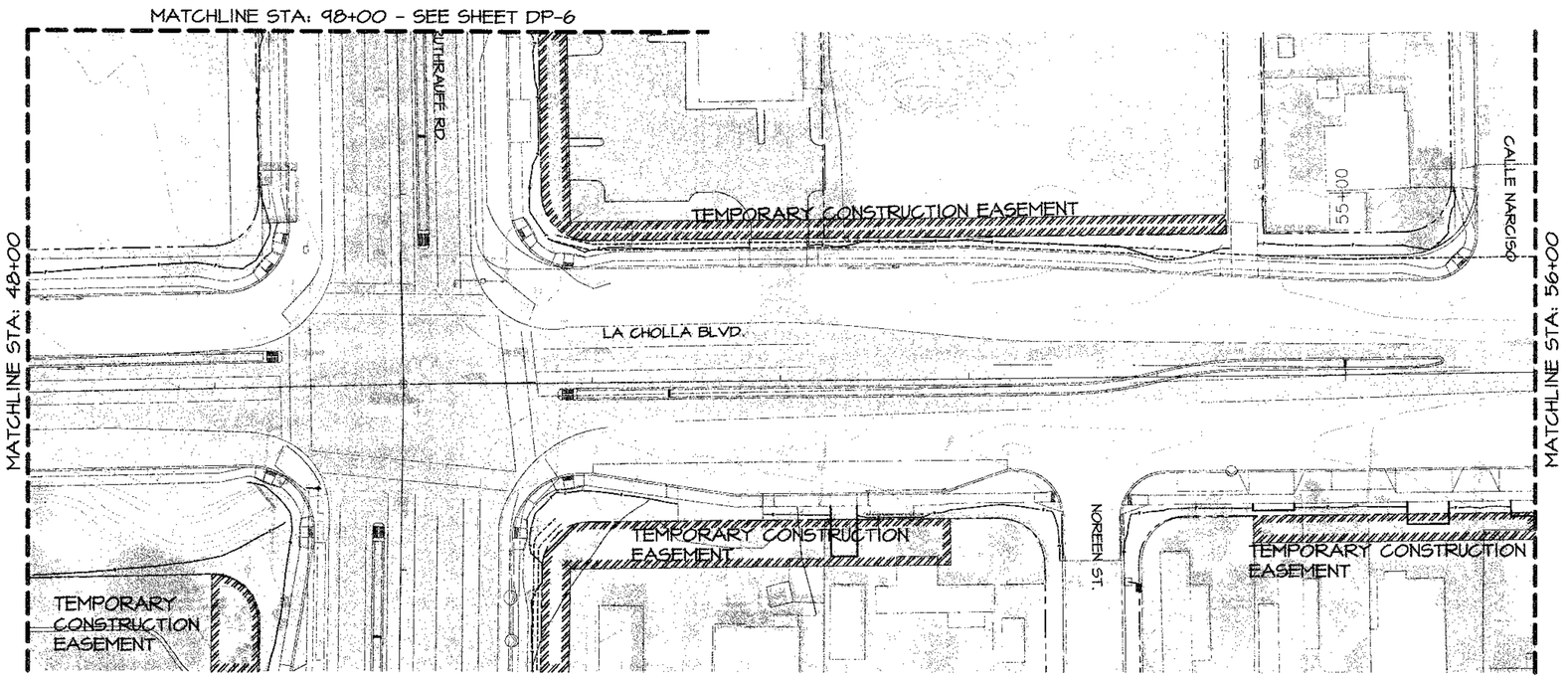

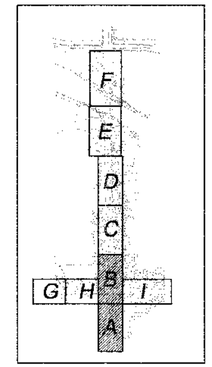

AREA KEY MAP

SCALE: N.T.S.

PRIVATELY OWNED LANDSCAPE AND IRRIGATION PROTECTION

EXISTING PRIVATELY OWNED LANDSCAPE AND IRRIGATION WITHIN TEMPORARY CONSTRUCTION EASEMENT

ALL EXISTING PRIVATELY OWNED LANDSCAPE AND IRRIGATION SHALL BE PROTECTED IN PLACE TO THE EXTENT POSSIBLE. ALL NECESSARY REMOVAL OF PLANTS AND CAPPING OF EXISTING IRRIGATION SHALL BE COORDINATED WITH THE OWNER. ALL PLANTS REMOVED SHALL BE REPLACED IN KIND AND RECONNECTED TO EXISTING PRIVATE IRRIGATION.

SYMBOL LEGEND AND KEY

PLANT	PRESERVE IN PLACE	TRANSPLANT ON-SITE	REMOVE FROM SITE
TREE	○	⊡	⊗
SHRUB	○	⊡	⊗
CACTUS	◉	⊡	⊗

NORTH

0 20 40 80

Two working days before you dig CALL FOR THE BLUE STAKES 1-800-782-5348 Blue Stake Center CALL COLLECT

Priscilla S. Cornelio, P.E., Director

Pima County Department of Transportation

Designed	DDS	07/09
Drawn	PB	07/09
Checked	DKM	07/09
Proj. L.A.	DDS	07/09

No.	Revision Description	Engineer	Date

REGISTERED LANDSCAPE ARCHITECT 48751 DARLENE D. SHOWALTER ARIZONA, U.S.A. Expires 12/31/2011

McGann & Associates
Landscape Architects and Planners
6974 North Oracle Rd., Suite 210
Tucson, Arizona 85704
Telephone: (520) 297-9540 Fax: (520) 297-9545

LA CHOLLA BLVD.
RUTHRAUFF RD. TO RIVER RD.
DEMOLITION, RELOCATION
AND PRESERVATION PLAN
AREA A–B

Scales	1" = 40'	Sheet DP1 of DP6	Page 197 of 356

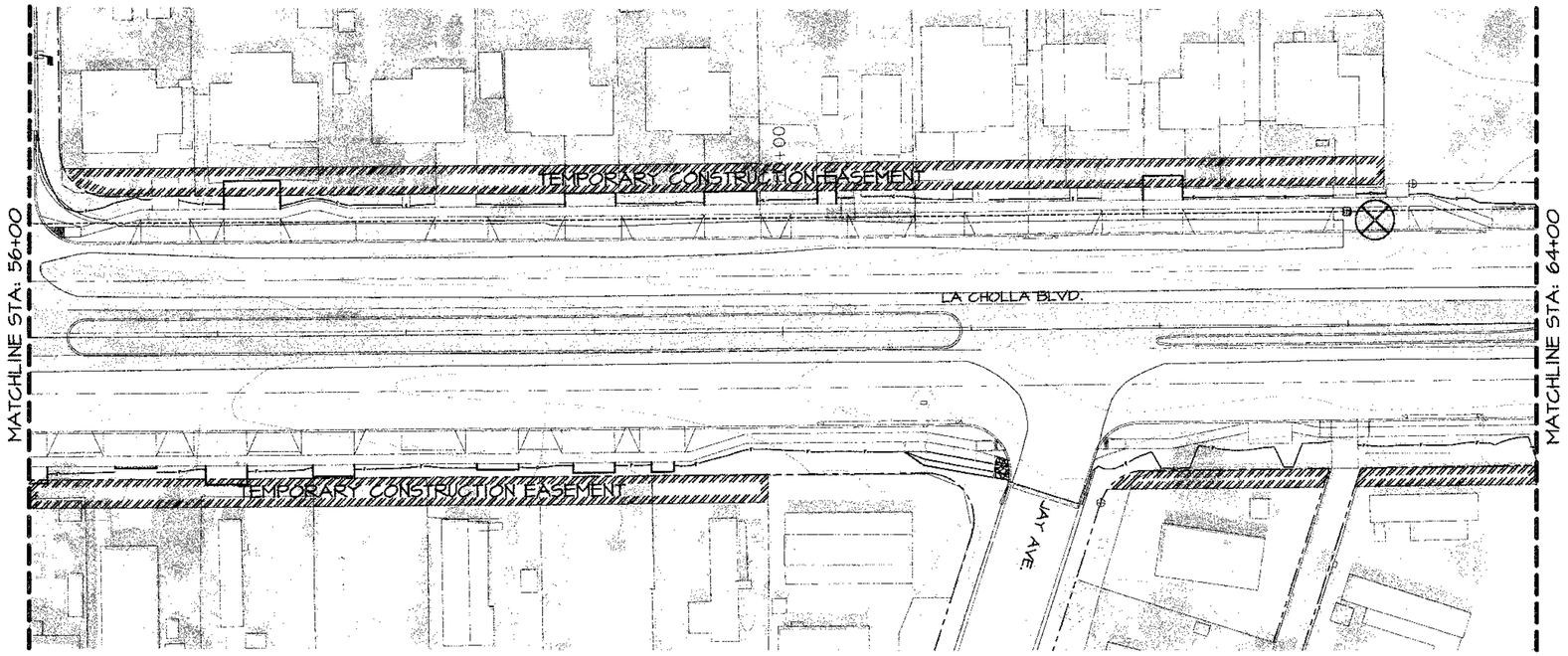

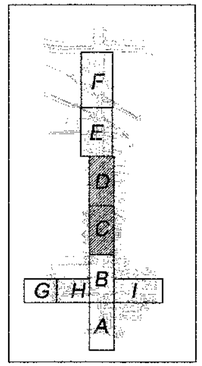

AREA KEY MAP
SCALE: N.T.S.

PRIVATELY OWNED LANDSCAPE AND IRRIGATION PROTECTION

EXISTING PRIVATELY OWNED LANDSCAPE AND IRRIGATION WITHIN TEMPORARY CONSTRUCTION EASEMENT

ALL EXISTING PRIVATELY OWNED LANDSCAPE AND IRRIGATION SHALL BE PROTECTED IN PLACE TO THE EXTENT POSSIBLE. ALL NECESSARY REMOVAL OF PLANTS AND CAPPING OF EXISTING IRRIGATION SHALL BE COORDINATED WITH THE OWNER. ALL PLANTS REMOVED SHALL BE REPLACED IN KIND AND RECONNECTED TO EXISTING PRIVATE IRRIGATION.

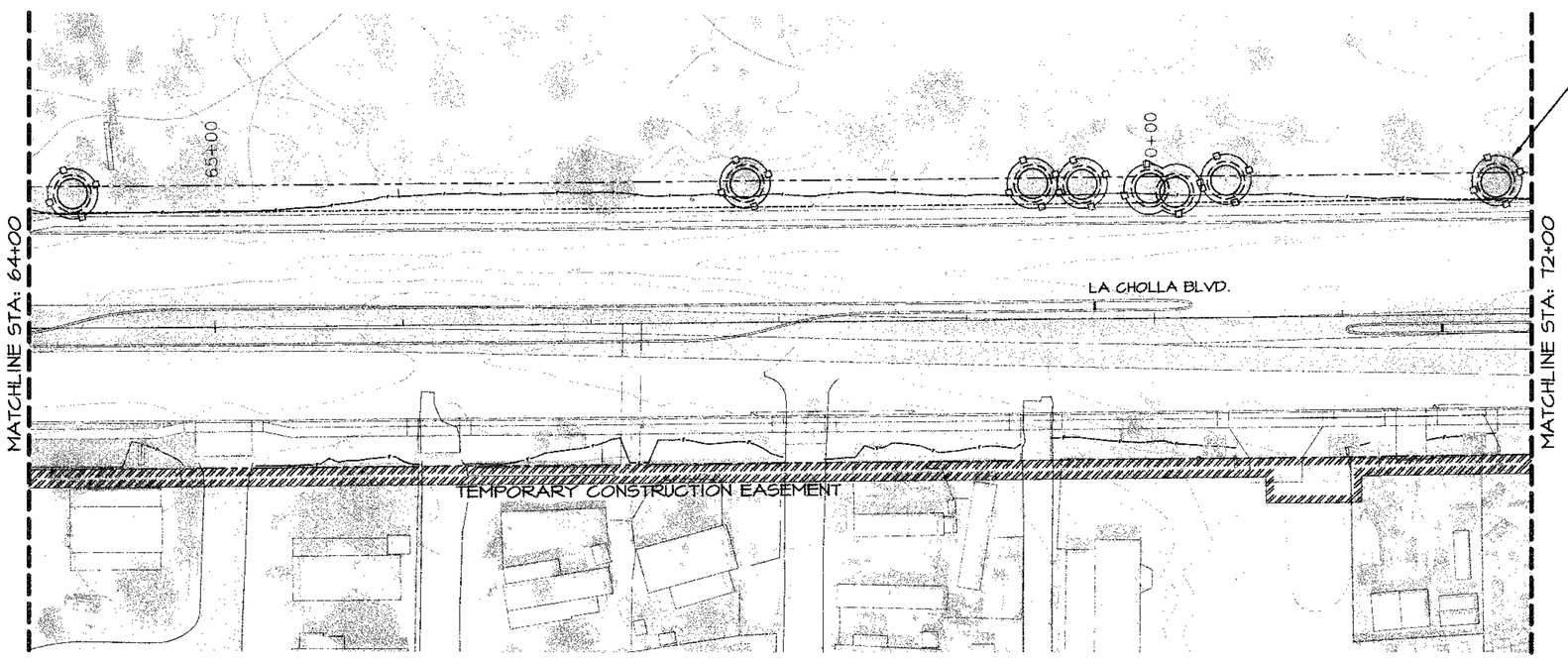

INSTALL PRESERVE IN PLACE FENCING AROUND NATIVE TREES TO BE PRESERVED IN PLACE BEFORE START OF CONSTRUCTION, TYPICAL. PIP FENCE SHALL BE MAINTAINED DURING CONSTRUCTION. SEE NOTE 7, SHEET N-1.

SYMBOL LEGEND AND KEY			
PLANT	PRESERVE IN PLACE	TRANSPLANT ON-SITE	REMOVE FROM SITE
TREE			
SHRUB			
CACTUS			

NORTH

0 20 40 80

Two working days before you dig CALL FOR THE "BLUE STAKES"
1-800-782-5348
Blue Stake Center CALL COLLECT

Scales	1" = 40'	Sheet DP2 of DP6	Page 198 of 356

Pima County Department of Transportation

LA CHOLLA BLVD.
RUTHRAUFF RD. TO RIVER RD.
DEMOLITION, RELOCATION
AND PRESERVATION PLAN
AREA C–D

McGann & Associates
Landscape Architects and Planners
6816 North Oracle Rd. Suite 210
Tucson, Arizona 85704
Telephone: (520) 297-9540 Fax: (520) 297-9545

REGISTERED LANDSCAPE ARCHITECT CERTIFICATE NO. 48751 DARLENE D. SHOWALTER ARIZONA, U.S.A.
Expires 12/31/2011

No.	Revision Description	Engineer	Date

Priscilla S. Cornelio, P.E., Director

		Date
Designed	DDS	07/09
Drawn	PB	07/09
Checked	DKM	07/09
Proj. L.A.	DDS	07/09

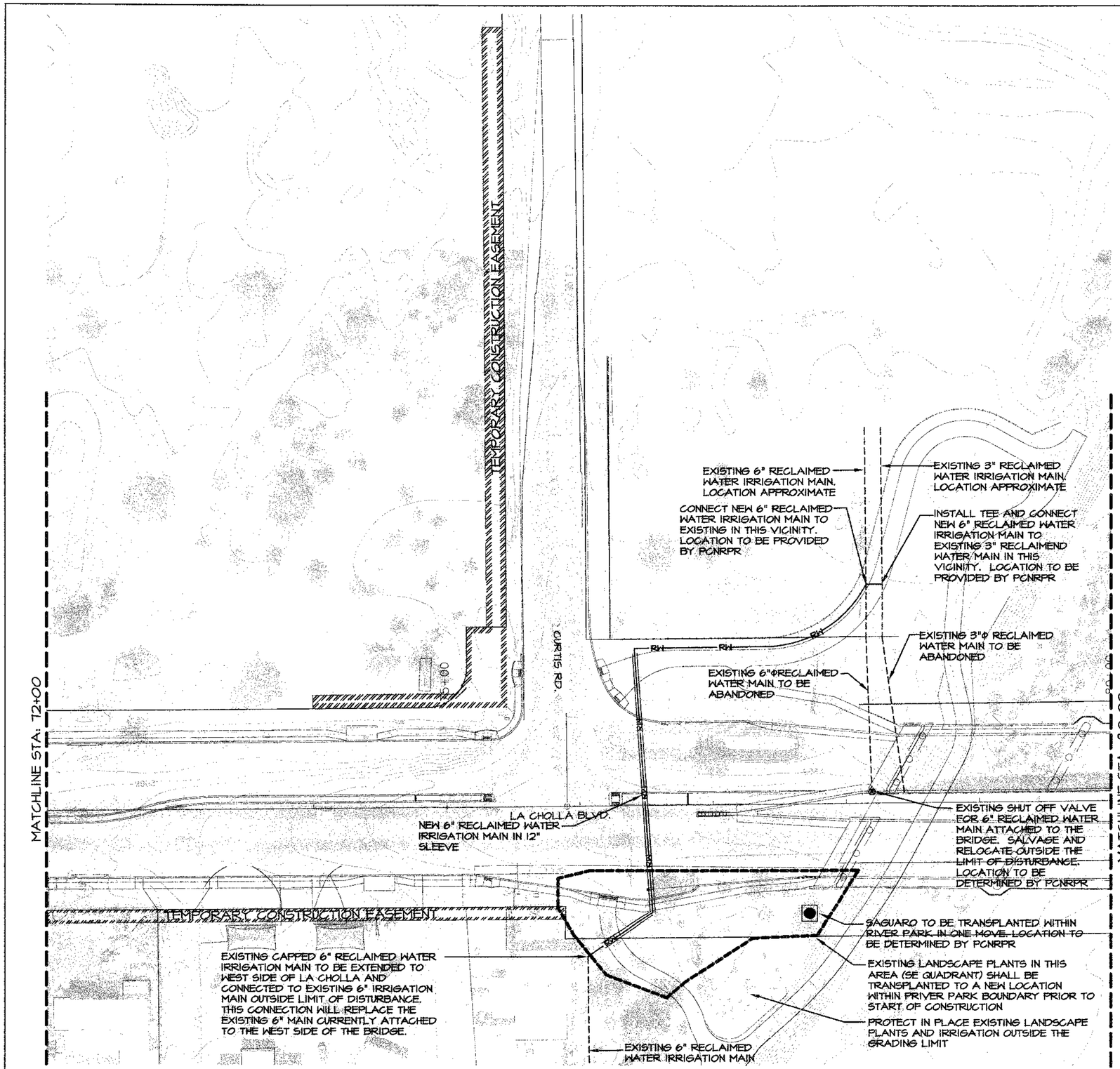

SYMBOL LEGEND AND KEY

PLANT	PRESERVE IN PLACE	TRANSPLANT ON-SITE	REMOVE FROM SITE
TREE			
SHRUB			
CACTUS			

PRIVATELY OWNED LANDSCAPE AND IRRIGATION PROTECTION

EXISTING PRIVATELY OWNED LANDSCAPE AND IRRIGATION WITHIN TEMPORARY CONSTRUCTION EASEMENT

ALL EXISTING PRIVATELY OWNED LANDSCAPE AND IRRIGATION SHALL BE PROTECTED IN PLACE TO THE EXTENT POSSIBLE. ALL NECESSARY REMOVAL OF PLANTS AND CAPPING OF EXISTING IRRIGATION SHALL BE COORDINATED WITH THE OWNER. ALL PLANTS REMOVED SHALL BE REPLACED IN KIND AND RECONNECTED TO EXISTING PRIVATE IRRIGATION.

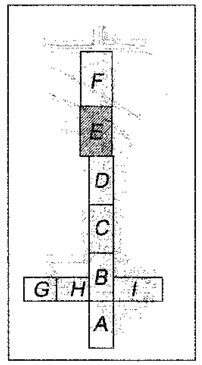

AREA KEY MAP

SCALE: N.T.S.

EXISTING LANDSCAPE PLANTS TO BE RELOCATED
RIVER PARK ENTRY - SOUTHEAST QUADRANT

BOTANICAL NAME	COMMON NAME	QUANTITY	TRANSPLANT METHOD
CHILOPSIS LINEARIS	DESERT WILLOW	2	SPADING
DASYLIRION WHEELERI	DESERT SPOON	12	DIG BY HAND
DODONAEA VISCOSA	HOPSBUSH	2	DIG BY HAND
HESPERALOE PARVIFLORA	RED YUCCA	10	DIG BY HAND
LEUCOPYLLUM SPP.	TEXAS RANGER	8	DIG BY HAND
OLNEYA TESOTA	IRONWOOD	2	SPADING
PARKINSONIA MICROPHYLLUM	FOOTHILLS PALO VERDE	1	SPADING
PROSOPIS VELUTINA	VELVET MESQUITE	3	SPADING
SENNA NEMOPHILA	GREEN CASSIA	1	DIG BY HAND

NOTE:

1. EXISTING IRRIGATED PLANTS IN SOUTHWEST QUADRANT WITHIN THE GRADING LIMIT SHALL BE TRANSPLANTED IN ONE MOVE TO A NEW LOCATION OUTSIDE THE GRADING LIMIT. CAP EXISTING IRRIGATION.
2. NEW LOCATION TO BE FLAGGED FOR APPROVAL BY PROJECT ENGINEER AND PCNRPR REPRESENTATIVE BEFORE TRANSPLANT WORK BEGINS.
3. CONNECT NEWLY TRANSPLANTED PLANTS TO EXISTING IRRIGATION USING IRRIGATION PLAN DETAILS.
4. LOCATE EXISTING IRRIGATION AND PRESERVE CONNECTION TO EXISTING IRRIGATED LANDSCAPE OUTSIDE THE GRADING LIMIT.
5. PCNRPR CONTACT: WILLIAM CONNICK (520) 877-6104.
6. ALL EXISTING TREES AND SHRUBS NOT NOTED IN PLANS TO BE TRANSPLANTED SHALL BE PROTECTED IN PLACE OR REPLACED IN KIND IF REMOVED BY CONTRACTOR.
7. SEE SECTION 806 OF THE SPECIAL PROVISIONS FOR DESCRIPTION OF WORK RELATED TO RELOCATION OF EXISTING PLANT MATERIALS
8. SEE SECTION 808 OF THE SPECIAL PROVISIONS FOR DESCRIPTION OF WORK RELATED TO RECONFIGURATION OF RECLAIMED WATER MAINLINE.

NORTH

Two working days before you dig CALL FOR THE BLUE STAKES 1-800-782-5348 Blue Stake Center CALL COLLECT

Priscilla S. Cornelio, P.E., Director

Pima County Department of Transportation

No.	Revision Description	Engineer	Date

		Date
Designed	DDS	07/09
Drawn	PB	07/09
Checked	DKM	07/09
Proj. L.A.	DDS	07/09

REGISTERED LANDSCAPE ARCHITECT 48751 DARLENE D. SHOWALTER ARIZONA U.S.A. Date Signed 7-8-09 Expires 12/31/2011

McGann & Associates
Landscape Architects and Planners
6974 North Oracle Rd., Suite 210
Tucson, Arizona 85704
Telephone: (520) 297-9540 Fax: (520) 297-9545

LA CHOLLA BLVD.
RUTHRAUFF RD. TO RIVER RD.
DEMOLITION, RELOCATION AND PRESERVATION PLAN
AREA E

Scales	1" = 40'	Sheet DP3 of DP6	Page 199 of 356

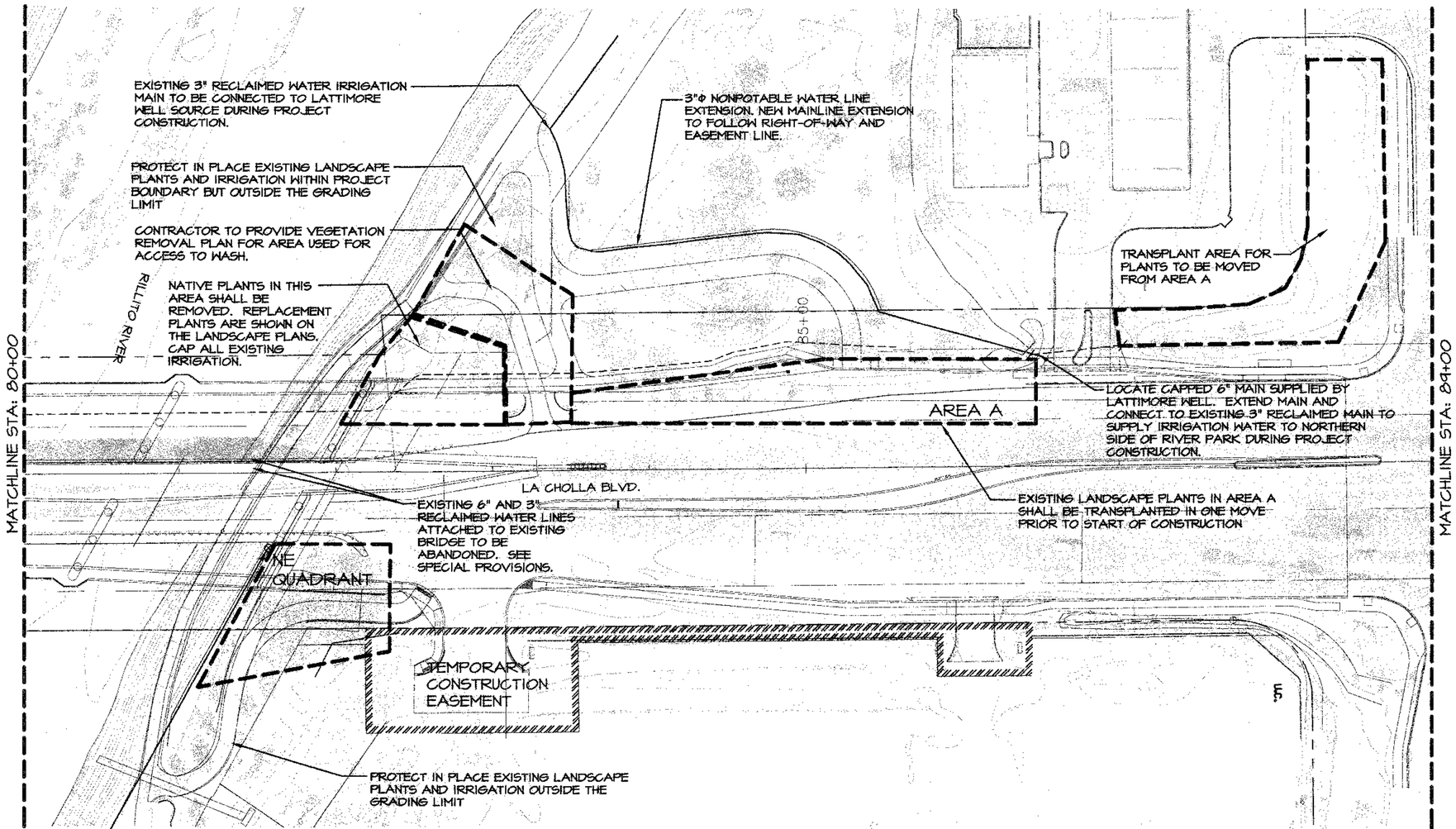

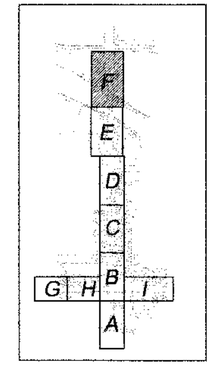

AREA KEY MAP

SCALE: N.T.S.

PRIVATELY OWNED LANDSCAPE AND IRRIGATION PROTECTION

	EXISTING PRIVATELY OWNED LANDSCAPE AND IRRIGATION WITHIN TEMPORARY CONSTRUCTION EASEMENT	ALL EXISTING PRIVATELY OWNED LANDSCAPE AND IRRIGATION SHALL BE PROTECTED IN PLACE TO THE EXTENT POSSIBLE. ALL NECESSARY REMOVAL OF PLANTS AND CAPPING OF EXISTING IRRIGATION SHALL BE COORDINATED WITH THE OWNER. ALL PLANTS REMOVED SHALL BE REPLACED IN KIND AND RECONNECTED TO EXISTING PRIVATE IRRIGATION.

EXISTING LANDSCAPE PLANTS TO BE RELOCATED
WEST SHOULDER - AREA A

BOTANICAL NAME	COMMON NAME	QUANTITY	TRANSPLANT METHOD
CHILOPSIS LINEARIS	DESERT WILLOW	5	SPADING
HESPERALOE PARVIFLORA	RED YUCCA	2	HAND DIG
LARREA TRIDENTATA	CREOSOTE	3	HAND DIG
PITHECELLOBIUM FLEXICAULE	TEXAS EBONY	2	SPADING
PROSOPIS VELUTINA	VELVET MESQUITE	5	SPADING
SIMMONDSIA CHINENSIS	JOJOBA	3	HAND DIG

EXISTING LANDSCAPE PLANTS TO BE RELOCATED
RIVER PARK ENTRY - NE QUADRANT

BOTANICAL NAME	COMMON NAME	QUANTITY	TRANSPLANT METHOD
AGAVE AMERICANA	CENTURY PLANT	1	HAND DIG
DASYLIRION WHEELERI	DESERT SPOON	4	HAND DIG
LEUCOPYLLUM SPP.	TEXAS RANGER	8	HAND DIG
NOLINA MICROCARPA	BEAR GRASS	2	HAND DIG

NOTE:

1. EXISTING IRRIGATED LANDSCAPE PLANTS WITHIN AREA A SHALL BE TRANSPLANTED IN ONE MOVE. CAP EXISTING IRRIGATION.
2. NEW LOCATION TO BE FLAGGED FOR APPROVAL BY PROJECT ENGINEER BEFORE TRANSPLANT WORK BEGINS.
3. CONNECT NEWLY TRANSPLANTED PLANTS TO EXISTING IRRIGATION USING IRRIGATION PLAN DETAILS.
4. LOCATE EXISTING IRRIGATION AND PRESERVE CONNECTION TO EXISTING IRRIGATED LANDSCAPE OUTSIDE THE GRADING LIMIT.
5. PCNRPR CONTACT: WILLIAM CONNICK (520) 877-6104.
6. ALL EXISTING TREES AND SHRUBS NOT NOTED IN PLANS TO BE TRANSPLANTED SHALL BE PROTECTED IN PLACE OR REPLACED IN KIND IF REMOVED BY THE CONTRACTOR.
7. SEE SECTION 806 OF THE SPECIAL PROVISIONS FOR DESCRIPTION OF WORK RELATED TO RELOCATION OF EXISTING PLANT MATERIALS
8. SEE SECTION 808 OF THE SPECIAL PROVISIONS FOR DESCRIPTION OF WORK RELATED TO RECONFIGURATION OF RECLAIMED WATER MAINLINE.

SYMBOL LEGEND AND KEY

PLANT	PRESERVE IN PLACE	TRANSPLANT ON-SITE	REMOVE FROM SITE
TREE			
SHRUB			
CACTUS			

NORTH

0 20 40 80

Two working days before you dig CALL FOR THE BLUE STAKES 1-800-782-5348 Blue Stake Center CALL COLLECT

Pima County Department of Transportation

Priscilla S. Cornelio, P.E., Director

No.	Revision Description	Engineer	Date

		Date
Designed	DDS	07/09
Drawn	PB	07/09
Checked	DKM	07/09
Proj. L.A.	DDS	07/09

REGISTERED LANDSCAPE ARCHITECT CERTIFICATE NO. 48751 DARLENE D. SHOWALTER Date Signed 6-2-09 ARIZONA, U.S.A. Expires 12/31/2011

McGann & Associates
Landscape Architects and Planners
6814 North Oracle Rd. Suite 210
Tucson, Arizona 85704
Telephone: (520) 297-3540 Fax: (520) 297-3545

LA CHOLLA BLVD.
RUTHRAUFF RD. TO RIVER RD.
DEMOLITION, RELOCATION AND PRESERVATION PLAN
AREA F

Scales	1" = 40'	Sheet DP4 of DP6	Page 200 of 356

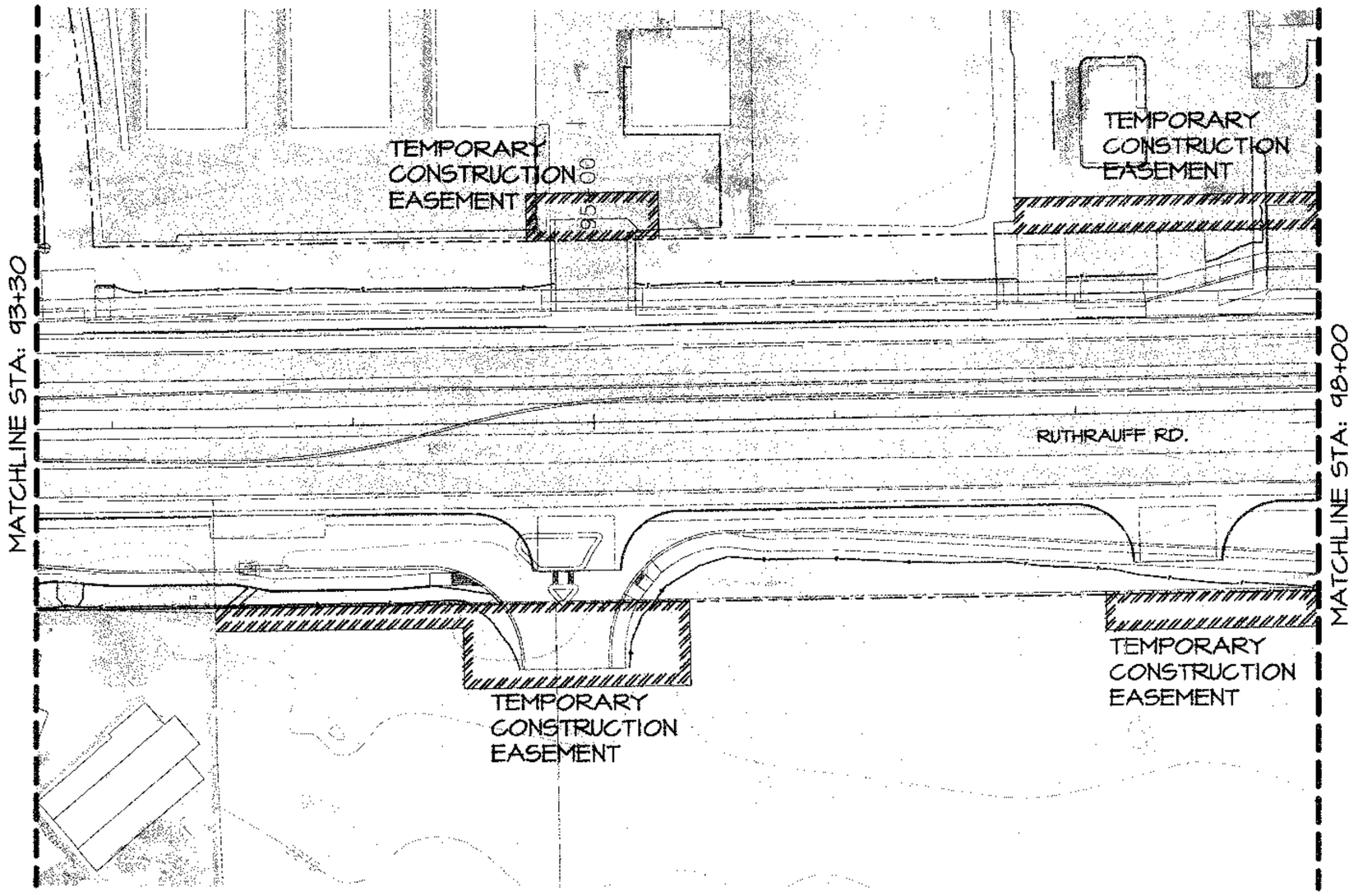

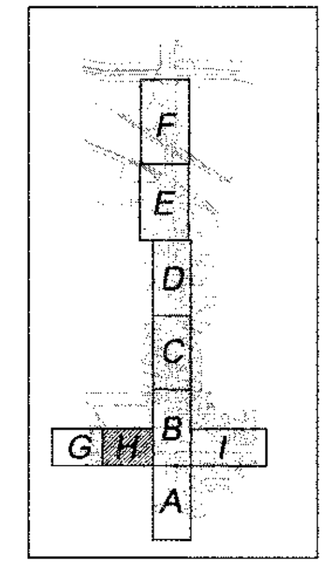

AREA KEY MAP

SCALE: N.T.S.

PRIVATELY OWNED LANDSCAPE AND IRRIGATION PROTECTION

EXISTING PRIVATELY OWNED LANDSCAPE AND IRRIGATION WITHIN TEMPORARY CONSTRUCTION EASEMENT

ALL EXISTING PRIVATELY OWNED LANDSCAPE AND IRRIGATION SHALL BE PROTECTED IN PLACE TO THE EXTENT POSSIBLE. ALL NECESSARY REMOVAL OF PLANTS AND CAPPING OF EXISTING IRRIGATION SHALL BE COORDINATED WITH THE OWNER. ALL PLANTS REMOVED SHALL BE REPLACED IN KIND AND RECONNECTED TO EXISTING PRIVATE IRRIGATION.

SYMBOL LEGEND AND KEY

PLANT	PRESERVE IN PLACE	TRANSPLANT ON-SITE	REMOVE FROM SITE
TREE			
SHRUB			
CACTUS			

NORTH

0 20 40 80

Two working days before you dig CALL FOR THE BLUE STAKES 1-800-782-5348 Blue Stake Center CALL COLLECT

Priscilla S. Cornelio, P.E., Director

No.	Revision Description	Engineer	Date

		Date
Designed	DDS	07/09
Drawn	PB	07/09
Checked	DKM	07/09
Proj. L.A.	DDS	07/09

REGISTERED LANDSCAPE ARCHITECT CERTIFICATE NO. 48751 DARLENE D. SHOWALTER Date Signed 8-7-09 ARIZONA, U.S.A.

Expires 12/31/2011

McGann & Associates
Landscape Architects and Planners
8814 North Oracle Rd. Suite 210
Tucson, Arizona 85704
Telephone: (520) 297-9540 Fax: (520) 297-9545

Pima County Department of Transportation

LA CHOLLA BLVD.
RUTHRAUFF RD. TO RIVER RD.
DEMOLITION, RELOCATION
AND PRESERVATION PLAN
AREA H

Scales	1" = 40'	Sheet DP5 of DP6	Page 201 of 356

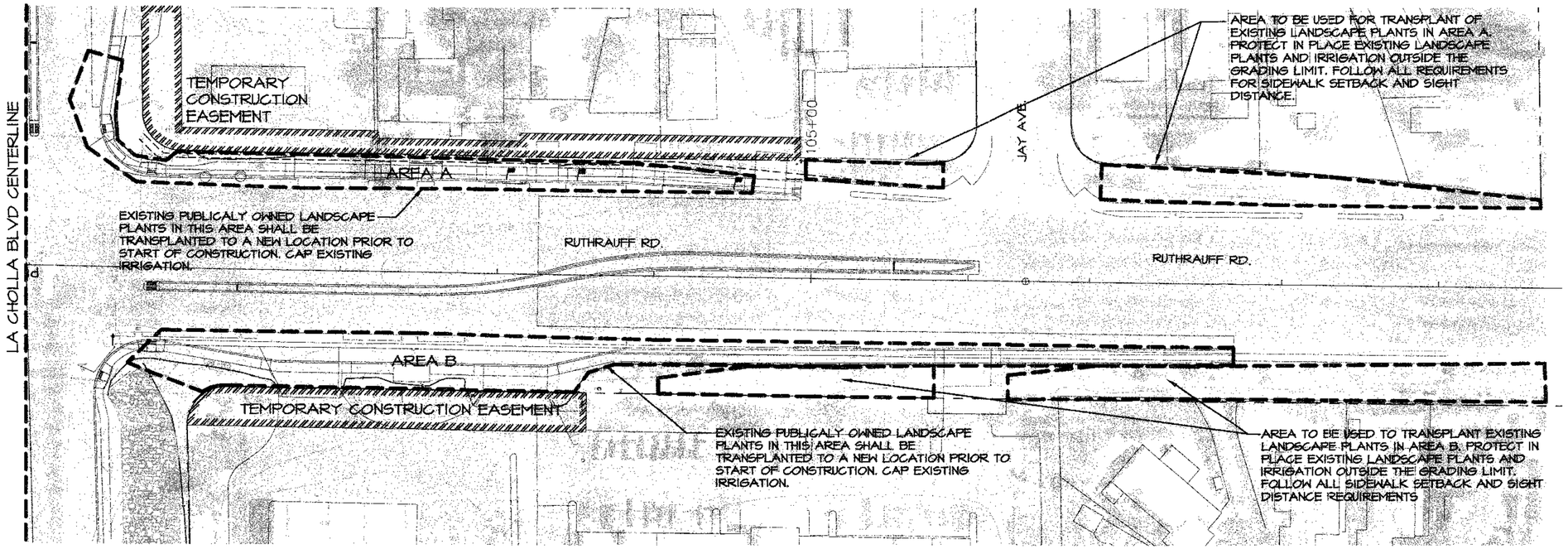

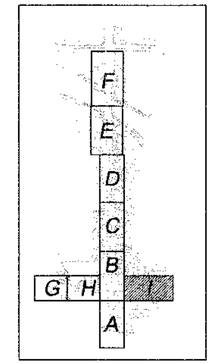

AREA KEY MAP

SCALE: N.T.S.

EXISTING LANDSCAPE PLANTS TO BE RELOCATED
RUTHRAUFF RD. - AREA A

BOTANICAL NAME	COMMON NAME	QUANTITY	TRANSPLANT METHOD
AGAVE PALMERI	PALMER'S AGAVE	1	HAND DIG
ASCLEPIAS SUBULATA	DESERT MILKWEED	1	HAND DIG
DASYLIRION LONGISSIMUM	GREEN DESERT SPOON	3	HAND DIG
DODONAEA VISCOSA	HOPSBUSH	2	HAND DIG
EUPHORBIA ANTISYPHILITICA	CANDELILLA	1	HAND DIG
HESPERALOE PARVIFLORA	RED YUCCA	5	HAND DIG
JUSTICIA CALIFORNICA	CHUPAROSA	3	HAND DIG
PENSTEMON EATONII	PENSTEMON	3	HAND DIG

EXISTING LANDSCAPE PLANTS TO BE RELOCATED
RUTHRAUFF RD. - AREA B

BOTANICAL NAME	COMMON NAME	QUANTITY	TRANSPLANT METHOD
ASCLEPIAS SUBULATA	DESERT MILKWEED	20	HAND DIG
CALLIANDRA ERIOPHYLLA	FAIRY DUSTER	14	HAND DIG
CORDIA PARVIFLORA	LITTLE LEAF CORDIA	1	HAND DIG
DALEA SPP.	DALEA	1	HAND DIG
DASYLIRION LONGISSIMUM	GREEN DESERT SPOON	3	HAND DIG
DODONAEA VISCOSA	HOPSBUSH	4	HAND DIG
EUPHORBIA ANTISYPHILITICA	CANDELILLA	1	HAND DIG
HESPERALOE PARVIFLORA	RED YUCCA	8	HAND DIG
JUSTICIA CALIFORNICA	CHUPAROSA	1	HAND DIG
LARREA TRIDENTATA	CREOSOTE	4	HAND DIG
PENSTEMON EATONII	PENSTEMON	2	HAND DIG
SIMMONDSIA CHINENSIS	JOJOBA	2	HAND DIG

PRIVATELY OWNED LANDSCAPE AND IRRIGATION PROTECTION

EXISTING PRIVATELY OWNED LANDSCAPE AND IRRIGATION WITHIN TEMPORARY CONSTRUCTION EASEMENT

ALL EXISTING PRIVATELY OWNED LANDSCAPE AND IRRIGATION SHALL BE PROTECTED IN PLACE TO THE EXTENT POSSIBLE. ALL NECESSARY REMOVAL OF PLANTS AND CAPPING OF EXISTING IRRIGATION SHALL BE COORDINATED WITH THE OWNER. ALL PLANTS REMOVED SHALL BE REPLACED IN KIND AND RECONNECTED TO EXISTING PRIVATE IRRIGATION.

NOTE:

1. EXISTING IRRIGATED LANDSCAPE PLANTS WITHIN THE GRADING LIMIT SHALL BE TRANSPLANTED IN ONE MOVE.
2. NEW LOCATION TO BE FLAGGED FOR APPROVAL BY PROJECT ENGINEER BEFORE TRANSPLANT WORK BEGINS.
3. CONNECT NEWLY TRANSPLANTED PLANTS TO EXISTING IRRIGATION USING IRRIGATION PLAN DETAILS.
4. LOCATE EXISTING IRRIGATION AND PRESERVE CONNECTION TO EXISTING IRRIGATED LANDSCAPE OUTSIDE THE GRADING LIMIT.
5. SEE SECTION 806 OF THE SPECIAL PROVISIONS FOR DESCRIPTION OF WORK RELATED TO RELOCATION OF EXISTING PLANT MATERIALS
6. ALL WORK TO RECONFIGURE EXISTING IRRIGATION SYSTEMS SHALL BE PREFORMED AS DETAILED ON THESE PLANS AND SPECIFIED IN SECTION 808 OF THE SPECIAL PROVISIONS.

SYMBOL LEGEND AND KEY

PLANT	PRESERVE IN PLACE	TRANSPLANT ON-SITE	REMOVE FROM SITE
TREE	○	⊕	⊗
SHRUB	○	○	⊗
CACTUS	◉	◉	⊗

NORTH

0 20 40 80

Two working days before you dig CALL FOR THE BLUE STAKES 1-800-782-5348 Blue Stake Center CALL COLLECT

Priscilla S. Cornelio, P.E., Director

Designed	DDS	07/09
Drawn	PB	07/09
Checked	DKM	07/09
Proj. L.A.	DDS	07/09

No.	Revision Description	Engineer	Date

REGISTERED LANDSCAPE ARCHITECT CERTIFICATE NO. 48751 DARLENE D. SHOWALTER Date Signed 6-24-09 ARIZONA, U.S.A. Expires 12/31/2011

McGann & Associates
Landscape Architects and Planners
8014 North Oracle Rd., Suite 210
Tucson, Arizona 85704
Telephone (520) 297-9540 Fax: (520) 297-9545

Pima County Department of Transportation

LA CHOLLA BLVD.
RUTHRAUFF RD. TO RIVER RD.
DEMOLITION, RELOCATION AND PRESERVATION PLAN
AREA 1

Scales	1" = 40'	Sheet DP6 of DP6	Page 202 of 356

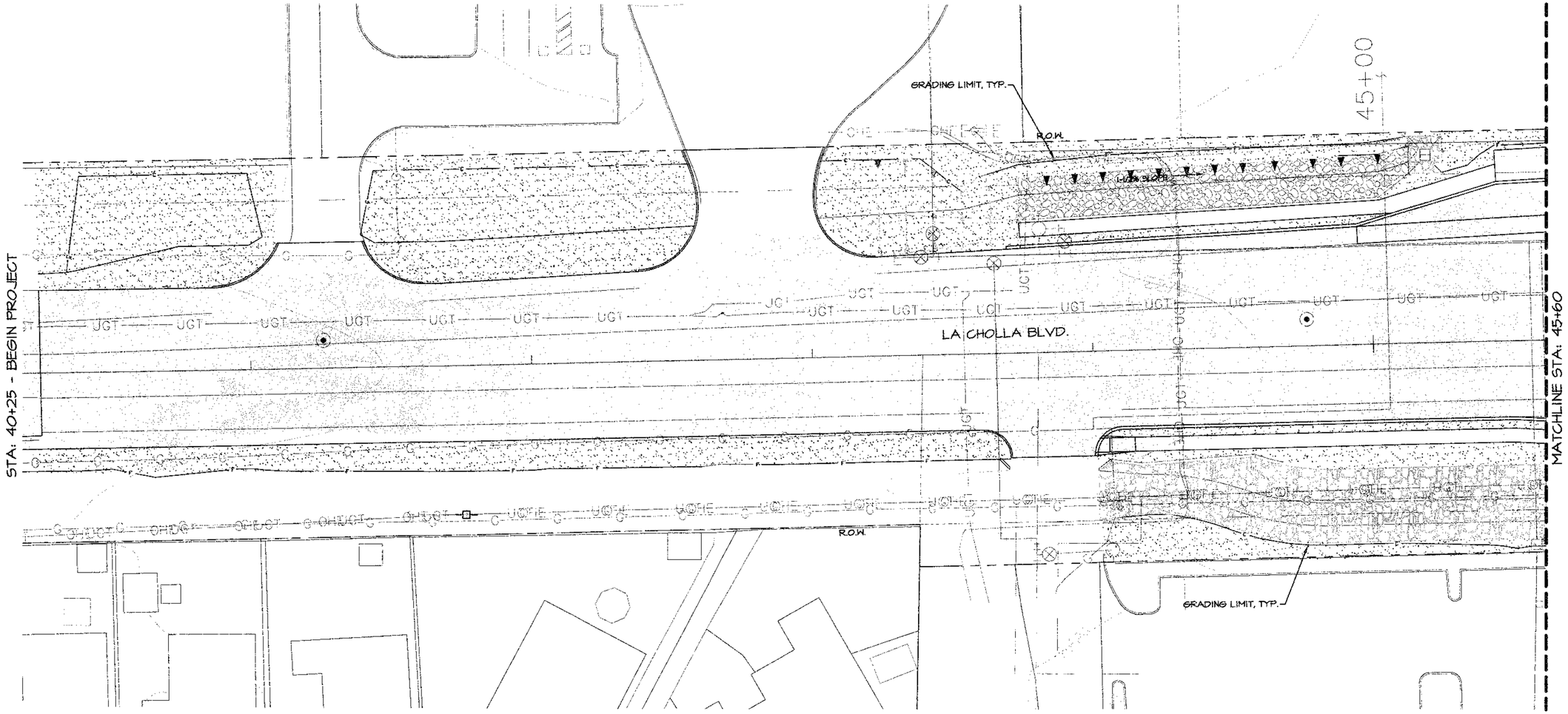

HATCH LEGEND

- SIGHT VISIBILITY TRAINGLE
- DECOMPOSED GRANITE SURFACING
- ROCK MULCH NATIVE STONE RIP-RAP
- INTEGRALLY COLORED CONCRETE PAVING

NOTE:

1. TREES TO BE PLANTED A MINIMUM DISTANCE OF 10 FEET AWAY FROM SEWER LINES AND OVERHEAD POWER LINES.
2. TREES TO BE PLANTED A MINIMUM OF 8 FEET FROM SIDEWALK AND 6 FEET FROM CURB. SHRUBS TO BE PLANTED A MINIMUM OF 4 FEET FROM SIDEWALK OR CURBS.
3. ANY LANDSCAPING LOCATED WITHIN TEN (10) FEET HORIZONTAL, OF ANY PUBLIC SANITARY SEWER MAINS AND WITH THE PLANTING GUIDELINES CONTAINED WITHIN THE CITY OF TUCSON/PIMA COUNTY STANDARD DETAIL WWM A-4.
4. SEE LANDSCAPE DEMOLITION, RELOCATION ADN PRESERVATION PLANS FOR WORK RELATED TO EXISTING PRIVATE AND PUBLIC LANDSCAPE AND IRRIGATION WITH THE PROJECT AREA.
5. SEE SHEET L16 FOR LANDSCAPE SCHEDULE AND DETAILS.

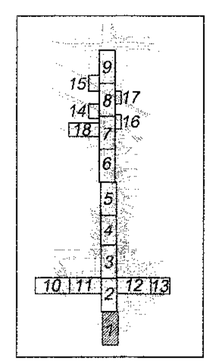

AREA KEY MAP

SCALE: N.T.S.

NORTH

0 10 20 40

Two working days before you dig CALL FOR THE BLUE STAKES 1-800-782-5348 Blue Stake Center CALL COLLECT

Priscilla S. Cornelio, P.E., Director

Pima County Department of Transportation

No.	Revision Description	Engineer	Date

		Date
Designed	DDS	07/09
Drawn	PB	07/09
Checked	DKM	07/09
Proj. L.A.	DDS	07/09

REGISTERED LANDSCAPE ARCHITECT CERTIFICATE NO. 48751 DARLENE D. SHOWALTER Date Signed 6-26-09 ARIZONA, U.S.A. Expires 12/31/2011

McGann & Associates
Landscape Architects and Planners
6884 North Oracle Rd., Suite 210
Tucson, Arizona 85704
Telephone: (520) 297-9540 Fax: (520) 297-9548

LA CHOLLA BLVD.
RUTHRAUFF RD. TO RIVER RD.
LANDSCAPE PLAN
AREA 1

Scales	1" = 20'	Sheet L1 of L35	Page 203 of 356

MATCHLINE STA: 98+70 - SEE SHEET L11

MATCHLINE STA: 45+60

MATCHLINE STA: 51+00

MATCHLINE STA: 101+30 - SEE SHEET L12

RUTHRAUFF RD.

80'-0" TYP.

GRADING LIMIT, TYP.

R.O.W.

LA CHOLLA BLVD.

UGT

HATCH LEGEND

- SIGHT VISIBILITY TRAINGLE
- DECOMPOSED GRANITE SURFACING
- ROCK MULCH NATIVE STONE RIP-RAP
- INTEGRALLY COLORED CONCRETE PAVING

NOTE:

1. TREES TO BE PLANTED A MINIMUM DISTANCE OF 10 FEET AWAY FROM SEWER LINES AND OVERHEAD POWER LINES.
2. TREES TO BE PLANTED A MINIMUM OF 8 FEET FROM SIDEWALK AND 6 FEET FROM CURB. SHRUBS TO BE PLANTED A MINIMUM OF 4 FEET FROM SIDEWALK OR CURBS.
3. ANY LANDSCAPING LOCATED WITHIN TEN (10) FEET HORIZONTAL, OF ANY PUBLIC SANITARY SEWER MAINS AND WITH THE PLANTING GUIDELINES CONTAINED WITHIN THE CITY OF TUCSON/PIMA COUNTY STANDARD DETAIL WWM A-4.
4. SEE LANDSCAPE DEMOLITION, RELOCATION ADN PRESERVATION PLANS FOR WORK RELATED TO EXISTING PRIVATE AND PUBLIC LANDSCAPE AND IRRIGATION WITH THE PROJECT AREA.
5. SEE SHEET L16 FOR LANDSCAPE SCHEDULE AND DETAILS.

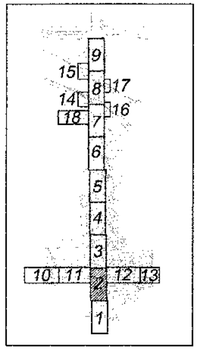

AREA KEY MAP

SCALE: N.T.S.

NORTH

0 10 20 40

Two working days before you dig CALL FOR THE BLUE STAKES 1-800-782-5348 Blue Stake Center CALL COLLECT

Priscilla S. Cornelio, P.E., Director

Pima County Department of Transportation

Designed	DDS	07/09
Drawn	PB	07/09
Checked	DKM	07/09
Proj. L.A.	DDS	07/09

No.	Revision Description	Engineer	Date

REGISTERED LANDSCAPE ARCHITECT CERTIFICATE NO. 48751 DARLENE D. SHOWALTER ARIZONA U.S.A.

Expires 12/31/2011

McGann & Associates
Landscape Architects and Planners
6914 North Oracle Rd., Suite 210
Tucson, Arizona 85704
Telephone: (520) 297-9540 Fax: (520) 297-9545

LA CHOLLA BLVD.
RUTHRAUFF RD. TO RIVER RD.
LANDSCAPE PLAN
AREA 2

Scales	1" = 20'	Sheet L2 of L35	Page 204 of 356

MATCHLINE STA. 51+00

GRADING LIMIT, TYP.

R.O.W.

UNIVOLY

LA CHOLLA BLVD.

50'-0" TYP.

CALLE NARCISO

55+00

MATCHLINE STA. 56+40

NOREEN ST.

GRADING LIMIT, TYP.

HATCH LEGEND

- SIGHT VISIBILITY TRAINGLE
- DECOMPOSED GRANITE SURFACING
- ROCK MULCH NATIVE STONE RIP-RAP
- INTEGRALLY COLORED CONCRETE PAVING

NOTE:

1. TREES TO BE PLANTED A MINIMUM DISTANCE OF 10 FEET AWAY FROM SEWER LINES AND OVERHEAD POWER LINES.
2. TREES TO BE PLANTED A MINIMUM OF 8 FEET FROM SIDEWALK AND 6 FEET FROM CURB. SHRUBS TO BE PLANTED A MINIMUM OF 4 FEET FROM SIDEWALK OR CURBS.
3. ANY LANDSCAPING LOCATED WITHIN TEN (10) FEET HORIZONTAL, OF ANY PUBLIC SANITARY SEWER MAINS AND WITH THE PLANTING GUIDELINES CONTAINED WITHIN THE CITY OF TUCSON/PIMA COUNTY STANDARD DETAIL WWM A-4.
4. SEE LANDSCAPE DEMOLITION, RELOCATION ADN PRESERVATION PLANS FOR WORK RELATED TO EXISTING PRIVATE AND PUBLIC LANDSCAPE AND IRRIGATION WITH THE PROJECT AREA.
5. SEE SHEET L16 FOR LANDSCAPE SCHEDULE AND DETAILS.

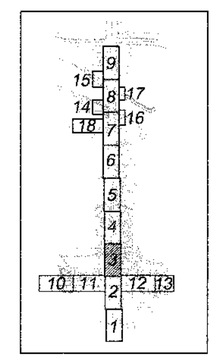

AREA KEY MAP

SCALE: N.T.S.

NORTH

0 10 20 40

Two working days before you dig CALL FOR THE BLUE STAKES 1-800-782-5348 Blue Stake Center CALL COLLECT

No.	Revision Description	Engineer	Date

		Date
Designed	DDS	07/09
Drawn	PB	07/09
Checked	DKM	07/09
Proj. L.A.	DDS	07/09

Priscilla S. Cornelio, P.E., Director

Pima County Department of Transportation

REGISTERED LANDSCAPE ARCHITECT CERTIFICATE NO. 48751 DARLENE D. SHOWALTER Date Signed ARIZONA, U.S.A. Expires 12/31/2011

McGann & Associates
Landscape Architects and Planners
6816 North Oracle Rd. Suite 210
Tucson, Arizona 85704
Telephone: (520) 297-9540 Fax: (520) 297-9545

LA CHOLLA BLVD.
RUTHRAUFF RD. TO RIVER RD.
LANDSCAPE PLAN
AREA 3

Scales	1" = 20'	Sheet L3 of L35	Page 205 of 356

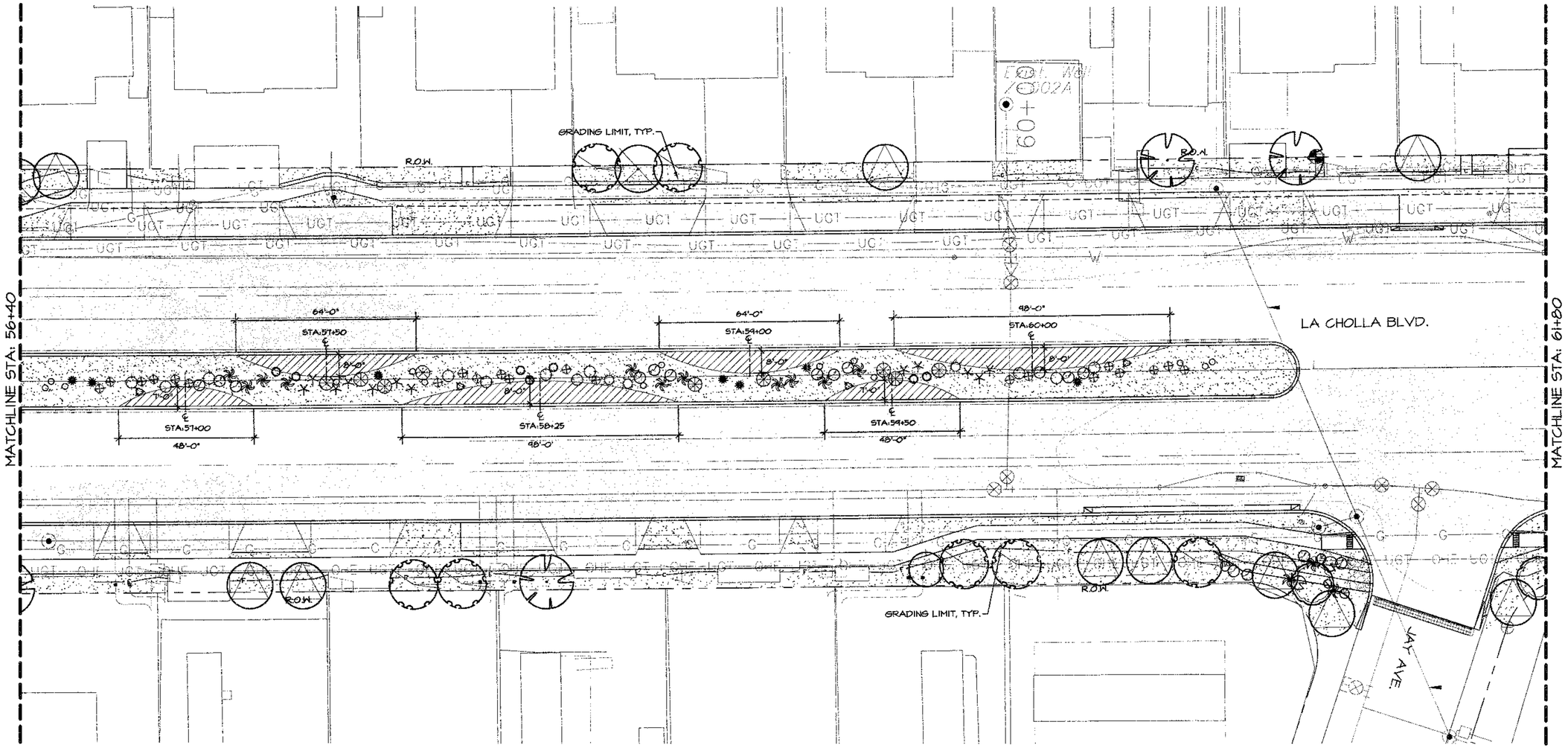

HATCH LEGEND

- SIGHT VISIBILITY TRAINGLE
- DECOMPOSED GRANITE SURFACING
- ROCK MULCH NATIVE STONE RIP-RAP
- INTEGRALLY COLORED CONCRETE PAVING

NOTE:

1. TREES TO BE PLANTED A MINIMUM DISTANCE OF 10 FEET AWAY FROM SEWER LINES AND OVERHEAD POWER LINES.
2. TREES TO BE PLANTED A MINIMUM OF 8 FEET FROM SIDEWALK AND 6 FEET FROM CURB. SHRUBS TO BE PLANTED A MINIMUM OF 4 FEET FROM SIDEWALK OR CURBS.
3. ANY LANDSCAPING LOCATED WITHIN TEN (10) FEET HORIZONTAL, OF ANY PUBLIC SANITARY SEWER MAINS AND WITH THE PLANTING GUIDELINES CONTAINED WITHIN THE CITY OF TUCSON/PIMA COUNTY STANDARD DETAIL WWM A-4.
4. SEE LANDSCAPE DEMOLITION, RELOCATION ADN PRESERVATION PLANS FOR WORK RELATED TO EXISTING PRIVATE AND PUBLIC LANDSCAPE AND IRRIGATION WITH THE PROJECT AREA.
5. SEE SHEET L16 FOR LANDSCAPE SCHEDULE AND DETAILS.

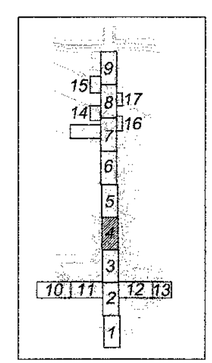

AREA KEY MAP

SCALE: N.T.S.

NORTH

0 10 20 40

Two working days before you dig CALL FOR THE BLUE STAKES 1-800-782-5348 Blue Stake Center CALL COLLECT

Priscilla S. Cornelio, P.E., Director

		Date
Designed	DDS	07/09
Drawn	PB	07/09
Checked	DKM	07/09
Proj. L.A.	DDS	07/09

No.	Revision Description	Engineer	Date

REGISTERED LANDSCAPE ARCHITECT CERTIFICATE NO. 48751 DARLENE D. SHOWALTER ARIZONA, U.S.A.
Expires 12/31/2011

McGann & Associates
Landscape Architects and Planners
8814 North Oracle Rd. Suite 210
Tucson, Arizona 85704
Telephone (520) 297-5540 Fax (520) 297-3545

Pima County Department of Transportation

LA CHOLLA BLVD.
RUTHRAUFF RD. TO RIVER RD.
LANDSCAPE PLAN
AREA 4

Scales	1" = 20'	Sheet L4 of L35	Page 206 of 356

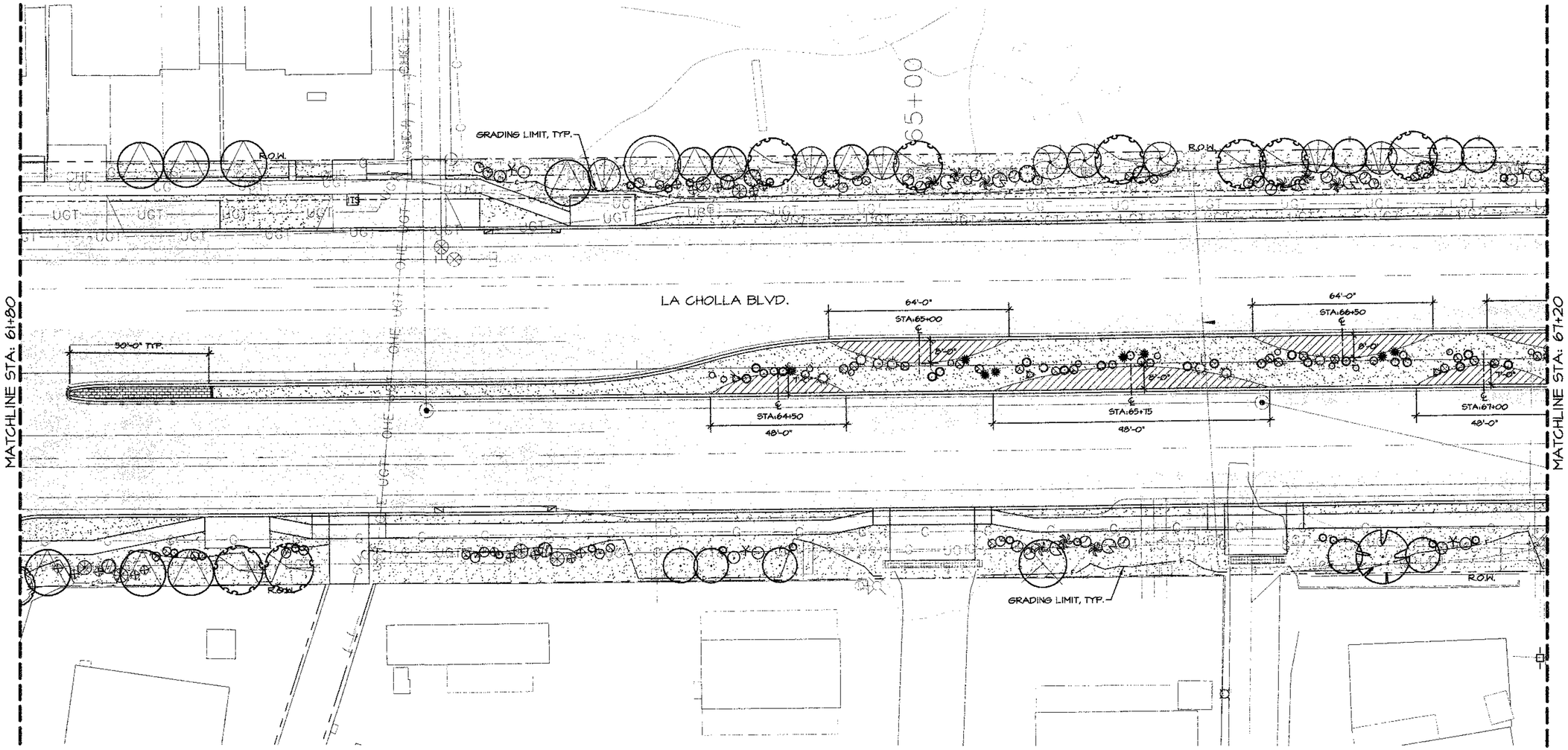

HATCH LEGEND

- SIGHT VISIBILITY TRAINGLE
- DECOMPOSED GRANITE SURFACING
- ROCK MULCH NATIVE STONE RIP-RAP
- INTEGRALLY COLORED CONCRETE PAVING

NOTE:

1. TREES TO BE PLANTED A MINIMUM DISTANCE OF 10 FEET AWAY FROM SEWER LINES AND OVERHEAD POWER LINES.
2. TREES TO BE PLANTED A MINIMUM OF 8 FEET FROM SIDEWALK AND 6 FEET FROM CURB. SHRUBS TO BE PLANTED A MINIMUM OF 4 FEET FROM SIDEWALK OR CURBS.
3. ANY LANDSCAPING LOCATED WITHIN TEN (10) FEET HORIZONTAL, OF ANY PUBLIC SANITARY SEWER MAINS AND WITH THE PLANTING GUIDELINES CONTAINED WITHIN THE CITY OF TUCSON/PIMA COUNTY STANDARD DETAIL WWM A-4.
4. SEE LANDSCAPE DEMOLITION, RELOCATION ADN PRESERVATION PLANS FOR WORK RELATED TO EXISTING PRIVATE AND PUBLIC LANDSCAPE AND IRRIGATION WITH THE PROJECT AREA.
5. SEE SHEET L16 FOR LANDSCAPE SCHEDULE AND DETAILS.

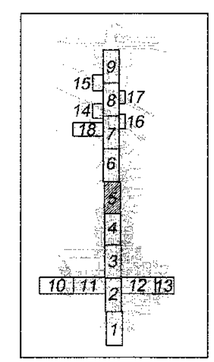

AREA KEY MAP

SCALE: N.T.S.

NORTH

0 10 20 40

Two working days before you dig CALL FOR THE BLUE STAKES 1-800-782-5348 Blue Stake Center CALL COLLECT

No.	Revision Description	Engineer	Date

		Date
Designed	DDS	07/09
Drawn	PB	07/09
Checked	DKM	07/09
Proj. L.A.	DDS	07/09

Priscilla S. Cornelio, P.E., Director

Pima County Department of Transportation

REGISTERED LANDSCAPE ARCHITECT CERTIFICATE NO. 48751 DARLENE D. SHOWALTER Date Signed 07/17/09 ARIZONA, U.S.A. Expires 12/31/2011

McGann & Associates
Landscape Architects and Planners
6914 North Oracle Rd., Suite 210
Tucson, Arizona 85704
Telephone: (520) 297-9540 Fax: (520) 297-9545

LA CHOLLA BLVD.
RUTHRAUFF RD. TO RIVER RD.
LANDSCAPE PLAN
AREA 5

Scales	1" = 20'	Sheet L5 of L35	Page 207 of 356

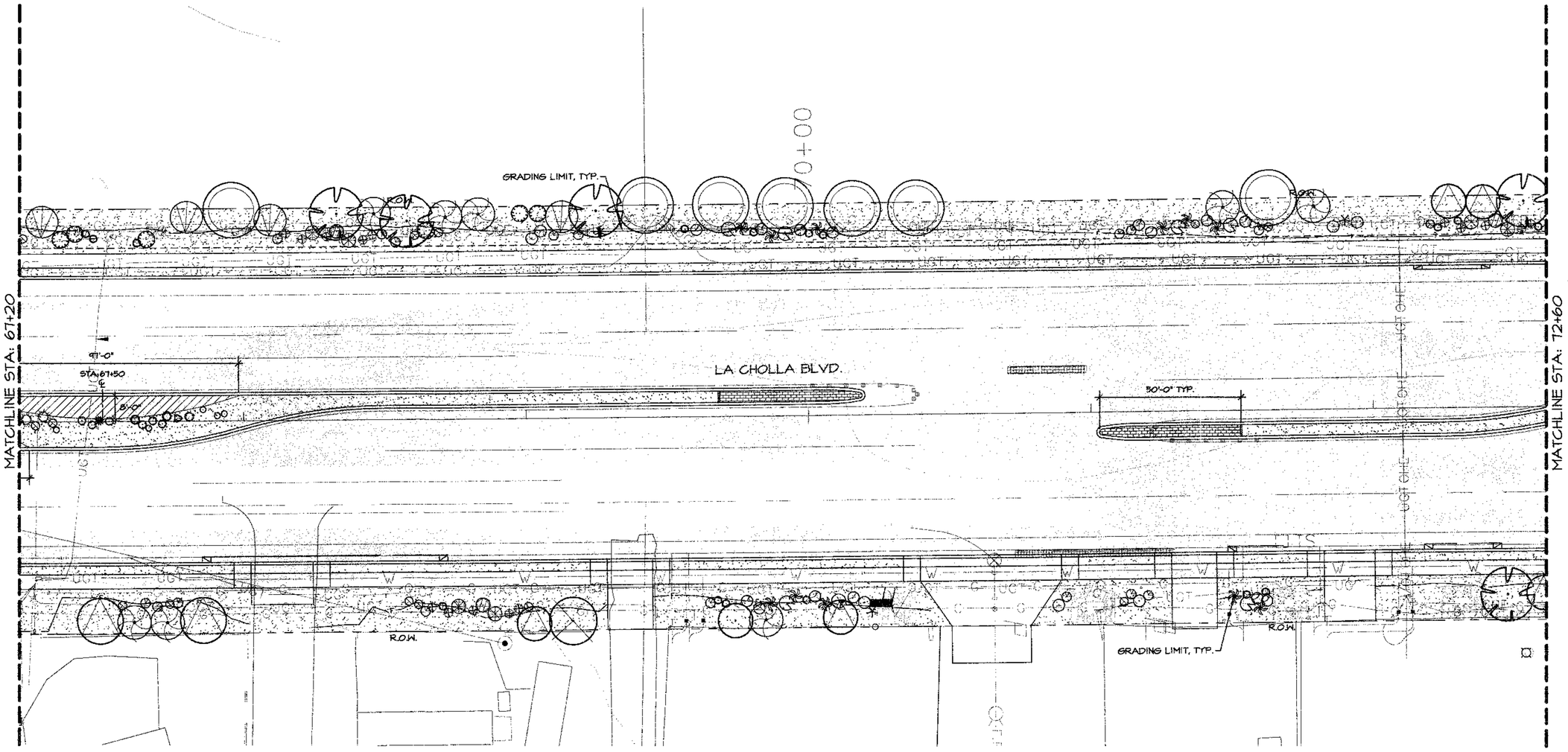

HATCH LEGEND

- SIGHT VISIBILITY TRAINGLE
- DECOMPOSED GRANITE SURFACING
- ROCK MULCH NATIVE STONE RIP-RAP
- INTEGRALLY COLORED CONCRETE PAVING

NOTE:

1. TREES TO BE PLANTED A MINIMUM DISTANCE OF 10 FEET AWAY FROM SEWER LINES AND OVERHEAD POWER LINES.
2. TREES TO BE PLANTED A MINIMUM OF 8 FEET FROM SIDEWALK AND 6 FEET FROM CURB. SHRUBS TO BE PLANTED A MINIMUM OF 4 FEET FROM SIDEWALK OR CURBS.
3. ANY LANDSCAPING LOCATED WITHIN TEN (10) FEET HORIZONTAL, OF ANY PUBLIC SANITARY SEWER MAINS AND WITH THE PLANTING GUIDELINES CONTAINED WITHIN THE CITY OF TUCSON/PIMA COUNTY STANDARD DETAIL WM A-4.
4. SEE LANDSCAPE DEMOLITION, RELOCATION ADN PRESERVATION PLANS FOR WORK RELATED TO EXISTING PRIVATE AND PUBLIC LANDSCAPE AND IRRIGATION WITH THE PROJECT AREA.
5. SEE SHEET L16 FOR LANDSCAPE SCHEDULE AND DETAILS.

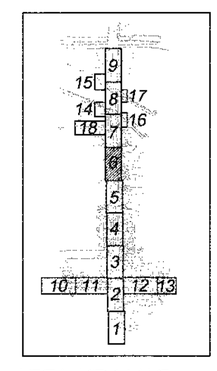

AREA KEY MAP

SCALE: N.T.S.

NORTH

0 10 20 40

Two working days before you dig CALL FOR THE BLUE STAKES 1-800-782-5348 Blue Stake Center CALL COLLECT

Priscilla S. Cornelio, P.E., Director

		Date
Designed	DDS	07/09
Drawn	PB	07/09
Checked	DKM	07/09
Proj. L.A.	DDS	07/09

No.	Revision Description	Engineer	Date

REGISTERED LANDSCAPE ARCHITECT CERTIFICATE NO. 48751 DARLENE D. SHOWALTER Date Signed ARIZONA, U.S.A. Expires 12/31/2011

McGann & Associates
Landscape Architects and Planners
6814 North Oracle Rd., Suite 210
Tucson, Arizona 85704
Telephone: (520) 297-9540 Fax: (520) 297-9545

Pima County Department of Transportation

LA CHOLLA BLVD.
RUTHRAUFF RD. TO RIVER RD.
LANDSCAPE PLAN
AREA 6

Scales	1" = 20'	Sheet L6 of L35	Page 208 of 356

SEE SHEET L15 - AREA 18

CURTIS RD.

R.O.W.

GRADING LIMIT, TYP.

NEW RIVER PARK ENTRY WALL-B, SEE DETAIL SHEET L-34.

MATCHLINE STA: 72+60

MATCHLINE STA: 78+00

LA CHOLLA BLVD.

50'-0" TYP.

50'-0" TYP.

NEW RIVER PARK ENTRY WALL-A, SEE DETAIL SHEET L-34.

R.O.W.

GRADING LIMIT, TYP.

GRADING LIMIT, TYP.

SEE SHEET L14 - AREA 16

HATCH LEGEND	
	SIGHT VISIBILITY TRAINGLE
	DECOMPOSED GRANITE SURFACING
	ROCK MULCH NATIVE STONE RIP-RAP
	INTEGRALLY COLORED CONCRETE PAVING

NOTE:

1. TREES TO BE PLANTED A MINIMUM DISTANCE OF 10 FEET AWAY FROM SEWER LINES AND OVERHEAD POWER LINES.
2. TREES TO BE PLANTED A MINIMUM OF 8 FEET FROM SIDEWALK AND 6 FEET FROM CURB. SHRUBS TO BE PLANTED A MINIMUM OF 4 FEET FROM SIDEWALK OR CURBS.
3. ANY LANDSCAPING LOCATED WITHIN TEN (10) FEET HORIZONTAL, OF ANY PUBLIC SANITARY SEWER MAINS AND WITH THE PLANTING GUIDELINES CONTAINED WITHIN THE CITY OF TUCSON/PIMA COUNTY STANDARD DETAIL WNM A-4.
4. SEE LANDSCAPE DEMOLITION, RELOCATION ADN PRESERVATION PLANS FOR WORK RELATED TO EXISTING PRIVATE AND PUBLIC LANDSCAPE AND IRRIGATION WITH THE PROJECT AREA.
5. SEE SHEET L16 FOR LANDSCAPE SCHEDULE AND DETAILS.

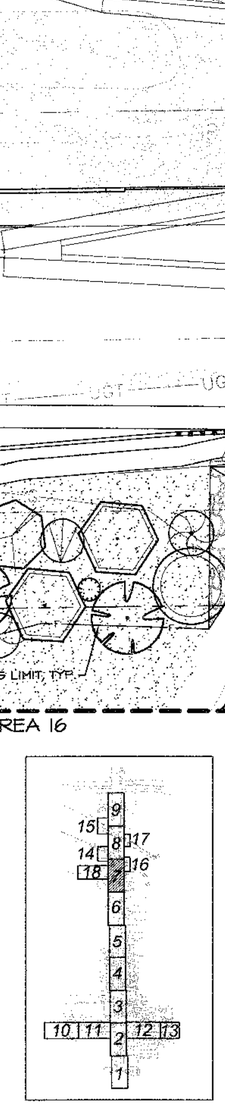

AREA KEY MAP

SCALE: N.T.S.

NORTH

0 10 20 40

Two working days before you dig CALL FOR THE "BLUE STAKES" 1-800-782-5348 Blue Stake Center CALL COLLECT

Pima County Department of Transportation

Priscilla S. Cornelio, P.E., Director

		Date
Designed	DDS	07/09
Drawn	PB	07/09
Checked	DKM	07/09
Proj. L.A.	DDS	07/09

No.	Revision Description	Engineer	Date

REGISTERED LANDSCAPE ARCHITECT CERTIFICATE NO. 48751 DARLENE D. SHOWALTER Date Signed 4-2-09 ARIZONA, U.S.A. Expires 12/31/2011

McGann & Associates
Landscape Architects and Planners
6814 North Oracle Rd., Suite 210
Tucson, Arizona 85704
Telephone: (520) 297-9540 Fax: (520) 297-9545

LA CHOLLA BLVD.
RUTHRAUFF RD. TO RIVER RD.

LANDSCAPE PLAN
AREA 7

Scales	1" = 20'	Sheet L7 of L35	Page 209 of 356

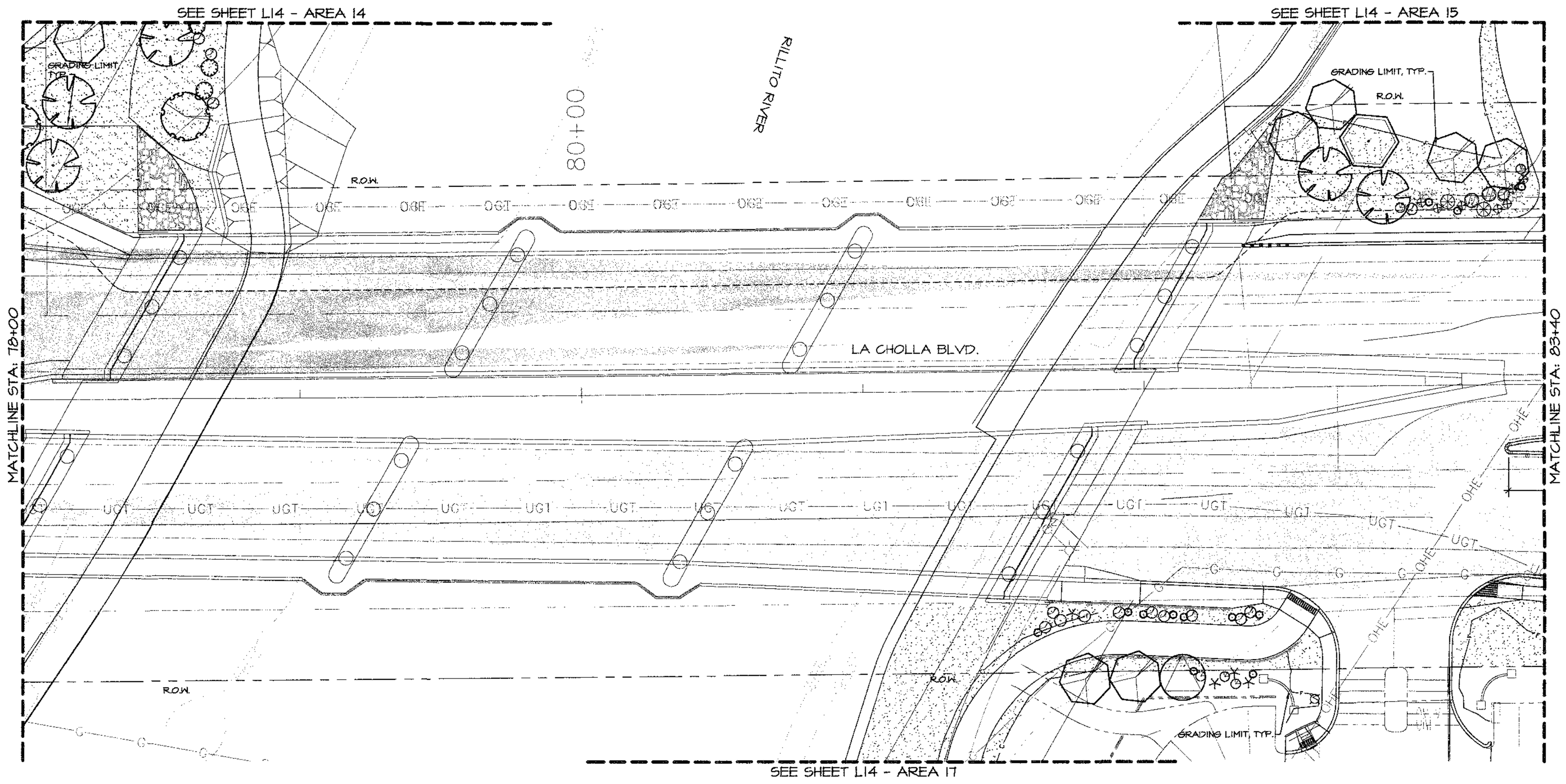

HATCH LEGEND

- SIGHT VISIBILITY TRAINGLE
- DECOMPOSED GRANITE SURFACING
- ROCK MULCH NATIVE STONE RIP-RAP
- INTEGRALLY COLORED CONCRETE PAVING

NOTE:

1. TREES TO BE PLANTED A MINIMUM DISTANCE OF 10 FEET AWAY FROM SEWER LINES AND OVERHEAD POWER LINES.
2. TREES TO BE PLANTED A MINIMUM OF 8 FEET FROM SIDEWALK AND 6 FEET FROM CURB. SHRUBS TO BE PLANTED A MINIMUM OF 4 FEET FROM SIDEWALK OR CURBS.
3. ANY LANDSCAPING LOCATED WITHIN TEN (10) FEET HORIZONTAL, OF ANY PUBLIC SANITARY SEWER MAINS AND WITH THE PLANTING GUIDELINES CONTAINED WITHIN THE CITY OF TUCSON/PIMA COUNTY STANDARD DETAIL WWM A-4.
4. SEE LANDSCAPE DEMOLITION, RELOCATION ADN PRESERVATION PLANS FOR WORK RELATED TO EXISTING PRIVATE AND PUBLIC LANDSCAPE AND IRRIGATION WITH THE PROJECT AREA.
5. SEE SHEET L16 FOR LANDSCAPE SCHEDULE AND DETAILS.

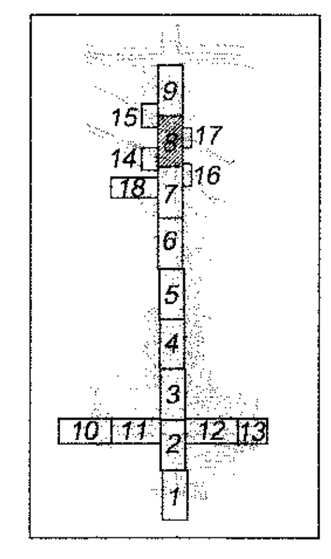

AREA KEY MAP

SCALE: N.T.S.

NORTH

0 10 20 40

Two working days before you dig CALL FOR THE BLUE STAKES 1-800-782-5348 Blue Stake Center CALL COLLECT

Pima County Department of Transportation

Priscilla S. Cornelio, P.E., Director

Designed	DDS	07/09
Drawn	PB	07/09
Checked	DKM	07/09
Proj. L.A.	DDS	07/09

No.	Revision Description	Engineer	Date

REGISTERED LANDSCAPE ARCHITECT CERTIFICATE NO. 48751 DARLENE D. SHOWALTER Date Signed 7-7-09 ARIZONA, U.S.A. Expires 12/31/2011

McGann & Associates
Landscape Architects and Planners
6884 North Oracle Rd., Suite 210
Tucson, Arizona 85704
Telephone (520) 297-9540 Fax (520) 297-9545

LA CHOLLA BLVD.
RUTHRAUFF RD. TO RIVER RD.
LANDSCAPE PLAN
AREA 8

Scales	1" = 20'	Sheet L8 of L35	Page 210 of 356

SEE SHEET L14 - AREA 15

GRADING LIMIT, TYP.

R.O.W.

NEW RIVER PARK ENTRY WALL-C, SEE DETAIL SHEET L-34.

LA CHOLLA BLVD.

MATCHLINE STA: 83+40

MATCHLINE STA: 88+80

50'-0" TYP.

R.O.W.

GRADING LIMIT, TYP.

HATCH LEGEND	
	SIGHT VISIBILITY TRAINGLE
	DECOMPOSED GRANITE SURFACING
	ROCK MULCH NATIVE STONE RIP-RAP
	INTEGRALLY COLORED CONCRETE PAVING

NOTE:

1. TREES TO BE PLANTED A MINIMUM DISTANCE OF 10 FEET AWAY FROM SEWER LINES AND OVERHEAD POWER LINES.
2. TREES TO BE PLANTED A MINIMUM OF 8 FEET FROM SIDEWALK AND 6 FEET FROM CURB. SHRUBS TO BE PLANTED A MINIMUM OF 4 FEET FROM SIDEWALK OR CURBS.
3. ANY LANDSCAPING LOCATED WITHIN TEN (10) FEET HORIZONTAL, OF ANY PUBLIC SANITARY SEWER MAINS AND WITH THE PLANTING GUIDELINES CONTAINED WITHIN THE CITY OF TUCSON/PIMA COUNTY STANDARD DETAIL W&M A-4.
4. SEE LANDSCAPE DEMOLITION, RELOCATION ADN PRESERVATION PLANS FOR WORK RELATED TO EXISTING PRIVATE AND PUBLIC LANDSCAPE AND IRRIGATION WITH THE PROJECT AREA.
5. SEE SHEET L16 FOR LANDSCAPE SCHEDULE AND DETAILS.

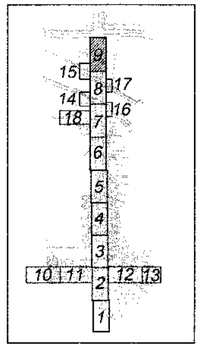

AREA KEY MAP

SCALE: N.T.S.

NORTH

0 10 20 40

Two working days before you dig CALL FOR THE BLUE STAKES 1-800-782-5348 Blue Stake Center CALL COLLECT

Priscilla S. Cornelio, P.E., Director

Pima County Department of Transportation

Designed	DDS	Date 07/09
Drawn	PB	07/09
Checked	DKM	07/09
Proj. L.A.	DDS	07/09

No.	Revision Description	Engineer	Date

REGISTERED LANDSCAPE ARCHITECT CERTIFICATE NO. 48751 DARLENE D. SHOWALTER ARIZONA, U.S.A. Expires 12/31/2011

McGann & Associates
Landscape Architects and Planners
6614 North Oracle Rd. Suite 210
Tucson, Arizona 85704
Telephone: (520) 297-9540 Fax: (520) 297-9545

LA CHOLLA BL VD.
RUTHRAUFF RD. TO RIVER RD.
LANDSCAPE PLAN
AREA 9

Scales	1" = 20'	Sheet L9 of L35	Page 211 of 356

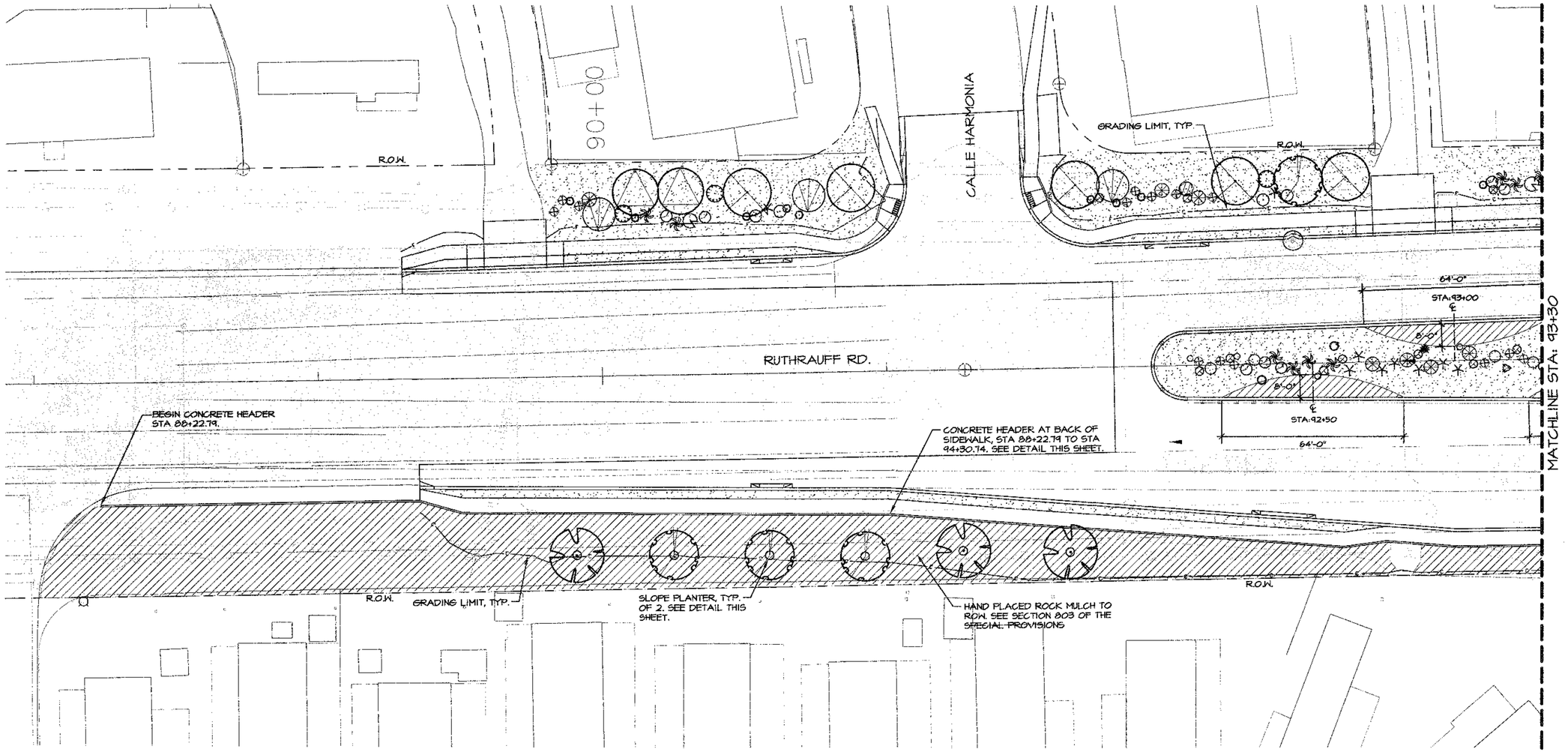

HATCH LEGEND

- SIGHT VISIBILITY TRAINGLE
- DECOMPOSED GRANITE SURFACING
- ROCK MULCH NATIVE STONE RIP-RAP
- INTEGRALLY COLORED CONCRETE PAVING

NOTE:

1. TREES TO BE PLANTED A MINIMUM DISTANCE OF 10 FEET AWAY FROM SEWER LINES AND OVERHEAD POWER LINES.
2. TREES TO BE PLANTED A MINIMUM OF 8 FEET FROM SIDEWALK AND 6 FEET FROM CURB. SHRUBS TO BE PLANTED A MINIMUM OF 4 FEET FROM SIDEWALK OR CURBS.
3. ANY LANDSCAPINGS LOCATED WITHIN TEN (10) FEET HORIZONTAL, OF ANY PUBLIC SANITARY SEWER MAINS AND WITH THE PLANTING GUIDELINES CONTAINED WITHIN THE CITY OF TUCSON/PIMA COUNTY STANDARD DETAIL WWM A-4.
4. SEE LANDSCAPE DEMOLITION, RELOCATION ADN PRESERVATION PLANS FOR WORK RELATED TO EXISTING PRIVATE AND PUBLIC LANDSCAPE AND IRRIGATION WITH THE PROJECT AREA.
5. SEE SHEET L16 FOR LANDSCAPE SCHEDULE AND DETAILS.

NOTES:

1. PROVIDE EXPANSION JOINTS EVERY 20' MAX. AND CONTROL JOINTS EVERY 10' MAX.
2. PROVIDE 1/2" BITUMINOUS JOINT FILLER WHEREVER EDGER MEETS EXISTING CONSTRUCTION.

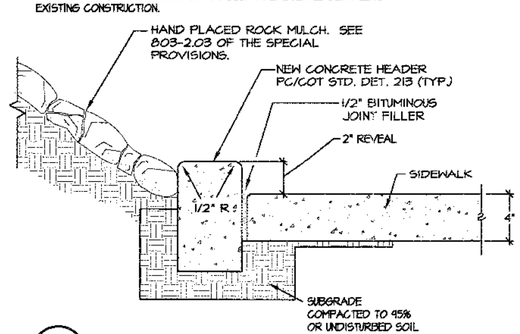

1 CONCRETE EDGER/HEADER

SCALE: N.T.S. HS-224

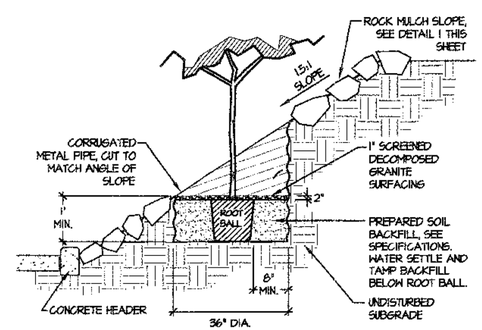

2 SLOPE PLANTER - CORRUGATED METAL PIPE

SCALE: N.T.S. FILENAME

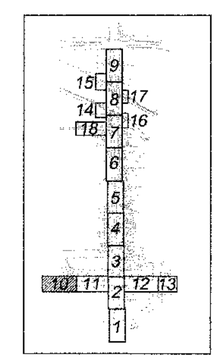

AREA KEY MAP

SCALE: N.T.S.

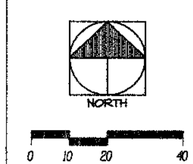

Two working days before you dig CALL FOR THE BLUE STAKES 1-800-782-5348 Blue Stake Center CALL COLLECT

No.	Revision Description	Date

Engineer	Date

		Date
Designed	DDS	07/09
Drawn	PB	07/09
Checked	DKM	07/09
Proj. L.A.	DDS	07/09

REGISTERED LANDSCAPE ARCHITECT CERTIFICATE NO. 48751 DARLENE D. SHOWALTER Date Signed 7/31/09 ARIZONA, U.S.A. Expires 12/31/2011

McGann & Associates
Landscape Architects and Planners
6816 North Oracle Rd. Suite 210
Tucson, Arizona 85704
Telephone: (520) 297-9540 Fax: (520) 297-9545

Pima County Department of Transportation

Priscilla S. Cornelio, P.E., Director

LA CHOLLA BLVD.
RUTHRAUFF RD. TO RIVER RD.
LANDSCAPE PLAN
AREA 10

Scales	1" = 20'	Sheet L10 of L35	Page 212 of 356

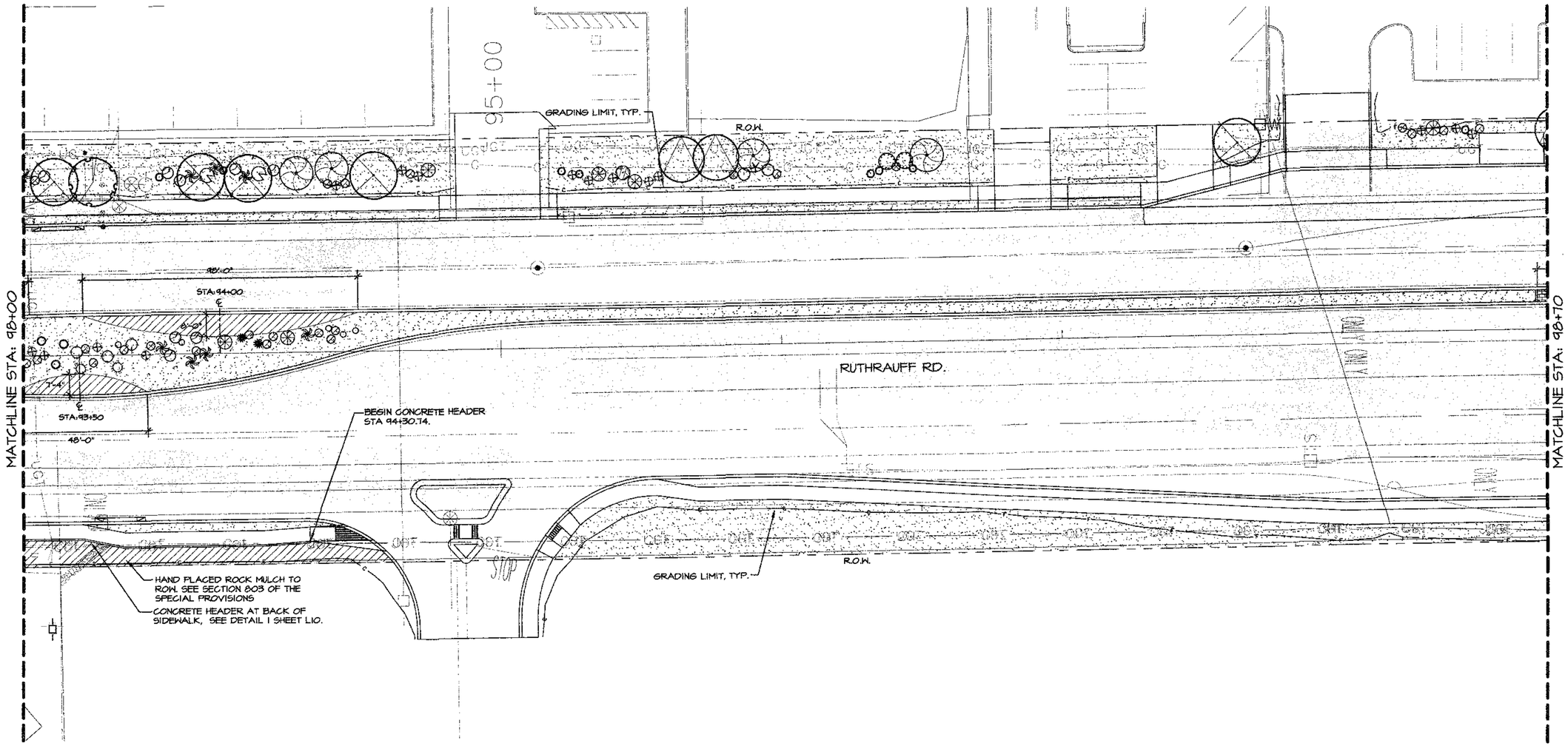

HATCH LEGEND

- SIGHT VISIBILITY TRAINGLE
- DECOMPOSED GRANITE SURFACING
- ROCK MULCH NATIVE STONE RIP-RAP
- INTEGRALLY COLORED CONCRETE PAVING

NOTE:

1. TREES TO BE PLANTED A MINIMUM DISTANCE OF 10 FEET AWAY FROM SEWER LINES AND OVERHEAD POWER LINES.
2. TREES TO BE PLANTED A MINIMUM OF 8 FEET FROM SIDEWALK AND 6 FEET FROM CURB. SHRUBS TO BE PLANTED A MINIMUM OF 4 FEET FROM SIDEWALK OR CURBS.
3. ANY LANDSCAPING LOCATED WITHIN TEN (10) FEET HORIZONTAL, OF ANY PUBLIC SANITARY SEWER MAINS AND WITH THE PLANTING GUIDELINES CONTAINED WITHIN THE CITY OF TUCSON/PIMA COUNTY STANDARD DETAIL WWM A-4.
4. SEE LANDSCAPE DEMOLITION, RELOCATION ADN PRESERVATION PLANS FOR WORK RELATED TO EXISTING PRIVATE AND PUBLIC LANDSCAPE AND IRRIGATION WITH THE PROJECT AREA.
5. SEE SHEET L16 FOR LANDSCAPE SCHEDULE AND DETAILS.

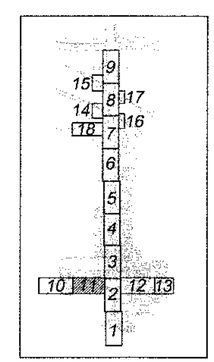

AREA KEY MAP

SCALE: N.T.S.

NORTH

0 10 20 40

Two working days before you dig.
CALL FOR THE BLUE STAKES
1-800-782-5348
Blue Stake Center
CALL COLLECT

Priscilla S. Cornelio, P.E., Director

Designed	DDS	07/09
Drawn	PB	07/09
Checked	DKM	07/09
Proj. L.A.	DDS	07/09

No.	Revision Description	Engineer	Date

REGISTERED LANDSCAPE ARCHITECT
CERTIFICATE NO. 48751
DARLENE D. SHOWALTER
Date Signed 6-29-09
ARIZONA, U.S.A.
Expires 12/31/2011

McGann & Associates
Landscape Architects and Planners
6814 North Oracle Rd. Suite 210
Tucson, Arizona 85704
Telephone (520) 297-9540 Fax (520) 297-3645

Pima County Department of Transportation

LA CHOLLA BLVD.
RUTHRAUFF RD. TO RIVER RD.
LANDSCAPE PLAN
AREA 11

Scales	1" = 20'	Sheet L11 of L35	Page 213 of 356

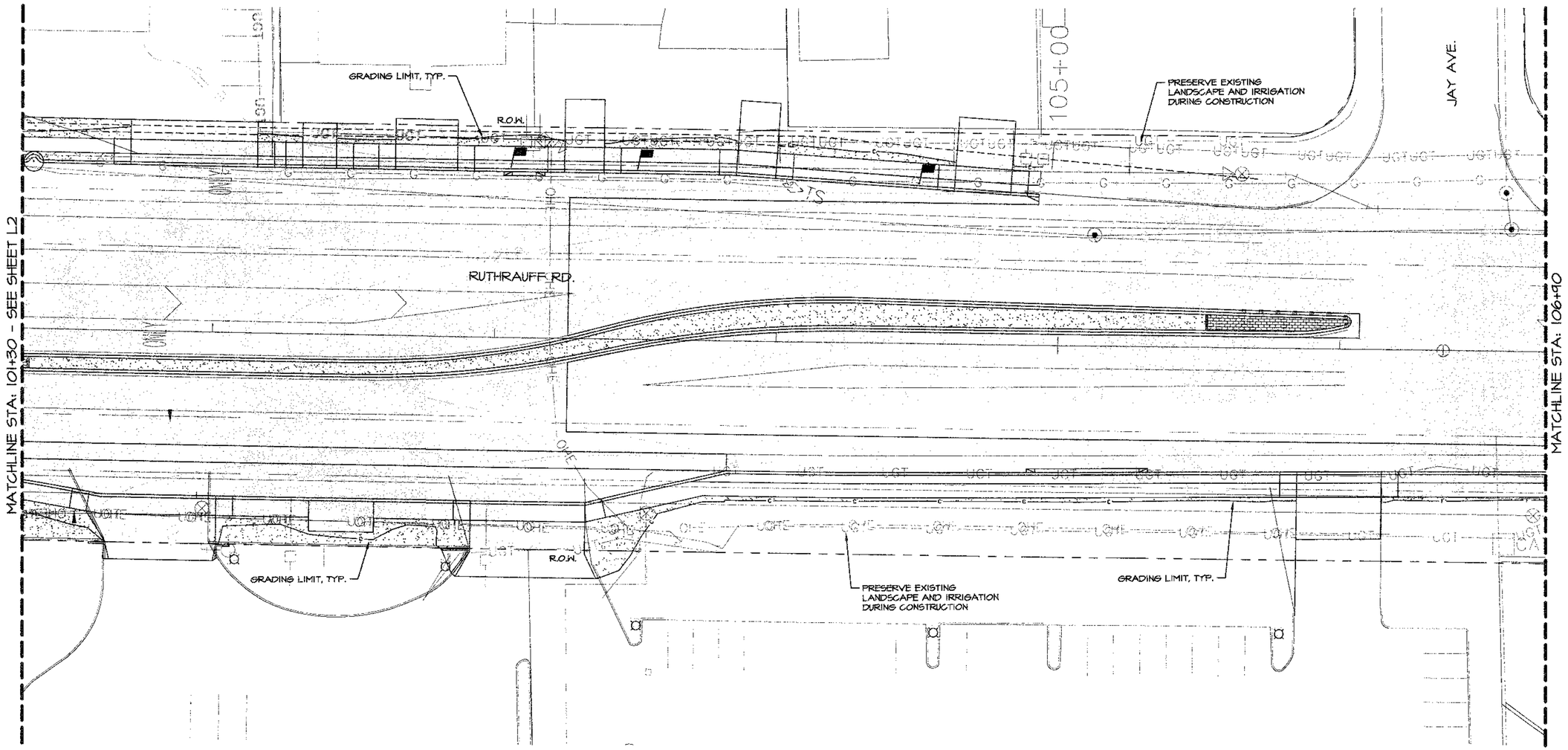

HATCH LEGEND

- SIGHT VISIBILITY TRAINGLE
- DECOMPOSED GRANITE SURFACING
- ROCK MULCH NATIVE STONE RIP-RAP
- INTEGRALLY COLORED CONCRETE PAVING

NOTE:

1. TREES TO BE PLANTED A MINIMUM DISTANCE OF 10 FEET AWAY FROM SEWER LINES AND OVERHEAD POWER LINES.
2. TREES TO BE PLANTED A MINIMUM OF 8 FEET FROM SIDEWALK AND 6 FEET FROM CURB. SHRUBS TO BE PLANTED A MINIMUM OF 4 FEET FROM SIDEWALK OR CURBS.
3. ANY LANDSCAPING LOCATED WITHIN TEN (10) FEET HORIZONTAL, OF ANY PUBLIC SANITARY SEWER MAINS AND WITH THE PLANTING GUIDELINES CONTAINED WITHIN THE CITY OF TUCSON/PIMA COUNTY STANDARD DETAIL WAM A-4.
4. SEE LANDSCAPE DEMOLITION, RELOCATION ADN PRESERVATION PLANS FOR WORK RELATED TO EXISTING PRIVATE AND PUBLIC LANDSCAPE AND IRRIGATION WITH THE PROJECT AREA.
5. SEE SHEET L16 FOR LANDSCAPE SCHEDULE AND DETAILS.

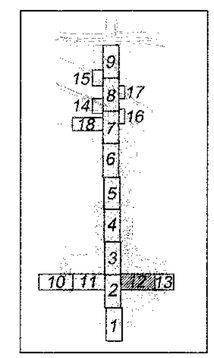

AREA KEY MAP

SCALE: N.T.S.

NORTH

0 10 20 40

Two working days before you dig CALL FOR THE BLUE STAKES 1-800-782-5348 Blue Stake Center CALL COLLECT

No.	Revision Description	Engineer	Date

		Date
Designed	DDS	07/09
Drawn	PB	07/09
Checked	DKM	07/09
Proj. L.A.	DDS	07/09

REGISTERED LANDSCAPE ARCHITECT CERTIFICATE NO. 48751 DARLENE D. SHOWALTER Date Signed ARIZONA, U.S.A. Expires 12/31/2011

McGann & Associates
Landscape Architects and Planners
6814 North Oracle Rd., Suite 210
Tucson, Arizona 85704
Telephone: (520) 297-9540 Fax: (520) 297-9545

Pima County Department of Transportation

Priscilla S. Cornelio, P.E., Director

LA CHOLLA BLVD.
RUTHRAUFF RD. TO RIVER RD.
LANDSCAPE PLAN
AREA 1.2

Scales	1" = 20'	Sheet L12 of L35	Page 214 of 356

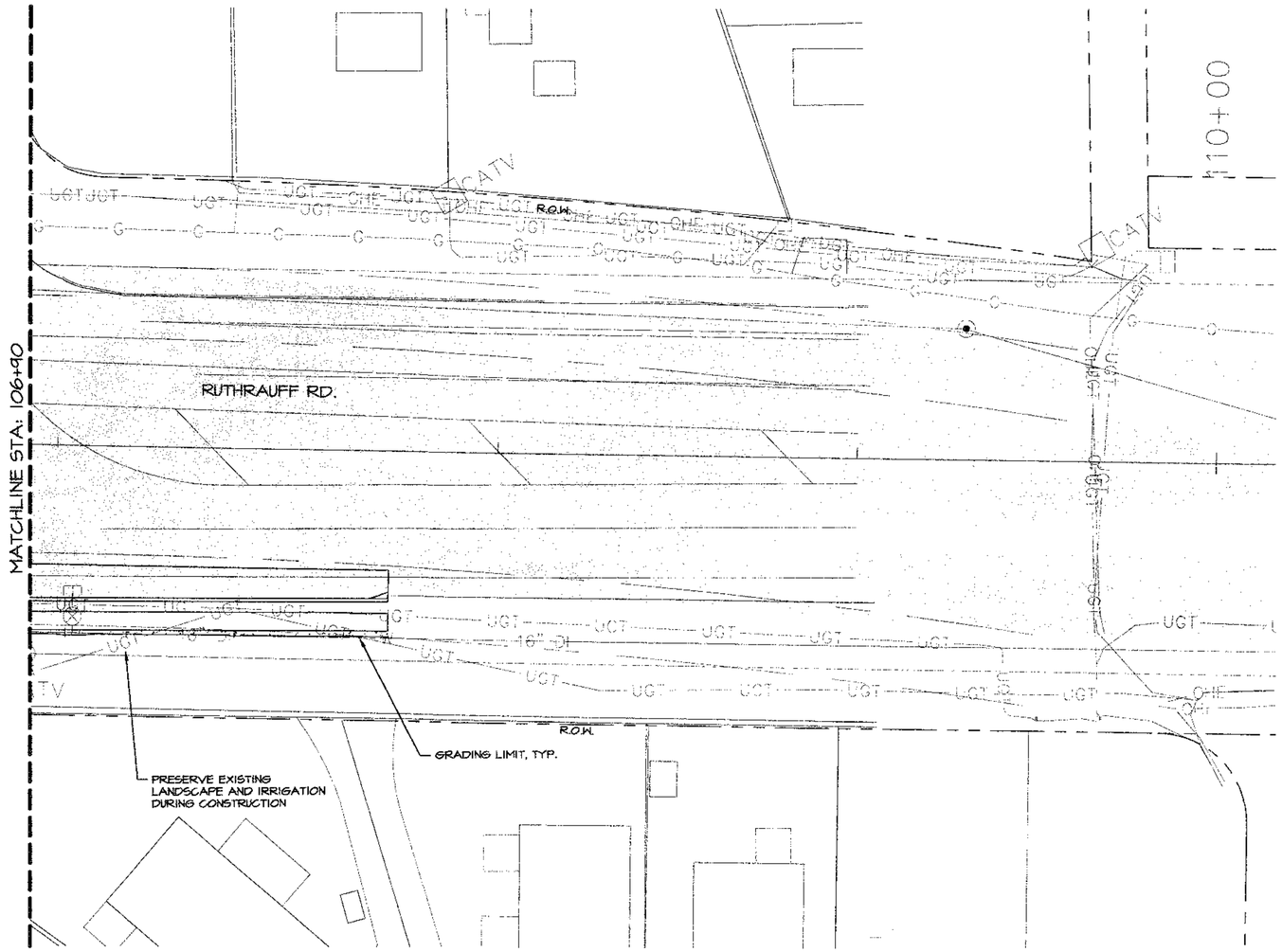

HATCH LEGEND

- SIGHT VISIBILITY TRAINGLE
- DECOMPOSED GRANITE SURFACING
- ROCK MULCH NATIVE STONE RIP-RAP
- INTEGRALLY COLORED CONCRETE PAVING

NOTE:

1. TREES TO BE PLANTED A MINIMUM DISTANCE OF 10 FEET AWAY FROM SEWER LINES AND OVERHEAD POWER LINES.
2. TREES TO BE PLANTED A MINIMUM OF 8 FEET FROM SIDEWALK AND 6 FEET FROM CURB. SHRUBS TO BE PLANTED A MINIMUM OF 4 FEET FROM SIDEWALK OR CURBS.
3. ANY LANDSCAPING LOCATED WITHIN TEN (10) FEET HORIZONTAL, OF ANY PUBLIC SANITARY SEWER MAINS AND WITH THE PLANTING GUIDELINES CONTAINED WITHIN THE CITY OF TUCSON/PIMA COUNTY STANDARD DETAIL WWM A-4.
4. SEE LANDSCAPE DEMOLITION, RELOCATION ADN PRESERVATION PLANS FOR WORK RELATED TO EXISTING PRIVATE AND PUBLIC LANDSCAPE AND IRRIGATION WITH THE PROJECT AREA.
5. SEE SHEET L16 FOR LANDSCAPE SCHEDULE AND DETAILS.

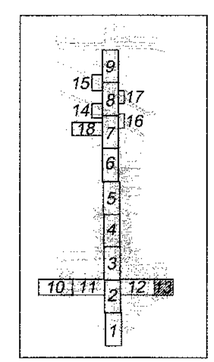

AREA KEY MAP

SCALE: N.T.S.

NORTH

0 10 20 40

Two working days before you dig CALL FOR THE BLUE STAKES 1-800-782-5348 Blue Stake Center CALL COLLECT

Priscilla S. Cornelio, P.E., Director

Pima County Department of Transportation

No.	Revision Description	Engineer	Date

		Date
Designed	DDS	07/09
Drawn	PB	07/09
Checked	DKM	07/09
Proj. L.A.	DDS	07/09

REGISTERED LANDSCAPE ARCHITECT CERTIFICATE NO. 48751 DARLENE D. SHOWALTER Date Signed ARIZONA, U.S.A.

Expires 12/31/2011

McGann & Associates
Landscape Architects and Planners
6814 North Oracle Rd., Suite 210
Tucson, Arizona 85704
Telephone: (520) 297-9540 Fax: (520) 297-9545

LA CHOLLA BLVD.
RUTHRAUFF RD. TO RIVER RD.

LANDSCAPE PLAN
AREA 1.3

Scales	1" = 20'	Sheet L13 of L35	Page 215 of 356

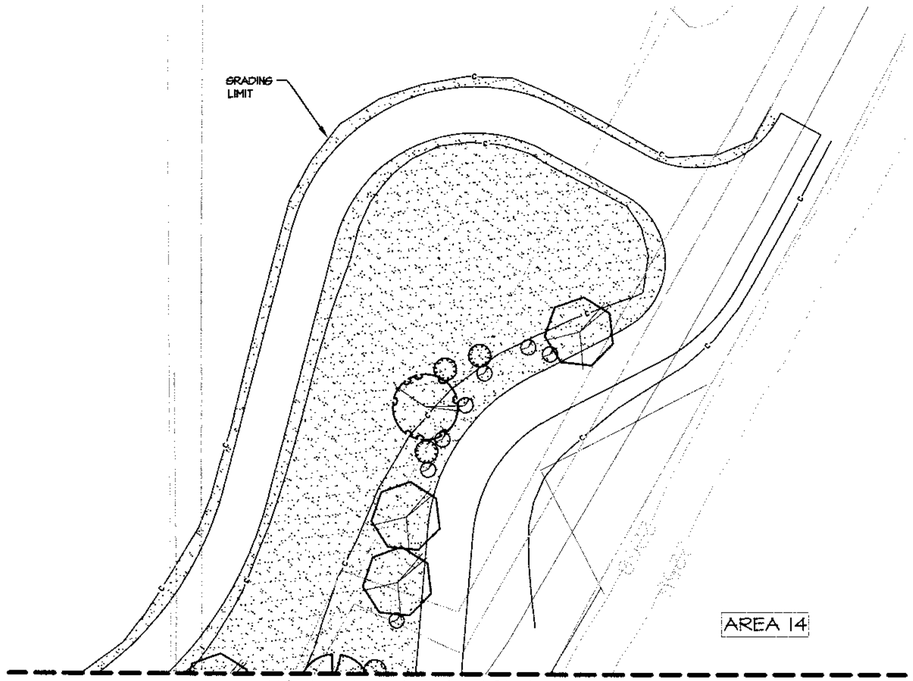

MATCHLINE - SEE SHEET L8

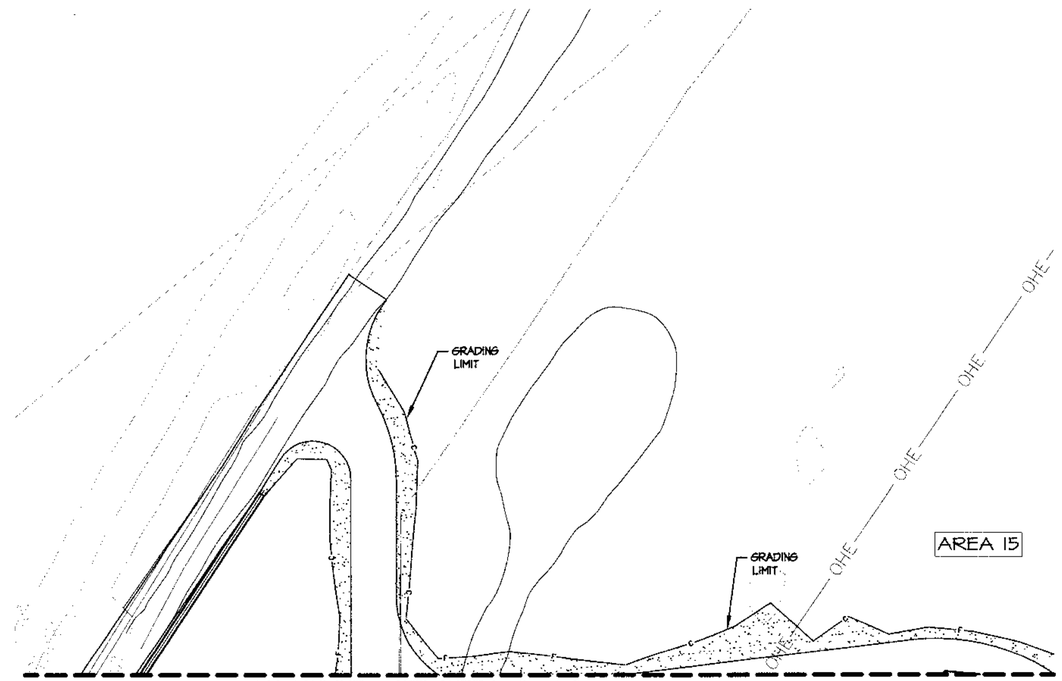

MATCHLINE - SEE SHEET L8 - L9

MATCHLINE - SEE SHEET L7 - L8

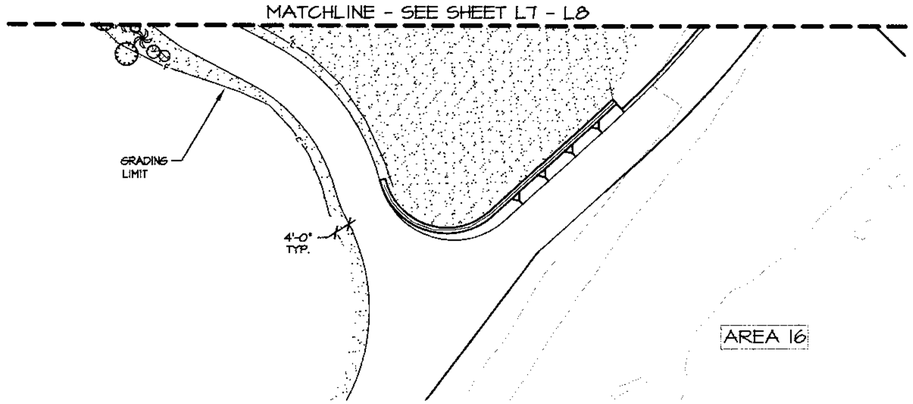

MATCHLINE - SEE SHEET L8

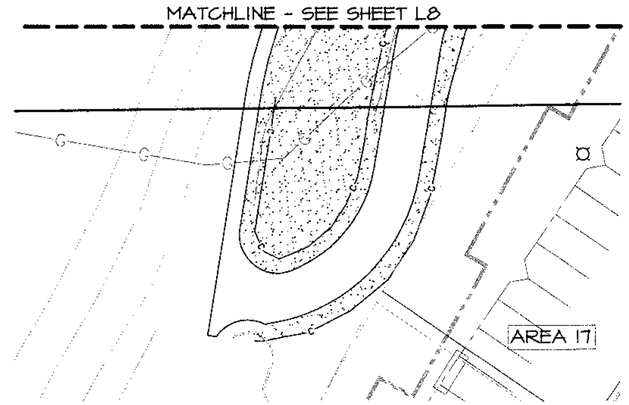

HATCH LEGEND

- SIGHT VISIBILITY TRAINGLE
- DECOMPOSED GRANITE SURFACING
- ROCK MULCH NATIVE STONE RIP-RAP
- INTEGRALLY COLORED CONCRETE PAVING

NOTE:

1. TREES TO BE PLANTED A MINIMUM DISTANCE OF 10 FEET AWAY FROM SEWER LINES AND OVERHEAD POWER LINES.
2. TREES TO BE PLANTED A MINIMUM OF 8 FEET FROM SIDEWALK AND 6 FEET FROM CURB, SHRUBS TO BE PLANTED A MINIMUM OF 4 FEET FROM SIDEWALK OR CURBS.
3. ANY LANDSCAPING LOCATED WITHIN TEN (10) FEET HORIZONTAL, OF ANY PUBLIC SANITARY SEWER MAINS AND WITH THE PLANTING GUIDELINES CONTAINED WITHIN THE CITY OF TUCSON/PIMA COUNTY STANDARD DETAIL WWM A-4.
4. SEE LANDSCAPE DEMOLITION, RELOCATION ADN PRESERVATION PLANS FOR WORK RELATED TO EXISTING PRIVATE AND PUBLIC LANDSCAPE AND IRRIGATION WITH THE PROJECT AREA.
5. SEE SHEET L16 FOR LANDSCAPE SCHEDULE AND DETAILS.

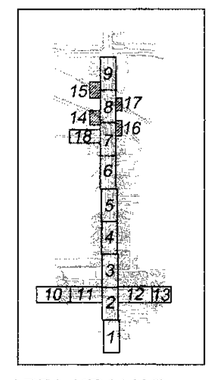

AREA KEY MAP

SCALE: N.T.S.

NORTH

0 10 20 40

Two working days before you dig CALL FOR THE BLUE STAKES 1-800-782-5348 Blue Stake Center CALL COLLECT

Priscilla S. Cornelio, P.E., Director

No.	Revision Description	Engineer	Date

		Date
Designed	DDS	07/09
Drawn	PB	07/09
Checked	DKM	07/09
Proj. L.A.	DDS	07/09

REGISTERED LANDSCAPE ARCHITECT 48751 DARLENE D. SHOWALTER ARIZONA, U.S.A. Expires 12/31/2011

McGann & Associates
Landscape Architects and Planners
8814 North Oracle Rd. Suite 210
Tucson, Arizona 85704
Telephone: (520) 297-9540 Fax: (520) 297-9549

Pima County Department of Transportation

LA CHOLLA BLVD.
RUTHRAUFF RD. TO RIVER RD.

LANDSCAPE PLAN
AREAS 14, 15, 16 & 17

Scales	1" = 20'	Sheet L14 of L35	Page 216 of 356

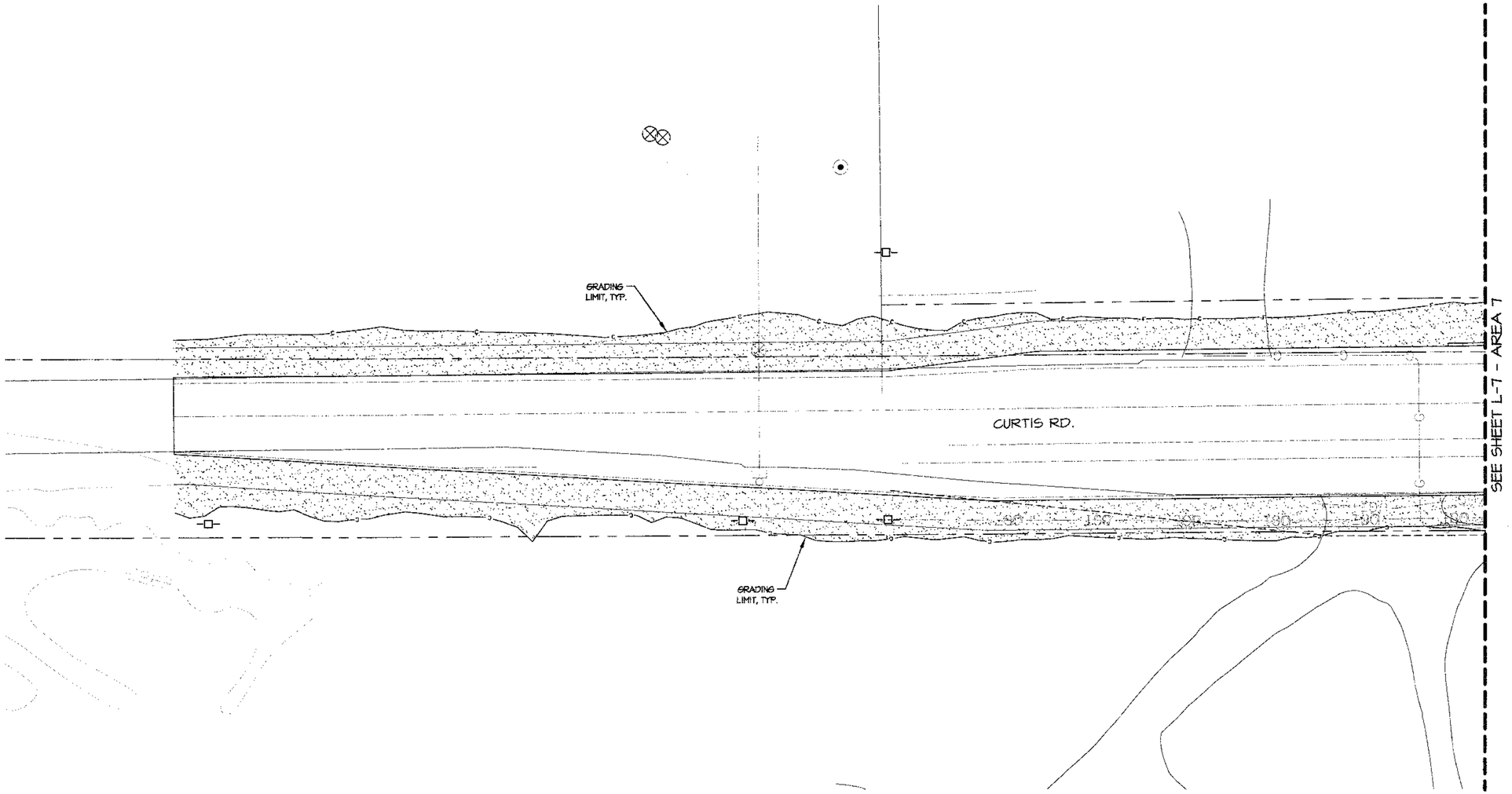

HATCH LEGEND

- SIGHT VISIBILITY TRAINGLE
- DECOMPOSED GRANITE SURFACING
- ROCK MULCH NATIVE STONE RIP-RAP
- INTEGRALLY COLORED CONCRETE PAVING

NOTE:

1. TREES TO BE PLANTED A MINIMUM DISTANCE OF 10 FEET AWAY FROM SEWER LINES AND OVERHEAD POWER LINES.
2. TREES TO BE PLANTED A MINIMUM OF 8 FEET FROM SIDEWALK AND 6 FEET FROM CURB. SHRUBS TO BE PLANTED A MINIMUM OF 4 FEET FROM SIDEWALK OR CURBS.
3. ANY LANDSCAPING LOCATED WITHIN TEN (10) FEET HORIZONTAL, OF ANY PUBLIC SANITARY SEWER MAINS AND WITH THE PLANTING GUIDELINES CONTAINED WITHIN THE CITY OF TUCSON/PIMA COUNTY STANDARD DETAIL WWM A-4.
4. SEE LANDSCAPE DEMOLITION, RELOCATION ADN PRESERVATION PLANS FOR WORK RELATED TO EXISTING PRIVATE AND PUBLIC LANDSCAPE AND IRRIGATION WITH THE PROJECT AREA.
5. SEE SHEET L16 FOR LANDSCAPE SCHEDULE AND DETAILS.

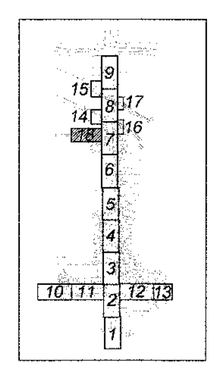

AREA KEY MAP

SCALE: N.T.S.

NORTH

0 10 20 40

Two working days before you dig CALL FOR THE BLUE STAKES 1-800-782-5348 Blue Stake Center CALL COLLECT

Priscilla S. Cornelio, P.E., Director

Pima County Department of Transportation

No.	Revision Description	Engineer	Date

		Date
Designed	DDS	07/09
Drawn	PB	07/09
Checked	DKM	07/09
Proj. L.A.	DDS	07/09

REGISTERED LANDSCAPE ARCHITECT CERTIFICATE NO. 48751 DARLENE D. SHOWALTER Date Signed ARIZONA, U.S.A.

Expires 12/31/2011

McGann & Associates
Landscape Architects and Planners
6814 North Oracle Rd., Suite 210
Tucson, Arizona 85704
Telephone: (520) 297-9540 Fax: (520) 297-9546

LA CHOLLA BLVD.
RUTHRAUFF RD. TO RIVER RD.
LANDSCAPE PLAN
AREA 18

Scales	1" = 20'	Sheet L15 of L35	Page 217 of 356

NOTE: TREES TO BE STAKED WILL BE MARKED BY ENGINEER.

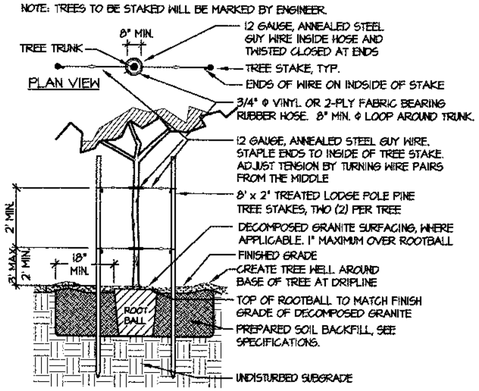

1 TREE PLANTING - NURSERY STOCK 24" BOX & 15 GAL. SIZE

SCALE: N.T.S. L-101

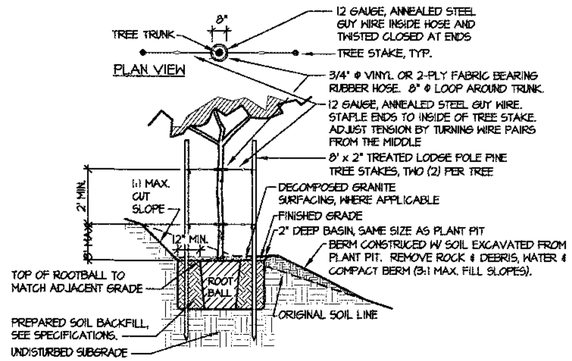

2 TREE PLANTING ON SLOPE

SCALE: N.T.S. PL-4.1

NOTES:
1. DO NOT CREATE BASIN AT BASE OF CACTUS. SLOPE BACKFILL AWAY FROM PLANT.
2. SET CACTUS SO THAT TOP OF ROOT BALL MATCHES ADJACENT GRADE.
3. THIS DETAIL APPLIES TO NURSERY GROWN STOCK OF THE GENUS OPUNTIA.

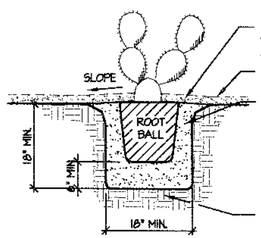

3 PLANTING - NURSERY STOCK: PRICKLY PEAR & CHOLLA CACTUS (CONTAINER GROWN)

SCALE: N.T.S. L-105

NOTES:
1. DO NOT CREATE A BASIN AT BASE OF CACTUS. SLOPE BACKFILL AWAY FROM STEM.
2. SET CACTUS SO THAT TOP OF ROOT BALL MATCHES ADJACENT GRADE.
3. THIS DETAIL APPLIES TO NURSERY GROWN STOCK OF THE GENERA CARNEGIEA, CEREUS, FERROCACTUS AND STENOCEREUS.

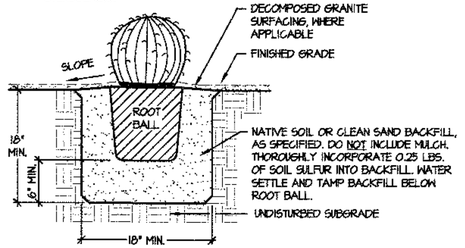

4 PLANTING - NURSERY STOCK: BARREL AND COLUMNAR CACTUS - CONTAINER GROWN

SCALE: N.T.S. L-115

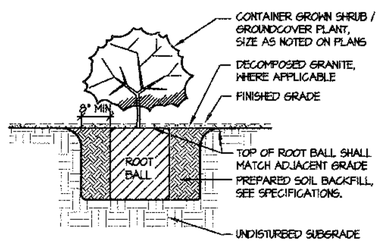

5 PLANTING - NURSERY STOCK: SHRUB/ GROUNDCOVER - 1, 5 & 15 GAL. SIZE

SCALE: N.T.S. L-104

LANDSCAPE SCHEDULE

SYMBOL	BOTANICAL NAME	COMMON NAME	SIZE	QUANTITY	# EMITTER OUTLETS/ FLOW RATE	NOTES
TREES						
	CHILOPSIS LINEARIS (purple flowered selections)	DESERT WILLOW*	15 GAL	32	6 / 1-GPH	SEE DETAILS
	CHILOPSIS LINEARIS 'LOIS ADAMS'	DESERT WILLOW*	15 GAL	31	6 / 1-GPH	"
	EYSENHARDTIA ORTHOCARPA	KIDNEYWOOD*	5 GAL	20	6 / 1-GPH	"
	SOPHORA SECUNDIFLORA	TEXAS MOUNTAIN LAUREL	15 GAL	46	6 / 1-GPH	"
	PARKINSONIA DESERT MUSEUM HYBRID™		24" BOX	15	6 / 1-GPH	"
	PARKINSONIA FLORIDA	BLUE PALO VERDE*	15 GAL	25	6 / 1-GPH	"
	PROSOPIS VELUTINA	VELVET MESQUITE*	15 GAL	17	6 / 1-GPH	"
	PITHECELLOBIUM MEXICANUM	MEXICAN EBONY	24" BOX	6	6 / 1-GPH	"
LARGE SHRUBS						
	LARREA TRIDENTATA	CREOSOTE*	5 GAL.	19	1 / 1-GPH	SEE DETAILS
	SIMMONDSIA CHINENSIS	JOJOBA*	5 GAL.	40	1 / 1-GPH	"
	TECOMA STANS V. ANGUSTATA	YELLOW BELLS*	5 GAL.	27	1 / 1-GPH	"
SMALL SHRUBS						
	AMBROSIA DELTOIDEA	TRIANGLE-LEAF BURSAGE*	1 GAL.	16	1 / 1-GPH	SEE DETAILS
	ASCLEPIAS SUBULATA	DESERT MILKWEED*	1 GAL.	30	1 / 1-GPH	"
	ASCLEPIAS LINARIA	PINELEAF MILKWEED*	1 GAL.	35	1 / 1-GPH	"
	CALLIANDRA ERIOPHYLLA	FAIRY DUSTER*	1 GAL.	103	1 / 1-GPH	"
	DALEA PULCHRA	BUSH DALEA*	1 GAL.	56	1 / 1-GPH	"
	ENCILIA FARINOSA	BRITTLEBUSH*	1 GAL.	88	1 / 1-GPH	"
	JUSTICIA CALIFORNICA	CHUPAROSA*	1 GAL.	15	1 / 1-GPH	"
	SPHAERALCEA AMBIGUA	DESERT GLOBEMALLOW*	1 GAL.	98	1 / 1-GPH	"
CACTI AND ACCENT PLANTS						
	CARNEGIEA GIGANTEA	SAGUARO*	4' - 8'	18	1 / 0.5-GPH	SEE DETAILS
	ECHINOCEREUS	HEDGEHOG CACTUS*	5 GAL.	40	1 / 0.5-GPH	"
	AGAVE CHRYSANTHA	GOLDEN-FLOWERED AGAVE*	5 GAL.	14	1 / 0.5-GPH	"
	DASYLIRION WHEELERI	DESERT SPOON*	5 GAL.	39	1 / 0.5-GPH	"
	FEROCACTUS WISLIZENII	FISHHOOK BARREL*	5 GAL.	34	1 / 0.5-GPH	"
	HESPERALOE FUNIFERA	GIANT YUCCA*	5 GAL.	66	1 / 0.5-GPH	"
	HESPERALOE PARVIFLORA	RED YUCCA*	5 GAL.	108	1 / 0.5-GPH	"
	OPUNTIA BASILARIS	BEAVERTAIL PRICKLY PEAR*	5 GAL.	9	1 / 0.5-GPH	"
	OPUNTIA SANTA RITA	PURPLE PRICKLY PEAR*	5 GAL.	19	1 / 0.5-GPH	"
	YUCCA BACCATA	BANANA YUCCA*	5 GAL.	42	1 / 0.5-GPH	"

INORGANIC SURFACING

- DECOMPOSED GRANITE SURFACING, SEE SPECIAL PROVISIONS
- ROCK MULCH SEE SPECIAL PROVISIONS
- INTEGRALLY COLORED CONCRETE, SEE SPECIAL PROVISIONS

* CONTRACTOR PROVIDED PLANTS

NOTES:
1. SET MAIN STEM OF CACTUS PLUMB AS VIEWED FROM ALL SIDES.
2. DO NOT CREATE A BASIN AT BASE OF CACTUS. SLOPE BACKFILL AWAY FROM STEM.
3. PLANT SAGUARO WITH SAME ORIENTATION AS IN ORIGINAL LOCATION. MARK NORTH SIDE OF SAGUARO WITH TAG PRIOR TO START OF SALVAGE WORK.
4. PLACE SAGUARO SO NO GREEN PORTION IS IN DIRECT CONTACT WITH SOIL.

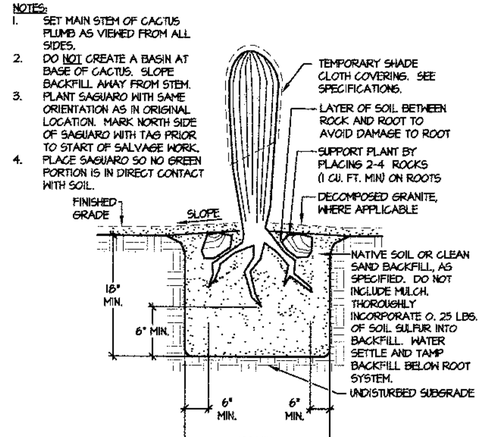

6 SAGUARO TRANSPLANT

SCALE: N.T.S. PL-5.1

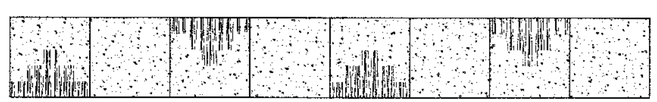

PATTERN REPEAT PLAN

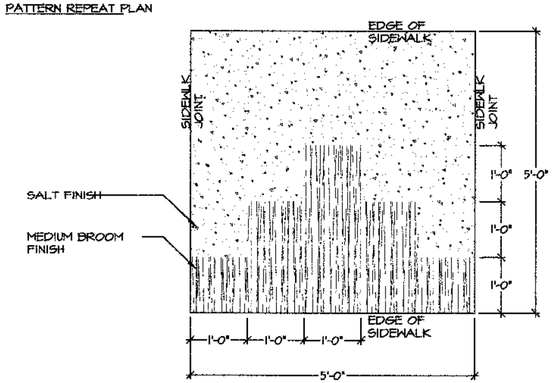

7 CONCRETE SIDEWALK FINISH PATTERNING

SCALE: N.T.S.

SIDEWALK FINISH PATTERNING		
STATIONING (LEFT)	DISTANCE	NUMBER OF PATTERNED PANELS
51+10 TO 51+50	40'	4 PANELS
52+60 TO 53+40	80'	8 PANELS
54+80 TO 55+20	40'	4 PANELS
56+55 TO 57+35	80'	8 PANELS
57+85 TO 63+45	560'	56 PANELS
64+25 TO 65+45	120'	12 PANELS
67+80 TO 70+20	240'	24 PANELS
72+80 TO 74+00	120'	12 PANELS
74+65 TO 75+05	40'	4 PANELS

SIDEWALK FINISH PATTERNING		
STATIONING (RIGHT)	DISTANCE	NUMBER OF PATTERNED PANELS
51+00 TO 51+40	40'	4 PANELS
54+00 TO 59+60	560'	56 PANELS
61+90 TO 62+30	40'	4 PANELS
63+60 TO 64+40	80'	8 PANELS
66+60 TO 67+40	80'	8 PANELS
69+60 TO 70+40	80'	8 PANELS
73+25 TO 73+65	40'	4 PANELS

Two working days before you dig. CALL FOR THE BLUE STAKES 1-800-782-5348 Blue Stake Center CALL COLLECT

No.	Revision Description	Engineer	Date

		Date
Designed	DDS	07/09
Drawn	PB	07/09
Checked	DKM	07/09
Proj. L.A.	DDS	07/09

Priscilla S. Cornelio, P.E., Director

Pima County Department of Transportation

REGISTERED LANDSCAPE ARCHITECT CERTIFICATE NO. 48751 DARLENE D. SHOWALTER Date Signed 12/31/09 ARIZONA, U.S.A. Expires 12/31/2011

McGann & Associates
Landscape Architects and Planners
6914 North Oracle Rd., Suite 210
Tucson, Arizona 85704
Telephone: (520) 297-9540 Fax: (520) 297-9545

LA CHOLLA BLVD.
RUTHRAUFF RD. TO RIVER RD.
LANDSCAPE SCHEDULE PLAN AND DETAILS

Scales | 1" = 20' | Sheet L16 of L35 | Page 218 of 356

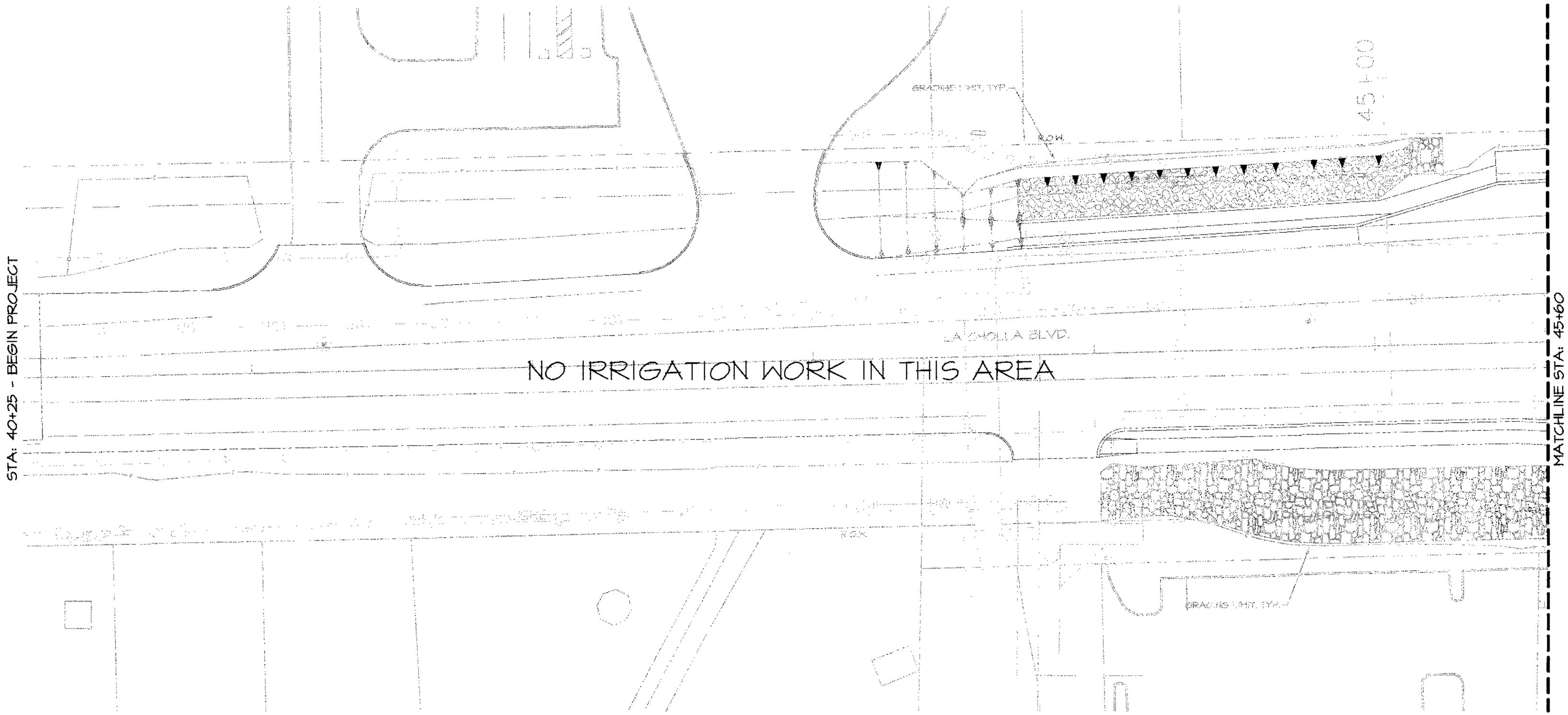

NOTE:
SEE SHEETS L32 AND L33 FOR IRRIGATION DETAILS AND SCHEDULE

NOTE:
IRRIGATION SYSTEM SHOWN SCHEMATICALLY FOR GRAPHIC CLARITY. CONTRACTOR SHALL LAY OUT IRRIGATION SYSTEM FOR APPROVAL BY PROJECT ENGINEER BEFORE TRENCHING.

NOTE:
ALL LATERAL LINE FLUSH END CAPS SHALL BE LOCATED SO THAT FLUSHING DOES NOT DISCHARGE DIRECTLY INTO WASHES OR DRAINAGES. LOCATIONS TO BE APPROVED BY ENGINEER.

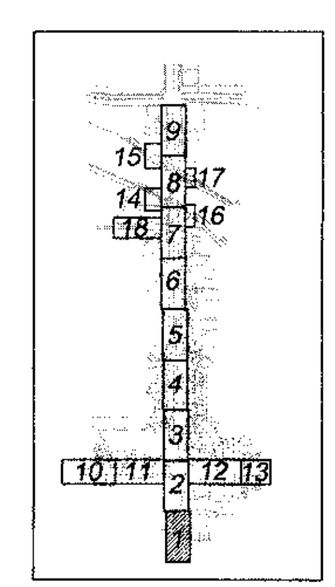

AREA KEY MAP
SCALE: N.T.S.

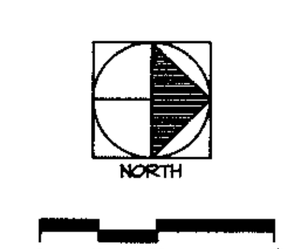

Two working days before you dig:
CALL FOR THE BLUE STAKES
1-800-782-5348
Blue Stake Center
CALL COLLECT

Pima County Department of Transportation

Priscilla S. Cornelio, P.E., Director

No.	Revision Description	Engineer	Date

		Date
Designed	DDS	07/09
Drawn	PB	07/09
Checked	DKM	07/09
Proj. L.A.	DDS	07/09

REGISTERED LANDSCAPE ARCHITECT
CERTIFICATE NO. 48751
DARLENE D. SHOWALTER
Date Signed 8-20-09
ARIZONA, U.S.A.
Expires 12/31/2011

McGann & Associates
Landscape Architects and Planners
6974 North Oracle Rd, Suite 210
Tucson, Arizona 85704
Telephone: (520) 297-9540 Fax: (520) 297-9545

LA CHOLLA BLVD.
RUTHRAUFF RD. TO RIVER RD.
IRRIGATION PLAN
AREA 1

Scales	1" = 20'	Sheet L17 of L35	Page 219 of 356

MATCHLINE STA: 98+70 - SEE SHEET L26

MATCHLINE STA: 45+60

MATCHLINE STA: 51+00

GRADING LIMIT, TYP.

LA CHOLLA BLVD.

1/2"

1/2"

ITS CONDUIT 3 FT. FROM BACK OF SIDEWALK, TYP. SEE STREET LIGHTING PLANS. IRRIGATION LINES SHALL BE SEPARATED A MINIMUM 2' FROM ITS CONDUIT. PLACE IRRIGATION LINES IN SLEEVES IF 2' OF SEPARATION CAN NOT BE ACHIEVED.

APPROXIMATE LOCATION OF EXISTING IRRIGATION LATERAL.

MATCHLINE STA: 101+30 - SEE SHEET L27

NOTE:
SEE SHEETS L32 AND L33 FOR IRRIGATION DETAILS AND SCHEDULE

NOTE:
IRRIGATION SYSTEM SHOWN SCHEMATICALLY FOR GRAPHIC CLARITY. CONTRACTOR SHALL LAY OUT IRRIGATION SYSTEM FOR APPROVAL BY PROJECT ENGINEER BEFORE TRENCHING.

NOTE:
ALL LATERAL LINE FLUSH END CAPS SHALL BE LOCATED SO THAT FLUSHING DOES NOT DISCHARGE DIRECTLY INTO WASHES OR DRAINAGES. LOCATIONS TO BE APPROVED BY ENGINEER.

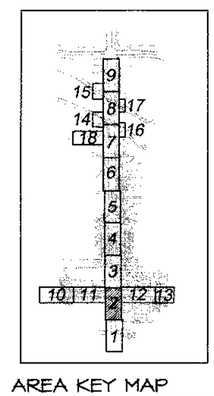

AREA KEY MAP
SCALE: N.T.S.

NORTH

0 10 20 40

Two working days before you dig
CALL FOR THE BLUE STAKES
1-800-782-5348
Blue Stake Center
CALL COLLECT

Designed	DDS	07/09
Drawn	PB	07/09
Checked	DKM	07/09
Proj. L.A.	DDS	07/09

No.	Revision Description	Engineer	Date

REGISTERED LANDSCAPE ARCHITECT
CERTIFICATE NO.
48751
DARLENE D. SHOWALTER
Date Signed 8-21-09
ARIZONA, U.S.A.
Expires 12/31/2011

McGann & Associates
Landscape Architects and Planners
6934 North Oracle Rd., Suite 210
Tucson, Arizona 85704
Telephone: (520) 297-9540 Fax: (520) 297-9545

Pima County Department of Transportation

Priscilla S. Cornelio, P.E., Director

LA CHOLLA BLVD.
RUTHRAUFF RD. TO RIVER RD.
IRRIGATION PLAN
AREA 2

Scales	1" = 20'	Sheet L18 of L35	Page 220 of 356

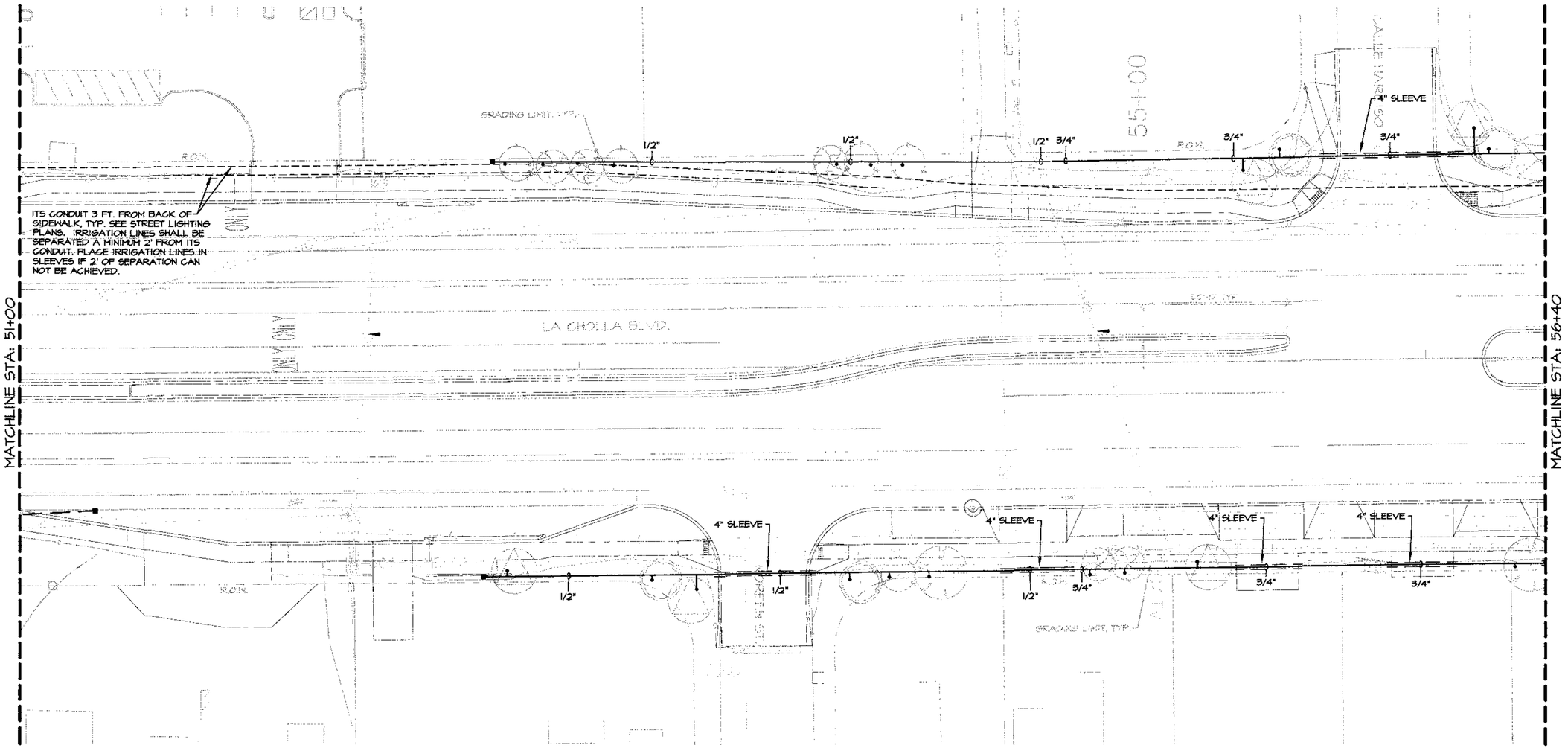

NOTE:
SEE SHEETS L32 AND L33 FOR IRRIGATION DETAILS AND SCHEDULE

NOTE:
IRRIGATION SYSTEM SHOWN SCHEMATICALLY FOR GRAPHIC CLARITY. CONTRACTOR SHALL LAY OUT IRRIGATION SYSTEM FOR APPROVAL BY PROJECT ENGINEER BEFORE TRENCHING.

NOTE:
ALL LATERAL LINE FLUSH END CAPS SHALL BE LOCATED SO THAT FLUSHING DOES NOT DISCHARGE DIRECTLY INTO WASHES OR DRAINAGES. LOCATIONS TO BE APPROVED BY ENGINEER.

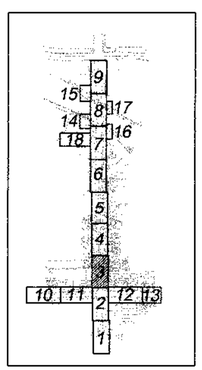

AREA KEY MAP
SCALE: N.T.S.

NORTH

0 10 20 40

Two working days before you dig
CALL FOR THE BLUE STAKES
1-800-782-5348
Blue Stake Center
CALL COLLECT

Pima County Department of Transportation

Priscilla S. Cornelio, P.E., Director

Designed	DDS	07/09
Drawn	PB	07/09
Checked	DKM	07/09
Proj. L.A.	DDS	07/09

No.	Revision Description	Engineer	Date

REGISTERED LANDSCAPE ARCHITECT
48751
DARLENE D. SHOWALTER
ARIZONA, U.S.A.
Expires 12/31/2011

McGann & Associates
Landscape Architects and Planners
6884 North Oracle Rd. Suite 210
Tucson, Arizona 85704
Telephone: (520) 297-9540 Fax: (520) 297-9546

LA CHOLLA BLVD.
RUTHRAUFF RD. TO RIVER RD.
IRRIGATION PLAN
AREA 3

Scales	1" = 20'	Sheet L19 of L35	Page 221 of 356

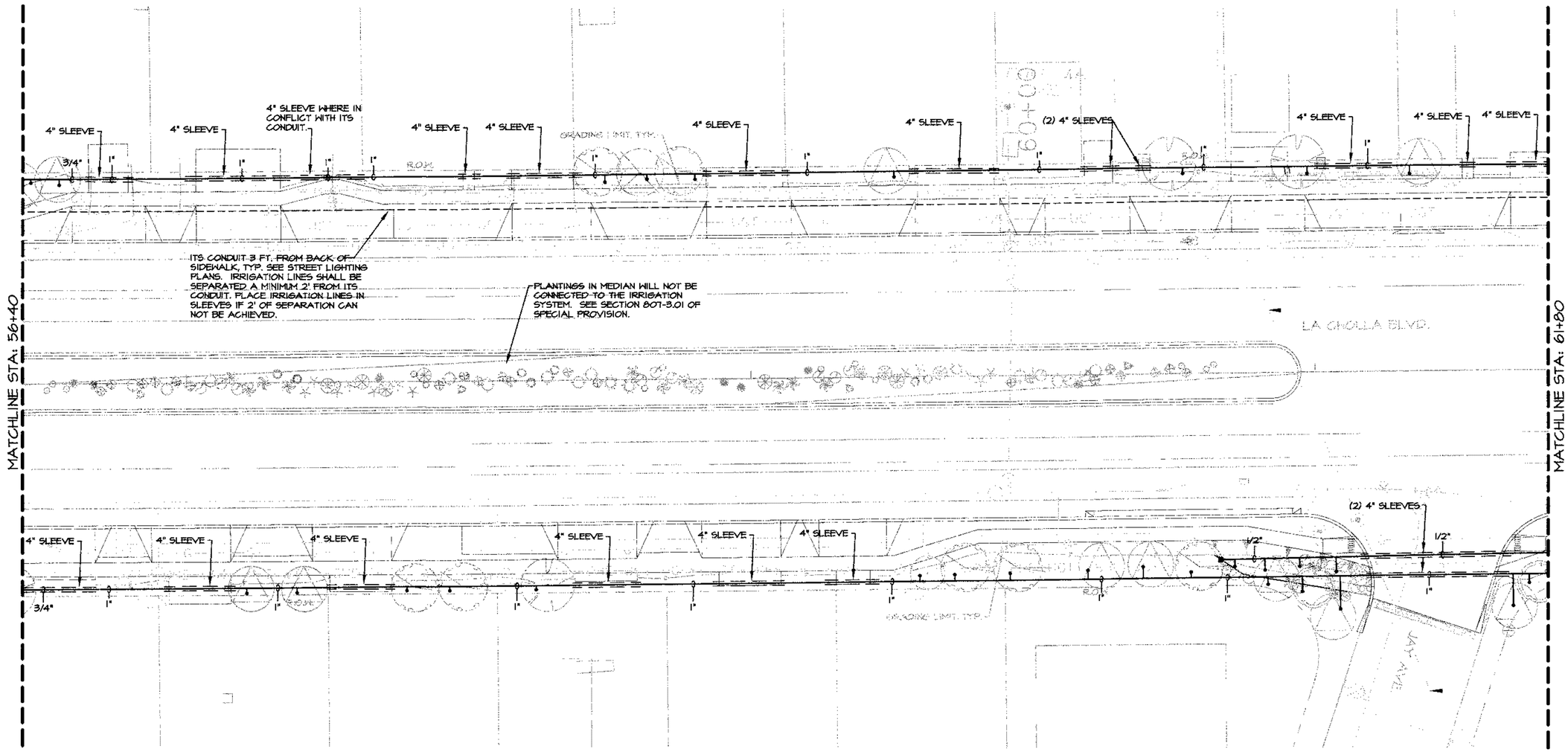

NOTE:
SEE SHEETS L32 AND L33 FOR IRRIGATION DETAILS AND SCHEDULE

NOTE:
IRRIGATION SYSTEM SHOWN SCHEMATICALLY FOR GRAPHIC CLARITY. CONTRACTOR SHALL LAY OUT IRRIGATION SYSTEM FOR APPROVAL BY PROJECT ENGINEER BEFORE TRENCHING.

NOTE:
ALL LATERAL LINE FLUSH END CAPS SHALL BE LOCATED SO THAT FLUSHING DOES NOT DISCHARGE DIRECTLY INTO WASHES OR DRAINAGES. LOCATIONS TO BE APPROVED BY ENGINEER.

AREA KEY MAP
SCALE: N.T.S.

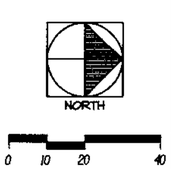

Two working days before you dig
CALL FOR THE BLUE STAKES
1-800-782-5348
Blue Stake Center
CALL COLLECT

Priscilla S. Cornelio, P.E., Director

Pima County Department of Transportation

Designed	DDS	07/09
Drawn	PB	07/09
Checked	DKM	07/09
Proj. L.A.	DDS	07/09

No.	Revision Description	Engineer	Date

REGISTERED LANDSCAPE ARCHITECT
CERTIFICATE NO. 48751
DABLENE D. SHOWALTER
Date Signed 8/21/09
ARIZONA, U.S.A.
Expires 12/31/2011

McGann & Associates
Landscape Architects and Planners
6814 North Oracle Rd. Suite 210
Tucson, Arizona 85704
Telephone: (520) 297-9540 Fax: (520) 297-3646

LA CHOLLA BLVD.
RUTHRAUFF RD. TO RIVER RD.
IRRIGATION PLAN
AREA 4

Scales	1" = 20'	Sheet L20 of L35	Page 222 of 356

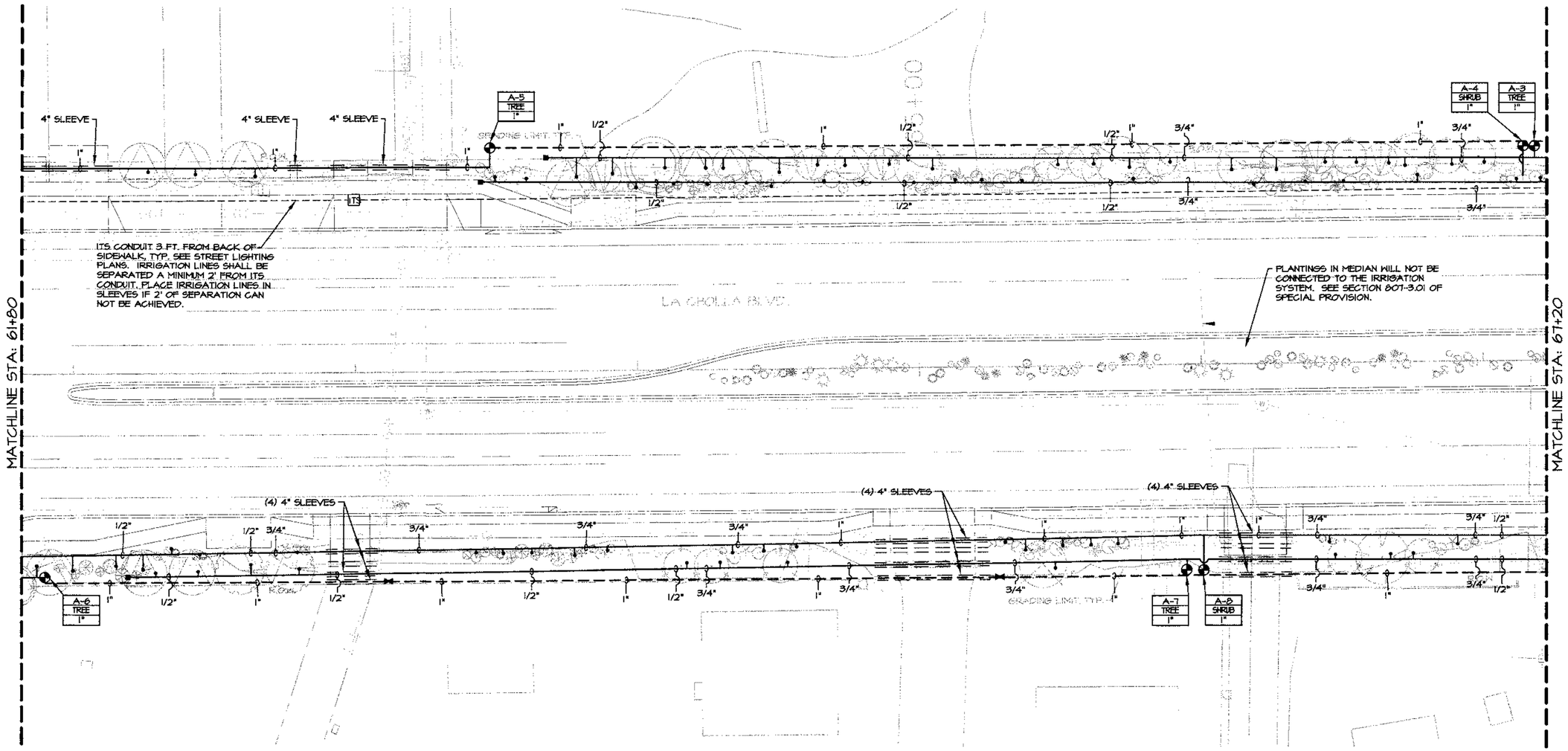

NOTE:
SEE SHEETS L32 AND L33 FOR IRRIGATION DETAILS AND SCHEDULE

NOTE:
IRRIGATION SYSTEM SHOWN SCHEMATICALLY FOR GRAPHIC CLARITY. CONTRACTOR SHALL LAY OUT IRRIGATION SYSTEM FOR APPROVAL BY PROJECT ENGINEER BEFORE TRENCHING.

NOTE:
ALL LATERAL LINE FLUSH END CAPS SHALL BE LOCATED SO THAT FLUSHING DOES NOT DISCHARGE DIRECTLY INTO WASHES OR DRAINAGES. LOCATIONS TO BE APPROVED BY ENGINEER.

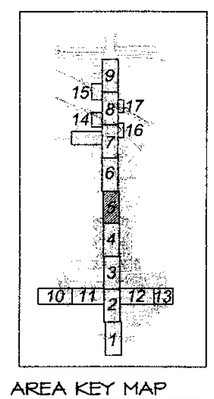

AREA KEY MAP
SCALE: N.T.S.

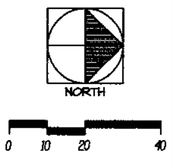

Two working days before you dig CALL FOR THE BLUE STAKES
1-800-782-5348
Blue Stake Center
CALL COLLECT

Designed	DDS	07/09
Drawn	PB	07/09
Checked	DKM	07/09
Proj. L.A.	DDS	07/09

No.	Revision Description	Engineer	Date

REGISTERED LANDSCAPE ARCHITECT
CERTIFICATE NO.
48751
DARLENE D. SHOWALTER
Date Signed 9-17-09
ARIZONA, U.S.A.
Expires 12/31/2011

McGann & Associates
Landscape Architects and Planners
8814 North Oracle Rd. Suite 210
Tucson, Arizona 85704
Telephone (520) 297-9540 Fax: (520) 297-9545

Pima County Department of Transportation
Priscilla S. Cornelio, P.E., Director

LA CHOLLA BLVD.
RUTHRAUFF RD. TO RIVER RD.
IRRIGATION PLAN
AREA 5

Scales	1" = 20'	Sheet L21 of L35	Page 223 of 356

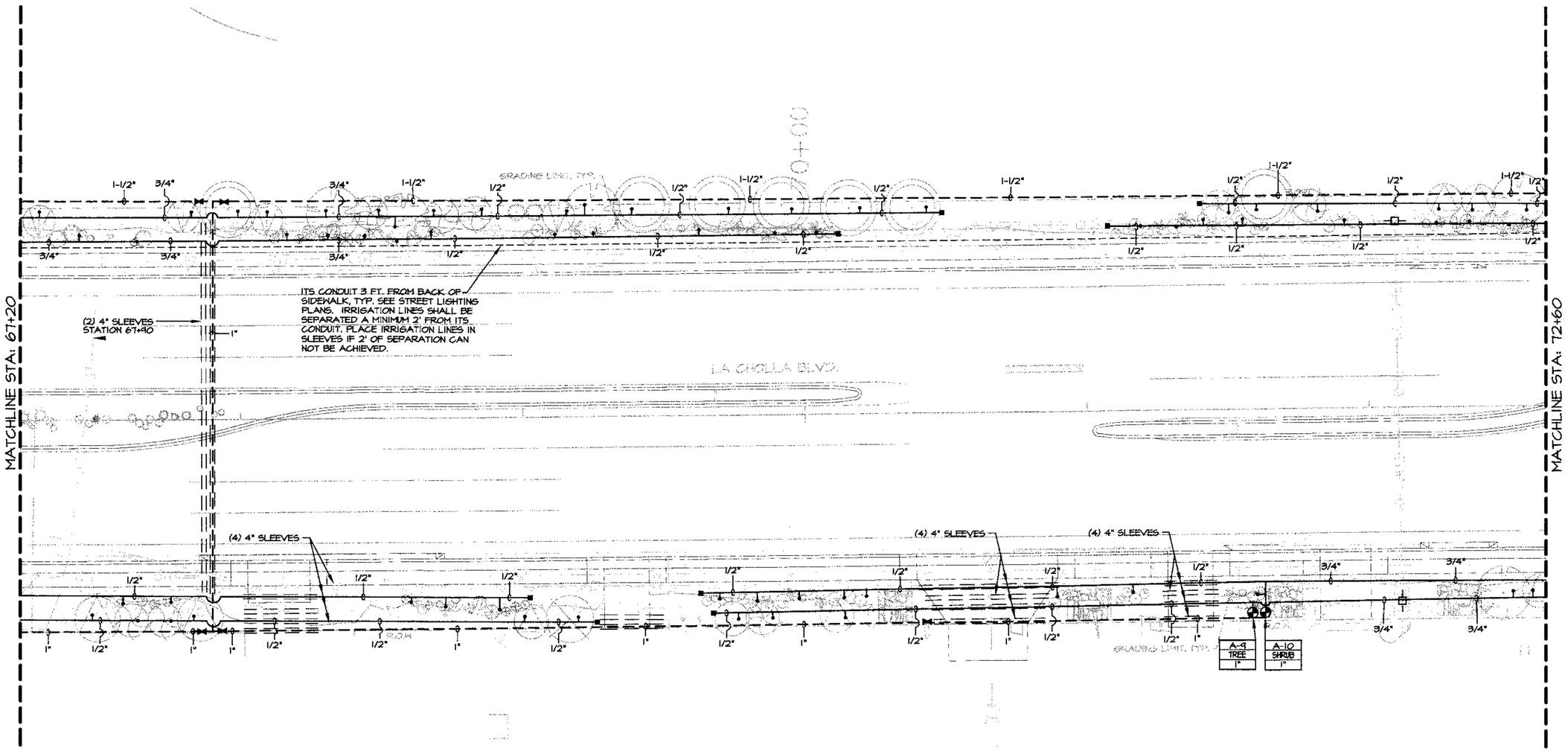

NOTE:
SEE SHEETS L32 AND L33 FOR IRRIGATION DETAILS AND SCHEDULE

NOTE:
IRRIGATION SYSTEM SHOWN SCHEMATICALLY FOR GRAPHIC CLARITY. CONTRACTOR SHALL LAY OUT IRRIGATION SYSTEM FOR APPROVAL BY PROJECT ENGINEER BEFORE TRENCHING.

NOTE:
ALL LATERAL LINE FLUSH END CAPS SHALL BE LOCATED SO THAT FLUSHING DOES NOT DISCHARGE DIRECTLY INTO WASHES OR DRAINAGES. LOCATIONS TO BE APPROVED BY ENGINEER.

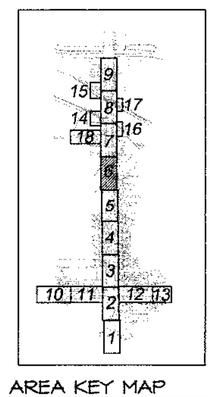

AREA KEY MAP
SCALE: N.T.S.

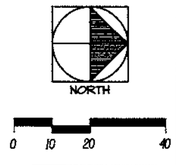

Two working days before you dig:
CALL FOR THE BLUE STAKES
1-800-782-5348
Blue Stake Center
CALL COLLECT

Priscilla S. Cornelio, P.E., Director

Pima County Department of Transportation

Designed	DDS	07/09
Drawn	PB	07/09
Checked	DKM	07/09
Proj. L.A.	DDS	07/09

No.	Revision Description	Engineer	Date

REGISTERED LANDSCAPE ARCHITECT
48751
DARLENE D. SHOWALTER
Date Signed 8-27-09
ARIZONA, U.S.A.
Expires 12/31/2011

McGann & Associates
Landscape Architects and Planners
6894 North Oracle Rd. Suite 210
Tucson, Arizona 85704
Telephone: (520) 297-9646 Fax: (520) 297-9646

LA CHOLLA BLVD.
RUTHRAUFF RD. TO RIVER RD.
IRRIGATION PLAN
AREA 6

Scales	1" = 20'	Sheet L22 of L35	Page 224 of 356

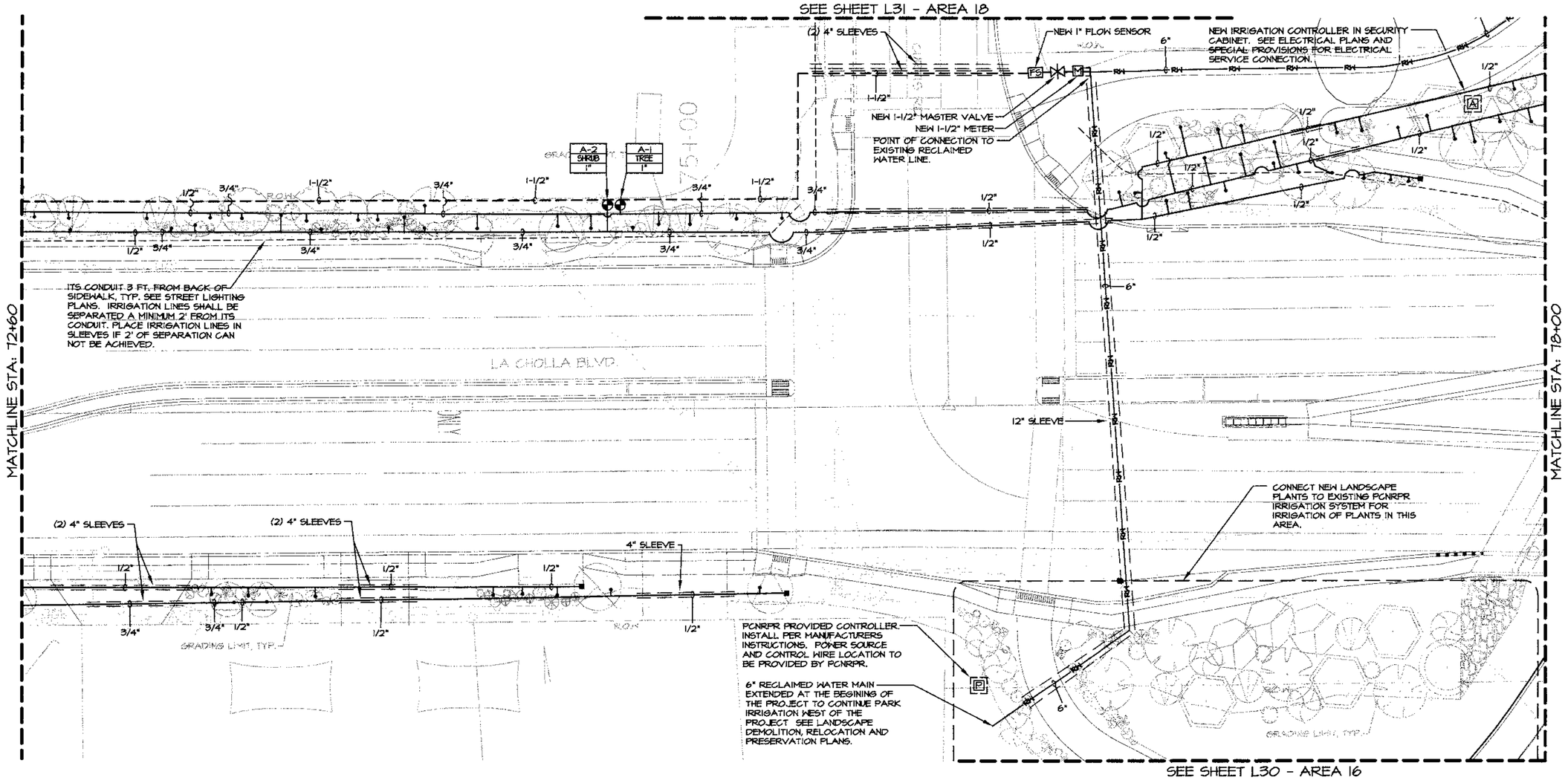

NOTE:
SEE SHEETS L32 AND L33 FOR IRRIGATION DETAILS AND SCHEDULE

NOTE:
IRRIGATION SYSTEM SHOWN SCHEMATICALLY FOR GRAPHIC CLARITY. CONTRACTOR SHALL LAY OUT IRRIGATION SYSTEM FOR APPROVAL BY PROJECT ENGINEER BEFORE TRENCHING.

NOTE:
ALL LATERAL LINE FLUSH END CAPS SHALL BE LOCATED SO THAT FLUSHING DOES NOT DISCHARGE DIRECTLY INTO WASHES OR DRAINAGES. LOCATIONS TO BE APPROVED BY ENGINEER.

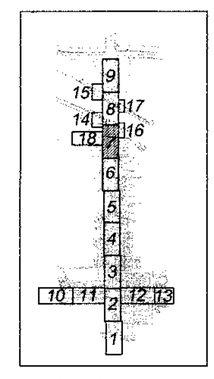

AREA KEY MAP
SCALE: N.T.S.

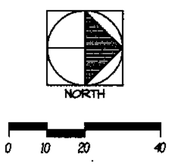

Two working days before you dig. CALL FOR THE BLUE STAKES
1-800-782-5348
Blue Stake Center
CALL COLLECT

No.	Revision Description	Engineer	Date

		Date
Designed	DDS	07/09
Drawn	PB	07/09
Checked	DKM	07/09
Proj. L.A.	DDS	07/09

REGISTERED LANDSCAPE ARCHITECT
CERTIFICATE NO. 48751
DARLENE D. SHOWALTER
Date Signed 07/09/09
ARIZONA, U.S.A.
Expires 12/31/2011

McGann & Associates
Landscape Architects and Planners
6814 North Oracle Rd. Suite 210
Tucson, Arizona 85704
Telephone (520) 297-9540 Fax (520) 297-9545

Pima County Department of Transportation
Priscilla S. Cornelio, P.E., Director

LA CHOLLA BLVD.
RUTHRAUFF RD. TO RIVER RD.
IRRIGATION PLAN
AREA 7

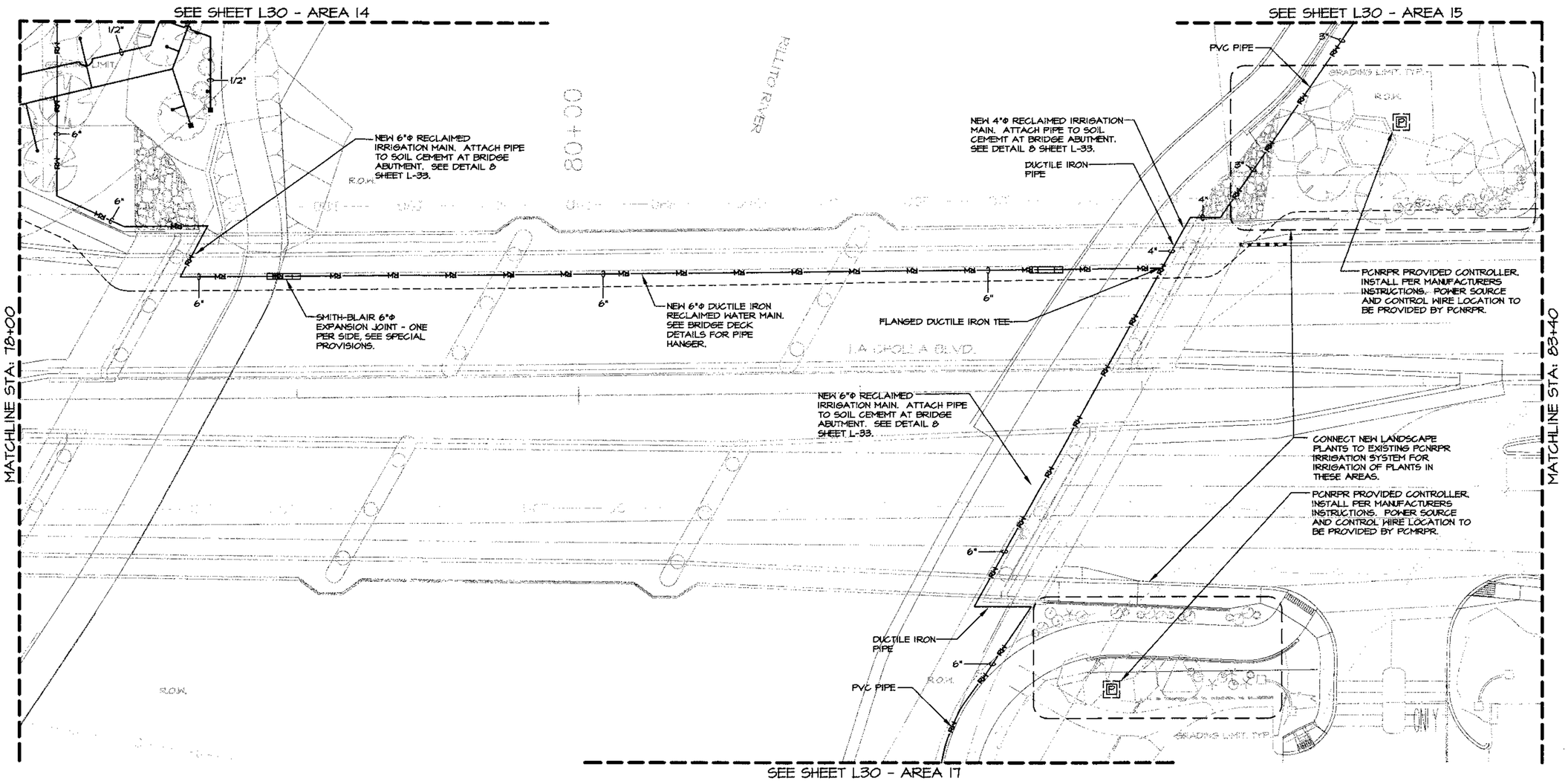

NOTE:
SEE SHEETS L32 AND L33 FOR IRRIGATION DETAILS AND SCHEDULE

NOTE:
IRRIGATION SYSTEM SHOWN SCHEMATICALLY FOR GRAPHIC CLARITY. CONTRACTOR SHALL LAY OUT IRRIGATION SYSTEM FOR APPROVAL BY PROJECT ENGINEER BEFORE TRENCHING.

NOTE:
ALL LATERAL LINE FLUSH END CAPS SHALL BE LOCATED SO THAT FLUSHING DOES NOT DISCHARGE DIRECTLY INTO WASHES OR DRAINAGES. LOCATIONS TO BE APPROVED BY ENGINEER.

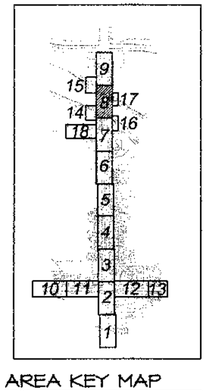

AREA KEY MAP
SCALE: N.T.S.

NORTH

0 10 20 40

Two working days before you dig CALL FOR THE BLUE STAKES
1-800-782-5348
Blue Stake Center CALL COLLECT

Pima County Department of Transportation

Priscilla S. Cornelio, P.E., Director

Designed	DDS	07/09
Drawn	PB	07/09
Checked	DKM	07/09
Proj. L.A.	DDS	07/09

No.	Revision Description	Engineer	Date

REGISTERED LANDSCAPE ARCHITECT 48751 DARLENE D. SHOWALTER Date Signed 6-23-10 ARIZONA, U.S.A.
Expires 12/31/2011

McGann & Associates
Landscape Architects and Planners
6894 North Oracle Rd., Suite 210
Tucson, Arizona 85704
Telephone: (520) 297-9540 Fax: (520) 297-9545

LA CHOLLA BLVD.
RUTHRAUFF RD. TO RIVER RD.
IRRIGATION PLAN
AREA 8

Scales	1" = 20'	Sheet L24 of L35	Page 226 of 356

SEE SHEET L30 - AREA 15

MATCHLINE STA: 83+40

END OF PROJECT

1/2"

4" SLEEVE

ITS CONDUIT 3 FT. FROM BACK OF SIDEWALK, TYP. IRRIGATION LINES SHALL BE SEPARATED A MINIMUM 2' FROM ITS CONDUIT. PLACE IRRIGATION LINES IN SLEEVES IF 2' OF SEPARATION CAN NOT BE ACHIEVED.

LOCATE AND CONNECT TO EXISTING CAPPED SHRUB AND TREE LATERAL IN THIS LOCATION.

LA CHOLLA BLVD.

R.O.W.

NOTE:
SEE SHEETS L32 AND L33 FOR IRRIGATION DETAILS AND SCHEDULE

NOTE:
IRRIGATION SYSTEM SHOWN SCHEMATICALLY FOR GRAPHIC CLARITY. CONTRACTOR SHALL LAY OUT IRRIGATION SYSTEM FOR APPROVAL BY PROJECT ENGINEER BEFORE TRENCHING.

NOTE:
ALL LATERAL LINE FLUSH END CAPS SHALL BE LOCATED SO THAT FLUSHING DOES NOT DISCHARGE DIRECTLY INTO WASHES OR DRAINAGES. LOCATIONS TO BE APPROVED BY ENGINEER.

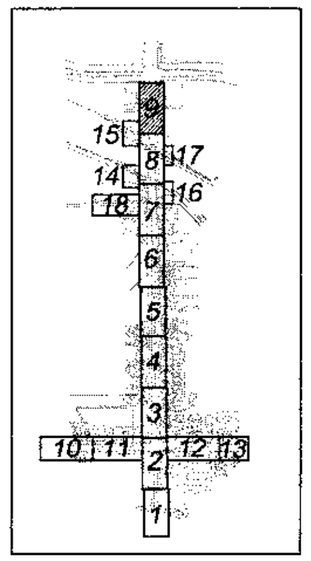

AREA KEY MAP
SCALE: N.T.S.

NORTH

0 10 20 40

Two working days before you dig CALL FOR THE BLUE STAKES
1-800-782-5348
Blue Stake Center CALL COLLECT

Pima County Department of Transportation

Priscilla S. Cornelio, P.E., Director

Designed	DDS	07/09
Drawn	PB	07/09
Checked	DKM	07/09
Proj. L.A.	DDS	07/09

No.	Revision Description	Engineer	Date

REGISTERED LANDSCAPE ARCHITECT
CERTIFICATE NO. 46751
DARLENE D. SHOWALTER
Date Signed 8-21-09
ARIZONA, U.S.A.
Expires 12/31/2011

McGann & Associates
Landscape Architects and Planners
6814 North Oracle Rd., Suite 210
Tucson, Arizona 85704
Telephone: (520) 297-9540 Fax: (520) 297-9545

LA CHOLLA BLVD.
RUTHRAUFF RD. TO RIVER RD.
IRRIGATION PLAN
AREA 9

Scales	1" = 20'	Sheet L25 of L35	Page 227 of 356

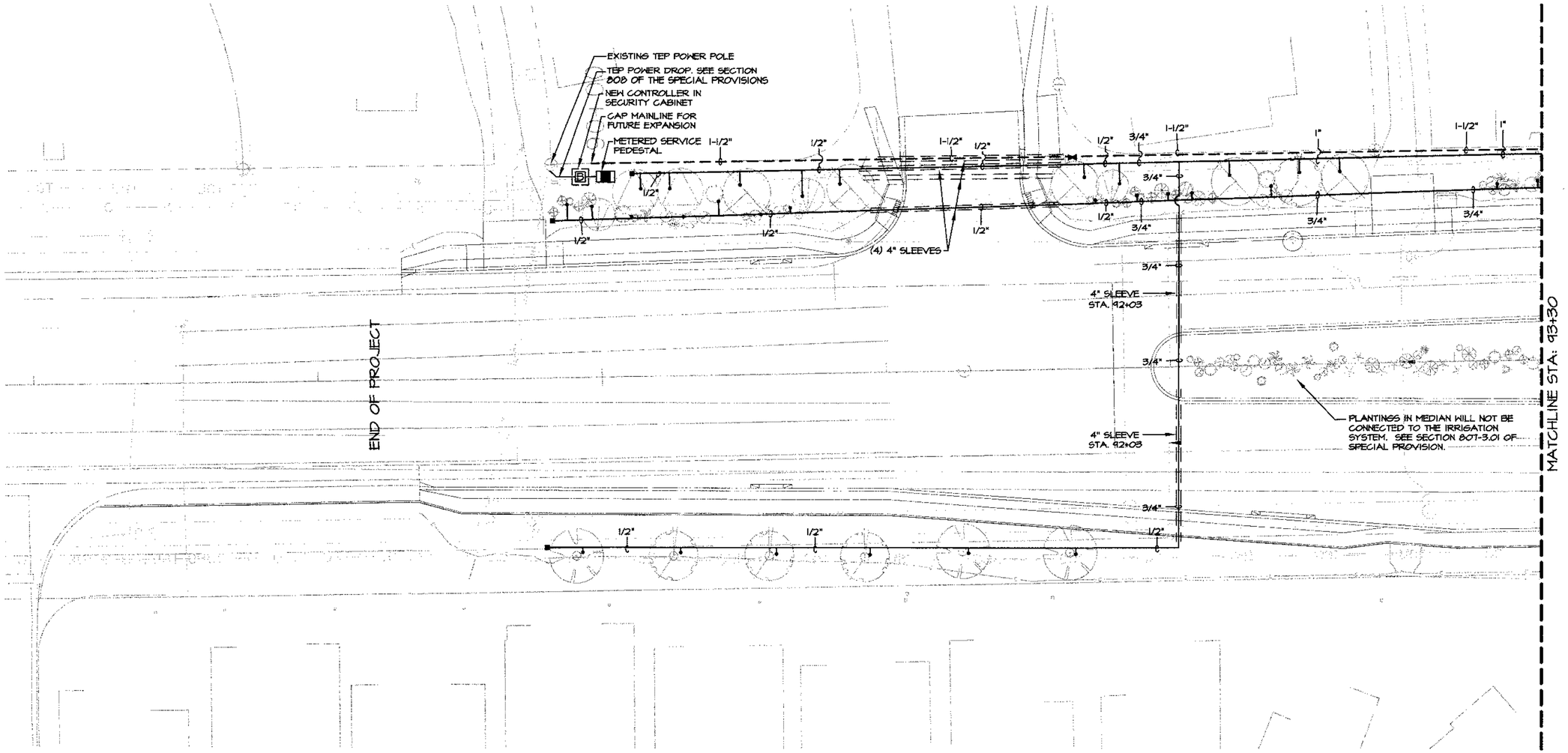

NOTE:
SEE SHEETS L32 AND L33 FOR IRRIGATION DETAILS AND SCHEDULE

NOTE:
IRRIGATION SYSTEM SHOWN SCHEMATICALLY FOR GRAPHIC CLARITY, CONTRACTOR SHALL LAY OUT IRRIGATION SYSTEM FOR APPROVAL BY PROJECT ENGINEER BEFORE TRENCHING.

NOTE:
ALL LATERAL LINE FLUSH END CAPS SHALL BE LOCATED SO THAT FLUSHING DOES NOT DISCHARGE DIRECTLY INTO WASHES OR DRAINAGES. LOCATIONS TO BE APPROVED BY ENGINEER.

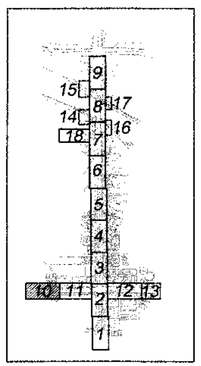

AREA KEY MAP
SCALE: N.T.S.

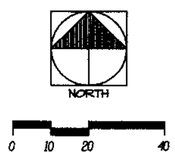

Two working days before you dig
CALL FOR THE BLUE STAKES
1-800-782-5348
Blue Stake Center
CALL COLLECT

No.	Revision Description	Engineer	Date

		Date
Designed	DDS	07/09
Drawn	PB	07/09
Checked	DKM	07/09
Proj. L.A.	DDS	07/09

REGISTERED LANDSCAPE ARCHITECT
48751
DARLENE D. SHOWALTER
Date Signed 6-26-09
ARIZONA, U.S.A.
Expires 12/31/2011

McGann & Associates
Landscape Architects and Planners
6914 North Oracle Rd. Suite 210
Tucson, Arizona 85704
Telephone: (520) 297-9540 Fax: (520) 297-9545

Pima County Department of Transportation
Priscilla S. Cornelio, P.E., Director

LA CHOLLA BLVD.
RUTHRAUFF RD. TO RIVER RD.
IRRIGATION PLAN
AREA 10

Scales	1" = 20'	Sheet L26 of L35	Page 228 of 356

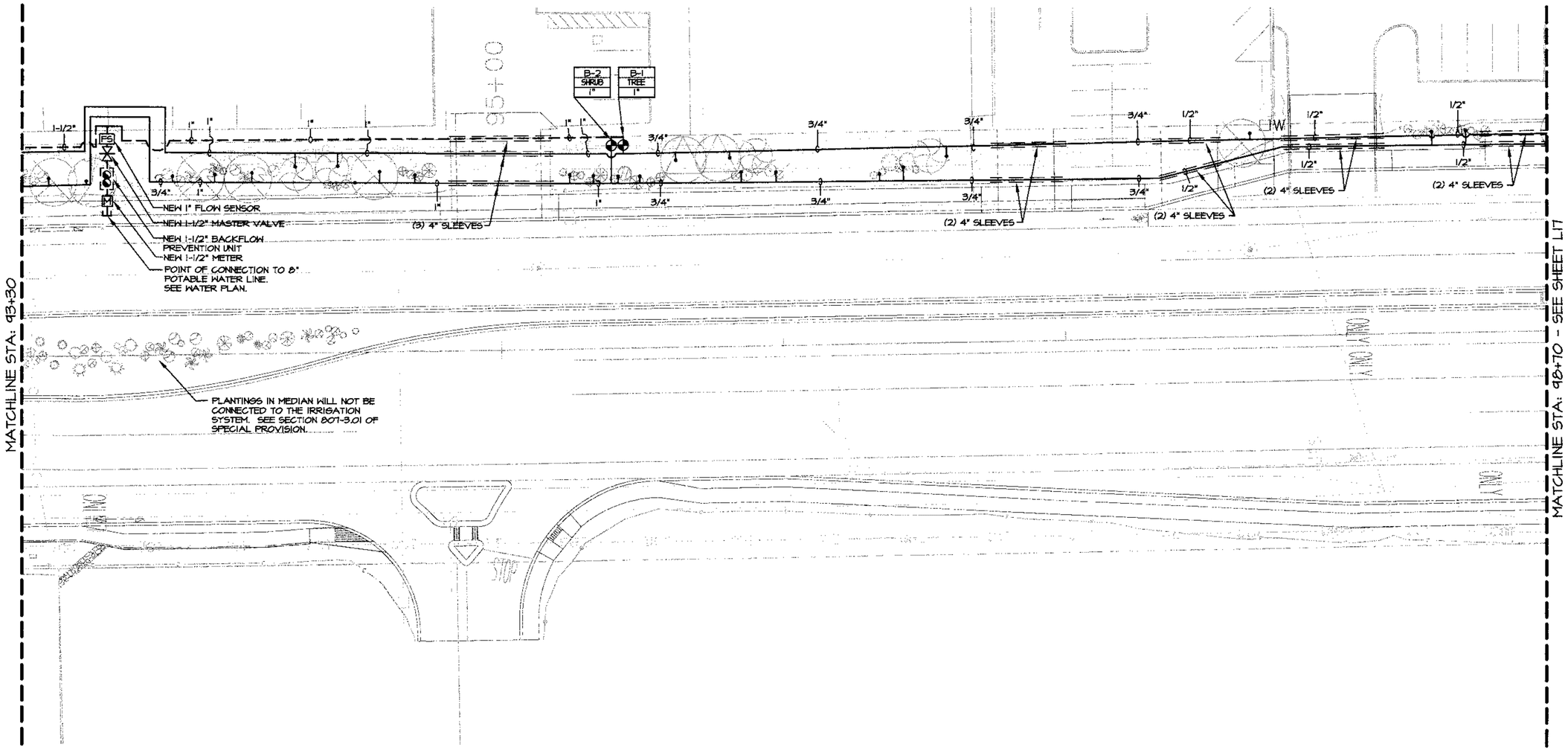

NOTE:
SEE SHEETS L32 AND L33 FOR IRRIGATION DETAILS AND SCHEDULE

NOTE:
IRRIGATION SYSTEM SHOWN SCHEMATICALLY FOR GRAPHIC CLARITY. CONTRACTOR SHALL LAY OUT IRRIGATION SYSTEM FOR APPROVAL BY PROJECT ENGINEER BEFORE TRENCHING.

NOTE:
ALL LATERAL LINE FLUSH END CAPS SHALL BE LOCATED SO THAT FLUSHING DOES NOT DISCHARGE DIRECTLY INTO WASHES OR DRAINAGES. LOCATIONS TO BE APPROVED BY ENGINEER.

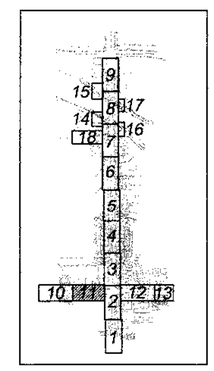

AREA KEY MAP
SCALE: N.T.S.

NORTH

0 10 20 40

Two working days before you dig. CALL FOR THE BLUE STAKES
1-800-782-5348
Blue Stake Center CALL COLLECT

Pima County Department of Transportation

Priscilla S. Cornelio, P.E., Director

No.	Revision Description	Engineer	Date

		Date
Designed	DDS	07/09
Drawn	PB	07/09
Checked	DKM	07/09
Proj. L.A.	DDS	07/09

REGISTERED LANDSCAPE ARCHITECT
CERTIFICATE NO. 48751
DARLENE D. SHOWALTER
Date Signed 8-21-09
ARIZONA, U.S.A.
Expires 12/31/2011

McGann & Associates
Landscape Architects and Planners
6874 North Oracle Rd., Suite 210
Tucson, Arizona 85704
Telephone: (520) 297-9540 Fax: (520) 297-9545

LA CHOLLA BLVD.
RUTHRAUFF RD. TO RIVER RD.
IRRIGATION PLAN
AREA 11

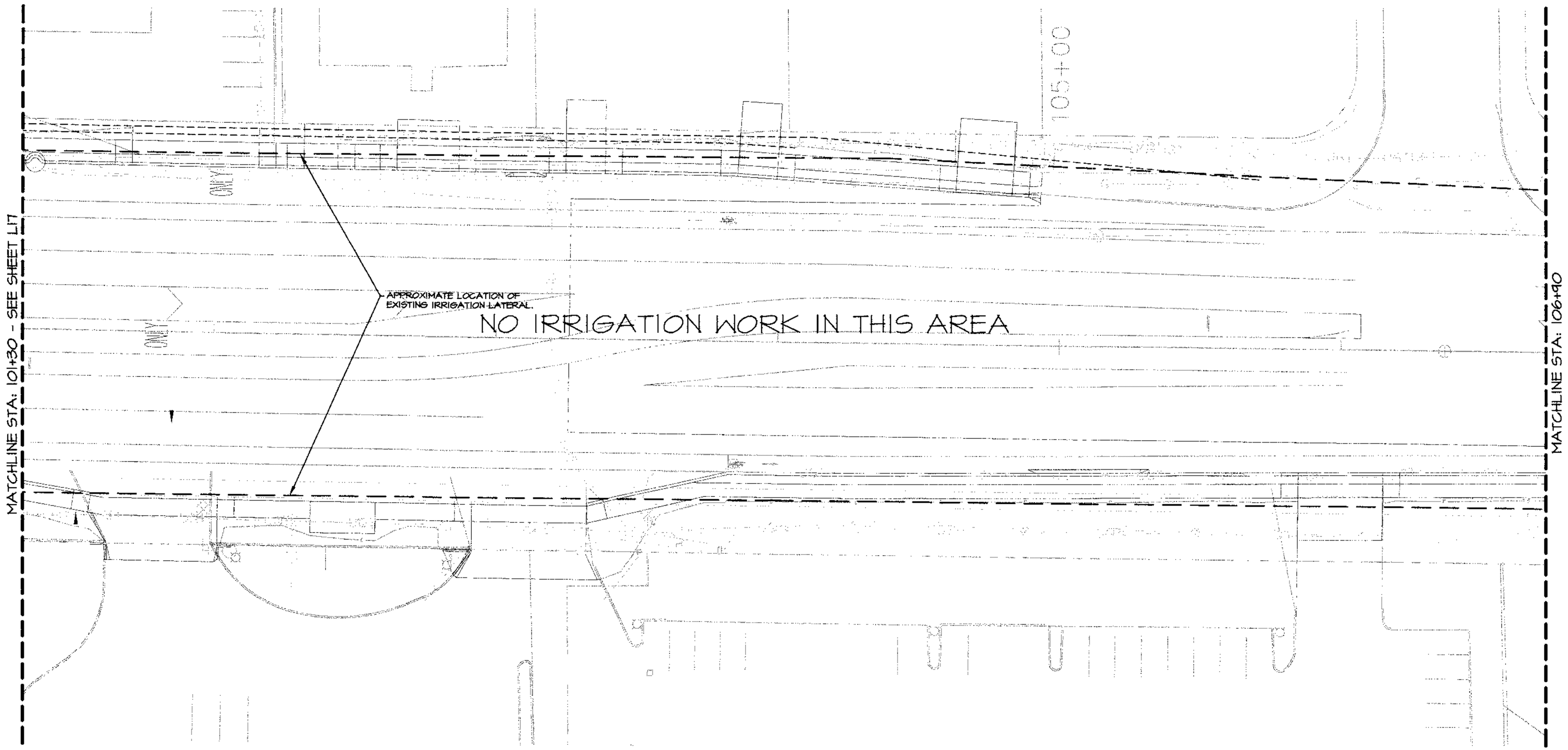

NOTE:
SEE SHEETS L32 AND L33 FOR IRRIGATION DETAILS AND SCHEDULE

NOTE:
IRRIGATION SYSTEM SHOWN SCHEMATICALLY FOR GRAPHIC CLARITY. CONTRACTOR SHALL LAY OUT IRRIGATION SYSTEM FOR APPROVAL BY PROJECT ENGINEER BEFORE TRENCHING.

NOTE:
ALL LATERAL LINE FLUSH END CAPS SHALL BE LOCATED SO THAT FLUSHING DOES NOT DISCHARGE DIRECTLY INTO WASHES OR DRAINAGES. LOCATIONS TO BE APPROVED BY ENGINEER.

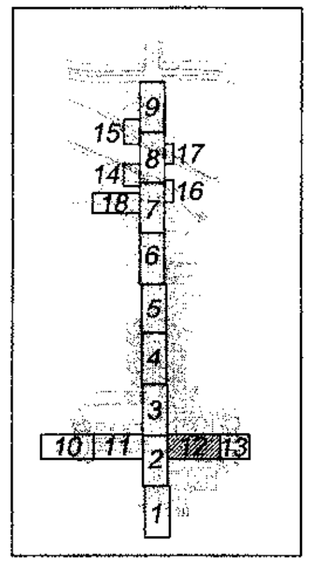

AREA KEY MAP
SCALE: N.T.S.

NORTH

0 10 20' 40

Two working days before you dig
CALL FOR THE BLUE STAKES
1-800-782-5348
Blue Stake Center
CALL COLLECT

Pima County Department of Transportation

Priscilla S. Cornelio, P.E., Director

No.	Revision Description	Engineer	Date

		Date
Designed	DDS	07/09
Drawn	PB	07/09
Checked	DKM	07/09
Proj. L.A.	DDS	07/09

REGISTERED LANDSCAPE ARCHITECT
48751
DARLENE D. SHOWALTER
ARIZONA, U.S.A.
Expires 12/31/2011

McGann & Associates
Landscape Architects and Planners
6816 North Oracle Rd. Suite 210
Tucson, Arizona 85704
Telephone: (520) 297-9540 Fax: (520) 297-9545

LA CHOLLA BLVD.
RUTHRAUFF RD. TO RIVER RD.
IRRIGATION PLAN
AREA 12

Scales	1" = 20'	Sheet L28 of L35	Page 230 of 356

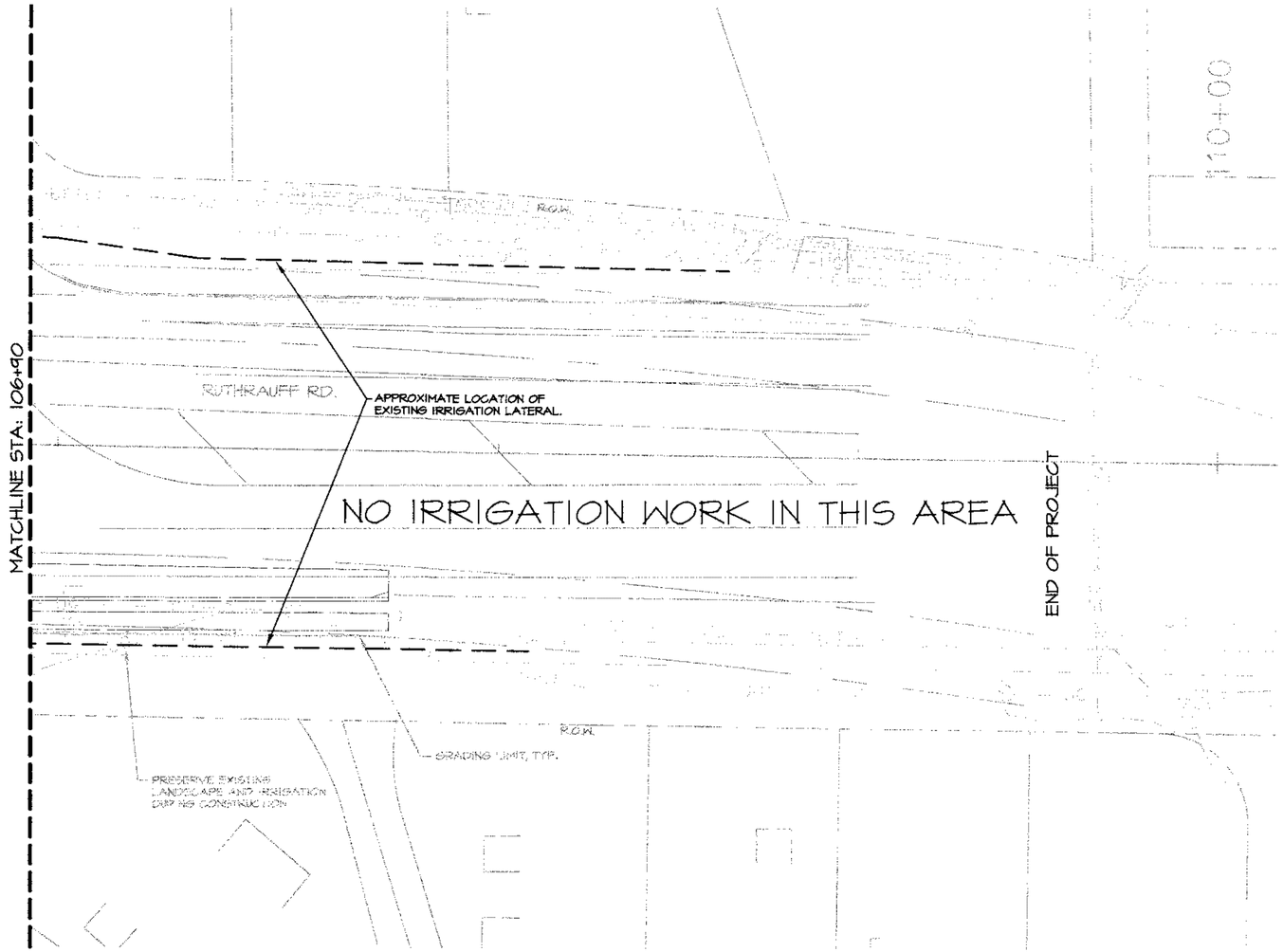

NOTE:
SEE SHEETS L32 AND L33 FOR IRRIGATION DETAILS AND SCHEDULE

NOTE:
IRRIGATION SYSTEM SHOWN SCHEMATICALLY FOR GRAPHIC CLARITY. CONTRACTOR SHALL LAY OUT IRRIGATION SYSTEM FOR APPROVAL BY PROJECT ENGINEER BEFORE TRENCHING.

NOTE:
ALL LATERAL LINE FLUSH END CAPS SHALL BE LOCATED SO THAT FLUSHING DOES NOT DISCHARGE DIRECTLY INTO WASHES OR DRAINAGES. LOCATIONS TO BE APPROVED BY ENGINEER.

AREA KEY MAP
SCALE: N.T.S.

Two working days before you dig
CALL FOR THE BLUE STAKES
1-800-782-5348
Blue Stake Center
CALL COLLECT

Pima County Department of Transportation

Priscilla S. Cornelio, P.E., Director

No.	Revision Description	Engineer	Date

		Date
Designed	DDS	07/09
Drawn	PB	07/09
Checked	DKM	07/09
Proj. L.A.	DDS	07/09

REGISTERED LANDSCAPE ARCHITECT
CERTIFICATE NO. L-68751
DARLENE D. SHOWALTER
Date Signed 8-21-09
ARIZONA, U.S.A.
Expires 12/31/2011

McGann & Associates
Landscape Architects and Planners
6974 North Oracle Rd., Suite 210
Tucson, Arizona 85704
Telephone: (520) 297-9540 Fax: (520) 297-9545

LA CHOLLA BLVD.
RUTHRAUFF RD. TO RIVER RD.
IRRIGATION PLAN
AREA 13

Scales	1" = 20'	Sheet L29 of L35	Page 231 of 356

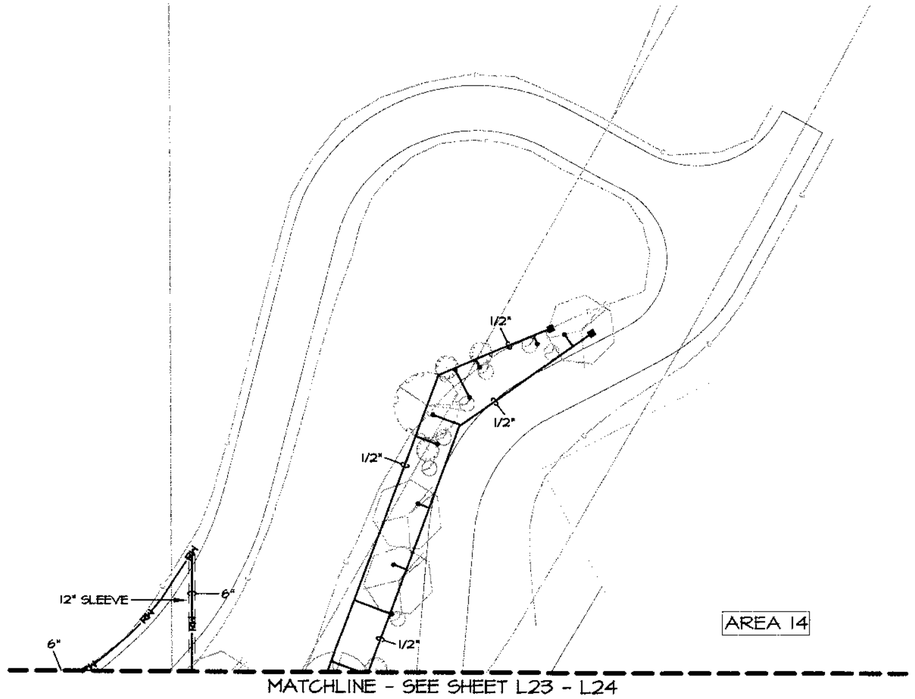

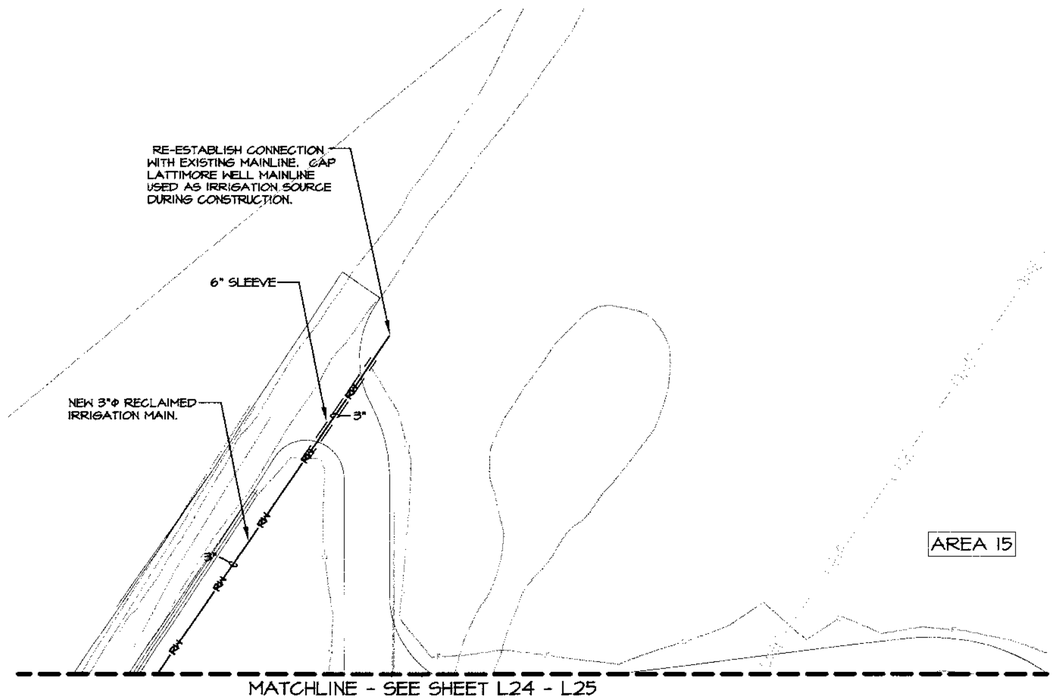

NOTE:
SEE SHEETS L32 AND L33 FOR IRRIGATION DETAILS AND SCHEDULE

NOTE:
IRRIGATION SYSTEM SHOWN SCHEMATICALLY FOR GRAPHIC CLARITY. CONTRACTOR SHALL LAY OUT IRRIGATION SYSTEM FOR APPROVAL BY PROJECT ENGINEER BEFORE TRENCHING.

NOTE:
ALL LATERAL LINE FLUSH END CAPS SHALL BE LOCATED SO THAT FLUSHING DOES NOT DISCHARGE DIRECTLY INTO WASHES OR DRAINAGES. LOCATIONS TO BE APPROVED BY ENGINEER.

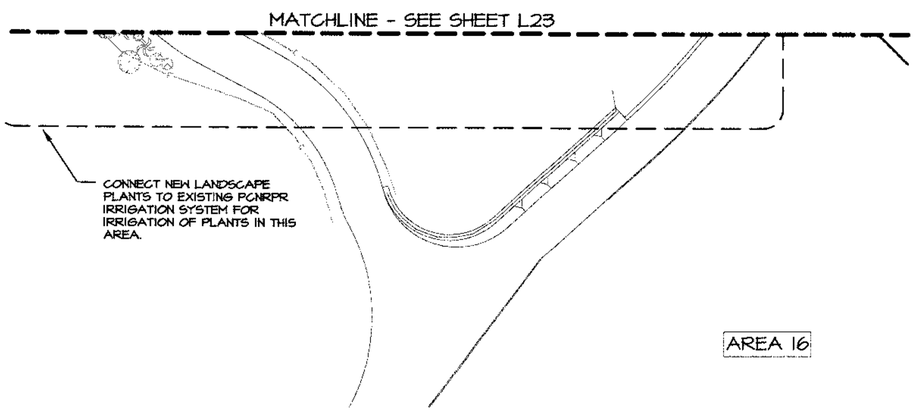

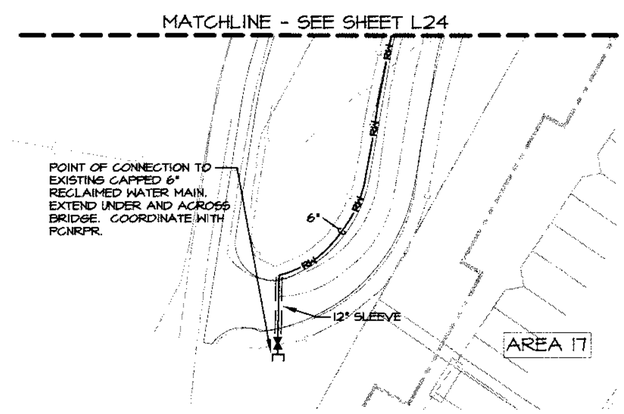

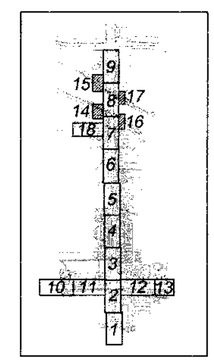

AREA KEY MAP
SCALE: N.T.S.

NORTH

0 10 20 40

Two working days before you dig CALL FOR THE BLUE STAKES
1-800-782-5348
Blue Stake Center CALL COLLECT

Priscilla S. Cornelio, P.E., Director

Designed	DDS	07/09
Drawn	PB	07/09
Checked	DKM	07/09
Proj. L.A.	DDS	07/09

No.	Revision Description	Engineer	Date

REGISTERED LANDSCAPE ARCHITECT
CERTIFICATE NO. 48751
DARLENE D. SHOWALTER
Date Signed 8-21-09
ARIZONA, U.S.A.
Expires 12/31/2011

McGann & Associates
Landscape Architects and Planners
8814 North Oracle Rd., Suite 210
Tucson, Arizona 85704
Telephone (520) 297-9540 Fax (520) 297-9545

Pima County Department of Transportation

LA CHOLLA BLVD.
RUTHRAUFF RD. TO RIVER RD.

LANDSCAPE PLAN
AREAS 14, 15, 16 & 17

Scales	1" = 20'	Sheet L30 of L35	Page 232 of 356

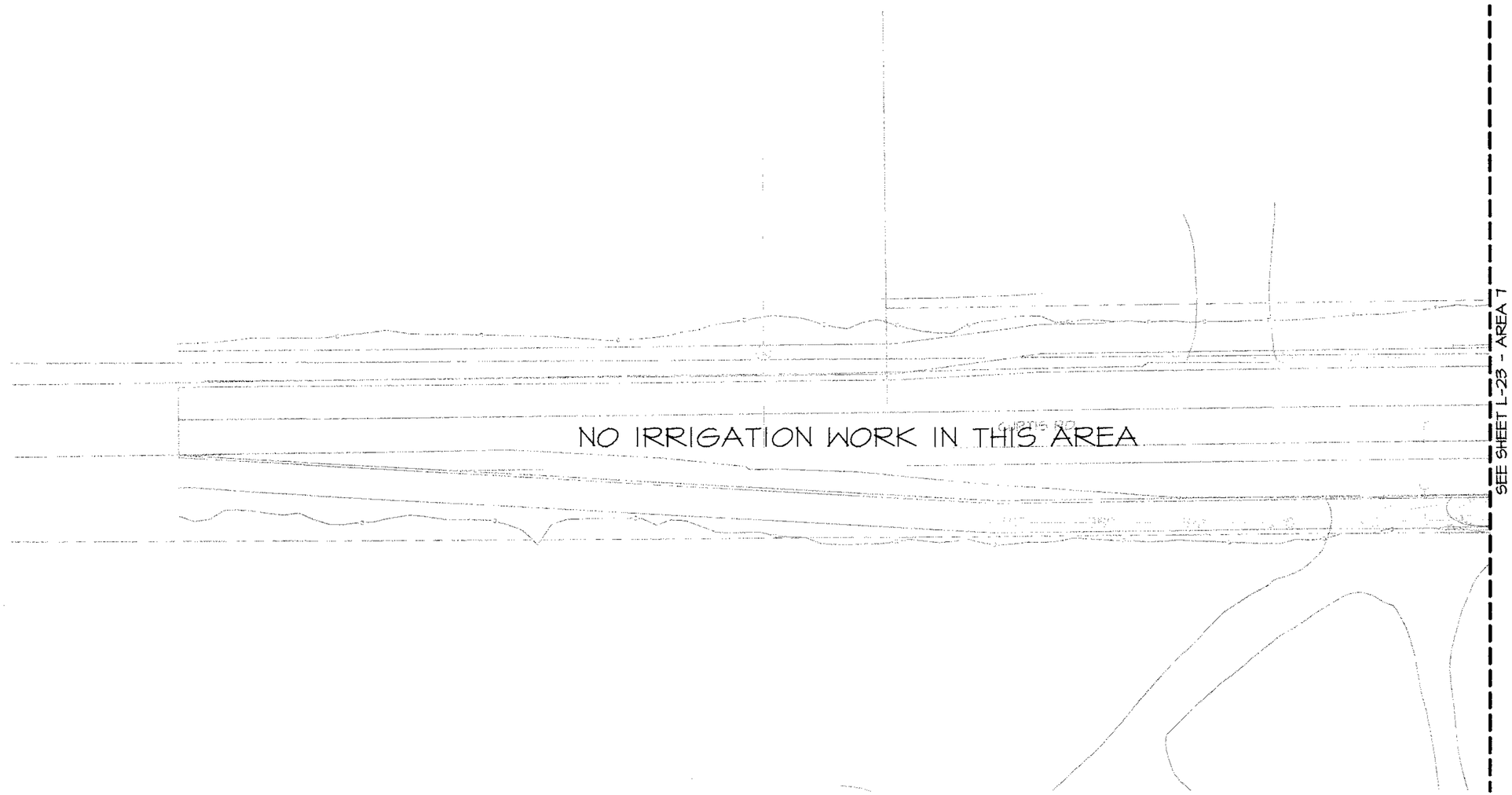

NOTE:
SEE SHEETS L32 AND L33 FOR IRRIGATION DETAILS AND SCHEDULE

NOTE:
IRRIGATION DRAWING SHOWN SCHEMATICALLY FOR GRAPHIC CLARITY. CONTRACTOR SHALL LAY OUT IRRIGATION SYSTEM FOR APPROVAL BY PROJECT ENGINEER BEFORE TRENCHING.

NOTE:
ALL LATERAL LINE FLUSH END CAPS SHALL BE LOCATED SO THAT FLUSHING DOES NOT DISCHARGE DIRECTLY INTO WASHES OR DRAINAGES. LOCATIONS TO BE APPROVED BY ENGINEER.

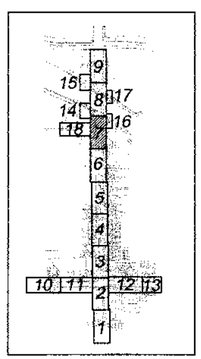

AREA KEY MAP
SCALE: N.T.S.

NORTH

0 10 20 40

Two working days before you dig
CALL FOR THE BLUE STAKES
1-800-782-5348
Blue Stake Center
CALL COLLECT

Priscilla S. Cornelio, P.E., Director

Pima County Department of Transportation

No.	Revision Description	Engineer	Date

		Date
Designed	DDS	07/09
Drawn	PB	07/09
Checked	DKM	07/09
Proj. L.A.	DDS	07/09

REGISTERED LANDSCAPE ARCHITECT
CERTIFICATE NO.
48751
DARLENE D. SHOWALTER
Date Signed 6/30/09
ARIZONA, U.S.A.
Expires 12/31/2011

McGann & Associates
Landscape Architects and Planners
6836 North Oracle Rd. Suite 210
Tucson, Arizona 85704
Telephone: (520) 297-9540 Fax: (520) 297-9548

LA CHOLLA BLVD.
RUTHRAUFF RD. TO RIVER RD.
IRRIGATION PLAN
AREA 18

Scales	1" = 20'	Sheet L31 of L35	Page 233 of 356

NOTE: COORDINATE INSTALLATION OF IRRIGATION CONTROLLER WITH OWNER'S REPRESENTATIVE. BEFORE INSTALLATION, OBTAIN APPROVAL FOR CONTROLLER LOCATION, WIRE ROUTING AND PROPOSED CONNECTION TO ELECTRICAL SERVICE.

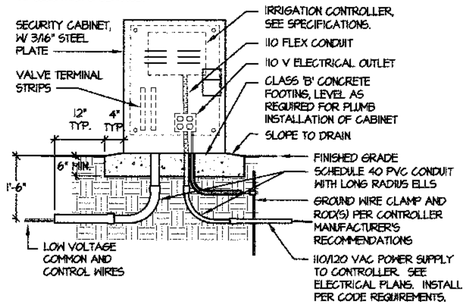

1 IRRIGATION CONTROLLER IN SECURITY ENCLOSURE

SCALE: N.T.S. IR-2.1

NOTES:
1. ALL WIRES TO BE INSTALLED PER LOCAL CODE. TAPE AND BUNDLE WIRES EVERY 7'. PROVIDE EXPANSION COIL AT EACH WIRE CONNECTION IN VALVE BOX (WRAP AROUND 1/2" Φ PIPE 15 TIMES).
2. COMPACT SOIL AROUND VALVE BOX TO SAME DENSITY AS ADJACENT UNDISTURBED SOIL.
3. ALL THREADED PVC JOINTS SHALL BE WRAPPED WITH TEFLON TAPE.

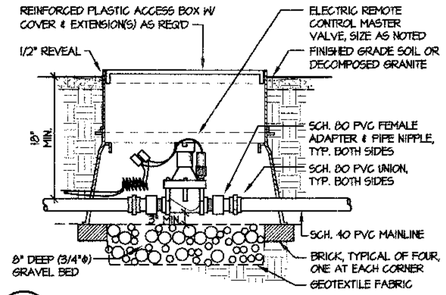

2 MASTER VALVE ASSEMBLY

SCALE: N.T.S. I-102

NOTES:
1. SELECT BACKFILL SHALL BE SAND OR SOIL FREE OF ROCKS AND STONES LARGER THAN 1/4" DIA.
2. BACKFILL MATERIAL SHALL BE WATERED IN AND COMPACTED TO DENSITY OF ADJACENT UNDISTURBED SOIL.

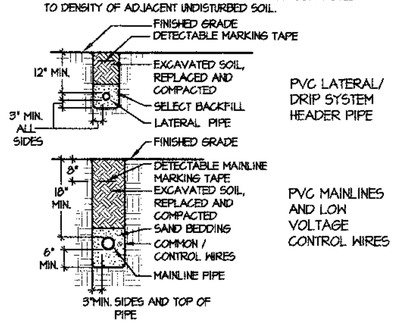

3 PIPE TRENCHING AND BACKFILL - MAINLINES, LATERALS & MARKING TAPE

SCALE: N.T.S. I-104

NOTE: BACKFILL WITHIN 3" OF SLEEVE SHALL BE FREE OF ROCKS AND STONES LARGER THAN 1/4"Φ. IF ROCK CANNOT BE REMOVED FROM EXCAVATED SOIL, PROVIDE CLEAN SAND BEDDING.

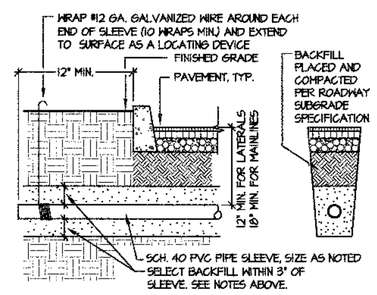

4 SLEEVE UNDER STREET OR PARKING LOT

SCALE: N.T.S. I-105

IRRIGATION EQUIPMENT SCHEDULE

SYMBOL	DESCRIPTION	MAKE / MODEL / TYPE / NOTES
M	IRRIGATION WATER METER (RECLAIMED) IRRIGATION WATER METER (POTABLE)	NEW 1-1/2" WATER METER. SEE SPECIFICATIONS / WATER SYSTEM PLANS. NEW 1-1/2" WATER METER. SEE SPECIFICATIONS / WATER SYSTEM PLANS.
	BACKFLOW PREVENTER IN SECURITY ENCLOSURE	BACKFLOW PREVENTER: FEBCO MODEL 825-Y, 1-1/2" SIZE SECURITY ENCLOSURE: LEMEUR MODEL LBF-99
A B P	STAND ALONE CONTROLLERS IN METAL CABINET	CONTROLLER A: RAINMASTER 30 EGI-T (RECLAIMED SYSTEM) CONTROLLER B: IRRITROL MC-24E (POTABLE SYSTEM) SECURITY CABINET: COLD-ROLLED STEEL. FREE-STANDING, LOCKABLE LEMEUR MODEL LE-A-CR CONTROLLER P: PARKS SUPPLIED CONTROLLERS AND CABINETS TO BE INSTALLED BY CONTRACTOR
	MASTER VALVE	NORMALLY CLOSED, 24 V SOLENOID - BUCKNER - MODEL VB SERIES. 1-1/2" SIZE
FS	FLOW SENSOR IN ACCESS BOX	FLOW SENSOR (1" SIZE): SEE SPECIAL PROVISIONS ACCESS BOX: HEAVY-DUTY REINFORCED PLASTIC W/BOLT-DOWN LIDS NDS - COLOR: PURPLE FOR RECLAIMED WATER, TAN FOR POTABLE WATER
	MAINLINE PIPE	MAINLINE PIPE: SCHEDULE 40 PVC PIPE, SIZE AS NOTED FITTINGS: SCHEDULE 40 PVC FITTINGS FITTINGS FOR R.C.V. ASSEMBLIES: SCHEDULE 80 PVC FITTINGS COLOR: PURPLE FOR RECLAIMED WATER, WHITE FOR POTABLE WATER
	LATERAL LINE PIPE	PIPE: SCHEDULE 40 PVC PIPE, SIZE AS NOTED FITTINGS: SCHEDULE 40 PVC FITTINGS COLOR: PURPLE FOR RECLAIMED WATER, WHITE FOR POTABLE WATER
	PIPE SLEEVE	SLEEVE: SCHEDULE 40 PVC SLEEVE, SIZE 6" UNLESS NOTED
	BALL VALVE (ISOLATION VALVE IN ACCESS BOX	BALL VALVE: BRASS BODY W/FULL PORT BALL VALVE - WATTS MODEL FBV (INCOMING LINE SIZE) ACCESS BOX: HEAVY-DUTY REINFORCED PLASTIC W/BOLT-DOWN LIDS NDS - COLOR: PURPLE FOR RECLAIMED WATER NDS - COLOR: TAN FOR POTABLE WATER
	REMOTE CONTROL VALVE ASSEMBLY FOR DRIP ZONES IN ACCESS BOX	REMOTE CONTROL VALVE: RAIN BIRD MODEL PESB-R (RECLAIMED), PESB (POTABLE) BALL VALVE: WATTS MODEL FBV (SAME SIZE AS REMOTE CONTROL VALVE) IN-LINE PRESSURE REGULATING VALVE, PERMANENTLY ASSEMBLED: SENNINGER PMR-MF-30 IN-LINE FILTER W/REMOVABLE SCREEN: AGRICULTURAL PRODUCTS MODEL 4E SERIES ACCESS BOX: HEAVY-DUTY REINFORCED PLASTIC W/BOLT-DOWN LIDS NDS - COLOR: PURPLE FOR RECLAIMED WATER NDS - COLOR: TAN FOR POTABLE WATER
•	MULTI-OUTLET EMITTER - 6	MULTI-OUTLET EMITTER: PERMANENTLY ASSEMBLED, PRESSURE COMPENSATING RAINBIRD MODEL XBT-10-6 EMITTER RISER: SCHEDULE 40 PVC PIPE WITH SCHEDULE 40 MALE ADAPTER FITTING DISTRIBUTION TUBING: RAIN BIRD MODEL DT-025
•	SINGLE-OUTLET EMITTER	SINGLE-OUTLET EMITTER: PERMANENTLY ASSEMBLED, PRESSURE COMPENSATING RAINBIRD MODEL XBT-10 EMITTER RISER: SCHEDULE 40 PVC PIPE WITH SCHEDULE 40 MALE ADAPTER FITTING DISTRIBUTION TUBING: RAIN BIRD MODEL DT-025
■	PVC LATERAL FLUSH CAP IN ACCESS BOX	FLUSH CAP: SCH. 40 PVC RISER W/ SCH. 40 PVC M.A., SCH. 40 PVC THREADED CAP AND SCH. 40 PVC BALL VALVE ACCESS BOX: CARSON MODEL 708
A-1 TREE 1"	REMOTE CONTROL VALVE IDENTIFICATION INFORMATION	(A-1): CONTROLLER AND STATION ASSIGNMENT (TREE): TYPE OF ZONE (SPRAY, BUBBLER, DRIP/TREE, DRIP/SHRUB, ETC.) (1"): SIZE OF VALVE

NOTE: THE IRRIGATION SCHEDULE ABOVE AND THE DETAILS PROVIDED ON THIS SHEET MAY INCLUDE ITEMS NOT REQUIRED FOR THE CONSTRUCTION OF THE IRRIGATION SYSTEM ASSOCIATED WITH THIS PROJECT.

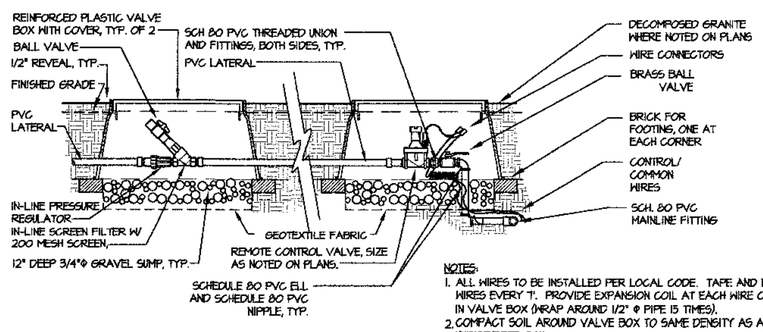

NOTES:
1. ALL WIRES TO BE INSTALLED PER LOCAL CODE. TAPE AND BUNDLE WIRES EVERY 7'. PROVIDE EXPANSION COIL AT EACH WIRE CONNECTION IN VALVE BOX (WRAP AROUND 1/2" Φ PIPE 15 TIMES).
2. COMPACT SOIL AROUND VALVE BOX TO SAME DENSITY AS ADJACENT UNDISTURBED SOIL.
3. ALL THREADED PVC JOINTS SHALL BE WRAPPED WITH TEFLON TAPE.

5 REMOTE CONTROL VALVE ASSEMBLY - DRIP ZONE

SCALE: N.T.S. I-107

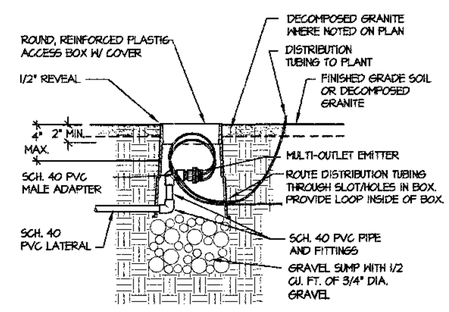

6 MULTI OUTLET EMITTER - SIX OUTLET

SCALE: N.T.S. I-108

Two working days before you dig CALL FOR THE BLUE STAKES
1-800-782-5348
Blue Stake Center CALL COLLECT

Pima County Department of Transportation

LA CHOLLA BLVD.
RUTHRAUFF RD. TO RIVER RD.
IRRIGATION
DETAILS AND SCHEDULE

Priscilla S. Cornelio, P.E., Director

No.	Revision Description	Engineer	Date

		Date
Designed	DDS	07/09
Drawn	PB	07/09
Checked	DKM	07/09
Proj. L.A.	DDS	07/09

REGISTERED LANDSCAPE ARCHITECT CERTIFICATE NO. 48751 DARLENE D. SHOWALTER ARIZONA U.S.A.
Date Signed
Expires 12/31/2011

McGann & Associates
Landscape Architects and Planners
6884 North Oracle Rd. Suite 210
Tucson, Arizona 85704
Telephone: (520) 297-9540 Fax: (520) 297-9545

NOTE: USE TEFLON TAPE ON ALL THREADED CONNECTIONS.

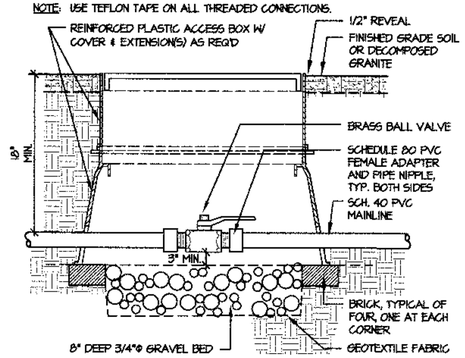

1 MAINLINE ISOLATION (BALL) VALVE (1/2" TO 1-1/2" SIZE)

SCALE: N.T.S. 1-108

NOTES:
1. LENGTH OF DISTRIBUTION TUBING SHALL NOT EXCEED 12'-0".
2. LAYOUT DISTRIBUTION TUBING AS SHOWN AND LOCATE DISCHARGE POINT 2" ABOVE FINISHED GRADE.

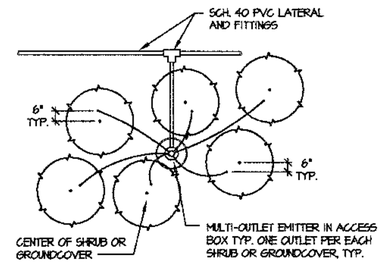

2 EMITTER DISTRIBUTION TUBING LAYOUT AT SHRUBS

SCALE: N.T.S. 1-110

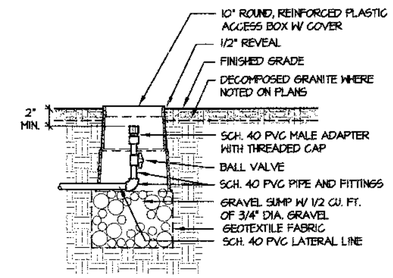

3 EMITTER LINE FLUSH CAP IN ACCESS BOX

SCALE: N.T.S. 1-111

NOTE:
PROVIDE PULSE DECODER, PULSE TRANSMITTER, PULSE TRANSMITTER POWER SUPPLY, AND SURGE PROTECTOR IN ACCORDANCE WITH FLOW SENSOR / CONTROL SYSTEM MANUFACTURER'S RECOMMENDATIONS.

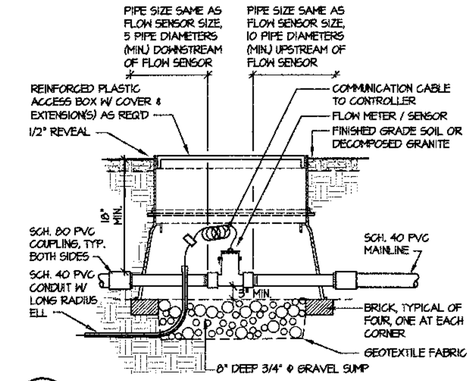

4 FLOW SENSOR ASSEMBLY

SCALE: N.T.S. 1-119

NOTE:
1. LAYOUT DISTRIBUTION TUBING AS SHOWN AND LOCATE DISCHARGE POINT ±2" ABOVE FINISHED GRADE.
2. MAXIMUM LENGTH OF DISTRIBUTION TUBING TO BE 15'.

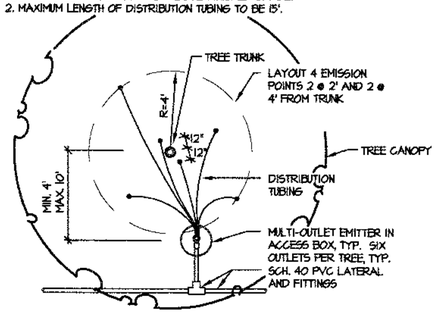

5 EMITTER DISTRIBUTION TUBING LAYOUT AT TREE - SIX OUTLET

SCALE: N.T.S. 1-109

NOTES:
1. SLEEVES UNDER WALKWAYS SHALL BE SCHEDULE 40 PVC PIPE. SIZE SHALL BE AS NOTED ON PLANS.
2. BACKFILL WITHIN 3" OF SLEEVE SHALL BE FREE OF ROCKS AND STONES LARGER THAN 1/4" DIA. IF ROCK CANNOT BE REMOVED FROM EXCAVATED SOIL, PROVIDE CLEAN SAND BEDDING.

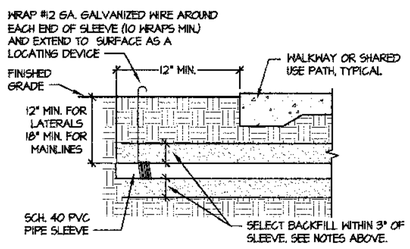

6 SLEEVE UNDER WALKWAY OR SHARED USE PATH

SCALE: N.T.S. 1-106

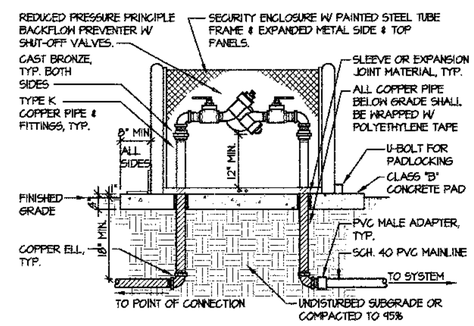

7 REDUCED PRESSURE PRINCIPLE BACKFLOW PREVENTER IN SECURITY ENCLOSURE

SCALE: N.T.S. 1-100

NOTES:
1. INSTALL FLANGED DUCTILE IRON PIPE (IRRIGATION MAINLINE)ON TOP OF SOIL CEMENT BANK PROTECTION. ANCHOR TO SOIL CEMENT WITH HOLD PIPE CLAMP AS DETAILED.
2. PIPE ANCHORS SHALL BE INSTALLED AT 15' INTERVALS IN THE AREAS BETWEEN BRIDGE GIRDERS.
3. REMOVE SOIL CEMENT AT FLANGE CONNECTIONS TO ALLOW PIPE TO LAY FLAT ON SURFACE.

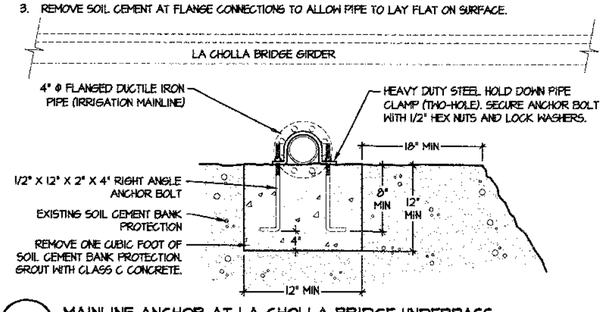

8 MAINLINE ANCHOR AT LA CHOLLA BRIDGE UNDERPASS

SCALE: N.T.S. PL-3.xx

Two working days before you dig CALL FOR THE BLUE STAKES 1-800-782-5348 Blue Stake Center CALL COLLECT

Pima County Department of Transportation

LA CHOLLA BLVD.
RUTHRAUFF RD. TO RIVER RD.
IRRIGATION DETAILS

No.	Revision Description	Engineer	Date

		Date
Designed	DDS	07/09
Drawn	PB	07/09
Checked	DKM	07/09
Proj. L.A.	DDS	07/09

Priscilla S. Cornelio, P.E., Director

REGISTERED LANDSCAPE ARCHITECT 48751 DARLENE D. SHOWALTER ARIZONA U.S.A.
Expires 12/31/2011

McGann & Associates
Landscape Architects and Planners
6974 North Oracle Rd., Suite 210
Tucson, Arizona 85704
Telephone: (520) 297-9540 Fax: (520) 297-9545

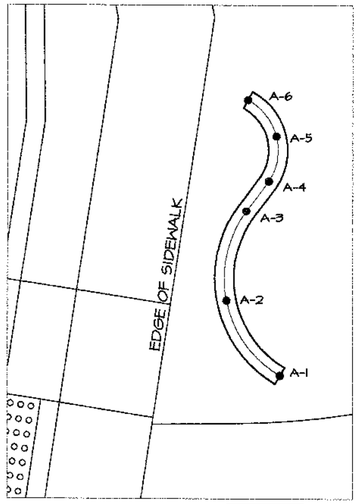

ENTRY WALL - A

SCALE: 1" = 4'

NORTH

LA CHOLLA BLVD. STATIONING

POINT	STATION	OFFSET
A-1	75+28.32	83.23' RIGHT
A-2	75+32.31	80.46' RIGHT
A-3	75+37.04	81.55' RIGHT
A-4	75+38.64	82.76' RIGHT
A-5	75+41.03	83.14' RIGHT
A-6	75+42.96	81.71' RIGHT

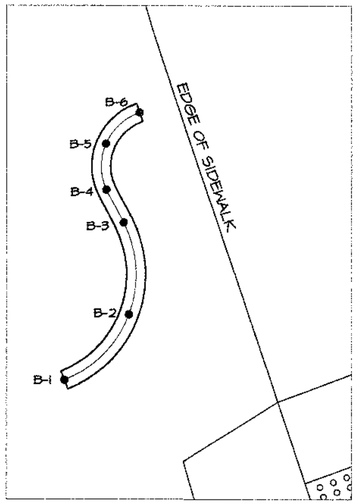

ENTRY WALL - B

SCALE: 1" = 4'

NORTH

LA CHOLLA BLVD. STATIONING

POINT	STATION	OFFSET
B-1	75+22.27	116.85' LEFT
B-2	75+25.70	113.41' LEFT
B-3	75+30.55	113.64' LEFT
B-4	75+32.34	114.53' LEFT
B-5	75+34.77	114.53' LEFT
B-6	75+36.40	112.73' LEFT

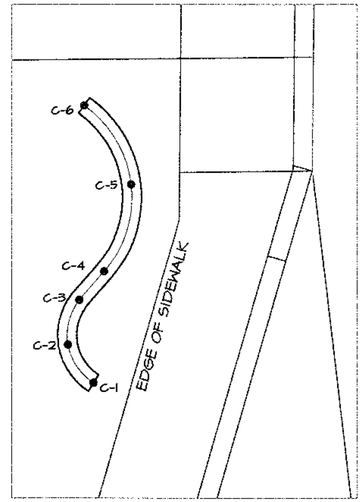

ENTRY WALL - C

SCALE: 1" = 4'

NORTH

LA CHOLLA BLVD. STATIONING

POINT	STATION	OFFSET
C-1	85+6.86	74.31' LEFT
C-2	85+8.92	75.36' LEFT
C-3	85+11.21	75.00' LEFT
C-4	85+12.76	73.68' LEFT
C-5	85+17.34	72.20' LEFT
C-6	85+21.59	74.63' LEFT

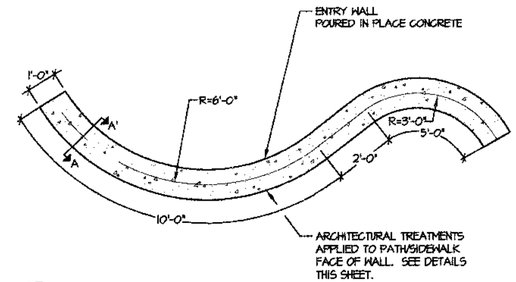

1 ENTRY WALL - PLAN

SCALE: N.T.S.

NOTES:

1. FOOTING TO BE IN UN-DISTURBED NATIVE SOIL OR ON SUBGRADE COMPACTED TO 95% DENSITY.
2. CONCRETE TO BE CLASS S, 3000 PSI @28 DAYS
3. REBAR TO BE GRADE 60
4. SINEWAVE FORM LINER LAYOUT SEE DETAILS THIS SHEET. FOR EDGE TREATMENT AND OTHER INSTALLATION DETAILS SEE ARCHITECTURAL TREATMENT DETAILS IN BRIDGE PLANS

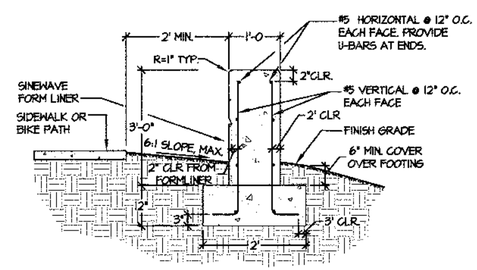

2 ENTRY WALL - SECTION A-A'

SCALE: N.T.S.

NOTES:

1. FOR SINEWAVE FORM LINER LAYOUT SEE DETAILS THIS SHEET. FOR EDGE TREATMENT AND OTHER INSTALLATION DETAILS SEE BRIDGE PLANS.
2. PAINT WALL WITH DUNN-EDWARDS COLOR EX54, FLEMISH BLUE OR APROVED EQUAL. SEE SPECIAL PROVISIONS.
3. FORMLINER AND PAINT TREATMENT TO EXTEND TO BASE OF FOOTING, TYPICAL.

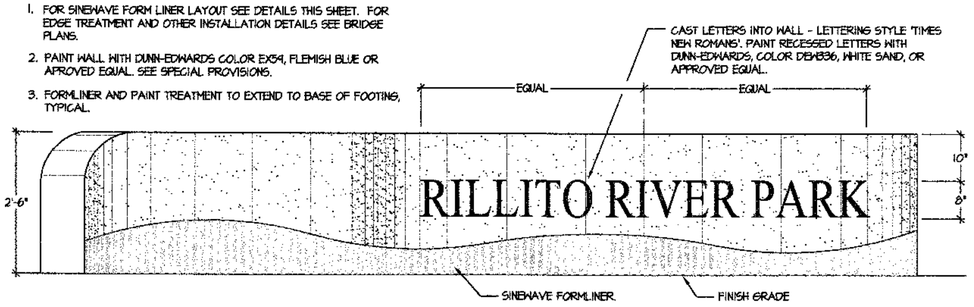

3 MONUMENT WALL ELEVATION

SCALE: 3/4" = 1'-0"

DET16

NOTE:
DIMENSIONS FOR FORMLINER FROM TOP OF FOOTING

CURVE RADIUS	
C1	8'-6"
C2	13'-0"
C3	13'-0"
C4	8'-0"

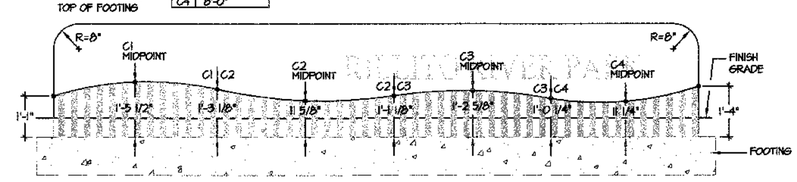

4 MONUMENT WALL - ORTHOGRAPHIC VIEW

SCALE: 1/2" = 1'-0"

WALL-ELEVATION-ORTHO

Two working days before you dig CALL FOR THE BLUE STAKES 1-800-782-5348 Blue Stake Center CALL COLLECT

Pima County Department of Transportation

No.	Revision Description	Engineer	Date

			Date
Designed	DDS		07/09
Drawn	PB		07/09
Checked	DKM		07/09
Proj. L.A.	DDS		07/09

Priscilla S. Cornelio, P.E., Director

REGISTERED LANDSCAPE ARCHITECT 48751 DARLENE D. SHOWALTER ARIZONA, U.S.A.
Expires 12/31/2011

McGann & Associates
Landscape Architects and Planners
6814 North Oracle Rd. Suite 210
Tucson, Arizona 85704
Telephone: (520) 297-9540 Fax: (520) 297-9545

LA CHOLLA BLVD.
RUTHRAUFF RD. TO RIVER RD.
ENTRY WALL DETAILS

Scales	1" = 20'	Sheet L34 of L35	Page 236 of 356

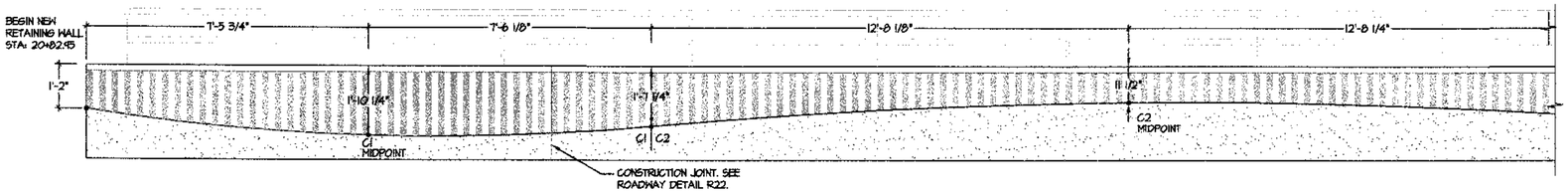

CURVE RADIUS	
C1	60'-0"
C2	155'-0"
C3	120'-0"
C4	311'-0"
C5	5'-0"

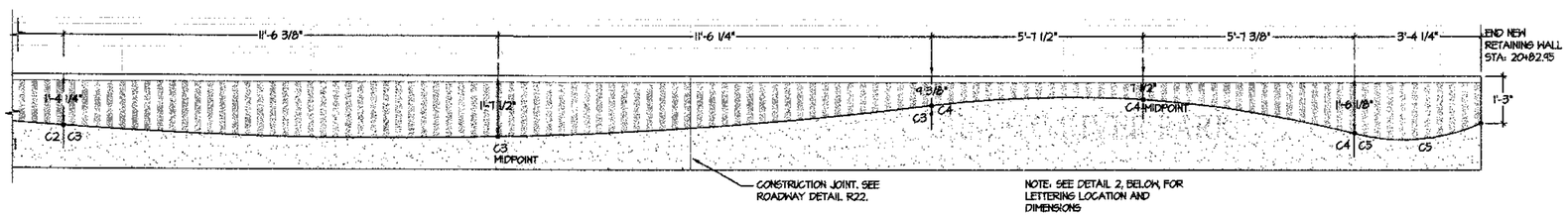

1 RETAINING WALL RUSTICATION DETAIL
SCALE: 1/2" = 1'-0"

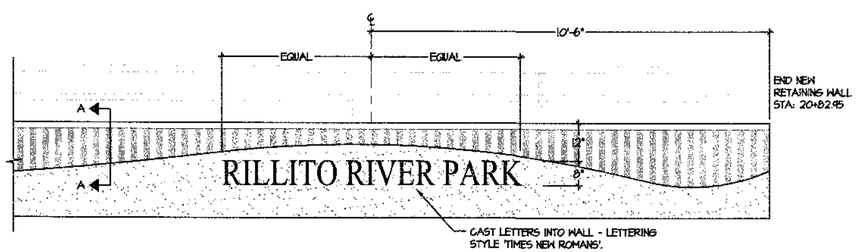

2 RETAINING WALL RUSTICATION DETAIL
SCALE: 1/2" = 1'-0"

RETAIN-WALL-ELEVATION

NOTES:
1. FOR SINEWAVE FORM LINER EDGE TREATMENT AND OTHER INSTALLATION DETAILS SEE BRIDGE PLANS.
2. PAINT WALL WITH DUNN-EDWARDS COLOR DX54, FLEMISH BLUE OR APROVED EQUAL. SEE SPECIAL PROVISIONS.
3. PAINT RECESSED LETTERS WITH DUNN-EDWARDS, COLOR DEH836, WHITE SAND, OR APPROVED EQUAL. SEE SPECIAL PROVISIONS.

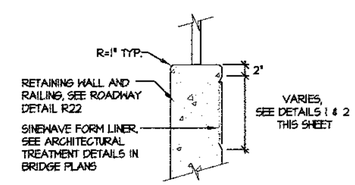

3 RETAINING WALL RUSTICATION - SECTION A-A'
SCALE: N.T.S.

Two working days before you dig CALL FOR THE BLUE STAKES
1-800-782-5348
Blue Stake Center CALL COLLECT

Priscilla S. Cornelio, P.E., Director

Designed	DDS	07/09
Drawn	PB	07/09
Checked	DKM	07/09
Proj. L.A.	DDS	07/09

No.	Revision Description	Engineer	Date

REGISTERED LANDSCAPE ARCHITECT
CERTIFICATE NO. 48751
DARLENE D. SHOWALTER
Date Signed 7-7-09
ARIZONA, U.S.A.
Expires 12/31/2011

McGann & Associates
Landscape Architects and Planners
6884 North Oracle Rd., Suite 210
Tucson, Arizona 85704
Telephone: (520) 297-9540 Fax: (520) 297-9543

Pima County Department of Transportation

LA CHOLLA BLVD.
RUTHRAUFF RD. TO RIVER RD.
RETAINING WALL
DETAILS

Scales	1" = 20'	Sheet L35 of L35	Page 237 of 356

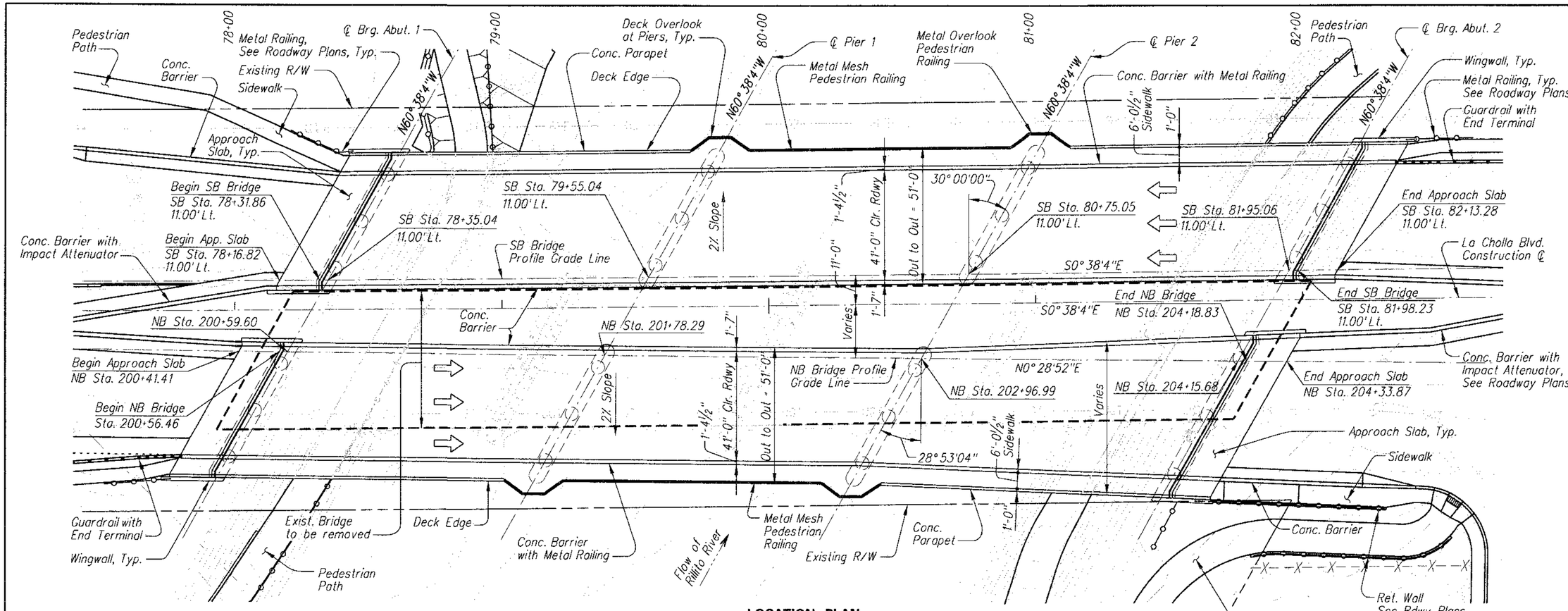

LOCATION PLAN

Scale 1"=20'-0"

Two New Three Span Precast Prestressed AASHTO Type V Modified Girder Bridges
SB Skew = 30° 00'00" w/ respect to SB BPGL
NB Skew = 28° 53'04" w/ respect to NB BPGL
Contour Interval = 1'-0"

INDEX OF BRIDGE SHEETS

See Sheet S3

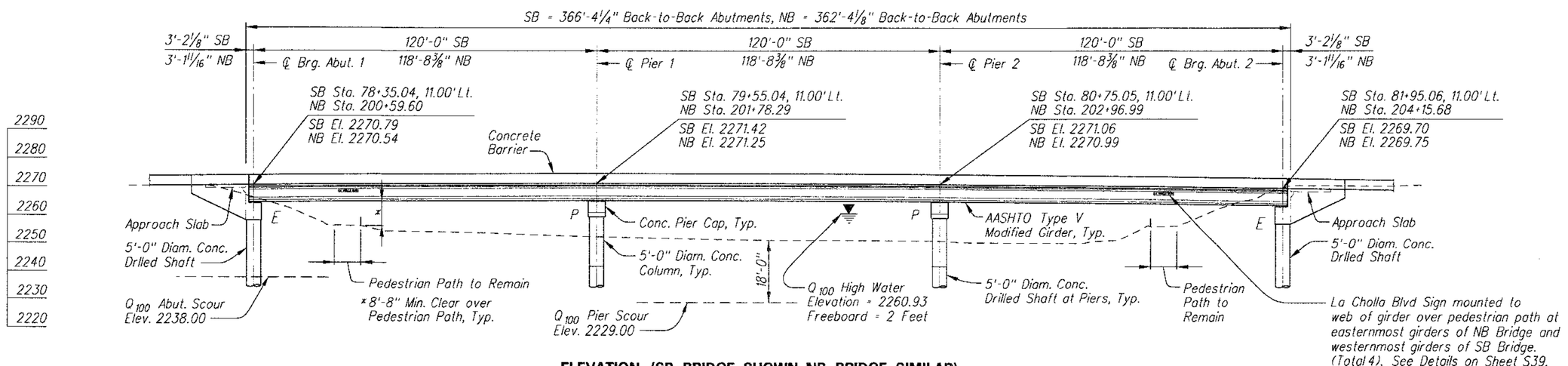

ELEVATION (SB BRIDGE SHOWN, NB BRIDGE SIMILAR)

Scale 1"=20'-0"

Stations are along the La Cholla Boulevard Construction Centerline for the SB Bridge and along the NB Bridge Profile Grade Line for the NB Bridge.
Dimensions and Elevations are along the SB or NB Bridge Profile Grade Line at top of Deck unless noted otherwise.

No.	Revision Description	Engineer	Date

		Date
Designed	ERM, SST	8/09
Drawn	YRK	8/09
Checked	TWB	8/09
Proj. Engr.	TWB	8/09

Priscilla S. Cornelio, P.E. Director

Registered Professional Engineer, Certificate No. 29368, Ted W. Buelt, Date Signed 8-28-09, Arizona U.S.A.
Expires 09-30-2010

HDR Engineering, Inc.
5210 East Williams Circle, Suite 530
Tucson, AZ 85711-4459
(520) 584-3600

Pima County Department of Transportation

LOCATION PLAN & ELEVATION
LA CHOLLA BOULEVARD BRIDGE
RUTHRAUFF RD. TO RIVER RD.
PROJECT NO. 4LCITR

Scales	Horiz. 1"= Vert. N/A	Sheet S1 of S58	Page 238 of 356

Date: 08\20\09

File: C:\PWworking\PHX\dms42758\20S-B01.dgn

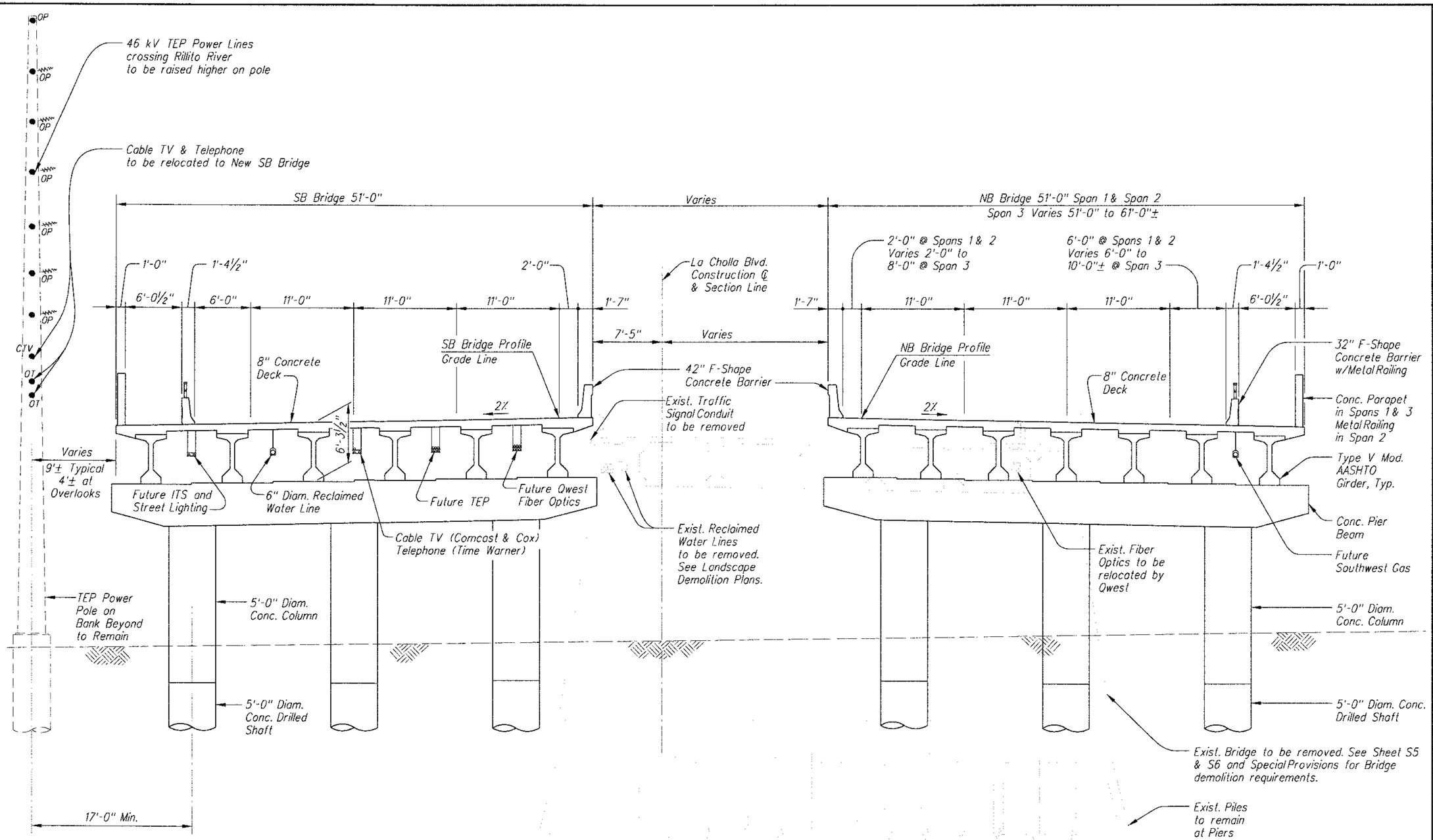

TYPICAL SECTION – NEW SOUTHBOUND & NORTHBOUND BRIDGE (1)

Scale 3/16" = 1'-0"

Note:

The northbound bridge deck cross-slope shown above is perpendicular to northbound bridge profile grade line.

Priscilla S. Cornelio, P.E. Director

Designed	ERM, SST	Date 8/09
Drawn	TRK	8/09
Checked	TWB	8/09
Proj. Engr.	TWB	8/09

No.	Revision Description	Engineer	Date

Registered Professional Engineer CERTIFICATE NO. 29368 TED W. BUELL Date Signed 8-20-09 ARIZONA U.S.A.

Expires 09-30-2010

HDR Engineering, Inc. 5210 East Williams Circle, Suite 530 Tucson, AZ 85711-4459 (520) 594-3600

Pima County Department of Transportation

TYPICAL SECTION
LA CHOLLA BOULEVARD BRIDGE
RUTHRAUFF RD. TO RIVER RD.
PROJECT NO. 4LCTR

Date: 08\20\09

File: C:\PWworking\PHX\dms42758\20S-B02.dgn

Scales	Horiz. 1"= / Vert. N/A	Sheet S2 of S58	Page 239 of 356

Approximate Quantities - Southbound Structure

Item	Class 'S' Concrete 3000 psi	Class 'S' Concrete 4000 psi	Class 'X' Concrete 4500 psi	Reinforcing Steel	AASHTO Type V Mod. Girders	Drilled Shaft 5'-0" Diam.		Concrete Pedestrian Parapet Item #6010660	Metal Mesh Pedestrian Railing Item #9330006	Metal Overlook Pedestrian Railing Item #9330007
	CU. YD.	CU. YD.	CU. YD.	LB	LIN. FT.	LF	NO.	LIN. FT.	LIN. FT.	LIN. FT.
Abutment 1	-	119	-	21,050	-	323	3	-	-	-
Pier 1	-	95	-	25,460	-	300	3	-	-	-
Pier 2	-	95	-	25,280	-	300	3	-	-	-
Abutment 2	-	123	-	21,050	-	318	3	-	-	-
Superstructure	-	-	732	179,590	2,152	-	-	223	98	49
Approach Slabs	56	-	-	11,990	-	-	-	33	-	-
Total	56	432	732	284,420	2,152	1241	12	256	98	49
As Built Total										

Deck Joint Assembly..... 114 LF
F-Shaped Barrier (32")..... 396 LF
F-Shaped Barrier (42")..... 396 LF
Metal Railing (on 32" F-Shape Barrier)..... 489 LF
Restrainers, Vertical Earthquake (Expansion)..... 10 EA
Restrainers, Vertical Earthquake (Fixed)..... 12 EA

Approximate Quantities - Northbound Structure

Item	Class 'S' Concrete 3000 psi	Class 'S' Concrete 4000 psi	Class 'X' Concrete 4500 psi	Reinforcing Steel	AASHTO Type V Mod. Girders	Drilled Shaft 5'-0" Diam.		Concrete Pedestrian Parapet Item #6010660	Metal Mesh Pedestrian Railing Item #9330006	Metal Overlook Pedestrian Railing Item #9330007
	CU. YD.	CU. YD.	CU. YD.	LB	LIN. FT.	LF	NO.	LIN. FT.	LIN. FT.	LIN. FT.
Abutment 1	-	120	-	21,125	-	321	3	-	-	-
Pier 1	-	95	-	25,480	-	330	3	-	-	-
Pier 2	-	95	-	25,415	-	330	3	-	-	-
Abutment 2	-	136	-	23,600	-	320	3	-	-	-
Superstructure	-	-	754	190,620	2,487	-	-	218	97	49
Approach Slabs	62	-	-	13,000	-	-	-	33	-	-
Total	62	446	754	299,240	2,487	1301	12	251	97	49
As Built Total										

Deck Joint Assembly..... 124 LF
F-Shaped Barrier (32")..... 393 LF
F-Shaped Barrier (42")..... 393 LF
Metal Railing (on 32" F-Shape Barrier)..... 444 LF
Restrainers, Vertical Earthquake (Expansion)..... 12 EA
Restrainers, Vertical Earthquake (Fixed)..... 14 EA

Note: Reinforcing steel quantities for drilled shafts are included in the lineal foot cost of the drilled shafts. Quantities for vertical earthquake restrainers are provided for information only. The cost of these items is considered incidental to other contract items. See Standard Specifications and Special Provisions.

INDEX OF BRIDGE SHEETS

DESCRIPTION	SHEET NO.	DESCRIPTION	SHEET NO.
Location Plan & Elevation	S1	Deck Plan	S29
Typical Section	S2	Precast Girder Details	S30 - S33
General Notes, Quantities & Index	S3	SB Deck Section	S34
Horizontal and Vertical Control	S4	NB Deck Section	S35
Construction Phasing	S5 - S7	Deck Overlook Details	S36
Foundation Data	S8 - S12	Deck Details	S37 - S38
Foundation Plan & Notes	S13	Miscellaneous Details	S39
Foundation & Column Details	S14	Utility Opening & Support Details	S40
SB Abutment 1 Plan & Elevation	S15	Southbound Screed Elevations	S41 - S42
SB Abutment 2 Plan & Elevation	S16	Northbound Screed Elevations	S43 - S44
NB Abutment 1 Plan & Elevation	S17	Ped. Rail & Conc. Barrier Key Plan	S45
NB Abutment 2 Plan & Elevation	S18	SB Ped. Parapet & Railing	S46
Abutment Details	S19 - S21	NB Ped. Parapet & Railing	S47
Abutment Diaphragm Details	S22	Conc. Barrier w/ Metal Railing	S48
SB Piers 1 & 2 Plan & Elevation	S23	Barrier & Railing Details	S49
NB Pier 1 Plan & Elevation	S24	Concrete Parapet Details	S50
NB Pier 2 Plan & Elevation	S25	Metal Mesh Railing Details	S51
Pier Details	S26	Metal Railing at Overlooks	S52 - S53
Pier Diaphragm Details	S27	Architectural Treatment Details	S54 - S58
Pier Details	S28	ADOT Standard Drawings	SD 1.01-1.03, SD 2.01, SD 3.02

General Notes, Continued

Existing Conditions

Contractor shall coordinate work to accommodate all existing conditions during construction of project. Utility information shown on the plans may not be complete or accurately depict the location of the facilities shown. The Contractor shall coordinate the location of all existing, new, relocated and abandoned utilities with the project plans and notify respective owners before commencing the work of excavation, including any drilling or piling required for temporary shoring. Conflicts shall be brought to the attention of the Engineer and resolved prior to proceeding with the work. See roadway and utility drawings for additional information.

Existing Bridge

Existing Bridge - The Contractor shall completely remove the existing bridge as shown on the plans and in accordance with the Special Provisions and Section 202 of the Standard Specifications. The existing bridge, Structure No. 8636, was built in 1981, Pima County Work Order No. 4-BLARI.

Inventory and Operating Rating

Ratings for HS20-44 are in accordance with AASHTO Manual for Condition Evaluation of Bridges 2nd Edition of 1994 with interim revisions through 2000, in accordance with Load Factor Method.

Inventory Rating HS 28.5 Southbound; HS 28.0 Northbound
Operating Rating HS 61.1 Southbound; HS 62.3 Northbound

LEGEND

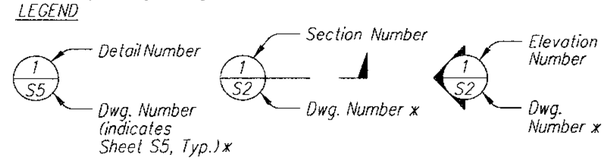

* "-" indicates Section or Detail is located on same drawing.

General Notes

Construction Specifications

Pima County/City of Tucson Standard Specifications for Public Improvements 2003 Edition, revised to date, and The Special Provisions.

Design Specifications

AASHTO Standard Specifications for Highway Bridges, 17 Edition 2002.

Bridge Loading

Dead Load - Dead Load includes allowance of 25 pounds per square foot (psf) for future wearing surface.
Loading Class - AASHTO HS20-44.
Seismic Performance Category "A", acceleration coefficient A = 0.05.
Hydraulic Design Criteria:

Q_{100}=32,000 CFS (Design Flood)
High Water Elevation=2260.93, V=9.96 ft/sec, Flow Depth=13.93 ft
Pier Scour=18 ft; Abutment Scour=9 ft

Q_{500}=62,000 CFS (Super Flood)
High Water Elevation=2268.05, V=11.58 ft/sec, Flow Depth=21.05 ft
Pier Scour=29 ft; Abutment Scour=23 ft

Concrete

All concrete shall be Class "S" unless noted otherwise.
Construction joints shall be permitted only at indicated locations. Additional construction joints or changes to those shown shall be approved by the Engineer. Sandblast all construction joints prior to placement of adjacent concrete.
Chamfer all exposed corners ¾" per ADOT Std B19.10, u.n.o.

Reinforcing Steel

Reinforcing steel shall conform to ASTM Specification A615. All reinforcing steel shall be furnished as Grade 60.
All bend dimensions for reinforcing steel shall be out-to-out of bars.
All placement dimensions for reinforcing steel shall be to center of bars, unless noted otherwise.
All reinforcing steel shall have 2" clear cover, unless noted otherwise.
All bends and hooks shall meet the requirements of AASHTO Article 8.23.

Structural Steel

Structural steel shall conform to ASTM A36 unless noted otherwise.
Structural tubing shall conform to ASTM A-500, Grade B. All welding shall conform to American Welding Society, ANSI/AASHTO/AWS D1.5-2008 Bridge Welding Code.

Girders

Precast prestressed AASHTO Type V Modified girders. Design is composite for live load and superimposed dead load only. Girders designed using transformed section properties.

Stresses

Deck Slab & Diaphragm (Class X)	f'c =	4500 psi (fc=1400 psi)
Abutments, Piers, Parapets, & Barriers (Class S)	f'c =	4000 psi
Drilled Shafts (Class S)	f'c =	4000 psi
All other Class "S" Concrete	f'c =	3000 psi
Grade 60 reinforcing	fs =	24,000 psi (fs = 20,000 psi for transv. deck reinf.)
Prestressing steel	f's =	270,000 psi (0.6" diameter 7-wire low relaxation strand)

Foundations

Foundations shall be constructed in accordance with the construction specifications and project special provisions. Foundations were designed in accordance with the final geotechnical report by NCS Consultants dated September 15, 2008. Pima County accepts no responsibility for any conditions encountered which vary from information provided.

Dimensions

Dimensions shall not be scaled from drawings.

Deck Formwork

Stay-in-Place formwork shall not be used.

Concrete Barriers & Parapets

Concrete bridge barriers and pedestrian parapets shall be constructed after deck slab falsework has been removed. Bridge barriers shall not be slip formed.

ADOT Standard Drawings

Structures Section Standards, 1992 Edition: B-19.10
Bridge Group SD Drawings: SD 1.01, SD 1.02, SD 1.03 SD 2.01, SD 3.02

Priscilla S. Cornelio, P.E. Director

No.	Revision Description	Engineer	Date

		Date
Designed	ERM, SST	8/09
Drawn	TRK	8/09
Checked	TWG	8/09
Proj. Engr.	TWG	8/09

Registered Professional Engineer (Civil) CERTIFICATE NO. 29368 TED W. BUELL Date Signed 8-3-09 ARIZONA U.S.A.
Expires 09-30-2010

HDR Engineering, Inc.
5210 East Williams Circle, Suite 530
Tucson, AZ 85711-4459
(520) 584-3600

Pima County Department of Transportation

GENERAL NOTES, QUANTITIES & INDEX
LA CHOLLA BOULEVARD BRIDGE
RUTHRAUFF RD. TO RIVER RD.
PROJECT NO. 4LCITR

Scales	Horiz. 1"= / Vert. N/A	Sheet S3 of S58	Page 240 of 356

Date: 08\21\09

File: C:\PWworking\PHX\dms42758\20S-B03.dgn

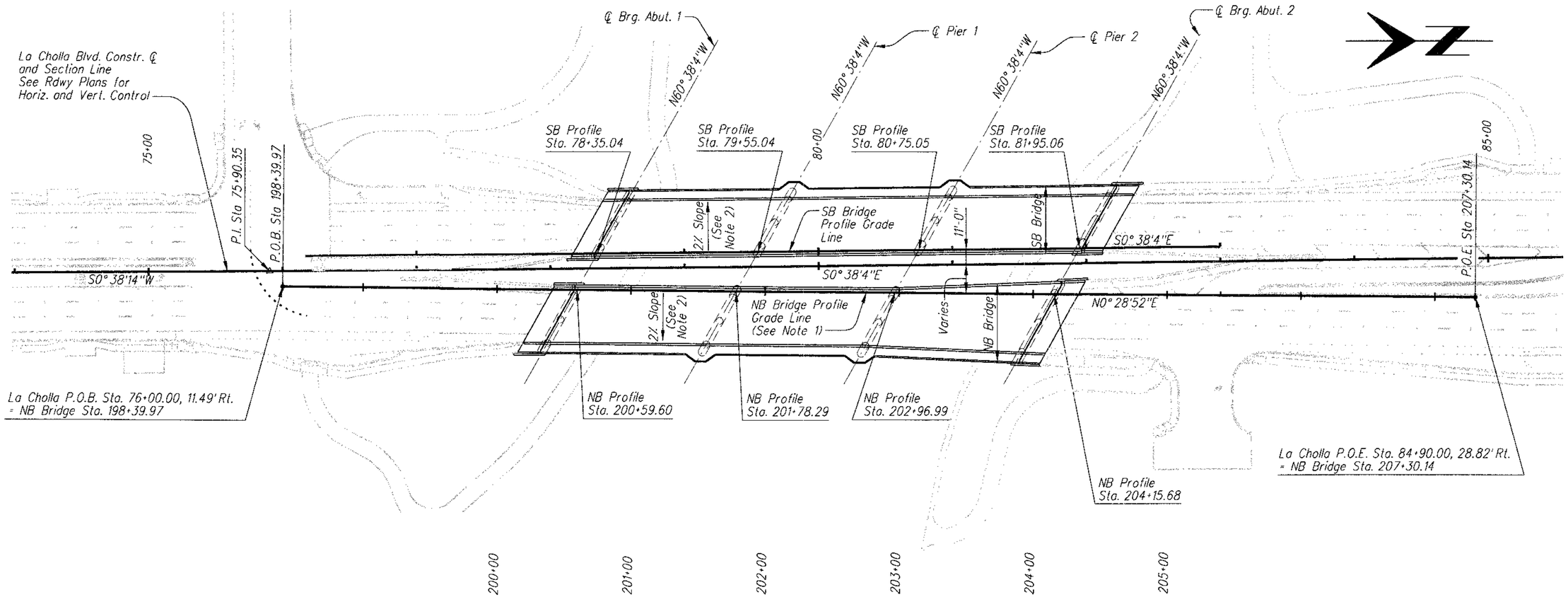

HORIZONTAL CONTROL – SB & NB BRIDGE

No Scale

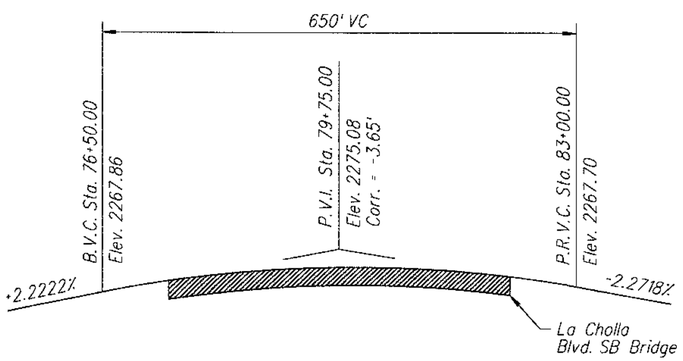

SB BRIDGE PROFILE GRADE LINE

(11.00' Lt. of La Cholla Blvd. Constr. ℄)
No Scale

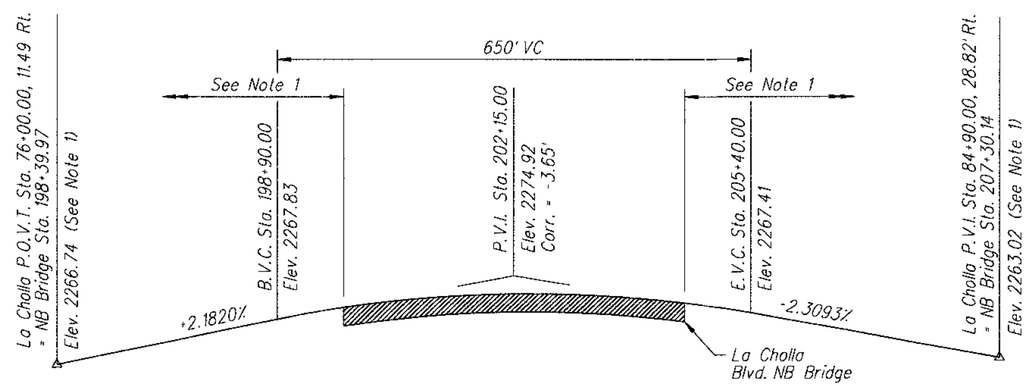

NB BRIDGE PROFILE GRADE LINE

(Distance varies Rt. of La Cholla Blvd. Constr. ℄)
No Scale

Notes:

1. The Northbound Bridge Profile Grade Line shall be used for horizontal and vertical control of the northbound bridge and approch slabs only. Profile information outside of the approach slabs shall be based on the La Cholla Boulevard Construction Centerline and Profile Grade Vertical Control Line as shown in the Roadway Plans.
2. The 2% bridge deck cross-slope shall be perpendicular to the respective bridge profile grade lines.

Pima County Department of Transportation

Priscilla S. Cornelio, P.E. Director

No.	Revision Description	Engineer	Date

		Date
Designed	FRM, SST	8/09
Drawn	TRK	8/09
Checked	TWB	8/09
Proj. Eng.	TWB	8/09

Registered Professional Engineer (Civil) CERTIFICATE NO. 29368 TED W. BUELL Date Signed 8-3-09 ARIZONA U.S.A.

Expires 09-30-2010

HDR

HDR Engineering, Inc.
5210 East Williams Circle, Suite 530
Tucson, AZ 85711-4459
(520) 584-3600

HORIZONTAL & VERTICAL CONTROL
LA CHOLLA BOULEVARD BRIDGE
RUTHRAUFF RD. TO RIVER RD.
PROJECT NO. 4LCTR

Scales	Horiz. 1"=	Sheet	54 of 558	Page	241 of 356
	Vert. N/A				

Date: 08\20\09

File: C:\PWworking\PHX\dms42758\20S-B04.dgn

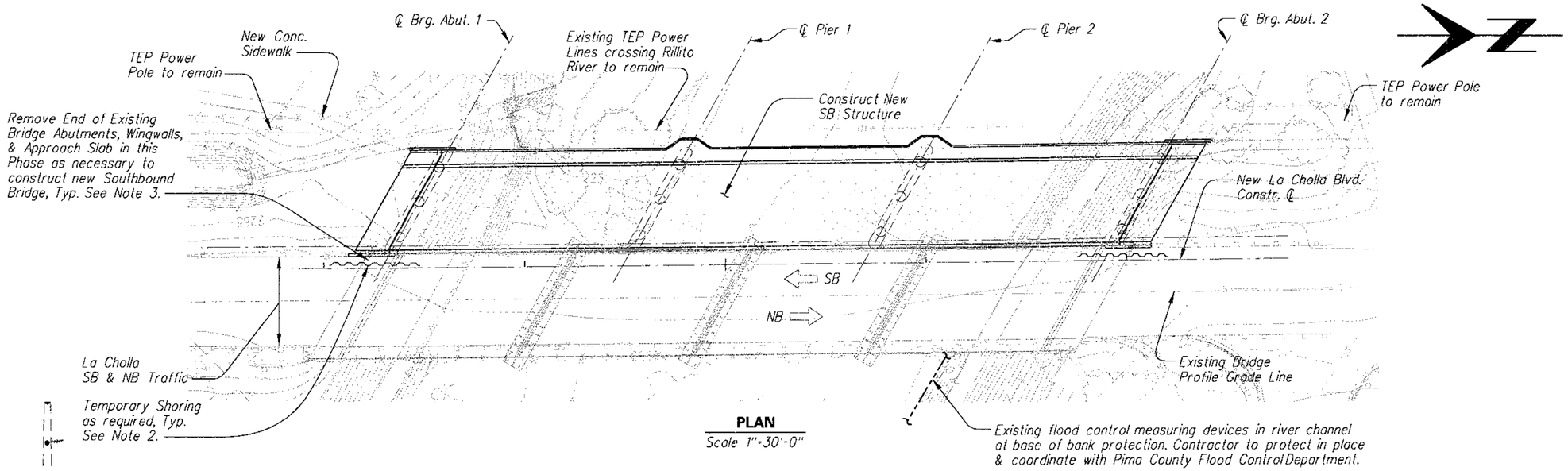

PLAN
Scale 1"=30'-0"

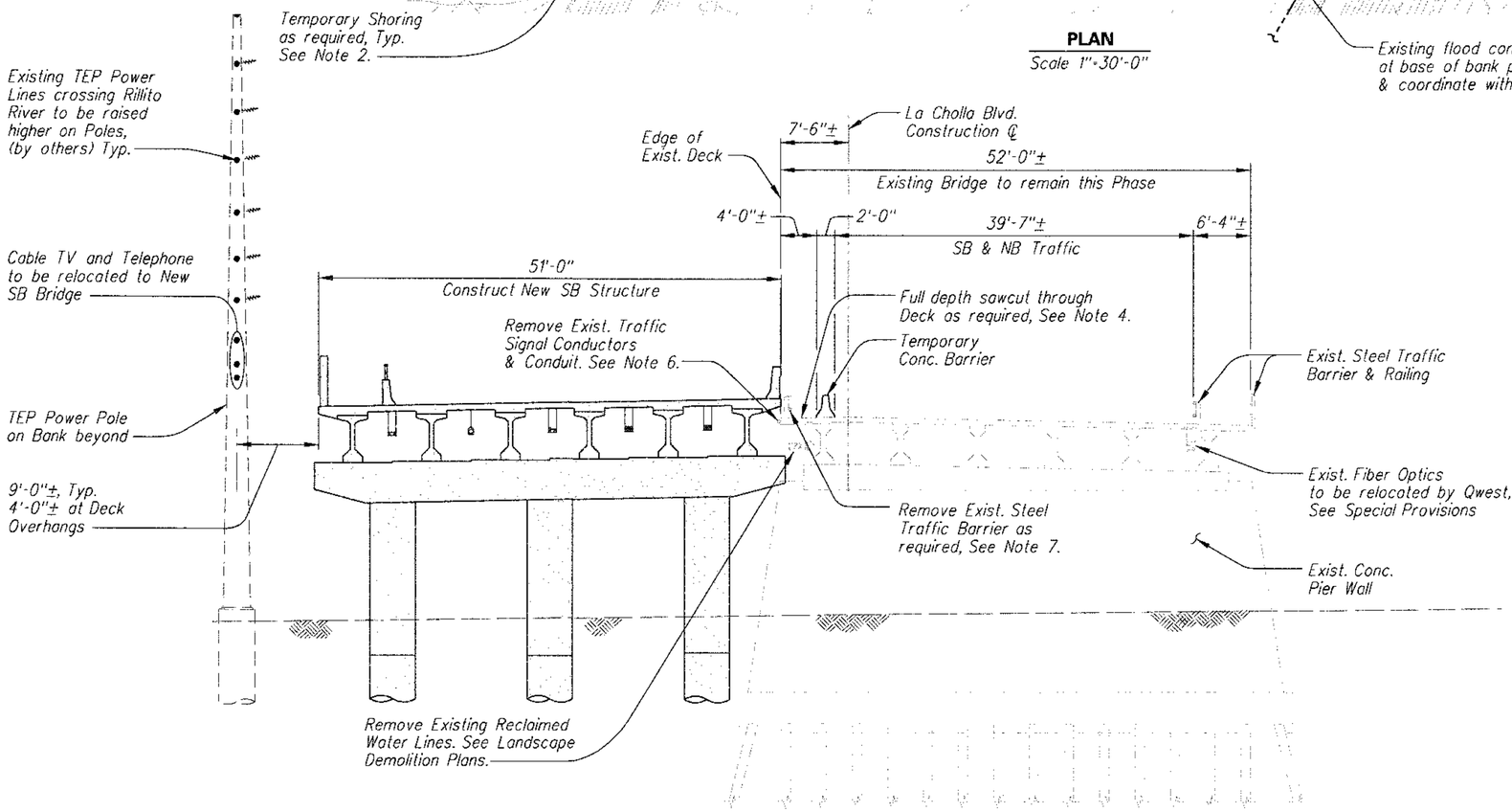

TYPICAL SECTION – PIER
Scale 1/8"=1'-0"

PHASE 1 – CONSTRUCT NEW SOUTHBOUND STRUCTURE (1)

Notes:

1. Two lanes of traffic (1 NB and 1 SB) shall be maintained on La Cholla Boulevard at all times during construction. See Special Provisions.
2. Contractor shall be responsible for providing Temporary Shoring as required to safely construct the new bridges while maintaining traffic on existing bridge.
3. The Contractor shall submit a demolition plan to the Engineer for review and approval prior to removal of any portion of the existing bridge.
4. At Contractor's option, a portion of the existing bridge deck may be sawcut and removed in order to provide clearance between the new SB Bridge and the existing bridge. A minimum distance of 2'-0" shall be maintained between the edge of existing bridge deck and the back of the temporary concrete barrier.
5. The use of the existing bridge is not recommended for construction activities such as girder erection. If such activities are required, the Contractor shall notify PCDOT and provide a structural analysis of the bridge under equipment loading. The analysis shall be prepared and sealed by a licensed Civil or Structural Engineer licensed in the State of Arizona. See Special Provisions.
6. Contractor shall coordinate with PCDOT Traffic Engineering for disconnection of signal conduit. Contractor shall not disconnect or remove conduit until the temporary traffic signal at Curtis Road is operational.
7. The steel railing and traffic barrier on the existing bridge shall not be disposed of in a landfill but shall be transported to an approved recycling center. See Special Provisions.
8. Partial removal of existing bridge as required to construct southbound bridge including sawcutting is paid for under Item 2020002. The cost of shoring is considered incidental to other contract items.

No.	Revision Description	Engineer	Date

Designed	FRM, SST	Date 8/09
Drawn	TRK	8/09
Checked	TWB	8/09
Proj. Engr.	TWB	8/09

Priscilla S. Cornelio, P.E. Director

Registered Professional Engineer (Civil) Certificate No. 29368 Ted W. Buelna Date Signed 2-25-09 Arizona U.S.A.
Expires 09-30-2010

HDR
HDR Engineering, Inc.
3210 East Williams Circle, Suite 530
Tucson, AZ 85711-4459
(520) 584-3600

Pima County Department of Transportation

CONSTRUCTION PHASING (1 OF 3)
LA CHOLLA BOULEVARD BRIDGE
RUTHRAUFF RD. TO RIVER RD.
PROJECT NO. 4LCITR

Scales	Horiz. 1"= Vert. N/A	Sheet S5 of S58	Page 242 of 356

Date: 08\20\09

File: C:\PWworking\PHX\dms42758\20S-B05.dgn

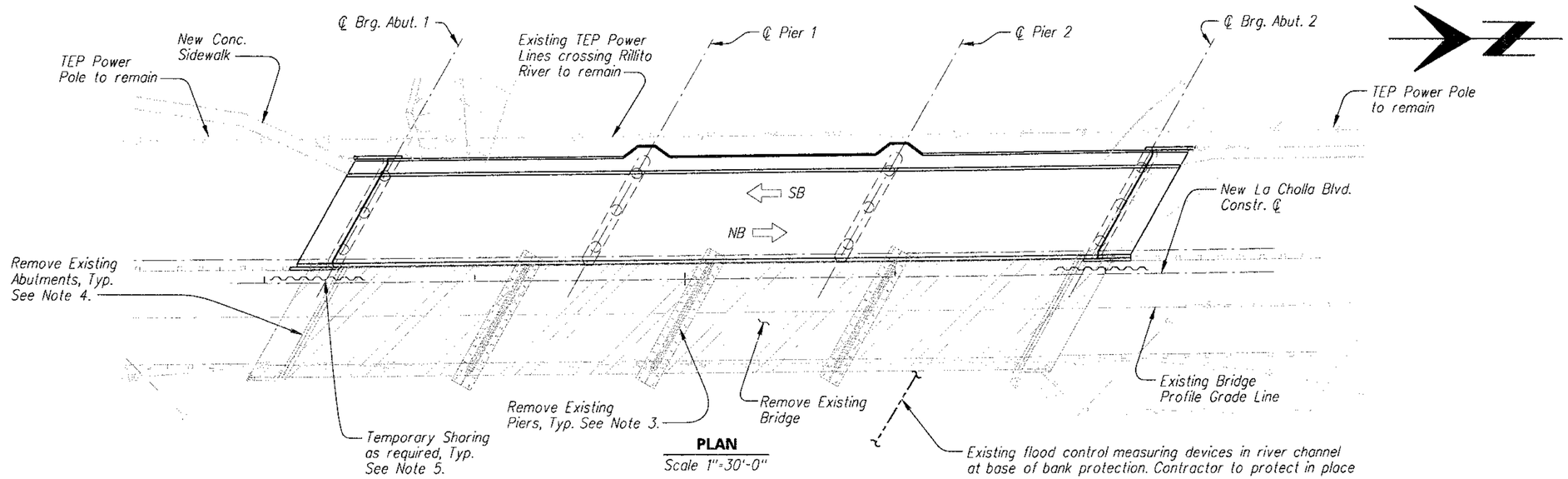

PLAN
Scale 1"=30'-0"

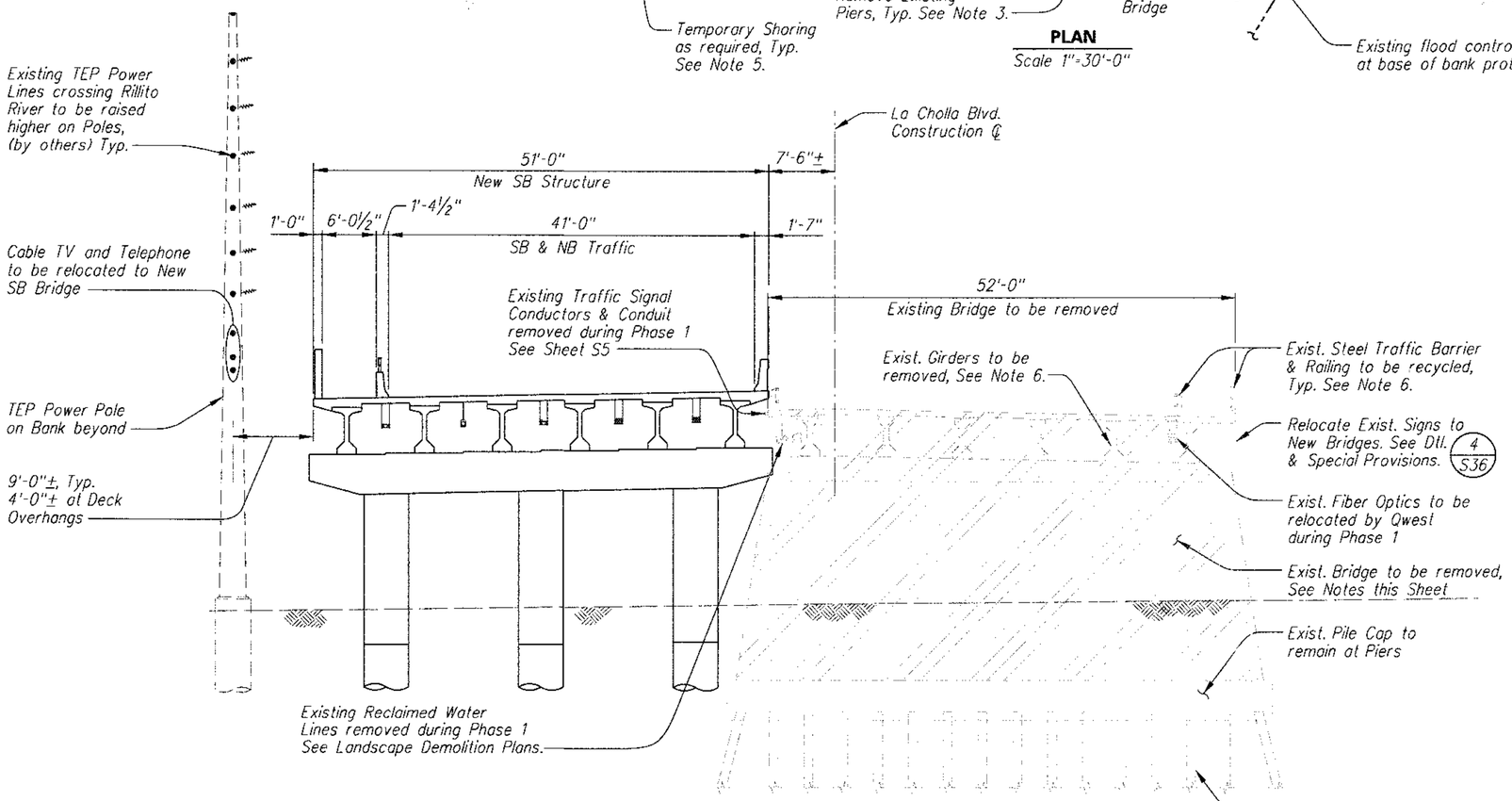

TYPICAL SECTION – PIER
Scale 1/8"=1'-0"

PHASE 2 – REMOVE EXISTING STRUCTURE (1)

Notes:

1. Two lanes of traffic (1 NB and 1 SB) shall be maintained on La Cholla Boulevard at all times during construction. See Special Provisions.
2. The Contractor shall submit a demolition plan to the Engineer for review and approval prior to removal of any portion of the existing bridge.
3. Existing pier walls to be removed to top of pile cap, minimum.
4. Existing pile caps and piles supporting the abutments shall be removed to 5'-0" minimum below the pile cap or to 5'-0" minimum below finished grade, whichever is deeper, unless noted otherwise.
5. Contractor shall be responsible for providing Temporary Shoring as required.
6. The Contractor shall follow OSHA 1926 Safety and Health Regulations for Construction for potential lead exposure during the demolition of the metal rails and concrete girders and walls since testing indicated the presence of lead in the paint. All scrap metal from the bridge that has been painted should be treated as if the paint contains lead. Therefore, in lieu of disposing the metal in a landfill, the Contractor shall transport it to a recycling facility approved by the County. See Special Provisions.
7. Removal of the existing bridge shall not occur during the swallow breeding season. See Special Provisions.
8. Removal of existing bridge is paid for under Item 2020002. The cost of shoring is considered incidental to other contract items.

Priscilla S. Cornelio, P.E. Director

No.	Revision Description	Engineer	Date

		Date
Designed	FRM, SST	8/09
Drawn	TRK	8/09
Checked	TWB	8/09
Proj. Engr.	TWB	8/09

Registered Professional Engineer CERTIFICATE NO. 29368 TED W. BUELL ARIZONA U.S.A.
Expires 09-30-2010

HDR Engineering, Inc.
5210 East Williams Circle, Suite 530
Tucson, AZ 85711-4459
(520) 584-5500

Pima County Department of Transportation

CONSTRUCTION PHASING (2 OF 3)
LA CHOLLA BOULEVARD BRIDGE
RUTHRAUFF RD. TO RIVER RD.
PROJECT NO. 4LCITR

Scales	Horiz. 1"= Vert. N/A	Sheet S6 of S58	Page 243 of 356

Date: 08\21\09

File: C:\PWworking\PHX\dms42758\20S-B06.dgn

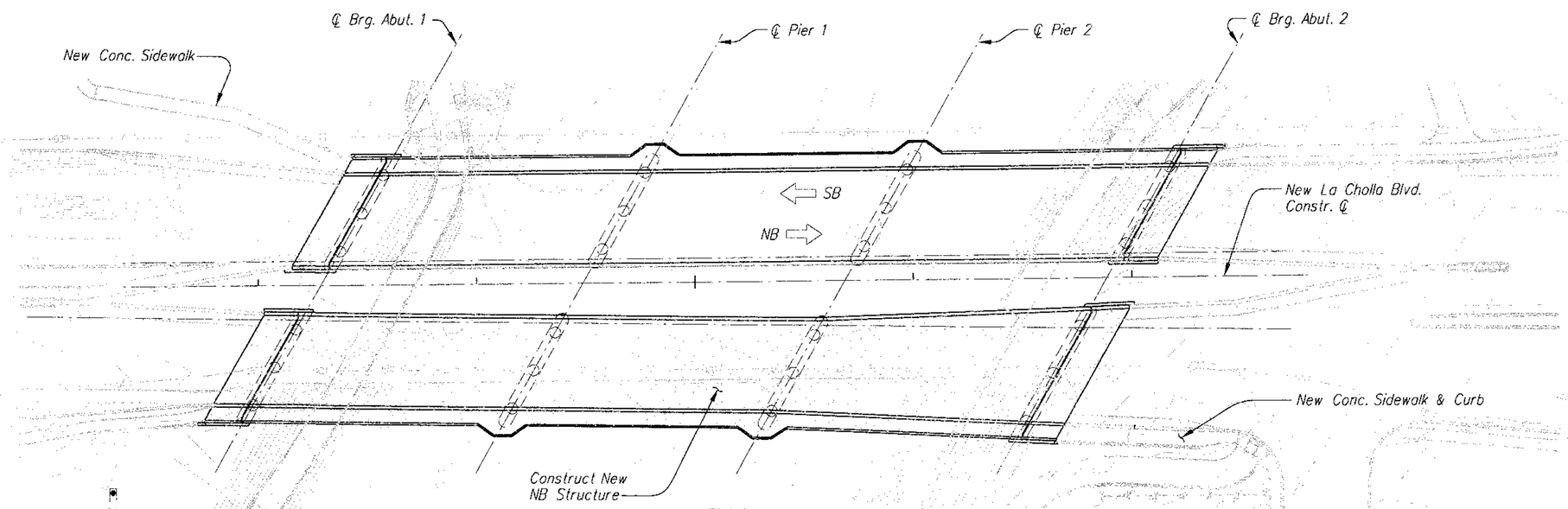

PLAN
Scale 1"=30'-0"

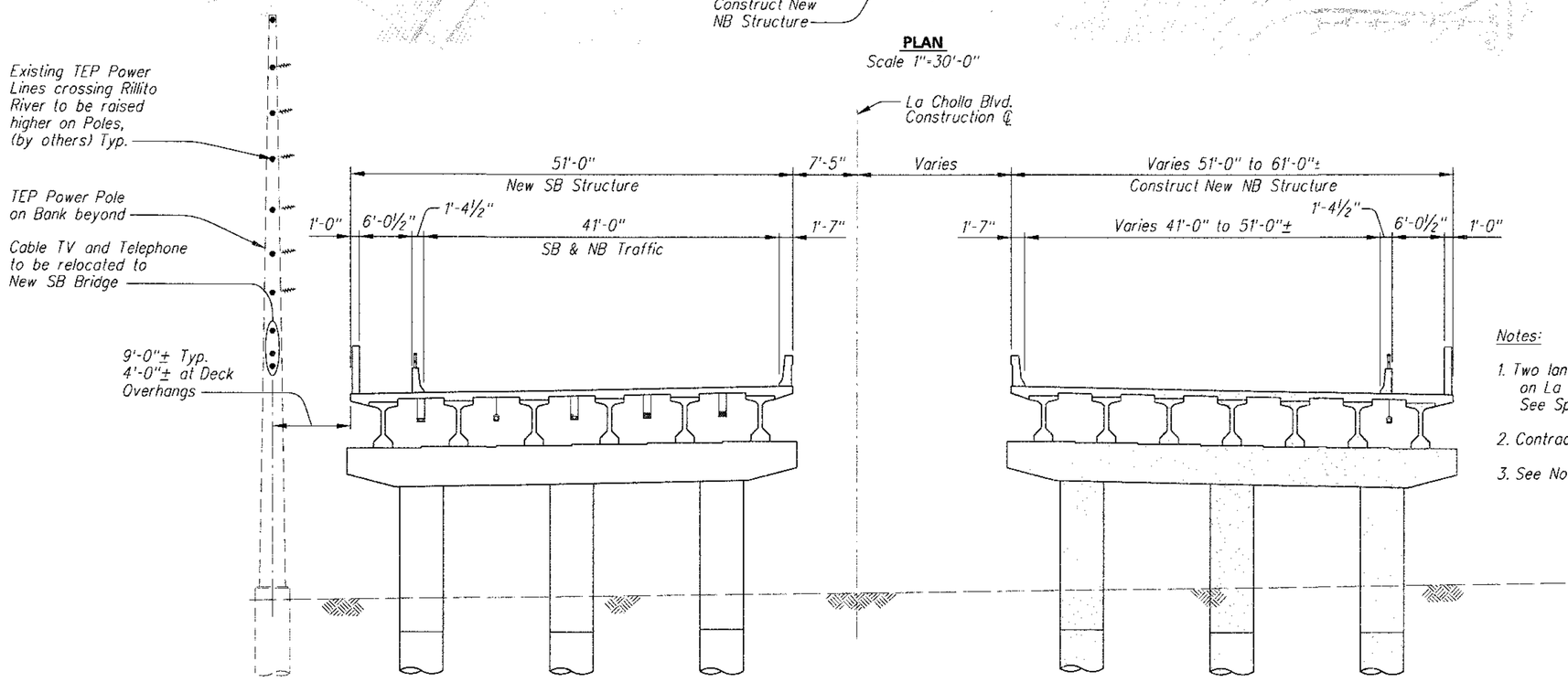

TYPICAL SECTION - PIER
Scale ⅛"=1'-0"

Notes:

1. Two lanes of traffic (1 NB and 1 SB) shall be maintained on La Chola Boulevard at all times during construction. See Special Provisions.
2. Contractor shall remove Temporary Shoring.
3. See Notes on Sheet S5 and S6 for additional information.

PHASE 3 - CONSTRUCT NORTHBOUND STRUCTURE (1)

No.	Revision Description	Engineer	Date

		Date
Designed	ERM, SST	8/09
Drawn	TRK	8/09
Checked	TWB	8/09
Proj. Engr.	TWB	8/09

Priscilla S. Cornelio, P.E. Director

Registered Professional Engineer, Certificate No. 29368, Ted W. Buell, Arizona U.S.A.
Expires 09-30-2010

HDR Engineering, Inc.
5230 East Williams Circle, Suite 530
Tucson, AZ 85711-4459
(520) 584-3600

Pima County Department of Transportation

CONSTRUCTION PHASING (3 OF 3)
LA CHOLLA BOULEVARD BRIDGE
RUTHRAUFF RD. TO RIVER RD.
PROJECT NO. 4LCITR

Scales	Horiz. 1"= / Vert. N/A	Sheet S7 of S58	Page 244 of 356

Date: 08\21\09

File: C:\PWworking\PHX\dms42758\20S-B07.dgn

GENERAL NOTES

1. General soil and rock (where encountered) strata descriptions and indicated boundaries are based on engineering interpretation of available subsurface information by the geotechnical engineer and may not reflect actual variation in subsurface conditions between borings and samples. The location of contacts between strata may be gradual rather than abrupt. Classification of soil material is in general accordance with ASTM D 2488-93 and is presented in the Geotechnical Report.

2. The observed water levels and/or moisture conditions indicated on the boring logs are as recorded at the time of field investigation. These water levels and/or moisture conditions may vary considerably with time according to the prevailing climate, rainfall or other factors and are otherwise dependent upon the duration of and methods used in the field investigation program.

3. Sound engineering judgment was exercised in preparing the subsurface information presented on these sheets. This information was prepared and is intended for design and estimating purposes. Its presentation on the plans or elsewhere is for the purpose of providing intended users with access to the same information as was provided to the County and its designers. Interpretations of subsurface information are presented in good faith and are not intended as a substitute for personal investigation, independent interpretations or judgment of the contractor.

4. A 140 lb. hammer, 30-inch free-fall, was used to drive both the Standard Penetration Test (SPT) split-spoon sampler and the ring-lined sampler in general conformance with ASTM D 1586-96 and D 3550-01, respectively.

5. For further information, refer to NCS reports "Final Geotechnical Report (La Cholla Blvd widening - Ruthrauff to River Road)"

6. Reaction to dilute HCl (as per ASTM D 2488) does not necessarily correlate to the degree of carbonate cementation. For example, a "strong" reaction to HCl and a low SPT-N value may indicate that the soil particles are coated with calcium carbonate or lime but the voids are mostly clear, i.e. the particles are not significantly cemented to each other; therefore, the density is loose. In other cases, soil may exhibit "no" to "weak" reaction to HCl but appear to be strongly cemented due to induration. Thus, the user should consider the reported reaction to HCl and SPT-N values in conjunction with other relevant factors to evaluate the degree of cementation and its effect on construction activities.

7. Refusal SPT-N values may be indicative of the presence of cobbles or boulders whose size cannot be determined by the investigative techniques used for this project. Cobbles and boulders will likely be encountered during the construction of the drilled shafts. Additionally, cemented layers may form cobble or boulder size pieces when broken up. The contractor should mobilize the appropriate equipment for removing this material.

8. The site soils contain random zones of poorly graded sands and gravels. These soils are prone to caving. Therefore, localized caving should be anticipated during drilled shaft construction. These local zones may be up to 10-ft thick and can occur at various depths.

9. The site soils contain random zones of gravels, cobbles and boulders. These materials experience large fluid loss during slurry-assisted drilled shaft construction.

BORING PLAN

SCALE 1"=50'

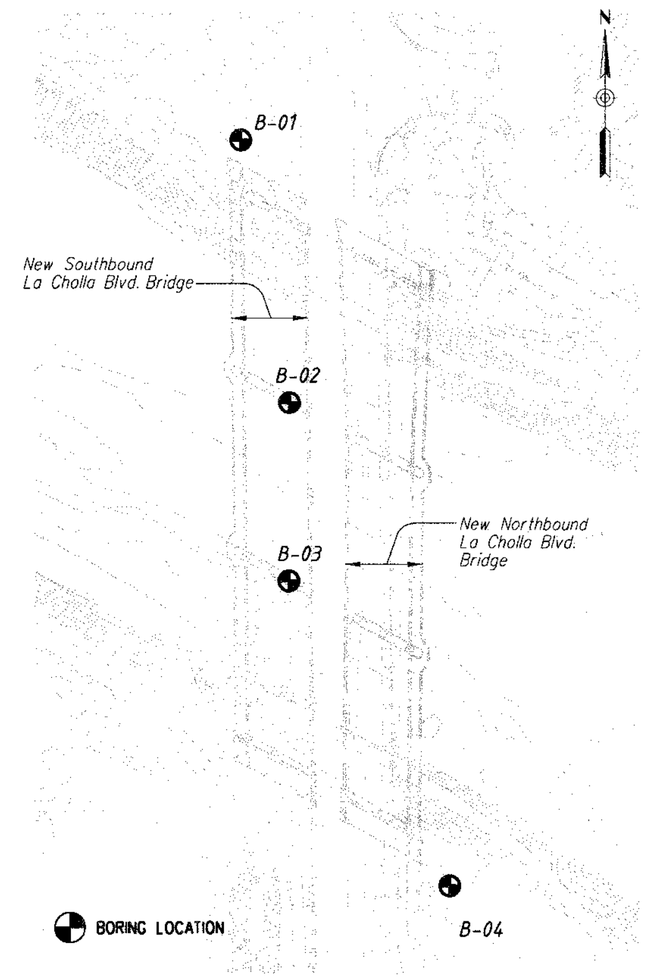

OTHER TERMINOLOGY

Quantity:	
Trace	5%
Few	5-10%
Little	15-25%
Some	30-45%
Mostly	50%

Reaction to HCl:	
No reaction	No visible reaction
Weak reaction	Some reaction, with bubbles forming slowly
Strong reaction	Violent reaction, with bubbles forming immediately

CALL TWO WORKING DAYS BEFORE YOU DIG
602-263-1100
1-800-STAKE-IT
(OUTSIDE MARICOPA COUNTY)

Priscilla S. Cornelio, P.E., Director

Designed	WJF	8/09
Drawn	TLC	8/09
Checked	NCS	8/09
Proj. Eng.	WJF	8/09

No.	Revision Description	Engineer	Date

REGISTERED PROFESSIONAL ENGINEER (CIVIL) CERTIFICATE NO. 32901 N. C. SAFTAR DATE SIGNED 8-14-09 ARIZONA, U.S.A.
Expires 09-30-2010

NCS CONSULTANTS, LLC
640 W PASEO RIO GRANDE
TUCSON, AZ 85737
520-544-2786

Pima County Department of Transportation

FOUNDATION DATA
LA CHOLLA BOULEVARD BRIDGE
RUTHRAUFF RD. TO RIVER RD.
PROJECT NO. 4LCTR

Scales	Horiz. 1"=50'	Sheet S8 of S58	Page 245 of 356

DATE: 08\13\09 10:25:55 AM

FILE: C:\PWWORKING\PHX\DMS42758\20S-B07.DGN

NCS BORING LOG: B-01 (1 of 2)

NORTHING: 475,305 EASTING: 979,550
ELEV.: 2,266.0 TOTAL DEPTH: 151.4

STARTED: 04/15/2008 10:30 AM
FINISHED: 04/16/2008 01:30 PM

CONTRACTOR: GSI
DRILLER: Chuck
INSPECTOR: WUF
RIG TYPE: truck mtd. CME 75
DRILLING METHOD: 8" O.D. HSA
HAMMER TYPE: Auto Hammer
NCS PROJECT #: J2007-09

SAMPLER TYPES	Type	Symbol	Description	I.D.	O.D.	Length
	S		Split Spoon	1.375"	2"	18"
	R		Ring Sampler	2.5"	3"	18"
	S2		Split Spoon	0.87"	1.5"	18"

DEPTH (FT)	ELEV. (FT)	GRAPHIC	SAMPLE TYPE	SAMPLE SYMBOL	BLOWS	VISUAL SOIL IDENTIFICATION / DESCRIPTION AND REMARKS
	2265					SILTY SAND, very dense, dry, brown, fine to coarse SAND, little nonplastic fines, few fine gravel, no cementation, strong reaction with HCl. (SM)
5	2260		S		18-28-33	
10	2255		S		9-10-12	WELL-GRADED SAND, medium dense, dry, brown, fine to coarse SAND, few fine to coarse gravel, trace nonplastic fines, no cementation, no reaction with HCl, max. particle size 1". (SW)
15	2250		S		4-5-6	CLAYEY SAND, medium dense, dry, brown, fine to coarse SAND, little medium plastic fines, little fine gravel, no cementation, no reaction with HCl. (SC)
20	2245		S		10-13-18	WELL-GRADED SAND WITH SILT, dense, dry, light brown, fine to coarse SAND, few fine to coarse gravel, few nonplastic fines, no cementation, no reaction with HCl. (SW-SM)
25	2240		S		11-17-22	WELL-GRADED SAND WITH CLAY, dense, dry, brown, fine to coarse SAND, few fine to coarse gravel, few low plastic fines, no cementation, no reaction with HCl, max. particle size 0.75". (SW-SC)
30	2235		S		11-16-19	
35	2230		S		32-36-24	Becomes very dense. 1.5" rock in sampler.
40	2225		S		11-35-22	
45	2220		S		21-14-15	CLAYEY SAND WITH GRAVEL, medium dense, moist, brown, fine to coarse SAND, little low plastic fines, little fine to coarse gravel, no cementation, no reaction with HCl, max. particle size 1". (SC)
50	2215		S		10-10-15	
55	2210		S		4-9-17	SILTY, CLAYEY SAND, very stiff, wet, brown, fine to medium SAND, some low plastic fines, no cementation, no reaction with HCl. (CL-ML) Groundwater encountered @ 55'.
60	2205		S		5-8-10	SANDY LEAN CLAY, very stiff, moist, brown, medium plastic CLAY, some fine to medium sand, no cementation, no reaction with HCl. (CL)
65	2200		S		6-10-9	
70	2195		R		22-50/4"	Becomes hard.
75	2190		S		8-12-14	Becomes very stiff.
80	2185		S		8-13-23	Becomes LEAN CLAY WITH SAND, hard, little fine to coarse sand.
85	2180		S		3-2-5	CLAYEY SAND, loose, wet, brown, fine to coarse SAND, little low plastic fines, no cementation, no reaction with HCl. (SC)
90	2175		S		5-8-14	LEAN CLAY WITH SAND, very stiff, moist, brown, low plastic CLAY, little fine to coarse sand, no cementation, no reaction with HCl. (CL)
95	2170		S		10-15-28	Becomes hard.
100	2165		R		11-20	
105	2160		S		12-15-17	
110						CLAYEY SAND, very dense, moist, brown, fine to coarse SAND, some

NCS BORING LOG: B-01 (2 of 2)

NORTHING: 475,305 EASTING: 979,550
ELEV.: 2,266.0 TOTAL DEPTH: 151.4

STARTED: 04/15/2008 10:30 AM
FINISHED: 04/16/2008 01:30 PM

CONTRACTOR: GSI
DRILLER: Chuck
INSPECTOR: WUF
RIG TYPE: truck mtd. CME 75
DRILLING METHOD: 8" O.D. HSA
HAMMER TYPE: Auto Hammer
NCS PROJECT #: J2007-09

SAMPLER TYPES	Type	Symbol	Description	I.D.	O.D.	Length
	S		Split Spoon	1.375"	2"	18"
	R		Ring Sampler	2.5"	3"	18"
	S2		Split Spoon	0.87"	1.5"	18"

DEPTH (FT)	ELEV. (FT)	GRAPHIC	SAMPLE TYPE	SAMPLE SYMBOL	BLOWS	VISUAL SOIL IDENTIFICATION / DESCRIPTION AND REMARKS
	2155		S		16-36-44	medium plastic fines, trace fine gravel, no cementation, no reaction with HCl. (SC)
115	2150		S		9-15-17	LEAN CLAY WITH SAND, hard, moist, brown, medium plastic CLAY, little fine to coarse sand, trace fine gravel, no cementation, no reaction with HCl. (CL)
120	2145		S		17-50/3"	CLAYEY SAND, very dense, moist, grayish brown, fine to medium SAND, little low plastic fines, no cementation, no reaction with HCl. (SC)
125	2140		S		50/4"	
130	2135		S		24-38-50/4"	POORLY GRADED SAND, very dense, moist, red brown, fine to medium SAND, trace nonplastic fines, no cementation, no reaction with HCl. (SP)
135	2130		S		10-11-19	SANDY LEAN CLAY, hard, moist, brown, medium plastic CLAY, some fine to coarse sand, trace fine gravel, no cementation, no reaction with HCl. (CL)
140	2125		S		45-50/2"	CLAYEY SAND, very dense, moist, gray brown, fine to coarse SAND, little low plastic fines, no cementation, no reaction with HCl. (SC)
145	2120		S		50/2"	Becomes brown, few fine to coarse gravel.
150	2115		S		13-32-50/5"	Becomes some low plastic fines.
155	2110					EOB @ 150'. Stopped sampler @ 151.4'. Groundwater was encountered @ 55'. Backfilled hole with ADWR compliant grout.
160	2105					
165	2100					
170	2095					
175	2090					
180	2085					
185	2080					
190	2075					
195	2070					
200	2065					
205	2060					
210	2055					
215	2050					
220						

BORING PLAN

SCALE 1"=50'

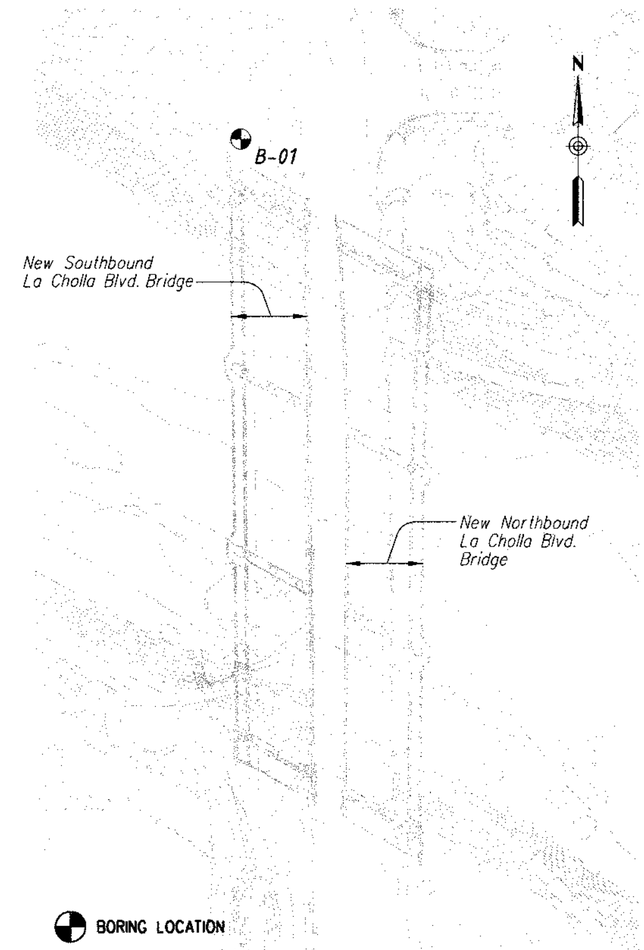

GROUNDWATER DATA FOR B-01					
Date	Time	Water Depth (ft)	Casing Depth (ft)	Hole Depth (ft)	Symbol
04/15/08	12:30 PM	55.0	--	55.0	▽

Note:

For General Notes, See Sheet S8.

CALL TWO WORKING DAYS BEFORE YOU DIG
602-263-1100
1-800-STAKE-IT
(OUTSIDE MARICOPA COUNTY)

No.	Revision Description	Engineer	Date

Designed	WUF	8/09
Drawn	TLC	8/09
Checked	NCS	8/09
Proj. Engr.	WUF	8/09

Priscilla S. Cornelio, P.E., Director

REGISTERED PROFESSIONAL ENGINEER (CIVIL) CERTIFICATE NO. 32901 N.C. SANTANI ARIZONA U.S.A. Expires 09-30-2010

NCS CONSULTANTS, LLC
640 W PASEO RIO GRANDE
TUCSON, AZ 85737
520-544-2786

Pima County Department of Transportation

FOUNDATION DATA
LA CHOLLA BOULEVARD BRIDGE
RUTHRAUFF RD. TO RIVER RD.
PROJECT NO. 4LCTR

Scales	Horiz. 1"=50'	Sheet S9 of S58	Page 246 of 356

DATE: 08\13\09 10:26:55 AM

FILE:C:\PWWORKING\PHX\DMS42758\20S-B08.DGN

NCS BORING LOG: B-02 (1 of 2)

NORTHING: 475,132 EASTING: 979,582
ELEV.: 2,247.0 TOTAL DEPTH: 151.5

STARTED: 04/21/2008 07:30 AM
FINISHED: 04/22/2008 03:30 PM

CONTRACTOR: GSI
DRILLER: Chuck
INSPECTOR: WUF
RIG TYPE: truck mtd. CME 75
DRILLING METHOD: 8" O.D. HSA
HAMMER TYPE: Auto Hammer
NCS PROJECT #: J2007-09

SAMPLER TYPES	Type	Symbol	Description	I.D.	O.D.	Length
	S		Split Spoon	1.375"	2"	18"
	R		Ring Sampler	2.5"	3"	18"
	S2		Split Spoon	0.87"	1.5"	18"

DEPTH (FT)	ELEV. (FT)	SAMPLE TYPE	SAMPLE SYMBOL	BLOWS	VISUAL SOIL IDENTIFICATION / DESCRIPTION AND REMARKS
	2245				SILTY SAND WITH GRAVEL, dense, dry, brown, fine to coarse SAND, little fine to coarse gravel, little nonplastic fines, no cementation, strong reaction with HCl, max. particle size 1". (SM)
5	2240	S		45-27-13	
10	2235	R		23-22	Becomes moist, some fine to coarse gravel, weak reaction with HCl.
15	2230	S		6-10-24	Becomes wet.
20	2225	S		9-8-8	Becomes medium dense.
25	2220	S		19-50/4"	No recovery.
30	2215	S		29-13-24	WELL-GRADED SAND WITH CLAY AND GRAVEL, dense, moist, brown, fine to coarse SAND, little fine to coarse gravel, little low plastic fines, no cementation, no reaction with HCl, max. particle size 1". (SW-SC)
35	2210	S		3-8-23	CLAYEY SAND WITH GRAVEL, dense, moist, brown, fine to coarse SAND, little low plastic fines, little fine to coarse gravel, no cementation, no reaction with HCl, max. particle size 1.25". (SC) Groundwater encountered @ 37'.
40	2205	S		6-10-14	SANDY LEAN CLAY, very stiff, moist, brown, low plastic CLAY, some fine to coarse sand, few fine gravel, no cementation, no reaction with HCl. (CL)
45	2200	S		3-5-9	Becomes LEAN CLAY WITH SAND, stiff, little fine to coarse sand.
50	2195	S		6-8-10	Becomes LEAN CLAY, very stiff, few fine to medium sand.
55	2190				
60	2185	S		21-28-9	Becomes hard.
65	2180	R		10-24	No recovery.
70	2175	S		7-19-15	CLAYEY SAND, dense, wet, brown, fine to coarse SAND, little low plastic fines, few fine gravel, no cementation, no reaction with HCl. (SC)
75	2170	S		12-13-15	LEAN CLAY WITH SAND, very stiff, moist, brown, medium plastic CLAY, little fine to medium sand, no cementation, no reaction with HCL. (CL)
80	2165	S		11-31-15	Becomes hard.
85	2160	S		9-13-17	
90	2155	R		12-32	
95	2150	S		10-28-38	
100	2145	S		12-11-17	Becomes very stiff.
105	2140	S		50/4"	WELL-GRADED SAND WITH GRAVEL, very dense, moist, grayish brown, fine to coarse SAND, little fine to coarse gravel, trace nonplastic fines, no cementation, no reaction with HCL, max. particle size 1". (SW)
110					

NCS BORING LOG: B-02 (2 of 2)

NORTHING: 475,132 EASTING: 979,582
ELEV.: 2,247.0 TOTAL DEPTH: 151.5

STARTED: 04/21/2008 07:30 AM
FINISHED: 04/22/2008 03:30 PM

CONTRACTOR: GSI
DRILLER: Chuck
INSPECTOR: WUF
RIG TYPE: truck mtd. CME 75
DRILLING METHOD: 8" O.D. HSA
HAMMER TYPE: Auto Hammer
NCS PROJECT #: J2007-09

SAMPLER TYPES	Type	Symbol	Description	I.D.	O.D.	Length
	S		Split Spoon	1.375"	2"	18"
	R		Ring Sampler	2.5"	3"	18"
	S2		Split Spoon	0.87"	1.5"	18"

DEPTH (FT)	ELEV. (FT)	SAMPLE TYPE	SAMPLE SYMBOL	BLOWS	VISUAL SOIL IDENTIFICATION / DESCRIPTION AND REMARKS
	2135	S		50/4"	
115	2130	S		50/4"	
120	2125	S		18-14-18	LEAN CLAY WITH SAND, hard, moist, brown, medium plastic CLAY, little fine to coarse sand, trace fine gravel, no cementation, no reaction with HCl. (CL)
125	2120	S		50/3"	WELL-GRADED SAND WITH CLAY AND GRAVEL, very dense, moist, grayish brown, fine to coarse SAND, few low plastic fines, little fine to coarse gravel, no cementation, no reaction with HCl. (SW-SC)
130	2115	S		50/2"	
135	2110	S		50/5"	
140	2105	S		19-40-35	CLAYEY SAND WITH GRAVEL, very dense, moist, brown, fine to coarse SAND, some fine to coarse gravel, little high plastic fines, no cementation, no reaction with HCl. (SC)
145	2100	S		19-26-42	
150	2095	S		18-36-31	
155	2090				EOB @ 150'. Groundwater was encountered @ 37'. Backfilled hole with ADWR compliant grout.
160	2085				
165	2080				
170	2075				
175	2070				
180	2065				
185	2060				
190	2055				
195	2050				
200	2045				
205	2040				
210	2035				
215	2030				
220					

BORING PLAN

SCALE 1"=50'

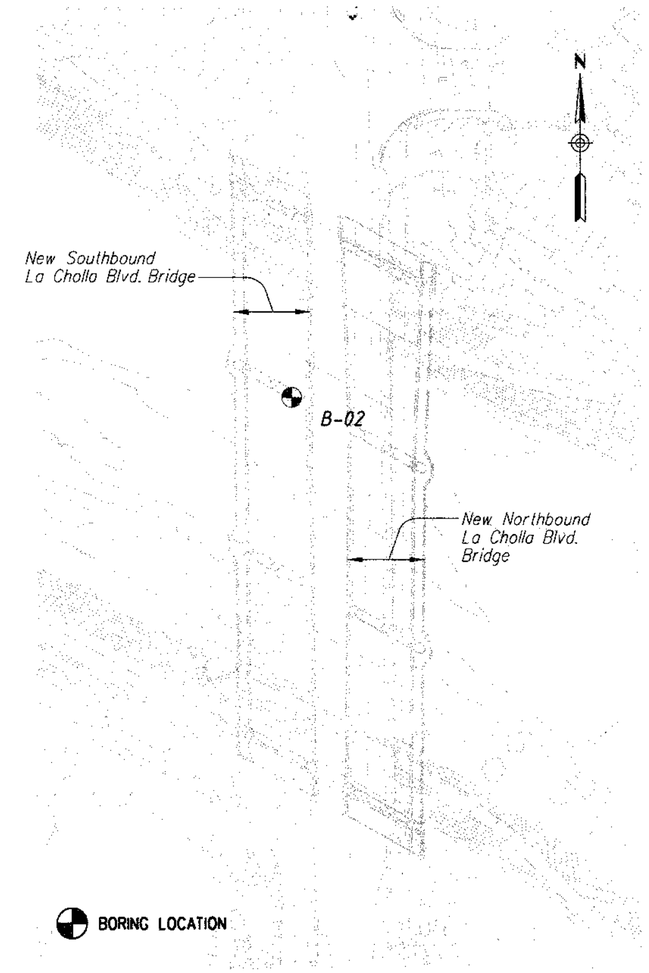

GROUNDWATER DATA FOR B-02					
Date	Time	Water Depth (ft)	Casing Depth (ft)	Hole Depth (ft)	Symbol
04/21/08	11:00 AM	37.0	--	37.0	▽

Note:

For General Notes, See Sheet S8.

CALL TWO WORKING DAYS BEFORE YOU DIG
602-263-1100
1-800-STAKE-IT
(OUTSIDE MARICOPA COUNTY)

No.	Revision Description	Date

		Date
Designed	WUF	8/09
Drawn	TLC	8/09
Checked	NCS	8/09
Proj. Engr.	WUF	8/09

Engineer

Priscilla S. Cornelio, P.E., Director

REGISTERED PROFESSIONAL ENGINEER (CIVIL) CERTIFICATE NO. 32901 K.C. SAMTANI ARIZONA U.S.A. Expires 09-30-2010

NCS CONSULTANTS, LLC
640 W PASEO RIO GRANDE
TUCSON, AZ 85737
520-544-2786

Pima County Department of Transportation

FOUNDATION DATA
LA CHOLLA BOULEVARD BRIDGE
RUTHRAUFF RD. TO RIVER RD.
PROJECT NO. 4LC11R

Scales	Horiz. 1"=50'	Sheet S10 of S58	Page 247 of 356

FILE:C:\PWWORKING\PHX\DMS42758\20S-B09.DGN

DATE: 08\13\09 10:27:59 AM

NCS BORING LOG: B-03 (1 of 2)

NORTHING: 475,014 EASTING: 979,581
ELEV.: 2,247.0 TOTAL DEPTH: 151.5

STARTED: 04/23/2008 07:30 AM
FINISHED: 04/24/2008 10:00 AM

CONTRACTOR: GSI
DRILLER: Chuck
INSPECTOR: WUF
RIG TYPE: truck mtd. CME 75
DRILLING METHOD: 8" O.D. HSA
HAMMER TYPE: Auto Hammer
NCS PROJECT #: J2007-09

SAMPLER TYPES	Type	Symbol	Description	I.D.	O.D.	Length
	S		Split Spoon	1.375"	2"	18"
	R		Ring Sampler	2.5"	3"	18"
	S2		Split Spoon	0.87"	1.5"	18"

DEPTH (FT)	ELEV. (FT)	SAMPLE TYPE	SAMPLE SYMBOL	BLOWS	VISUAL SOIL IDENTIFICATION / DESCRIPTION AND REMARKS
	2245				SILTY SAND WITH GRAVEL, dense, moist, brown, fine to coarse SAND, little fine to coarse gravel, little nonplastic fines, no cementation, strong reaction with HCl, max. particle size 1.75".(SM)
5	2240	R		14-37	
10	2235	S		7-8-9	Becomes medium dense, no reaction with HCl.
15	2230	S		5-6-7	Becomes wet.
20	2225	S		4-6-6	
25	2220	S		6-14-19	Becomes dense, some fine to coarse gravel.
30	2215	S		8-15-16	
35	2210	S		8-15-19	CLAYEY SAND, dense, wet, brown, fine to coarse SAND, little fine to coarse gravel, little low plastic fines, no cementation, no reaction with HCl. (SC) Groundwater encountered @ 36'.
40	2205	S		2-6-9	SANDY LEAN CLAY, very stiff, moist, brown, medium plastic CLAY, some fine to medium sand, trace fine gravel, no cementation, no reaction with HCl. (CL)
45	2200	S		1-3-5	Becomes medium.
50	2195	S		6-9-11	Becomes very stiff.
55	2190	R		7-13	
60	2185	S		7-9-12	
65	2180	S		5-9-12	
70	2175	S		9-18-27	SILTY SAND, dense, moist, brown, fine to coarse SAND, little nonplastic fines, trace fine gravel, no cementation, no reaction with HCl. (SM)
75	2170	S		13-21-20	
80	2165	S		7-22-50/5"	CLAYEY SAND, very dense, moist, brown, fine to coarse SAND, some medium plastic fines, no cementation, no reaction with HCl. (SC)
85	2160	S		10-14-16	Becomes dense.
90	2155	S		11-18-23	
95	2150	S		12-34-36	Becomes very dense, grayish brown, little medium plastic fines, few fine gravel.
100	2145	S		6-8-13	LEAN CLAY WITH SAND, very stiff, moist, brown, medium plastic CLAY, little fine to coarse sand, no cemenation, no reaction with HCL. (CL)
105	2140	S		14-19-29	POORLY GRADED SAND, dense, moist, grayish brown, fine to coarse SAND, few low plastic fines, trace fine gravel, no cementation, no reaction with HCl. (SP-SC)
110					WELL-GRADED SAND WITH GRAVEL, very dense, moist, grayish

NCS BORING LOG: B-03 (2 of 2)

NORTHING: 475,014 EASTING: 979,581
ELEV.: 2,247.0 TOTAL DEPTH: 151.5

STARTED: 04/23/2008 07:30 AM
FINISHED: 04/24/2008 10:00 AM

CONTRACTOR: GSI
DRILLER: Chuck
INSPECTOR: WUF
RIG TYPE: truck mtd. CME 75
DRILLING METHOD: 8" O.D. HSA
HAMMER TYPE: Auto Hammer
NCS PROJECT #: J2007-09

SAMPLER TYPES	Type	Symbol	Description	I.D.	O.D.	Length
	S		Split Spoon	1.375"	2"	18"
	R		Ring Sampler	2.5"	3"	18"
	S2		Split Spoon	0.87"	1.5"	18"

DEPTH (FT)	ELEV. (FT)	SAMPLE TYPE	SAMPLE SYMBOL	BLOWS	VISUAL SOIL IDENTIFICATION / DESCRIPTION AND REMARKS
115	2135	S		10-49-45	brown, fine to coarse SAND, little fine to coarse gravel, few low plastic fines, no cementation, no reaction with HCl. (SW-SC)
	2130	S		26-29-34	
120	2125	S		5-10-16	SANDY LEAN CLAY, very stiff, moist, brown, medium plastic CLAY, some fine to coarse sand, no cementation, no reaction with HCl. (CL)
125	2120	S		45-50/2"	WELL-GRADED SAND WITH GRAVEL, very dense, moist, grayish brown, fine to coarse SAND, little fine to coarse gravel, few low plastic fines, no cementation, no reaction with HCl. (SW-SC)
130	2115	S		49-50/2"	
135	2110	S		15-20-27	CLAYEY SAND WITH GRAVEL, dense, moist, brown, fine to coarse SAND, some fine to coarse gravel, little high plastic fines, no cementation, no reaction with HCl. (SC)
140	2105	S		27-42-48	Becomes very dense.
145	2100	S		7-9-22	Becomes dense.
150	2095	S		17-29-30	Becomes very dense.
155	2090				EOB @ 150'. Stopped sampler @ 151.5'. Groundwater encountered @ 36'. Backfilled hole with ADWR compliant grout.
160	2085				
165	2080				
170	2075				
175	2070				
180	2065				
185	2060				
190	2055				
195	2050				
200	2045				
205	2040				
210	2035				
215	2030				
220					

BORING PLAN

SCALE 1"=50'

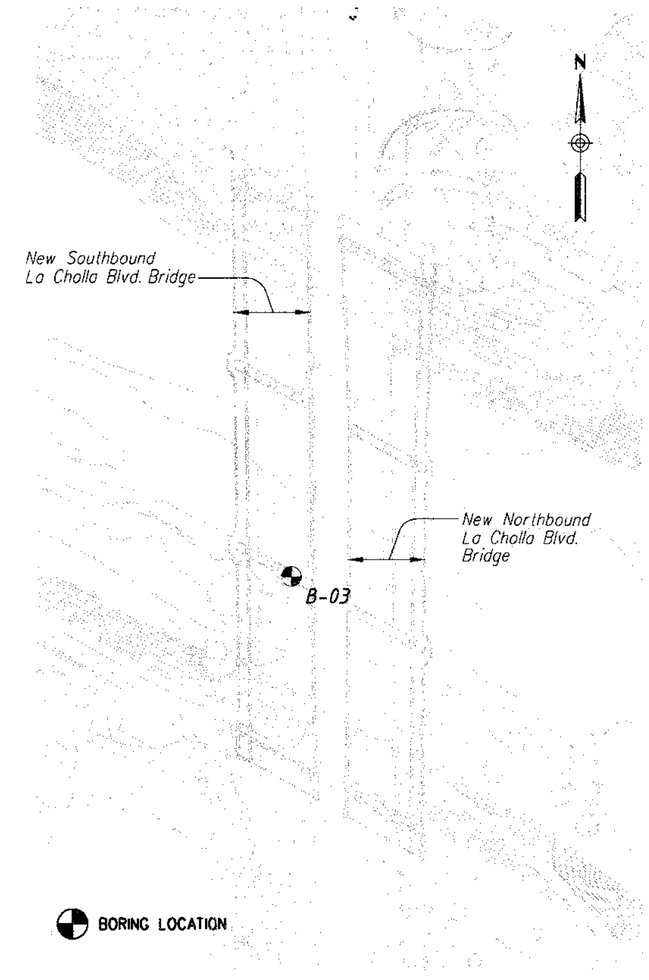

GROUNDWATER DATA FOR B-03					
Date	Time	Water Depth (ft)	Casing Depth (ft)	Hole Depth (ft)	Symbol
04/23/08	09:30 AM	36.0	--	36.0	▽

Note:

For General Notes, See Sheet S8.

CALL TWO WORKING DAYS BEFORE YOU DIG
602-263-1100
1-800-STAKE-IT
(OUTSIDE MARICOPA COUNTY)

No.	Revision Description	Engineer	Date

		Date
Designed	WUF	8/09
Drawn	TLC	8/09
Checked	NCS	8/09
Proj. Engr.	WUF	8/09

Priscilla S. Cornelio, P.E., Director

REGISTERED PROFESSIONAL ENGINEER CERTIFICATE NO. 32901 N.C. SANTANI ARIZONA, U.S.A. Expires 09-30-2010

NCS CONSULTANTS, LLC
640 W PASEO RIO GRANDE
TUCSON, AZ 85737
520-544-2786

Pima County Department of Transportation

FOUNDATION DATA
LA CHOLLA BOULEVARD BRIDGE
RUTHRAUFF RD. TO RIVER RD.
PROJECT NO. 4LCTR

DATE: 08\13\09 9:49:58 AM

FILE: C:\PWWORKING\PHX\DMS42758\20S-B10.DGN

Scales	Horiz. 1"=50'	Sheet S11 of S58	Page 248 of 356

NCS BORING LOG: B-04 (1 of 2)

NORTHING: 474,813 EASTING: 979,687
ELEV.: 2,265.0 TOTAL DEPTH: 151.5

STARTED: 04/14/2008 08:00 AM
FINISHED: 04/15/2008 10:00 AM

CONTRACTOR: GSI
DRILLER: Chuck
INSPECTOR: WUF
RIG TYPE: truck mtd. CME 75
DRILLING METHOD: 8" O.D. HSA
HAMMER TYPE: Auto Hammer
NCS PROJECT #: J2007-09

SAMPLER TYPES	Type	Symbol	Description	I.D.	O.D.	Length
	S		Split Spoon	1.375"	2"	18"
	R		Ring Sampler	2.5"	3"	18"
	S2		Split Spoon	0.87"	1.5"	18"

DEPTH (FT)	ELEV. (FT)	SAMPLE TYPE	SAMPLE SYMBOL	BLOWS	VISUAL SOIL IDENTIFICATION / DESCRIPTION AND REMARKS
5	2260	S		8-13-11	WELL-GRADED SAND WITH CLAY AND GRAVEL, medium dense, dry, brown, fine to coarse SAND, little fine to coarse gravel, few low plastic fines, weak cementation, strong reaction with HCL, max. particle size 0.75". (SW-SC)
10	2255	S		11-24-27	SILTY SAND, very dense, dry, brown, fine to coarse SAND, little nonplastic fines, few fine to coarse gravel, no cementation, no reaction with HCl. (SM)
15	2250	S		5-6-8	WELL-GRADED GRAVEL WITH SILT AND SAND, medium dense, dry, brown, fine to coarse GRAVEL, some fine to coarse sand, few nonplastic fines, no cementation, weak reaction with HCl. (GW-GM)
20	2245	S		7-7-9	Becomes moist, no reaction with HCl.
25	2240	S		10-12-14	
30	2235	S		10-8-12	
35	2230	R		19-18	
40	2225	S		5-7-10	WELL-GRADED SAND WITH CLAY, medium dense, moist, brown, fine to coarse SAND, few low plastic fines, few fine gravel, no cementation, no reaction with HCl. (SW-SC)
45	2220	S		15-28-19	CLAYEY SAND, dense, moist, brown, fine to coarse SAND, little low plastic fines, few fine to coarse gravel, no cementation, no reaction with HCl. (SC)
50	2215	S		28-33-33	Groundwater encountered @ 48'. Becomes very dense.
55	2210	S		4-4-10	LEAN CLAY WITH SAND, stiff, moist, brown, medium plastic CLAY, little fine to coarse sand, trace fine gravel, no cementation, no reaction with HCl. (CL)
60	2205	S		5-8-10	Becomes very stiff.
65	2200	S		2-4-8	Becomes stiff.
70	2195	R		50/5"	CLAYEY SAND, very dense, moist, brown, fine to coarse SAND, some low plastic fines, few fine gravel, no cementation, no reaction with HCL. (SC)
75	2190	S		5-6-11	LEAN CLAY WITH SAND, very stiff, moist, brown, medium plastic CLAY, little fine to coarse sand, no cementation, no reaction with HCL. (CL)
80	2185	S		5-23-50/5"	Becomes SANDY LEAN CLAY, hard, some fine to coarse sand.
85	2180	S		11-20-26	WELL-GRADED SAND WITH CLAY, dense, moist, brown, fine to coarse SAND, few low plastic fines, trace fine gravel, no cementation, no reaction with HCl. (SW-SC)
90	2175	S		12-17-17	LEAN CLAY WITH SAND, hard, moist, brown, medium plastic CLAY, little fine to coarse sand, no cementation, no reaction with HCl. (CL)
95	2170	S		7-9-18	Becomes LEAN CLAY, very stiff, few fine to medium sand.
100	2165	S		20-27-50/4"	Becomes LEAN CLAY WITH SAND, little fine to coarse sand.
105	2160	S		20-40-44	SILTY SAND, very dense, moist, brown, fine to coarse SAND, little nonplastic fines, trace fine gravel, no cementation, no reaction with HCl. (SM)
110	2155				LEAN CLAY WITH SAND, very stiff, moist, brown, medium plastic

NCS BORING LOG: B-04 (2 of 2)

NORTHING: 474,813 EASTING: 979,687
ELEV.: 2,265.0 TOTAL DEPTH: 151.5

STARTED: 04/14/2008 08:00 AM
FINISHED: 04/15/2008 10:00 AM

CONTRACTOR: GSI
DRILLER: Chuck
INSPECTOR: WUF
RIG TYPE: truck mtd. CME 75
DRILLING METHOD: 8" O.D. HSA
HAMMER TYPE: Auto Hammer
NCS PROJECT #: J2007-09

SAMPLER TYPES	Type	Symbol	Description	I.D.	O.D.	Length
	S		Split Spoon	1.375"	2"	18"
	R		Ring Sampler	2.5"	3"	18"
	S2		Split Spoon	0.87"	1.5"	18"

DEPTH (FT)	ELEV. (FT)	SAMPLE TYPE	SAMPLE SYMBOL	BLOWS	VISUAL SOIL IDENTIFICATION / DESCRIPTION AND REMARKS
		S		9-11-18	CLAY, little fine to coarse sand, no cementation, no reaction with HCL. (CL)
115	2150	S		17-26-50/5"	Becomes hard.
120	2145	S		50/3"	WELL-GRADED SAND WITH GRAVEL, very dense, moist, gray, fine to coarse SAND, little fine to coarse gravel, no cementation, no reaction with HCl. (SW)
125	2140	S		24-34-47	SILTY SAND, very dense, moist, light brown, fine to coarse SAND, little nonplastic fines, few fine to coarse gravel, no cementation, no reaction with HCl, max. particle size 1.5". (SM)
130	2135	S		23-31-50/5"	
135	2130	S		17-44-50/4"	
140	2125	S		50/1"	WELL-GRADED SAND, very dense, wet, brown, fine to coarse SAND, few fine gravel, trace low plastic fines, no cementation, no reaction with HCl. (SW)
145	2120	S		43-50/4"	CLAYEY SAND, very dense, moist, brown, fine to coarse SAND, little low plastic fines, trace fine gravel, no cementation, no reaction with HCl. (SC)
150	2115	S		18-15-17	Becomes dense.
155	2110				EOB @ 150'. Groundwater encountered @ 48'. Backfilled hole with ADWR compliant grout.
160	2105				
165	2100				
170	2095				
175	2090				
180	2085				
185	2080				
190	2075				
195	2070				
200	2065				
205	2060				
210	2055				
215	2050				
220	2045				

BORING PLAN

SCALE 1"=50'

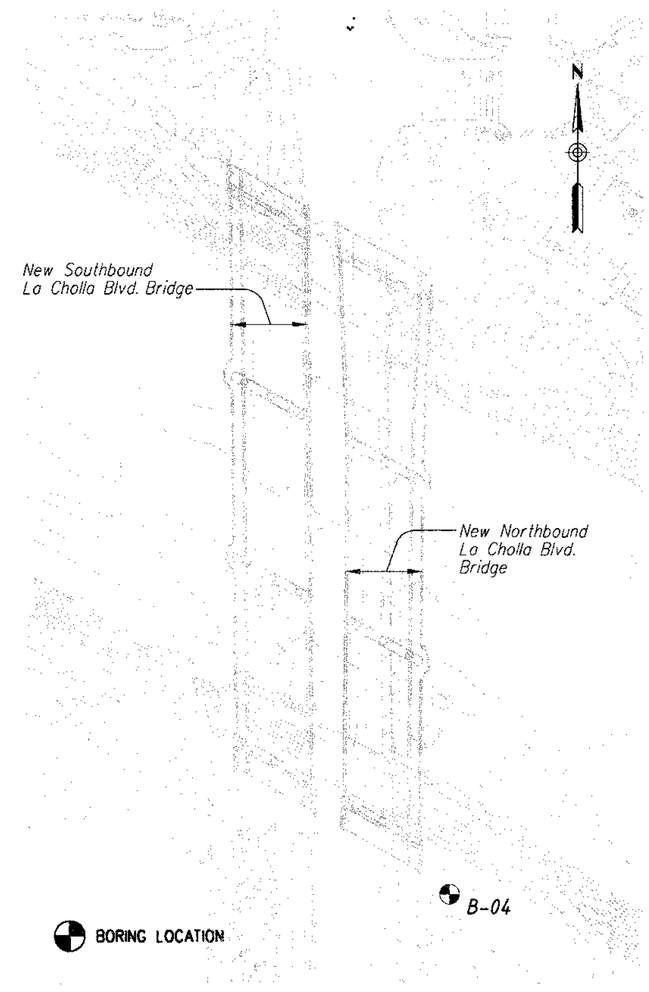

GROUNDWATER DATA FOR B-04					
Date	Time	Water Depth (ft)	Casing Depth (ft)	Hole Depth (ft)	Symbol
04/14/08	10:30 AM	48.0	--	48.0	▽

Note:

For General Notes, See Sheet S8.

CALL TWO WORKING DAYS BEFORE YOU DIG
602-263-1100
1-800-STAKE-IT
(OUTSIDE MARICOPA COUNTY)

No.	Revision Description	Date	Engineer	Date

		Date
Designed	WUF	8/09
Drawn	TLC	8/09
Checked	NCS	8/09
Proj. Engr.	WUF	8/09

Priscilla S. Cornelio, P.E., Director

REGISTERED PROFESSIONAL ENGINEER (CIVIL) CERTIFICATE NO. 32901 N. C. SWITAN ARIZONA U.S.A.
Expires 09-30-2010

NCS CONSULTANTS, LLC
640 W PASEO RIO GRANDE
TUCSON, AZ 85737
520-544-2786

Pima County Department of Transportation

FOUNDATION DATA
LA CHOLLA BOULEVARD BRIDGE
RUTHRAUFF RD. TO RIVER RD.
PROJECT NO. 4LCITR

Scales: Horiz. 1"=50'

DATE: 08\13\09 10:30:24 AM

FILE: C:\PWWORKING\PHX\DMS42758\20S-B11.DGN

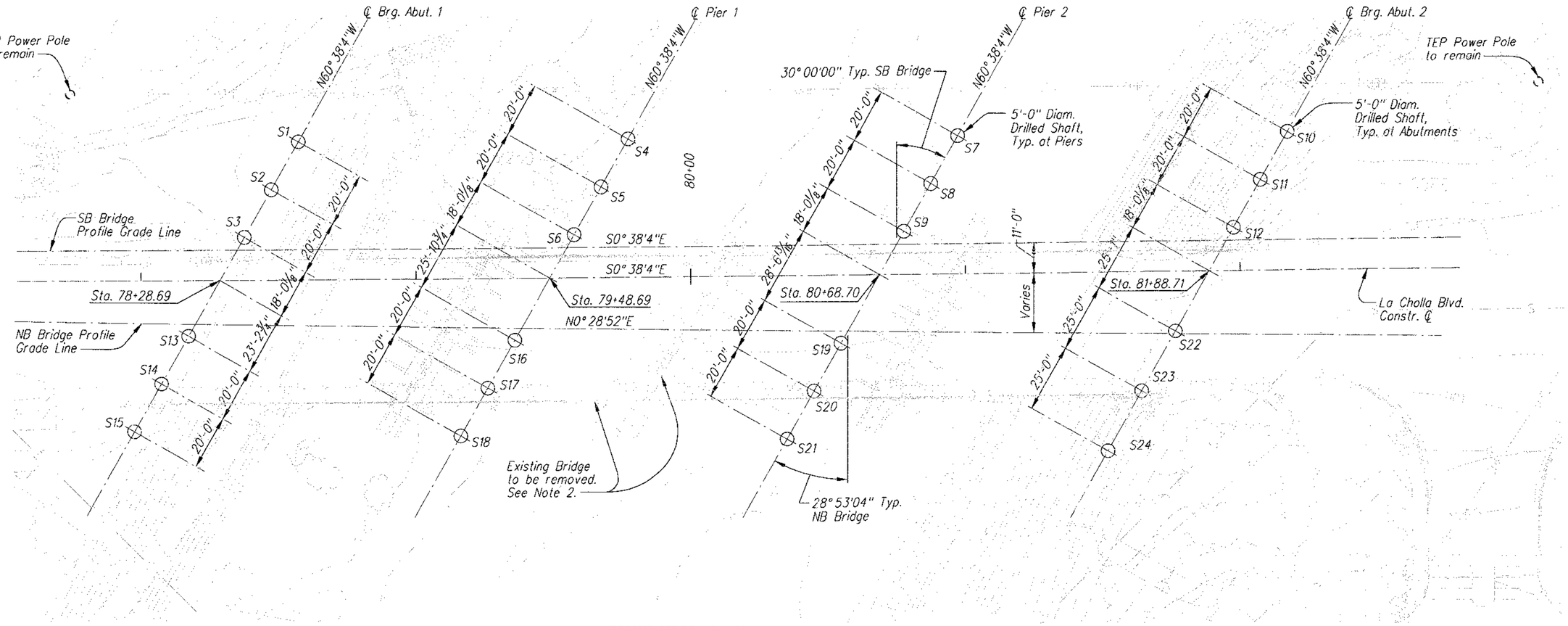

FOUNDATION PLAN

Contour Interval = 1'
Scale: 1"=20'

Notes:

1. See Sheets S5 - S7 for construction phasing and bridge removal information.
2. The existing bridge and foundations are to be removed in accordance with the project plans, Standard Specifications and the Special Provisions. For additional information regarding the existing structure, see as-built plans which are available from Pima County.
3. Placement of drilled shaft concrete shall commence within 1 hour after placement of the reinforcing cage. See Special Provisions.
4. The Contractor shall construct a confirmation shaft in accordance with the Special Provisions.
5. Construction joints not shown on the project plans will require the approval of the Engineer prior to construction.
6. Mark S1, S2, etc. indicates drilled shaft, See Shedule 1, this sheet.
7. Adjacent shafts, unless separated by a minimum of three shaft diameters, shall not be drilled until the concrete in the first shaft has been in place for a minimum of 48 hours. Vibration monitoring and observation during construction is required to ensure that freshly poured concrete is adequately protected. Vibration velocities measured at shaft shall not exceed 0.24 inches/second.
8. Locations of all utilities are approximate. Locations shown reflect the findings of the latest available mapping.
9. See Storm Water Pollution Prevention Plans (SWPPP) for construction access to Rillito River and limits of temporary disturbance of channel.
10. Dewatering may be done by permit only. See Special Provisions.
11. See Special Provisions for additional information.

DRILLED SHAFT SCHEDULE (1)

Location	Mark	Drilled Shaft Length	Drilled Shaft Diameter	Drilled Shaft Cut-off Elev.	Bottom of Drilled Shaft Elev.	Provided Capacity (kips)	Detail
SB Abut.1	S1 - S3	107.75 Ft.	5'-0"	2257.75	2150.00	900	1/S14
NB Abut.1	S13 - S15	107.03 Ft.	5'-0"	2257.03	2150.00	900	1/S14
SB Pier 1	S4 - S6	100 Ft.	5'-0"	2242.00	2142.00	1025	2/S14
NB Pier 1	S16 - S18	110 Ft.	5'-0"	2242.00	2132.00	1100	2/S14
SB Pier 2	S7 - S9	100 Ft.	5'-0"	2242.00	2142.00	1025	2/S14
NB Pier 2	S19 - S21	110 Ft.	5'-0"	2242.00	2132.00	1100	2/S14
SB Abut.2	S10 - S12	106.04 Ft.	5'-0"	2256.04	2150.00	900	1/S14
NB Abut.2	S22 - S24	106.78 Ft.	5'-0"	2256.78	2150.00	950	1/S14

Priscilla S. Cornelio, P.E. Director

Designed	FRM, SST	Date 8/09
Drawn	TRK	8/09
Checked	TWB	8/09
Proj. Engr.	TWB	8/09

No.	Revision Description	Engineer	Date

Registered Professional Engineer (Civil) CERTIFICATE NO. 29368 TED W. BUELL Date Signed 8-26-09 ARIZONA U.S.A.
Expires 09-30-2010

HDR Engineering, Inc.
5210 East Williams Circle, Suite 530
Tucson, AZ 85711-4459
(520) 584-3600

Pima County Department of Transportation

FOUNDATION PLAN & NOTES
LA CHOLLA BOULEVARD BRIDGE
RUTHRAUFF RD. TO RIVER RD.
PROJECT NO. 4LCITR

Scales	Horiz. 1"= Vert. N/A	Sheet S13 of S58	Page 250 of 356

Date: 08\20\09

File: C:\PWworking\PHX\dms42758\20S-B13.dgn

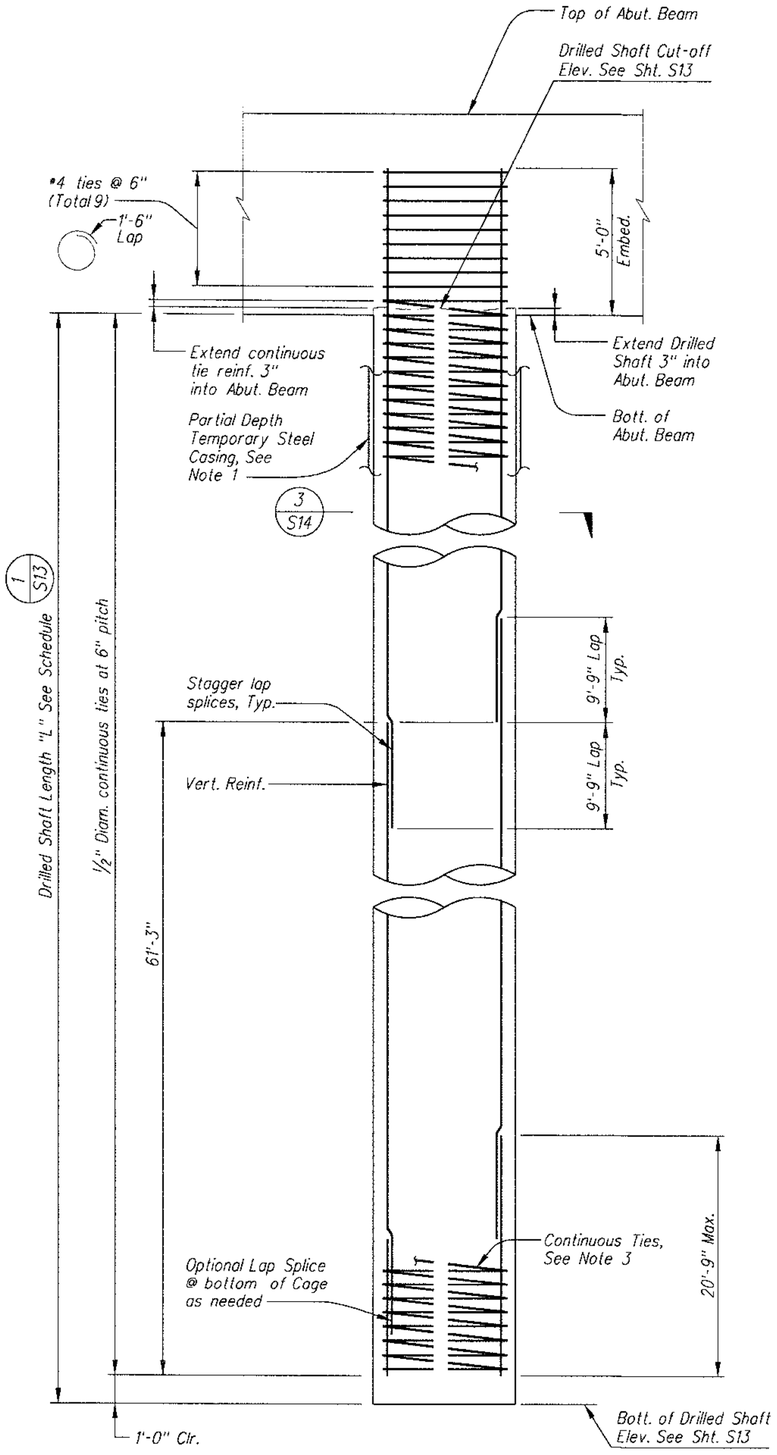

ABUTMENT - DRILLED SHAFT DETAIL (1)

Scale 3/8"=1'-0"

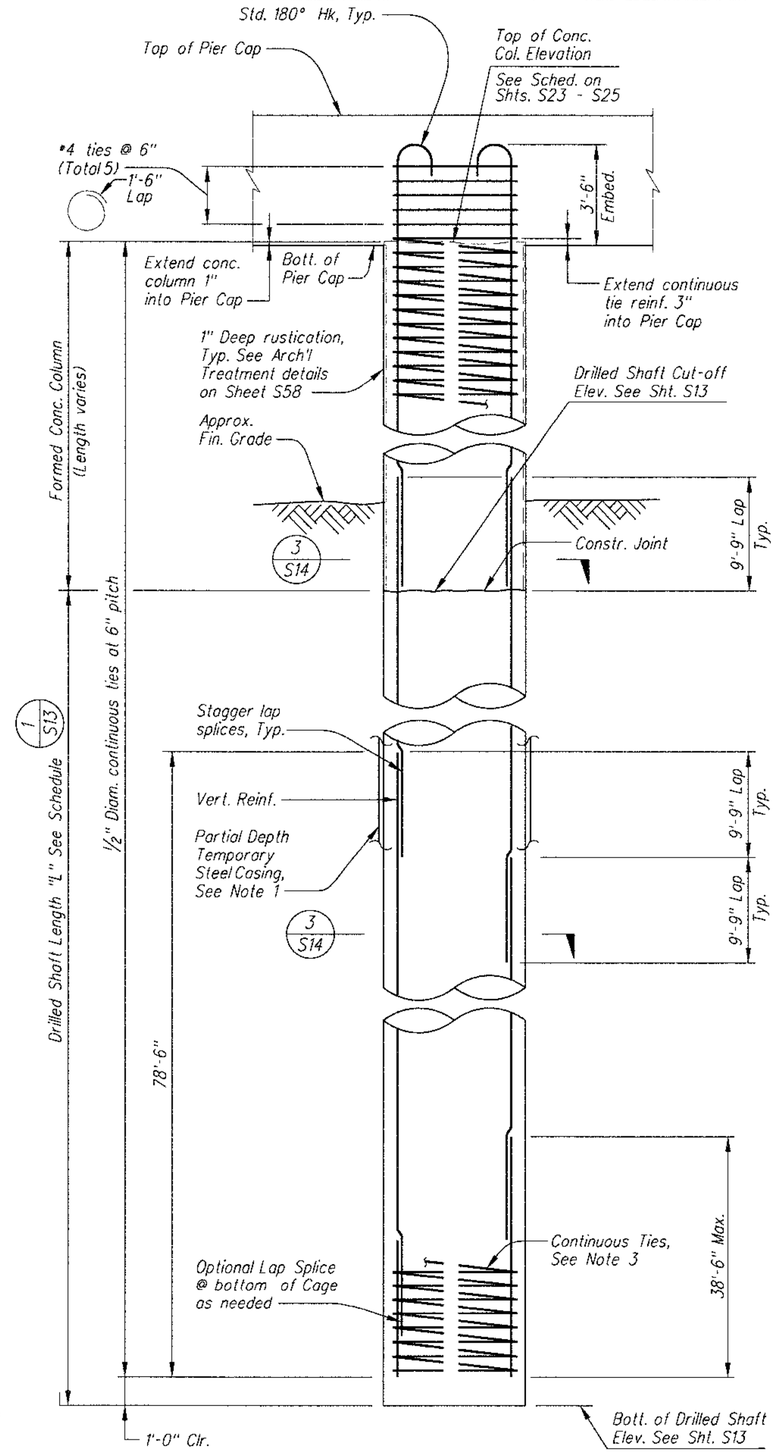

PIER - COLUMN /DRILLED SHAFT DETAIL (2)

Scale 3/8"=1'-0"

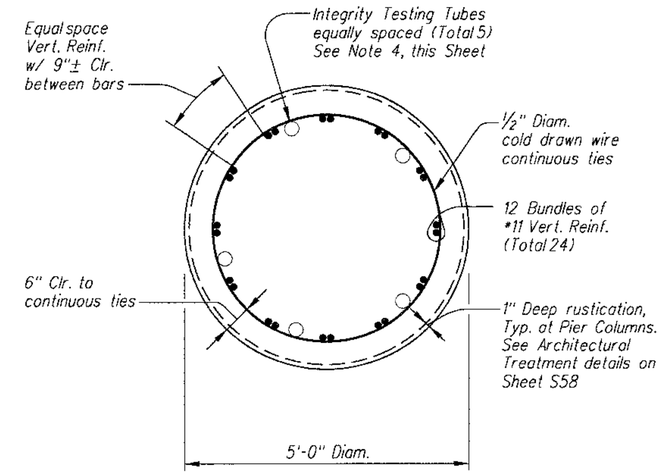

SECTION (3)

Scale 3/4"=1'-0"

Notes:

1. Contractor shall provide temporary steel casing as required to stabilize foundation materials during construction and to ensure personnel safety. At a minimum a 15' length of temporary casing shall be used at the top of shaft. See Special Provisions and Final Geotechnical Report by NCS dated September 15, 2008.
2. At the Contractor's option mechanical splices may be used and alternated with lap splices. All mechanical splices of reinforcing steel shall develop 125% of the yield strength of the reinforcing bar and shall conform to the requirements for mechanical connections in Section 605-3.02 of the Standard Specifications.
3. Continuous ties shall be cold drawn wire conforming to AASHTO M32 (minimum yield strength of 70 ksi). Anchorage and splices of continuous ties shall be provided with 1½ extra turns of the continuous tie with a 10" 135° hook around a vertical bar at the end of each continuous tie unit.
4. Tubes for integrity testing of Drilled Shafts to be placed as shown from 4'-0" above top of shaft to within 6" of bottom of shaft. Tubes to have threaded cap at top end and bottom end and be securely attached to alternate ties (do not attach to vert. reinf.). See Special Provisions.

No.	Revision Description	Engineer	Date

		Date
Designed	EPM, SST	8/09
Drawn	SST, TRK	8/09
Checked	TWB	8/09
Proj. Engr.	TWB	8/09

Priscilla S. Cornelio, P.E. Director

Registered Professional Engineer — Certificate No. 29368 — Ted W. Buell — Arizona U.S.A. — Expires 09-30-2010

HDR Engineering, Inc. 5210 East Williams Circle, Suite 530 Tucson, AZ 85711-4459 (520) 584-3600

Pima County Department of Transportation

FOUNDATION AND COLUMN DETAILS LA CHOLLA BOULEVARD BRIDGE RUTHRAUFF RD. TO RIVER RD. PROJECT NO. 4LCITR

Scales	Horiz. 1"= Vert. N/A	Sheet S14 of S58	Page 251 of 356

Date: 08\20\09

File: C:\PWworking\PHX\dms42758\20S-B14.dgn

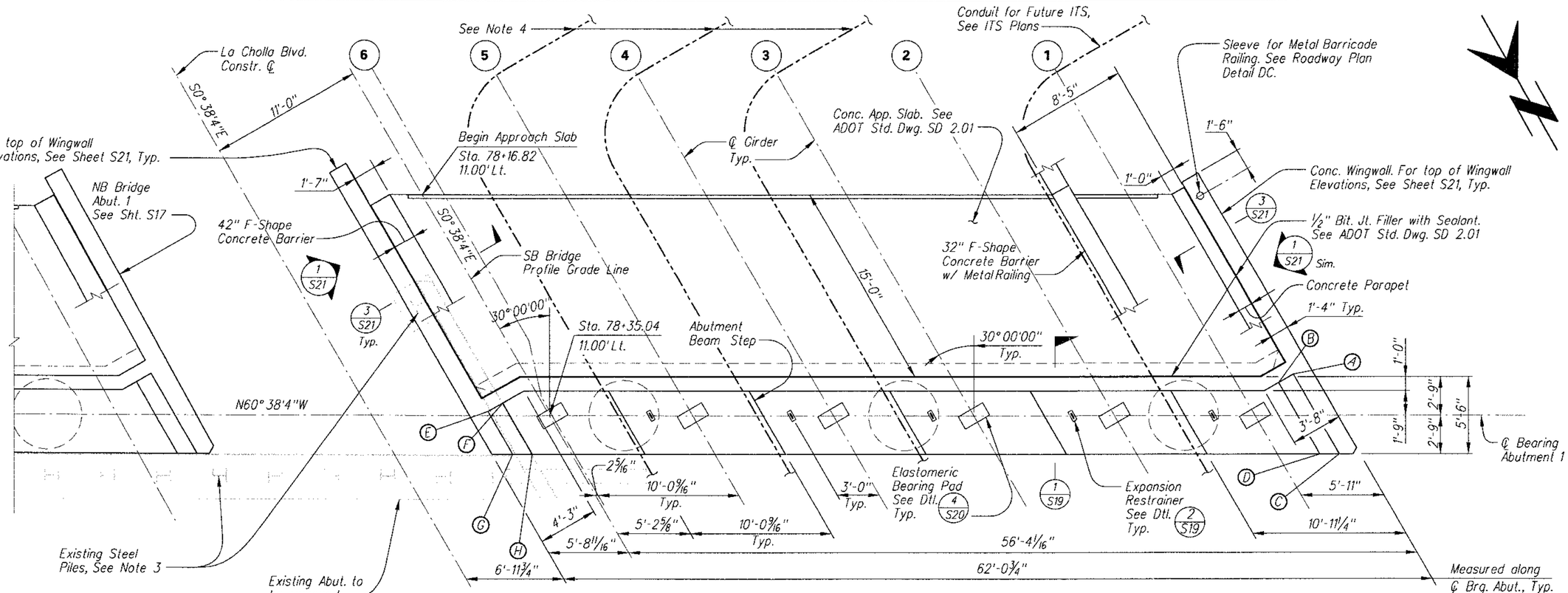

PLAN – SB ABUTMENT 1 (1)

Scale ¼"=1'-0"

End Wall Elevations	
Point	Elevation
A	2269.06
B	2268.74
C	2269.11
D	2268.79
E	2269.85
F	2269.45
G	2269.89
H	2269.49

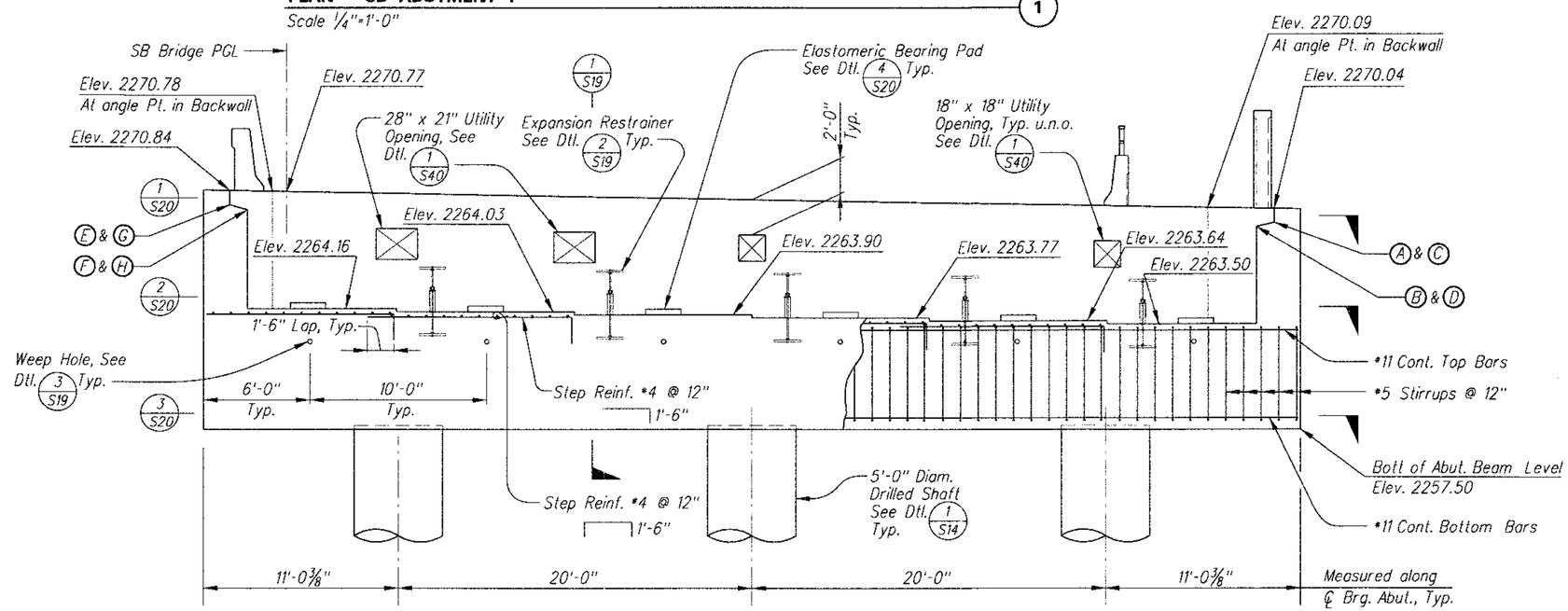

ELEVATION – SB ABUTMENT 1 (2)

Scale ¼"=1'-0"

Notes:

1. Abutment Backwall Elevations are shown at front face of Backwall.
2. Girder Bearing Elevations are to top of concrete.
3. Existing steel piles to be completely removed where conflicts occur between the new drilled shafts and the existing piles. Otherwise, steel piles to be removed to 5' minimum below finished grade or to 5' below the bottom of the existing pile cap, whichever is deeper.
4. Conduit, pullboxes, and caps provided and installed by utility company beneath approach slab and through openings in abutments, except PCDOT Contractor shall install TEP Conduit. See Sheet S40.
5. Provide step reinforcing where concrete cover over top bars exceeds 4".

Date: 08\20\09

File: C:\PWworking\PHX\dms42758\20S-B15.dgn

No.	Revision Description	Engineer	Date

		Date
Designed	EGM, SST	8/09
Drawn	SST, TRK	8/09
Checked	TWB	8/09
Proj. Engr.	TWB	8/09

Priscilla S. Cornelio, P.E. Director

Professional Engineer Certificate No. 29368 Ted W. Buell Arizona U.S.A. Expires 09-30-2010

HDR Engineering, Inc. 5210 East Williams Circle, Suite 530 Tucson, AZ 85711-4459 (520) 594-5500

Pima County Department of Transportation

SB ABUT. 1 PLAN & ELEVATION
LA CHOLLA BOULEVARD BRIDGE
RUTHRAUFF RD. TO RIVER RD.
PROJECT NO. 4LCTR

Scales	Horiz. 1"= Vert. N/A	Sheet S15 of S58	Page 252 of 356

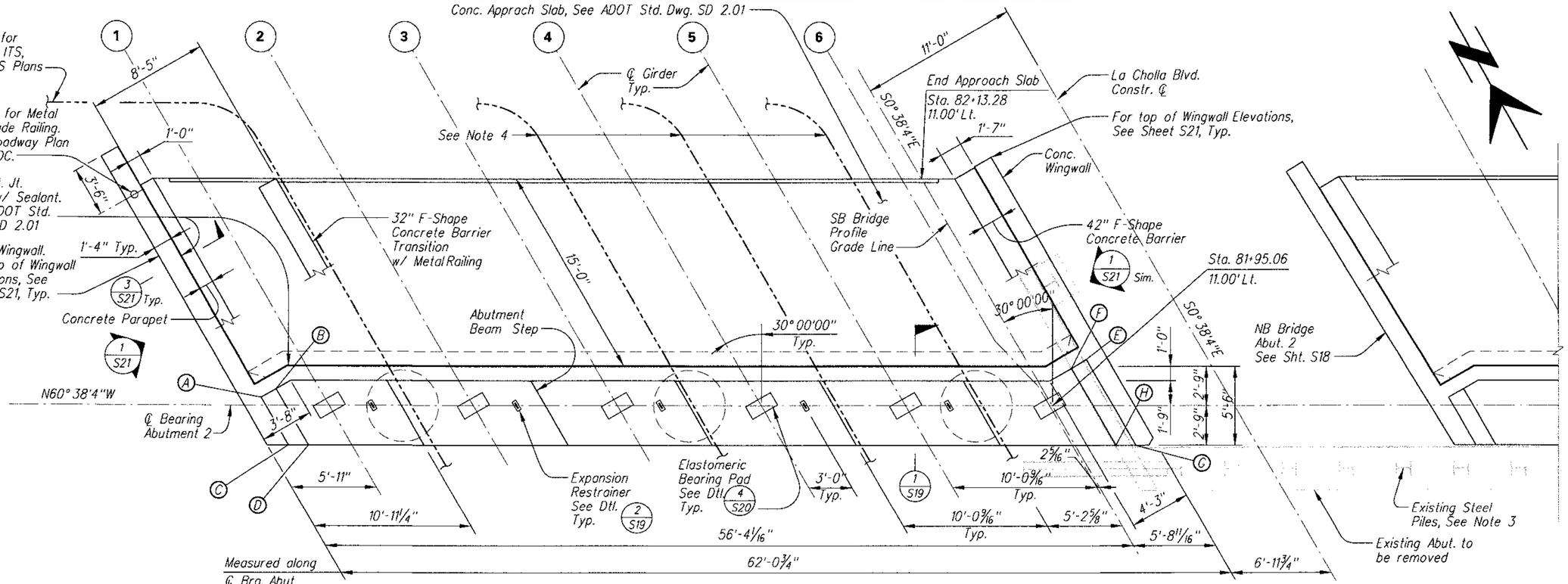

PLAN – SB ABUTMENT 2 (1)

Scale 1/4"=1'-0"

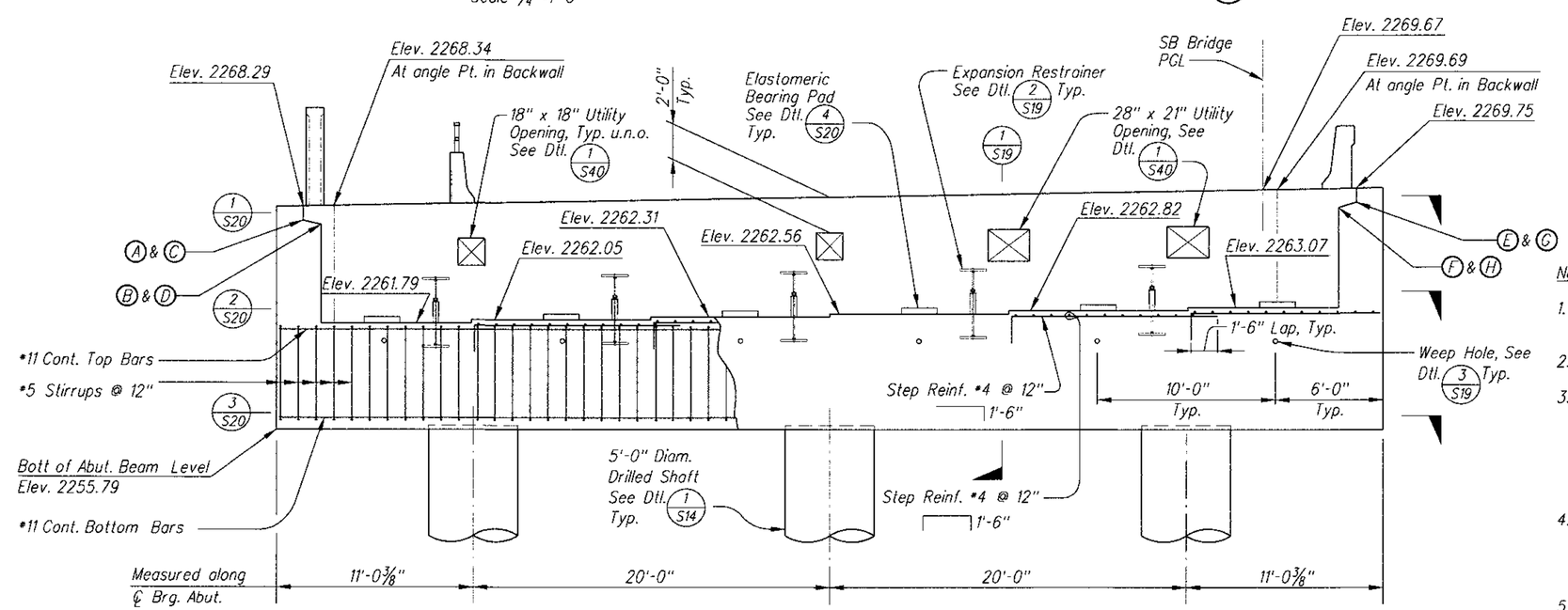

ELEVATION – SB ABUTMENT 2 (2)

Scale 1/4"=1'-0"

End Wall Elevations	
Point	Elevation
A	2267.31
B	2266.99
C	2267.37
D	2267.07
E	2268.77
F	2268.36
G	2268.87
H	2268.45

Notes:

1. Abutment Backwall Elevations are shown at front face of Backwall.
2. Girder Bearing Elevations are to top of concrete.
3. Existing steel piles to be completely removed where conflicts occur between the new drilled shafts and the existing piles. Otherwise, steel piles to be removed to 5' minimum below finished grade or to 5' below the bottom of the existing pile cap, whichever is deeper.
4. Conduit, pullboxes, and caps provided and installed by utility company beneath approach slab and through openings in abutments, except PCDOT Contractor shall install TEP Conduit. See Sheet S40.
5. Provide step reinforcing where concrete cover over top bars exceeds 4".

Priscilla S. Cornelio, P.E. Director

No.	Revision Description	Engineer	Date

		Date
Designed	FRM, SST	8/09
Drawn	SST, TRK	8/09
Checked	TWB	8/09
Proj. Engr.	TWB	8/09

Registered Professional Engineer, Certificate No. 29368, Ted W. Buelj, Arizona U.S.A. Expires 09-30-2010

HDR Engineering, Inc. 5210 East Williams Circle, Suite 530 Tucson, AZ 85711-4459 (520) 584-3600

Pima County Department of Transportation

SB ABUT. 2 PLAN & ELEVATION
LA CHOLLA BOULEVARD BRIDGE
RUTHRAUFF RD. TO RIVER RD.
PROJECT NO. 4LCITR

Scales	Horiz. 1"= / Vert. N/A	Sheet S16 of S58	Page 253 of 356

Date: 08\20\09

File: C:\PWworking\PHX\dms42758\20S-B16.dgn

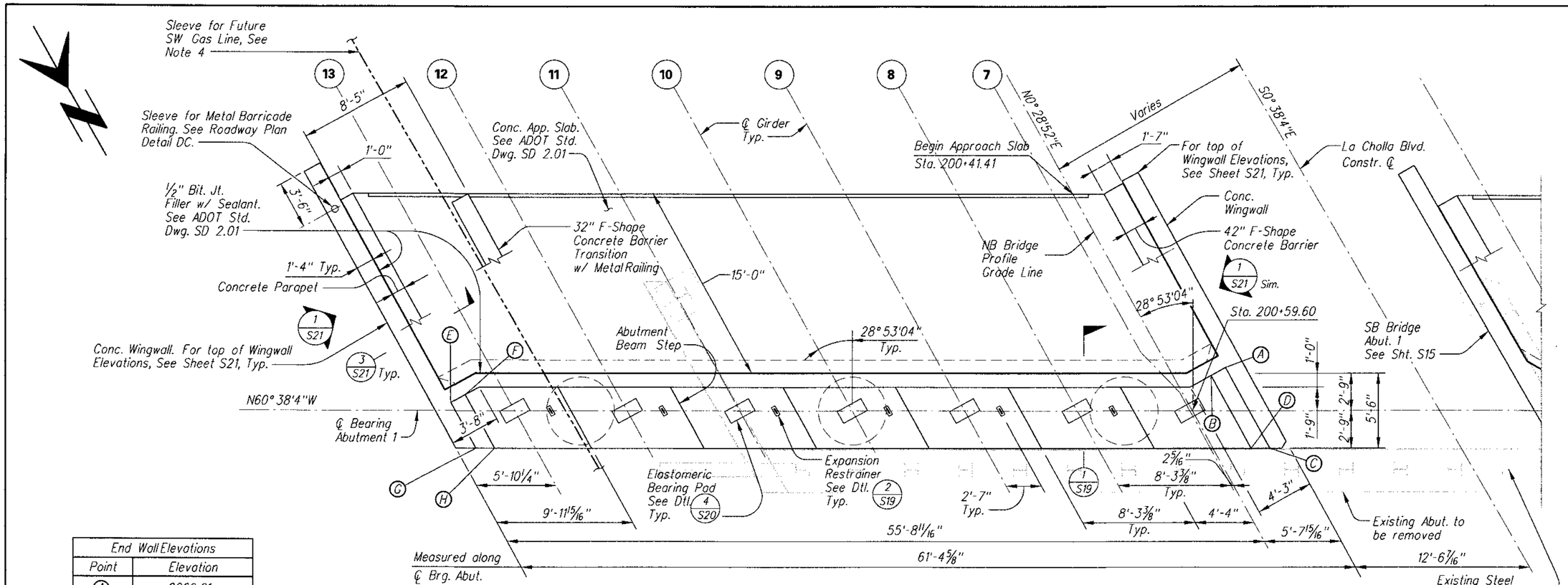

PLAN – NB ABUTMENT 1 (1)

Scale 1/4"=1'-0"

End Wall Elevations	
Point	Elevation
A	2269.61
B	2269.20
C	2269.68
D	2269.26
E	2268.31
F	2267.99
G	2268.35
H	2268.04

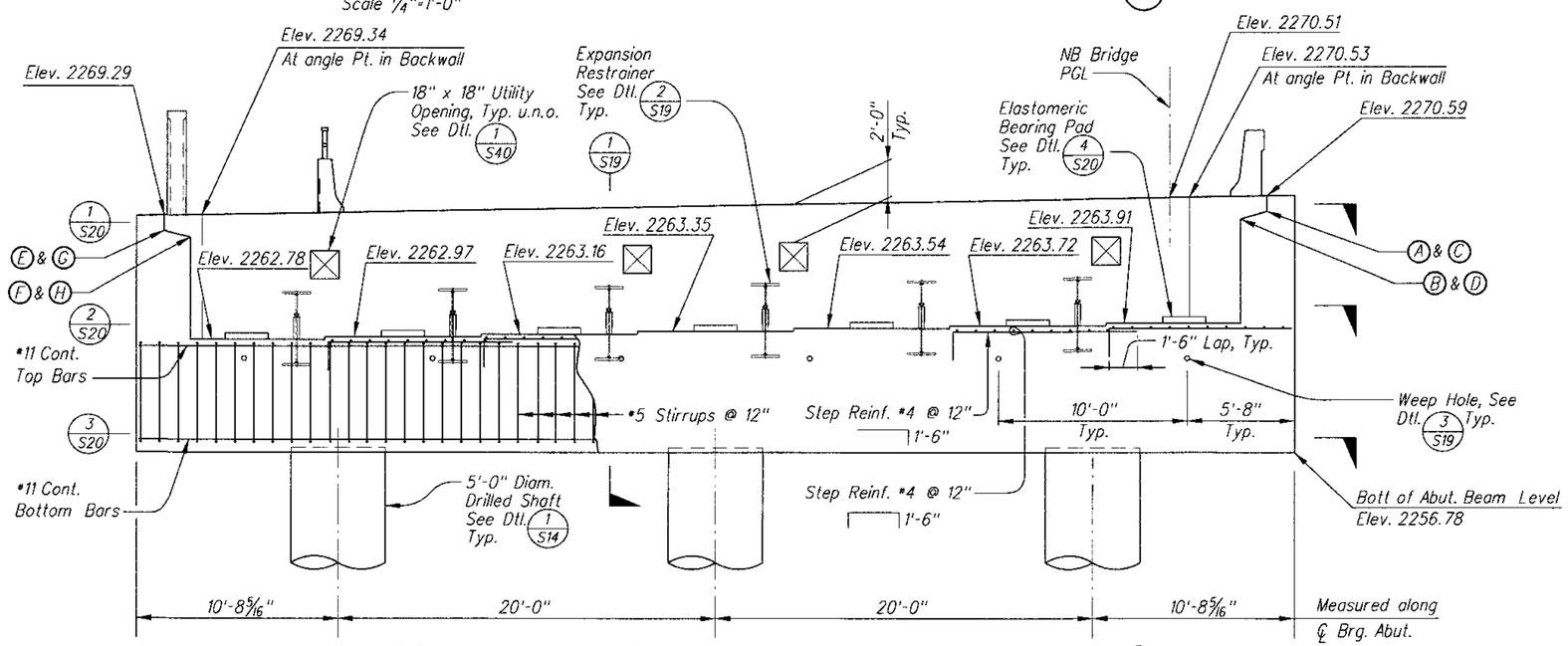

ELEVATION – NB ABUTMENT 1 (2)

Scale 1/4"=1'-0"

Notes:

1. Abutment Backwall Elevations are shown at front face of Backwall.
2. Girder Bearing Elevations are to top of concrete.
3. Existing steel piles to be completely removed where conflicts occur between the new drilled shafts and the existing piles. Otherwise, steel piles to be removed to 5' minimum below finished grade or to 5' below the bottom of the existing pile cap, whichever is deeper.
4. SW Gas will provide and install sleeve beneath approach slab and through opening in Abutment Wall, See Sheet S40.
5. Provide step reinforcing where concrete cover over top bars exceeds 4".

Date: 08\20\09

File: C:\PWworking\PHX\dms42758\20S-B17.dgn

Priscilla S. Cornelio, P.E. Director

No.	Revision Description	Engineer	Date

		Date
Designed	FRM, SST	8/09
Drawn	SST, TRK	8/09
Checked	TWB	8/09
Proj. Engr.	TWB	8/09

Registered Professional Engineer (Civil) CERTIFICATE NO. 29368 TED W. PUST Date Signed 8-21-09 ARIZONA U.S.A. Expires 09-30-2010

HDR Engineering, Inc. 5210 East Williams Circle, Suite 530 Tucson, AZ 85711-4459 (520) 584-3600

Pima County Department of Transportation

NB ABUT. 1 PLAN & ELEVATION
LA CHOLLA BOULEVARD BRIDGE
RUTHRAUFF RD. TO RIVER RD.
PROJECT NO. 4LCITR

Scales	Horiz. 1"= Vert. N/A	Sheet S17 of S58	Page 254 of 356

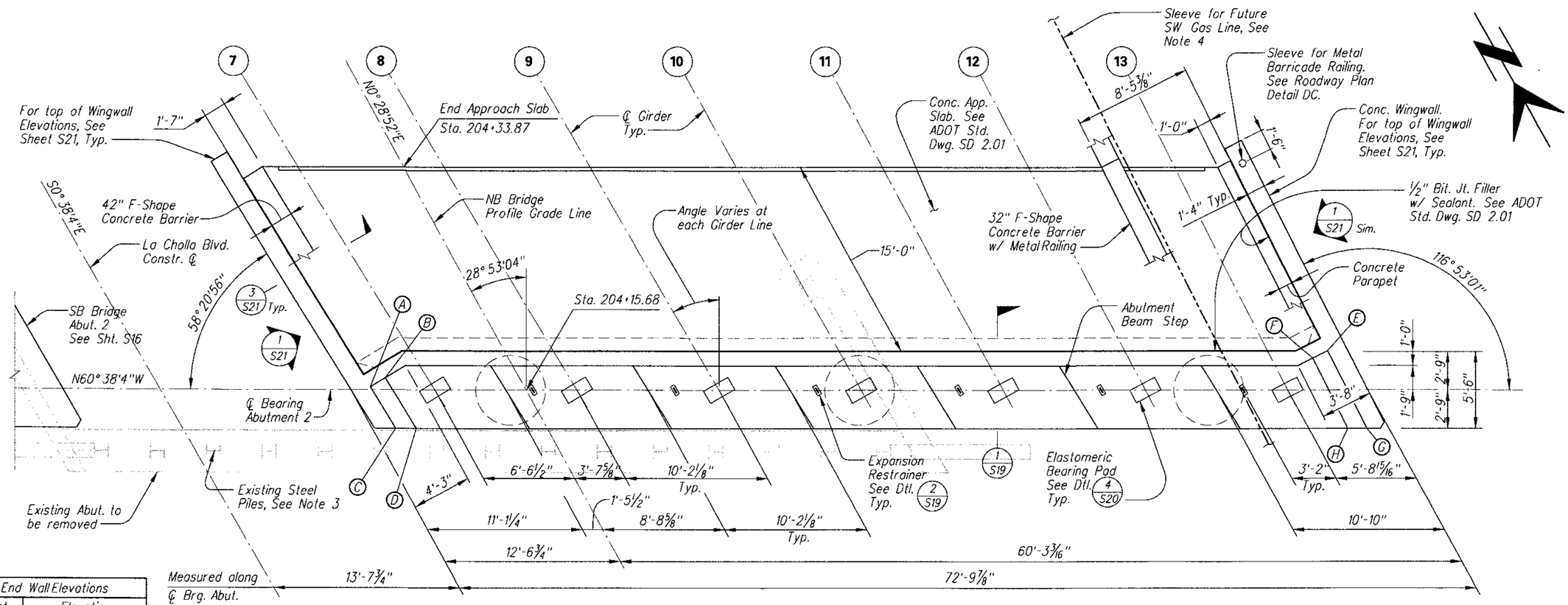

PLAN – NB ABUTMENT 2 (1)

Scale ¼"=1'-0"

End Wall Elevations	
Point	Elevation
A	2268.88
B	2268.47
C	2268.93
D	2268.53
E	2268.08
F	2267.76
G	2268.16
H	2267.83

Notes:

1. Abutment Backwall Elevations are shown at front face of Backwall.
2. Girder Bearing Elevations are to top of concrete.
3. Existing steel piles to be completely removed where conflicts occur between the new drilled shafts and the existing piles. Otherwise, steel piles to be removed to 5' minimum below finished grade or to 5' below the bottom of the existing pile cap, whichever is deeper.
4. SW Gas will provide and install sleeve beneath approach slab and through opening in Abutment Wall, See Sheet S40.
5. Provide step reinforcing where concrete cover over top bars exceeds 4".

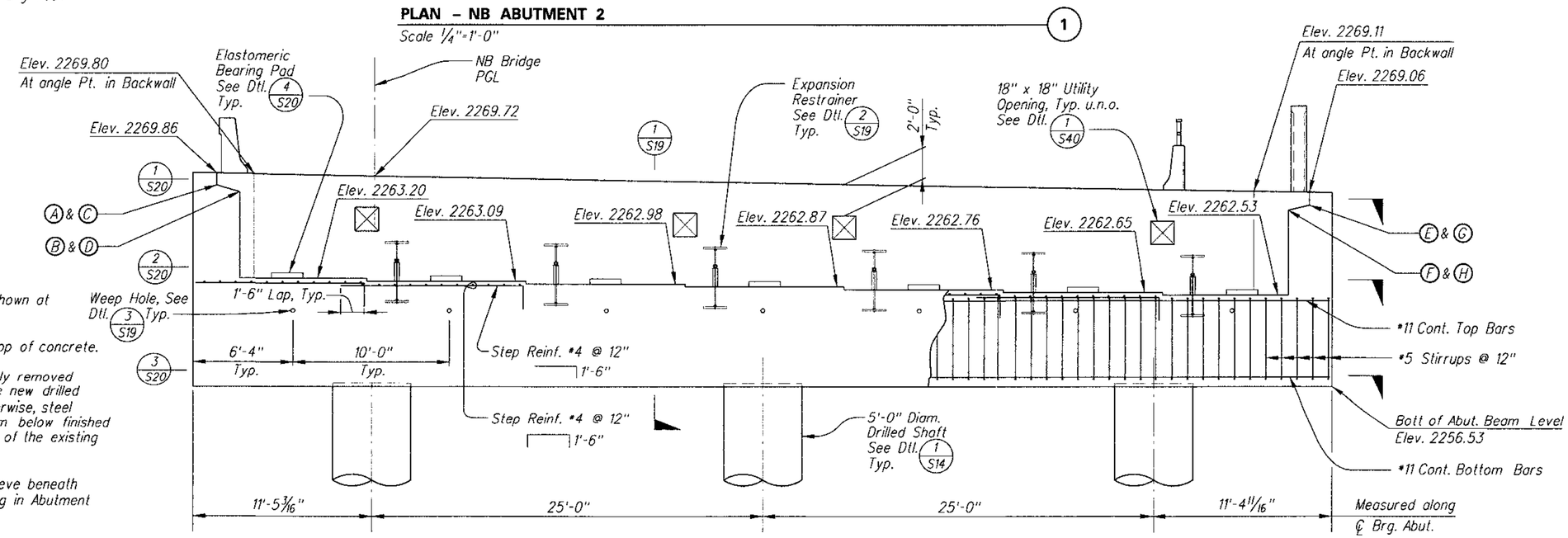

ELEVATION – NB ABUTMENT 2 (2)

Scale ¼"=1'-0"

Date: 08\20\09

File: C:\PWworking\PHX\dms42758\20S-B18.dgn

No.	Revision Description	Engineer	Date

Designed	FRM, SST	8/09
Drawn	SST, TRK	8/09
Checked	TWB	8/09
Proj. Engr.	TWB	8/09

Priscilla S. Cornelio, P.E. Director

Registered Professional Engineer, Certificate No. 29368, Ted W. Buell, Arizona, U.S.A. Expires 09-30-2010

HDR Engineering, Inc. 5210 East Williams Circle, Suite 530 Tucson, AZ 85711-4459 (520) 584-3600

Pima County Department of Transportation

NB ABUT 2 PLAN & ELEVATION
LA CHOLLA BOULEVARD BRIDGE
RUTHRAUFF RD. TO RIVER RD.
PROJECT NO. 4LCITR

Scales	Horiz. 1"= Vert. N/A	Sheet S18 of S58	Page 255 of 356

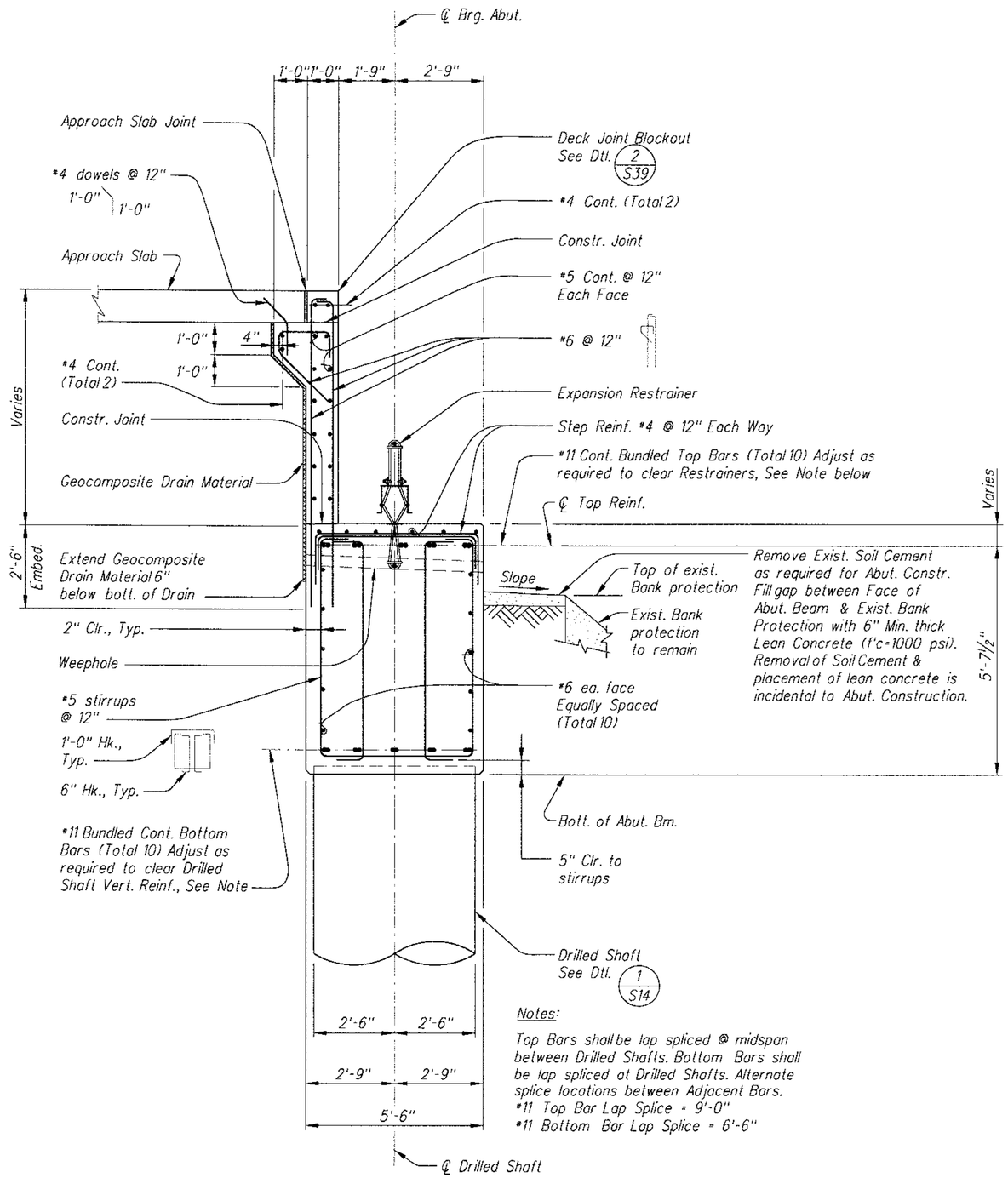

Notes:

Top Bars shall be lap spliced @ midspan between Drilled Shafts. Bottom Bars shall be lap spliced at Drilled Shafts. Alternate splice locations between Adjacent Bars.
*11 Top Bar Lap Splice = 9'-0"
*11 Bottom Bar Lap Splice = 6'-6"

SECTION – ABUTMENT (1)

Scale ½"=1'-0"

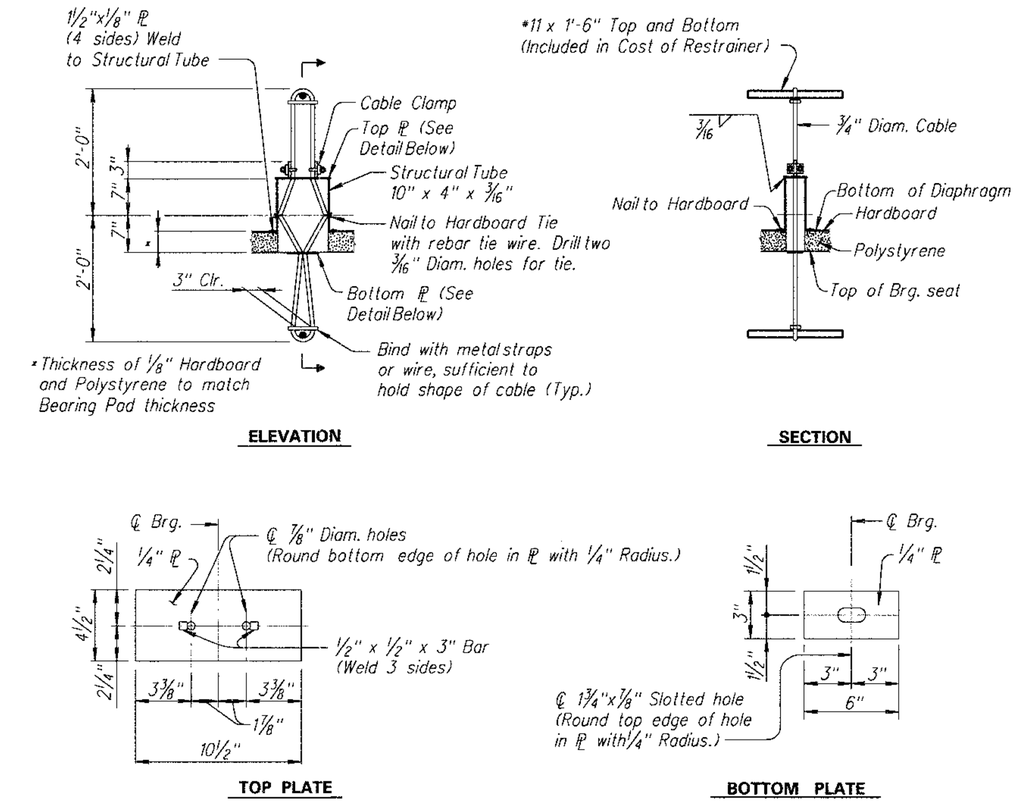

Notes:

1. Seal all openings in structural tube to prohibit concrete intrusion.
2. Restrainer Cables shall be ¾" diameter preformed 6x19 galvanized with the minimum breaking strength of 42 kips. One additional restrainer unit shall be furnished to the Engineer for testing.

EXPANSION RESTRAINER DETAIL (2)

No Scale

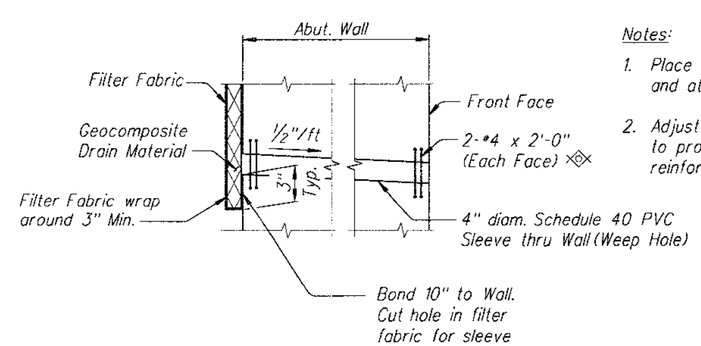

Notes:

1. Place weep holes perpendicular to wall and at a slope of ½" per foot.
2. Adjust weep hole location as required to provide 2" minimum clearance to reinforcing steel.

WEEP HOLE DETAIL (3)

No Scale

No.	Revision Description	Date	Engineer	Date	Designed	FRM, SST	8/09
					Drawn	SST	8/09
					Checked	TWB	8/09
					Proj. Engr.	TWB	8/09

Priscilla S. Cornelio, P.E. Director

Registered Professional Engineer, Certificate No. 29368, Ted W. Buell, Date Signed 8-5-09, Arizona U.S.A.
Expires 09-30-2010

HDR Engineering, Inc. 5210 East Williams Circle, Suite 530 Tucson, AZ 85711-4459 (520) 594-5600

Pima County Department of Transportation

ABUTMENT DETAILS
LA CHOLLA BOULEVARD BRIDGE
RUTHRAUFF RD. TO RIVER RD.
PROJECT NO. 4LCTR

Scales	Horiz. 1"= / Verl. N/A	Sheet S19 of S58	Page 256 of 356

Date: 08\20\09

File: C:\PWworking\PHX\dms42758\20S-B19.dgn

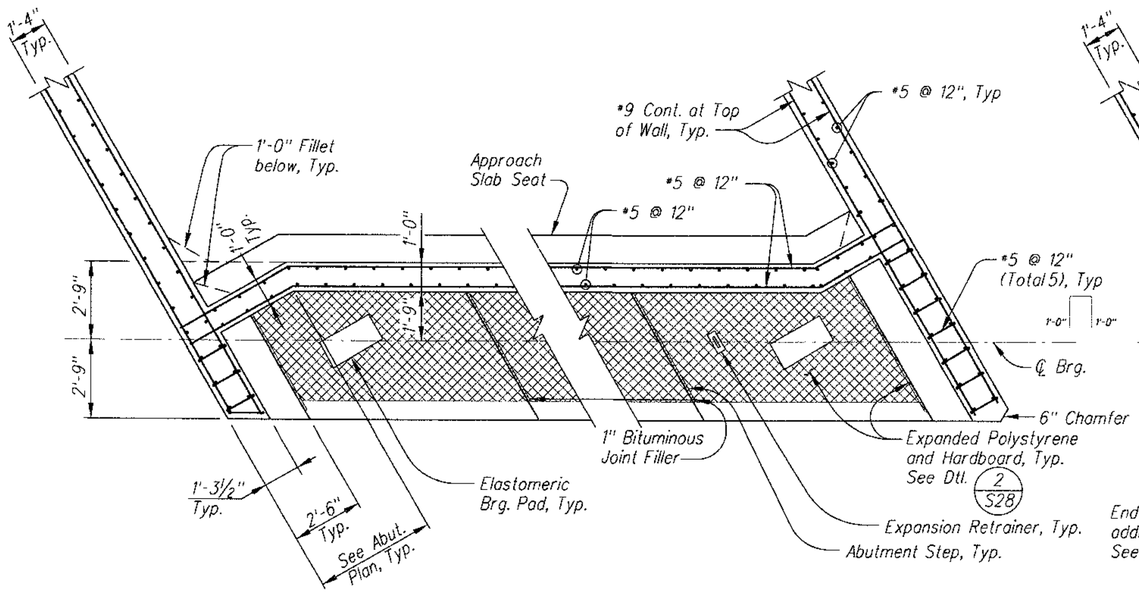

SECTION – ABUTMENT & WINGWALLS (1)

Scale ⅜"=1'-0"

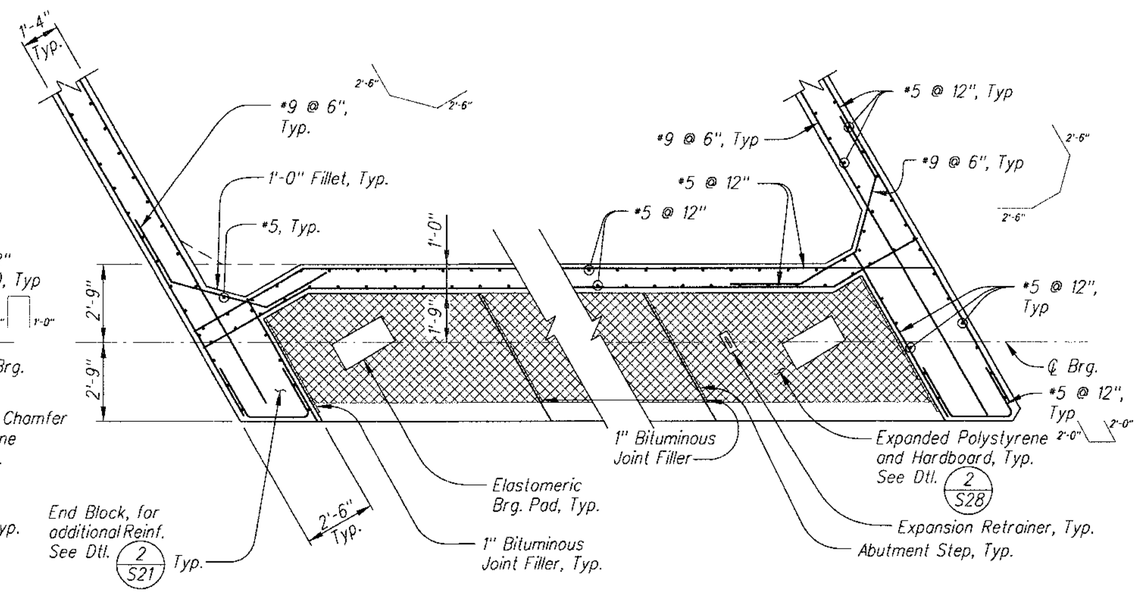

SECTION – ABUTMENT & WINGWALLS (2)

Scale ⅜"=1'-0"

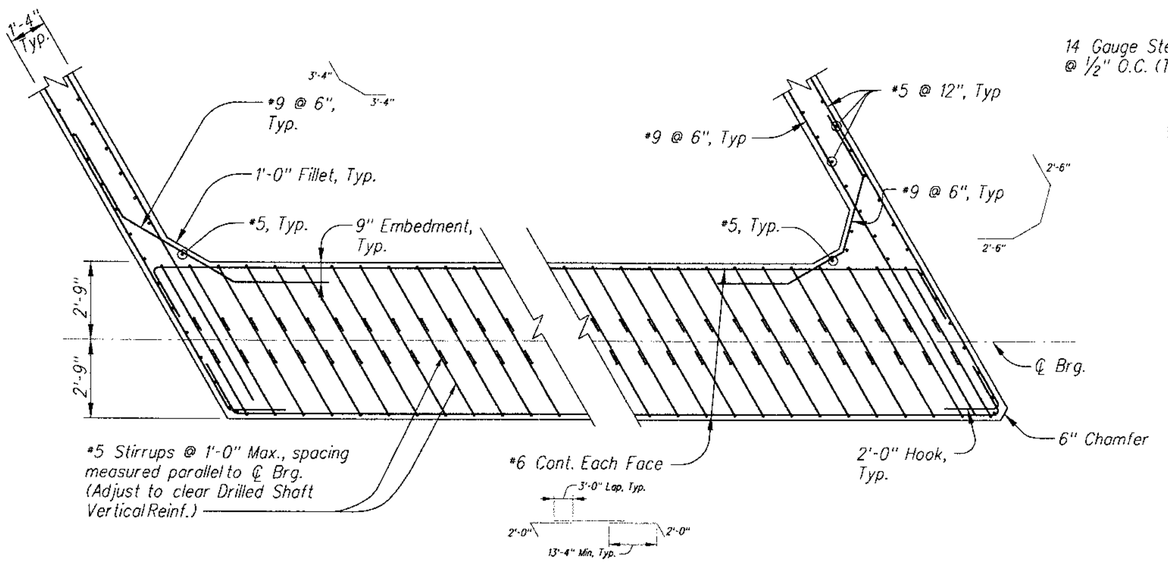

SECTION – ABUTMENT & WINGWALLS (3)

Scale ⅜"=1'-0"

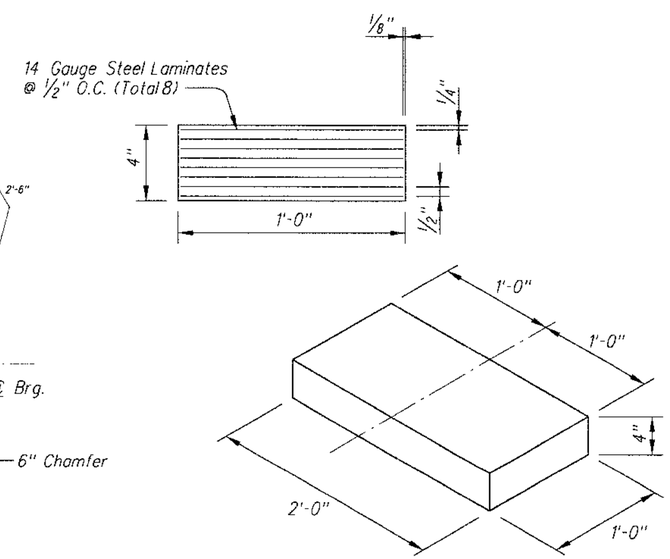

ELASTOMERIC BEARING PAD – ABUTMENTS (4)

No Scale

NOTES

1. Elastomer shall be 100% virgin polychloroprene with a Shear Modulus of 130 psi at 68° F and a Durometer hardness of 55.
2. Elastomeric Bearing Pads shall be reinforced with Steel Laminates as shown.
3. Bearing Design Parapeters:
   Design Method A
   Design Load 236 kip
4. Low Temperature Zone: A
5. Elastomer Grade: 0
6. For additional information, See Standard Specifications

No.	Revision Description	Engineer	Date

		Date
Designed	FRM, SST	8/09
Drawn	SST, TRK	8/09
Checked	TWB	8/09
Proj. Eng.	TWB	8/09

Priscilla S. Cornelio, P.E. Director

Registered Professional Engineer (Civil) CERTIFICATE NO. 29368 TED W. BUELL ARIZONA U.S.A.

Expires 09-30-2010

HDR Engineering, Inc. 5210 East Williams Circle, Suite 530 Tucson, AZ 85711-4459 (520) 594-3600

Pima County Department of Transportation

ABUTMENT DETAILS
LA CHOLLA BOULEVARD BRIDGE
RUTHRAUFF RD. TO RIVER RD.
PROJECT NO. 4LCTR

Scales	Horiz. 1"= Vert. N/A	Sheet S20 of S58	Page 257 of 356

Date: 08\20\09

File: C:\PWworking\PHX\dms42758\20S-B20.dgn

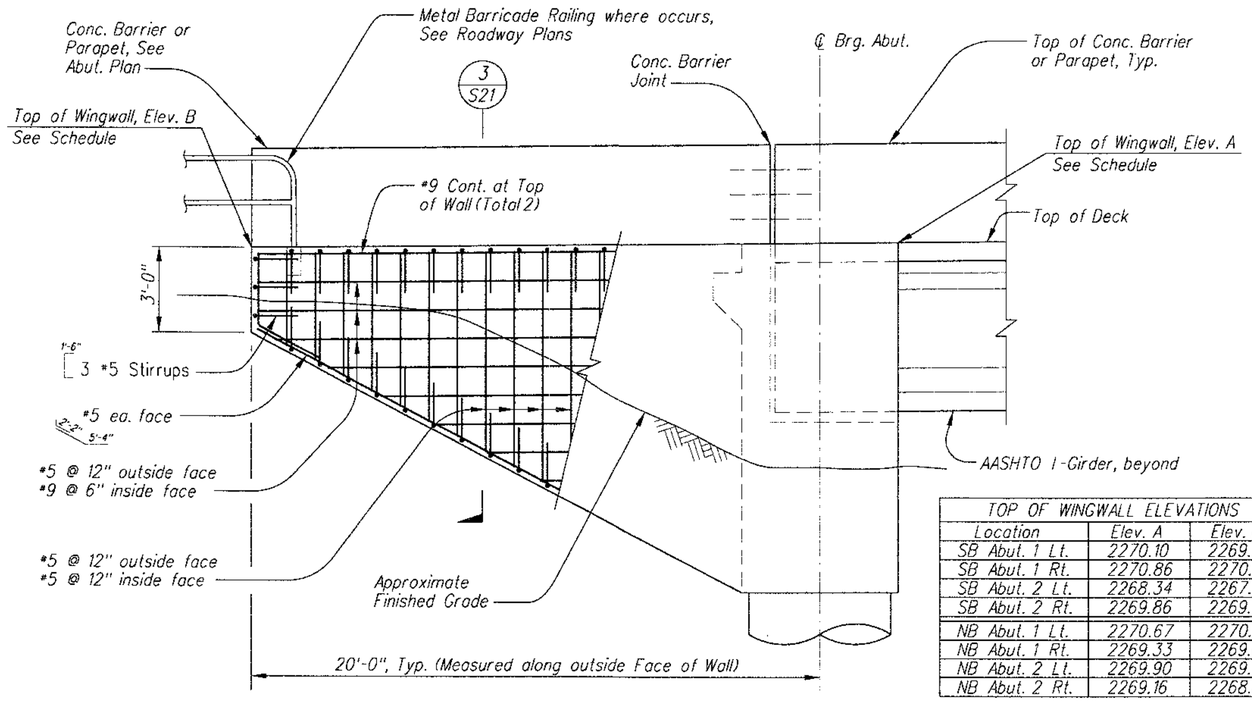

TOP OF WINGWALL ELEVATIONS		
Location	Elev. A	Elev. B
SB Abut. 1 Lt.	2270.10	2269.91
SB Abut. 1 Rt.	2270.86	2270.62
SB Abut. 2 Lt.	2268.34	2267.93
SB Abut. 2 Rt.	2269.86	2269.50
NB Abut. 1 Lt.	2270.67	2270.42
NB Abut. 1 Rt.	2269.33	2269.04
NB Abut. 2 Lt.	2269.90	2269.58
NB Abut. 2 Rt.	2269.16	2268.84

TYPICAL WINGWALL ELEVATION (1)

Scale 3/8"=1'-0"

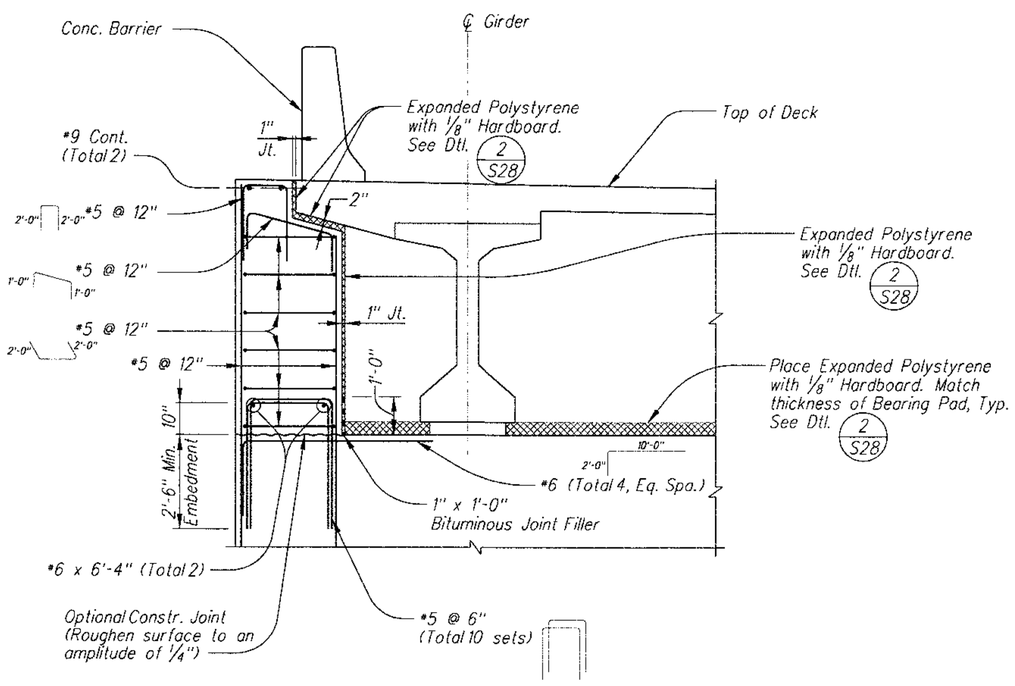

SECTION AT END BLOCK (2)

Scale 1/2"=1'-0"

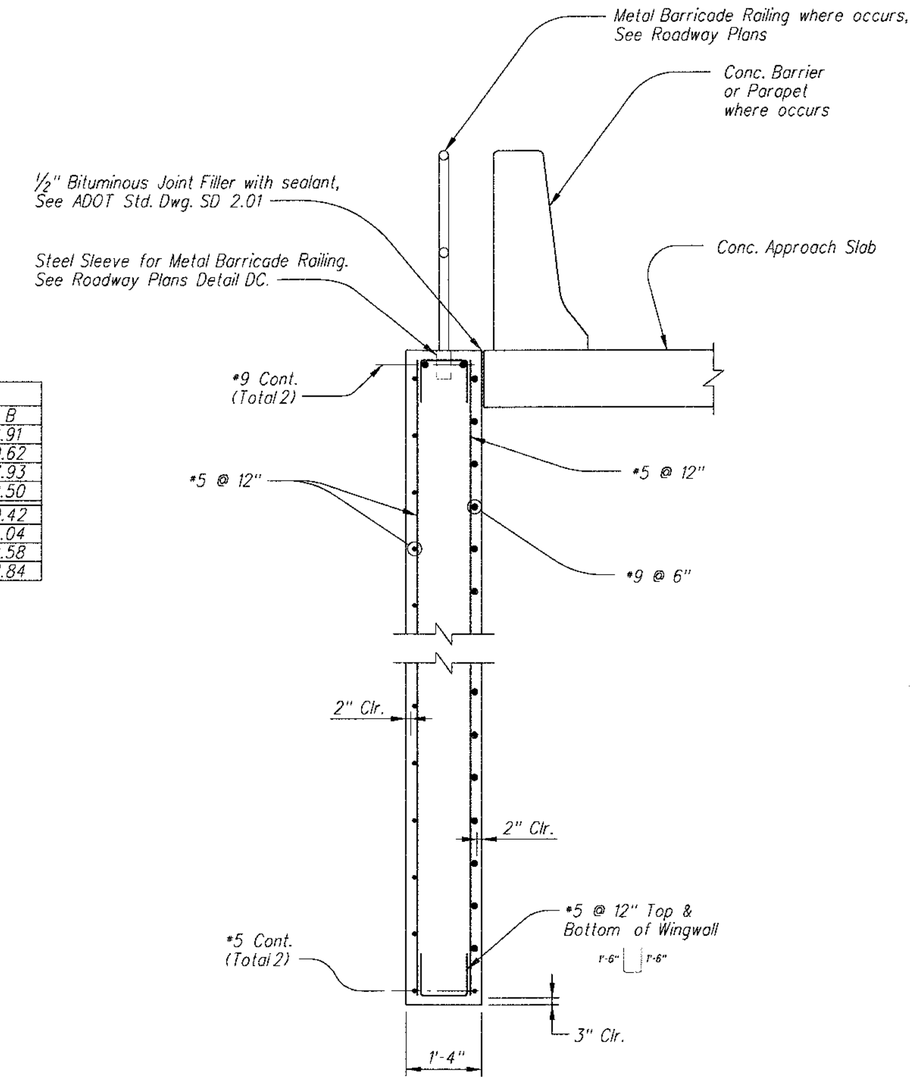

TYPICAL WINGWALL SECTION (3)

Scale 3/4"=1'-0"

Priscilla S. Cornelio, P.E. Director

No.	Revision Description	Engineer	Date

		Date
Designed	FRM, SST	8/09
Drawn	SST, TRK	8/09
Checked	TWB	8/09
Proj. Eng.	TWB	8/09

Registered Professional Engineer (Civil) CERTIFICATE NO. 29368 TED W. BUEHL Date Signed 8-20-09 ARIZONA U.S.A. Expires 09-30-2010

FDR
FDR Engineering, Inc.
5210 East Williams Circle, Suite 530
Tucson, AZ 85711-4459
(520) 584-3600

Pima County Department of Transportation

ABUTMENT DETAILS
LA CHOLLA BOULEVARD BRIDGE
RUTHRAUFF RD. TO RIVER RD.
PROJECT NO. 4LCITR

Scales	Horiz. 1"= Vert. N/A	Sheet S21 of S58	Page 258 of 356

Date: 08\20\09

File: C:\PWworking\PHX\dms42758\20S-B21.dgn

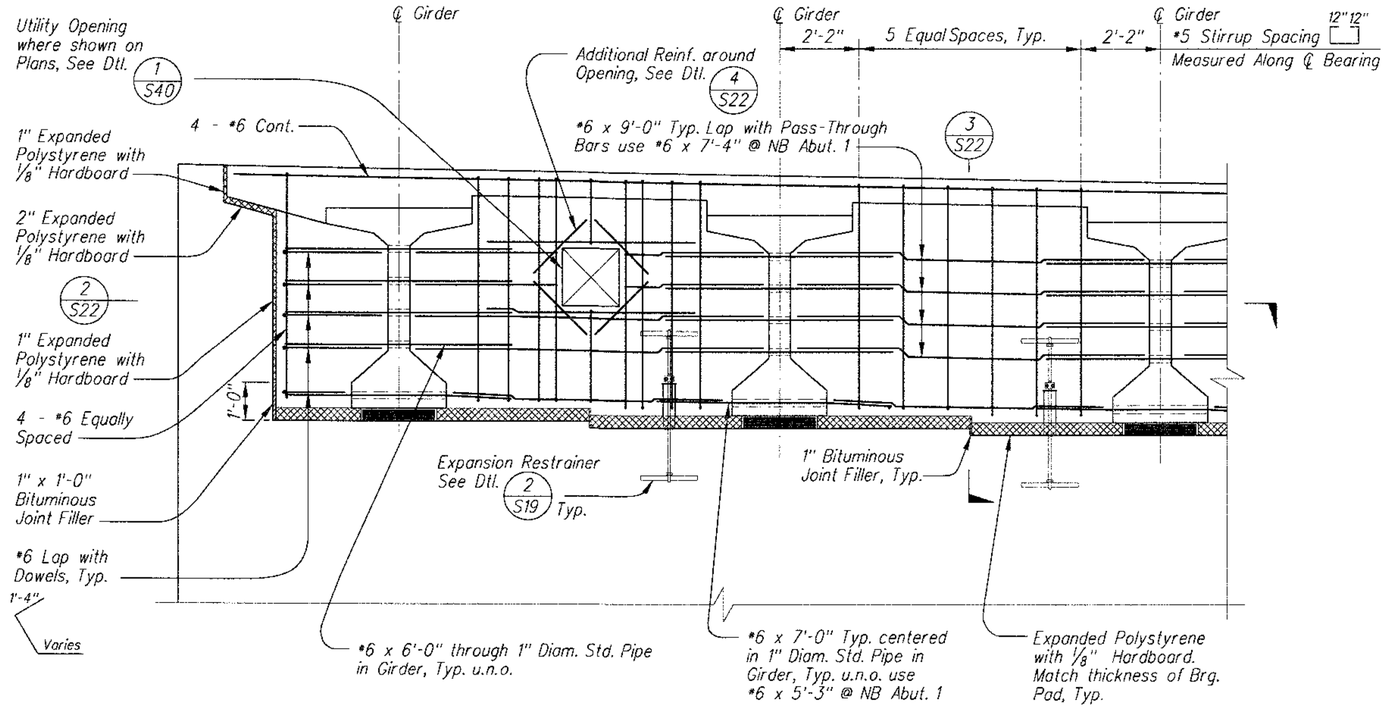

PARTIAL ELEVATION – ABUTMENT DIAPHRAGM (1)

Scale 1/2"=1'-0"

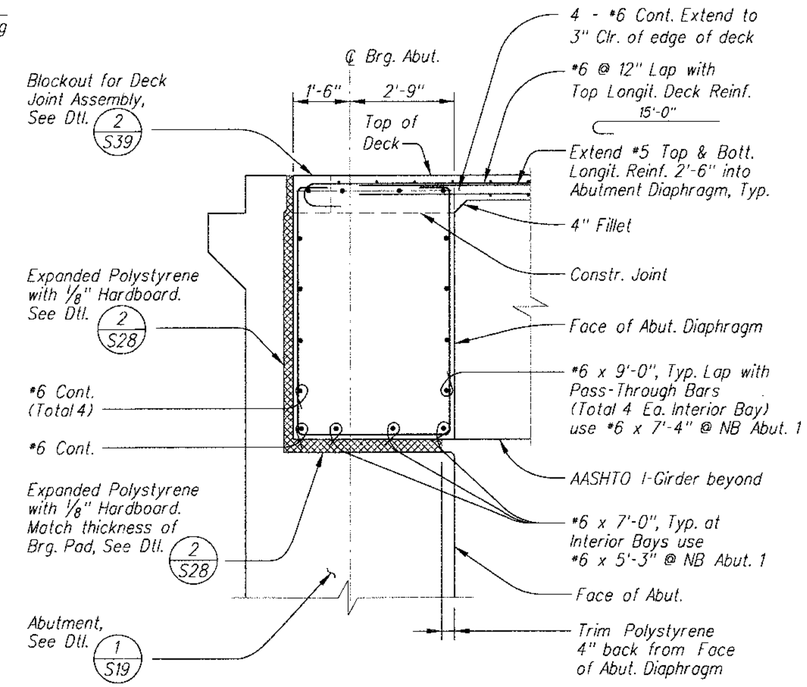

SECTION – ABUTMENT DIAPHRAGM (3)

Scale 1/2"=1'-0"

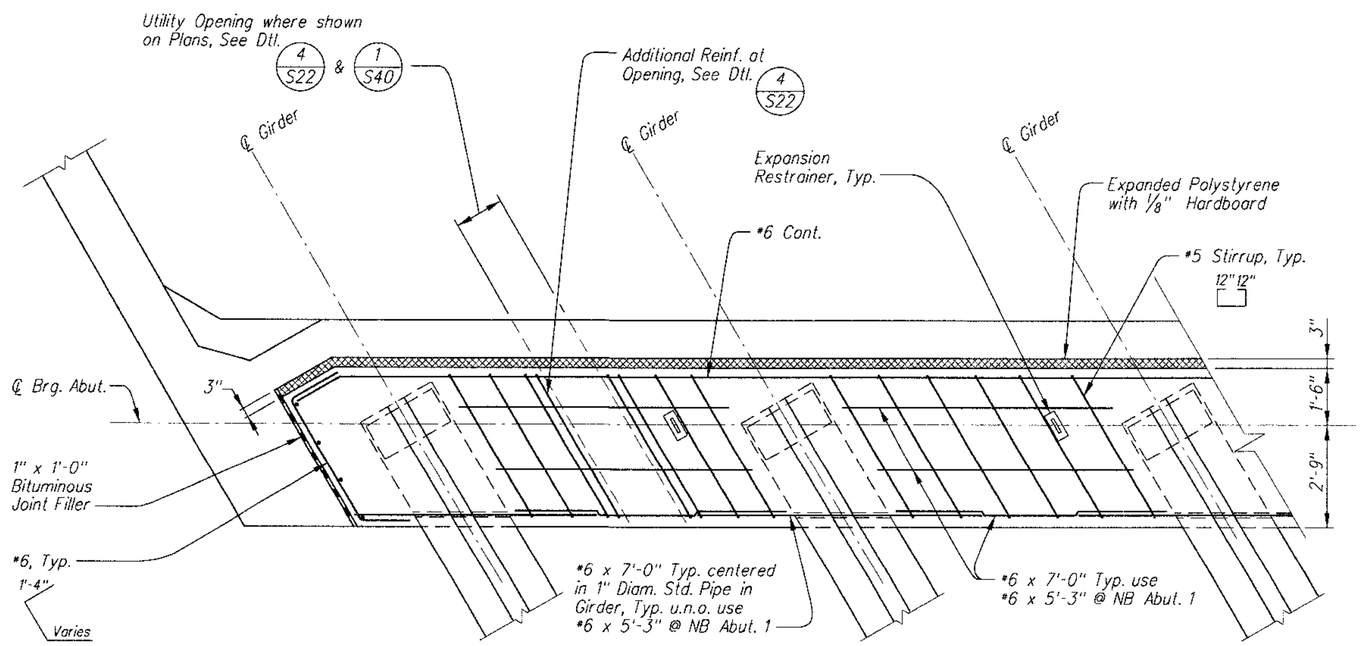

SECTION – ABUTMENT DIAPHRAGM (2)

Scale 1/2"=1'-0"

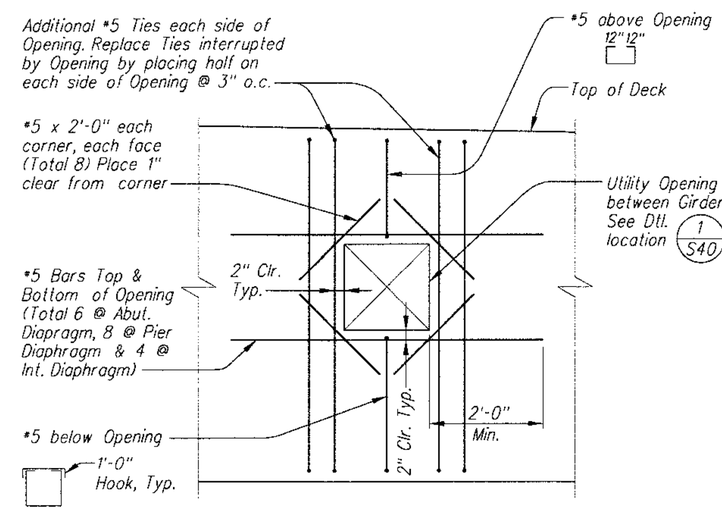

Note:

Reinf. shown in Abut. Diaphragm. Place similar Reinf. around openings in Abutment Backwall, Pier and intermediate diaphragms.

UTILITY OPENING REINFORCING DETAIL (4)

Scale 3/4"=1'-0"

No.	Revision Description	Engineer	Date

		Date
Designed	FRM, SST	8/09
Drawn	TRK, SST	8/09
Checked	TWB	8/09
Proj. Engr.	TWB	8/09

Priscilla S. Cornelio, P.E. Director

Registered Professional Engineer (Civil) CERTIFICATE NO. 29368 TED W. BUEL Date Signed 8-20-09 ARIZONA U.S.A.
Expires 09-30-2010

HDR Engineering, Inc. 5210 East Williams Circle, Suite 530 Tucson, AZ 85711-4459 (520) 584-3600

Pima County Department of Transportation

ABUTMENT DIAPHRAGM DETAILS
LA CHOLLA BOULEVARD BRIDGE
RUTHRAUFF RD. TO RIVER RD.
PROJECT NO. 4LCITR

Scales	Horiz. 1"= / Vert. N/A	Sheet S22 of S58	Page 259 of 356

Date: 08\20\09

File: C:\PWworking\PHX\dms42758\20S-B22.dgn

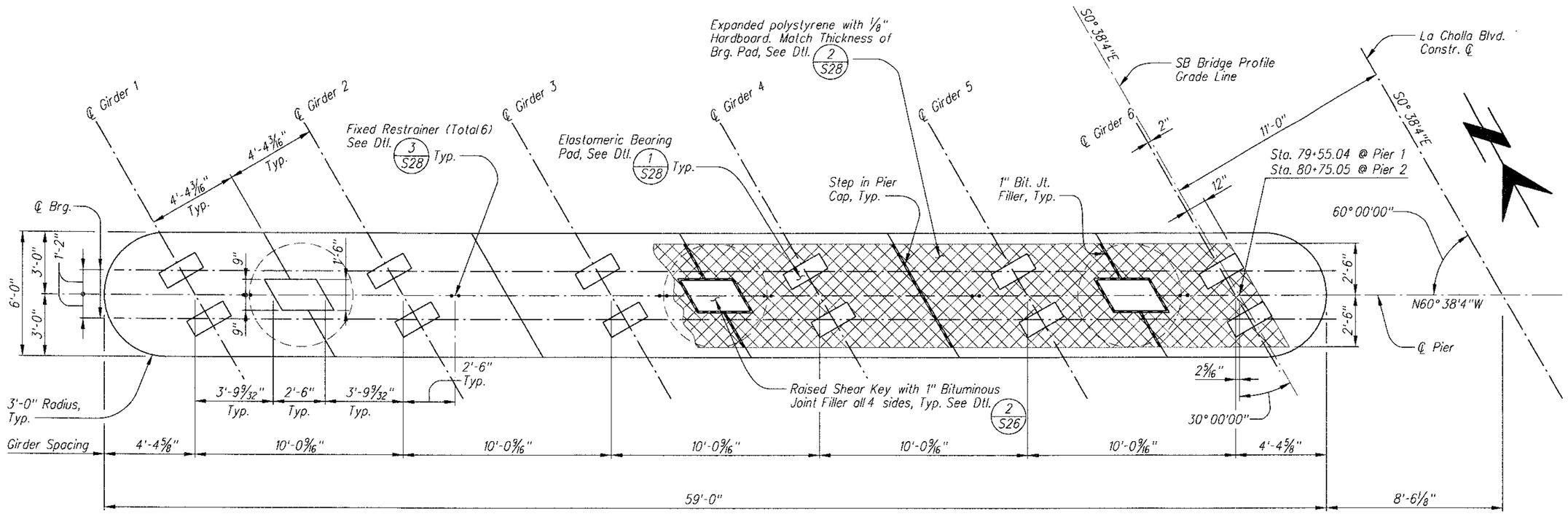

PLAN – SB PIERS 1 AND 2 (1)

Scale 3/8"=1'-0"

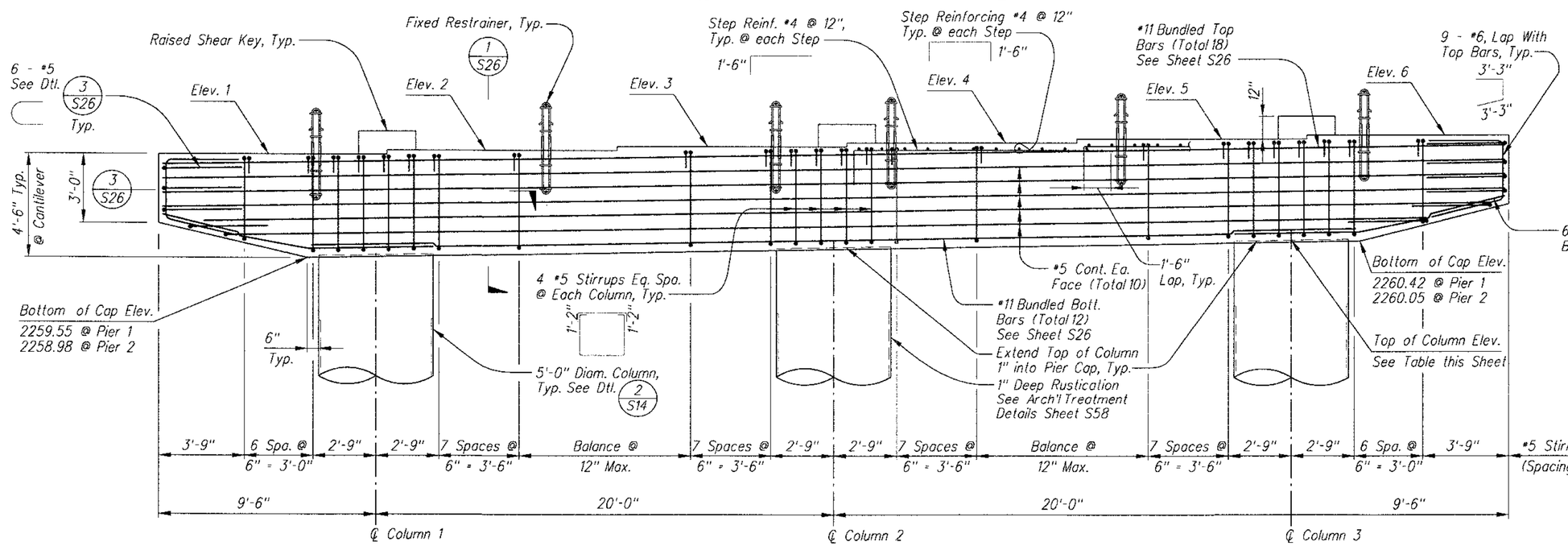

ELEVATION – SB PIERS 1 AND 2 (2)

Scale 3/8"=1'-0"

GIRDER STEP ELEVATIONS

Girder	Pier 1	Pier 2
Elev. 1	2264.05	2263.48
Elev. 2	2264.23	2263.70
Elev. 3	2264.40	2263.92
Elev. 4	2264.58	2264.13
Elev. 5	2264.75	2264.34
Elev. 6	2264.92	2264.55

TOP OF COLUMN ELEV.

Column	Pier 1	Pier 2
1	2259.69	2259.14
2	2260.07	2259.60
3	2260.44	2260.07

Scales	Horiz. 1"= / Vert. N/A	Sheet S23 of S58	Page 260 of 356

Pima County Department of Transportation

Priscilla S. Cornelio, P.E. Director

No.	Revision Description	Engineer	Date

		Date
Designed	ERM	8/09
Drawn	ERM, TRK	8/09
Checked	MJD	8/09
Proj. Engr.	TWB	8/09

Registered Professional Engineer — Certificate No. 29368 — Ted W. Buelli — Arizona U.S.A. — Expires 09-30-2010

HDR Engineering, Inc. 5210 East Williams Circle, Suite 530 Tucson, AZ 85711-4459 (520) 584-3600

SB PIERS PLAN & ELEVATION
LA CHOLLA BOULEVARD BRIDGE
RUTHRAUFF RD. TO RIVER RD.
PROJECT NO. 4LCITR

Date: 08\20\09

File: C:\PWworking\PHX\dms42758\20S-B23.dgn

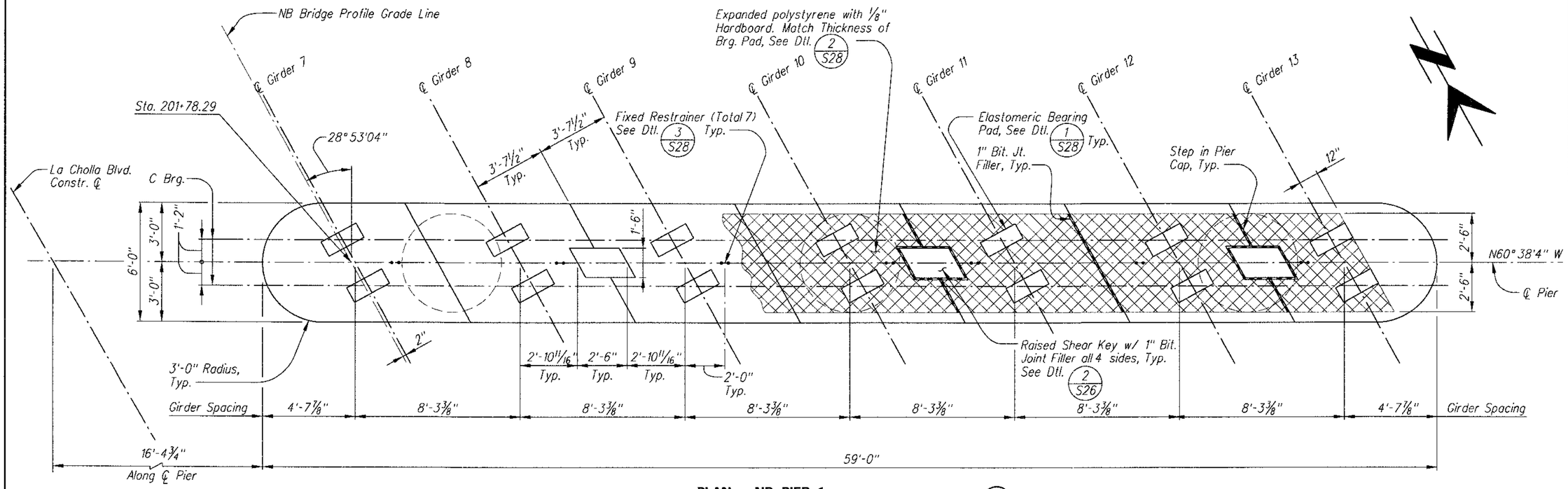

PLAN – NB PIER 1 (1)

Scale 3/8"=1'-0"

GIRDER STEP ELEVATIONS	
Girder	Pier 1
Elev. 7	2264.75
Elev. 8	2264.59
Elev. 9	2264.44
Elev. 10	2264.28
Elev. 11	2264.13
Elev. 12	2263.97
Elev. 13	2263.81

TOP OF COLUMN ELEV.	
Column	Pier 1
1	2260.27
2	2259.86
3	2259.45

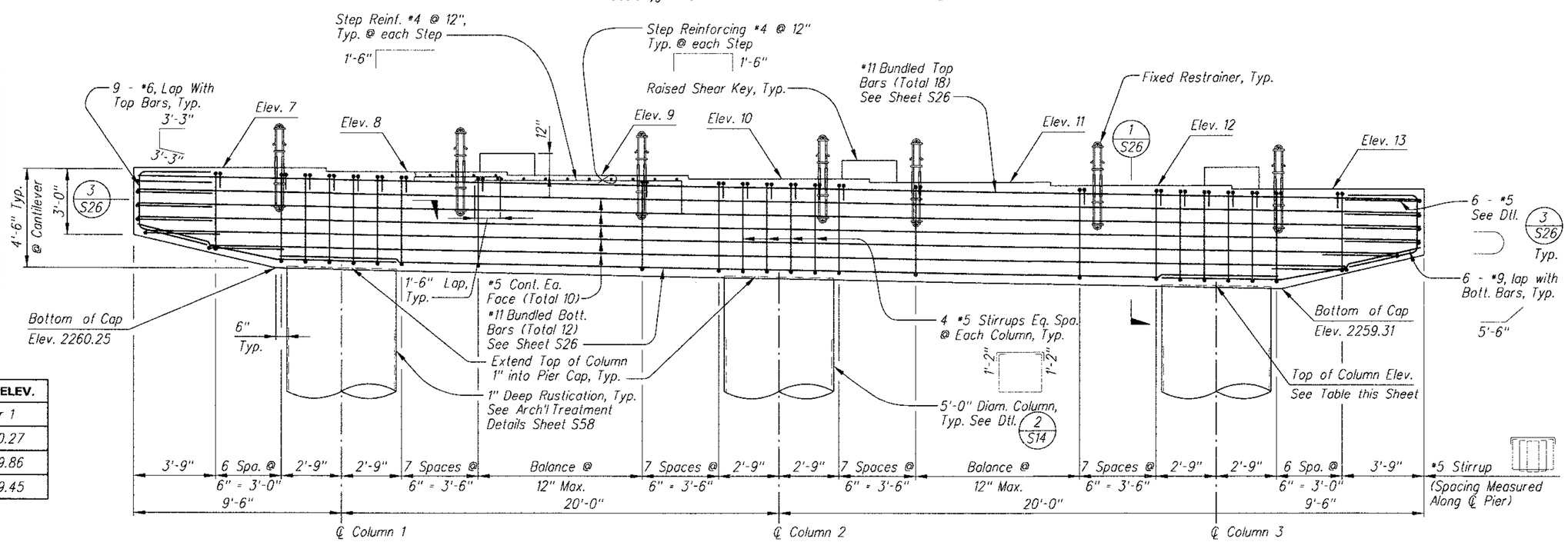

ELEVATION – NB PIER 1 (2)

Scale 3/8"=1'-0"

No.	Revision Description	Engineer	Date

		Date
Designed	ERM	8/09
Drawn	ERM, TRK	8/09
Checked	MJD	8/09
Proj. Engr.	TWB	8/09

Priscilla S. Cornelio, P.E. Director

Registered Professional Engineer — Certificate No. 29368 — Ted W. Buelna — Arizona U.S.A. — Expires 09-30-2010

HDR Engineering, Inc. 5210 East Williams Circle, Suite 530 Tucson, AZ 85711-4459 (520) 394-3600

Pima County Department of Transportation

NB PIER 1 PLAN & ELEVATION
LA CHOLLA BOULEVARD BRIDGE
RUTHRAUFF RD. TO RIVER RD.
PROJECT NO. 4LCITR

Scales	Horiz. 1"= Vert. N/A	Sheet S24 of S58	Page 261 of 356

Date: 08\20\09

File: C:\PWworking\PHX\dms42758\20S-B24.dgn

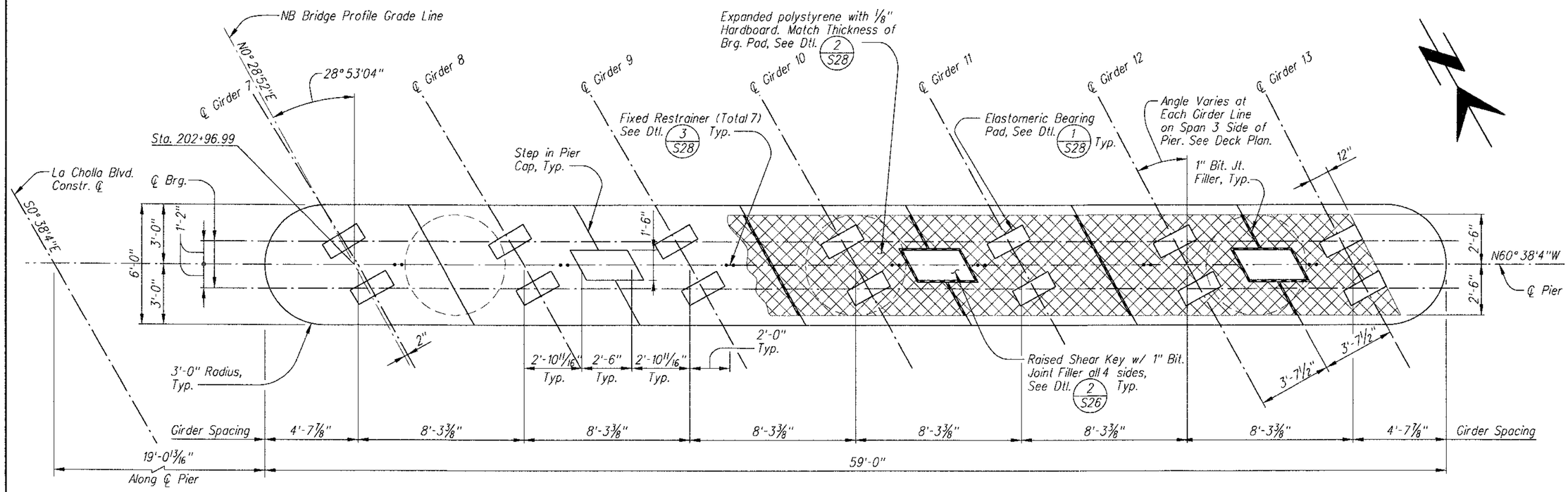

PLAN – NB PIER 2 (1)

Scale 3/8"=1'-0"

GIRDER STEP ELEVATIONS	
Girder	Pier 2
Elev. 7	2264.49
Elev. 8	2264.37
Elev. 9	2264.24
Elev. 10	2264.12
Elev. 11	2264.00
Elev. 12	2263.87
Elev. 13	2263.75

TOP OF COLUMN ELEV.	
Column	Pier 2
1	2260.02
2	2259.70
3	2259.38

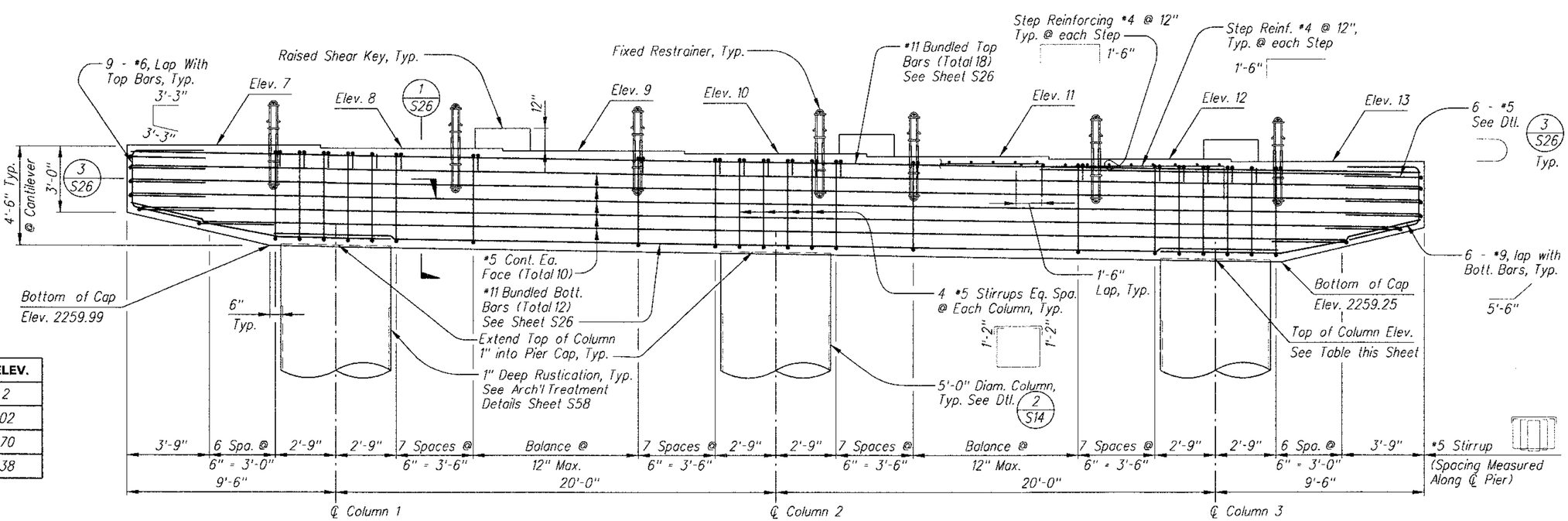

ELEVATION – NB PIER 2 (2)

Scale 3/8"=1'-0"

No.	Revision Description	Engineer	Date

Priscilla S. Cornelio, P.E. Director

		Date
Designed	FRM	8/09
Drawn	FRM, TRK	8/09
Checked	MJD	8/09
Proj. Engr.	TWB	8/09

Registered Professional Engineer — Certificate No. 29368 — Ted W. Buelna — Date Signed 8-3-09 — Arizona U.S.A.

Expires 09-30-2010

HDR Engineering, Inc.
5210 East Williams Circle, Suite 530
Tucson, AZ 85711-4459
(520) 584-3600

Pima County Department of Transportation

NB PIER 2 PLAN & ELEVATION
LA CHOLLA BOULEVARD BRIDGE
RUTHRAUFF RD. TO RIVER RD.
PROJECT NO. 4LCITR

Date: 08\20\09

File: C:\PWworking\PHX\dms42758\20S-B25.dgn

Scales	Horiz. 1"= / Vert. N/A	Sheet S25 of S58	Page 262 of 356

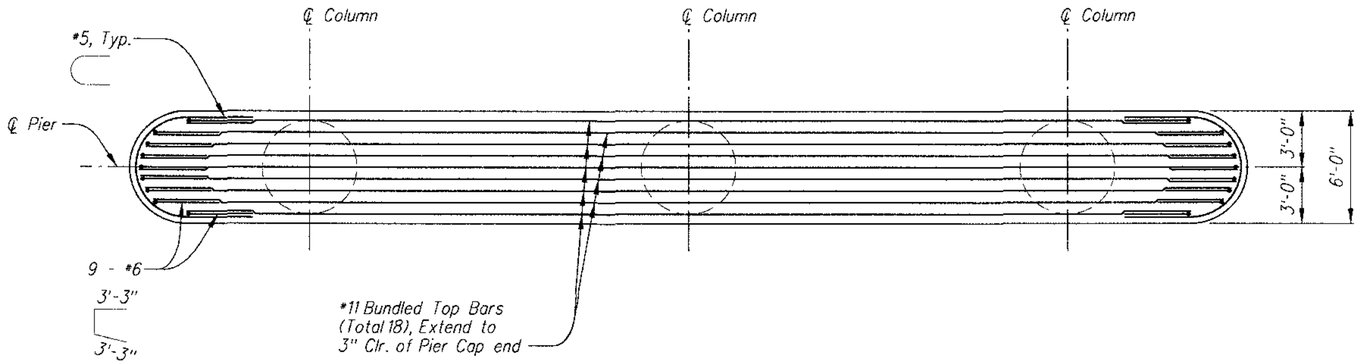

TOP OF PIER CAP

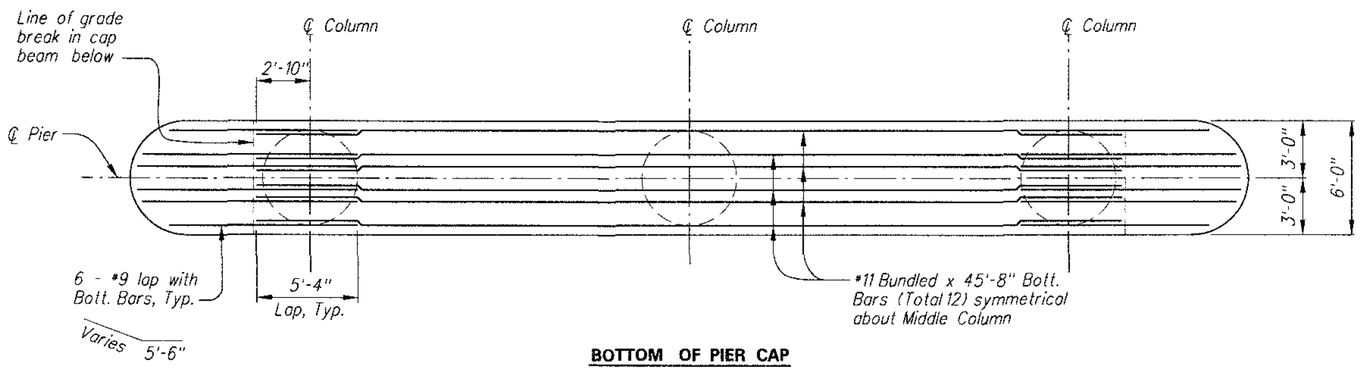

BOTTOM OF PIER CAP

BAR PLACEMENT DIAGRAM

Scale 1/4"=1'-0"

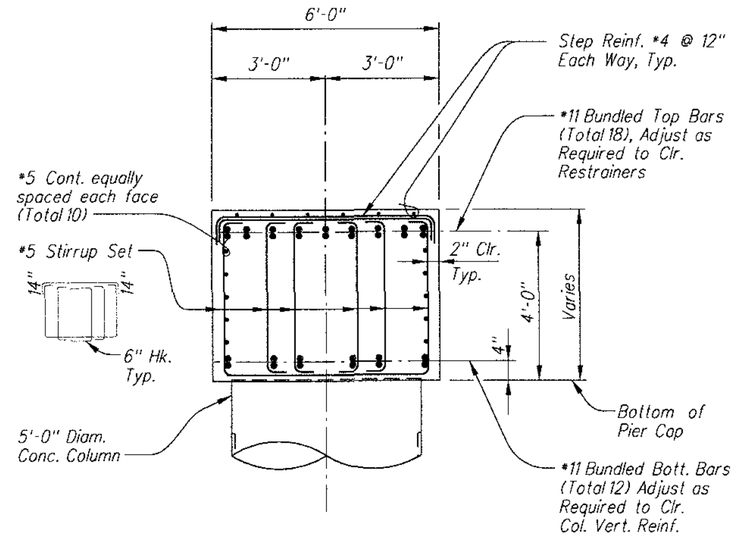

Note:
Restrainers not shown for clarity.

SECTION – PIER CAP (1)

Scale 1/2"=1'-0"

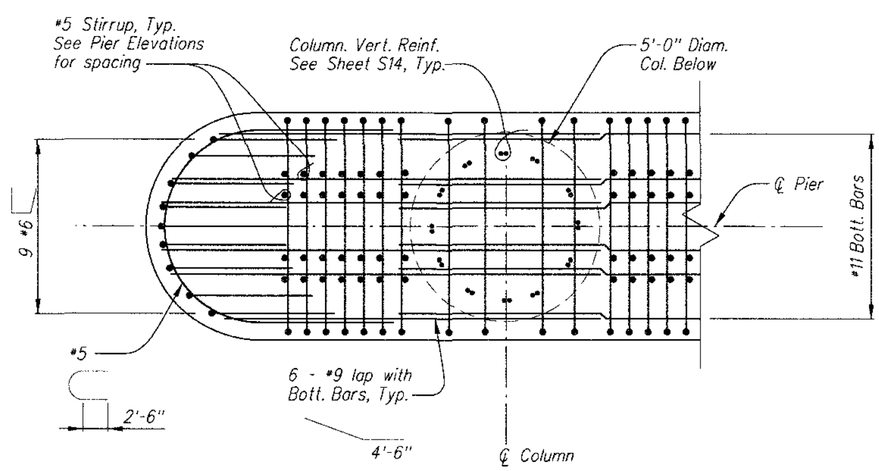

SECTION – PIER CAP END REINFORCING (3)

Scale 1/2"=1'-0"

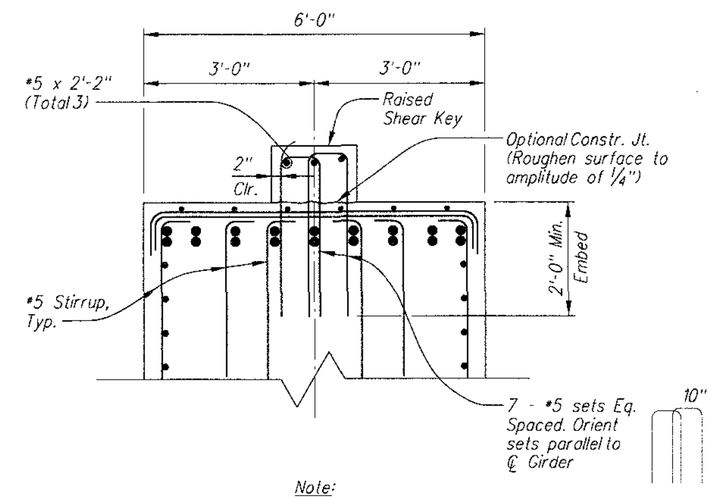

Note:
See section 1 for details not shown

SECTION – PIER CAP @ SHEAR KEY (2)

Scale 3/4"=1'-0"

No.	Revision Description	Engineer	Date

		Date
Designed	ERM	8/09
Drawn	ERM, TRK	8/09
Checked	MJD	8/09
Proj. Engr.	TWB	8/09

Priscilla S. Cornelio, P.E. Director

Registered Professional Engineer, Certificate No. 29368, Ted W. Buell, Arizona U.S.A.

Expires 09-30-2010

HDR

HDR Engineering, Inc.
5210 East Williams Circle, Suite 530
Tucson, AZ 85711-4459
(520) 594-3600

Pima County Department of Transportation

PIER DETAILS
LA CHOLLA BOULEVARD BRIDGE
RUTHRAUFF RD. TO RIVER RD.
PROJECT NO. 4LCTR

Scales	Horiz. 1"= Vert. N/A	Sheet S26 of S58	Page 263 of 356

Date: 08\20\09

File: C:\PWworking\PHX\dms42758\20S-B26.dgn

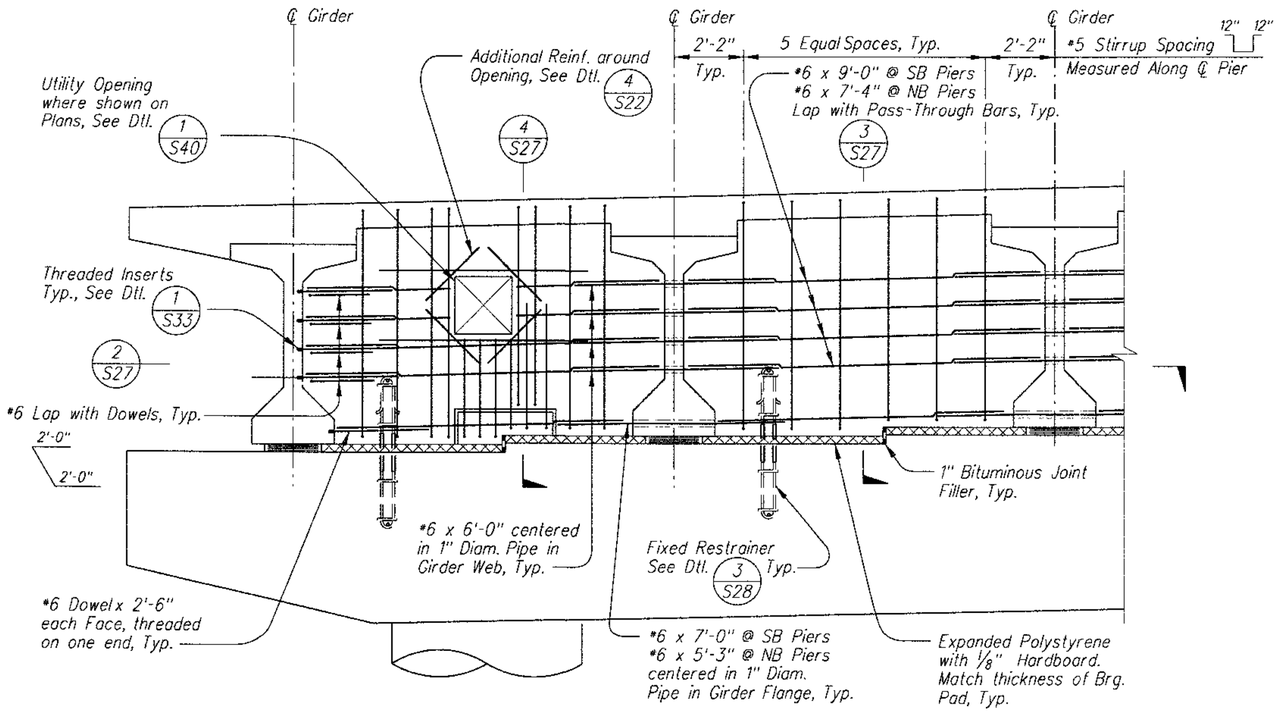

PARTIAL ELEVATION – PIER DIAPHRAGM (1)

Scale 1/2"=1'-0"

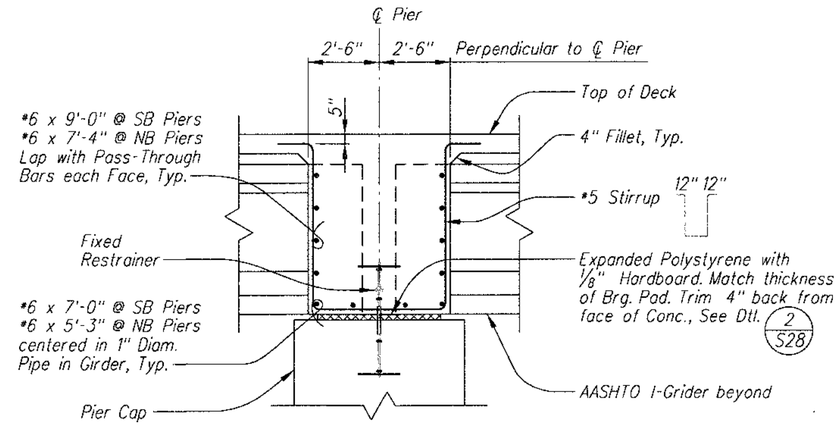

SECTION – PIER DIAPHRAGM (3)

Scale 3/8"=1'-0"

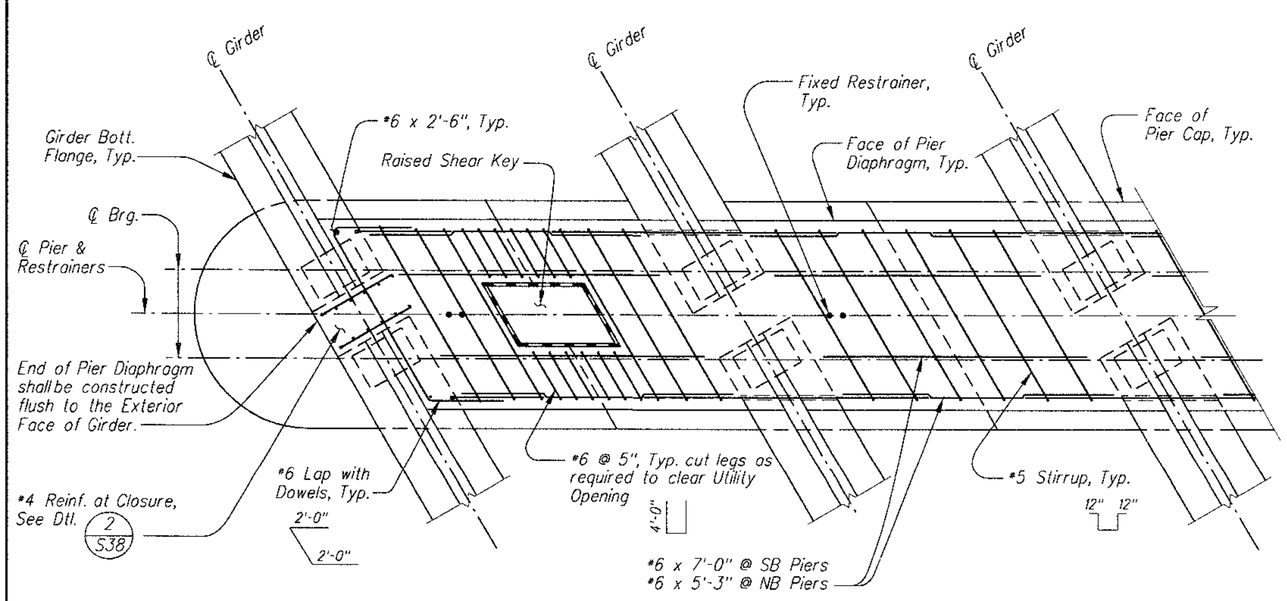

PARTIAL PLAN – PIER DIAPHRAGM (2)

Scale 1/2"=1'-0"

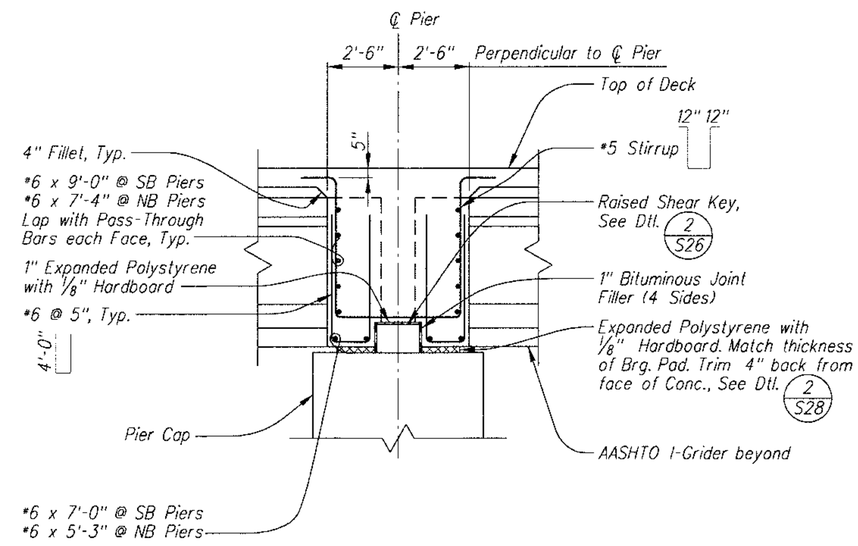

SECTION – PIER DIAPHRAM AT SHEAR KEY (4)

Scale 3/8"=1'-0"

No.	Revision Description	Engineer	Date

		Date
Designed	FRM	8/09
Drawn	ERM, TRK	8/09
Checked	MJD	8/09
Proj. Engr.	TWB	8/09

Priscilla S. Cornelio, P.E. Director

Registered Professional Engineer, Certificate No. 29368, Ted W. Buell, Arizona U.S.A.

Expires 09-30-2010

HDR Engineering, Inc.
5210 East Williams Circle, Suite 530
Tucson, AZ 85711-4459
(520) 594-3600

Pima County Department of Transportation

PIER DIAPHRAGM DETAILS
LA CHOLLA BOULEVARD BRIDGE
RUTHRAUFF RD. TO RIVER RD.
PROJECT NO. 4LCTR

Date: 08\20\09

File: C:\PWworking\PHX\dms42758\20S-B27.dgn

Scales	Horiz. 1"= Vert. N/A	Sheet S27 of S58	Page 264 of 356

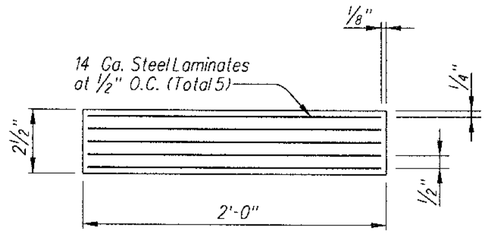

Notes:

1. Elastomer shall have a shear modulus of 160 psi at 73° F and a Durometer hardness of 60.
2. Elastomeric Brg. Pads shall be reinforced with steel.
3. Bearing Design Parameters:
   Design Method A
   Design Load = 240 Kips
   Low Temperature Zone A
   Elastomer Grade 0
4. For additional information, see Std. Specifications.

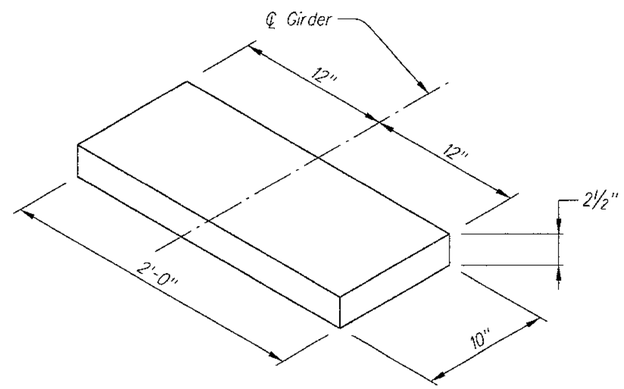

ELASTOMERIC BEARING PAD DETAIL – PIERS (1)

No Scale

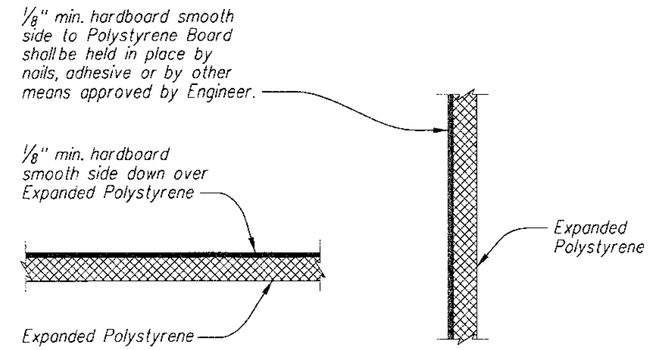

PROTECTION OF HORIZONTAL POLYSTYRENE

PROTECTION OF VERTICAL POLYSTYRENE

Note:

1. Hardboard to be used on any polystyrene face against which concrete is to be placed.

POLYSTYRENE PROTECTION DETAIL (2)

No Scale

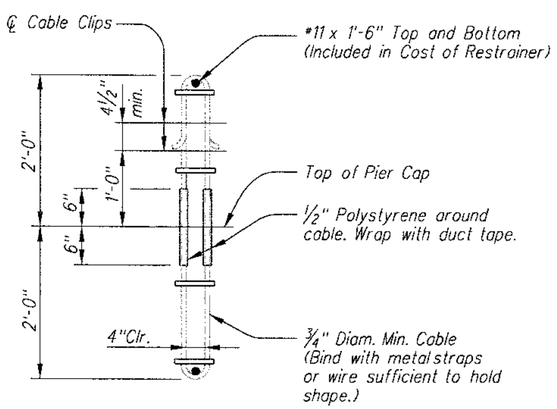

Note:

Restrainer Cables shall be 3/4" Diam. preformed 6x19 galvanized with the minimun breaking strength of 42 Kips. One additional restrainer unit shall be furnished to the Engineer for testing.

FIXED RESTRAINER DETAIL (3)

No Scale

Priscilla S. Cornelio, P.E. Director

No.	Revision Description	Engineer	Date	Designed	Drawn	Checked	Proj. Engr.	Date
				FRM, SST	TRK	TWB	TWB	8/09 8/09 8/09 8/09

Expires 09-30-2010

HDR Engineering, Inc.
5210 East Williams Circle, Suite 530
Tucson, AZ 85711-4459
(520) 594-3600

Pima County Department of Transportation

PIER DETAILS
LA CHOLLA BOULEVARD BRIDGE
RUTHRAUFF RD. TO RIVER RD.
PROJECT NO. 4LCITR

Scales	Horiz. 1"= / Verl. N/A	Sheet S28 of S58	Page 265 of 356

Date: 08\20\09

File: C:\PWworking\PHX\dms42758\20S-B28.dgn

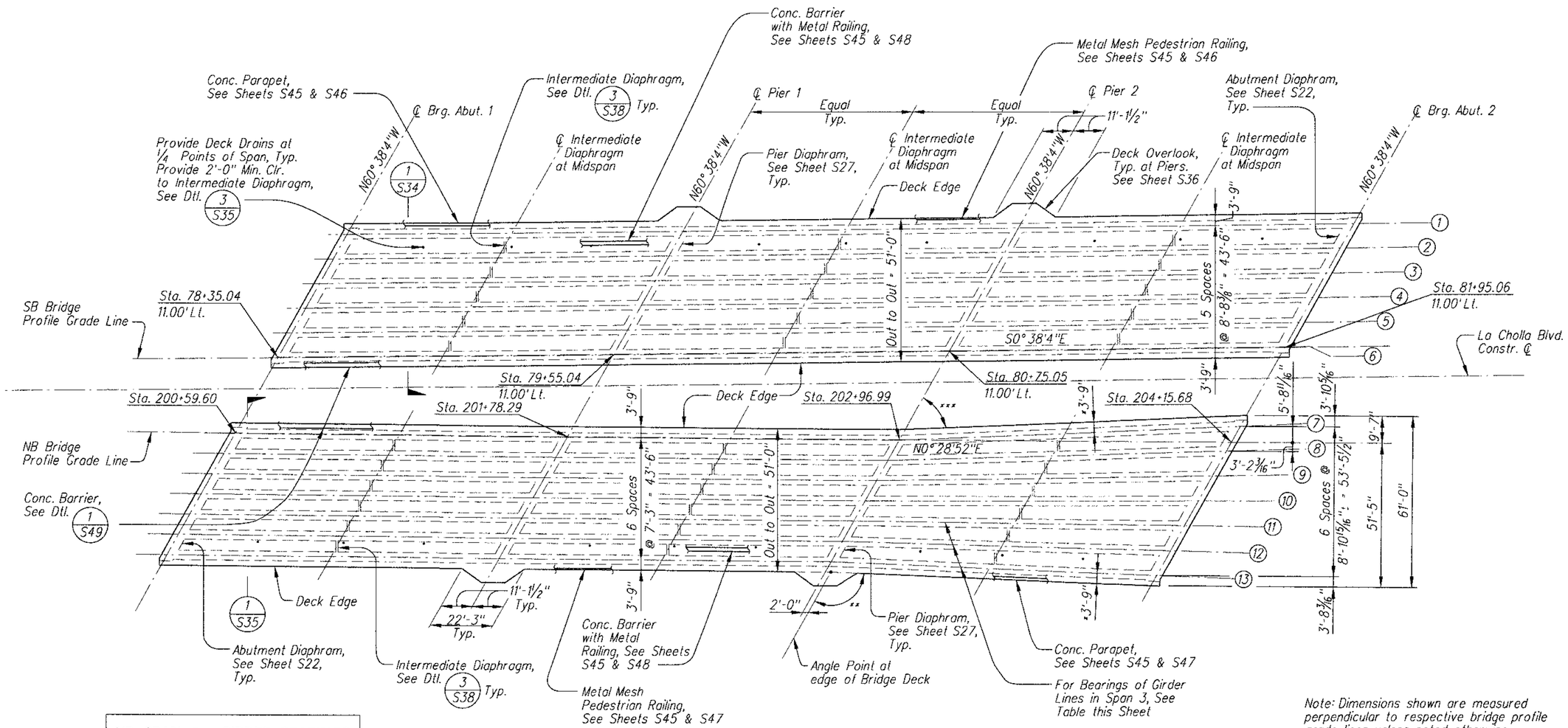

DECK PLAN
Scale 1" = 20'-0"

NB SPAN 3 - GIRDER BEARINGS	
Girder Line 7	N 2°17'8" W
Girder Line 8	N 1°31'24" W
Girder Line 9	N 0°44'49" W
Girder Line 10	N 0°2'31" E
Girder Line 11	N 0°50'35" E
Girder Line 12	N 1°39'24" E
Girder Line 13	N 2°28'55" E

Note: Dimensions shown are measured perpendicular to respective bridge profile grade lines unless noted otherwise.

* Measured perpendicular to edge of deck

** Angle between ℄ Pier 2 and east edge of NB deck in Span 3 = 116°53'00"

*** Angle between ℄ Pier 2 and west edge of NB deck in Span 3 = 58°20'56"

Priscilla S. Cornelio, P.E. Director

No.	Revision Description	Engineer	Date

		Date
Designed	FRM, SST	8/09
Drawn	TRK	8/09
Checked	TWB	8/09
Proj. Engr.	TWB	8/09

Registered Professional Engineer — Certificate No. 29368 — Ted W. Buehl — Arizona U.S.A.
Expires 09-30-2010

HDR Engineering, Inc.
5210 East Williams Circle, Suite 530
Tucson, AZ 85711-4459
(520) 584-3600

Pima County Department of Transportation

DECK PLAN
LA CHOLLA BOULEVARD BRIDGE
RUTHRAUFF RD. TO RIVER RD.
PROJECT NO. 4LCTR

Scales	Horiz. 1"= Vert. N/A	Sheet S29 of S58	Page 266 of 356

Date: 08\20\09

File: C:\PWworking\PHX\dms42758\20S-B29.dgn

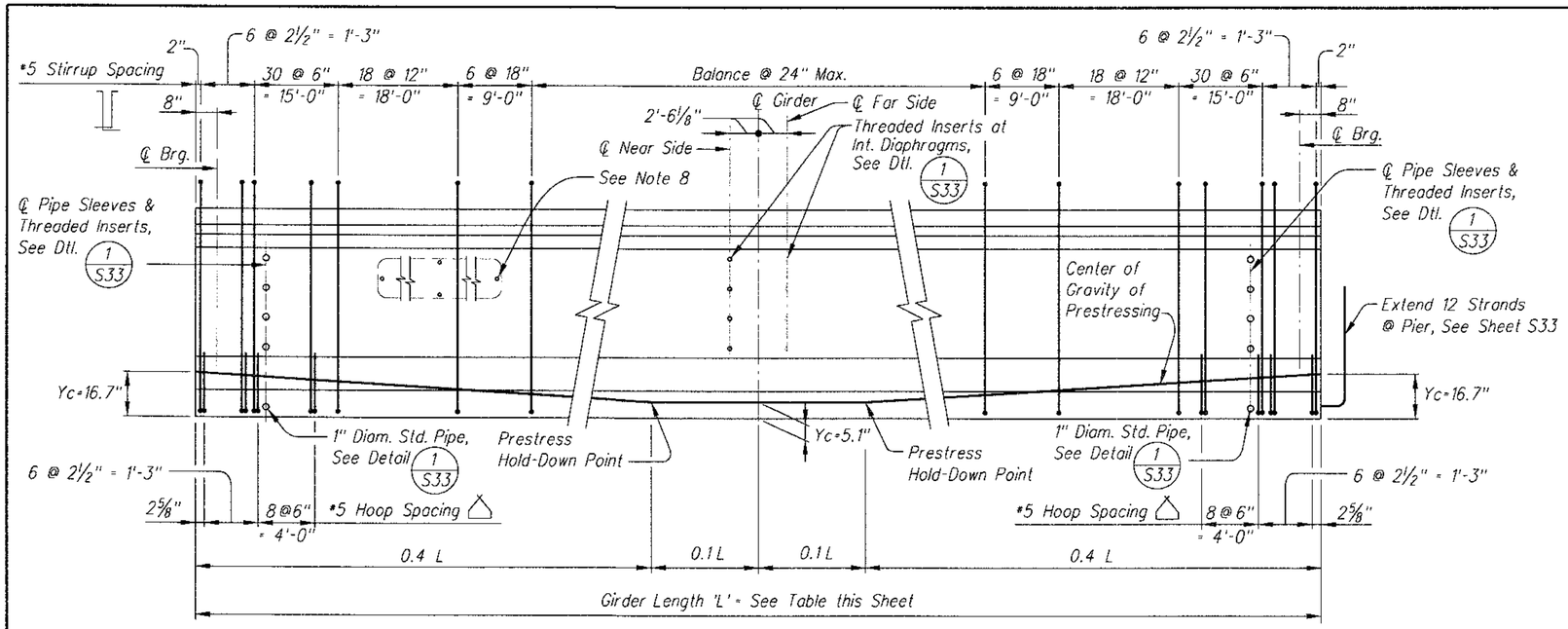

SB GIRDER ELEVATION

No Scale

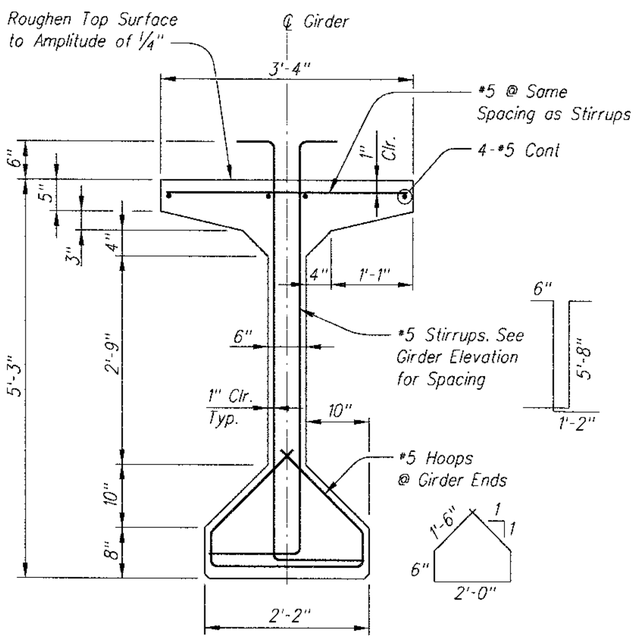

Note:
Strands not shown for clarity.

AASHTO TYPE V MODIFIED GIRDER

No Scale

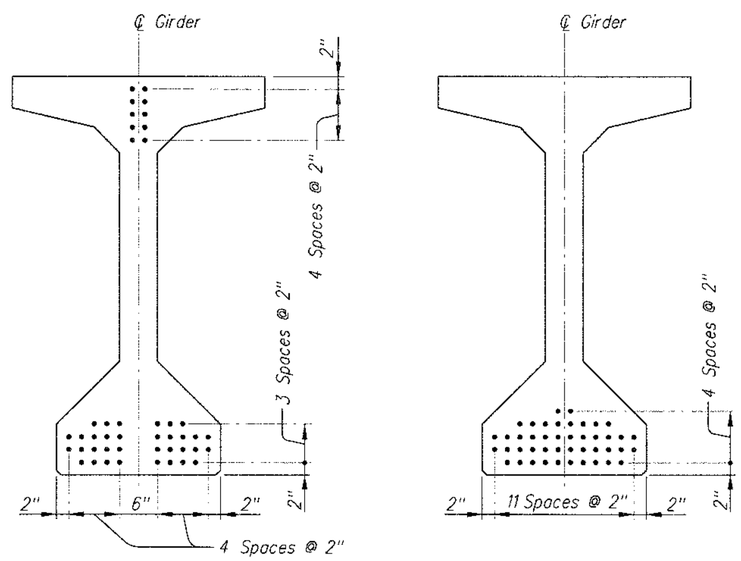

AT ENDS **AT MIDSPAN**

STRAND PATTERN

44 - 0.6" Diam. 7-Wire Low Relaxation Strands
No Scale

PRESTRESSING NOTES

1. See General Notes on Sheet S3.
2. Pi= 1934 Kips initial tension before losses.
   Pw= 1502 Kips working force remaining after all losses.
   f'ci= 6,500 psi minimum concrete compressive strength at transfer.
   f'c= 7,300 psi minimum concrete compressive strength at 28 days.
3. All low relaxation strands shall be stressed to 0.75 f's.
4. All girders shall be prestressed by the pretensioning method only.
5. Use of masked strands will not be allowed.
6. Yc = Distance to Center of Gravity of Prestressing measured from bottom of Girder.
7. Ends of girders shall be constructed to be vertical when erected.
8. Provide Threaded Inserts for mounting La Cholla Blvd. Sign to web of Girders. Sign shall be placed over Rillito River Pedestrian Path at easternmost Girders of NB Bridge Spans 1 & 3 and westernmost Girders of SB Bridge Spans 1 & 3. See Details 3 & 4 on Sheet S39.
9. The Contractor shall provide temporary bracing for the girders immediately after erection to ensure that they remain stable until the intermediate diaphragms are constructed. The temporary bracing must remain in place until the intermediate diaphragms are poured and the concrete has reached the required 28-day strength. The cost of the temporary bracing shall be incidental to the cost of the girders.

Location	Girder Length = 'L'
Southbound Bridge Span 1 & 3	119'-11⅞"
Southbound Bridge Span 2	118'-7¾"

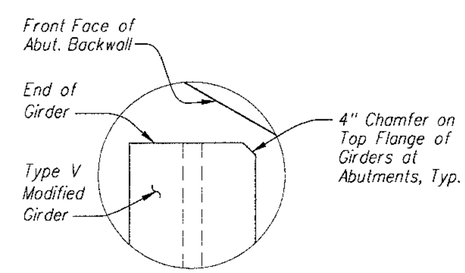

DETAIL – TOP FLANGE CHAMFER AT ABUTMENTS

No Scale

No.	Revision Description	Engineer	Date

		Date
Designed	FRM, SST	8/09
Drawn	TRK	8/09
Checked	TWB	8/09
Proj. Engr.	TWB	8/09

Priscilla S. Cornelio, P.E. Director

Registered Professional Engineer, Certificate No. 29368, Ted W. Buell, Designed 9-24-09, Arizona U.S.A.

Expires 09-30-2010

HDR Engineering, Inc.
5210 East Williams Circle, Suite 530
Tucson, AZ 85711-4459
(520) 584-3600

Pima County Department of Transportation

PRECAST GIRDER DETAILS (SB)
LA CHOLLA BOULEVARD BRIDGE
RUTHRAUFF RD. TO RIVER RD.
PROJECT NO. 4LCITR

Scales	Horiz. 1"= Vert. N/A	Sheet S30 of S58	Page 267 of 356

Date: 08\20\09

File: C:\PWworking\PHX\dms42758\20S-B30.dgn

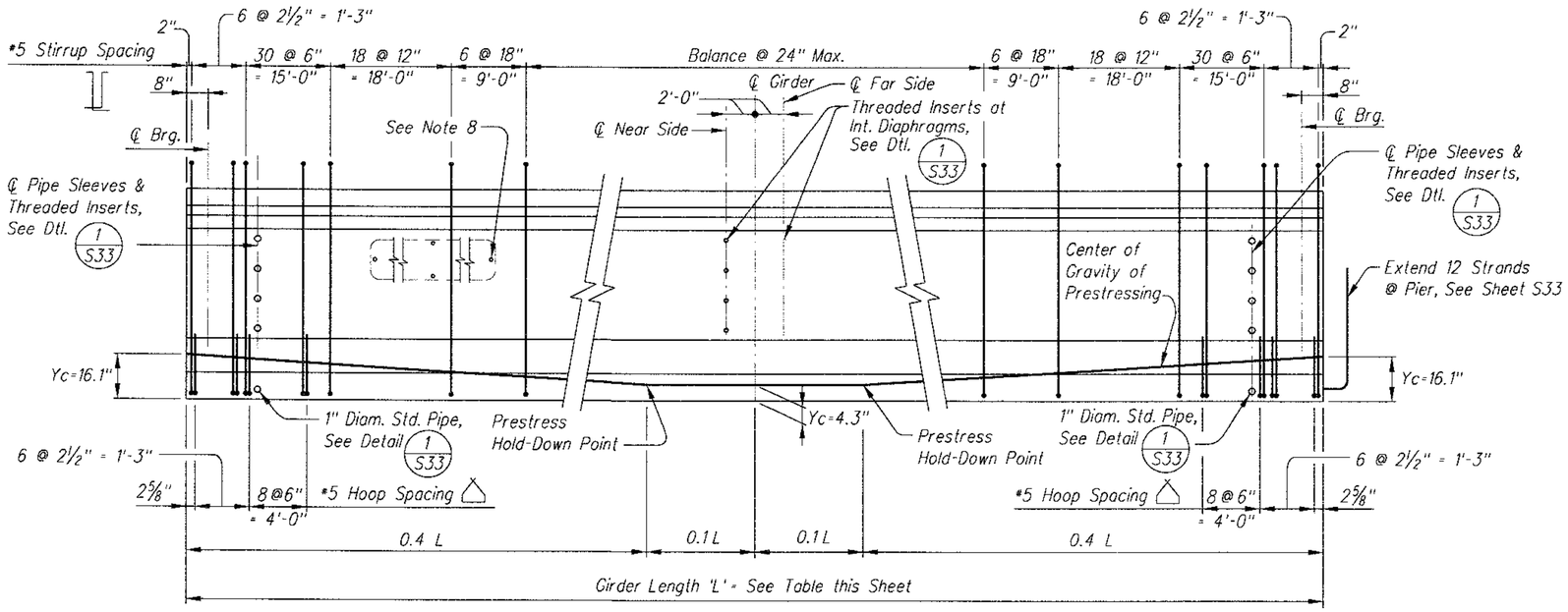

NB SPANS 1 & 2 GIRDER ELEVATION

No Scale

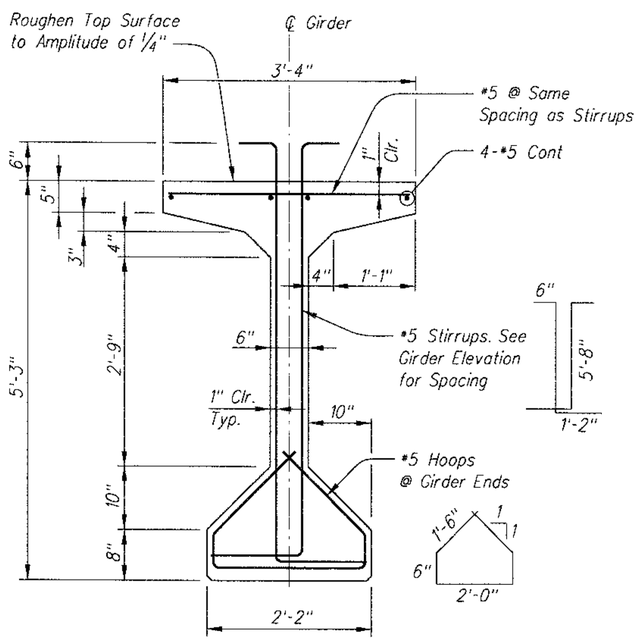

Note:
Strands not shown for clarity.

AASHTO TYPE V MODIFIED GIRDER

No Scale

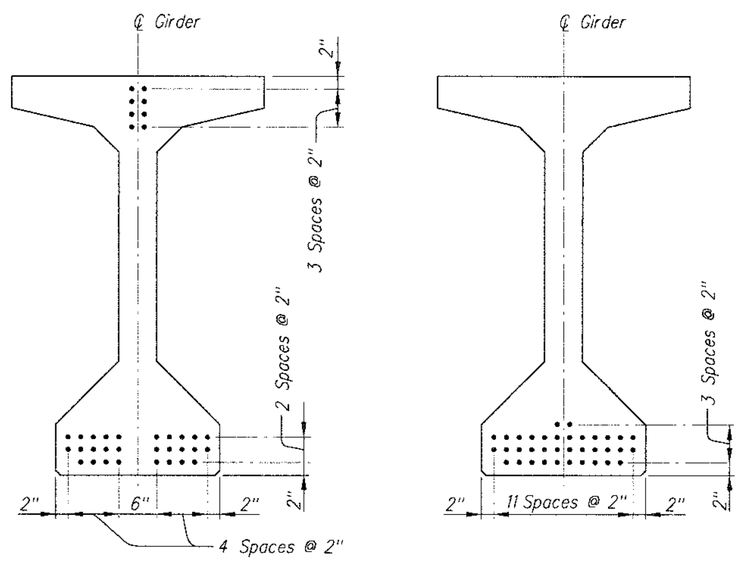

AT ENDS **AT MIDSPAN**

STRAND PATTERN

36 - 0.6" Diam. 7-Wire Low Relaxation Strands
No Scale

PRESTRESSING NOTES

1. See General Notes on Sheet S3.
2. Pi= 1582 Kips initial tension before losses.
   Pw= 1278 Kips working force remaining after all losses.
   f'ci= 5,300 psi minimum concrete compressive strength at transfer.
   f'c= 6,300 psi minimum concrete compressive strength at 28 days.
3. All low relaxation strands shall be stressed to 0.75 f's.
4. All girders shall be prestressed by the pretensioning method only.
5. Use of masked strands will not be allowed.
6. Yc = Distance to Center of Gravity of Prestressing measured from bottom of Girder.
7. Ends of girders shall be constructed to be vertical when erected.
8. Provide Threaded Inserts for mounting La Cholla Blvd. Sign to web of Girders. Sign shall be placed over Rillito River Pedestrian Path at easternmost Girders of NB Bridge Spans 1 & 3 and westernmost Girders of SB Bridge Spans 1 & 3. See Details 3 & 4 on Sheet S39.
9. The Contractor shall provide temporary bracing for the girders immediately after erection to ensure that they remain stable until the intermediate diaphragms are constructed. The temporary bracing must remain in place until the intermediate diaphragms are poured and the concrete has reached the required 28-day strength. The cost of the temporary bracing shall be incidental to the cost of the girders.

Location	Girder Length = 'L'
Northbound Bridge Span 1	118'-8¼"
Northbound Bridge Span 2	117'-4⅜"

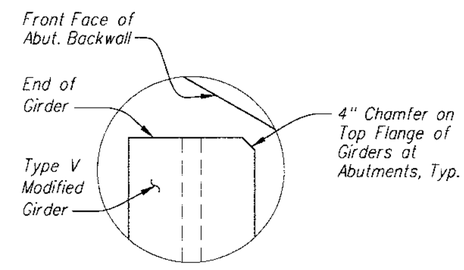

DETAIL – TOP FLANGE CHAMFER AT ABUTMENTS

No Scale

No.	Revision Description	Engineer	Date

		Date
Designed	FRM, SST	8/09
Drawn	TRK	8/09
Checked	TWB	8/09
Proj. Engr.	TWB	8/09

Priscilla S. Cornelio, P.E. Director

Registered Professional Engineer (Civil) CERTIFICATE NO. 29368 TED W. BUELL Date Signed 8-24-09 ARIZONA U.S.A.
Expires 09-30-2010

HDR Engineering, Inc.
5210 East Williams Circle, Suite 530
Tucson, AZ 85711-4459
(520) 584-3600

Pima County Department of Transportation

PRECAST GIRDER DETAILS (NB)
LA CHOLLA BOULEVARD BRIDGE
RUTHRAUFF RD. TO RIVER RD.
PROJECT NO. 4LCITR

Scales	Horiz. 1"= Vert. N/A	Sheet S31 of S58	Page 268 of 356

Date: 08\20\09

File: C:\PWworking\PHX\dms42758\20S-B31.dgn

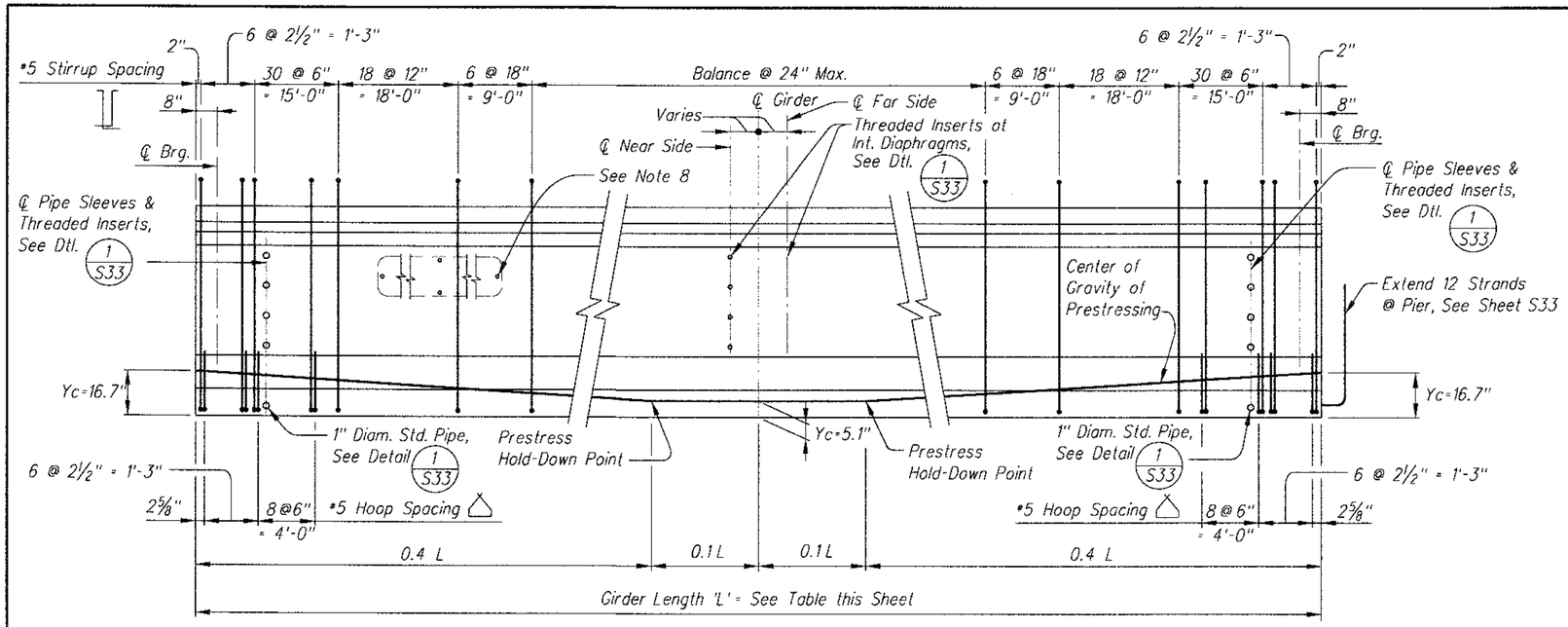

NB SPAN 3 GIRDER ELEVATION

No Scale

PRESTRESSING NOTES

1. See General Notes on Sheet S3.
2. f'ci= 6,500 psi minimum concrete compressive strength at transfer. f'c= 7,300 psi minimum concrete compressive strength at 28 days. See Table this Sheet for initial tension before losses (P_i) and working force remaing after losses (P_w).
3. All low relaxation strands shall be stressed to 0.75 f's.
4. All girders shall be prestressed by the pretensioning method only.
5. Use of masked strands will not be allowed.
6. Yc = Distance to Center of Gravity of Prestressing measured from bottom of Girder.
7. Ends of girders shall be constructed to be vertical when erected.
8. Provide Threaded Inserts for mounting La Cholla Blvd. Sign to web of Girders. Sign shall be placed over Rillito River Pedestrian Path at easternmost Girders of NB Bridge Spans 1 & 3 and westernmost Girders of SB Bridge Spans 1 & 3. See Details 3 & 4 on Sheet S39.
9. The Contractor shall provide temporary bracing for the girders immediately after erection to ensure that they remain stable until the intermediate diaphragms are constructed. The temporary bracing must remain in place until the intermediate diaphragms are poured and the concrete has reached the required 28-day strength. The cost of the temporary bracing shall be incidental to the cost of the girders.

NB Span 3 Girder	Girder Length = 'L'	Pi	Pw
7	122'-0⅝"	1934 kip	1502 kip
8	121'-1"	1934 kip	1497 kip
9	120'-1¾"	1934 kip	1493 kip
10	119'-2⅜"	1934 kip	1490 kip
11	118'-3½"	1934 kip	1487 kip
12	117'-4⅞"	1934 kip	1484 kip
13	116'-6½"	1934 kip	1493 kip

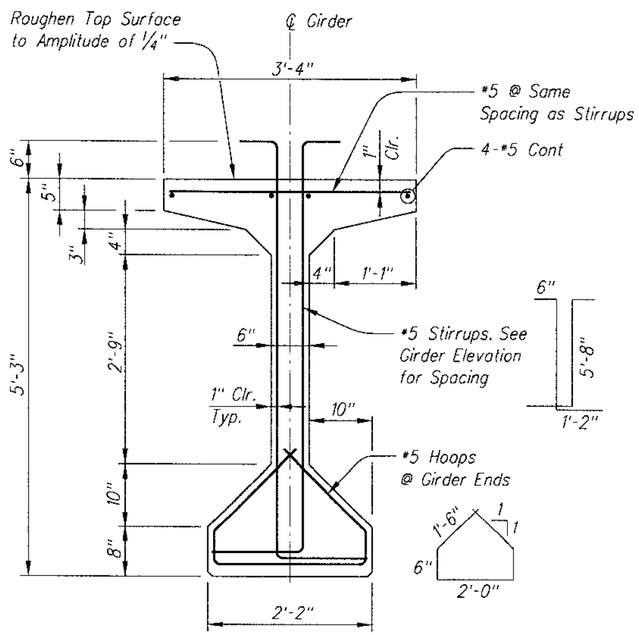

Note:
Strands not shown for clarity.

AASHTO TYPE V MODIFIED GIRDER

No Scale

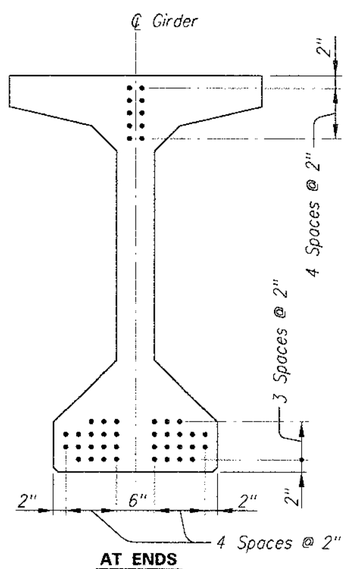

AT ENDS

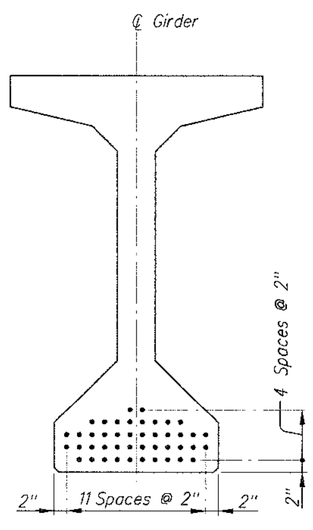

AT MIDSPAN

STRAND PATTERN

44 - 0.60" Diam. 7-Wire Low Relaxation Strands
No Scale

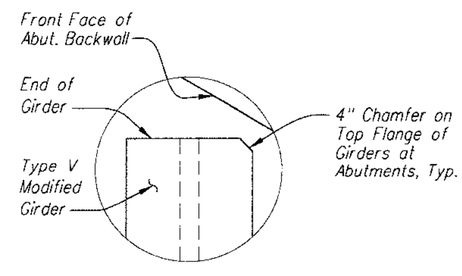

DETAIL - TOP FLANGE CHAMFER AT ABUTMENTS

No Scale

No.	Revision Description	Engineer	Date

Designed	EPM, SST	8/09
Drawn	TRK	8/09
Checked	TWB	8/09
Proj. Engr.	TWB	8/09

Priscilla S. Cornelio, P.E. Director

Registered Professional Engineer, Certificate No. 29368, TED W. BUELL, Date Signed, ARIZONA U.S.A.

Expires 09-30-2010

HDR Engineering, Inc.
5210 East Williams Circle, Suite 530
Tucson, AZ 85711-4459
(520) 584-3600

Pima County Department of Transportation

PRECAST GIRDER DETAILS (NB)
LA CHOLLA BOULEVARD BRIDGE
RUTHRAUFF RD. TO RIVER RD.
PROJECT NO. 4LCITR

Scales	Horiz. 1"=	Sheet	S32 of S58	Page	269 of 356
	Vert. N/A				

Date: 08\20\09

File: C:\PWworking\PHX\dms42758\20S-B32.dgn

Notes:

1. Threaded Inserts are Ferrule Loop Inserts for #6 Reinforcing Bars threaded on end. Inserts shall develop an allowable pullout strength of 6.6 kips.
2. Threaded Inserts shall be placed normal to Face of Girder. Field bend inserted bars in such a manner as to prevent bending stresses at Root of Threads. Shop Drawings shall indicate method of bending.
3. Threaded inserts shall be used in girder webs at all intermediate diaphragms and in the interior face of the exterior girders at pier diaphragms. Use 1" diameter standard pipe sleeves in all interior girder webs at pier and abutment diaphragms.
4. See Detail 3 this sheet for additional information.

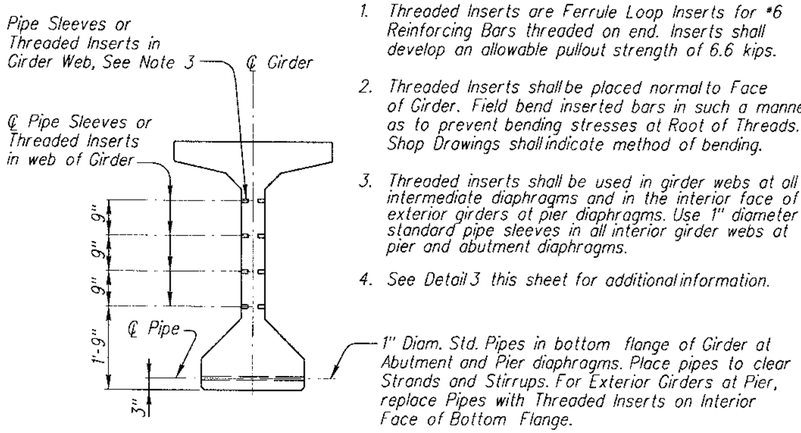

TYPICAL GIRDER INSERT DETAIL (1)

No Scale

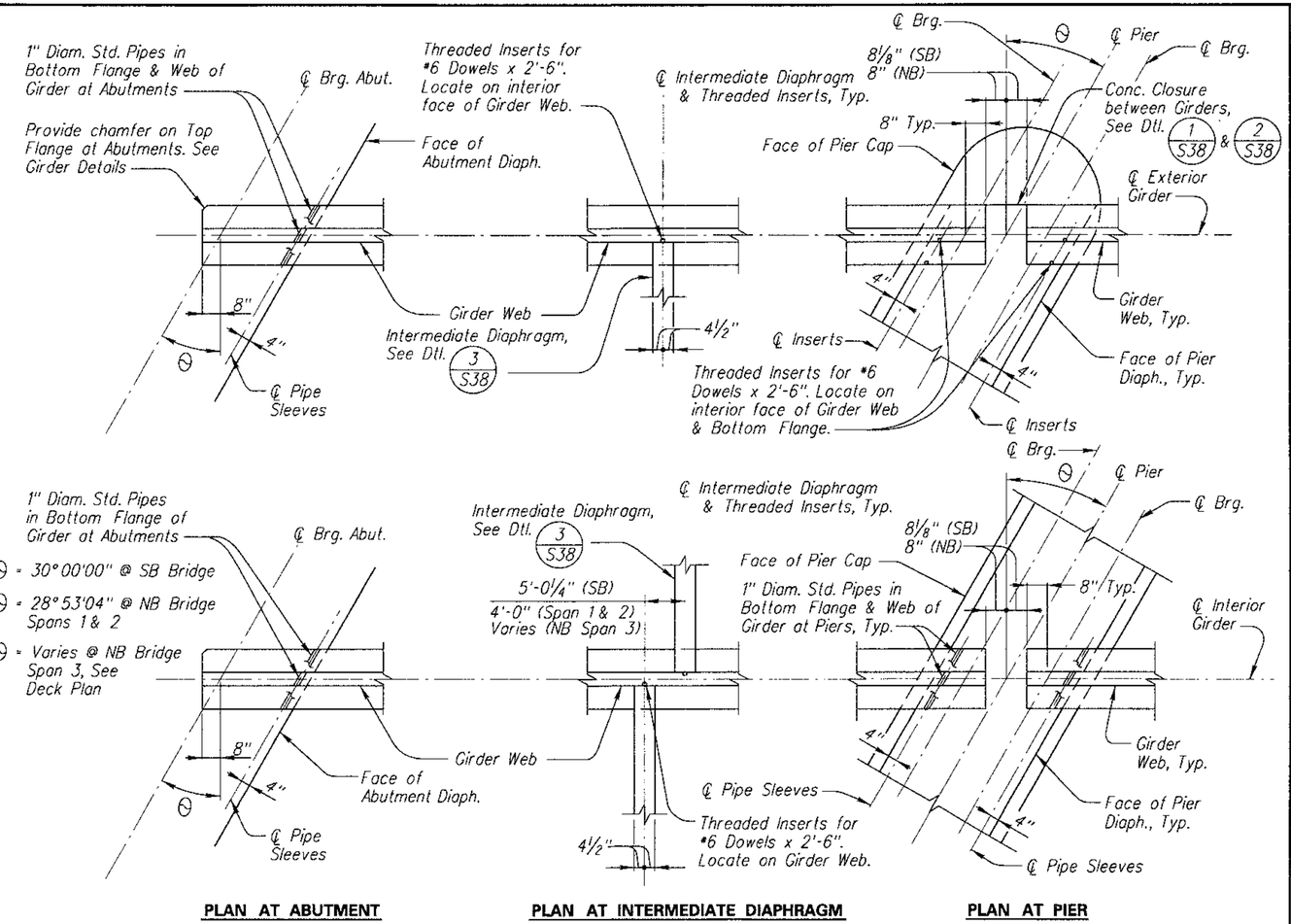

PLAN AT ABUTMENT — PLAN AT INTERMEDIATE DIAPHRAGM — PLAN AT PIER

TYPICAL GIRDER INSERT DETAILS (3)

No Scale

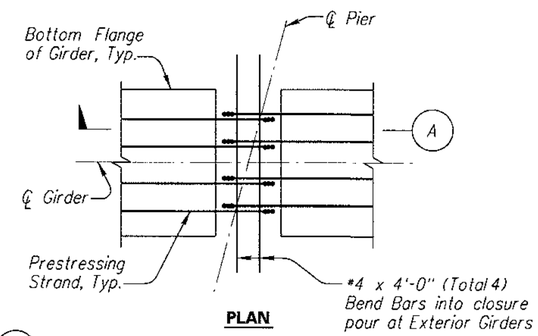

PLAN

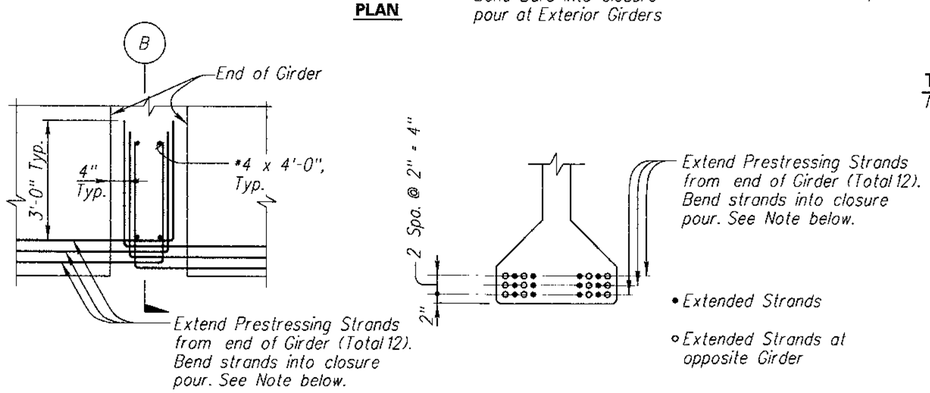

SECTION (A) — SECTION (B)

Note:

All strands not required to be extended shall be cut flush and the exposed steel at cut ends protected with asphalt coating.

TYPICAL END OF GIRDER DETAIL AT FIXED PIERS (2)

No Scale

No.	Revision Description	Engineer	Date	Designed	FRM, SST	8/09
				Drawn	SST	8/09
				Checked	TWB	8/09
				Proj. Engr.	TWB	8/09

Priscilla S. Cornelio, P.E. Director

Registered Professional Engineer (Civil) CERTIFICATE NO. 29368 TED W. BUELL Date Signed 8-24-09 ARIZONA U.S.A. Expires 09-30-2010

HDR Engineering, Inc. 5210 East Williams Circle, Suite 530 Tucson, AZ 85711-4459 (520) 594-3600

PRECAST GIRDER DETAILS
LA CHOLLA BOULEVARD BRIDGE
RUTHRAUFF RD. TO RIVER RD.
PROJECT NO. 4LCITR

Pima County Department of Transportation

Scales	Horiz. 1"= Vert. N/A	Sheet S33 of S58	Page 270 of 356

Date: 08\20\09

File: C:\PWworking\PHX\dms42758\20S-B33.dgn

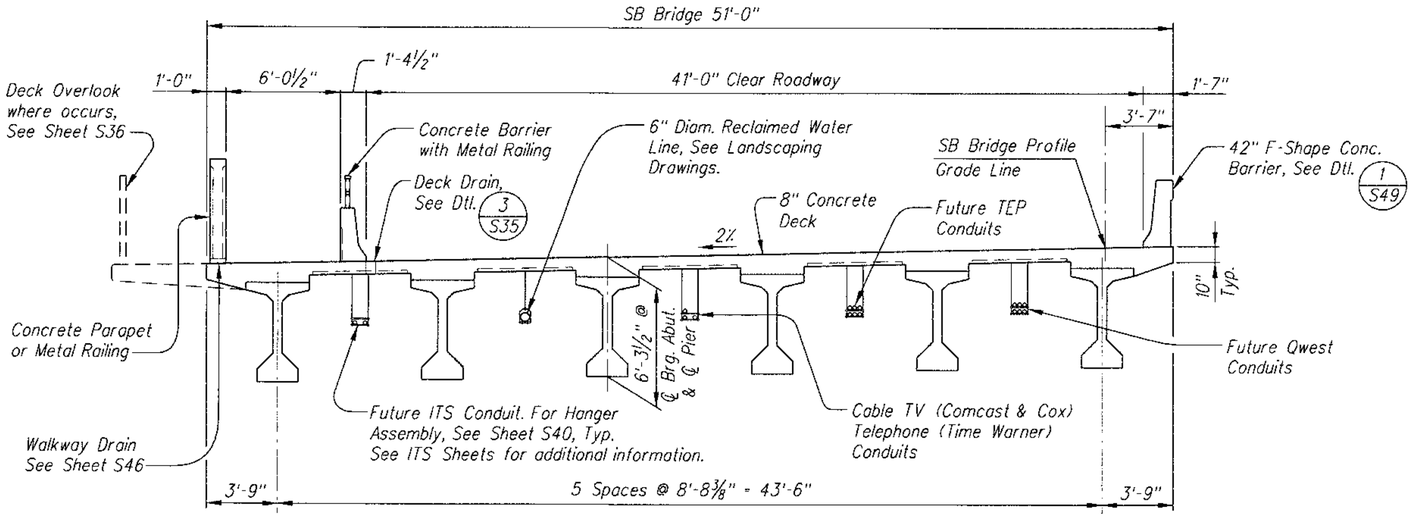

TYPICAL DECK SECTION – NEW SB BRIDGE (1)

Scale ¼"=1'-0"

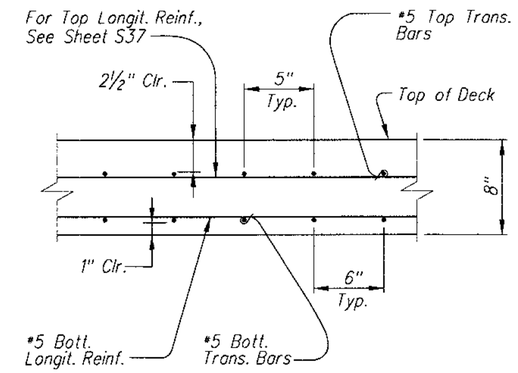

LONGITUDINAL DECK SECTION (3)

No Scale

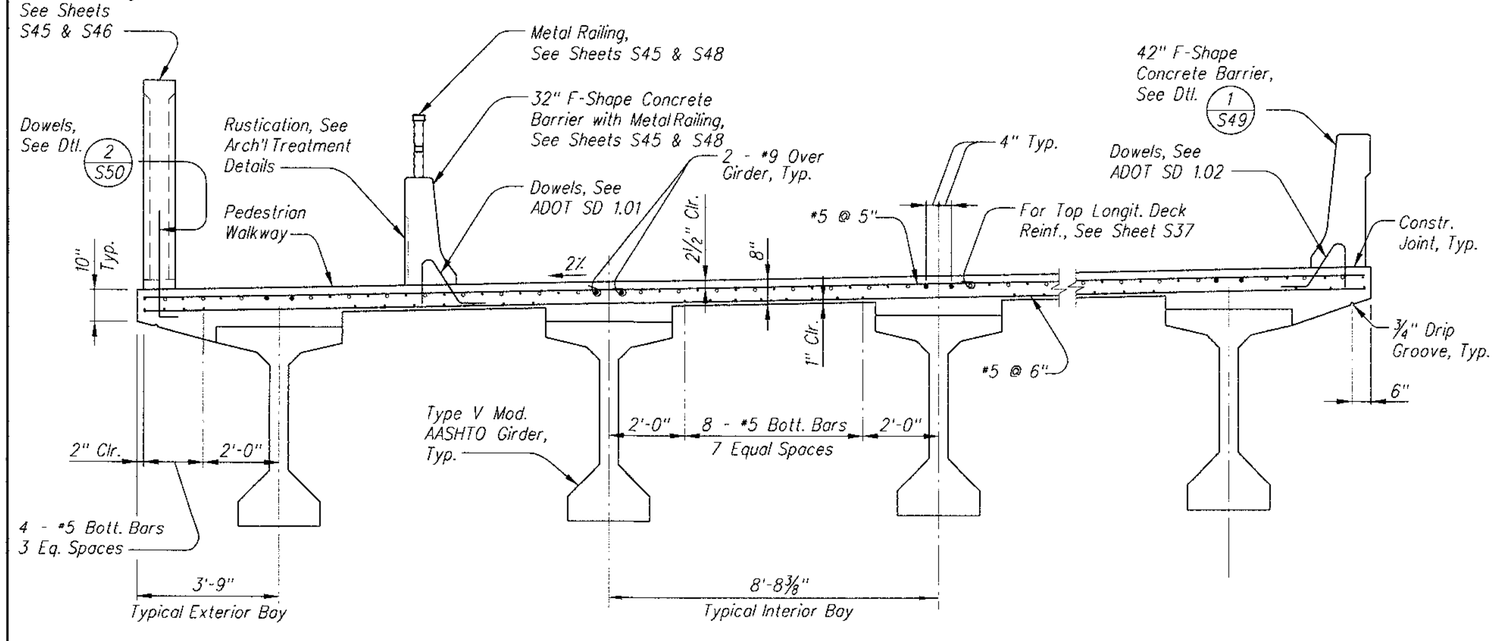

PARTIAL SECTION – TYPICAL SB DECK REINFORCING (2)

Scale ½"=1'-0"

REINFORCING NOTES

1. Longitudinal Deck Reinforcing shall be placed parallel to SB Bridge Profile Grade Line.
2. Transverse Deck Reinforcing shall be placed perpendicular to SB Profile Grade Line.
3. All Continuous Horizontal Reinforcing in Deck, Diaphragms and Barriers, excluding Transverse Reinforcing in Deck Slab, may be spliced where required with minimum lap length as specified:

   #4 Bars - 1'-6"
   #5 Bars - 2'-0"

   Top transverse bars in deck slab shall be spliced where required at midspan between girders. Bottom transverse bars in deck slab shall be spliced where required at centerline of girder. Splice lengths for #5 transverse bars shall be 2'-0" minimum.
4. No splice is allowed for bottom longitudinal deck reinforcing within 20'-0" either side of ℄ Pier. Top reinf. shall be placed as shown on the deck longitudinal reinf. plan.
5. Bars shall not be spliced within the required lap length of the adjacent bars.
6. Contractor to submit shop drawings showing lap splice locations to the Engineer for approval prior to fabrication.
7. Size and spacing of barrier reinforcing bars cast into deck slab vary at open joints at abutments and piers. See SD 1.01 and SD 1.02 for details. These reinforcing bars are included in the linear foot cost of the barriers.
8. See Sheet S37 for additional deck reinforcing information.

No.	Revision Description	Engineer	Date

		Date
Designed	FRM, SST	8/09
Drawn	TRK	8/09
Checked	TWG	8/09
Proj. Eng.	TWG	8/09

Registered Professional Engineer — Certificate No. 29368 — Ted W. Buell — Date Signed 8-31-09 — Arizona U.S.A.
Expires 09-30-2010

HDR Engineering, Inc.
5210 East Williams Circle, Suite 530
Tucson, AZ 85711-4459
(520) 584-3600

Pima County Department of Transportation
Priscilla S. Cornelio, P.E. Director

SB DECK SECTION
LA CHOLLA BOULEVARD BRIDGE
RUTHRAUFF RD. TO RIVER RD.
PROJECT NO. 4LCITR

Date: 08\20\09

File: C:\PWworking\PHX\dms42758\20S-B34.dgn

Scales	Horiz. 1"= Vert. N/A	Sheet S34 of S58	Page 271 of 356

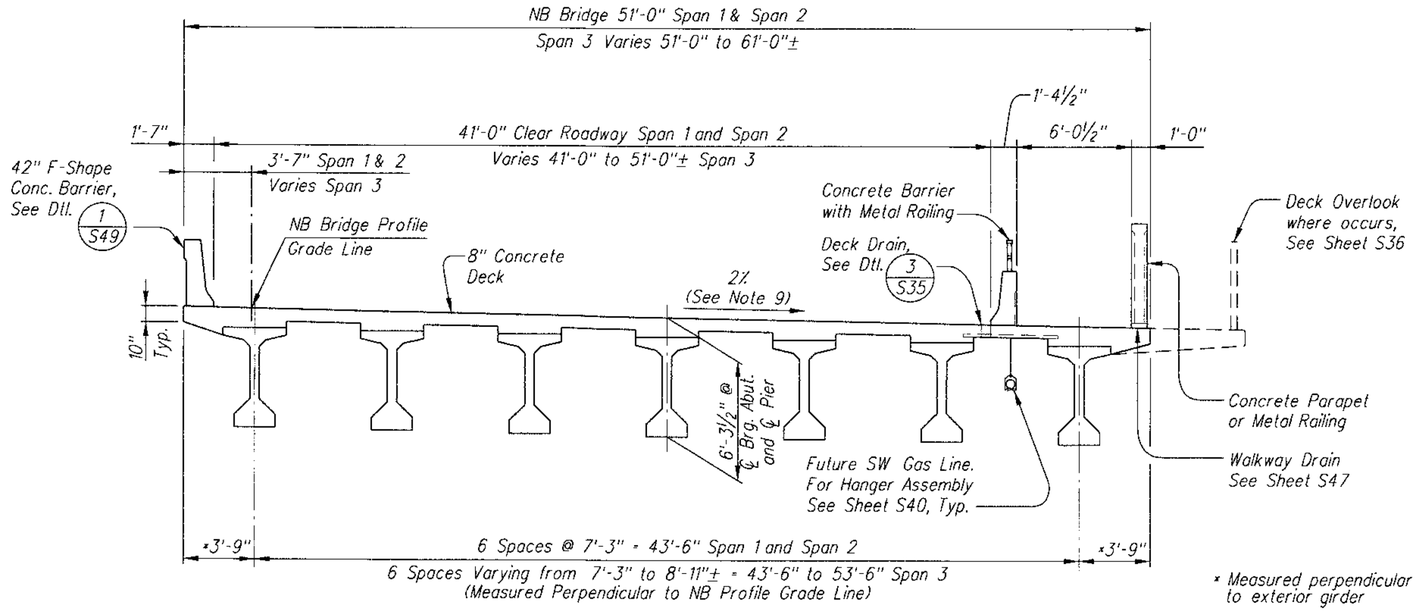

TYPICAL DECK SECTION - NEW NB BRIDGE (1)

Scale ¼"=1'-0"

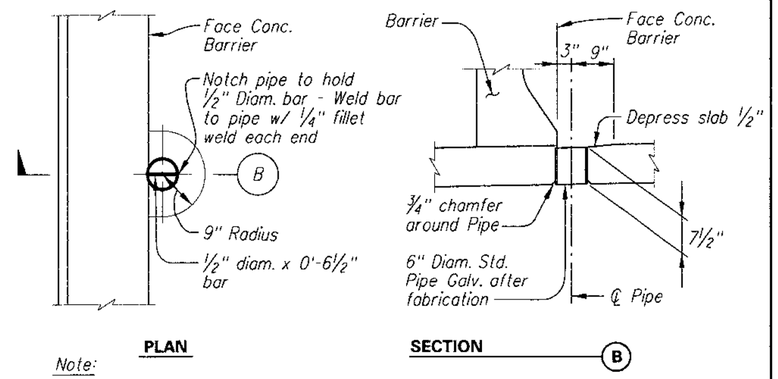

PLAN **SECTION** (B)

Note:

1. Provide drains on low side of deck at ¼ points of spans. See Deck Plan.
2. Deck drains shall conform to ASTM A53, Type S, Grade B. Galvanize after fabrication in accordance with ASTM A123.

DECK DRAIN DETAIL (3)

No Scale

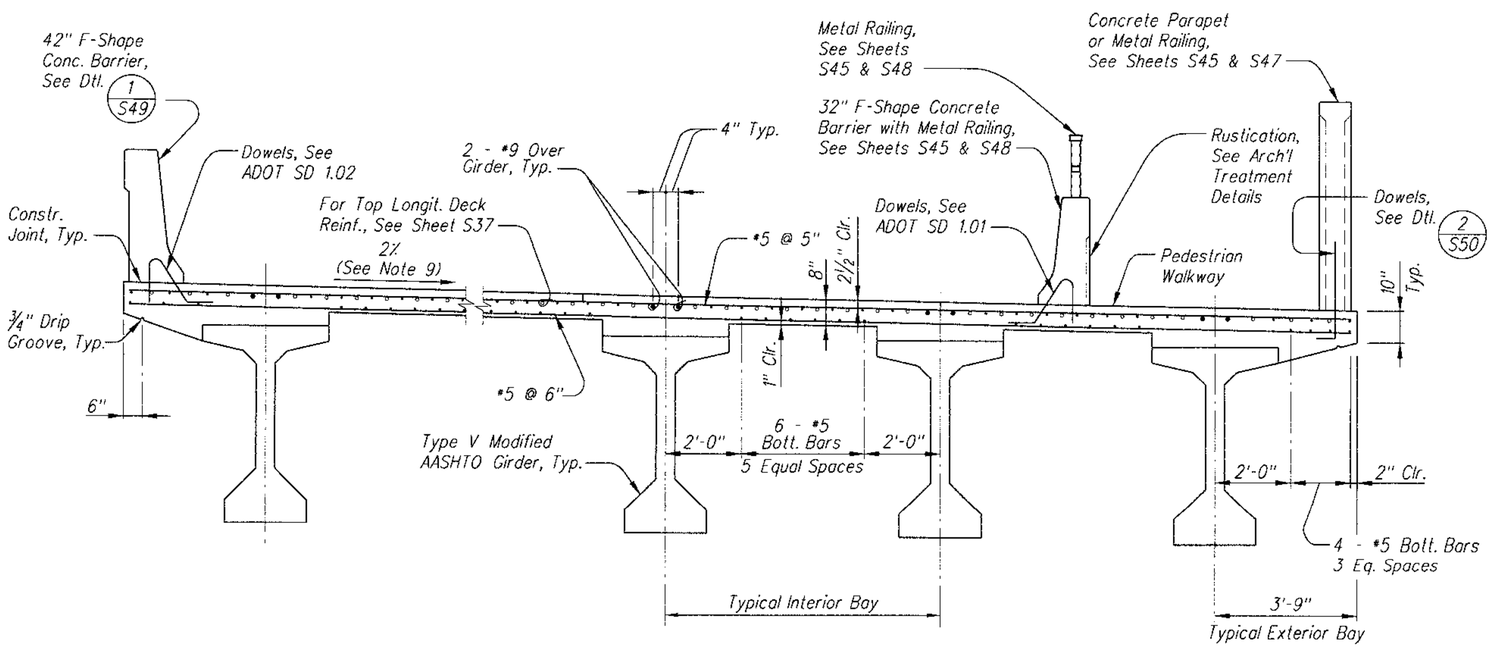

PARTIAL SECTION - TYPICAL NB DECK REINFORCING (2)

Scale ½"=1'-0"

REINFORCING NOTES

1. Longitudinal Deck Reinforcing shall be placed parallel to NB Bridge Profile Grade Line except in span 3 where it shall be flared to match the flare of the girders.
2. Transverse Deck Reinforcing shall be placed perpendicular to NB Profile Grade Line.
3. All Continuous Horizontal Reinforcing in Deck, Diaphragms and Barriers, excluding Transverse Reinforcing in Deck Slab, may be spliced where required with minimum lap length as specified:

   #4 Bars - 1'-6"
   #5 Bars - 2'-0"

   Top transverse bars in deck slab shall be spliced where required at midspan between girders. Bottom transverse bars in deck slab shall be spliced where required at centerline of girder. Splice lengths for #5 transverse bars shall be 2'-0" minimum.
4. No splice is allowed for bottom longitudinal deck reinforcing within 20'-0" either side of ℄ Pier. Top reinf. shall be placed as shown on the deck longitudinal reinf. plan.
5. Bars shall not be spliced within the required lap length of the adjacent bars.
6. Contractor to submit shop drawings showing lap splice locations to the Engineer for approval prior to fabrication.
7. Size and spacing of barrier reinforcing bars cast into deck slab vary at open joints at abutments and piers. See SD 1.01 and SD 1.02 for details. These reinforcing bars are included in the linear foot cost of the barriers.
8. See Sheet S37 for additional deck reinforcing information.
9. The northbound bridge deck cross-slope is perpendicular to the northbound bridge profile grade line.

No.	Revision Description	Engineer	Date

		Date
Designed	EPM, SST	8/09
Drawn	TRK	8/09
Checked	TWB	8/09
Proj. Engr.	TWB	8/09

Priscilla S. Cornelio, P.E. Director

Registered Professional Engineer, Certificate No. 29368, Ted W. Buelna, Arizona U.S.A.

Expires 09-30-2010

HDR Engineering, Inc.
5210 East Williams Circle, Suite 530
Tucson, AZ 85711-4459
(520) 594-3600

Pima County Department of Transportation

NB DECK SECTION
LA CHOLLA BOULEVARD BRIDGE
RUTHRAUFF RD. TO RIVER RD.
PROJECT NO. 4LCTR

Date: 08\20\09

File: C:\PWworking\PHX\dms42758\20S-B35.dgn

Scales	Horiz. 1"= Vert. N/A	Sheet S35 of S58	Page 272 of 356

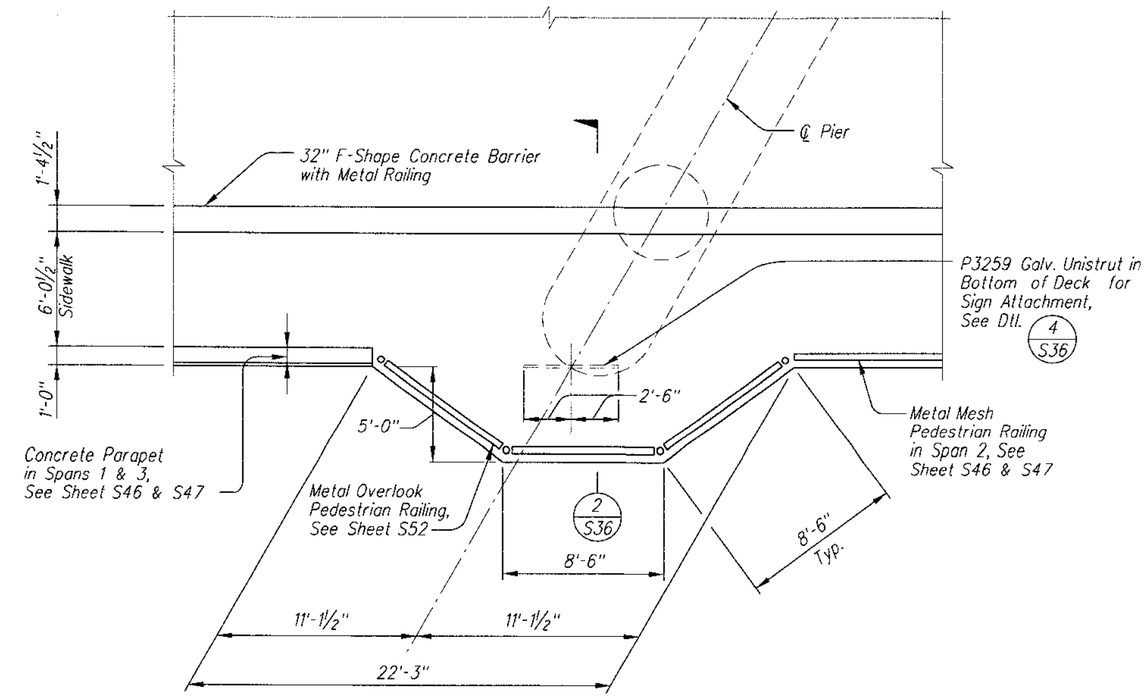

PLAN AT TYPICAL OVERLOOK (1)

Scale ¼"=1'-0"

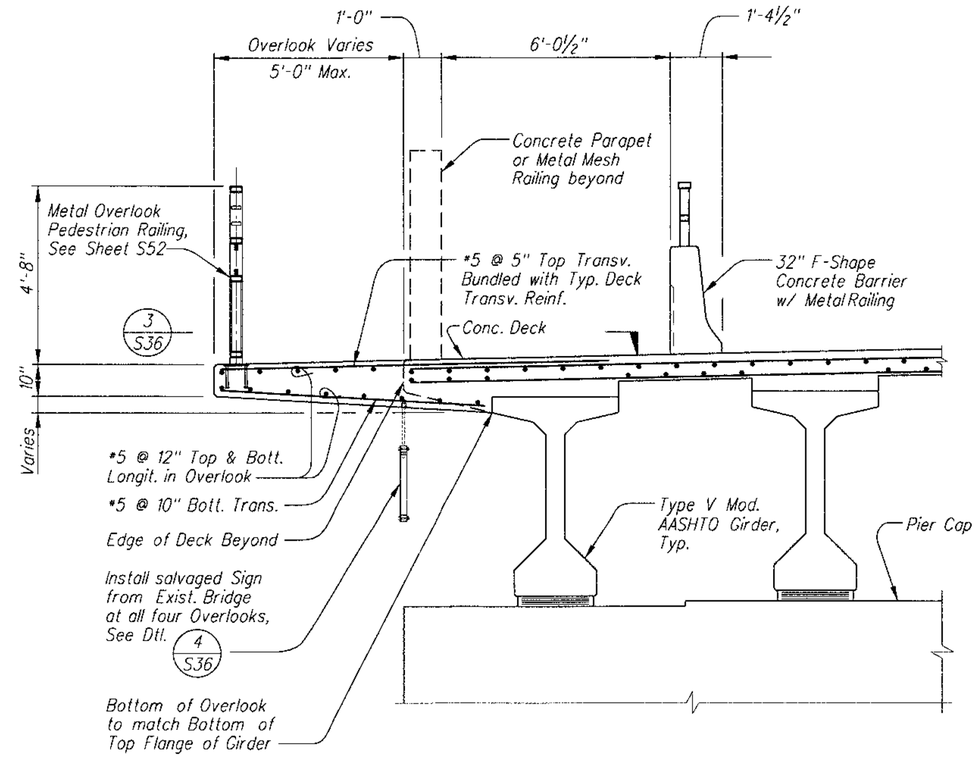

SECTION – TYPICAL OVERLOOK (2)

Scale ½"=1'-0"

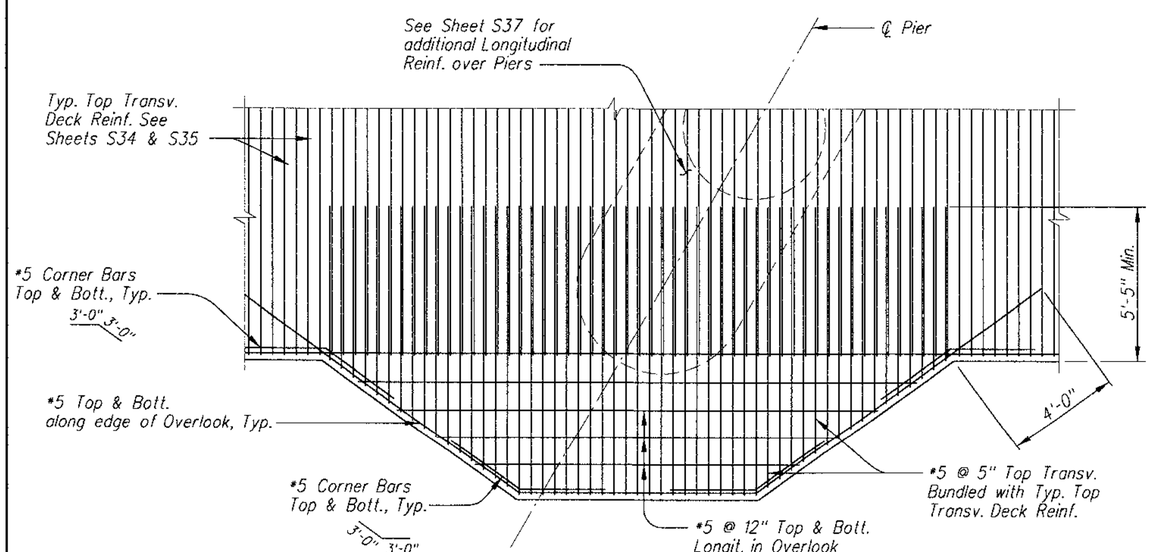

PLAN – TYPICAL TOP TRANSVERSE REINFORCING IN OVERLOOK (3)

Scale ⅜"=1'-0"

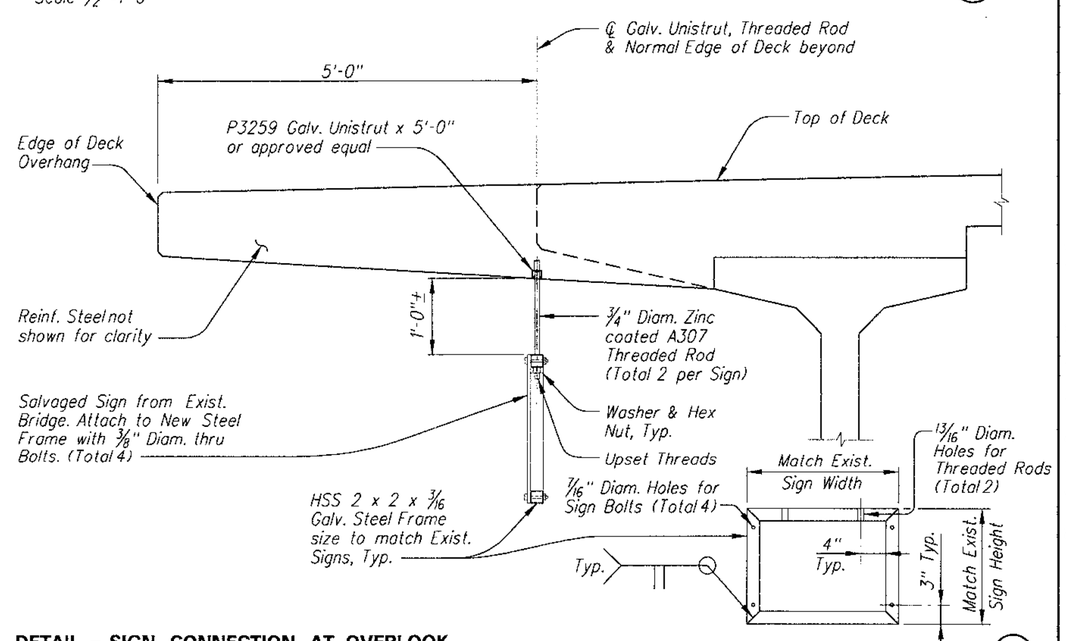

DETAIL – SIGN CONNECTION AT OVERLOOK (4)

Scale 1"=1'-0"

Date: 08\20\09

File: C:\PWworking\PHX\dms42758\20S-B36.dgn

Scales	Horiz. 1"= / Vert. N/A	Sheet S36 of S58	Page 273 of 356

Pima County Department of Transportation

Priscilla S. Cornelio, P.E. Director

No.	Revision Description	Engineer	Date

		Date
Designed	ERM, SST	8/09
Drawn	SST, TRK	8/09
Checked	TWB	8/09
Proj. Engr.	TWB	8/09

Registered Professional Engineer (Civil) CERTIFICATE NO. 29368 TED W. BUSH Date Signed 8-25-09 ARIZONA U.S.A. Expires 09-30-2010

HDR Engineering, Inc. 5210 East Williams Circle, Suite 530 Tucson, AZ 85711-4459 (520) 584-3600

DECK OVERLOOK DETAILS
LA CHOLLA BOULEVARD BRIDGE
RUTHRAUFF RD. TO RIVER RD.
PROJECT NO. 4LCITR

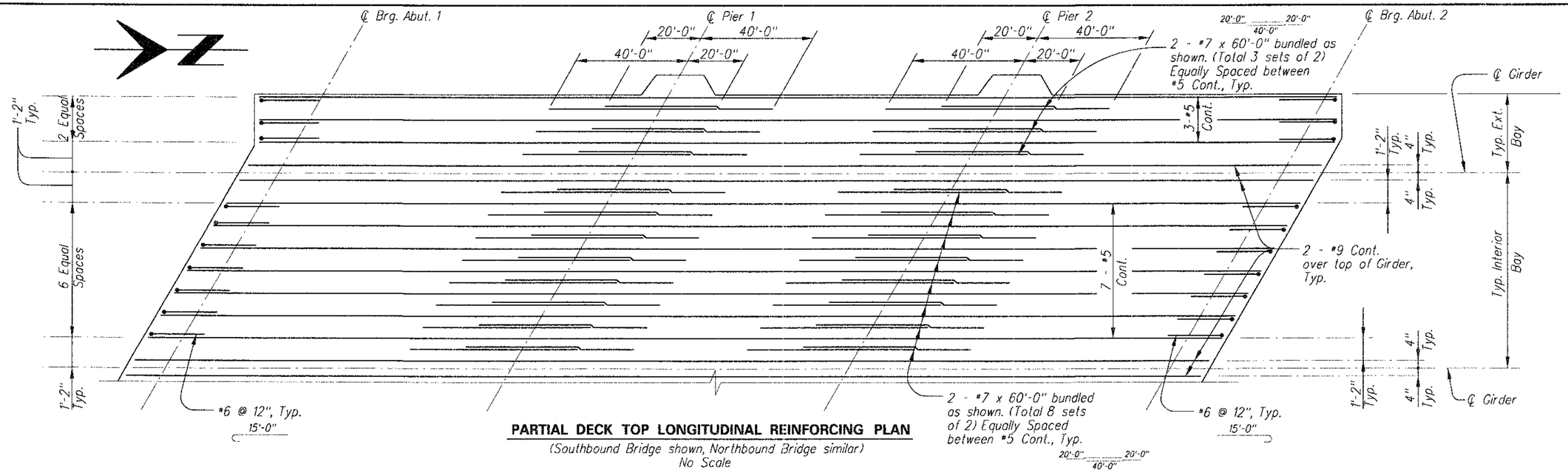

PARTIAL DECK TOP LONGITUDINAL REINFORCING PLAN

(Southbound Bridge shown, Northbound Bridge similar)
No Scale

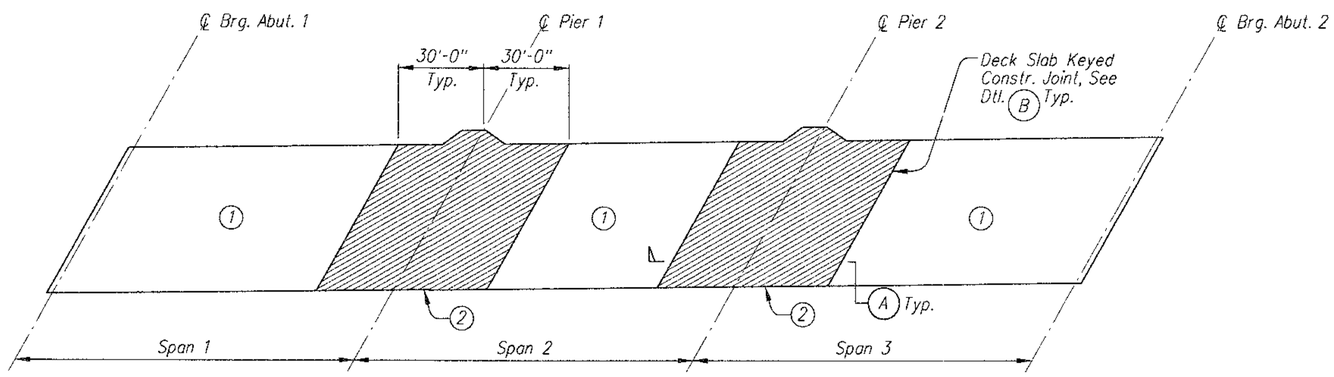

KEY PLAN

Notes:

1. See General Notes on Sheet S3.
2. See Reinforcing Notes on Sheet S34 & S35.
3. Cont. Top Longitudinal Bars shall not be spliced within 25 Feet of either side of ℄ Pier. Stagger all lap splices.
4. Top Longitudinal Deck Reinforcing shall be placed parallel to Constr. ℄ and spaced as shown.

POURING SEQUENCE NOTES:

1. Numbers (1) & (2) indicate placing sequence of deck concrete. Pour (2) sections a minimum of 12 hours after adjacent (1) sections have been poured.
2. Intermediate diaphragms and abutment diaphragms shall be poured prior to the deck pour.
3. Pier diaphragms shall be poured concurrent with the deck pour.
4. Sections (1) and (2) may be poured consecutively but only in the direction from (1) to (2) and a minimum of 12 hours after the adjacent (1) section has been poured.
5. The Contractor shall submit a deck pour schedule to the Engineer for approval prior to placing concrete.
6. Alternate pouring sequences, including continuous pours, require the Engineer's approval and shall be at no additional cost to the County. Conditions and other criteria are contained in the project Special Provisions.

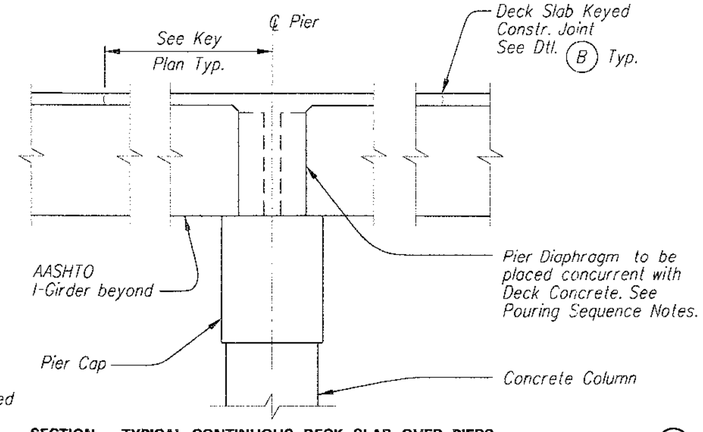

SECTION – TYPICAL CONTINUOUS DECK SLAB OVER PIERS (A)

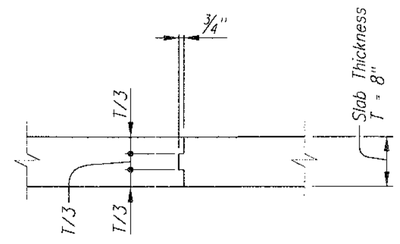

SECTION – DECK SLAB KEYED CONSTRUCTION JOINT (B)

DECK PLACING SEQUENCE DETAILS (1)

No Scale

No.	Revision Description	Date	Engineer	Date

		Date
Designed	EAM, SST	8/09
Drawn	TRK, SST	8/09
Checked	TWG	8/09
Proj. Engr.	TWG	8/09

Priscilla S. Cornelio, P.E. Director

Pima County Department of Transportation

Registered Professional Engineer (Civil) Certificate No. 29368 Ted W. Buell Date Signed 9-30-09 Arizona U.S.A. Expires 09-30-2010

HDR Engineering, Inc.
5210 East Williams Circle, Suite 530
Tucson, AZ 85711-4459
(520) 584-3600

DECK DETAILS
LA CHOLLA BOULEVARD BRIDGE
RUTHRAUFF RD. TO RIVER RD.
PROJECT NO. 4LCITR

Scales	Horiz. 1"= / Vert. N/A	Sheet S37 of S58	Page 274 of 356

Date: 08\20\09

File: C:\PWworking\PHX\dms42758\20S-B37.dgn

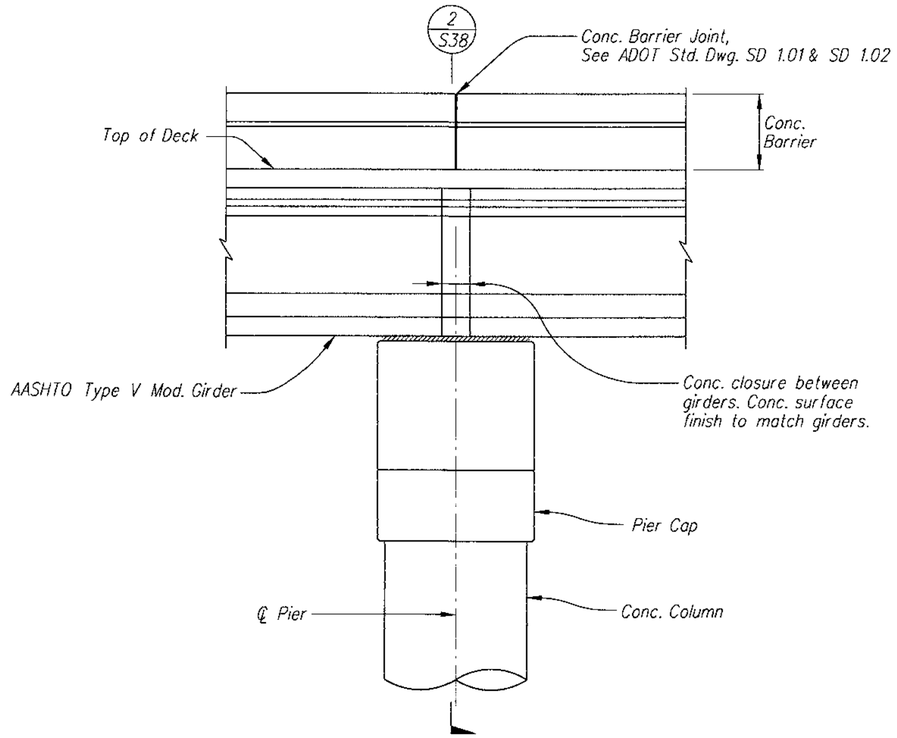

ELEV. - CLOSURE BETWEEN GIRDERS (1)

Scale 3/8"=1'-0"

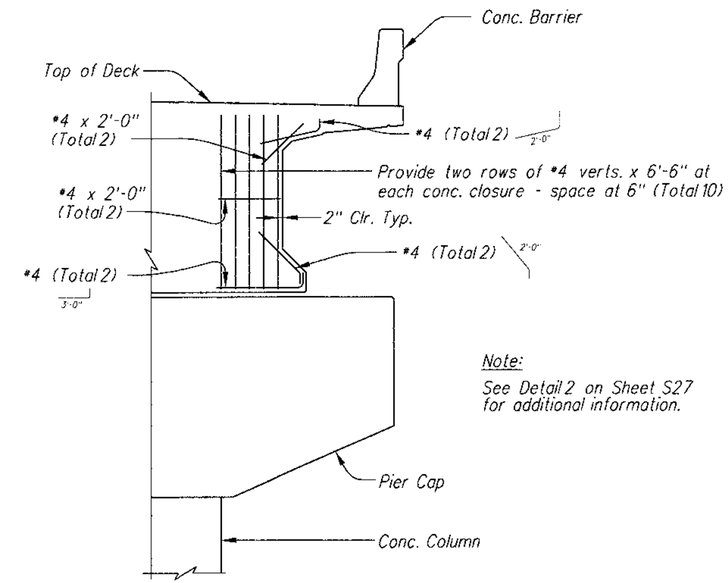

Note:
See Detail 2 on Sheet S27
for additional information.

SECTION AT CONCRETE CLOSURE (2)

Scale 3/8"=1'-0"

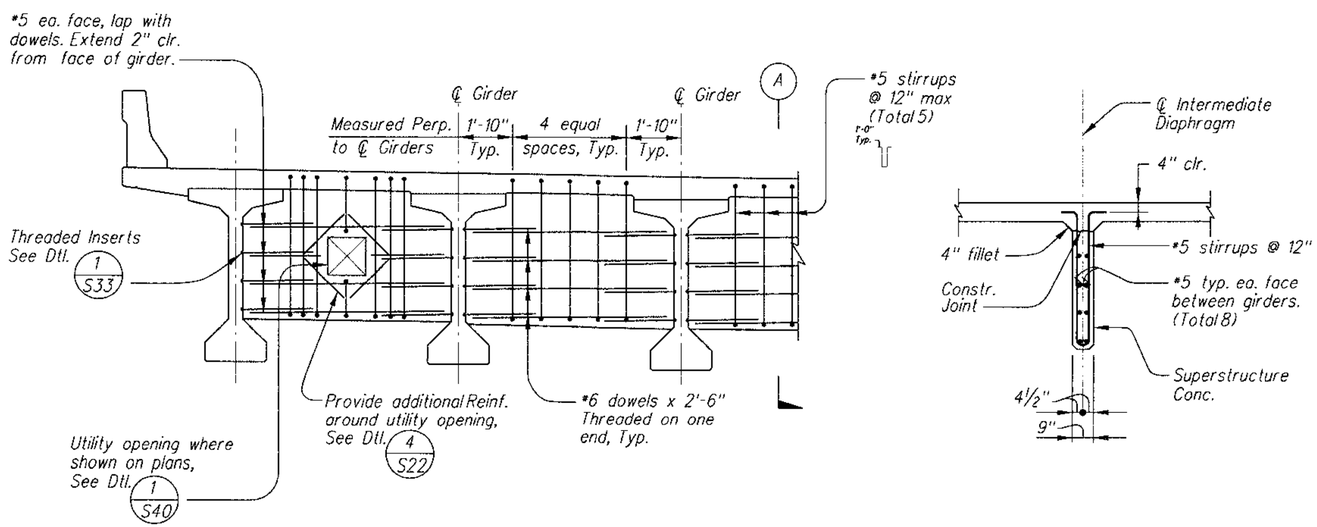

ELEVATION

SECTION (A)

TYPICAL INTERMEDIATE DIAPHRAGM DETAIL (3)

Scale 3/8"=1'-0"

Priscilla S. Cornelio, P.E. Director

No.	Revision Description	Engineer	Date

		Date
Designed	ERM, SST	8/09
Drawn	SST, TRK	8/09
Checked	TWB	8/09
Proj. Engr.	TWB	8/09

Registered Professional Engineer
CERTIFICATE NO. 29368
TED W. BUELL
Date Signed 9-21-09
ARIZONA U.S.A.
Expires 09-30-2010

HDR Engineering, Inc.
3210 East Williams Circle, Suite 530
Tucson, AZ 85711-4459
(520) 394-3600

Pima County Department of Transportation

DECK DETAILS
LA CHOLLA BOULEVARD BRIDGE
RUTHRAUFF RD. TO RIVER RD.
PROJECT NO. 4LCITR

Scales	Horiz. 1"=	Sheet S38 of S58	Page 275 of 356
	Vert. N/A		

Date: 08\20\09

File: C:\PWworking\PHX\dms42758\205-B38.dgn

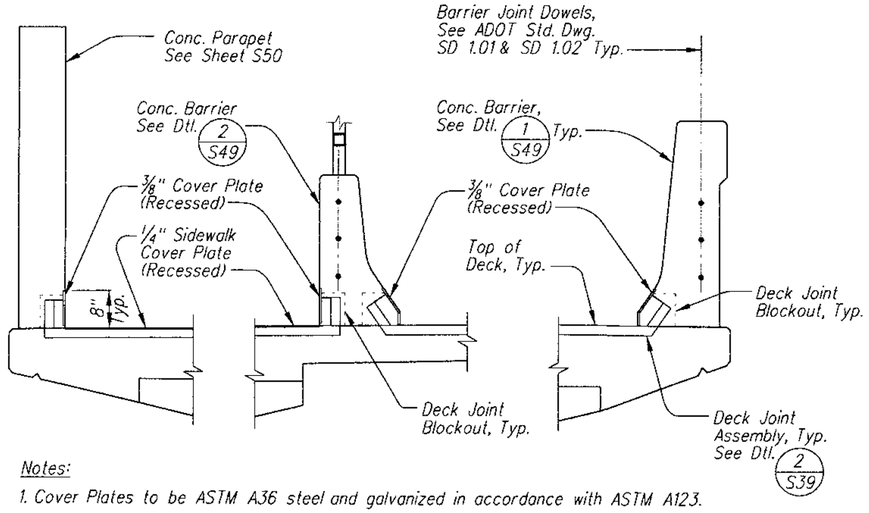

Notes:

1. Cover Plates to be ASTM A36 steel and galvanized in accordance with ASTM A123.
2. Contractor to coordinate dimensions with Deck Joint requirements.
3. Contractor to submit Cover Plate shop drawings for review by Engineer prior to fabrication.
4. See ADOT Std. Dwg. SD 3.02 for Cover Plate details not shown or noted.

SECTION AT DECK JOINT (1)

No Scale

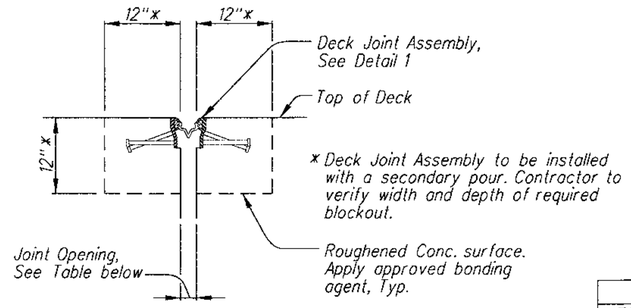

SECTION

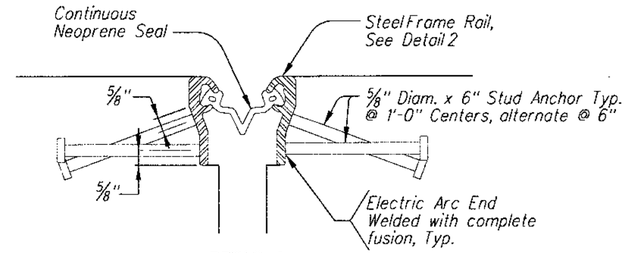

DETAIL 1

Deck Joint Opening Table								
T(F°) @ Installation	100	90	80	70	60	50	40	30
Abut. Jt. (in)	1 5/8"	1 3/4"	1 7/8"	2"	2 1/8"	2 1/4"	2 3/8"	2 1/2"

Deck Joint Notes:

1. Contractor shall provide strip seal deck joint with retainer rails as shown in this detail and as specified in the Special Provisions. References to ADOT Standard Drawing SD 3.02 are only for similar details not shown in these plans such as recessed sidewalk and barrier cover plates and weld detail at retainer rail splices.
2. Contractor shall provide elastomeric strip seal deck joint assemblies with a 4" movement capacity at abutments.
3. The strip seal shall be supplied continuous full length without splices.
4. Joints shall be watertight on the deck.
5. Joint seals shall be removable and replaceable with minimum interruption to traffic.
6. Retainer rails shall be supplied in the maximum length practical consistent with normal manufactured length of the rail. Rail splices and miter cut joints at angle points in edge of deck and abutment backwalls shall be welded per Detail E of ADOT Standard Drawing SD 3.02.
7. See Special Provisions for additional requirements.

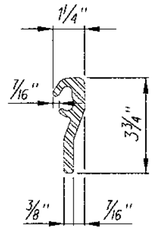

DETAIL 2

DECK JOINT DETAIL (2)

No Scale

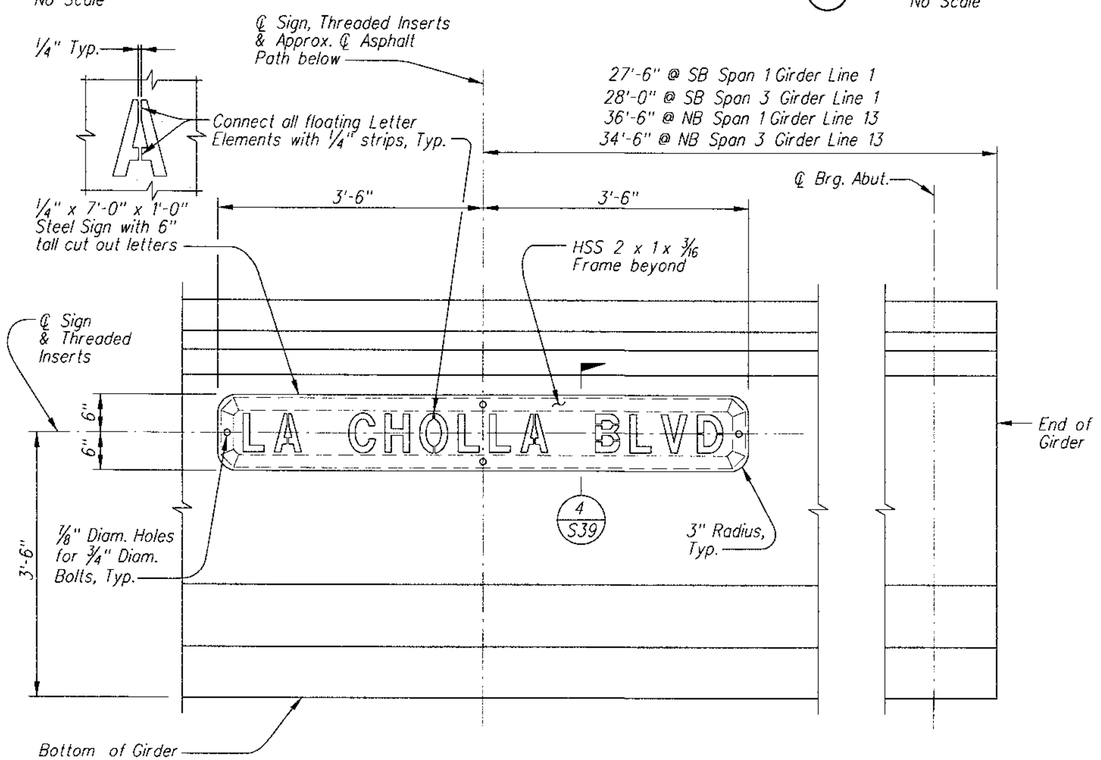

ELEVATION – STEEL SIGN ON GIRDER (3)

Scale 1"=1'-0"

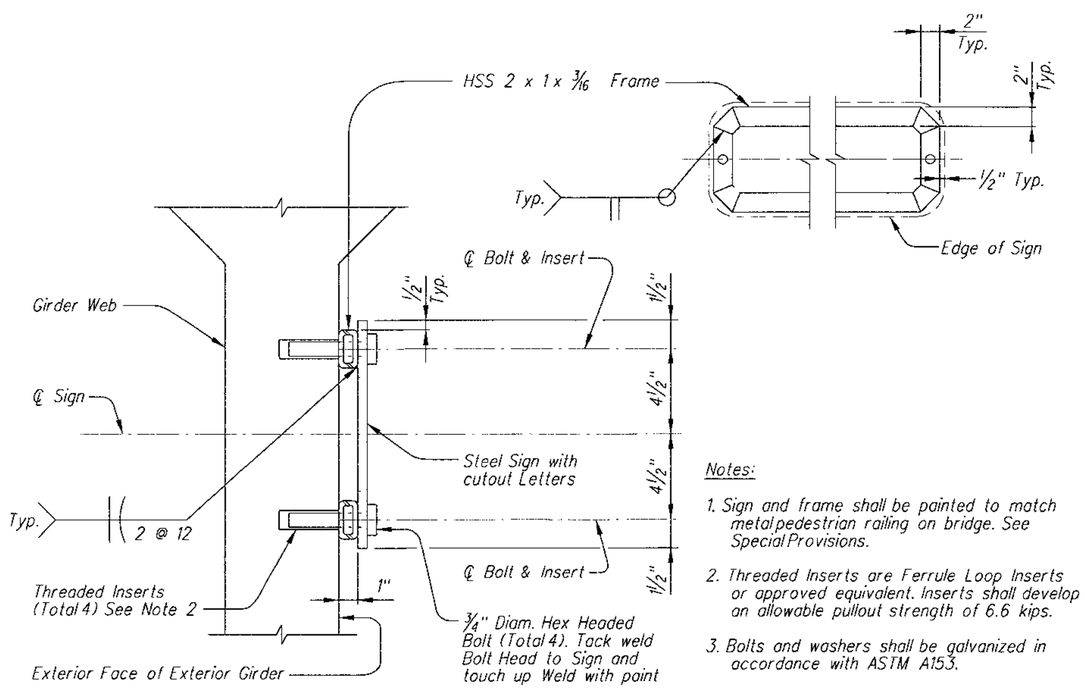

Notes:

1. Sign and frame shall be painted to match metal pedestrian railing on bridge. See Special Provisions.
2. Threaded Inserts are Ferrule Loop Inserts or approved equivalent. Inserts shall develop an allowable pullout strength of 6.6 kips.
3. Bolts and washers shall be galvanized in accordance with ASTM A153.

SECTION – STEEL SIGN ON GIRDER (4)

Scale 3"=1'-0"

Date: 08\20\09

File: C:\PWworking\PHX\dms42758\20S-B39.dgn

Scales	Horiz. 1"= / Vert. N/A	Sheet	S39 of S58	Page	276 of 356

Pima County Department of Transportation

Priscilla S. Cornelio, P.E. Director

No.	Revision Description	Engineer	Date

		Date
Designed	ERM, SST	8/09
Drawn	TRK	8/09
Checked	TWB	8/09
Proj. Engr.	TWB	8/09

Registered Professional Engineer, Certificate No. 29368, Ted W. Buehler, Arizona U.S.A. Signed 8-21-09. Expires 09-30-2010

HDR Engineering, Inc.
5210 East Williams Circle, Suite 530
Tucson, AZ 85711-4459
(520) 584-3600

MISCELLANEOUS DETAILS
LA CHOLLA BOULEVARD BRIDGE
RUTHRAUFF RD. TO RIVER RD.
PROJECT NO. 4LCITR

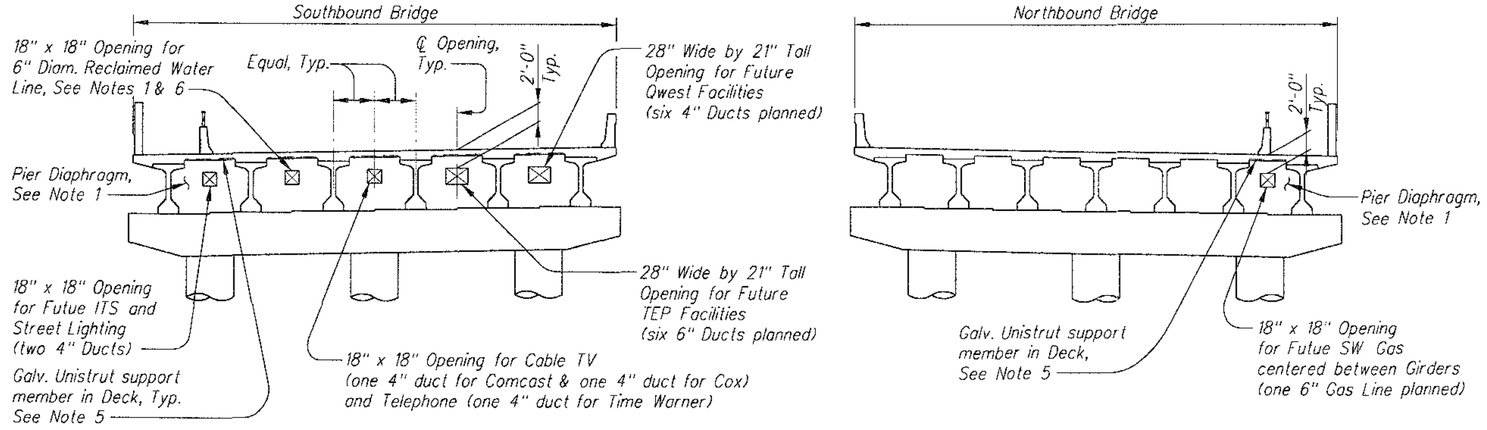

DETAIL – UTILITY OPENING SIZE AND LOCATION (1)

No Scale

Utility Opening and Support Notes:

1. The openings shown in Detail 1, this sheet are in the pier diaphragm. Contractor shall also provide the same size openings in the abutment backwalls, abutment diaphragms and the intermediate diaphragms, except an opening shall not be provided in the abutment diaphragms for the 6" reclaimed water line as this line will be placed in front of the abutment as shown on the Landscaping Drawings.
2. For reinforcing around the openings, see respective abutment and pier details.
3. Provide expansion joints on all utility lines. At a minimum locate expansion joints adjacent to abutments. Expansion joints shall be able to accommodate the full movement rating of the bridge expansion joints. See Deck Joint Detail 2 on Sheet S39 for additional information regarding bridge movement.
4. Hanger rods shall conform to ASTM A307 and galvanized in accordance with ASTM A153.
5. Contractor shall install galvanized P3259 Unistrut support members in bridge deck at 5'-0" on center and at 2'-6" max. from abutment and pier diaphragms in each bay where utility blockouts are shown in Detail 1 on this sheet.
6. Contractor to install 6" reclaimed waterline and provide hanger assembly. The utility companies will provide hanger assemblies for their own new and future facilities.
7. The utility companies, except for Tucson Electric Power (TEP), are responsible for installing conduit beneath the approach slabs through the utility openings in the abutments. The Contractor is responsible for applying the mastic seal around the ducts. The Contractor shall provide 14 days notice to all utility companies prior to completing the subgrade for the approach slabs. The utility companies shall be given 14 days after the 14 day notice to complete their respective installations. Conduits for future ITS, Street Lighting and for TEP shall be installed by the Contractor. See Special Provisions.
8. The cost of installing the diaphragm openings, Unistrut inserts, hanger assemblies, and other items shown on this sheet is considered incidental to the cost of the bridge deck concrete.

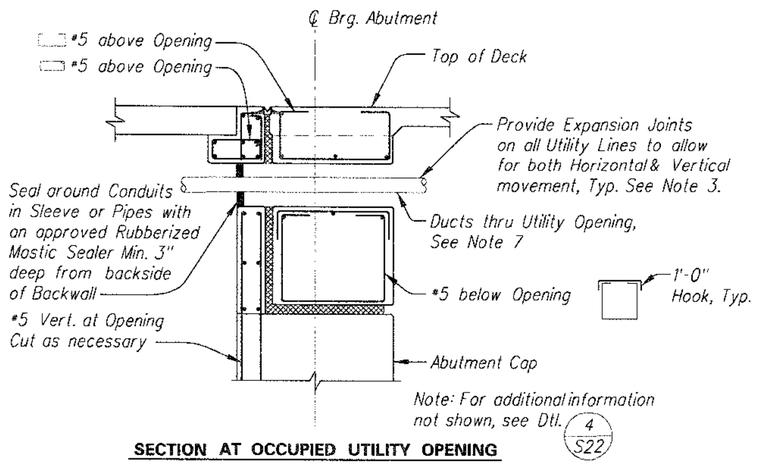

SECTION AT OCCUPIED UTILITY OPENING

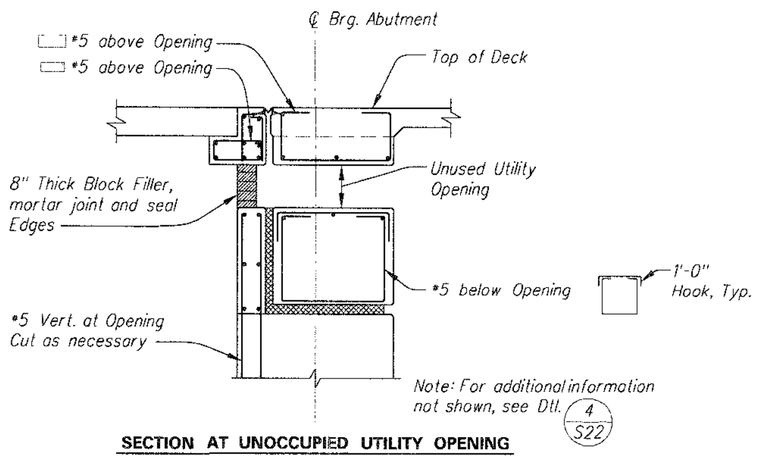

SECTION AT UNOCCUPIED UTILITY OPENING

DETAIL AT ABUTMENT BACKWALL (2)

No Scale

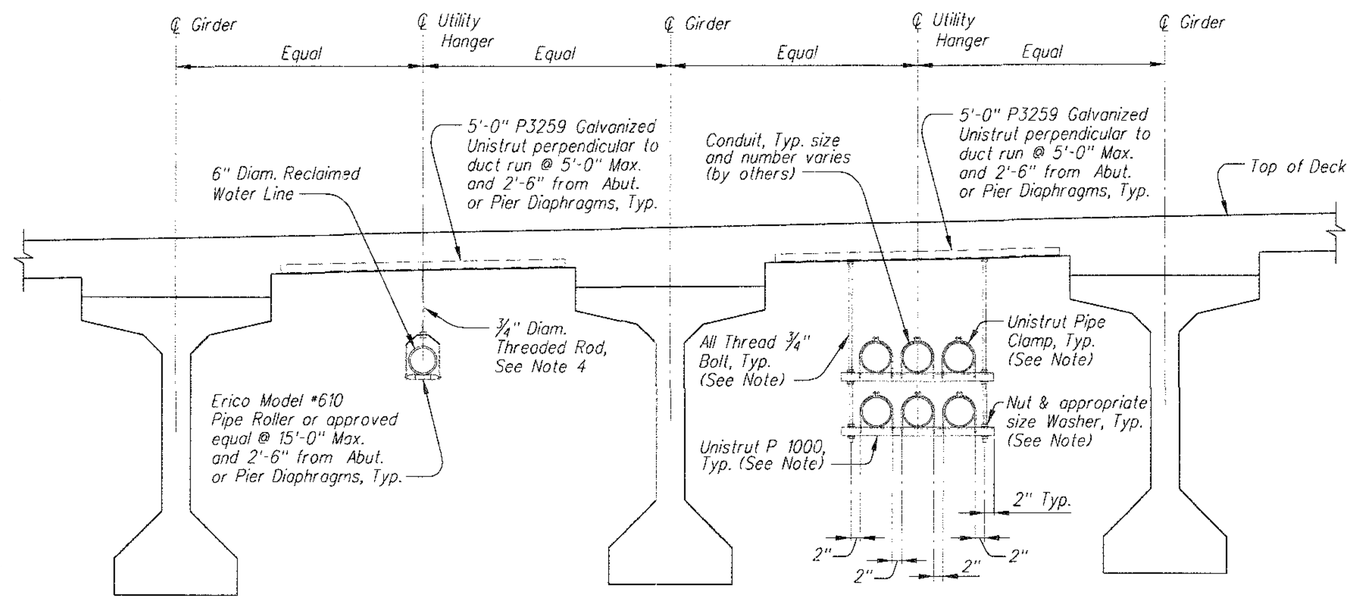

AT 6" RECLAIMED WATER LINE **AT ELEC. OR OTHER CONDUIT**

Note:

Contractor to provide & install conduit hanger assembly for future ITS & traffic signals. Utility companies to provide and install hanger assembly for their facilities.

TYPICAL UTILITY ASSEMBLY DETAIL (3)

No Scale

No.	Revision Description	Engineer	Date

		Date
Designed	ERM, SST	8/09
Drawn	TRK	8/09
Checked	TWB	8/09
Proj. Engr.	TWB	8/09

Registered Professional Engineer (Civil) CERTIFICATE NO. 29368 TED W. BUELL Date Signed ARIZONA U.S.A. Expires 09-30-2010

HDR Engineering, Inc. 5210 East Williams Circle, Suite 530 Tucson, AZ 85711-4459 (520) 584-3600

Priscilla S. Cornelio, P.E. Director

Pima County Department of Transportation

UTILITY OPENING & SUPPORT DTLS.
LA CHOLLA BOULEVARD BRIDGE
RUTHRAUFF RD. TO RIVER RD.
PROJECT NO. 4LCITR

Date: 08\20\09

File: C:\PWworking\PHX\dms42758\20S-B40.dgn

Scales	Horiz. 1"= / Vert. N/A	Sheet S40 of S58	Page 277 of 356

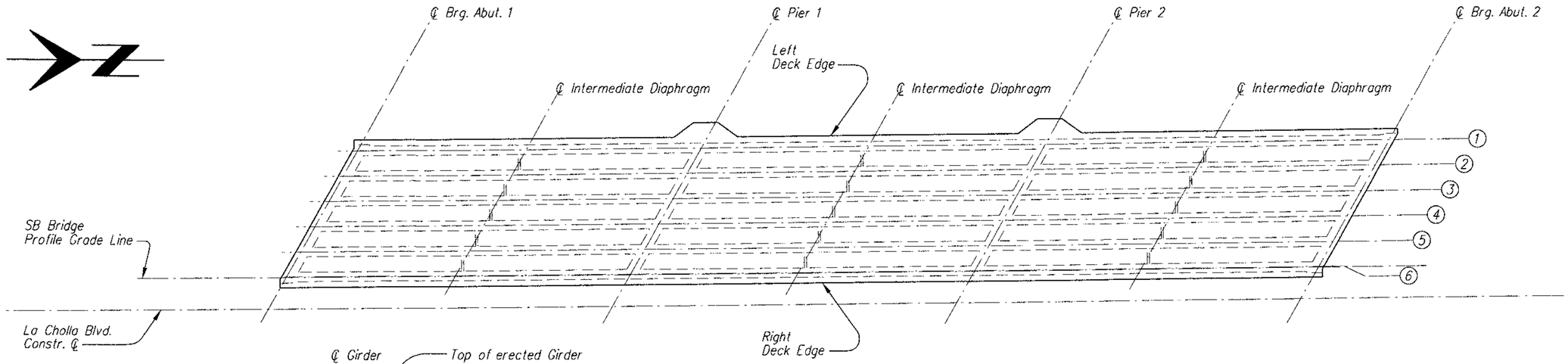

PLAN - SOUTHBOUND BRIDGE

No Scale

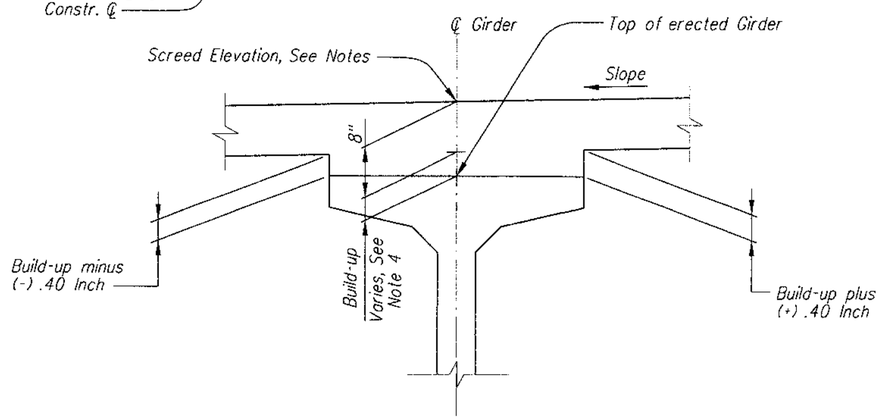

TYPICAL SECTION AT GIRDER

No Scale

Southbound Deflections (Ft.)										
	Span	0.1	0.2	0.3	0.4	0.5	0.6	0.7	0.8	0.9
At Transfer ↑	1 - 3									
Initial ↑	1 - 3	0.167	0.287	0.368	0.414	0.430	0.414	0.368	0.287	0.167
Final ↓	1	0.072	0.135	0.183	0.211	0.216	0.200	0.165	0.115	0.057
	2	0.052	0.103	0.144	0.171	0.180	0.171	0.144	0.103	0.052
	3	0.057	0.115	0.165	0.200	0.216	0.211	0.183	0.135	0.072

↑ Indicates Upward Deflection

↓ Indicates Downward Deflection

SCREED NOTES:

1. Screed elevations are based on estimated long-term girder deflection due to dead load and prestress.

2. Screed elevations may have to be adjusted to accommodate as-built conditions or girder profile at the time of deck placement. Adjustments to the screed elevations will require approval of the Engineer.

   The Contractor shall cooperate & provide safe access for PCDOT Surveyors to verify as-built girder bearing seat elevations (top of concrete) at abutments & piers, and top of erected girder elevations at ℄ bearings and midspan for review prior to proceeding with forming the deck. Upon review, the Engineer will advise the Contractor of any adjustments that are warranted.

3. Screed elevations are provided at tenth points of the spans. (See Sheet S42) Intermediate points may be linearly interpolated. (DO NOT USE FINISHED GRADE ELEVATIONS FOR SETTING SCREEDS).

4. The build-up dimension varies along girder. Build-up shall be calculated based on the measured elevations at the top of erected girder.
   Build-up = Screed Elevation - Deck Slab Thickness - Elevation at Top of Girder. The Build-up dimension at the edges of girder varies with the cross slope of the deck as shown in the typical section this sheet.

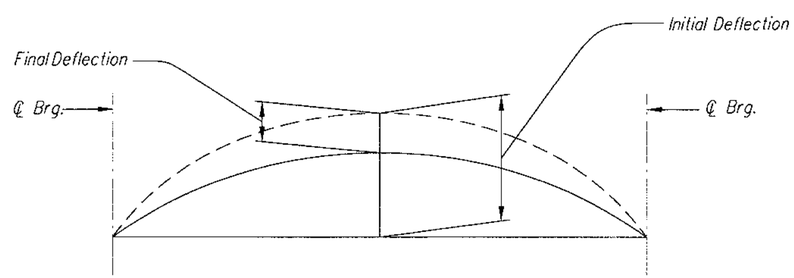

CAMBER DIAGRAM

No Scale

DEFLECTION NOTES:

1. Deflection at Transfer is the field measured deflection of a typical girder immediately after transfer of the prestress force. Blank spaces have been provided in the table for recording these deflections for As-Built information.

2. Initial Deflection is the deflection the prestressed girder undergoes at the time of erection prior to the diaphragm or deck pours. The Initial Deflection includes the deflection due to the dead load of the girder, the initial prestressing and the effects of creep & shrinkage up to the time of erection. (Assumed at 60 days after release).

3. Final Deflection is the deflection due to the dead load of the deck slab, diaphragms, and barriers and the effects of long-term creep on the composite girders.

Priscilla S. Cornelio, P.E. Director

No.	Revision Description	Engineer	Date

		Date
Designed	ERM, SST	8/09
Drawn	TRK	8/09
Checked	TWB	8/09
Proj. Engr.	TWB	8/09

Registered Professional Engineer CERTIFICATE NO. 29368 TED W. BUELL Date Signed 8-26-09 ARIZONA U.S.A.

Expires 09-30-2010

HDR Engineering, Inc. 5210 East Williams Circle, Suite 530 Tucson, AZ 85711-4459 (520) 394-3600

Pima County Department of Transportation

SB SCREED ELEVATIONS
LA CHOLLA BOULEVARD BRIDGE
RUTHRAUFF RD. TO RIVER RD.
PROJECT NO. 4LCITR

Date: 08\20\09

File: C:\PWworking\PHX\dms42758\20S-B41.dgn

Scales	Horiz. 1"= Vert. N/A	Sheet S41 of S58	Page 278 of 356

Southbound Bridge Screed Elevations

Location	℄ Brg. Abut. 1	0.1 pt	0.2 pt	0.3 pt	0.4 pt	0.5 pt	0.6 pt	0.7 pt	0.8 pt	0.9 pt	℄ Pier 1	0.1 pt	0.2 pt	0.3 pt	0.4 pt	0.5 pt	0.6 pt	0.7 pt	0.8 pt	0.9 pt	℄ Pier 2
Left Edge of Deck	2270.07	2270.23	2270.37	2270.48	2270.56	2270.62	2270.63	2270.63	2270.58	2270.54	2270.48	2270.51	2270.54	2270.54	2270.53	2270.49	2270.41	2270.31	2270.18	2270.04	2269.89
Girder 1	2270.13	2270.29	2270.43	2270.54	2270.63	2270.69	2270.70	2270.70	2270.66	2270.62	2270.55	2270.59	2270.62	2270.63	2270.61	2270.57	2270.50	2270.40	2270.28	2270.13	2269.98
Girder 2	2270.26	2270.42	2270.58	2270.69	2270.78	2270.84	2270.86	2270.86	2270.83	2270.79	2270.73	2270.77	2270.80	2270.81	2270.81	2270.77	2270.70	2270.60	2270.49	2270.35	2270.20
Girder 3	2270.40	2270.56	2270.72	2270.83	2270.93	2270.99	2271.02	2271.03	2270.99	2270.96	2270.90	2270.95	2270.99	2271.00	2271.00	2270.96	2270.90	2270.81	2270.69	2270.56	2270.42
Girder 4	2270.53	2270.70	2270.86	2270.98	2271.08	2271.15	2271.18	2271.19	2271.16	2271.13	2271.08	2271.13	2271.17	2271.19	2271.19	2271.16	2271.10	2271.01	2270.90	2270.77	2270.63
Girder 5	2270.66	2270.83	2270.99	2271.12	2271.22	2271.30	2271.33	2271.34	2271.32	2271.29	2271.25	2271.30	2271.35	2271.37	2271.38	2271.35	2271.29	2271.21	2271.10	2270.98	2270.84
Girder 6	2270.78	2270.96	2271.13	2271.26	2271.37	2271.44	2271.48	2271.50	2271.48	2271.46	2271.42	2271.48	2271.52	2271.55	2271.56	2271.54	2271.49	2271.41	2271.31	2271.18	2271.05
Profile Grade Line	2270.79	2270.96	2271.13	2271.26	2271.37	2271.45	2271.49	2271.50	2271.48	2271.46	2271.42	2271.48	2271.53	2271.56	2271.56	2271.54	2271.49	2271.41	2271.31	2271.19	2271.06
Right Edge of Deck	2270.84	2271.02	2271.19	2271.32	2271.43	2271.51	2271.55	2271.57	2271.55	2271.53	2271.49	2271.55	2271.60	2271.63	2271.64	2271.62	2271.57	2271.49	2271.39	2271.27	2271.14

Southbound Bridge Screed Elevations

Location	℄ Pier 2	0.1 pt	0.2 pt	0.3 pt	0.4 pt	0.5 pt	0.6 pt	0.7 pt	0.8 pt	0.9 pt	℄ Brg. Abut. 2
Left Edge of Deck	2269.89	2269.83	2269.76	2269.69	2269.57	2269.44	2269.27	2269.06	2268.84	2268.58	2268.30
Girder 1	2269.98	2269.93	2269.86	2269.79	2269.67	2269.54	2269.37	2269.17	2268.95	2268.69	2268.41
Girder 2	2270.20	2270.15	2270.08	2270.02	2269.91	2269.78	2269.61	2269.42	2269.20	2268.94	2268.67
Girder 3	2270.42	2270.37	2270.31	2270.25	2270.14	2270.02	2269.86	2269.66	2269.45	2269.20	2268.93
Girder 4	2270.63	2270.59	2270.53	2270.47	2270.37	2270.25	2270.09	2269.91	2269.70	2269.45	2269.19
Girder 5	2270.84	2270.81	2270.75	2270.70	2270.60	2270.49	2270.33	2270.15	2269.94	2269.70	2269.44
Girder 6	2271.05	2271.02	2270.97	2270.92	2270.83	2270.72	2270.57	2270.39	2270.19	2269.95	2269.70
Profile Grade Line	2271.06	2271.03	2270.98	2270.92	2270.83	2270.72	2270.57	2270.39	2270.19	2269.95	2269.70
Right Edge of Deck	2271.14	2271.11	2271.07	2271.02	2270.93	2270.82	2270.67	2270.49	2270.29	2270.05	2269.80

Priscilla S. Cornelio, P.E. Director

Designed	EFM, SST		8/09
Drawn	TBK		8/09
Checked	TWB		8/09
Proj. Engr.	TWB		8/09

No.	Revision Description	Engineer	Date

Expires 09-30-2010

HDR Engineering, Inc.
5210 East Williams Circle, Suite 530
Tucson, AZ 85711-4459
(520) 294-3000

Pima County Department of Transportation

SB SCREED ELEVATIONS
LA CHOLLA BOULEVARD BRIDGE
RUTHRAUFF RD. TO RIVER RD.
PROJECT NO. 4LCITR

Date: 08\20\09

File: C:\PWworking\PHX\dms42758\20S-B42.dgn

Scales	Horiz. 1"= Vert. N/A	Sheet S42 of S58	Page 279 of 356

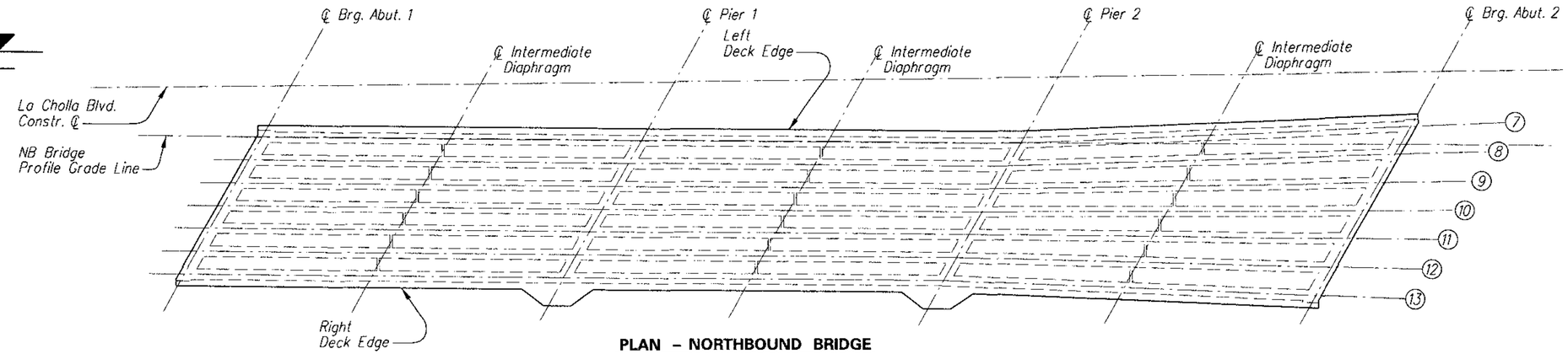

PLAN – NORTHBOUND BRIDGE

No Scale

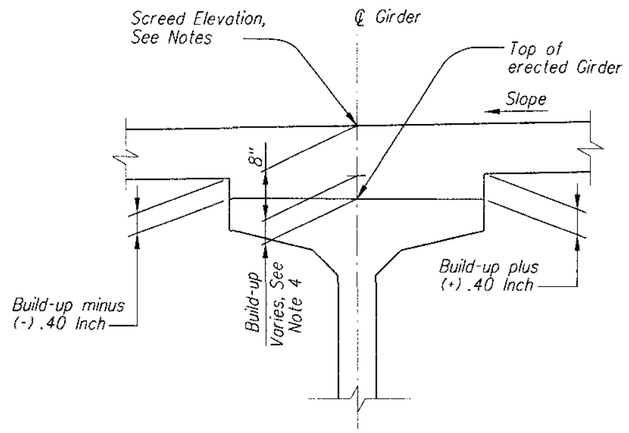

TYPICAL SECTION AT GIRDER

No Scale

Northbound Deflections (ft)											
	Span	Girder Line	0.1	0.2	0.3	0.4	0.5	0.6	0.7	0.8	0.9
At Transfer ↑	1 & 2	7-13									
Initial ↑	1 & 2	7-13	0.143	0.243	0.310	0.347	0.360	0.347	0.310	0.243	0.143
Final ↓	1	7-13	0.093	0.173	0.232	0.265	0.268	0.243	0.195	0.130	0.060
	2	7-13	0.050	0.099	0.140	0.166	0.175	0.166	0.140	0.099	0.050
At Transfer ↑	3	7									
Initial ↑	3	7	0.170	0.292	0.373	0.420	0.435	0.420	0.373	0.292	0.170
Final ↓	3	7	0.065	0.139	0.207	0.258	0.284	0.280	0.246	0.183	0.098
At Transfer ↑	3	8									
Initial ↑	3	8	0.169	0.290	0.371	0.417	0.432	0.417	0.371	0.290	0.169
Final ↓	3	8	0.063	0.135	0.201	0.250	0.275	0.271	0.238	0.177	0.095
At Transfer ↑	3	9									
Initial ↑	3	9	0.167	0.288	0.368	0.415	0.430	0.415	0.368	0.288	0.167
Final ↓	3	9	0.061	0.130	0.194	0.242	0.266	0.262	0.230	0.171	0.092
At Transfer ↑	3	10									
Initial ↑	3	10	0.166	0.286	0.366	0.412	0.427	0.412	0.366	0.286	0.166
Final ↓	3	10	0.059	0.126	0.188	0.234	0.257	0.254	0.223	0.166	0.089
At Transfer ↑	3	11									
Initial ↑	3	11	0.165	0.283	0.363	0.409	0.424	0.409	0.363	0.283	0.165
Final ↓	3	11	0.057	0.122	0.182	0.226	0.248	0.245	0.215	0.160	0.085
At Transfer ↑	3	12									
Initial ↑	3	12	0.163	0.281	0.361	0.407	0.422	0.407	0.361	0.281	0.163
Final ↓	3	12	0.055	0.117	0.175	0.218	0.239	0.236	0.207	0.154	0.082
At Transfer ↑	3	13									
Initial ↑	3	13	0.162	0.279	0.358	0.404	0.419	0.404	0.358	0.279	0.162
Final ↓	3	13	0.053	0.113	0.169	0.210	0.230	0.227	0.199	0.148	0.079

↑ Indicates Upward Deflection ↓ Indicates Downward Deflection

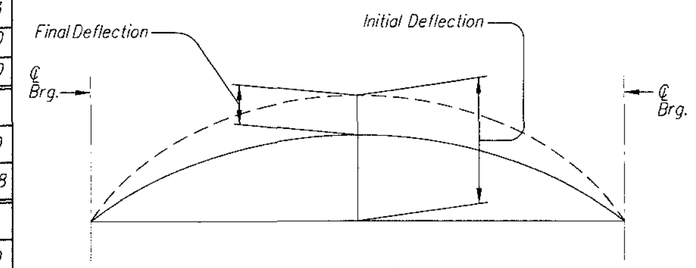

CAMBER DIAGRAM

No Scale

SCREED NOTES:

1. Screed elevations are based on estimated long-term girder deflection due to dead load and prestress.

2. Screed elevations may have to be adjusted to accommodate as-built conditions or girder profile at the time of deck placement. Adjustments to the screed elevations will require approval of the Engineer.

   The Contractor shall cooperate & provide safe access for PCDOT Surveyors to verify as-built girder bearing seat elevations (top of concrete) at abutments & piers, and top of erected girder elevations at ℄ bearings and midspan for review prior to proceeding with forming the deck. Upon review, the Engineer will advise the Contractor of any adjustments that are warranted.

3. Screed elevations are provided at tenth points of the spans. (See Sheet S44) Intermediate points may be linearly interpolated. (DO NOT USE FINISHED GRADE ELEVATIONS FOR SETTING SCREEDS).

4. The build-up dimension varies along girder. Build-up shall be calculated based on the measured elevations at the top of erected girder.
   Build-up = Screed Elevation - Deck Slab Thickness - Elevation at Top of Girder. The Build-up dimension at the edges of girder varies with the cross slope of the deck as shown in the typical section this sheet.

DEFLECTION NOTES:

1. Deflection at Transfer is the field measured deflection of a typical girder immediately after transfer of the prestress force. Blank spaces have been provided in the table for recording these deflections for As-Built information.

2. Initial Deflection is the deflection the prestressed girder undergoes at the time of erection prior to the diaphragm or deck pours. The Initial Deflection includes the deflection due to the dead load of the girder, the initial prestressing and the effects of creep & shrinkage up to the time of erection. (Assumed at 60 days after release).

3. Final Deflection is the deflection due to the dead load of the deck slab, diaphragms, and barriers and the effects of long-term creep on the composite girders.

Priscilla S. Cornelio, P.E. Director

	Designed	CRM, SST	8/09
	Drawn	TRK	8/09
	Checked	TWB	8/09
	Proj. Engr.	TWB	8/09

No.	Revision Description	Engineer	Date

Registered Professional Engineer CERTIFICATE NO. 29368 TED W. BUBALO Date Signed 9-24-09 ARIZONA U.S.A.

Expires 09-30-2010

HDR Engineering, Inc.
5210 East Williams Circle, Suite 530
Tucson, AZ 85711-4459
(520) 384-3600

Pima County Department of Transportation

NB SCREED ELEVATIONS
LA CHOLLA BOULEVARD BRIDGE
RUTHRAUFF RD. TO RIVER RD.
PROJECT NO. 4LCITR

Scales	Horiz. 1"= Vert. N/A	Sheet S43 of S58	Page 280 of 356

Date: 08\20\09

File: C:\PWworking\PHX\dms42758\20S-B43.dgn

Bridge Screed Elevations

Location	℄ Brg. Abut. 1	0.1 pt	0.2 pt	0.3 pt	0.4 pt	0.5 pt	0.6 pt	0.7 pt	0.8 pt	0.9 pt	℄ Pier 1	0.1 pt	0.2 pt	0.3 pt	0.4 pt	0.5 pt	0.6 pt	0.7 pt	0.8 pt	0.9 pt	℄ Pier 2
Left Edge of Deck	2270.63	2270.83	2271.02	2271.17	2271.28	2271.37	2271.40	2271.41	2271.39	2271.36	2271.33	2271.39	2271.45	2271.48	2271.50	2271.49	2271.45	2271.37	2271.28	2271.17	2271.05
Profile Grade Line	2270.56	2270.76	2270.94	2271.10	2271.21	2271.30	2271.33	2271.34	2271.32	2271.29	2271.25	2271.32	2271.38	2271.41	2271.43	2271.42	2271.37	2271.30	2271.21	2271.10	2270.98
Girder 7	2270.53	2270.74	2270.92	2271.08	2271.20	2271.28	2271.32	2271.32	2271.31	2271.28	2271.25	2271.31	2271.37	2271.41	2271.43	2271.42	2271.38	2271.31	2271.22	2271.11	2270.99
Girder 8	2270.35	2270.56	2270.74	2270.90	2271.02	2271.11	2271.15	2271.16	2271.15	2271.12	2271.09	2271.16	2271.23	2271.27	2271.29	2271.28	2271.24	2271.18	2271.09	2270.98	2270.87
Girder 9	2270.16	2270.37	2270.56	2270.73	2270.85	2270.94	2270.98	2271.00	2270.99	2270.96	2270.94	2271.01	2271.08	2271.12	2271.15	2271.14	2271.11	2271.04	2270.96	2270.86	2270.74
Girder 10	2269.97	2270.19	2270.38	2270.55	2270.67	2270.77	2270.82	2270.83	2270.83	2270.81	2270.78	2270.86	2270.93	2270.98	2271.01	2271.00	2270.97	2270.91	2270.83	2270.73	2270.62
Girder 11	2269.78	2270.00	2270.20	2270.37	2270.50	2270.60	2270.65	2270.67	2270.67	2270.65	2270.63	2270.71	2270.78	2270.83	2270.86	2270.86	2270.84	2270.78	2270.70	2270.60	2270.50
Girder 12	2269.59	2269.81	2270.02	2270.19	2270.32	2270.42	2270.48	2270.50	2270.50	2270.49	2270.47	2270.55	2270.63	2270.68	2270.72	2270.72	2270.70	2270.64	2270.57	2270.48	2270.37
Girder 13	2269.40	2269.63	2269.83	2270.01	2270.14	2270.25	2270.30	2270.33	2270.34	2270.32	2270.31	2270.40	2270.48	2270.53	2270.57	2270.58	2270.56	2270.51	2270.44	2270.35	2270.25
Right Edge of Deck	2269.30	2269.53	2269.73	2269.91	2270.05	2270.16	2270.21	2270.24	2270.25	2270.24	2270.23	2270.32	2270.40	2270.46	2270.50	2270.51	2270.49	2270.44	2270.37	2270.28	2270.18

Bridge Screed Elevations

Location	℄ Pier 2	0.1 pt	0.2 pt	0.3 pt	0.4 pt	0.5 pt	0.6 pt	0.7 pt	0.8 pt	0.9 pt	℄ Brg. Abut. 2
Left Edge of Deck	2271.05	2271.04	2271.04	2271.01	2270.96	2270.87	2270.74	2270.58	2270.37	2270.13	2269.87
Girder 7	2270.99	2270.98	2270.98	2270.95	2270.90	2270.81	2270.69	2270.53	2270.32	2270.08	2269.82
Profile Grade Line	2270.98	2270.95	2270.94	2270.91	2270.85	2270.75	2270.62	2270.44	2270.23	2269.99	2269.73
Girder 8	2270.87	2270.86	2270.85	2270.83	2270.78	2270.70	2270.57	2270.41	2270.21	2269.97	2269.72
Girder 9	2270.74	2270.74	2270.73	2270.70	2270.65	2270.57	2270.44	2270.28	2270.08	2269.86	2269.61
Girder 10	2270.62	2270.61	2270.61	2270.58	2270.52	2270.44	2270.31	2270.16	2269.97	2269.74	2269.50
Girder 11	2270.50	2270.49	2270.47	2270.45	2270.40	2270.31	2270.19	2270.03	2269.85	2269.63	2269.39
Girder 12	2270.37	2270.37	2270.35	2270.32	2270.27	2270.18	2270.07	2269.91	2269.72	2269.51	2269.27
Girder 13	2270.25	2270.23	2270.21	2270.19	2270.13	2270.05	2269.94	2269.78	2269.60	2269.39	2269.16
Right Edge of Deck	2270.18	2270.17	2270.15	2270.13	2270.08	2269.99	2269.88	2269.73	2269.55	2269.34	2269.11

Priscilla S. Cornelio, P.E. Director

No.	Revision Description	Engineer	Date

		Date
Designed	EAM, SST	8/09
Drawn	TRK	8/09
Checked	TWB	8/09
Proj. Engr.	TWB	8/09

Registered Professional Engineer, Commonwealth of Virginia, 29368, Ted W. Buehler, Signature, Date 8-20-09, Arizona U.S.A.

Expires 09-30-2010

HDR Engineering, Inc.
5210 East Williams Circle, Suite 530
Tucson, AZ 85711-4459
(520) 584-3600

Pima County Department of Transportation

NB SCREED ELEVATIONS
LA CHOLLA BOULEVARD BRIDGE
RUTHRAUFF RD. TO RIVER RD.
PROJECT NO. 4LCITR

Date: 08\20\09

File: C:\PWworking\PHX\dms42758\20S-B44.dgn

Scales	Horiz. 1"=	Sheet S44 of S58	Page 281 of 356
	Vert. N/A		

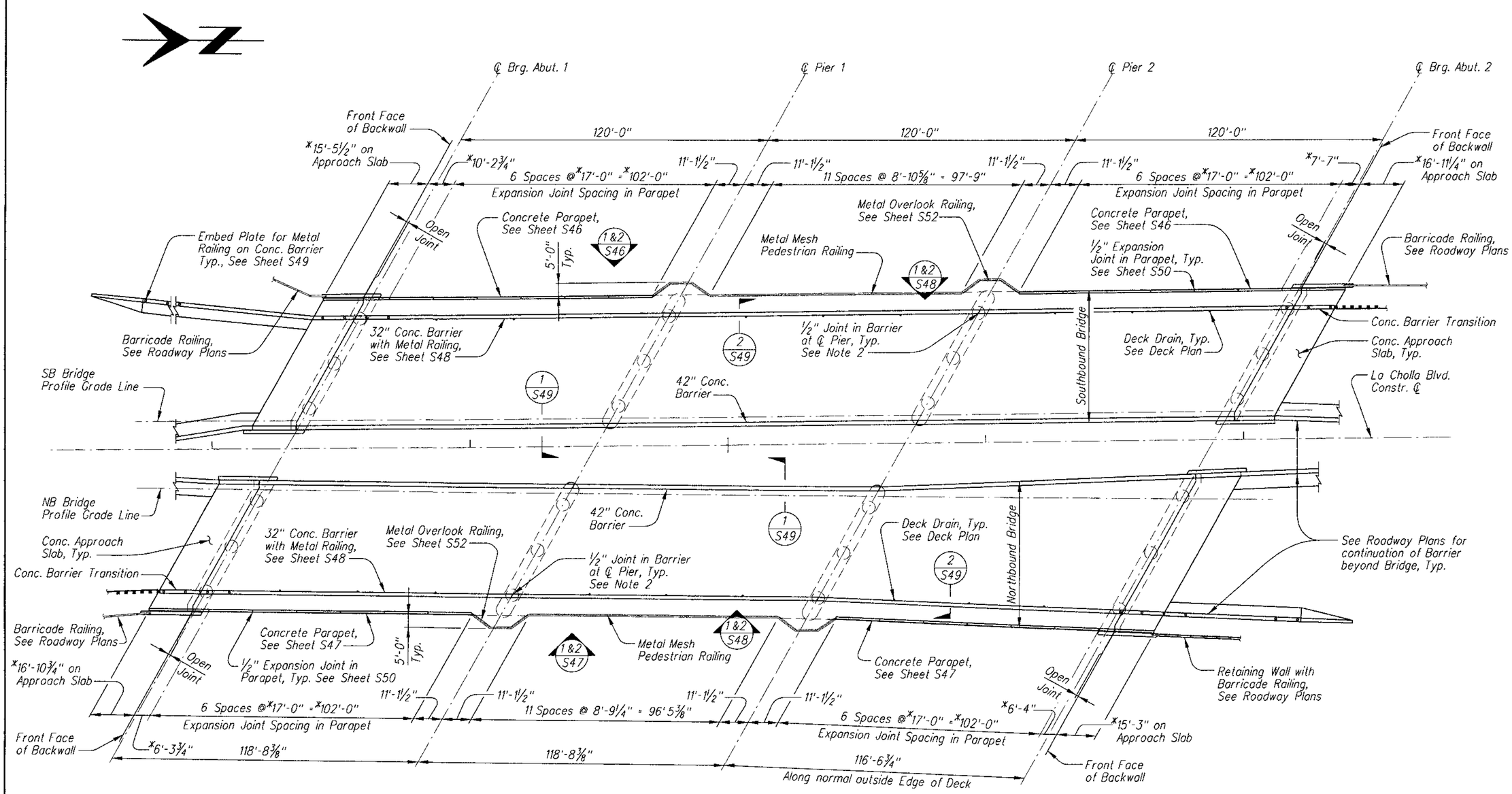

PEDESTRIAN RAILING & CONCRETE BARRIER KEY PLAN

Scale 1"=20'-0"

Notes:

1. Asterisk (*) indicates dimensions shown are measured along outside face of Concrete Parapet.
2. Provide ½" Bituminous Joint Filler in open joints in Barriers over Piers. See ADOT SD 1.01 for 32" Barrier and SD 1.02 for 42" Barrier.
3. See Sheets S54 to S58 for Architectural Treatment details.

No.	Revision Description	Date

		Date
Designed	ERM, SST	8/09
Drawn	TRK	8/09
Checked	TWB	8/09
Proj. Engr.	TWB	8/09

Priscilla S. Cornelio, P.E. Director

Pima County Department of Transportation

Professional Engineer CERTIFICATE NO. 29368 TED W. BUELL ARIZONA U.S.A. Expires 09-30-2010

HDR Engineering, Inc. 5210 East Williams Circle, Suite 530 Tucson, AZ 85711-4459 (520) 584-3600

PED. RAIL. & CONC. BAR. KEY PLAN
LA CHOLLA BOULEVARD BRIDGE
RUTHRAUFF RD. TO RIVER RD.
PROJECT NO. 4LCITR

Scales	Horiz. 1"= / Vert. N/A	Sheet S45 of S58	Page 282 of 356

Date: 08\20\09

File: C:\PWworking\PHX\dms42758\20S-B45.dgn

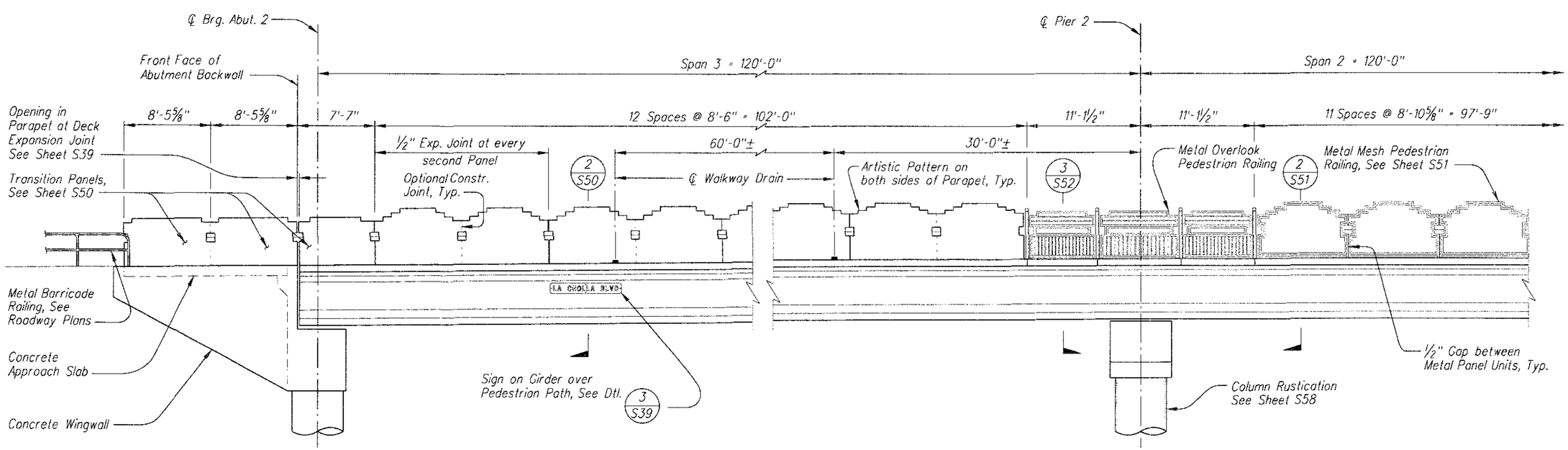

PARTIAL ELEVATION – SOUTHBOUND BRIDGE PEDESTRIAN PARAPET AND METAL RAILING (1)

Scale 3/16"=1'-0" (Looking East)

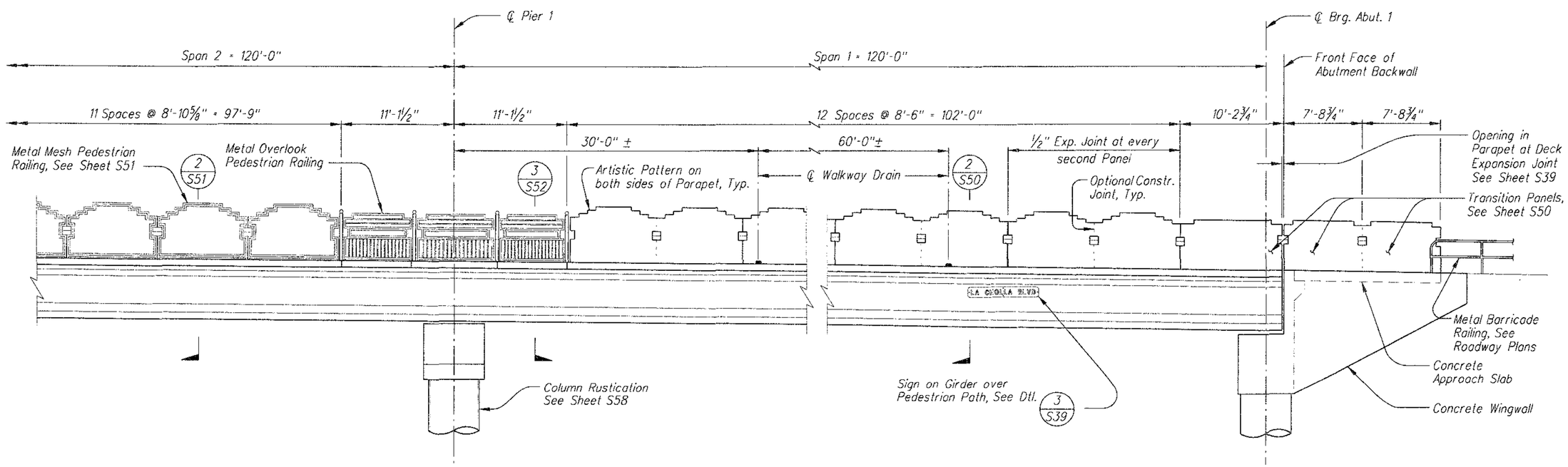

PARTIAL ELEVATION – SOUTHBOUND BRIDGE PEDESTRIAN PARAPET AND METAL RAILING (2)

Scale 3/16"=1'-0" (Looking East)

Priscilla S. Cornelio, P.E. Director

No.	Revision Description	Engineer	Date	Designed	ERM, SST	8/09
				Drawn	TRK	8/09
				Checked	TWB	8/09
				Proj. Engr.	TWB	8/09

Registered Professional Engineer (Civil) CERTIFICATE NO. 29368 TED W. BUELL Date Signed ARIZONA U.S.A. Expires 09-30-2010

HDR Engineering, Inc. 5210 East Williams Circle, Suite 530 Tucson, AZ 85711-4459 (520) 394-3600

Pima County Department of Transportation

SB PED. PARAPET & RAILING
LA CHOLLA BOULEVARD BRIDGE
RUTHRAUFF RD. TO RIVER RD.
PROJECT NO. 4LCITR

Scales	Horiz. 1"= Vert. N/A	Sheet S46 of S58	Page 283 of 356

Date: 08\20\09

File: C:\PWworking\PHX\dms42758\20S-B46.dgn

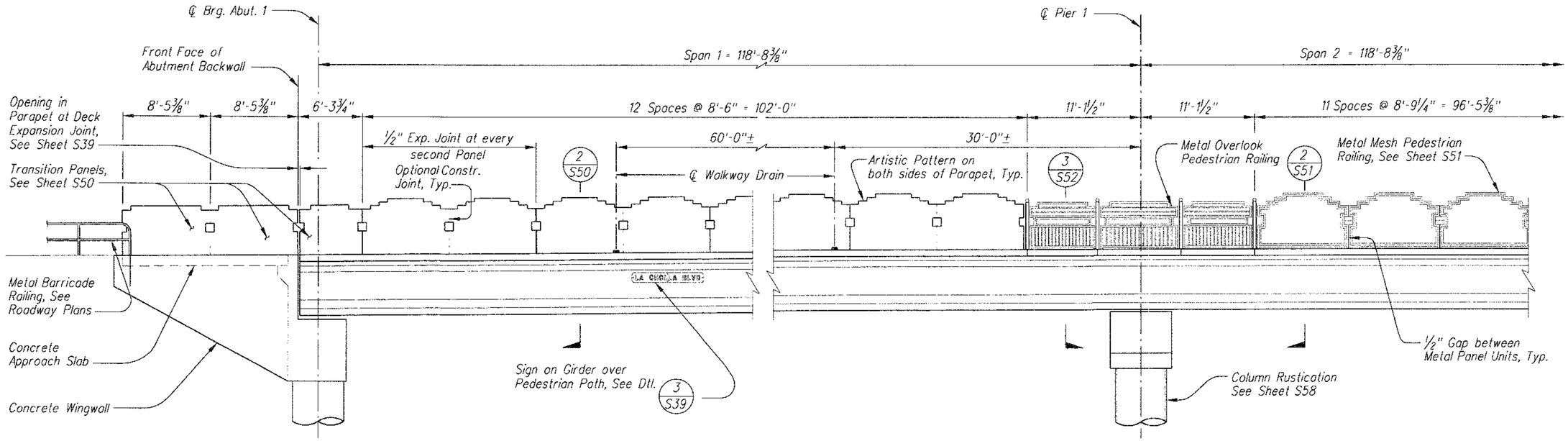

PARTIAL ELEVATION – NORTHBOUND BRIDGE PEDESTRIAN PARAPET AND METAL RAILING (1)

Scale 3/16"=1'-0" (Looking West)

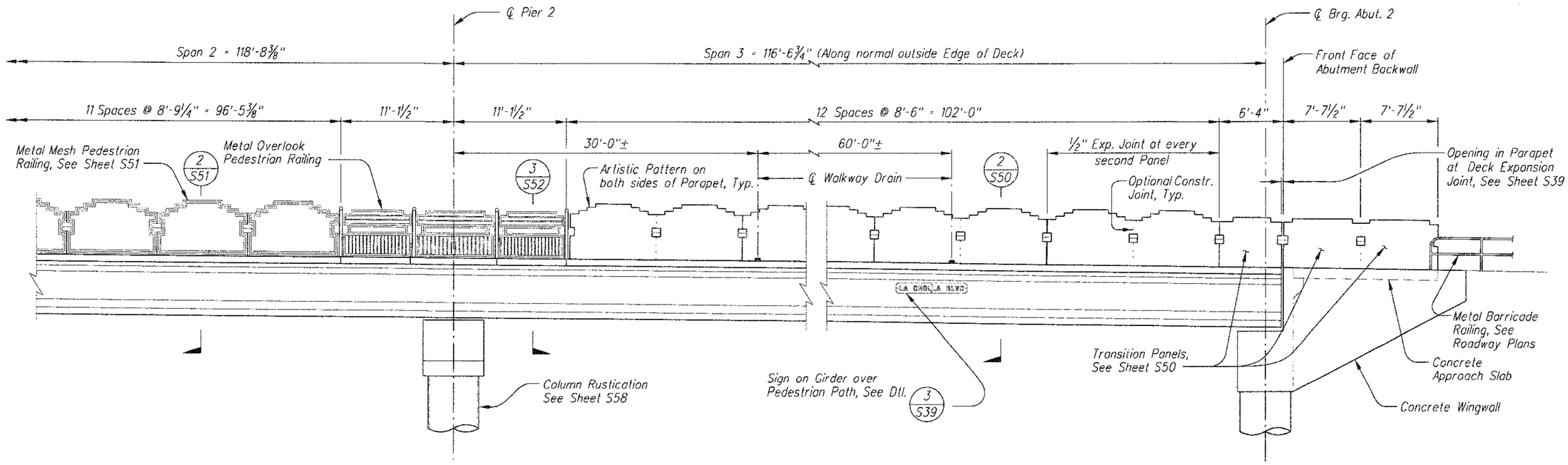

PARTIAL ELEVATION – NORTHBOUND BRIDGE PEDESTRIAN PARAPET AND METAL RAILING (2)

Scale 3/16"=1'-0" (Looking West)

No.	Revision Description	Engineer	Date	Designed	FRM, SST	Date 8/09
				Drawn	TRK	8/09
				Checked	TWB	8/09
				Proj. Engr.	TWB	8/09

Priscilla S. Cornelio, P.E. Director

Registered Professional Engineer (Civil) Certificate No. 29368 TED W. BUELL Date Signed Expires 09-30-2010 ARIZONA U.S.A.

HDR Engineering, Inc. 5210 East Williams Circle, Suite 530 Tucson, AZ 85711-4459 (520) 394-3600

Pima County Department of Transportation

NB PED. PARAPET & RAILING
LA CHOLLA BOULEVARD BRIDGE
RUTHRAUFF RD. TO RIVER RD.
PROJECT NO. 4LCITR

Scales	Horiz. 1"= Vert. N/A	Sheet S47 of S58	Page 284 of 356

Date: 08\20\09

File: C:\PWworking\PHX\dms42758\20S-B47.dgn

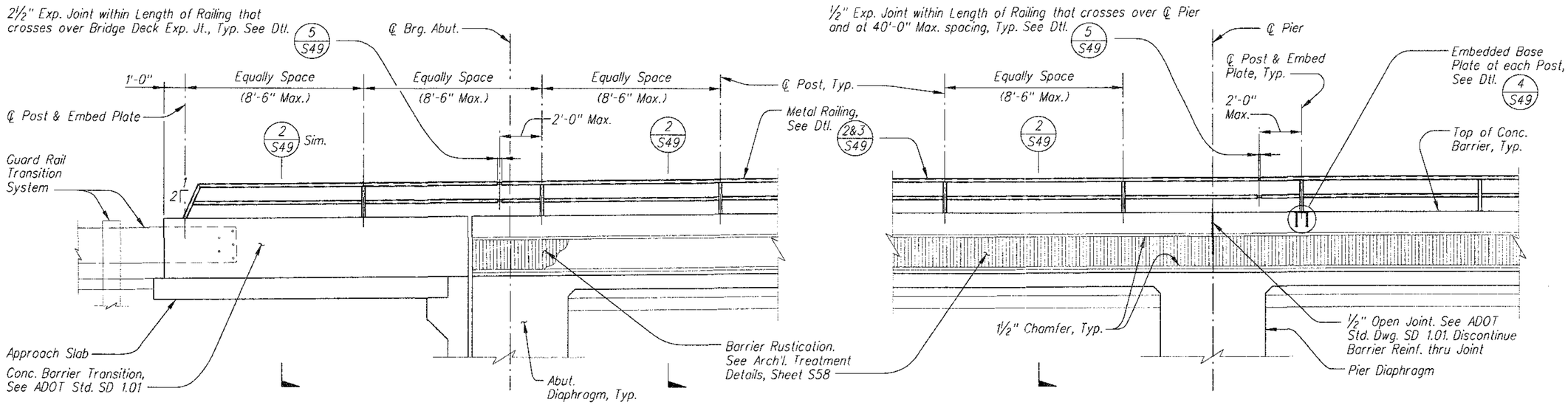

PARTIAL ELEVATION (1)

Scale ⅜"=1'-0" (Looking from Pedestrian Walkway at Back Face of Barrier)

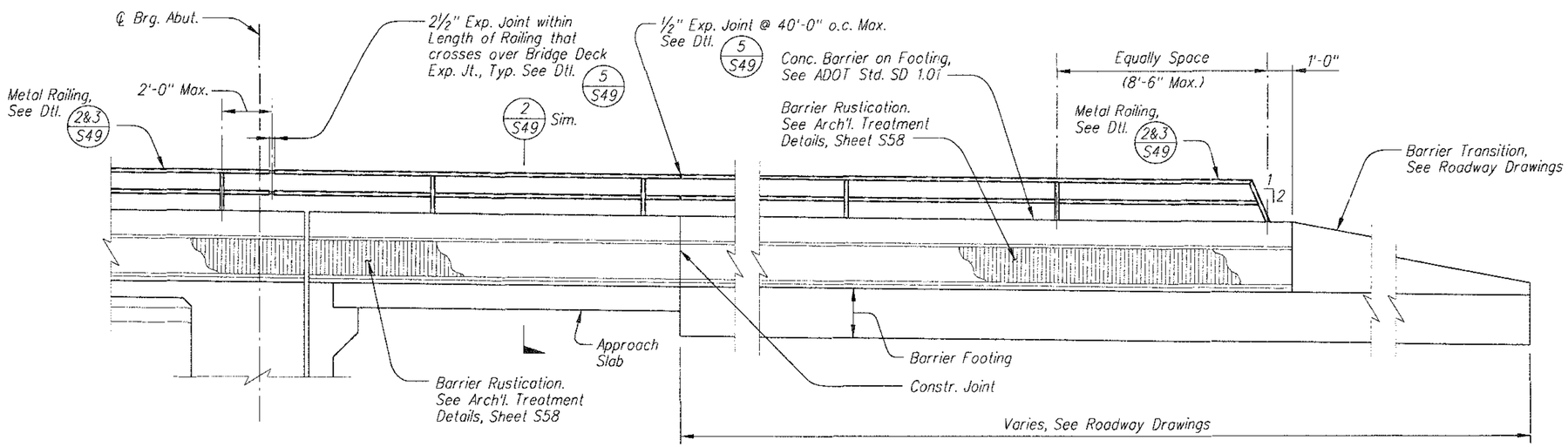

PARTIAL ELEVATION (2)

Scale ⅜"=1'-0" (Looking from Pedestrian Walkway at Back Face of Barrier)

Notes:

1. See General Notes, Sheet S3.
2. Posts shall be installed vertical.
3. Structural steel to be ASTM A36, unless noted otherwise. Structural tubing shall conform to ASTM A500, Grade B (fy = 46,000 psi) unless noted otherwise.
4. Steel stud connectors shall conform to ASTM Grades C-1015, C-1018 or C-1020 cold rolled steel. Solid or granular flux-filled studs shall be used. The studs shall be automatically end welded to the steel plates with complete fusion.
5. All exposed edges shall be gound smooth
6. Weld metal and welding process shall conform to ANSI/AASHTO/AWS Bridge Welding Code, D1.5-2008, revised to date.
7. Metal Railing and embed plates shall be painted with primer coat and two finish coats of paint. Color shall match Metal Mesh Pedestrian Railing. See Special Provisions.
8. Contractor to submit shop drawings, including fabrication details and post layout plan, to the Engineer for review and approval prior to fabrication Metal Railing.

No.	Revision Description	Engineer	Date

		Date
Designed	FRM, SST	8/09
Drawn	TRK	8/09
Checked	TWB	8/09
Proj. Engr.	TWB	8/09

Priscilla S. Cornelio, P.E. Director

Registered Professional Engineer (Civil) CERTIFICATE NO. 29368 TED W. BUELL Date Signed 8/20/09 ARIZONA U.S.A.

Expires 09-30-2010

HDR

HDR Engineering, Inc.
5210 East Williams Circle, Suite 530
Tucson, AZ 85711-4459
(520) 594-3600

Pima County Department of Transportation

CONC. BARRIER WITH METAL RAILING
LA CHOLLA BOULEVARD BRIDGE
RUTHRAUFF RD. TO RIVER RD.
PROJECT NO. 4LCITR

Date: 08\20\09

File: C:\PWworking\PHX\dms42758\20S-B48.dgn

Scales	Horiz. 1"= Verl. N/A	Sheet S48 of S58	Page 285 of 356

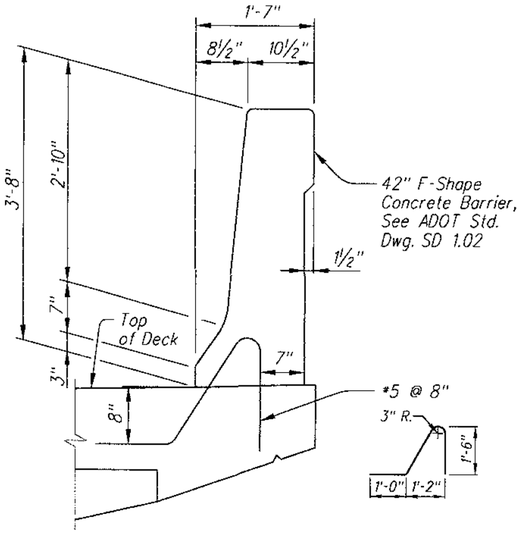

BARRIER AT EDGE OF DECK

DETAIL (1)

Scale 1"=1'-0"

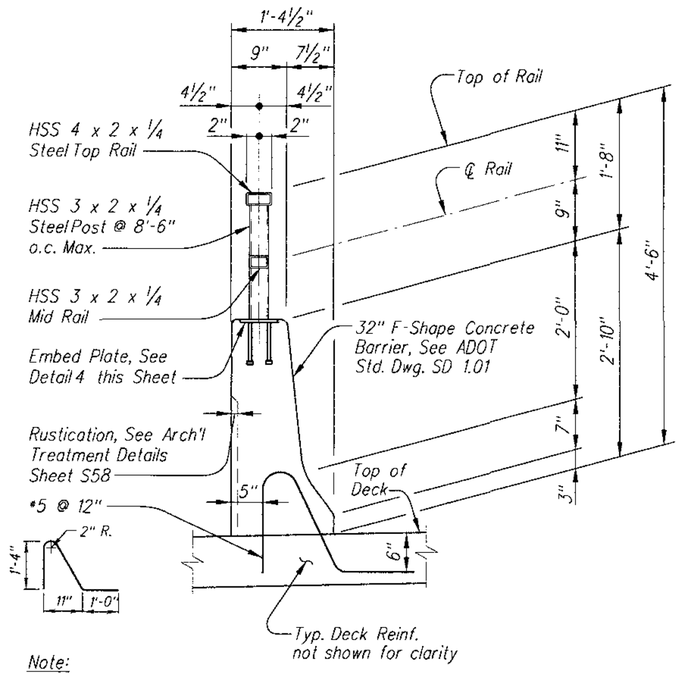

Note:

Metal Railing and Embed Plates to be painted per the Special Provisions.

DETAIL – METAL RAILING ON CONC. BARRIER (2)

Scale 1"=1'-0"

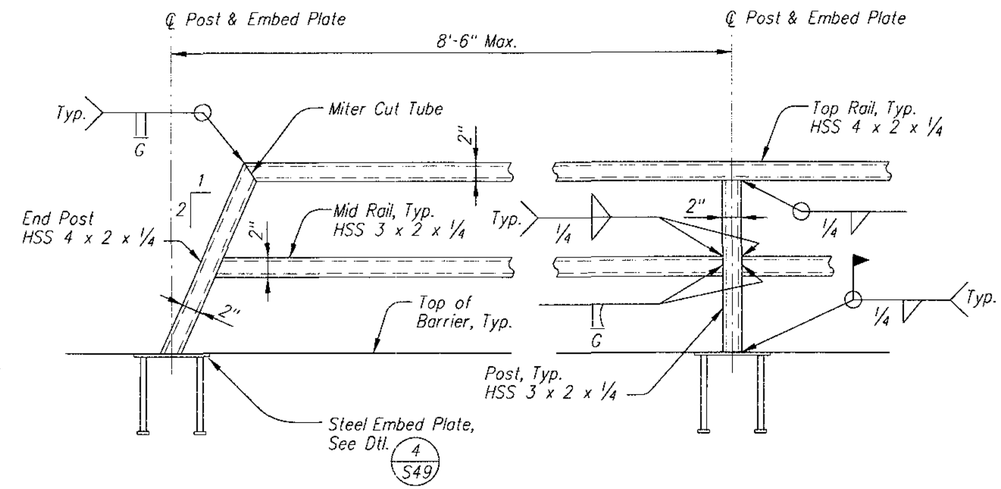

DETAIL – METAL RAILING CONNECTIONS (3)

Scale 1"=1'-0"

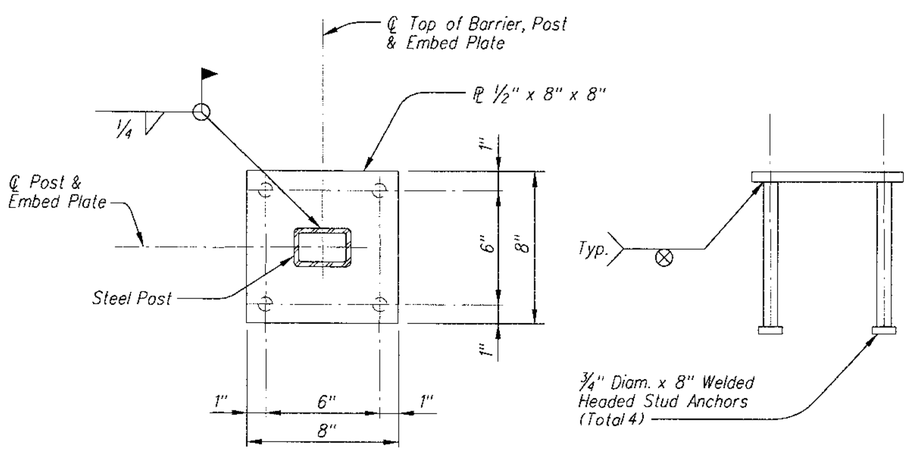

DETAIL – EMBED PLATE (4)

Scale 3"=1'-0"

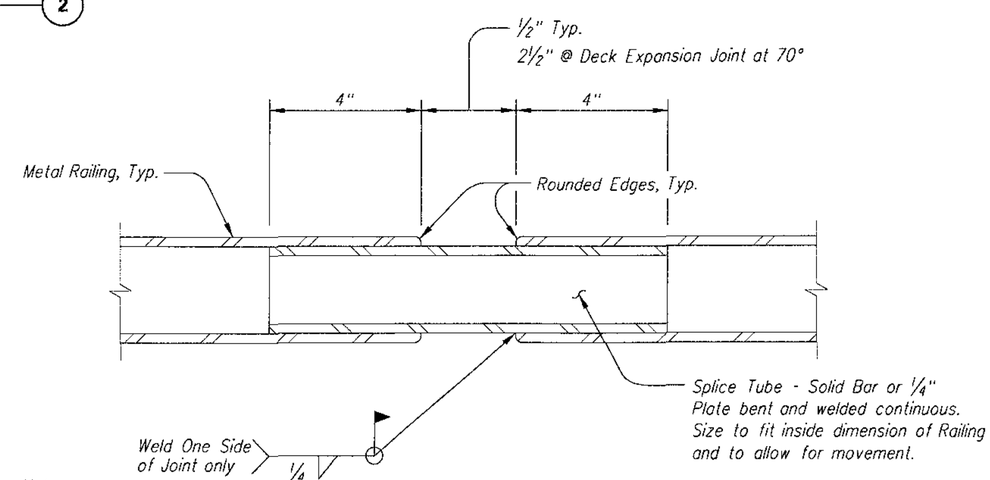

Notes:

1. Provide 2½" Expansion Joint within length of Railing that crosses over Bridge Deck Expansion Joint, Typical.
2. Provide ½" Expansion Joints within Railing that crosses over ℄ Pier, Typical and at 40'-0" maximum spacing.
3. All exposed edges shall be ground smooth.

DETAIL – RAILING EXPANSION JOINT (5)

No Scale

Priscilla S. Cornelio, P.E. Director

No.	Revision Description	Engineer	Date

			Date
Designed	CRM, SST		8/09
Drawn	TRK		8/09
Checked	TWB		8/09
Proj. Engr.	TWB		8/09

Registered Professional Engineer (Civil) CERTIFICATE NO. 29368 TED W. BUELL Date Signed 8-7-09 ARIZONA U.S.A.

Expires 09-30-2010

HDR Engineering, Inc. 5210 East Williams Circle, Suite 530 Tucson, AZ 85711-4459 (520) 394-3600

Pima County Department of Transportation

BARRIER & RAILING DETAILS
LA CHOLLA BOULEVARD BRIDGE
RUTHRAUFF RD. TO RIVER RD.
PROJECT NO. 4LCITR

Scales	Horiz. 1"= Vert. N/A	Sheet S49 of S58	Page 286 of 356

Date: 08\20\09

File: C:\PWworking\PHX\dms42758\20S-B49.dgn

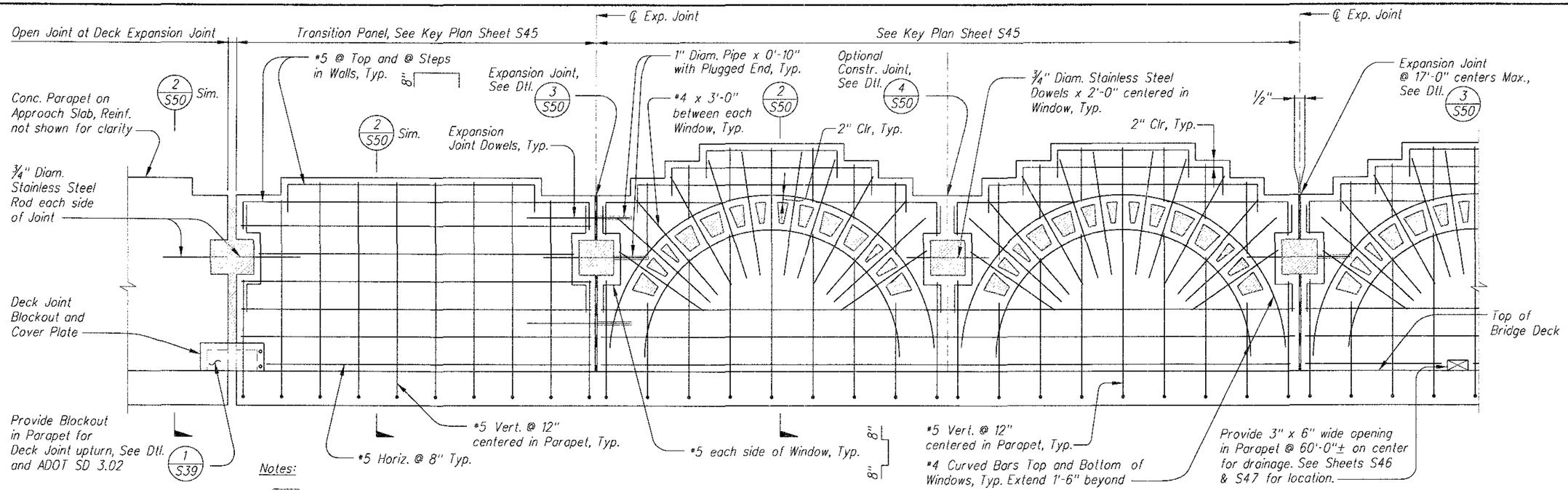

Notes:

1. Shading indicates openings thru Parapet.
2. See Arch'l Treatment Details on Sheets S54 - S58 for dimensions and additional information, etc.

PARTIAL ELEVATION – CONCRETE PARAPET REINFORCING (1)

Scale ¾"=1'-0"

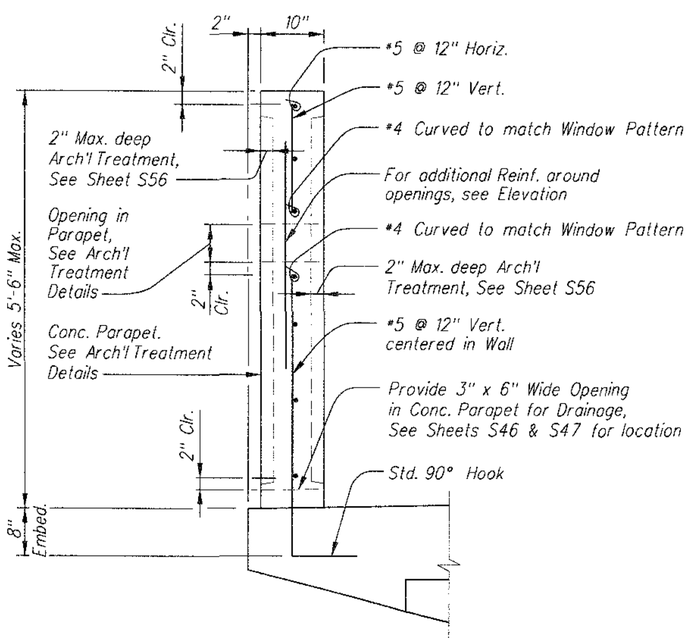

DETAIL – CONCRETE PARAPET (2)

Scale 1"=1'-0"

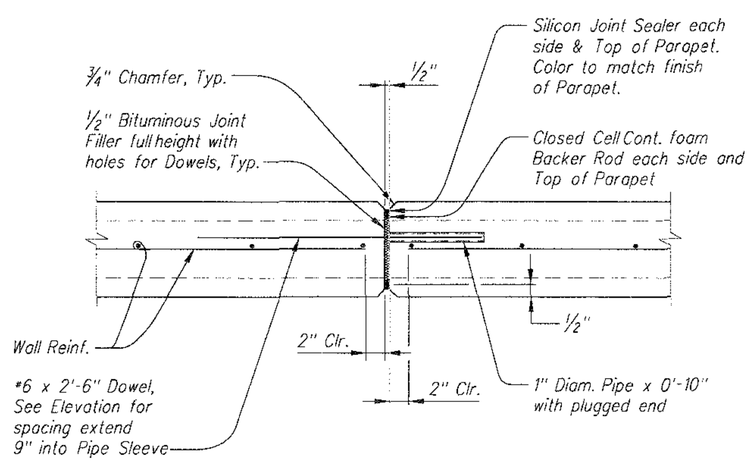

EXPANSION JOINT DETAIL (3)

Scale 1½"=1'-0"

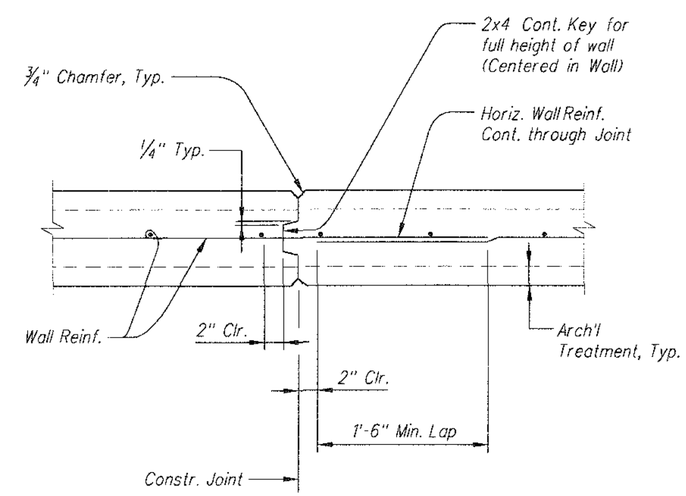

CONSTRUCTION JOINT DETAIL (4)

Scale 1½"=1'-0"

Date: 08\20\09

File: C:\PWworking\PHX\dms42758\20S-B50.dgn

No.	Revision Description	Engineer	Date

		Date
Designed	ERM, SST	8/09
Drawn	YRK	8/09
Checked	TWB	8/09
Proj. Engr.	TWB	8/09

Priscilla S. Cornelio, P.E. Director

Registered Professional Engineer (Civil) CERTIFICATE NO. 29368 TED W. BUELL Date Signed ARIZONA U.S.A.

Expires 09-30-2010

HDR Engineering, Inc. 5210 East Williams Circle, Suite 530 Tucson, AZ 85711-4459 (520) 394-3600

CONCRETE PARAPET DETAILS
LA CHOLLA BOULEVARD BRIDGE
RUTHRAUFF RD. TO RIVER RD.
PROJECT NO. 4LCITR

Pima County Department of Transportation

Scales	Horiz. 1"= Vert. N/A	Sheet S50 of S58	Page 287 of 356

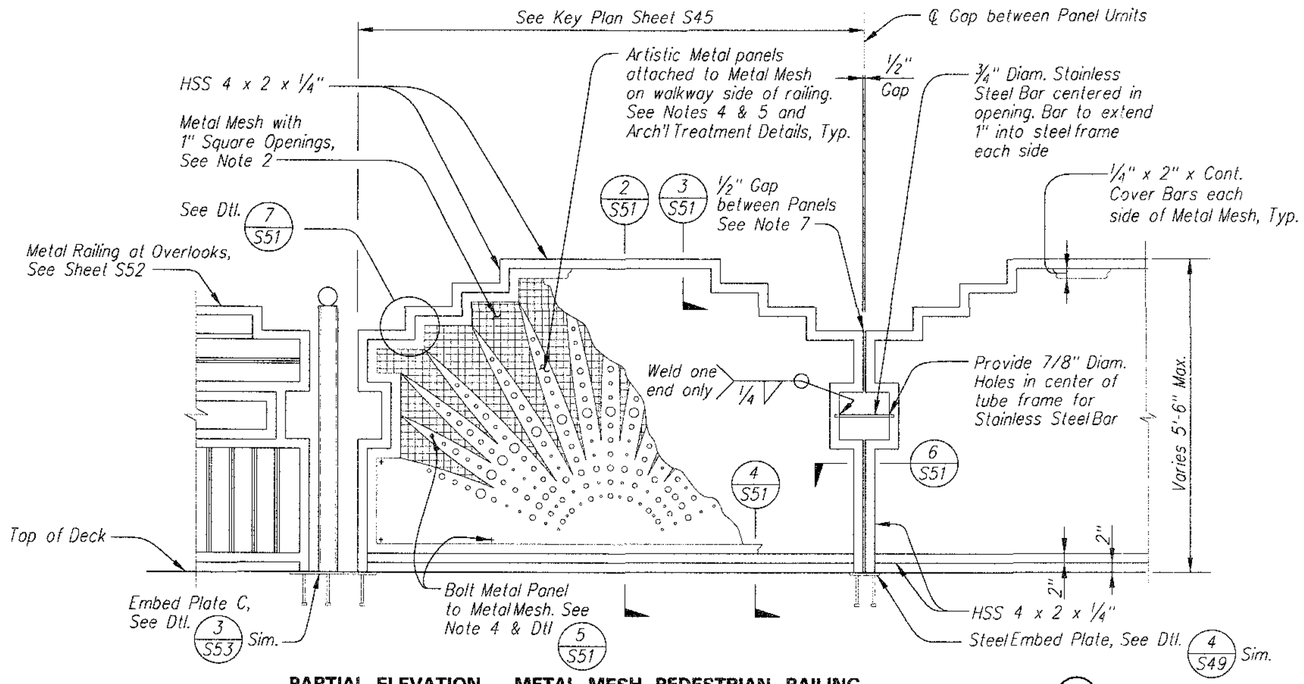

PARTIAL ELEVATION - METAL MESH PEDESTRIAN RAILING (1)

Scale 3/4"=1'-0"

Notes:

1. See Notes on S48.
2. Metal Mesh shall be pre-glavanized steel wire with 1" square openings, intermediate crimp weave with 0.135" minimum wire diameter. Open Area = 77.6%, Weight = 1.04 lbs/sq. ft.
3. See Architectural treatment details on Sheets S54 - S58 for artistic details, etc.
4. Artistic metal panels shall be fabricated by the Contractor and shall be water jet cut or laser cut.
5. Artistic metal panels shall be attached to the metal mesh with bolts at all corners and through narrow or isolated sections of the graphics as necessary to adequately attach the panels to each mesh. The maximum bolt spacing shall be 2'-0" o.c. in any direction. Bolts, buts and washers shall be painted to match the color of the artistic metal panels.
6. At the Contractor's option, and at no additional cost, the cover bars on the pedestrian side of the railing and the artistic metal panels may be cut from the same piece of 3/8" thick steel such that the edges of the artistic panel including the tips of the agave leaves are connected to the cover bars.
7. Railing units shall be fabricated to accomodate the vertical curve of the bridge deck such that posts are installed vertical and the gap between end posts of each panel unit is maintained at 1/2".
8. Metal rails, posts, embed plates, and artistic metal panels shall be painted in accordance with the Special Provisions.
9. Contractor shall submit shop drawings and a mockup panel for review and approval prior to fabrication.

DETAIL (5)

Scale 3"=1'-0"

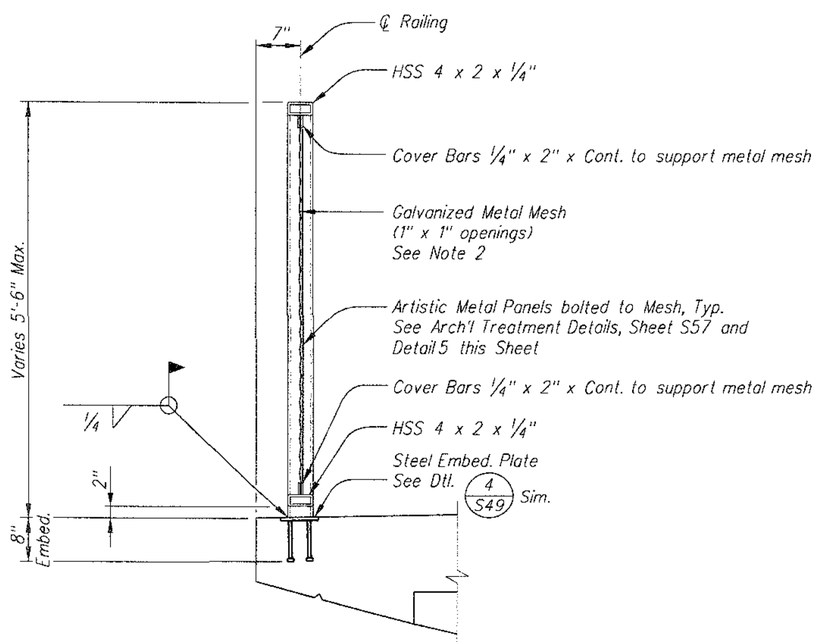

DETAIL - METAL MESH RAILING (2)

Scale 1"=1'-0"

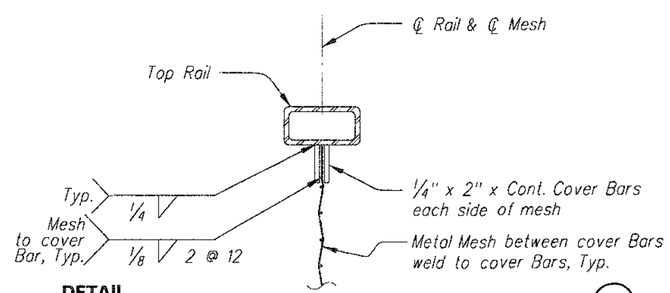

DETAIL (3)

Scale 3"=1'-0"

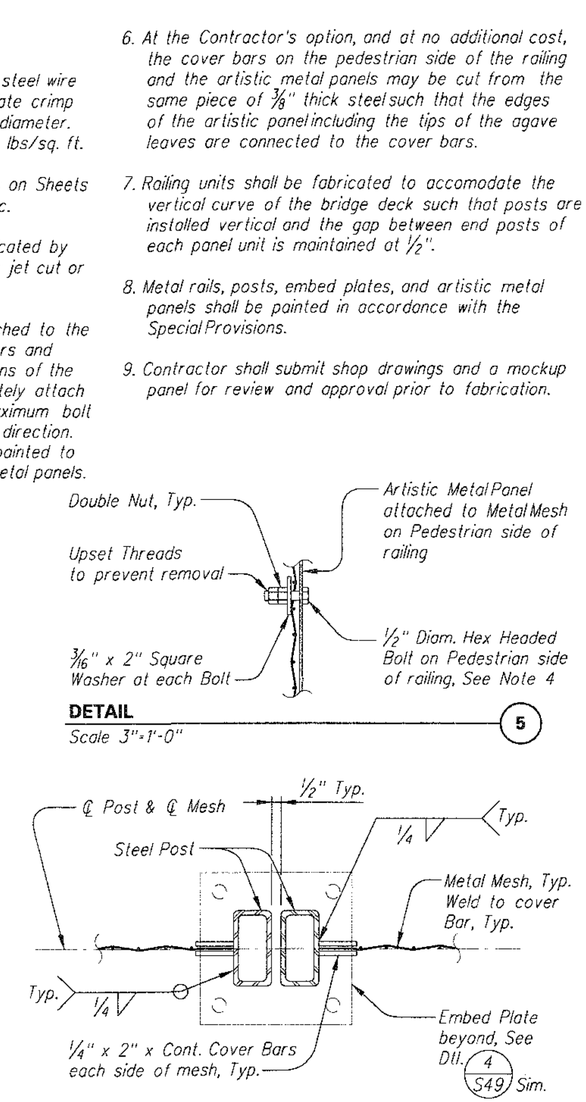

DETAIL (6)

Scale 3"=1'-0"

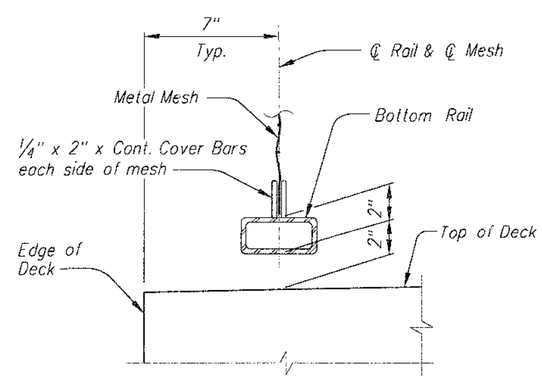

DETAIL (4)

Scale 3"=1'-0"

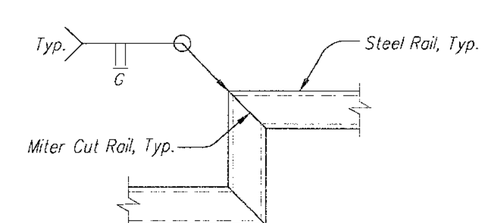

DETAIL (7)

Scale 3"=1'-0"

Scales	Horiz. 1"= / Vert. N/A	Sheet S51 of S58	Page 288 of 356

Pima County Department of Transportation

Priscilla S. Cornelio, P.E. Director

No.	Revision Description	Engineer	Date

			Date
Designed	FRM, SST		8/09
Drawn	TRK		8/09
Checked	TWB		8/09
Proj. Engr.	TWB		8/09

Registered Professional Engineer (Civil) Certificate No. 29368 TED W. BUELL Date Signed Arizona U.S.A.

Expires 09-30-2010

HDR Engineering, Inc. 5210 East Williams Circle, Suite 530 Tucson, AZ 85711-4459 (520) 584-3600

METAL MESH RAILING DETAILS
LA CHOLLA BOULEVARD BRIDGE
RUTHRAUFF RD. TO RIVER RD.
PROJECT NO. 4LCITR

Date: 08\20\09

File: C:\PWworking\PHX\dms42758\20S-B51.dgn

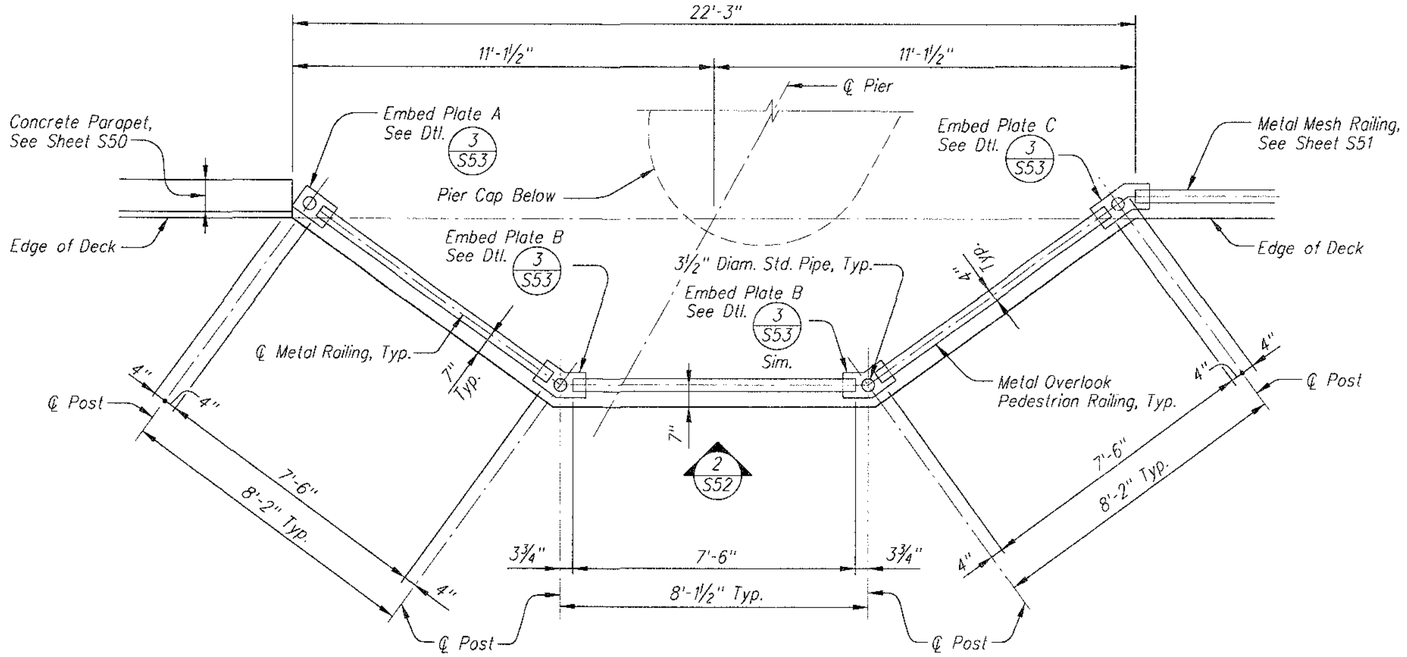

PLAN – METAL RAILING AT OVERLOOKS (1)

Scale 1/2"=1'-0"

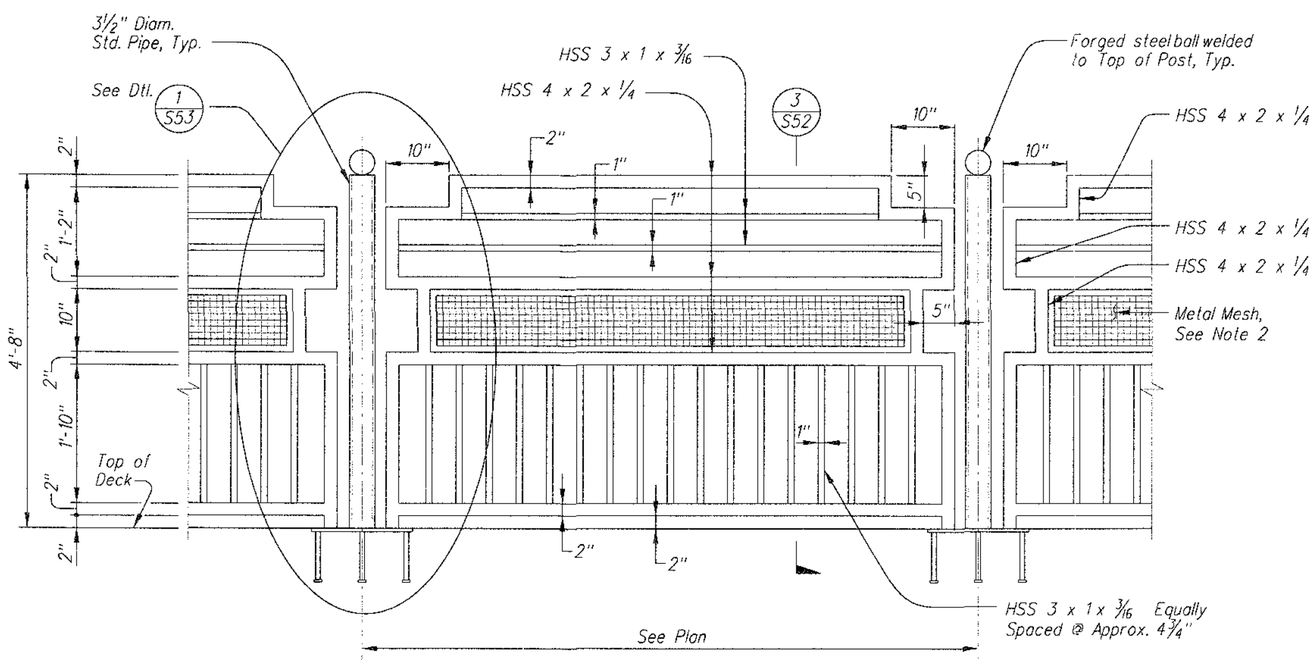

PARTIAL ELEVATION – METAL RAILING AT OVERLOOKS (2)

Scale 1"=1'-0"

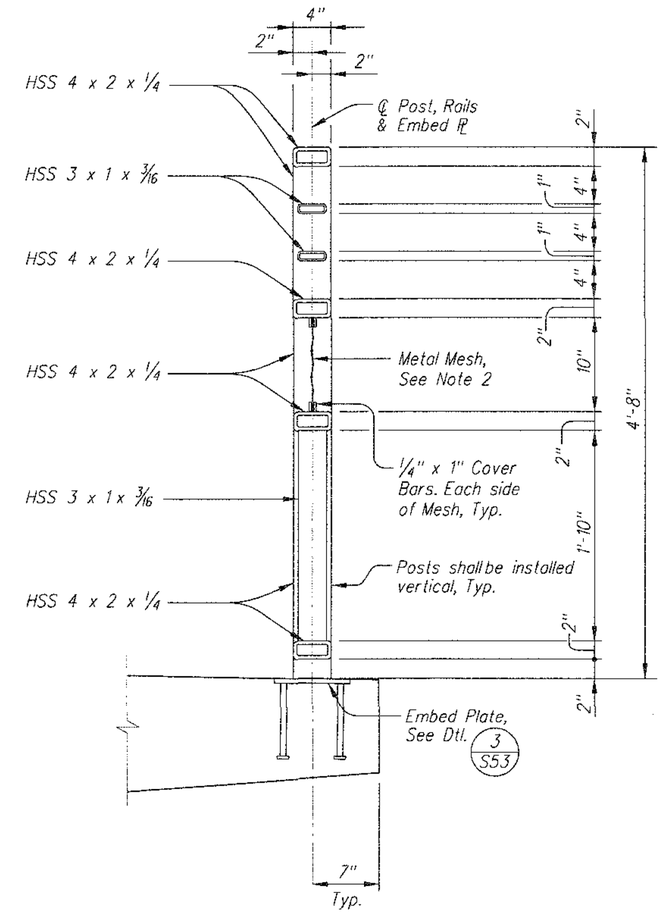

SECTION – METAL RAILING AT OVERLOOKS (3)

Scale 1 1/2"=1'-0"

Notes:

1. See notes on Sheet S48.
2. Metal mesh shall be pre-galvanized steel wire with 1" square openings, intermediate crimp weave with 0.135" minimum wire diameter. Open Area = 77.6%, Weight = 1.04 lbs/sq. ft.
3. See Architectural treatment details on Sheets S54 - S58 for artistic details, etc.
4. Posts shall be installed vertical.
5. Metal rails, posts, embed plates, forged steel balls shall be painted in accordance with the Special Provisions.
6. Contractor shall submit shop drawings and a mockup panel for review and approval prior to fabrication.

No.	Revision Description	Engineer	Date

Priscilla S. Cornelio, P.E. Director

		Date
Designed	ERM, SST	8/09
Drawn	TRK	8/09
Checked	TWB	8/09
Proj. Engr.	TWB	8/09

Registered Professional Engineer (Civil) Certificate No. 29368 TED W. BUSLL Date Signed Arizona U.S.A.

Expires 09-30-2010

HDR Engineering, Inc. 5210 East Williams Circle, Suite 530 Tucson, AZ 85711-4459 (520) 584-3600

Pima County Department of Transportation

METAL RAILING AT OVERLOOKS
LA CHOLLA BOULEVARD BRIDGE
RUTHRAUFF RD. TO RIVER RD.
PROJECT NO. 4LCTR

Scales	Horiz. 1"= Verl. N/A	Sheet S52 of S58	Page 289 of 356

Date: 08\20\09

File: C:\PWworking\PHX\dms42758\20S-B52.dgn

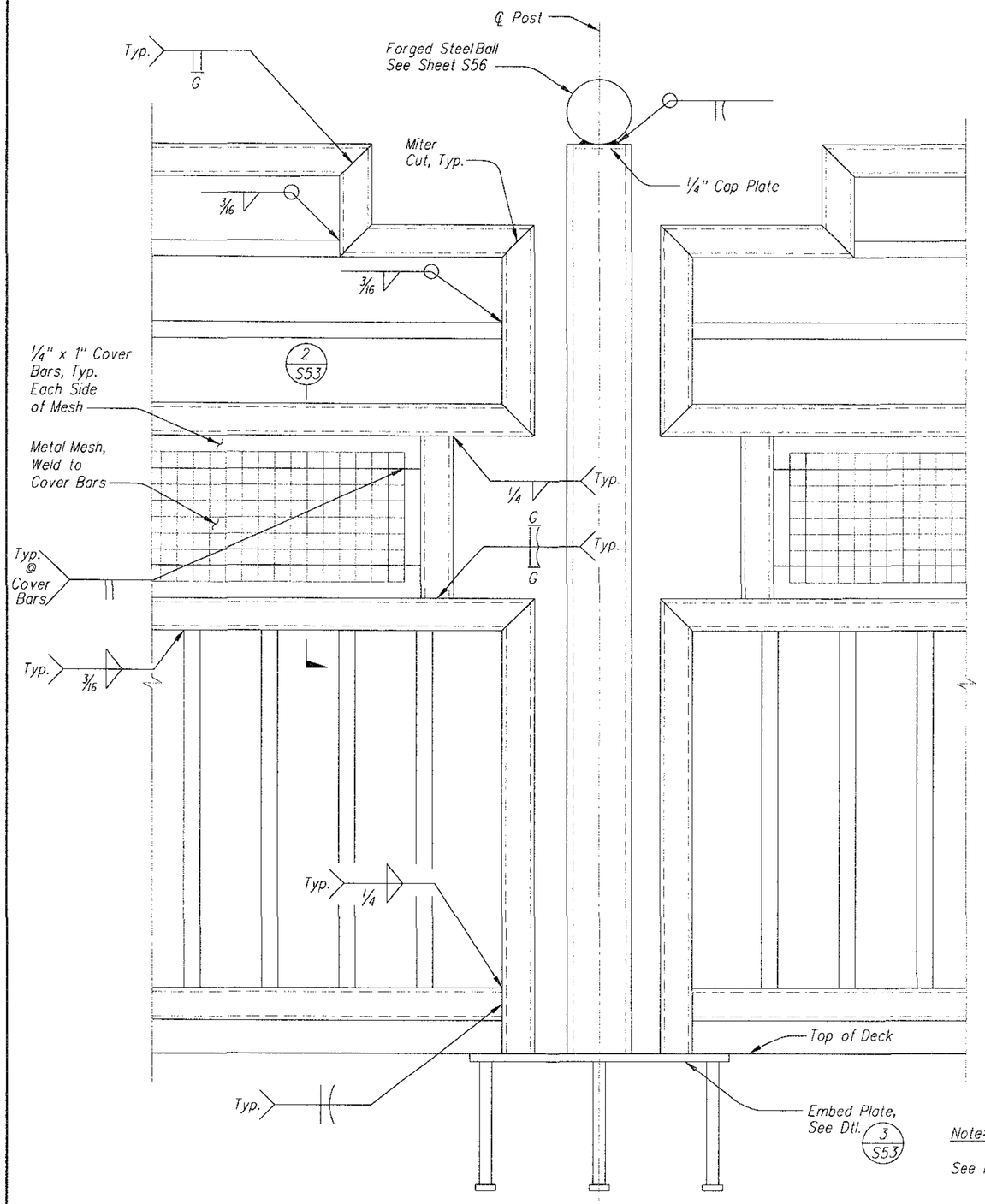

DETAIL – METAL OVERLOOK PEDESTRIAN RAILING (1)

Scale 3"=1'-0"

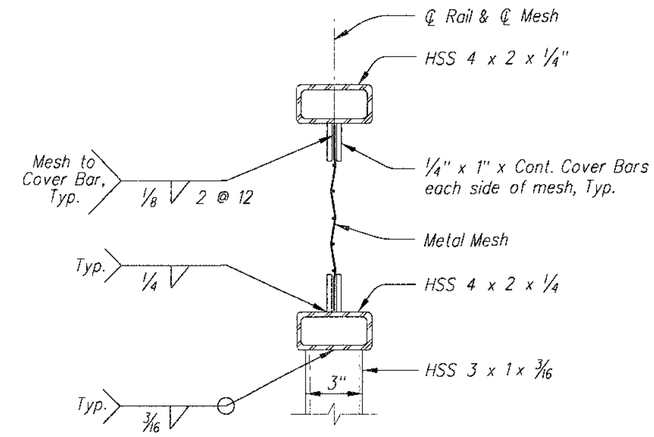

DETAIL (2)

Scale 3"=1'-0"

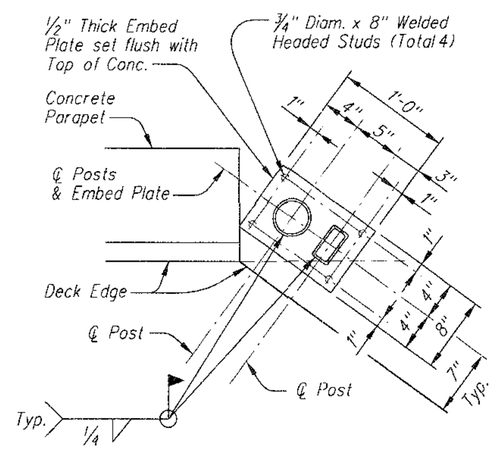

EMBED PLATE A

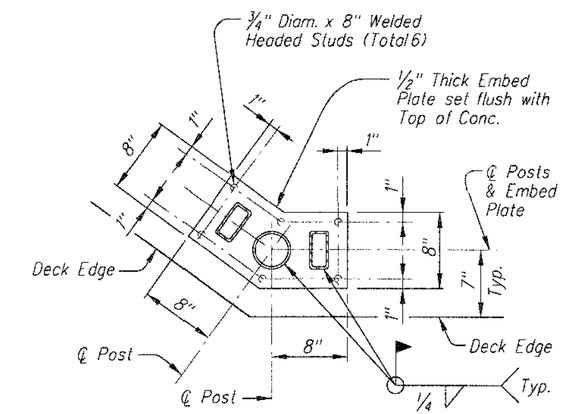

EMBED PLATE B

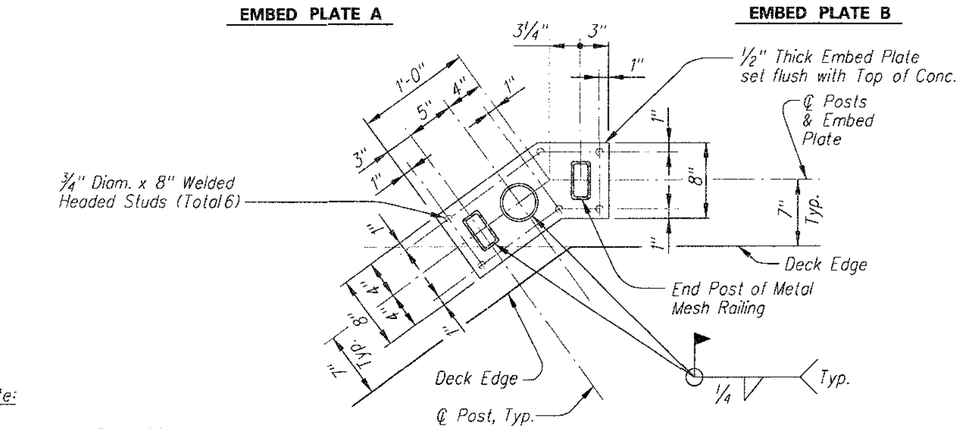

EMBED PLATE C

EMBED PLATE DETAIL (3)

Scale 1 1/2"=1'-0"

Note:

See Notes on Sheet S52.

Date: 08\20\09

File: C:\PWworking\PHX\dms42758\20S-B53.dgn

Scales	Horiz. 1"= / Vert. N/A	Sheet S53 of S58	Page 290 of 356

Pima County Department of Transportation

Priscilla S. Cornelio, P.E. Director

No.	Revision Description	Engineer	Date

		Date
Designed	ERM, SST	8/09
Drawn	TRK	8/09
Checked	TWB	8/09
Proj. Engr.	TWB	8/09

Registered Professional Engineer (Civil) CERTIFICATE NO. 29368 TED W. BUELL Date Signed ARIZONA U.S.A.

Expires 09-30-2010

HDR Engineering, Inc.
5210 East Williams Circle, Suite 530
Tucson, AZ 85711-4459
(520) 394-3600

METAL RAILING AT OVERLOOKS
LA CHOLLA BOULEVARD BRIDGE
RUTHRAUFF RD. TO RIVER RD.
PROJECT NO. 4LCITR

GENERAL NOTES:

1. USE MDO OR HDO OVERLAY BOARD FOR ALL ARCHITECTURAL FORMING THAT IS NOT INCLUDED IN AN ELASTOMERIC FORM LINER PATTERN UNIT.
2. MOCK-UPS ARE REQUIRED FOR EACH UNIQUE PATTERN UNIT.
3. FENCING MOCK-UPS, WHEN APPROVED, MAY BE INCORPORATED IN THE FINISHED WORK.
4. CONCRETE PANEL MOCK-UPS SHALL NOT BE USED IN THE FINISHED WORK.
5. APPROVED MOCK-UPS MUST BE KEPT ON SITE AND WILL BE USED AS THE PERFORMANCE SPEC FOR THE WORK.
6. SEE SHEETS S45 THROUGH S53 FOR STRUCTURAL DETAILS
7. SEE SPECIAL PROVISIONS FOR FORMLINER AND PAINTING REQUIREMENTS.
8. CONTRACTOR SHALL VERIFY DIMENSIONS PRIOR TO FABRICATION.

VICKI SCURI SITEWORKS

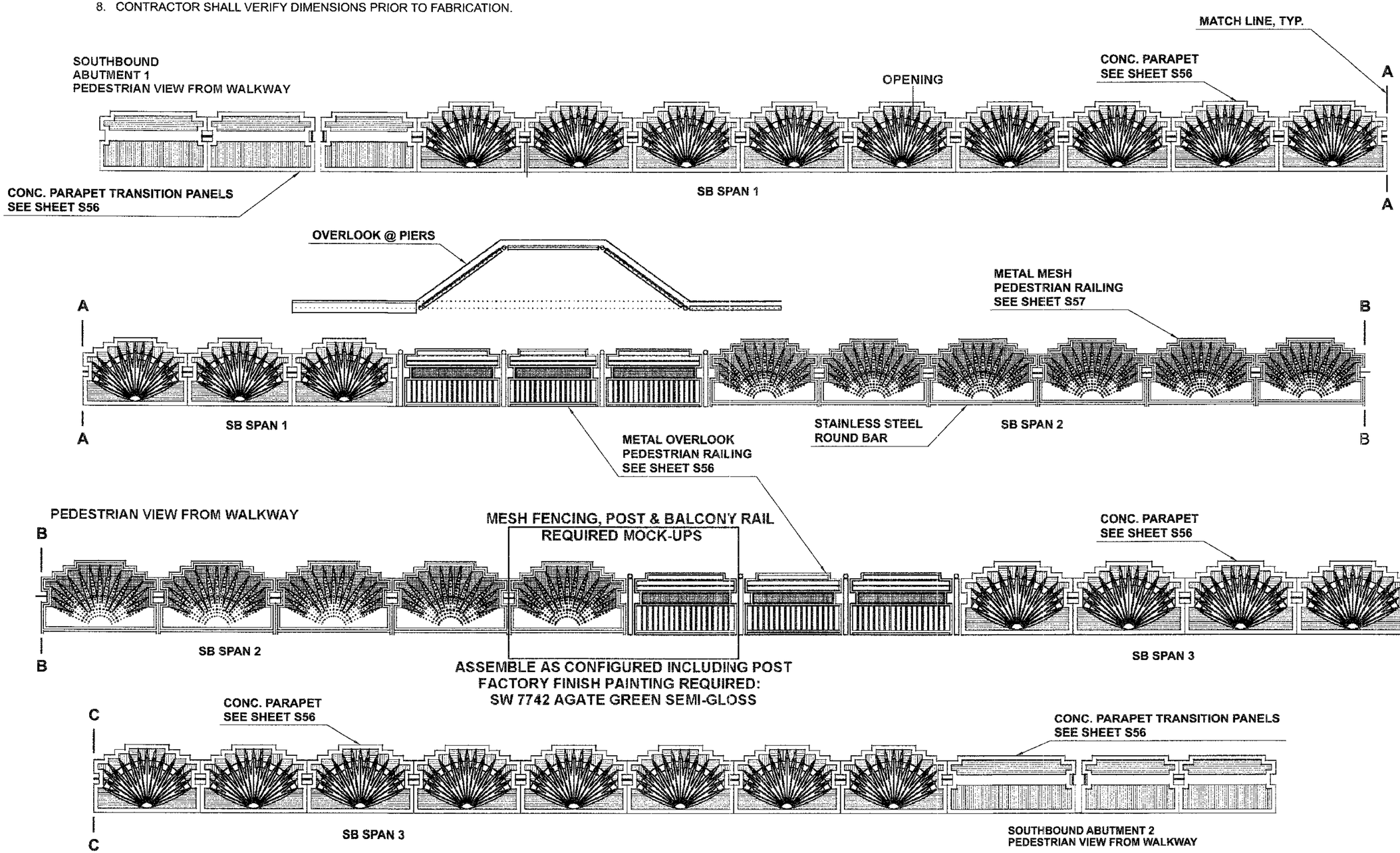

No.	Revision Description	Engineer	Date

		Date
Designed	VS	8/09
Drawn	JA	8/09
Checked	TWB	8/09
Proj. Engr.	TWB	8/09

Priscilla S. Cornelio, P.E. Director

Registered Professional Engineer (Civil) CERTIFICATE NO. 29368 TED W. BUELL Date Signed ARIZONA U.S.A.

Expires 09-30-2010

HDR Engineering, Inc.
5210 East Williams Circle, Suite 530
Tucson, AZ 85711-4459
(520) 394-3600

Pima County Department of Transportation

ARCHITECTURAL TREATMENT DETAILS
LA CHOLLA BOULEVARD BRIDGE
RUTHRAUFF RD. TO RIVER RD.
PROJECT NO. 4LCITR

Scales	Horiz. 1"=	Sheet	S54 of S58	Page 291	of 356
	Vert. N/A				

Date: 08\20\09

File: C:\PWworking\PHX\dms42758\205-B54.dgn

SEE GENERAL NOTES ON SHEET S54

VICKI SCURI SITEWORKS

NORTHBOUND ABUTMENT 2
PEDESTRIAN VIEW FROM WALKWAY

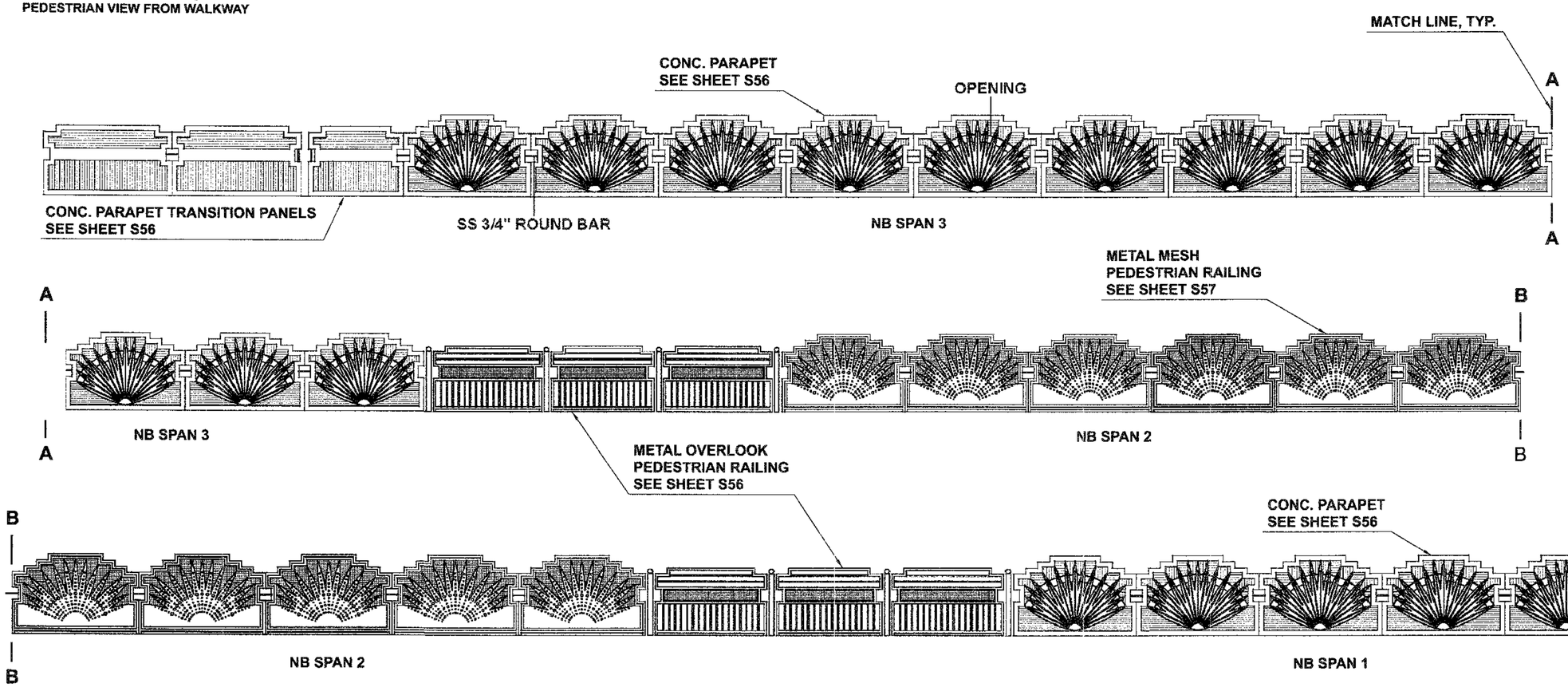

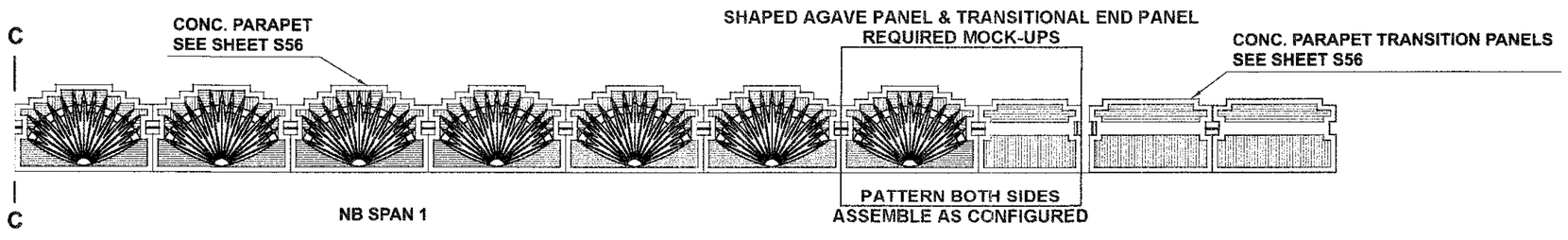

NORTHBOUND ABUTMENT 1
PEDESTRIAN VIEW FROM WALKWAY

Pima County Department of Transportation

Priscilla S. Cornelio, P.E. Director

No.	Revision Description	Engineer	Date

		Date
Designed	VS	8/09
Drawn	JA	8/09
Checked	TWB	8/09
Proj. Engr.	TWB	8/09

Registered Professional Engineer (Civil) CERTIFICATE NO. 29368 TED W. BUELL Date Signed ARIZONA U.S.A.

Expires 09-30-2010

HDR Engineering, Inc.
5210 East Williams Circle, Suite 530
Tucson, AZ 85711-4459
(520) 584-3600

ARCHITECTURAL TREATMENT DETAILS
LA CHOLLA BOULEVARD BRIDGE
RUTHRAUFF RD. TO RIVER RD.
PROJECT NO. 4LCITR

Scales	Horiz. 1"=	Sheet	S55 of S58	Page 292 of 356
	Vert. N/A			

Date: 08\20\09

File: C:\PWworking\PHX\dms42758\20S-B55.dgn

VICKI SCURI SITEWORKS

TYPICAL PATTERN LAYOUT
AGAVE WALL
NOM DIM

TYPICAL PATTERN RELIEF
FOR AGAVE PATTERN
FRONT & BACK

TYPICAL PATTERN RELIEF
FOR AGAVE PATTERN

OPEN
WINDOW

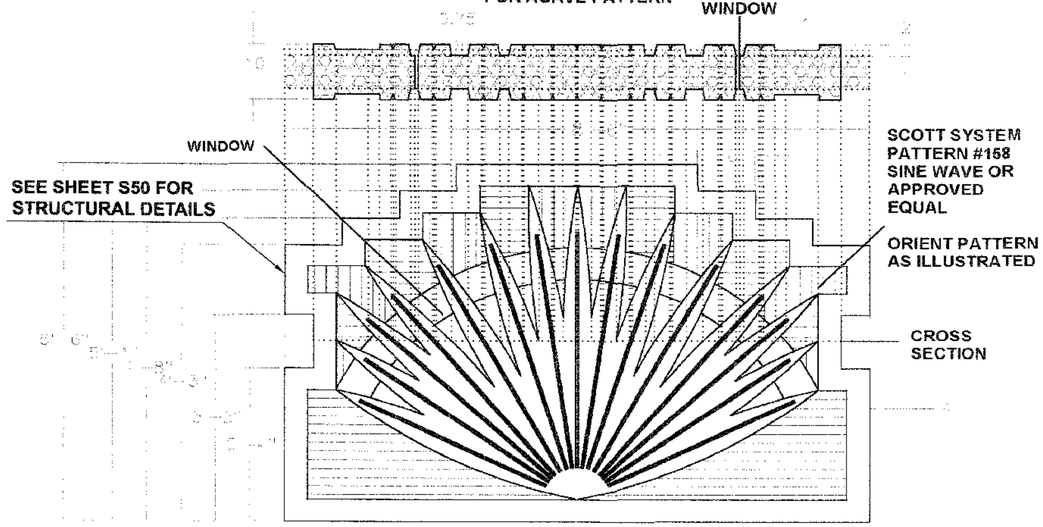

GENERAL NOTES:
•AGAVE PATTERN PANEL IS CNC CAM CUT. CUTTING TECHNIQUES AND AESTHETICS ARE TO BE DETERMINED IN COLLABORATION WITH THE ARTIST DURING FABRICATION.
•ALL ARCHITECURAL FORMING SHALL BE INCLUDED IN THE PATTERN PANEL OR CREATED WITH MDO OR HDO OVERLAY BOARD TO PROVIDE A SMOOTH, CRISP, CLEAN FINISH.
•PROVIDE 10 DEGREE DRAFT FOR RECESSES

TRANSITIONAL PANEL

NOTE: TRANSITIONAL PANEL
LENGTHS VARY WITH LOCATION.
CONSULT ENGINEERING DRAWINGS
FOR EXACT DIMENSIONS.

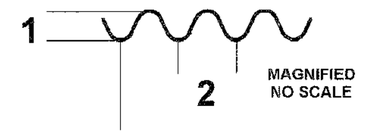

SCOTT SYSTEM PATTERN 158
OR APPROVED EQUAL SINE WAVE

SEE SHEET S50 FOR
STRUCTURAL DETAILS

ORIENT PATTERN AS ILLUSTRATED
PLACE IN 2" DEEP RECESS

CROSS
SECTION

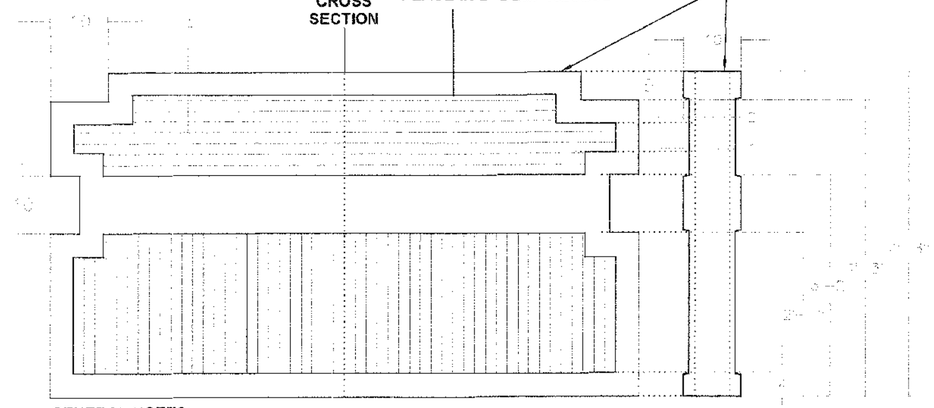

GENERAL NOTES:
•ALL ARCHITECTURAL FORMING SHALL BE INCLUDED IN THE FORM LINER OR CREATED WITH MDO OR HDO OVERLAY BOARD TO PROVIDE A SMOOTH, CRISP, CLEAN FINISH.
•PROVIDE 10 DEGREE DRAFT FOR ALL FORM LINERS

TYPICAL PATTERN LAYOUT
AGAVE WALL
NOM DIM

PATTERN CONSTRUCTION

OPEN

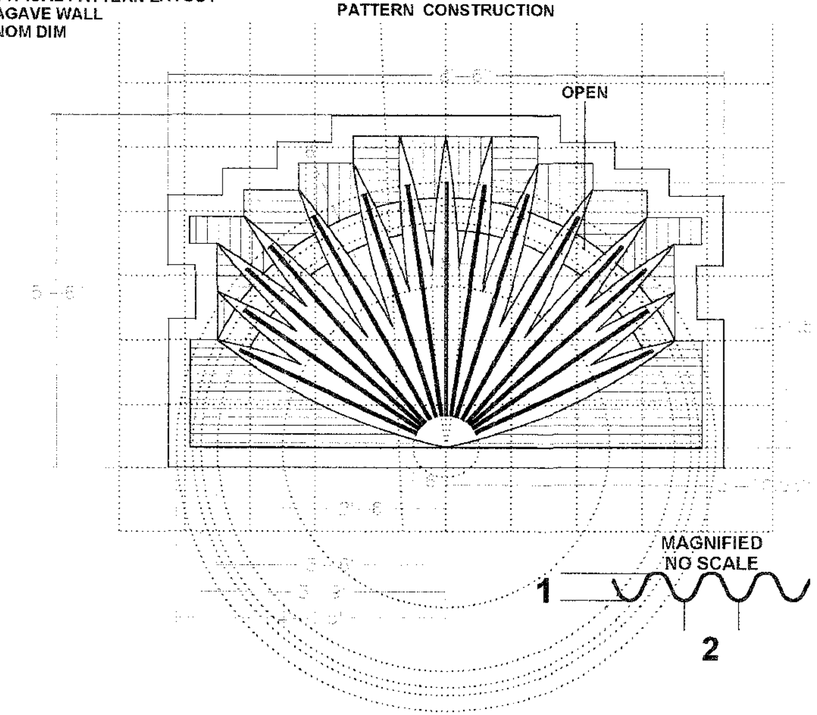

TYPICAL BALCONY RAILING
NOM DIM

2"X4" TUBULAR STEEL FRAME

4" DIAMETER
FORGED STEEL
SPHERE

1"X3" TUBULAR STEEL

SEE SHEET S52 FOR
STRUCTURAL DETAILS

SEE SHEET S52

SEE SHEET S52

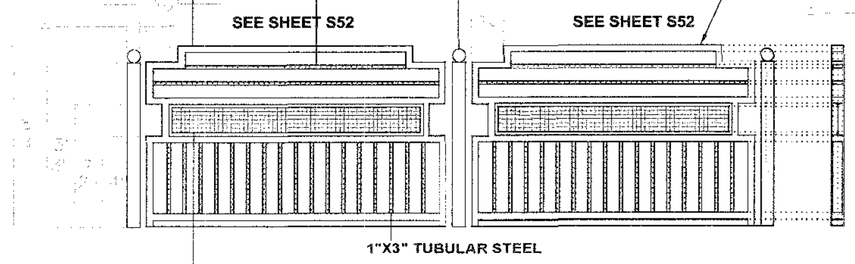

1"X3" TUBULAR STEEL

NOTE:

ALL MESH IS PREGALVANIZED.

1/4" THICK STEEL PLATE FRAME SANDWICH FOR MESH
10 GAUGE 1.0" CLEAR SQUARE CRIMPED WOVEN WIRE MESH, PRE-GALVANIZED

COLOR: SHERWIN WILLIAMS: SW 7742 AGATE GREEN SEMI-GLOSS FACTORY FINISH

FORGED STEEL SPHERE SHALL BE 3 15/16" DIAMETER BY 8.47 LBS WITH ROUGH TEXTURE, MANUFACTURED BY KING ARCHITECTURAL METALS, ITEM 13-113-11 OR APPROVED EQUIVALENT.

SEE GENERAL NOTES ON SHEET S54

NOTE:

ALL FORMLINERS SHALL HAVE A 10° DRAFT.

Scales	Horiz. 1"= / Vert. N/A	Sheet S56 of S58	Page 293 of 356

Date: 08\20\09

File: C:\PWworking\PHX\dms42758\20S-B56.dgn

No.	Revision Description	Engineer	Date

			Date
Designed	VS		8/09
Drawn	JA		8/09
Checked	TWB		8/09
Proj. Engr.	TWB		8/09

Priscilla S. Cornelio, P.E. Director

Registered Professional Engineer (Civil)
CERTIFICATE NO. 29368
TED W. BUELL
ARIZONA U.S.A.
Expires 09-30-2010

HDR Engineering, Inc.
5210 East Williams Circle, Suite 530
Tucson, AZ 85711-4459
(520) 394-3600

Pima County Department of Transportation

ARCHITECTURAL TREATMENT DETAILS
LA CHOLLA BOULEVARD BRIDGE
RUTHRAUFF RD. TO RIVER RD.
PROJECT NO. 4LCITR

MESH SCREEN TYPICAL
NOTE: SB & NB ARE DIFFERENT WIDTHS

COLOR: SHERWIN WILLIAMS 7742 AGATE GREEN
SEMI-GLOSS FACTORY FINISH

OUTER FRAME IS 2"X4" TUBULAR STEEL
FLAT BAR IS 1/4" THICK STEEL
AGAVE IS 3/8" STEEL PLATE

1.0" CLEAR, CRIMPED WOVEN WIRE
PRE-GALVANIZED MESH
10 GAUGE
ORIENT AS ILLUSTRATED

ELEVATION

SOUTHBOUND

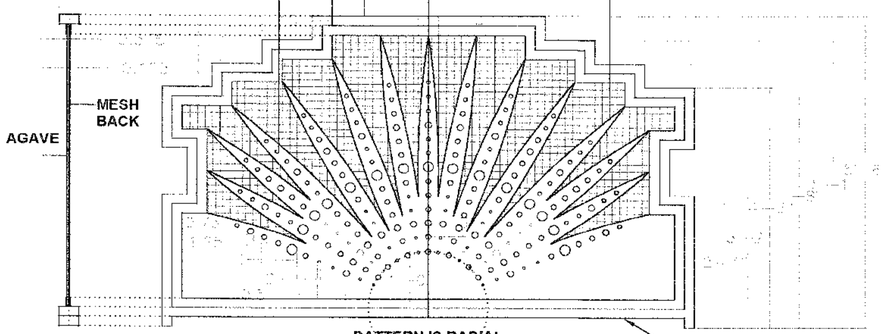

PATTERN IS RADIAL

NOM DIM
CROSS
SECTION

GENERAL NOTES:

•AGAVE PATTERN PANEL IS CAM CUT: WATER JET CUT OR LASER CUT.
•DO NOT ALLOW PATTERN UNIT TO WARP
•PATTERN MUST BE STRAIGHT AND TRUE
•EDGES MUST BE SMOOTH AND CLEAN, SAFE TO TOUCH

SEE SHEET S51 FOR
STRUCTURAL DETAILS

MESH SCREEN TYPICAL
NOTE: SB & NB
ARE DIFFERENT WIDTHS

MIRROR

WIDTH VARIABLE

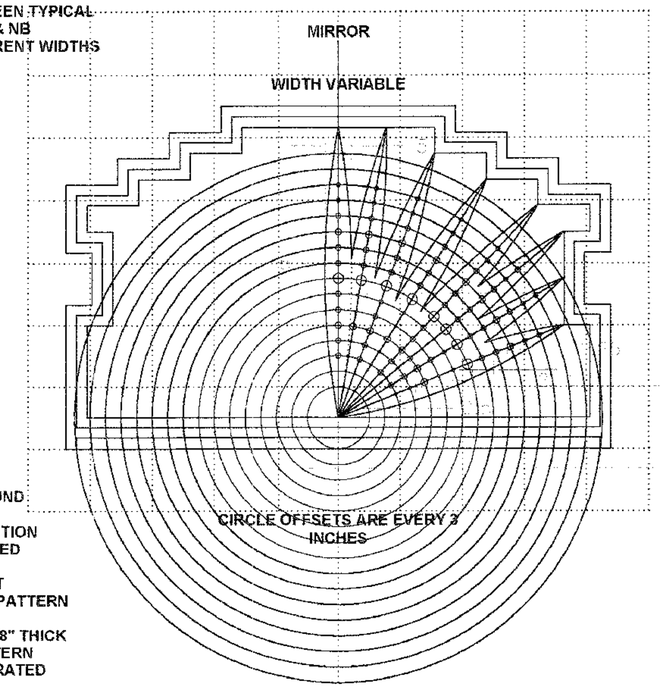

NORTHBOUND
PATTERN
CONSTRUCTION
ILLUSTRATED

CIRCLE OFFSETS ARE EVERY 3
INCHES

TRIM TO FIT
& MIRROR PATTERN
PART
STEEL IS 3/8" THICK
HOLE PATTERN
AS ILLUSTRATED

MESH SCREEN TYPICAL
NOTE: SB & NB
ARE DIFFERENT WIDTHS

GENERAL NOTES:

•AGAVE PATTERN PANEL IS CAM CUT: WATER JET CUT OR LASER CUT.
•DO NOT ALLOW PATTERN UNIT TO WARP
•PATTERN MUST BE STRAIGHT AND TRUE
•EDGES MUST BE SMOOTH AND CLEAN, SAFE TO TOUCH

SEE STRUCTURAL DETAILS

ELEVATION

NORTHBOUND

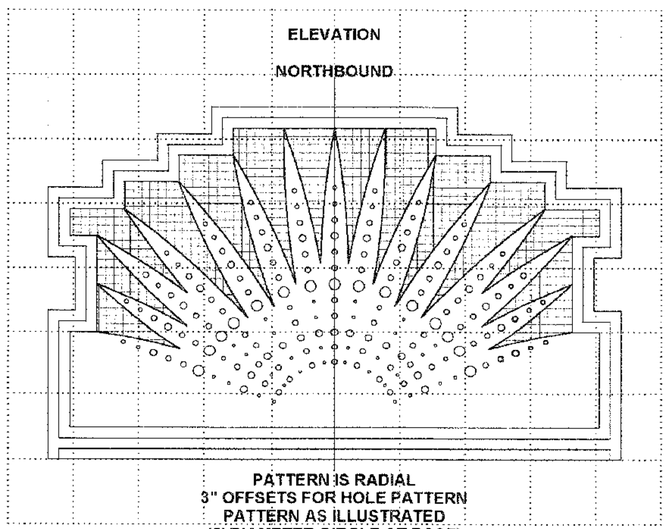

PATTERN IS RADIAL
3" OFFSETS FOR HOLE PATTERN
PATTERN AS ILLUSTRATED
(2' DIAMETER CIRCLE AT BASE)

NOTE:

ALL FORMLINERS SHALL HAVE A 10° DRAFT.

SEE GENERAL NOTES ON SHEET S54

No.	Revision Description	Engineer	Date

		Date
Designed	VS	8/09
Drawn	JA	8/09
Checked	TWB	8/09
Proj. Engr.	TWB	8/09

Priscilla S. Cornelio, P.E. Director

Registered Professional Engineer (Structural)
CERTIFICATE NO. 29368
TED W. BUELL
Date Signed
ARIZONA U.S.A.
Expires 09-30-2010

HDR Engineering, Inc.
5210 East Williams Circle, Suite 530
Tucson, AZ 85711-4459
(520) 394-3600

Pima County Department of Transportation

ARCHITECTURAL TREATMENT DETAILS
LA CHOLLA BOULEVARD BRIDGE
RUTHRAUFF RD. TO RIVER RD.
PROJECT NO. 4LCITR

Scales	Horiz. 1"= Vert. N/A	Sheet S57 of S58	Page 294 of 356

Date: 08\20\09

File: C:\PWworking\PHX\dms42758\205-B57.dgn

TYPICAL COLUMN LAYOUT
NOM DIM: 5' DIAMETER COLUMN
HEIGHT VARIES

COLUMN CIRCUMFERENCE: 15'-8.5"
HEIGHT VARIES
RUN PATTERN TO BOTTOM OF COLUMN

DEVELOPED ELEVATION OF COLUMN
CENTERLINER OF PIER

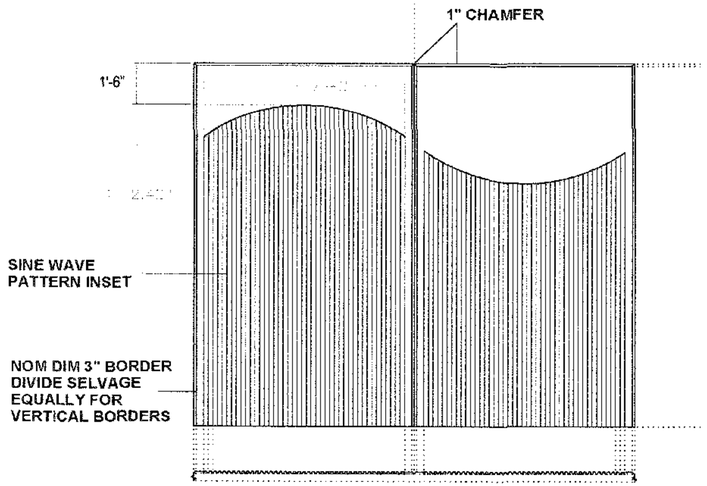

CROSS SECTION

CENTER SINE WAVE PATTERN INTO
1" RECESS AS ILLUSTRATED
PROVIDE 10 DEGREE DRAFT ON RECESS

SINE WAVE
SCOTT SYSTEM PATTERN
#158 OR EQUAL

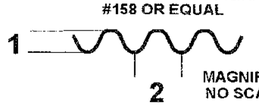

MAGNIFIED
NO SCALE

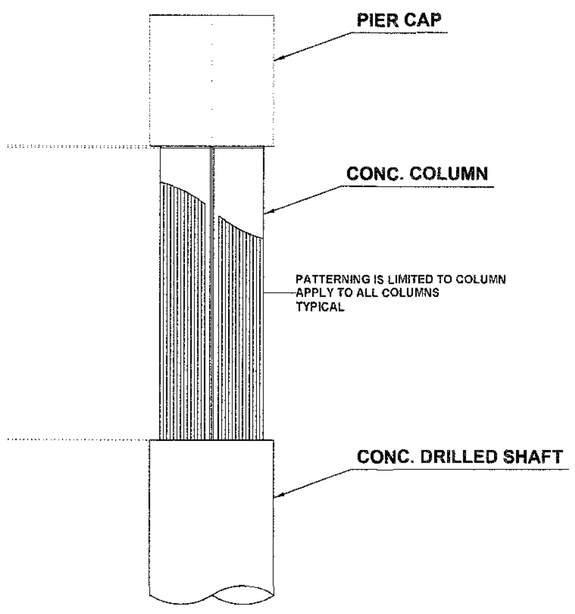

VICKI SCURI SITEWORKS

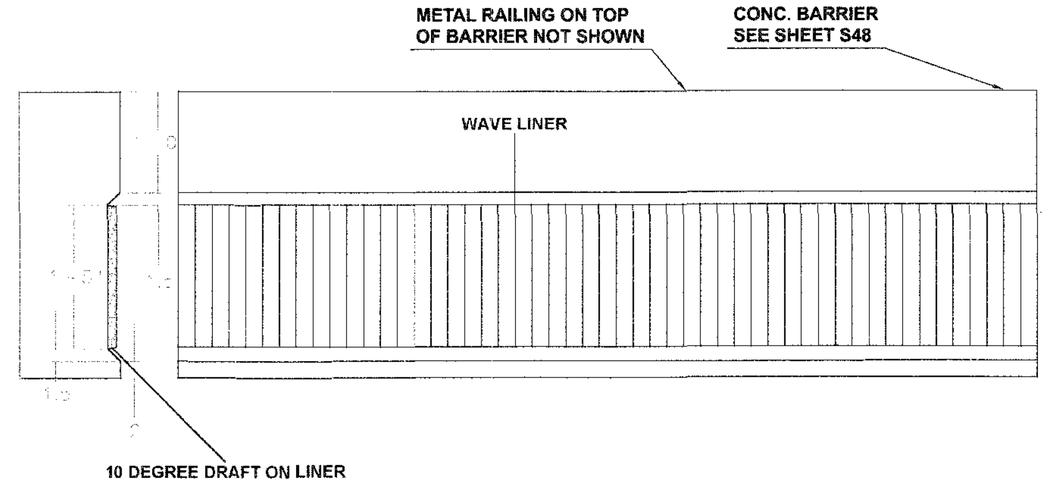

NOTE:

USE MDO OR HDO FORMING ARCHITECTURAL SURFACES.
PROVIDE A CLEAN, CRISP, SMOOTH FINISH.

TYPICAL COLUMN RUSTICATION

STANDARD FORMLINER
SCOTT SYSTEM 158
OR APPROVED EQUAL

STANDARD FORMLINER
SCOTT SYSTEM 158
OR APPROVED EQUAL

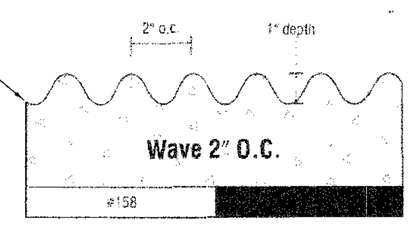

SECTION

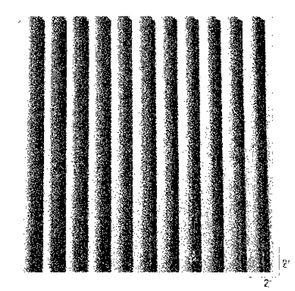

ELEVATION

NOTE:

ALL FORMLINERS SHALL HAVE A 10° DRAFT.

SEE GENERAL NOTES ON SHEET S54

Scales	Horiz. 1"= / Vert. N/A	Sheet S58 of S58	Page 295 of 356

Pima County Department of Transportation

Priscilla S. Cornelio, P.E. Director

No.	Revision Description	Engineer	Date

		Date
Designed	VS	8/09
Drawn	JA	8/09
Checked	TWB	8/09
Proj. Engr.	TWB	8/09

Registered Professional Engineer (Civil)
CERTIFICATE NO. 29368
TED W. BUELL
Date Signed
ARIZONA U.S.A.
Expires 09-30-2010

HDR Engineering, Inc.
5210 East Williams Circle, Suite 530
Tucson, AZ 85711-4459
(520) 584-3600

ARCHITECTURAL TREATMENT DETAILS
LA CHOLLA BOULEVARD BRIDGE
RUTHRAUFF RD. TO RIVER RD.
PROJECT NO. 4LCITR

Date: 08\20\09

File: C:\PWworking\PHX\dms42758\20S-B58.dgn

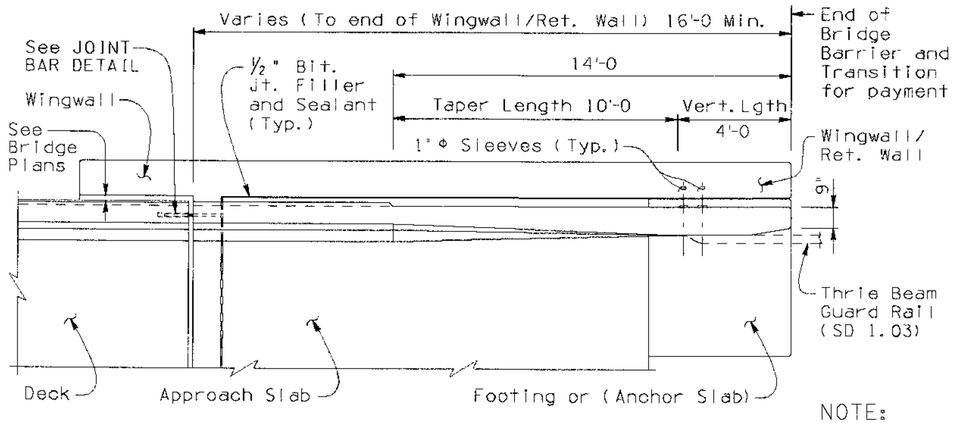

PLAN

NOTE:
The 32 inch barrier height is measured from the top of the (future) wearing surface (2 inch allowance).

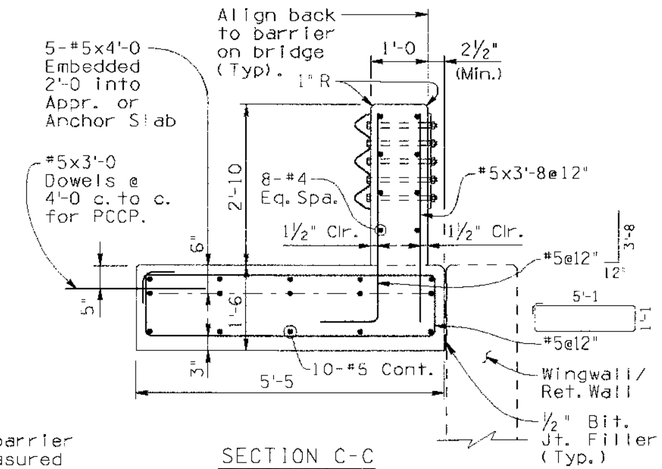

SECTION C-C

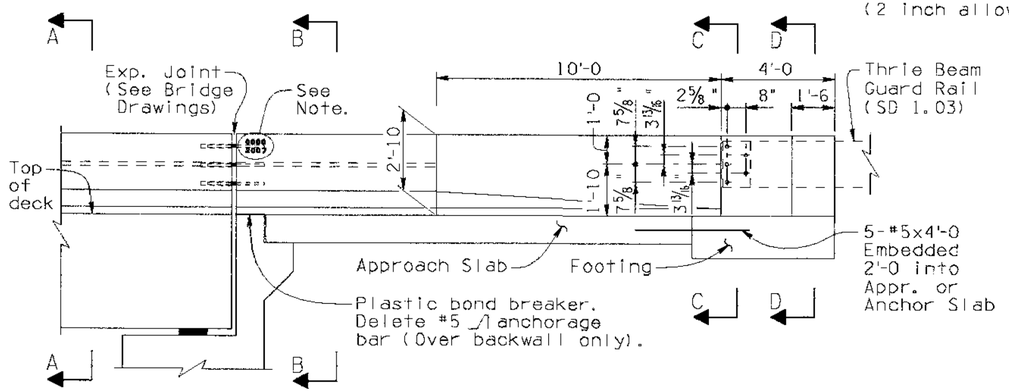

ELEVATION

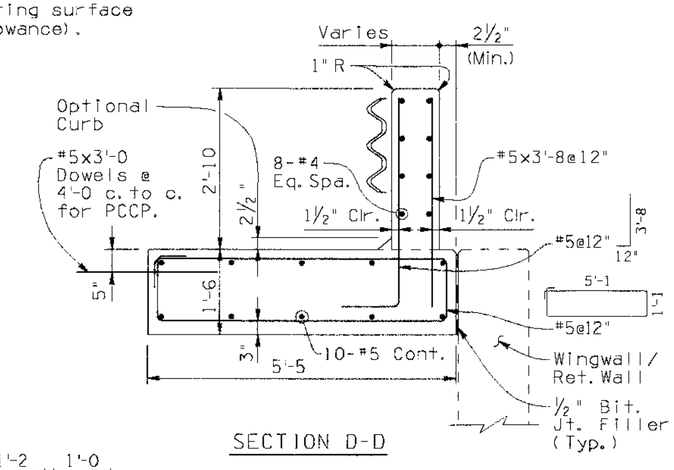

SECTION D-D

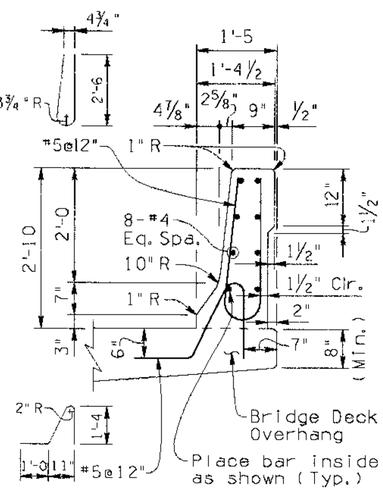

SECTION A-A

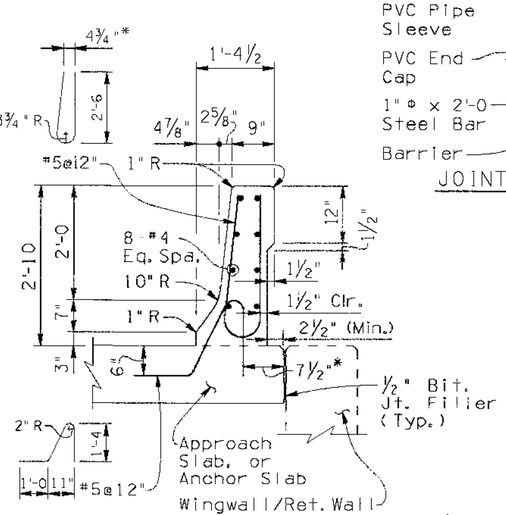

SECTION B-B

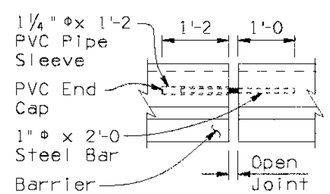

JOINT BAR DETAIL

*Varies at taper length

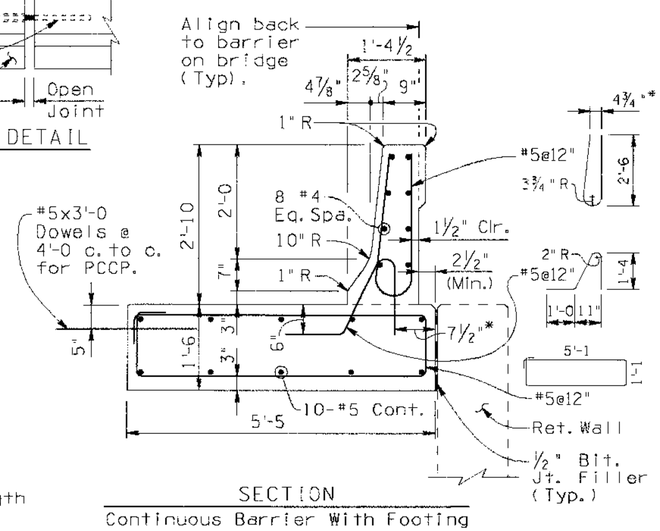

SECTION
Continuous Barrier With Footing

GENERAL NOTES:

Construction Specification - Arizona Department of Transportation Standard Specifications for Road and Bridge Construction, latest Edition.

Design Specifications - AASHTO LRFD Bridge Design Specifications, 4th Edition 2007.

This barrier has been successfully crash tested and is structurally evaluated as meeting the requirements of NCHRP Report 350 Test Level 4.

All Concrete shall be Class "S" (f'c = 4000 psi).

Reinforcing steel shall conform to ASTM Specification A615. All reinforcing shall be furnished as Grade 60. All reinforcing shall be epoxy coated at locations above EL. 4000 ft.

All bends and hooks shall meet the requirements of AASHTO LRFD Article 5.10. All bend dimensions for reinforcing steel shall be out-to-out of bars. All placement dimensions for reinforcing steel shall be to center of bars unless noted otherwise.

All reinforcing steel shall have 2 inch clear cover unless noted otherwise.

Concrete barriers on continuous superstructures shall have ½" bituminous joint filler in open joints over piers. See bridge drawings for details.

Imbed ½", Bridge Number and Year Built, using 1½"w x 2"h number impressions in concrete, located as shown at the approach end of the outside lane.

Anchorage bars are included in the pay item for barrier (Item No. 6011130).

Omit bridge barrier transition when concrete barrier is continuous beyond bridge.

Dimensions shall not be scaled from drawings.

Item No. 6011130 F-SHAPE BRIDGE CONCRETE BARRIER AND TRANSITION (32")
Measure: Linear Foot

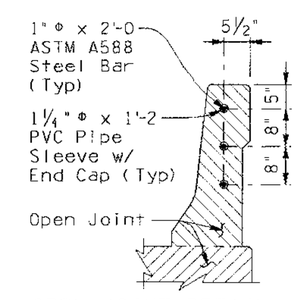

OPEN JOINT DETAIL
At Expansion Joints

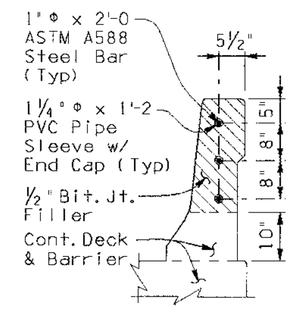

OPEN JOINT DETAIL
Over Continuous Piers

DESIGN APPROVED	ARIZONA DEPARTMENT OF TRANSPORTATION INTERMODAL TRANSPORTATION DIVISION BRIDGE GROUP STRUCTURE DETAIL
APPROVED FOR DISTRIBUTION	F-SHAPE BRIDGE CONCRETE BARRIER AND TRANSITION (32") NOMINAL

ROUTE	PROJECT NO.	FA NO.	DRAWING NO.
	4LCITR		SD 1.01
LOCATION: LA CHOLLA BLVD.: RUTHRAUFF RD. TO RIVER RD.			SHEET NO. 296 OF 356

TID	DESCRIPTION OF REVISIONS	MADE BY	DATE
1.	Original Issue	G.U.K.	8-99
5.	General Update	G.U.K.	11-07
6.	General Update, Title Block	G.U.K.	3-09
7.	*		

Note to Designer:
The information presented in this Standard Detail has been prepared in accordance with recognized engineering principles and is for general use. It should not be used for specific application without competent professional examination and verification of its suitability and applicability by a licensed professional engineer. Contents within the inner border line shall not be altered.

012145
00000000005914
Pima_County_Dept_of_Transportation\PCDOT-La_Cholla_Blvd-Ruthrauff\13.00_CAD\Construction_Documents\Civil\175-01.dgn

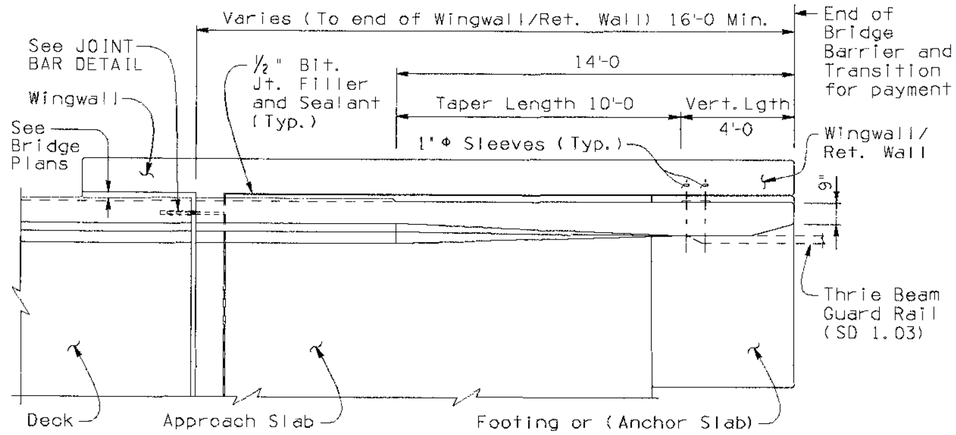

PLAN

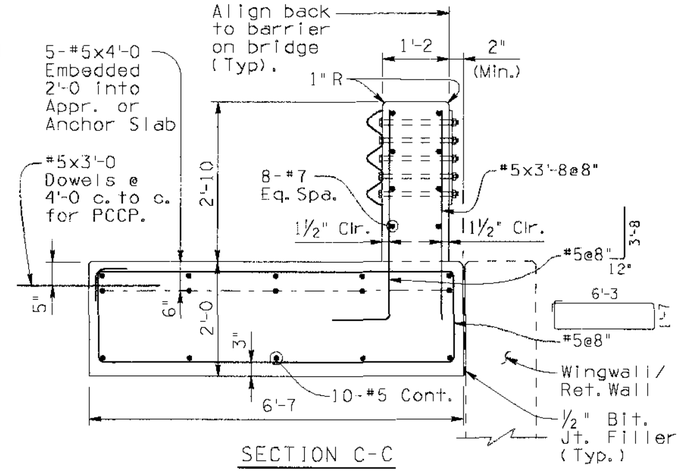

SECTION C-C

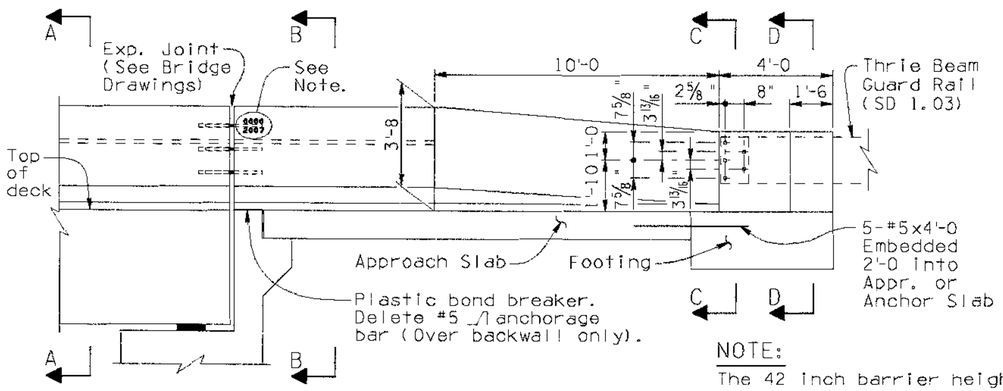

ELEVATION

NOTE:
The 42 inch barrier height is measured from the top of the (future) wearing surface (2 inch allowance).

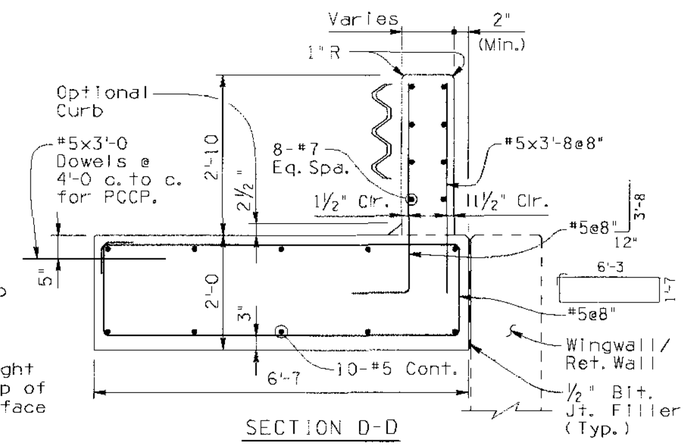

SECTION D-D

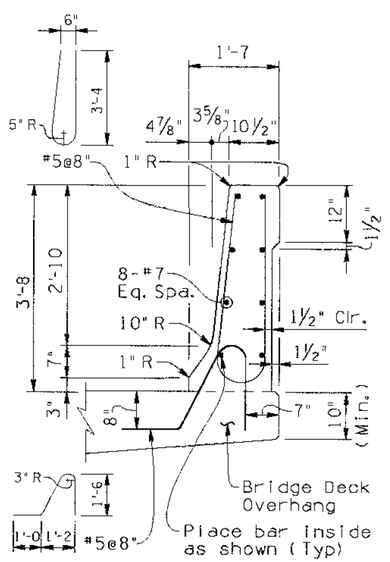

SECTION A-A

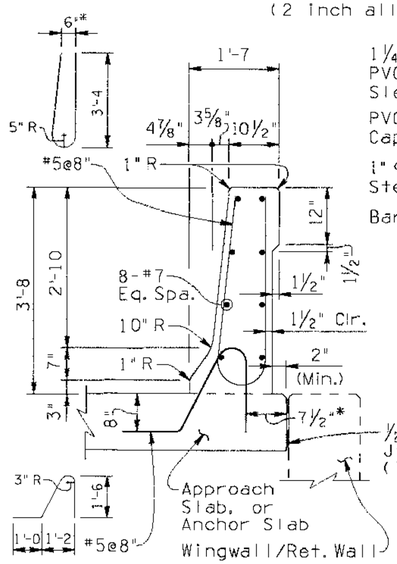

SECTION B-B

* Varies at taper length

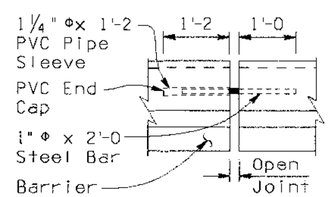

JOINT BAR DETAIL

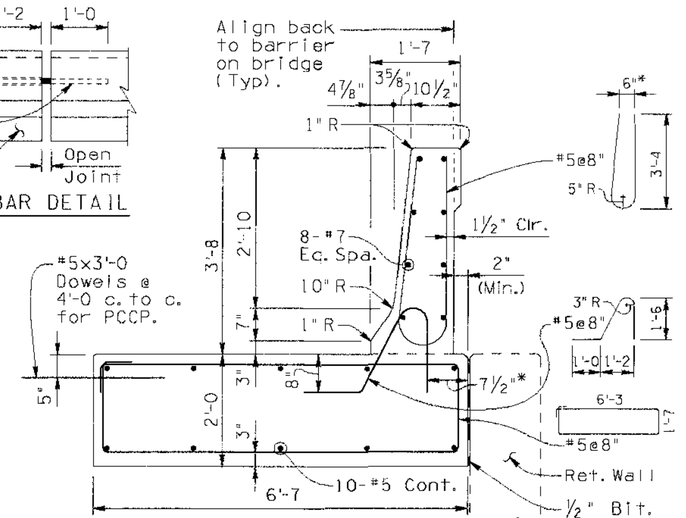

SECTION
Continuous Barrier With Footing

GENERAL NOTES:

Construction Specification - Arizona Department of Transportation Standard Specifications for Road and Bridge Construction, latest Edition.

Design Specifications - AASHTO LRFD Bridge Design Specifications, 4th Edition 2007.

This barrier has been successfully crash tested and is structurally evaluated as meeting the requirements of NCHRP Report 350 Test Level 5.

All Concrete shall be Class "S" (f'c = 4000 psi).

Reinforcing steel shall conform to ASTM Specification A615. All reinforcing shall be furnished as Grade 60. All reinforcing shall be epoxy coated at locations above EL. 4000 ft.

All bends and hooks shall meet the requirements of AASHTO LRFD Article 5.10. All bend dimensions for reinforcing steel shall be out-to-out of bars. All placement dimensions for reinforcing steel shall be to center of bars unless noted otherwise.

All reinforcing steel shall have 2 inch clear cover unless noted otherwise.

Concrete barriers on continuous superstructures shall have ½" bituminous joint filler in open joints over piers. See bridge drawings for details.

Imbed ½", Bridge Number and Year Built, using 1½"w x 2"h number impressions in concrete, located as shown at the approach end of the outside lane.

Anchorage bars are included in the pay item for barrier (Item No. 6011131).

Omit bridge barrier transition when concrete barrier is continuous beyond bridge.

Dimensions shall not be scaled from drawings.

Item No. 6011131 F-SHAPE BRIDGE CONCRETE BARRIER AND TRANSITION (42")
Measure: Linear Foot

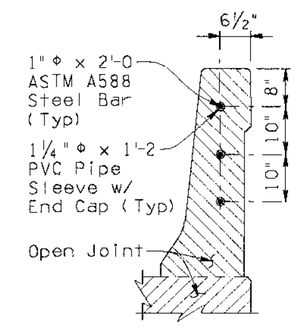

OPEN JOINT DETAIL
At Expansion Joints

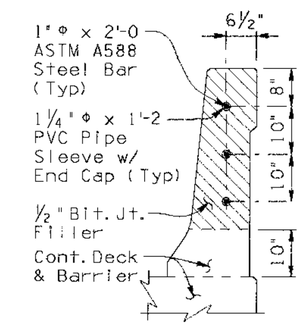

OPEN JOINT DETAIL
Over Continuous Piers

DESIGN APPROVED: Shafi U. Hasan	ARIZONA DEPARTMENT OF TRANSPORTATION INTERMODAL TRANSPORTATION DIVISION **BRIDGE GROUP STRUCTURE DETAIL**
APPROVED FOR DISTRIBUTION: Jean A. Nehme	F-SHAPE BRIDGE CONCRETE BARRIER AND TRANSITION (42") NOMINAL

ROUTE	PROJECT NO.	FA NO.	DRAWING NO.
	4LCITR		SD 1.02

LOCATION: LA CHOLLA BLVD.: RUTHRAUFF RD. TO RIVER RD.
SHEET NO. 297 OF 356

NO	DESCRIPTION OF REVISIONS	MADE BY	DATE
1	Original Issue	G.Wu	8-99
5	General Update	G.Wu	11-07
6	General Update, Title Block, Barrier Height	G.Wu	3-09
7			

Note to Designer:
The information presented in this Standard Detail has been prepared in accordance with recognized engineering principles and is for general use. It should not be used for specific application without competent professional examination and verification of its suitability and applicability by a licensed professional engineer. Contents within the inner border line shall not be altered.

01245
00000000005994
Pima_County_Dept_of_Transportation\PCDOT-La_Cholla_Blvd-Ruthrauff\13.00_CAD\Construction_Documents\Civil\TS-02.dgn

08\20\09 5:05:39 PM aledesma 3/24/2009 C:\Documents and Settings\hp003\Local Settings\Temporary Internet Files\OLK24D\sd102_0309.dgn

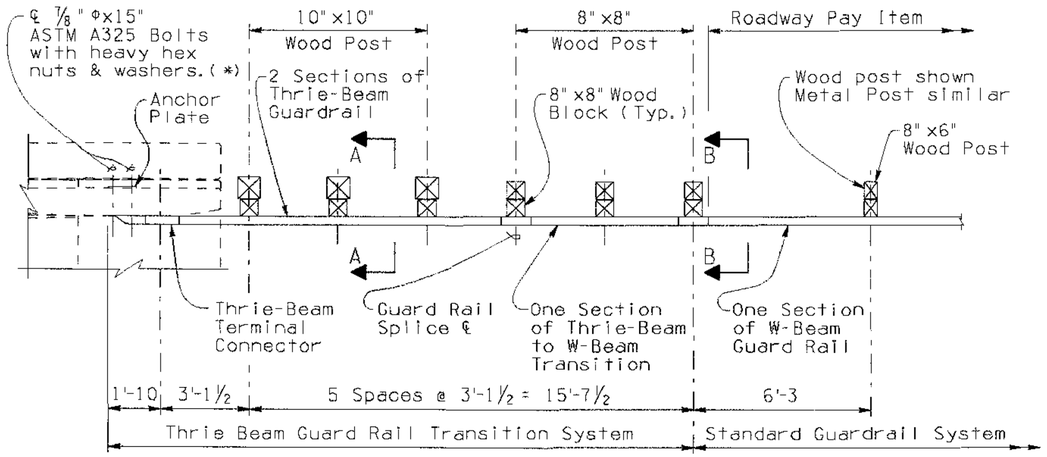

PLAN

(*) 7/8" Φx17" bolts for 42" F-Shape barrier transition.

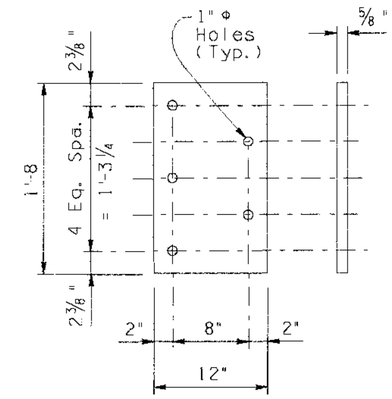

ANCHOR PLATE

GENERAL NOTES:

Thrie Beam Transition Hardware provided is per AASHTO-AGC-ARTBA Joint Committee Task Force 13 Report.

Structural steel shall conform to ASTM Specification A36 unless noted otherwise.

Anchor plates, terminal connectors and thrie beams shall be galvanized after fabrication in accordance with ASTM A123 unless noted otherwise. All bolts, nuts and washers shall be galvanized in accordance with the requirements of ASTM A153.
At the contractors option, stainless steel bolts and washers may be used. They shall conform to or exceed the mechanical requirements of ASTM A325.
Provide additional washers, as needed, for longer bolt length.

Overlap of the terminal connector, thrie beam, transition and guardrails shall be in the direction of the adjacent traffic lane.

Dimensions shall not be scaled from drawings.

Item No. 9050430 THRIE BEAM GUARD RAIL TRANSITION SYSTEM

Measure: Each

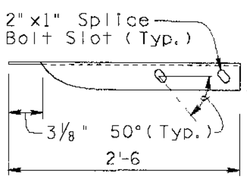

TOP VIEW

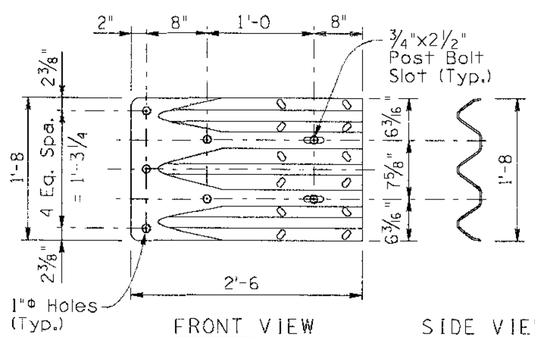

FRONT VIEW SIDE VIEW

THRIE BEAM TERMINAL CONNECTOR

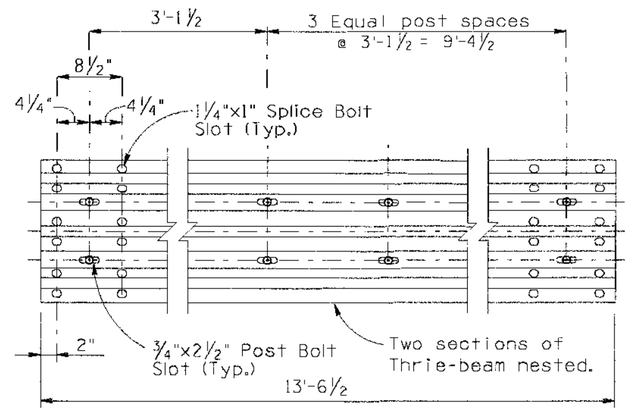

THRIE BEAM ELEVATION

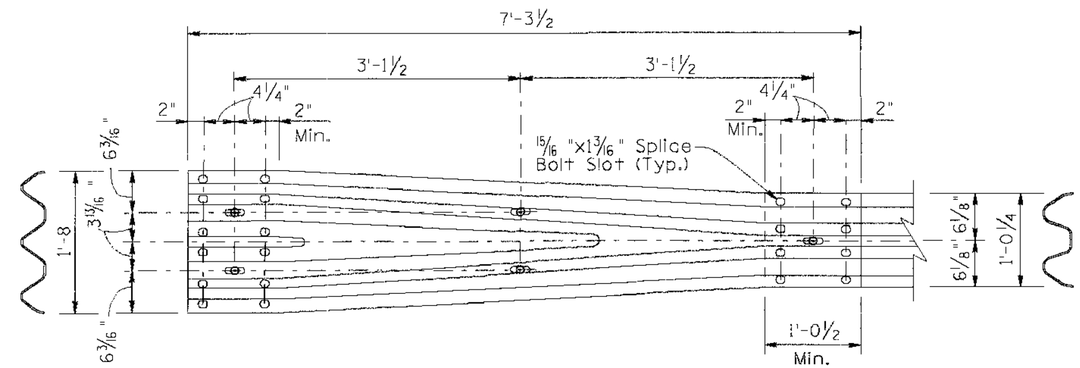

TRANSITION ELEVATION

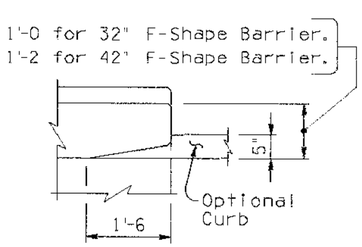

PART. PLAN
(Showing Opt. Curb)

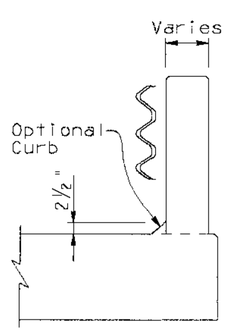

END VIEW
(Showing Opt. Curb)

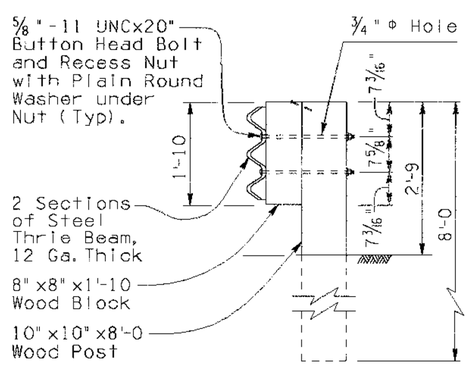

SECTION A-A

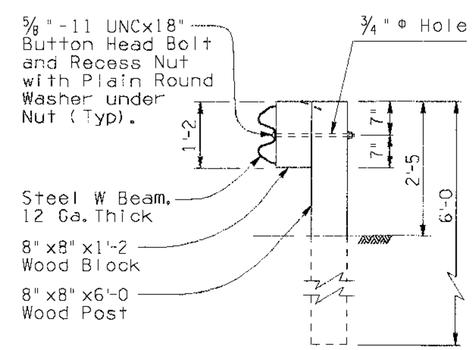

SECTION B-B

Note to Designer:
The information presented in this Standard Detail has been prepared in accordance with recognized engineering principles and is for general use. It should not be used for specific application without competent professional examination and verification of its suitability and applicability by a licensed professional engineer. Contents within the inner border line shall not be altered.

NO	DESCRIPTION OF REVISIONS	MADE BY	DATE
1	Original Issue	S.U.H.	8-99
5	General Update	S.U.H.	11-07
6	•	•	•
7	•	•	•

012145
00000000000059914
Pima_County_Dept_of_Transportation\PCDOT-La_Cholla_Blvd-Ruthrauff\13.00_CAD\Construction_Documents\Civil\17S-03.dgn

DESIGN APPROVED: Shafi U. Hasan
APPROVED FOR DISTRIBUTION: Jean A. Nehme

ARIZONA DEPARTMENT OF TRANSPORTATION
INTERMODAL TRANSPORTATION DIVISION
BRIDGE GROUP STRUCTURE DETAIL

THRIE BEAM GUARD RAIL TRANSITION SYSTEM

ROUTE	PROJECT NO.	FA NO.	DRAWING NO.
	4LCITR		SD 1.03

LOCATION: LA CHOLLA BLVD.: RUTHRAUFF RD. TO RIVER RD.

SHEET NO. 298 OF 356

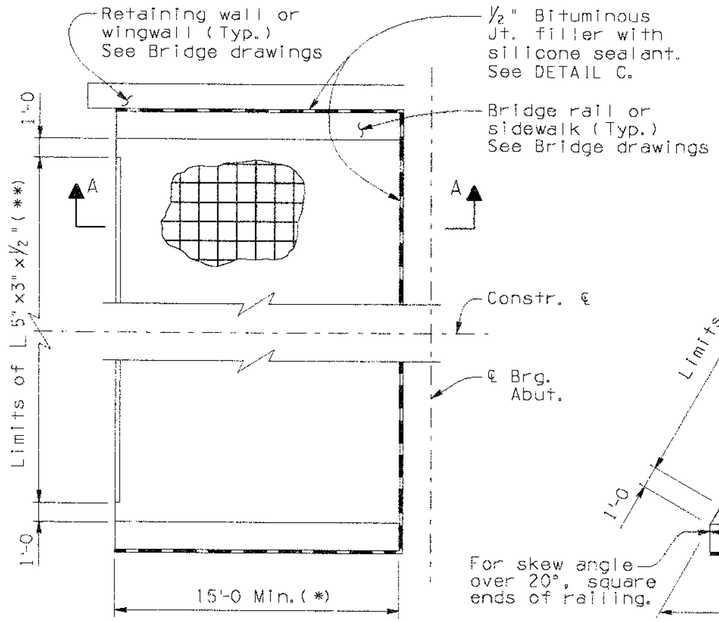

PLAN A
Rt. Angle Bridge

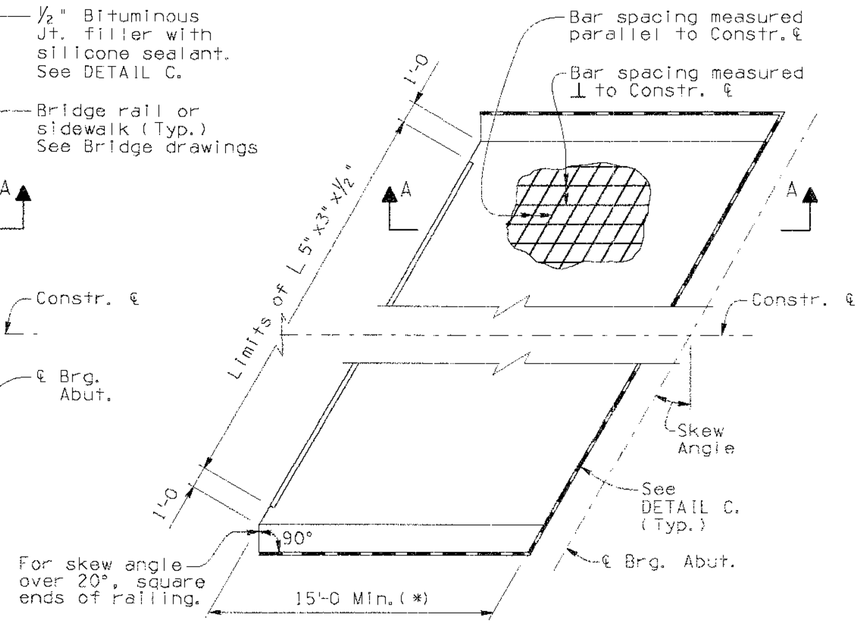

PLAN B
Skewed Bridge Without Anchor Slab
Skew Angle ≤ 45°

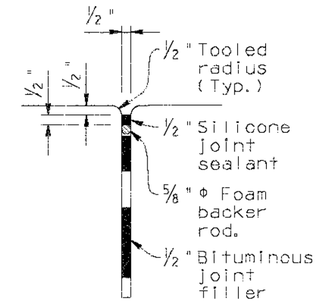

DETAIL C

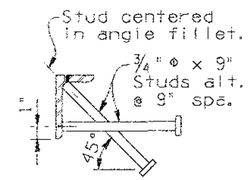

ALT. ANCHOR DETAIL

GENERAL NOTES:

Construction Specification - Arizona Department of Transportation Standard Specifications for Road and Bridge Construction, latest Edition.

Design Specifications - AASHTO LRFD Bridge Design Specifications, 4th Edition 2007.

All Concrete shall be Class 'S' (f'c = 4000 psi).

Reinforcing steel shall conform to ASTM Specification A615. All reinforcing shall be furnished as Grade 60. All reinforcing shall be epoxy coated at locations above EL. 4000 ft.

All bends and hooks shall meet the requirements of AASHTO Article 5.10. All bend dimensions for reinforcing steel shall be out-to-out of bars. All placement dimensions for reinforcing steel shall be to center of bars unless noted otherwise.

All reinforcing steel shall have 2 inch clear cover unless noted otherwise.

Structural steel shall conform to ASTM specification A588 Grade 50 or A709 Grade 50W.

All welding shall conform to the requirements of the American Welding Society, ANSI/AASHTO/AWS D1.5 Bridge Welding Code, latest Edition.

Dimensions shall not be scaled from drawings.

Item No. 6011371 APPROACH SLAB
Measure: Square Foot

JOINT NOTE:

½" Silicone joint sealant shall be ASTM D5893 Type NS. 2" Silicone joint sealant shall be rapid-cure, self leveling, two-part silicone rubber sealant designed for expansion joints. Prime coat concrete sides of joint. Do not prime coat the backer rod. Backer rod shall be closed cell polyethylene foam.

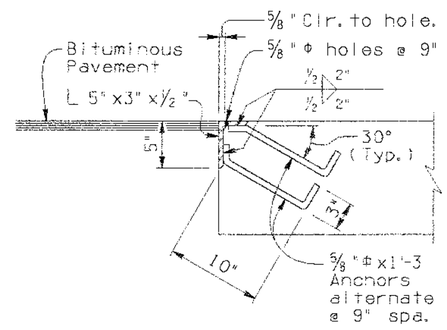

DETAIL A
Bituminous Pavement Alternate

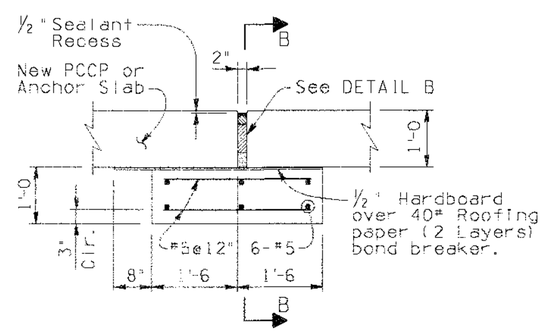

DETAIL A
Concrete Pavement Alternate

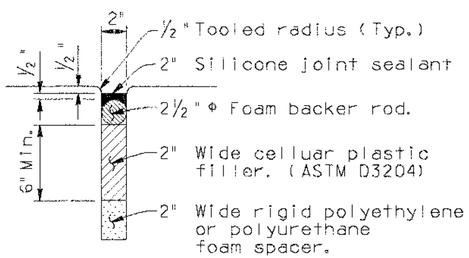

DETAIL B

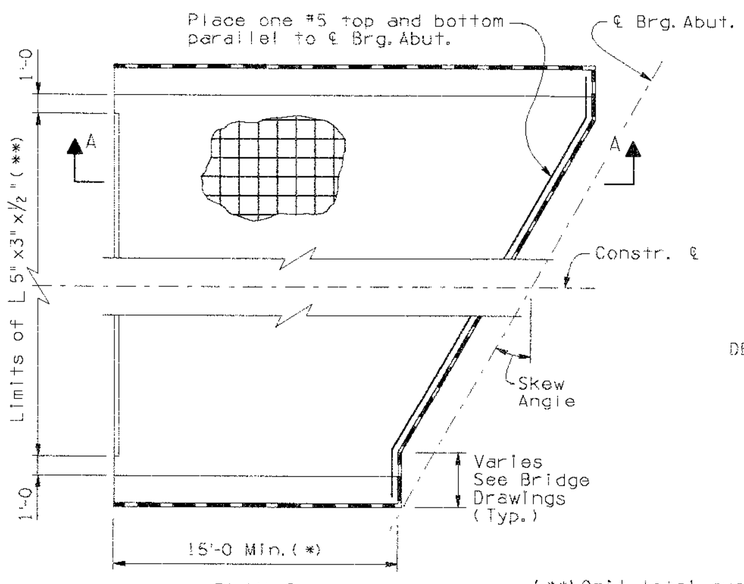

PLAN C
Skewed Bridge
Skew Angle > 45°

(**) Omit total guard angle for concrete pavement alternate.

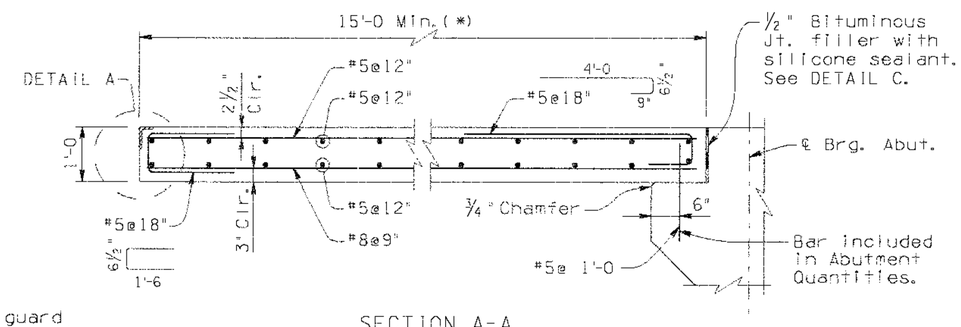

SECTION A-A

(*) See Bridge drawings for length.

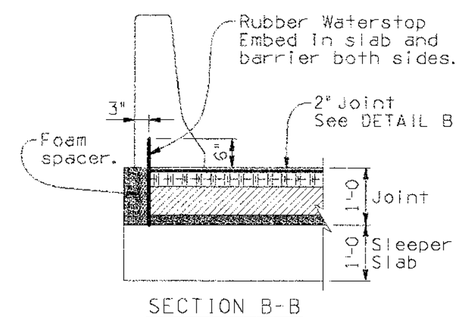

SECTION B-B

DESIGN APPROVED	ARIZONA DEPARTMENT OF TRANSPORTATION INTERMODAL TRANSPORTATION DIVISION BRIDGE GROUP STRUCTURE DETAIL
APPROVED FOR DISTRIBUTION	APPROACH SLAB DETAILS
ROUTE / PROJECT NO. 4LCITR / F.A. NO.	DRAWING NO. SD 2.01
LOCATION LA CHOLLA BLVD.: RUTHRAUFF RD. TO RIVER RD.	SHEET NO. 299 OF 356

TIC	DESCRIPTION OF REVISIONS	MADE BY	DATE
1	Original Issue	M.K.P.	11-00
2	General Update	S.U.P.	12-07
3			
4			

This Standard Detail has been prepared in accordance with recognized engineering principles and is for general use. It should not be used for specific application without competent professional examination and verification of its suitability and applicability by a licensed professional engineer. Contents within the inner border line shall not be altered.

012145
00000000005994
Pima_County_Dept._of._Transportation\PCDOT-La_Cholla_Blvd-Ruthrauff\13.00_CAD\Construction_Documents\Civil\75-04.dgn

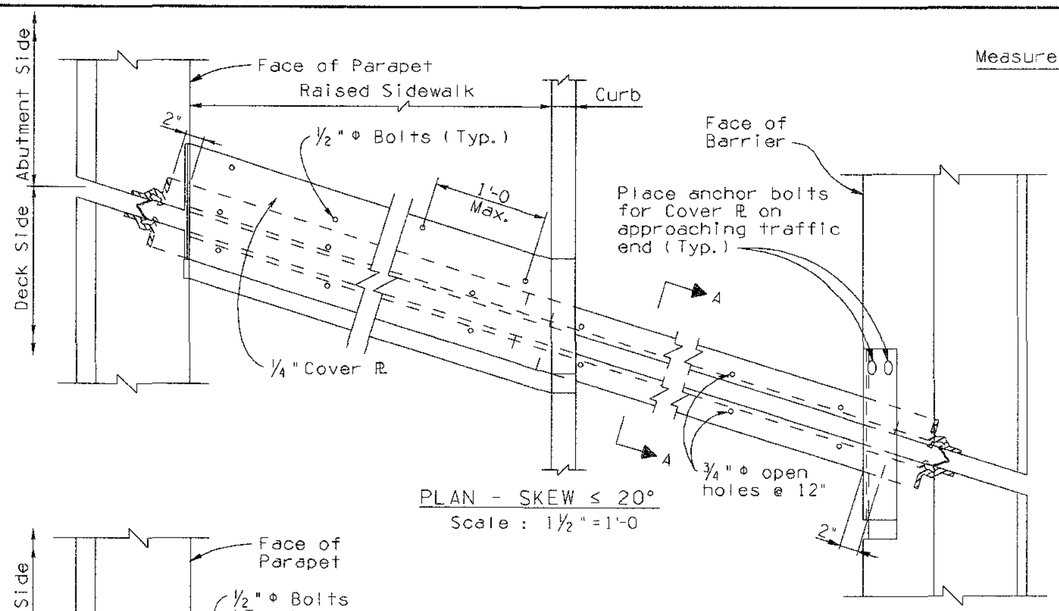

PLAN - SKEW ≤ 20°
Scale : 1½" = 1'-0

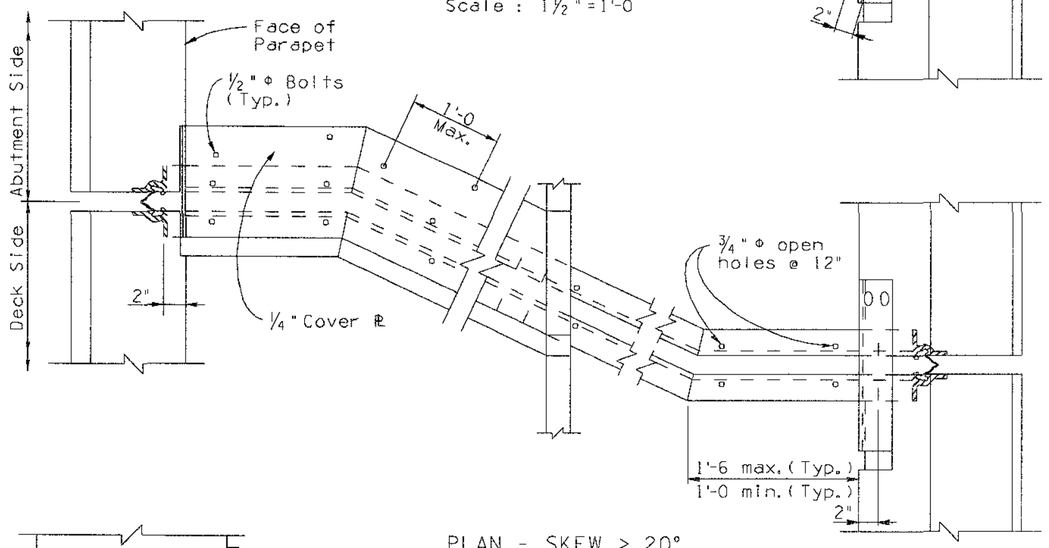

PLAN - SKEW > 20°
Scale : 1½" = 1'-0

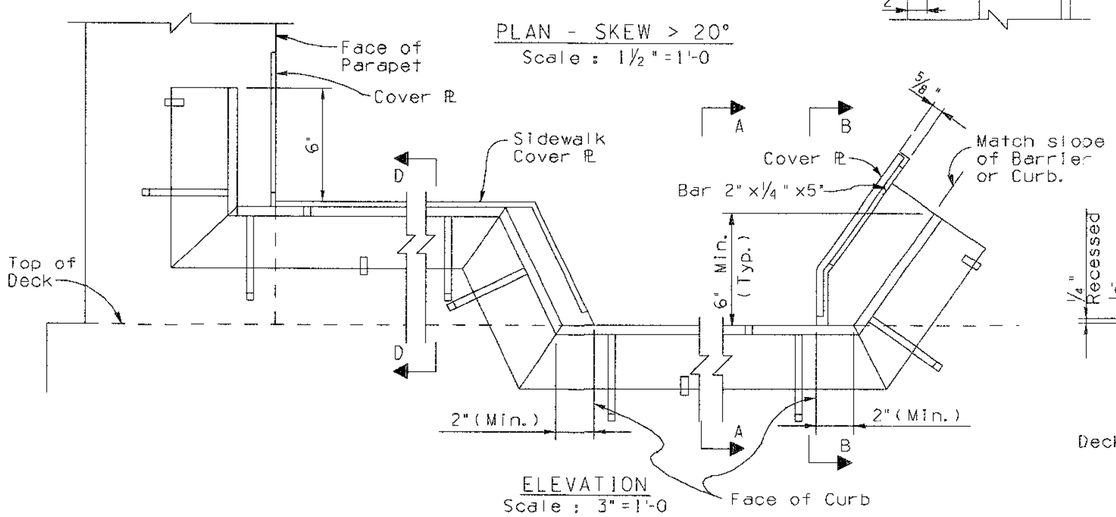

ELEVATION
Scale : 3" = 1'-0

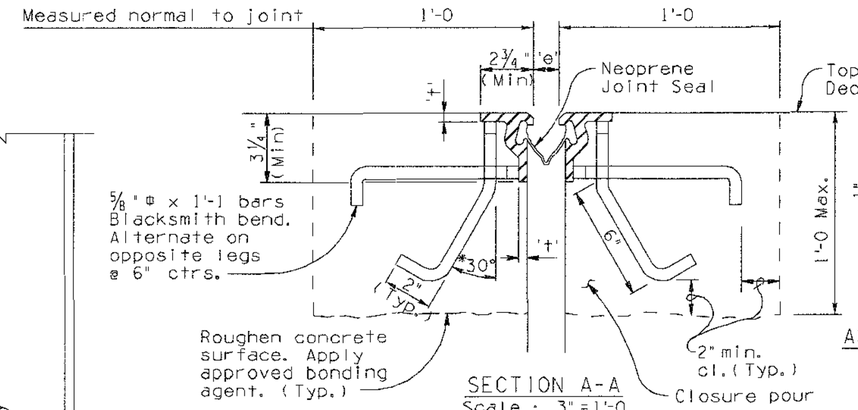

SECTION A-A
Scale : 3" = 1'-0

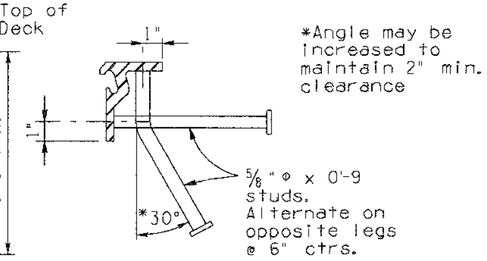

ALTERNATE ANCHOR DETAIL
Scale 3" = 1'-0

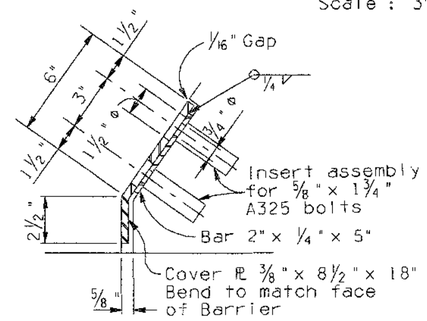

SECTION C-C
Scale : 3" = 1'-0

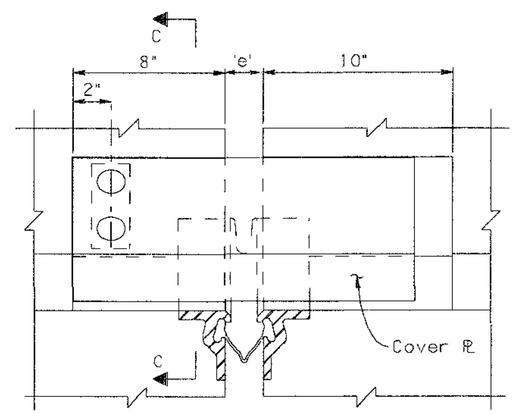

VIEW B-B
Scale : 3" = 1'-0

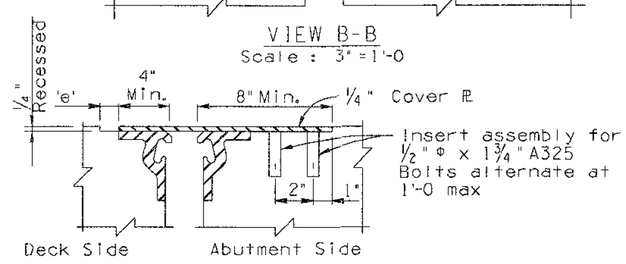

SECTION D-D
Scale : 3" = 1'-0

NOTES :

The Strip Seal Joint may be used only for movement ratings of 4 inches or less.

The 'e' value may require recalculation and Movement Rating increased to accommodate minimum installation opening prior to approval of the shop drawings.

Retainer rails may be of A36 or A588 extrusions.
Minimum weight per foot = 8.5 Lbs
Minimum thickness, 't' = 3/8 inches
Rails shall be supplied in the maximum length practical consistent with normal manufactured length of the rail. Rail splices when required shall be field welded per DETAIL E.

The neoprene seal shall be supplied continuous full length without splices.

Unless noted otherwise extrusions using A36 steel and all plates shall be painted. Surfaces in contact with concrete and recess area for strip seal shall not be painted. A588 extrusions and plates need not be painted.

Joint seal assembly to be used in conjunction with closure pour. (See bridge drawings for limits). Closure pour shall not be placed until final deck surface is within the tolerance specified.

Sidewalk cover plates shall be ¼" thick galvanized steel with non-slip (deformed) surface. Details may vary from those shown here and shall be shown on the shop drawings.

Item No. 6011345. Deck Joint Assembly (Strip Seal Joint) Measurement: LF.

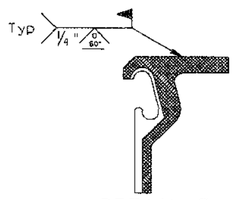

DETAIL E

DESIGN APPROVED Shafi U. Hasan	ARIZONA DEPARTMENT OF TRANSPORTATION INTERMODAL TRANSPORTATION DIVISION **BRIDGE GROUP STRUCTURE DETAIL**
APPROVED FOR DISTRIBUTION J. Daniel Dare	DECK JOINT ASSEMBLY STRIP SEAL
ROUTE / LOCATION *LA CHOLLA BLVD.: RUTHRAUFF TO RIVER*	DRAWING NO. SD 3.02
TRACS NO. *4LCITR*	*300* OF *356*

012145
00000000005914
Pima_County_Dept_of_Transportation\PCDOT-La_Cholla_Blvd-Ruthrauff\13.00_CAD\Construction_Documents\Civil\175-05.dgn
08\20\09 5:05:51 PM aledesma

LA CHOLLA BOULEVARD
RUTHRAUFF ROAD TO RIVER ROAD

Project No. 4LCITR

Right of Way on La Cholla Boulevard Between Ruthrauff Rd. & River Rd.

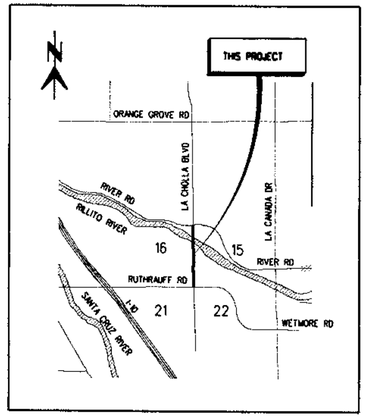

VICINITY MAP
(T-13S R-13E G. & S.R.M.)

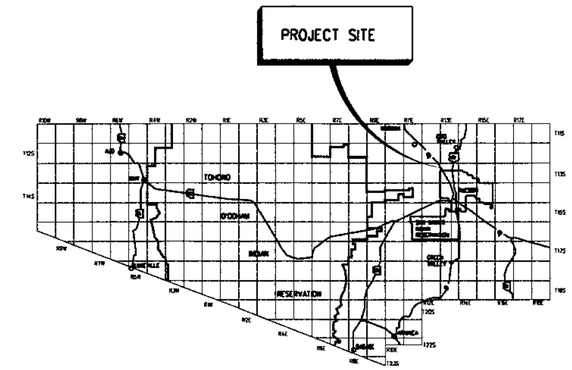

LOCATION MAP
SECTIONS
15,16,21,22 T13S, R13E
G. & S.R.M.
PIMA COUNTY, ARIZONA

RIGHT-OF-WAY REQUIREMENT PLANS

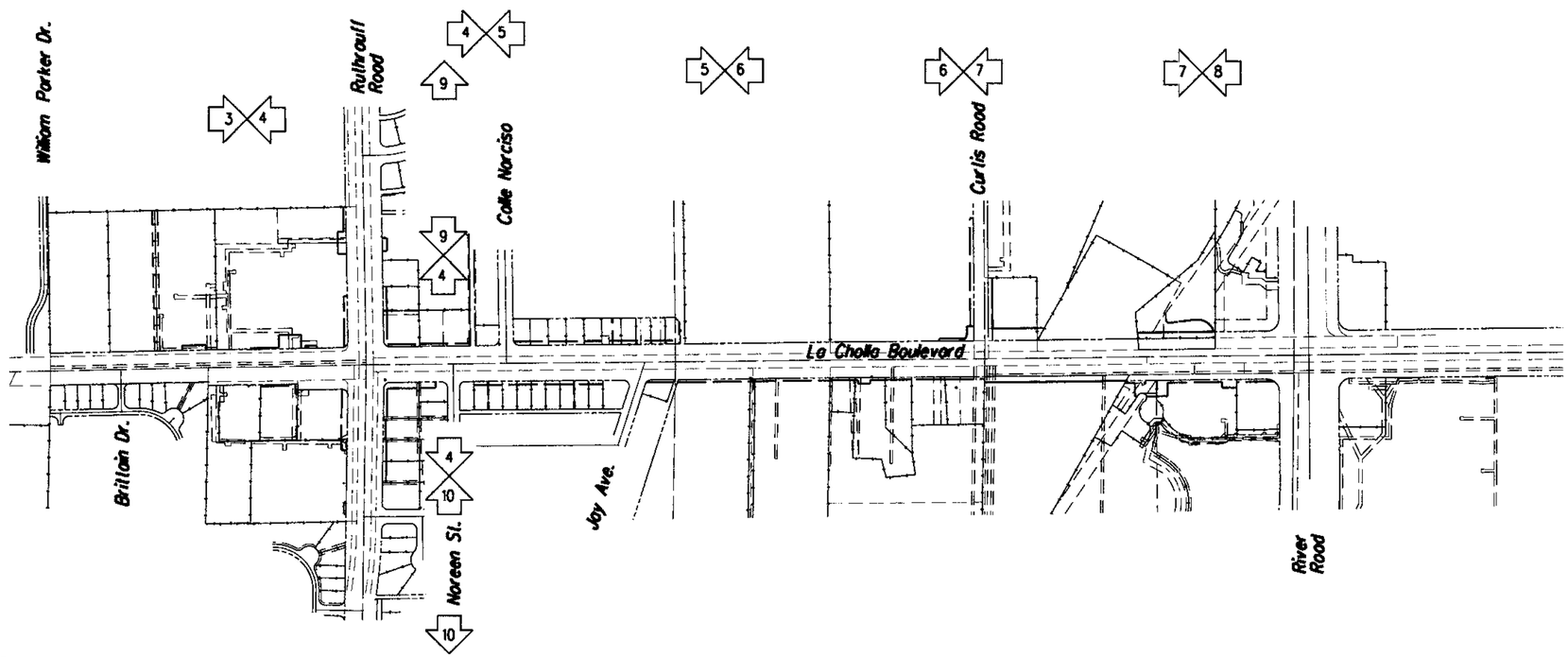

SCALE: 1"=300'

La Cholla Blvd.: Ruthrauff Rd. to River Rd. No. 4LCITR

PIMA COUNTY
BOARD OF SUPERVISORS
RICHARD ELIAS, CHAIR, DIST. 5

ANN DAY, DIST. 1
RAMON VALADEZ, DIST.2
SHARON BRONSON, DIST. 3
RAYMOND CARROLL, DIST. 4

This Project is Located In Supervisor District 3 (South Of The Rillito River) And In Superviser District 1 (North Of The Rillito River).

THE SEAL OF PIMA COUNTY ARIZONA

Arizona Blue Stake
1-800-STAKE-IT
1-800-782-5348
Call Two Working Days Before You Dig

Date: 08\05\09

HDR

HDR Engineering, Inc.
5210 East Williams Circle, Suite 530
Tucson, AZ 85711-4459
(520) 584-3600

No.	Revisions	Engineer	Date
No.	As Built	Engineer	Date

REGISTERED BASIS OF BEARING CERTIFICATE NO. 18211 FRANK D. ABELL DATE SIGNED 8-6-09 ARIZONA, U.S.A.
Expires 03-31-2011

Pima County Department of Transportation
201 N. Stone Ave. Tucson, Arizona 85701
Priscilla S. Cornelio, P.E., Director

Reviewed by	Engineer	Date
Mgr. Design Engr.		8/6/09
Mgr. Traffic Engr.		8-10-09
Mgr. Field Engr.		8-10-09

Approved: 8/10 2009
Priscilla S. Cornelio, P.E.

Project No. 4LCITR

Sheet No. RW1 of RW15

Page No. 301 of 356

File: C:\PWworking\PHX\dms54831\18V-01.dgn

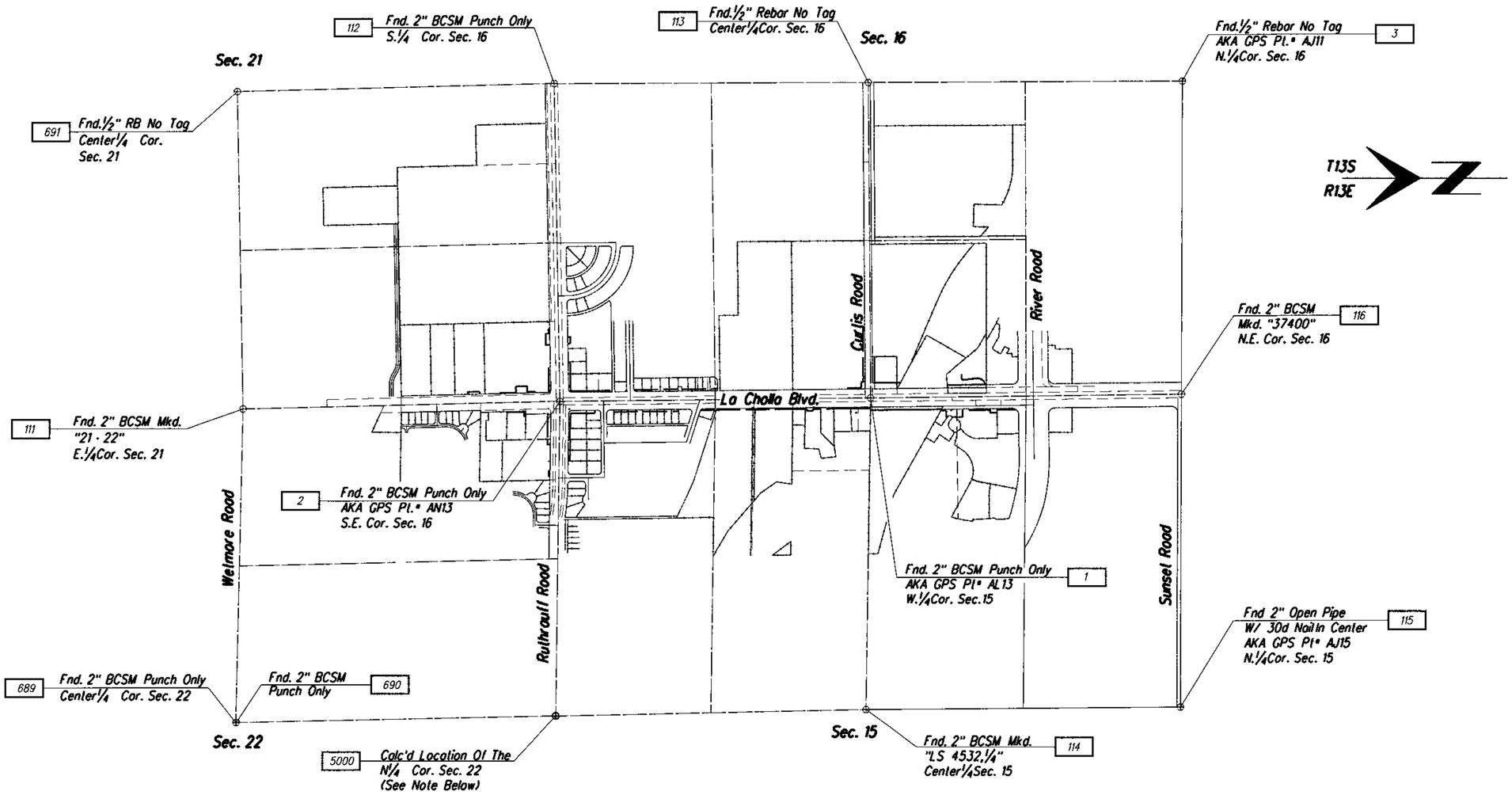

Note:

S.M. Destroyed - Calc'd & reset with a pvmt. nail & tag "RLS 18211" per PCDOT GIS Pt. N15 location using converted coordinates. (According to T.N. Stevens, he set a W.C. 1.0' N. of 1/4 corner in 1944 due to a bldg. being at the correct 1/4 Cor. location). By 1961 (Sid Cain Survey) the bldg. was gone and a new S.M. (1 1/4" O.P. W/Nail) was set. I believe by this time the cor. had been reset to the correct 1/4 Cor. location as the original W.C. would have been wiped out when the bldg. was destroyed. This location is the same as N15, which has been destroyed.

Vertical Control:

Vertical Control For This Project Is Based On Pima County Geodetic Control Point AL13, That Point Being A Found 2" BCSM Punch Only At The Intersection Of La Cholla And Curtis Road, Said Elevation Being 2265.62 (NAVD 88). This Monument Is Also A City Of Tucson Bench Mark Documented In Field Book 1989-B-1, At Page 67.

Horizontal Control:

Horizontal Control Is Based On Pima County Geodetic Control Points AL13, AN13, And AJ11 Holding A Scale Factor Of 1.0001189.34 (At AL13) Is Applied To The A.S.P.C.S. Values To Convert Grid Coordinates To Ground.

Pt.	Description	Grid Northing	Grid Easting	Ground Northing	Ground Easting	Elev (N.A.V.D.88)
AL13	2" BCSM Punch Only Intersection of La Cholla Blvd. & Curtis Road.	474,587.199	979,491.277	474,643.644	979,607.772	2265.62
AN13	2" BCSM Punch Only Intersection of La Cholla Blvd. & Ruthrauff Road.	471,997.321	979,520.098	472,053.458	979,636.596	2269.27
AJ11	1/2" Rebar No Tag ℄ Sunset Road & 0.5 Mile West of La Cholla Blvd.	477,185.785	976,864.094	477,242.539	976,980.276	2249.79

No.	Revision Description	Engineer	Date

		Date
Designed	JTS	10/08
Drawn	JTS	10/08
Checked	FDA	10/08
Proj. Engr.	TWB	10/08

ARIZONA LAND SURVEYOR CERTIFICATE NO. 18211 FRANK D. ABELL ARIZONA, U.S.A.
Expires 03-31-2011

HDR Engineering, Inc.
8210 East Williams Circle, Suite 530
Tucson, AZ 85711-4459
(520) 584-3600

Pima County Department of Transportation

Priscilla S. Cornelio, P.E. Director

RIGHT OF WAY PLANS
LA CHOLLA
RUTHRAUFF RD. TO RIVER RD.
W.O. 4LCITR

Scales	Horiz. 1" = 500' Vert. N/A	Sheet RW2 of RW15	Page 302 of 356

Date: 08\31\09

File: C:\PWworking\PHX\dms54831\18V-02.dgn

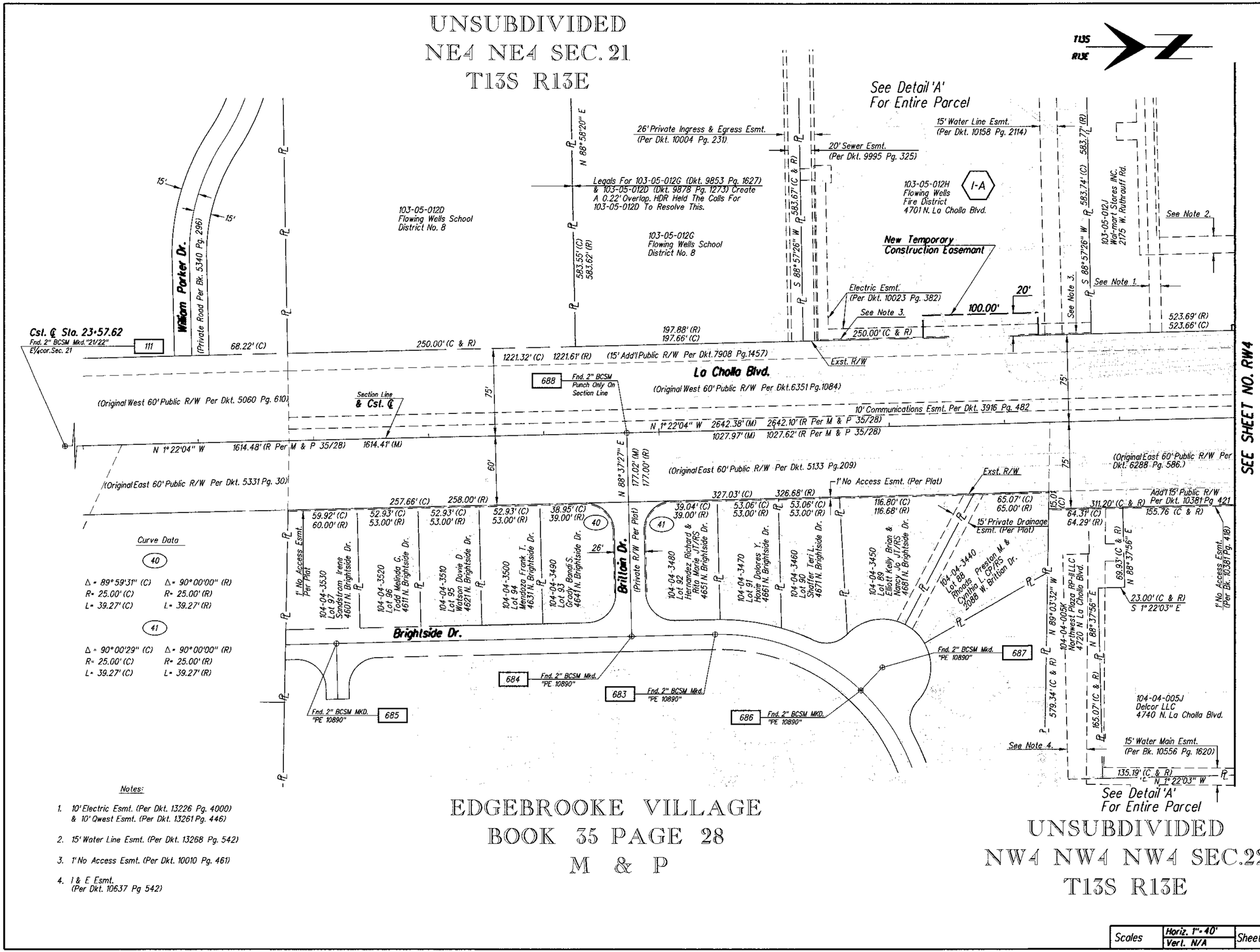

Scales	Horiz. 1" = 40'	Sheet	RW3 of RW15	Page	303 of 356
	Vert. N/A				

Pima County Department of Transportation

RIGHT OF WAY PLANS
LA CHOLLA
RUTHRAUFF RD. TO RIVER RD.
W.O. 4LCITR

HDR Engineering, Inc.
5220 Fountain Hills Circle, Suite 530
Tucson, AZ 85711-4459
(520) 384-3600

Priscilla S. Cornelio, P.E. Director

No.	Revision Description	Engineer	Date

		Date
Designed	JTS	10/08
Drawn	JTS	10/08
Checked	FDA	10/08
Proj. Engr.	TWB	10/08

RICHMOND LAND SURVEYING CERTIFICATE NO. 18211 FRANK D. ABELL DATE SIGNED 8-5-09 ARIZONA, U.S.A.

Expires 03-31-2011

Date: 08\31\09

File: C:\PWworking\PHX\dms54831\18V-03.dgn

UNSUBDIVIDED
NE4 NE4 SEC.21
T13S R13E

T13S
R13E

LA CHOLLA
BOOK 13 PAGE 41
M & P

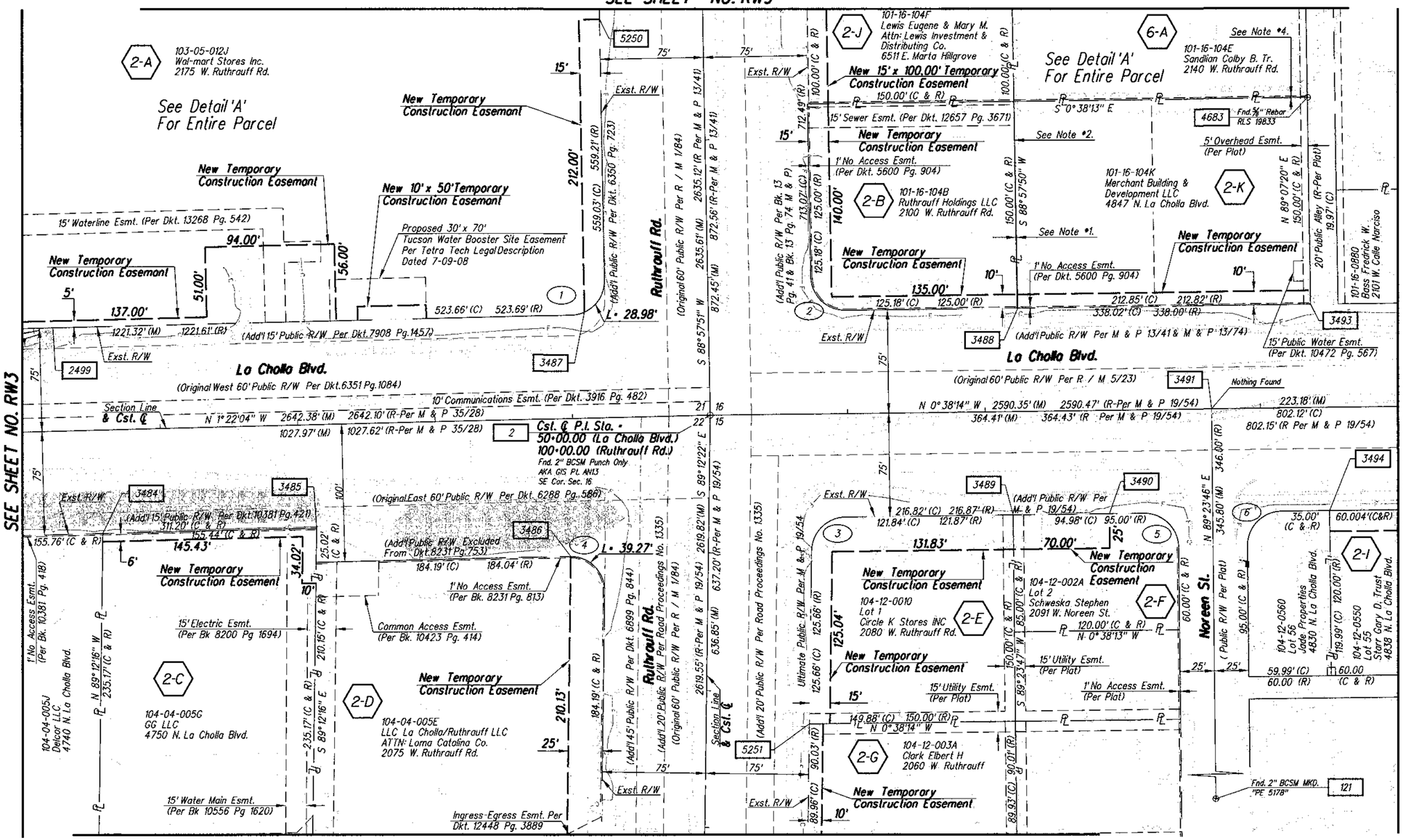

Curve Data

1	Δ = 89°40'06" (C)	Δ = 89°40'10" (R)
	R = 25.00' (C)	R = 25.00' (R)
	L = 39.13' (C)	L = 39.13' (R)
2	Δ = 89°36'05" (C)	Δ = 89°36'00" (R)
	R = 25.00' (C)	R = 25.00' (R)
	L = 39.10' (C)	L = 39.10' (R)
3	Δ = 88°33'57" (C)	Δ = 88°34'55" (R)
	R = 25.00' (C)	R = 25.00' (R)
	L = 38.65' (C)	L = 38.65' (R)
4	Δ = 92°09'42" (C)	Δ = 92°09'46" (R)
	R = 25.00' (C)	R = 25.00' (R)
	L = 40.21' (C)	L = 40.21' (R)
5	Δ = 90°02'01" (C)	Δ = 90°00'00" (R)
	R = 25.00' (C)	R = 25.00' (R)
	L = 39.29' (C)	L = 39.26' (R)
6	Δ = 89°57'59" (C)	Δ = 90°00'00" (R)
	R = 25.00' (C)	R = 25.00' (R)
	L = 39.26' (C)	L = 39.26' (R)

Notes:

1. Difference Between Legals For Parcels 2-B & 101-16-104K = 0.02' Overlap @ W. End Line TO 0.45' Overlap @ E. End Line.
2. Development Plan @ BK 30 Pg 23 For Dollar Store Accepts The Northerly Line Of The 2 Positions As The Property Line. HDR Accepts The North Line Of Parcel 101-16-104B As The Property Line.
3. The W1/2 Of The SW4 Sec.15 Is Subject To: Blanket Esmt. For Irrigation & Blanket Esmt. For Electric (Per Bk. Deeds 132 Pg. 605)
4. 1.07' Gap Between Legal Described In Exhibit "ONE" Title No. S0043080-CB

UNSUBDIVIDED
NW4 NW4 NW4 SEC.22
T13S R13E

CHOLLA MANOR
BOOK 19 PAGE 54
M & P

(See Note 3)

No.	Revision Description	Engineer	Date

		Date
Designed	JTS	10/08
Drawn	JTS	10/08
Checked	FDA	10/08
Proj. Engr.	TWB	10/08

Priscilla S. Cornelio, P.E. Director

Registered Land Surveyor Certificate No. 19211 Frank D. Abell Date Signed 8-31-09 Arizona, U.S.A.
Expires 03-31-2011

HDR
HDR Engineering, Inc. 5210 E. Williams Circle, Suite 530 Tucson, AZ 85711-4459 (520) 584-3600

Pima County Department of Transportation

RIGHT OF WAY PLANS
LA CHOLLA
RUTHRAUFF RD. TO RIVER RD.
W.O. 4LCITR

Scales	Horiz. 1" = 40' Vert. N/A	Sheet RW4 of RW15	Page 304 of 356

Date: 08\31\09

File: C:\PWworking\PHX\dms54831\18V-04.dgn

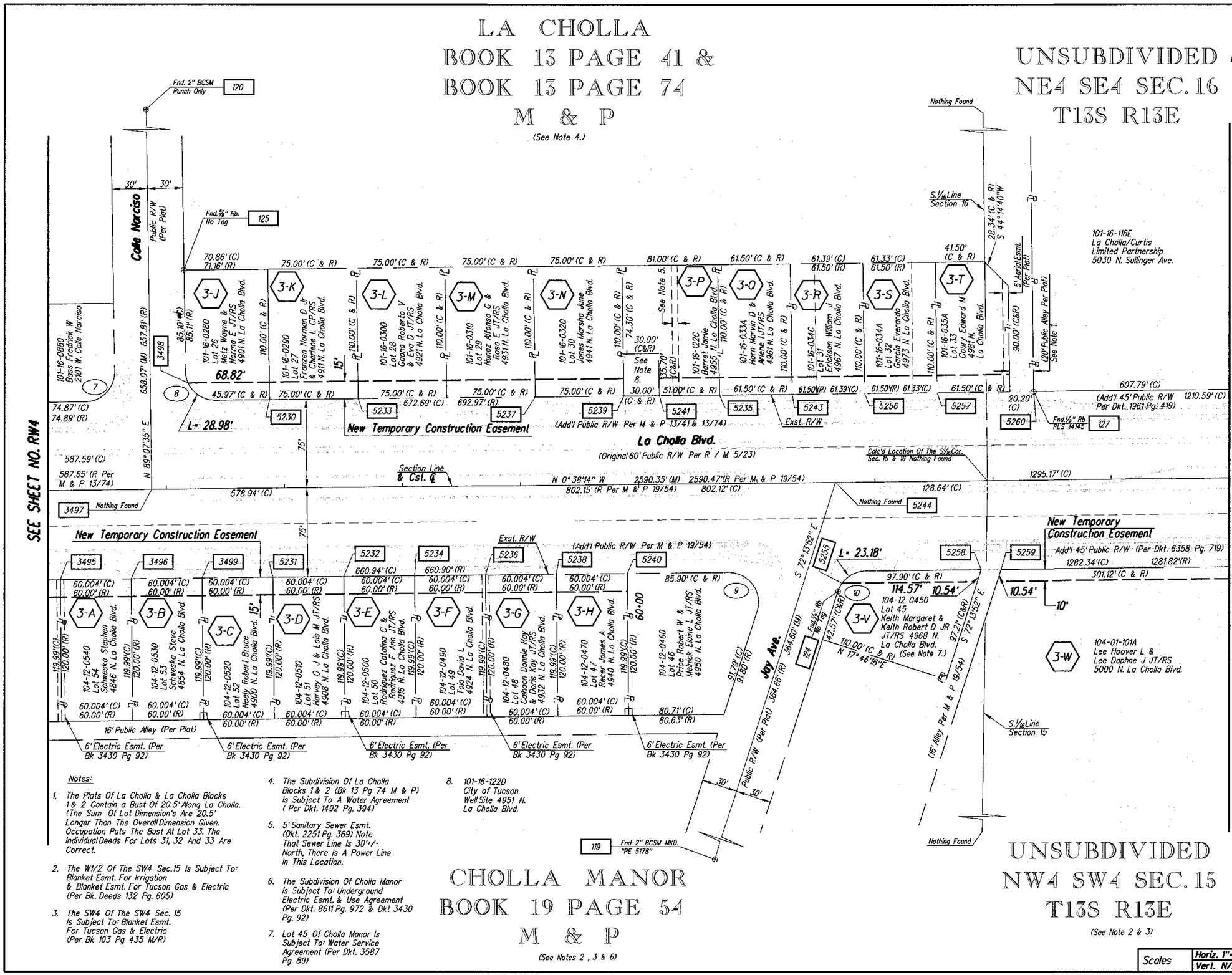

Notes:

1. The Plats Of La Cholla & La Cholla Blocks 1 & 2 Contain a Bust Of 20.5' Along La Cholla. (The Sum Of Lot Dimension's Are 20.5' Longer Than The Overall Dimension Given. Occupation Puts The Bust At Lot 33. The Individual Deeds For Lots 31, 32 And 33 Are Correct.
2. The W1/2 Of The SW4 Sec.15 Is Subject To: Blanket Esmt. For Irrigation & Blanket Esmt. For Tucson Gas & Electric (Per Bk. Deeds 132 Pg. 605)
3. The SW4 Of The SW4 Sec. 15 Is Subject To: Blanket Esmt. For Tucson Gas & Electric (Per Bk 103 Pg 435 M/R)
4. The Subdivision Of La Cholla Blocks 1 & 2 (Bk 13 Pg 74 M & P) Is Subject To A Water Agreement (Per Dkt. 1492 Pg. 394)
5. 5' Sanitary Sewer Esmt. (Dkt. 2251 Pg. 369) Note That Sewer Line Is 30'+/- North, There Is A Power Line In This Location.
6. The Subdivision Of Cholla Manor Is Subject To: Underground Electric Esmt. & Use Agreement (Per Dkt. 8611 Pg. 972 & Dkt 3430 Pg. 92)
7. Lot 45 Of Cholla Manor Is Subject To: Water Service Agreement (Per Dkt. 3587 Pg. 89)
8. 101-16-122D City of Tucson Well Site 4951 N. La Cholla Blvd.

CHOLLA MANOR
BOOK 19 PAGE 54
M & P
(See Notes 2 , 3 & 6)

UNSUBDIVIDED
NW4 SW4 SEC. 15
T13S R13E
(See Note 2 & 3)

No.	Revision Description	Engineer	Title

		Date
Designed	JTS	10/08
Drawn	JTS	10/08
Checked	FDA	10/08
Proj. Engr.	TWB	10/08

Priscilla S. Cornelio, P.E. Director

REGISTERED LAND SURVEYOR CERTIFICATE NO. 19211 FRANK D. ABELL ARIZONA, U.S.A. 8-31-11

Expires 03-31-2011

HDR Engineering, Inc. 5210 E. Williams Circle, Suite 530 Tucson, AZ 85711-4459 (520) 394-3600

Pima County Department of Transportation

RIGHT OF WAY PLANS
LA CHOLLA
RUTHRAUFF RD. TO RIVER RD.
W.O. 4LCITR

Scales	Horiz. 1" = 40'	Sheet RW5 of RW15	Page 305 of 356
	Vert. N/A		

Date: 08\31\09

File: C:\PWworking\PHX\dms54831\18V-05.dgn

UNSUBDIVIDED
NE4 SE4 SEC. 16
T13S R13E

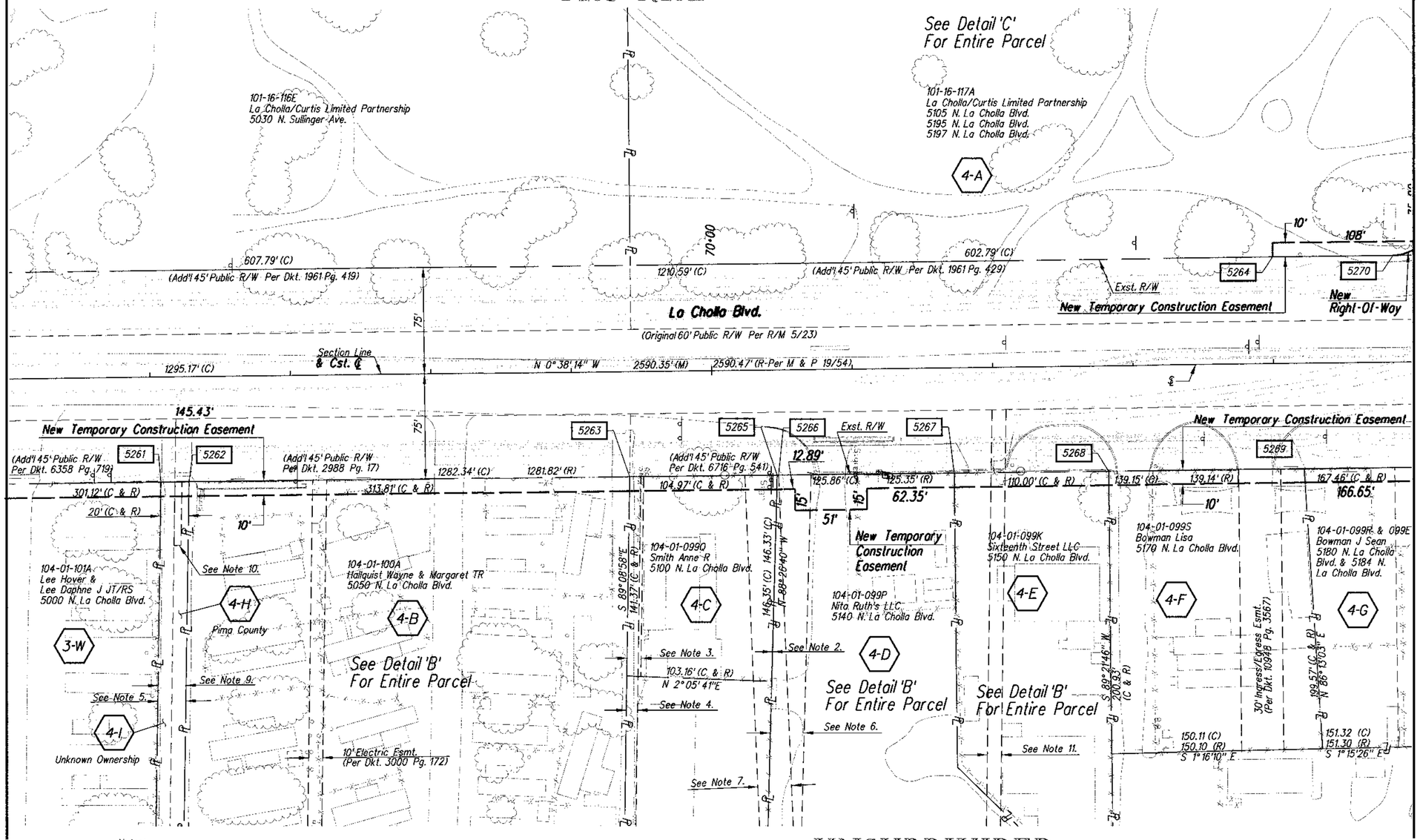

SEE SHEET NO. RW5

SEE SHEET NO. RW7

Notes:

1. The W1/2 Of The SW4 Sec. Is Subject To: Blanket Esmt. For Irrigation & Blanket Esmt. For Electric (Per Bk. Deeds 132 Pg. 605 & Bk. 64 Pg. 485)
2. Adjoining Deeds For 104-01-099Q (Dkt. 9917 Pg. 1227) & 104-01-099P (Dkt. 12710 Pg. 9882) Create A 0.13' Hiatus.
3. 10' Private Ingress/Egress Esmt. Per Bk. 6355 Pg 531
4. 8' Private Access & Utility Esmt. (Per Dkt. 7479 Pg. 88)
5. This 10' Gap Created By Exception In (Dkt. 6307 Pg. 418) & Is Of Unknown Ownership.
6. 24' Private Access & Utility Esmt. (Per Dkt. 9917 Pg. 1227)
7. 24' Private Access & Utility Esmt. (Per Dkt. 7479 Pg. 88)
8. The N1/2 Of The NW4 Of The SW4 Sec. 15 Is Subject To Floodplain Use Permit (Per Dkt. 5981 Pg. 622)
9. A 10' Strip Of Land Dedicated To Pima County (Per Dkt. 3171 Pg. 555)
10. Telephone Esmt. (Per Dkt. 7902 Pg. 719)
11. 10' Telephone Esmt. (Per Dkt. 1140 Pg. 287)

UNSUBDIVIDED
NW4 SW4 SEC. 15
T13S R13E

(See Note 1 & 8)

No.	Revision Description	Date	Engineer	Date	Designed	JTS	10/08
					Drawn	JTS	10/08
					Checked	FDA	10/08
					Proj. Engr.	TWB	10/08

Priscilla S. Cornelio, P.E. Director

REGISTERED LAND SURVEYOR
CERTIFICATE NO.
19211
FRANK D.
ABELL
DATE SIGNED 8-31-09
ARIZONA, U.S.A.
Expires 03-31-2011

Pima County Department of Transportation

HDR Engineering, Inc.
5210 E. Williams Circle, Suite 530
Tucson, AZ 85711-4459
(520) 584-3600

RIGHT OF WAY PLANS
LA CHOLLA
RUTHRAUFF RD. TO RIVER RD.
W.O. 4LCITR

Scales	Horiz. 1" = 40' Vert. N/A	Sheet RW6 of RW15	Page 306 of 356

Date: 08\31\09

File: C:\PWworking\PHX\dms54831\18V-06.dgn

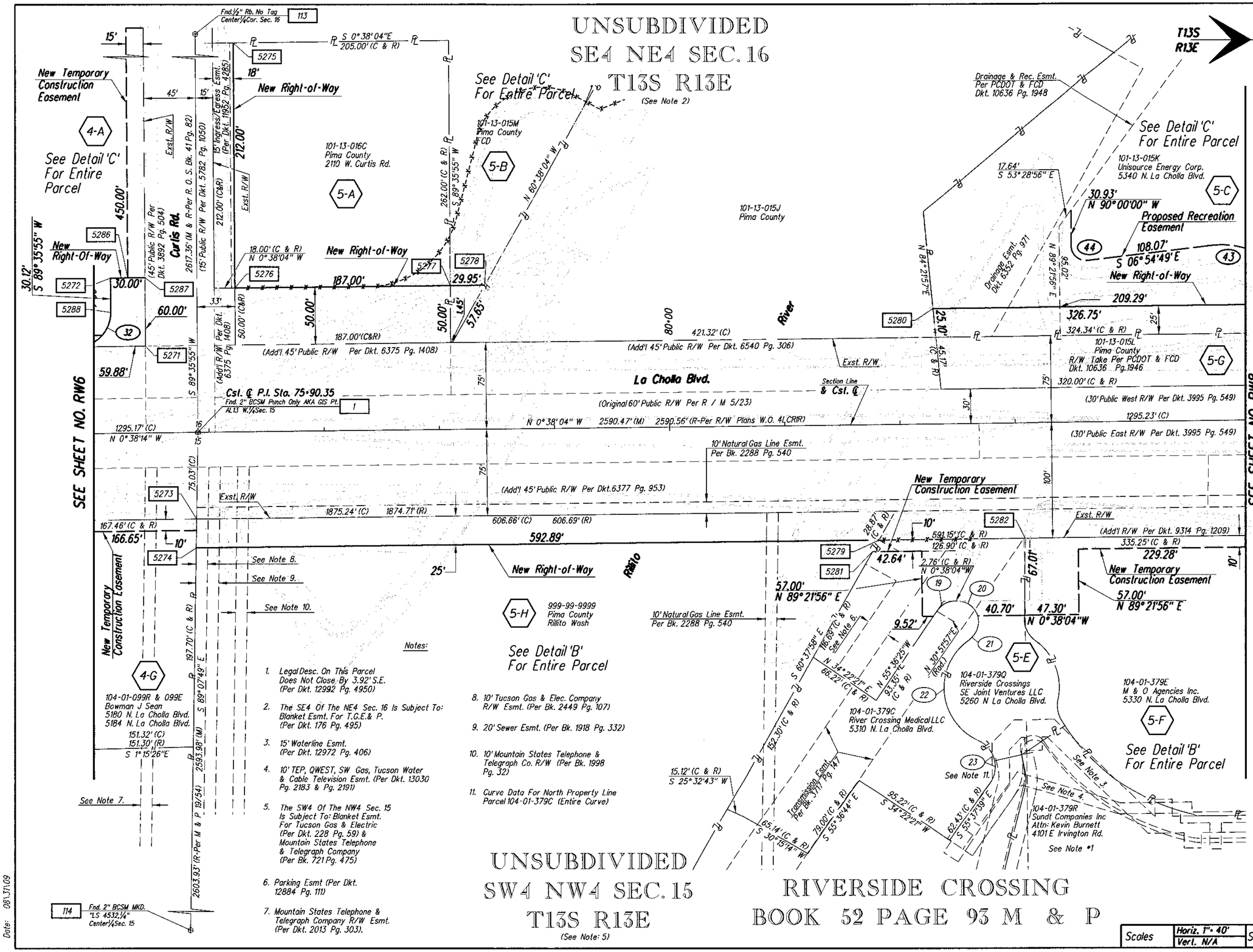

No.	Revision Description	Engineer	Date

		Date
Designed	JTS	10/08
Drawn	JTS	10/08
Checked	FDA	10/08
Proj. Engr.	TWB	10/08

Priscilla S. Cornelio, P.E. Director

ARIZONA LAND SURVEYOR CERTIFICATE NO. 15211 FRANK D. ABELL SIGNED 8.31.09 ARIZONA, U.S.A.

Expires 03-31-2011

HDR Engineering, Inc.
5210 East Williams Circle, Suite 530
Tucson, AZ 85711-4459
(520) 584-3600

Pima County Department of Transportation

RIGHT OF WAY PLANS
LA CHOLLA
RUTHRAUFF RD. TO RIVER RD.
W.O. 4LCITR

Scales	Horiz. 1" = 40'	Sheet RW7 of RW15	Page 307 of 356
	Vert. N/A		

Date: 08\31\09

File: C:\PWworking\PHX\dms54831\18V-07.dgn

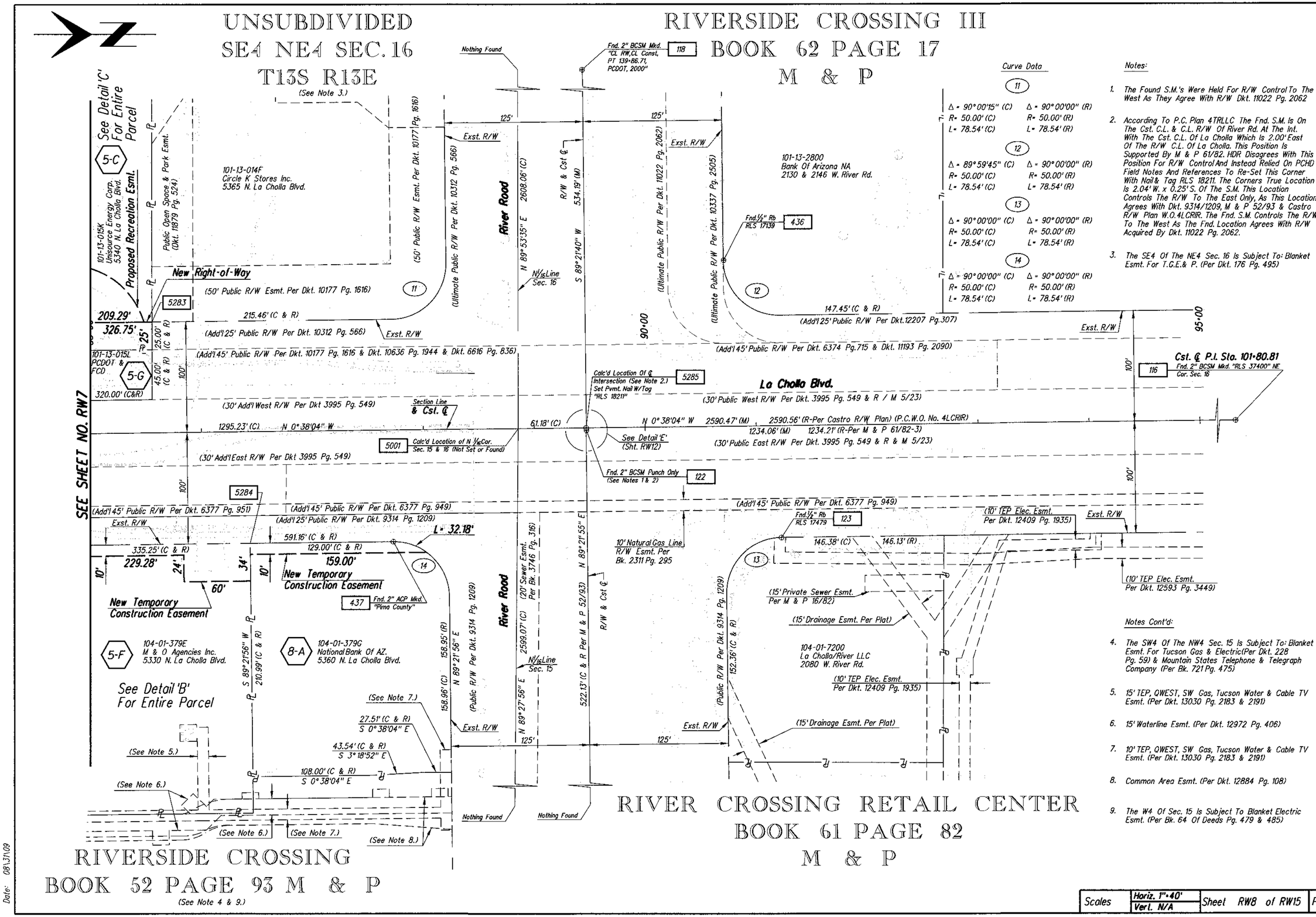

Curve Data

11	Δ = 90°00'15" (C)	Δ = 90°00'00" (R)
	R= 50.00' (C)	R= 50.00' (R)
	L= 78.54' (C)	L= 78.54' (R)
12	Δ = 89°59'45" (C)	Δ = 90°00'00" (R)
	R= 50.00' (C)	R= 50.00' (R)
	L= 78.54' (C)	L= 78.54' (R)
13	Δ = 90°00'00" (C)	Δ = 90°00'00" (R)
	R= 50.00' (C)	R= 50.00' (R)
	L= 78.54' (C)	L= 78.54' (R)
14	Δ = 90°00'00" (C)	Δ = 90°00'00" (R)
	R= 50.00' (C)	R= 50.00' (R)
	L= 78.54' (C)	L= 78.54' (R)

Notes:

1. The Found S.M.'s Were Held For R/W Control To The West As They Agree With R/W Dkt. 11022 Pg. 2062
2. According To P.C. Plan 4TRLLC The Fnd. S.M. Is On The Cst. C.L. & C.L. R/W Of River Rd. At The Int. With The Cst. C.L. Of La Cholla Which Is 2.00' East Of The R/W C.L. Of La Cholla. This Position Is Supported By M & P 61/82. HDR Disagrees With This Position For R/W Control And Instead Relied On PCHD Field Notes And References To Re-Set This Corner With Nail & Tag RLS 18211. The Corners True Location Is 2.04' W. x 0.25' S. Of The S.M. This Location Controls The R/W To The East Only, As This Location Agrees With Dkt. 9314/1209, M & P 52/93 & Castro R/W Plan W.O.4LCRIR. The Fnd. S.M. Controls The R/W To The West As The Fnd. Location Agrees With R/W Acquired By Dkt. 11022 Pg. 2062.
3. The SE4 Of The NE4 Sec. 16 Is Subject To: Blanket Esmt. For T.G.E.& P. (Per Dkt. 176 Pg. 495)

Notes Cont'd:

4. The SW4 Of The NW4 Sec. 15 Is Subject To: Blanket Esmt. For Tucson Gas & Electric(Per Dkt. 228 Pg. 59) & Mountain States Telephone & Telegraph Company (Per Bk. 721 Pg. 475)
5. 15' TEP, QWEST, SW Gas, Tucson Water & Cable TV Esmt. (Per Dkt. 13030 Pg. 2183 & 2191)
6. 15' Waterline Esmt. (Per Dkt. 12972 Pg. 406)
7. 10' TEP, QWEST, SW Gas, Tucson Water & Cable TV Esmt. (Per Dkt. 13030 Pg. 2183 & 2191)
8. Common Area Esmt. (Per Dkt. 12884 Pg. 108)
9. The W4 Of Sec. 15 Is Subject To Blanket Electric Esmt. (Per Bk. 64 Of Deeds Pg. 479 & 485)

No.	Revision Description	Date	Engineer	Designed	JTS	10/08
				Drawn	JTS	10/08
				Checked	FDA	10/08
				Proj. Engr.	TWB	10/08

Priscilla S. Cornelio, P.E. Director

REGISTERED LAND SURVEYOR CERTIFICATE NO. 18211 FRANK O. ABELL ARIZONA, U.S.A. Date Signed 9-31-09 Expires 03-31-2011

HDR Engineering, Inc. 5210 E. Williams Circle, Suite 530 Tucson, AZ 85711-4459 (520) 584-3600

Pima County Department of Transportation

RIGHT OF WAY PLANS
LA CHOLLA
RUTHRAUFF RD. TO RIVER RD.
W.O. 4LCITR

Scales	Horiz. 1"=40' Vert. N/A	Sheet RW8 of RW15	Page 308 of 356

Date: 08\31\09

File: C:\PWworking\PHX\dms54831\18V-08.dgn

LA CHOLLA
BOOK 13 PAGE 41
M & P
(See Note 4.)

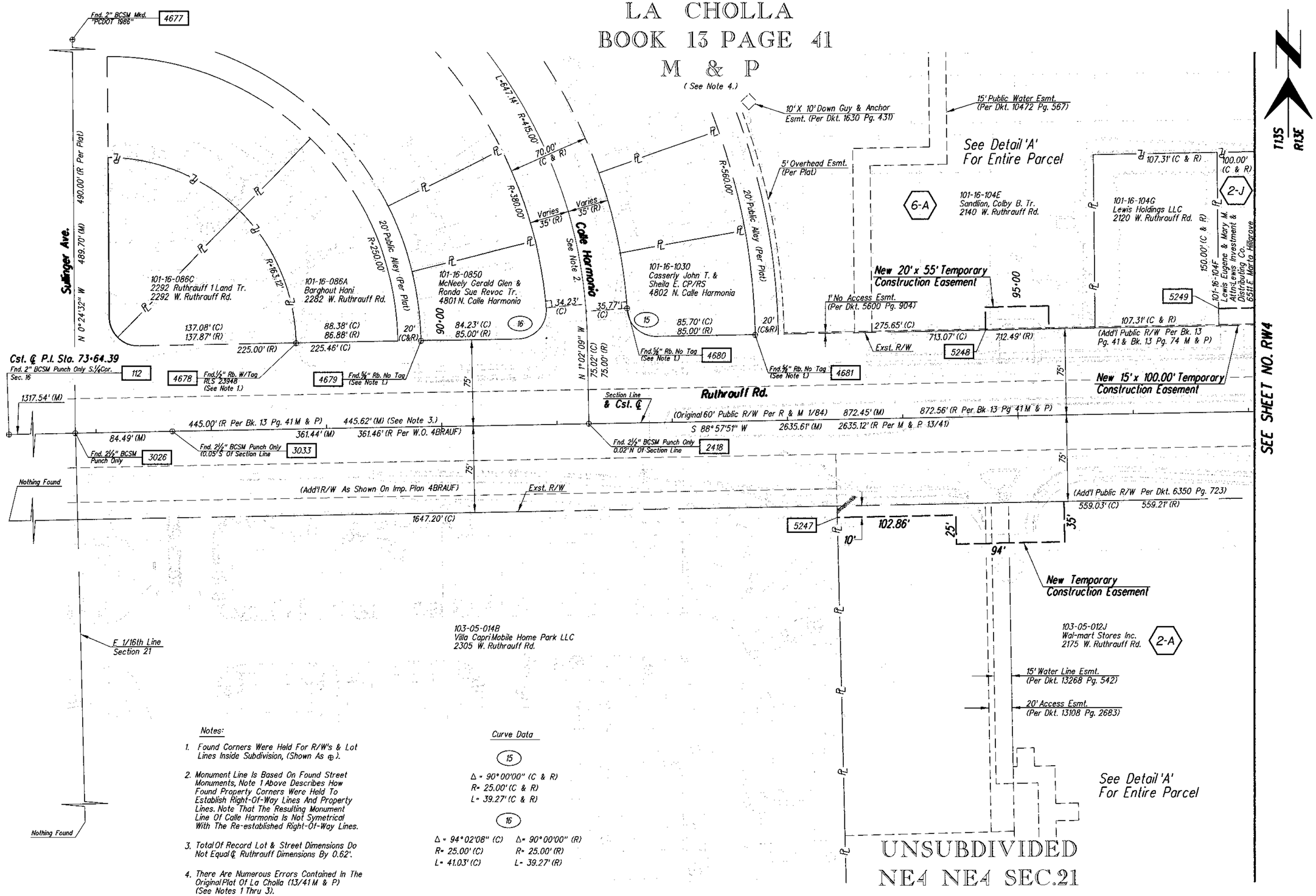

Notes:

1. Found Corners Were Held For R/W's & Lot Lines Inside Subdivision, (Shown As ⊕).
2. Monument Line Is Based On Found Street Monuments, Note 1 Above Describes How Found Property Corners Were Held To Establish Right-Of-Way Lines And Property Lines. Note That The Resulting Monument Line Of Calle Harmonia Is Not Symetrical With The Re-established Right-Of-Way Lines.
3. Total Of Record Lot & Street Dimensions Do Not Equal ℄ Ruthrauff Dimensions By 0.62'.
4. There Are Numerous Errors Contained In The Original Plat Of La Cholla (13/41 M & P) (See Notes 1 Thru 3).

Curve Data

(15)
Δ = 90°00'00" (C & R)
R= 25.00' (C & R)
L= 39.27' (C & R)

(16)
Δ = 94°02'08" (C) Δ= 90°00'00" (R)
R= 25.00' (C) R= 25.00' (R)
L= 41.03' (C) L= 39.27' (R)

No.	Revision Description	Date	Designed	JTS	10/08
			Drawn	JTS	10/08
			Checked	FDA	10/08
			Proj. Engr.	TWB	10/08

Engineer

Priscilla S. Cornelio, P.E. Director

REGISTERED LAND SURVEYOR CERTIFICATE NO. 18211 FRANK D. ABELL ARIZONA, U.S.A. Expires 03-31-2011

HDR Engineering, Inc.
5151 E. Broadway Circle, Suite 530
Tucson, AZ 85711-4459
(520) 384-3600

Pima County Department of Transportation

RIGHT OF WAY PLANS
LA CHOLLA
RUTHRAUFF RD. TO RIVER RD.
W.O. 4LCITR

Scales	Horiz. 1" = 40' Vert. N/A	Sheet RW9 of RW15	Page 309 of 356

Date: 08\31\09

File: C:\PWworking\PHX\dms54831\18V-10.dgn

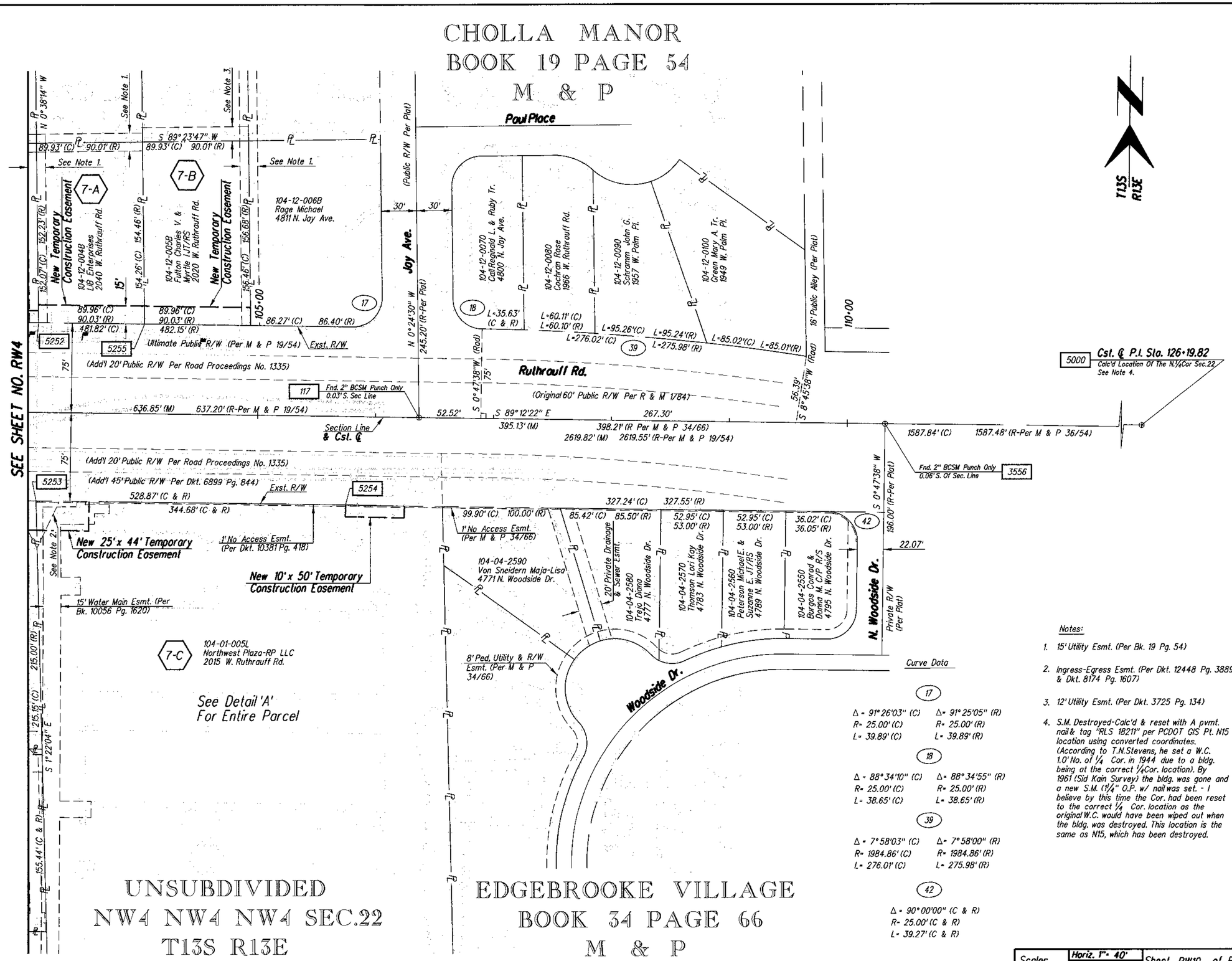

Curve Data

(17)
Δ = 91°26'03" (C) Δ = 91°25'05" (R)
R = 25.00' (C) R = 25.00' (R)
L = 39.89' (C) L = 39.89' (R)

(18)
Δ = 88°34'10" (C) Δ = 88°34'55" (R)
R = 25.00' (C) R = 25.00' (R)
L = 38.65' (C) L = 38.65' (R)

(39)
Δ = 7°58'03" (C) Δ = 7°58'00" (R)
R = 1984.86' (C) R = 1984.86' (R)
L = 276.01' (C) L = 275.98' (R)

(42)
Δ = 90°00'00" (C & R)
R = 25.00' (C & R)
L = 39.27' (C & R)

Notes:

1. 15' Utility Esmt. (Per Bk. 19 Pg. 54)
2. Ingress-Egress Esmt. (Per Dkt. 12448 Pg. 3889 & Dkt. 8174 Pg. 1607)
3. 12' Utility Esmt. (Per Dkt. 3725 Pg. 134)
4. S.M. Destroyed-Calc'd & reset with A pvmt. nail & tag "RLS 18211" per PCDOT GIS Pt. N15 location using converted coordinates. (According to T.N. Stevens, he set a W.C. 1.0' No. of ¼ Cor. in 1944 due to a bldg. being at the correct ¼Cor. location). By 1961 (Sid Kain Survey) the bldg. was gone and a new S.M. (1¼" O.P. w/ nail was set. - I believe by this time the Cor. had been reset to the correct ¼ Cor. location as the original W.C. would have been wiped out when the bldg. was destroyed. This location is the same as N15, which has been destroyed.

Designed	JTS	10/08
Drawn	JTS	10/08
Checked	FDA	10/08
Proj. Engr.	TWB	10/08

No.	Revision Description	Engineer	Date

Priscilla S. Cornelio, P.E. Director

Pima County Department of Transportation

HDR Engineering, Inc.
8210 East Broadway Circle, Suite 530
Tucson, AZ 85711-4459
(520) 584-3600

RESULTS OF SURVEY
LA CHOLLA
RUTHRAUFF RD. TO RIVER RD.
W.O. 4LCITR

Expires 03-31-2011

Scales	Horiz. 1" = 40' Vert. N/A	Sheet RW10 of RW15	Page 310 of 356

Date: 08\31\09

File: C:\PWworking\PHX\dms54831\18V-11.dgn

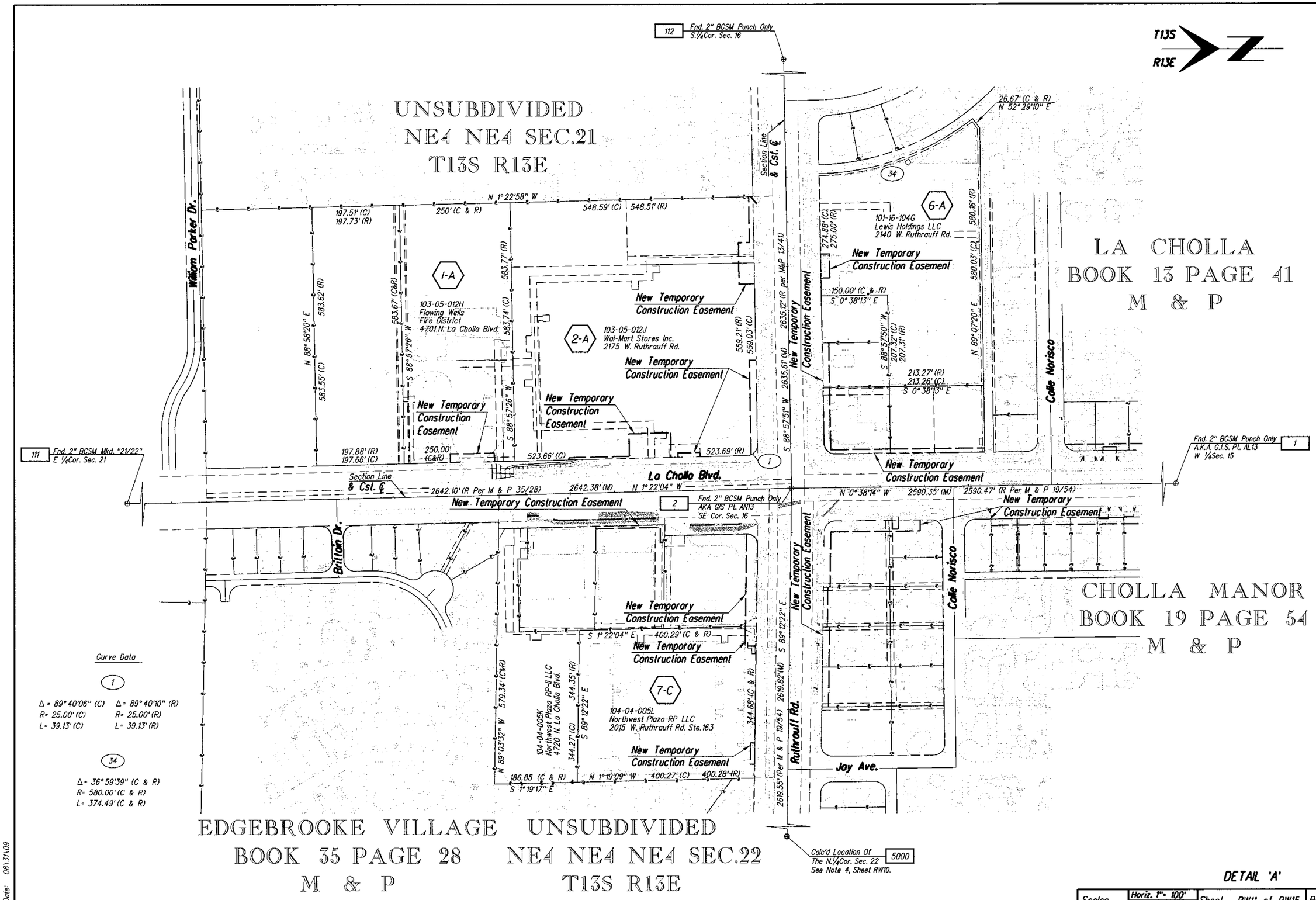

DETAIL 'A'

No.	Revision Description	Date

		Date
Designed	JTS	10/08
Drawn	JTS	10/08
Checked	FDA	10/08
Proj. Engr.	TWB	10/08

Priscilla S. Cornelio, P.E. Director

Pima County Department of Transportation

RIGHT OF WAY PLANS
LA CHOLLA
RUTHRAUFF RD. TO RIVER RD.
W.O. 4LCTR

HDR Engineering, Inc.
5210 E. Williams Circle, Suite 530
Tucson, AZ 85711-4459
(520) 394-3600

REGISTERED LAND SURVEYOR CERTIFICATE NO. 18211 FRANK D. ABELL ARIZONA, U.S.A. Expires 03-31-2011

Scales	Horiz. 1" = 100' Vert. N/A	Sheet RW11 of RW15	Page 311 of 356

Date: 08\31\09

File: C:\PWworking\PHX\dms54831\18V-12.dgn

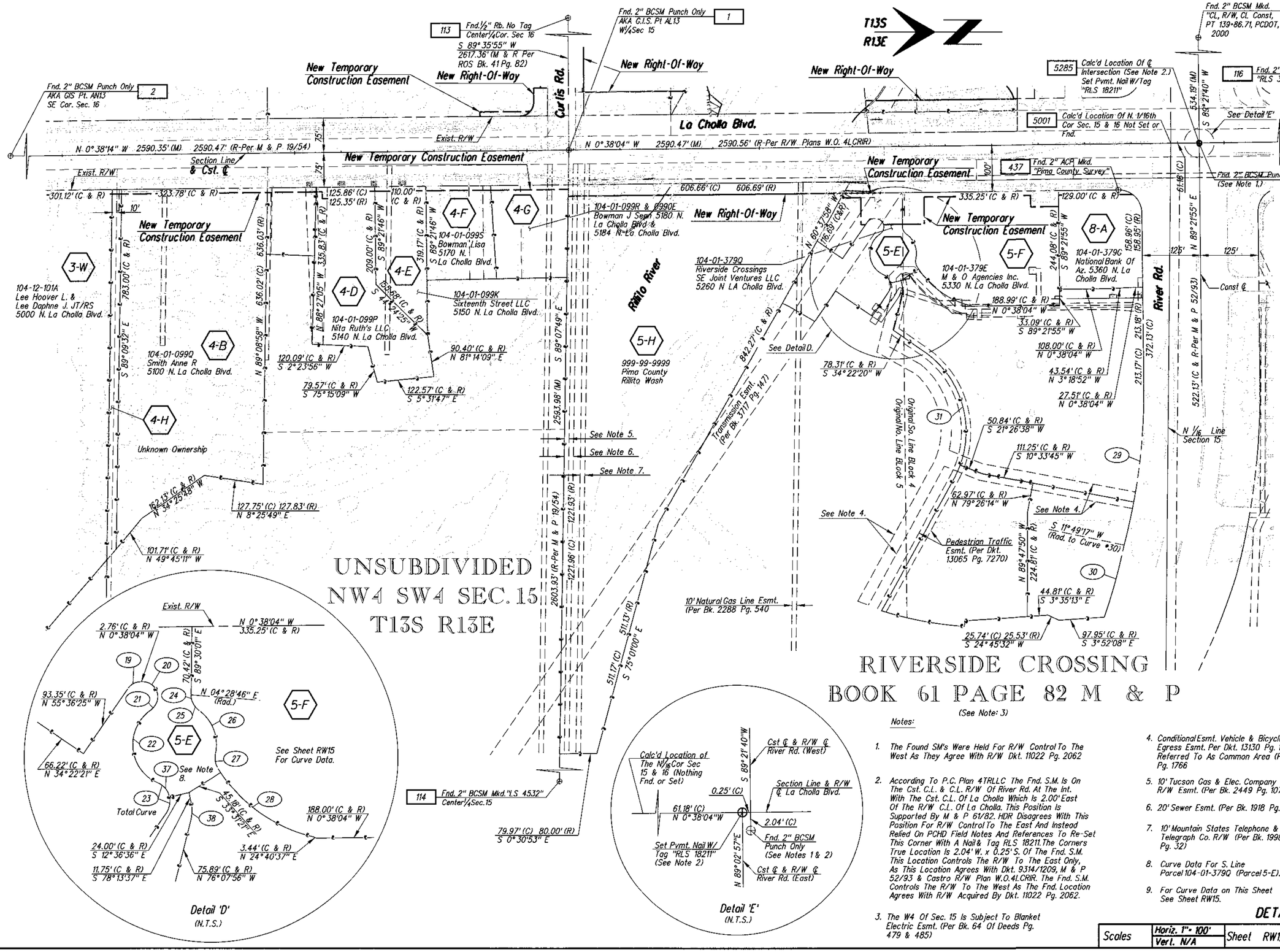

Notes:

1. The Found SM's Were Held For R/W Control To The West As They Agree With R/W Dkt. 11022 Pg. 2062
2. According To P.C. Plan 4TRLLC The Fnd. S.M. Is On The Cst. C.L. & C.L. R/W Of River Rd. At The Int. With The Cst. C.L. Of La Cholla Which Is 2.00' East Of The R/W C.L. Of La Cholla. This Position Is Supported By M & P 61/82. HDR Disagrees With This Position For R/W Control To The East And Instead Relied On PCHD Field Notes And References To Re-Set This Corner With A Nail & Tag RLS 18211. The Corners True Location Is 2.04' W. x 0.25' S. Of The Fnd. S.M. This Location Controls The R/W To The East Only, As This Location Agrees With Dkt. 9314/1209, M & P 52/93 & Castro R/W Plan W.O.4LCRIR. The Fnd. S.M. Controls The R/W To The West As The Fnd. Location Agrees With R/W Acquired By Dkt. 11022 Pg. 2062.
3. The W4 Of Sec. 15 Is Subject To Blanket Electric Esmt. (Per Bk. 64 Of Deeds Pg. 479 & 485)
4. Conditional Esmt. Vehicle & Bicycle Ingress/Egress Esmt. Per Dkt. 13130 Pg. 1766. Also Referred To As Common Area (Per Dkt. 13099 Pg. 1766
5. 10' Tucson Gas & Elec. Company R/W Esmt. (Per Bk. 2449 Pg. 107)
6. 20' Sewer Esmt. (Per Bk. 1918 Pg. 332)
7. 10' Mountain States Telephone & Telegraph Co. R/W (Per Bk. 1998 Pg. 32)
8. Curve Data For S. Line Parcel 104-01-379Q (Parcel 5-E).
9. For Curve Data on This Sheet See Sheet RW15.

No.	Revision Description	Engineer	Date

		Date
Designed	JTS	10/08
Drawn	JTS	10/08
Checked	FDA	10/08
Proj. Engr.	TWB	10/08

REGISTERED LAND SURVEYOR
CERTIFICATE NO.
18211
FRANK D.
ABELL
ARIZONA, U.S.A.
Expires 03-31-2011

HDR Engineering, Inc.
5210 East Williams Circle, Suite 530
Tucson, AZ 85711-4459
(520) 584-3600

Pima County Department of Transportation

Priscilla S. Cornelio, P.E. Director

RIGHT OF WAY PLANS
LA CHOLLA
RUTHRAUFF RD. TO RIVER RD.
W.O. 4LCITR

Scales	Horiz. 1" = 100' Vert. N/A	Sheet RW12 of RW15	Page 312 of 356

Date: 08\31\09

File: C:\PWworking\PHX\dms54831\18V-13.dgn

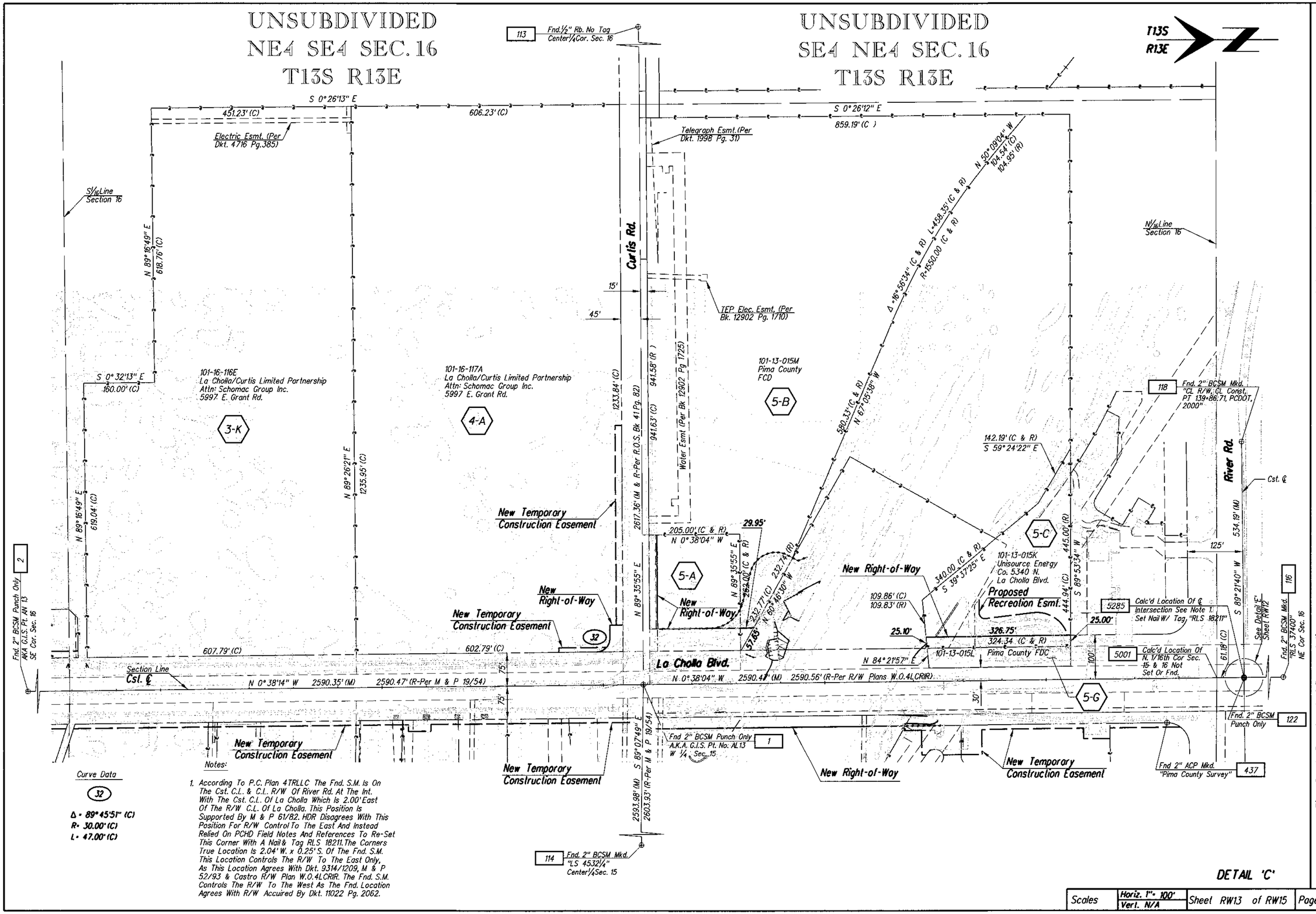

Curve Data

(32)

Δ = 89°45'51" (C)
R = 30.00' (C)
L = 47.00' (C)

Notes:

1. According To P.C. Plan 4TRLLC The Fnd. S.M. Is On The Cst. C.L. & C.L. R/W Of River Rd. At The Int. With The Cst. C.L. Of La Cholla Which Is 2.00' East Of The R/W C.L. Of La Cholla. This Position Is Supported By M & P 61/82. HDR Disagrees With This Position For R/W Control To The East And Instead Relied On PCHD Field Notes And References To Re-Set This Corner With A Nail & Tag RLS 18211. The Corners True Location Is 2.04' W. x 0.25' S. Of The Fnd. S.M. This Location Controls The R/W To The East Only, As This Location Agrees With Dkt. 9314/1209, M & P 52/93 & Castro R/W Plan W.O.4LCRIR. The Fnd. S.M. Controls The R/W To The West As The Fnd. Location Agrees With R/W Accuired By Dkt. 11022 Pg. 2062.

No.	Revision Description	Engineer	Date

		Date
Designed	JTS	10/08
Drawn	JTS	10/08
Checked	FDA	10/08
Proj. Engr.	TWB	10/08

Priscilla S. Cornelio, P.E. Director

Expires 03-31-2011

HDR Engineering, Inc.
5670 E. Broadway Circle, Suite 530
Tucson, AZ 85711-4459
(520) 584-3600

Pima County Department of Transportation

RIGHT OF WAY PLANS
LA CHOLLA
RUTHRAUFF RD. TO RIVER RD.
W.O. 4LCITR

Scales	Horiz. 1" = 100' Vert. N/A	Sheet RW13 of RW15	Page 313 of 356

Date: 08\31\09

File: C:\PWworking\PHX\dms54831\18V-14.dgn

⬡ PARCEL	PIMA CO.TAX ID NO.	OWNERS NAME	GROSS AREA	TAKE (TYPE)	NET AREA
1-A	103-05-012H	Flowing Wells Fire District	141,923 SF	2000 SF (TCE)	141,923 SF
2-A	103-05-012J	Wal-Mart Stores Inc.	320,112 SF	3,084 SF (TCE)	320,112 SF
				4,319 SF (TCE)	
				500 SF (TCE)	
				5,949 SF (TCE)	
2-B	101-16-104B	Ruthrauff Holdings LLC	22,369 SF	3,468 SF (TCE)	22,369 SF
2-C	104-04-005G	GG LLC	36,529 SF	1,273 SF (TCE)	36,529 SF
2-D	104-04-005E	LLC La Cholla/Ruthrauff LLC	43,972 SF	5,094 SF (TCE)	43,986 SF
		Attn: Loma Catalina Co.			
2-E	104-12-0010	Circle K Stores Inc.	22,082 SF	5,412 SF (TCE)	22,082 SF
2-F	104-12-002A	Stephen Schweska	10,065 SF	1,750 SF (TCE)	10,065 SF
2-G	104-12-003A	Elbert H.Clark	13,577 SF	900 SF (TCE)	13,578 SF
2-I	104-12-0550	Gary D.Starr	7,200 SF	900 SF (TCE)	7,200 SF
2-J	101-16-104F	Eugene & Mary M.Lewis	15,001 SF	1,500 SF (TCE)	16,097 SF
2-K	101-16-104K	Merchant Building &	31,958 SF	2,129 SF (TCE)	31,958 SF
		Development LLC			
3-A	104-12-0540	Stephen Schweska	7,200 SF	900 SF (TCE)	7,200 SF
3-B	104-12-0530	Stephen Schweska	7,200 SF	900 SF (TCE)	7,200 SF
3-C	104-12-0520	Robert Bruce Neely	7,200 SF	900 SF (TCE)	7,200 SF
3-D	104-12-0510	O.J.& Lois M.Harvey	7,200 SF	900 SF (TCE)	7,200 SF
3-E	104-12-0500	Catalina & Ann F.Rodriguez	7,200 SF	900 SF (TCE)	7,200 SF
3-F	104-12-0490	David L.Tola	7,200 SF	900 SF (TCE)	7,200 SF
3-G	104-12-0480	Donnie Ray & Doris Kay	7,200 SF	900 SF (TCE)	7,200 SF
		Calhoon			
3-H	104-12-0470	James A.Recer	7,200 SF	900 SF (TCE)	7,200 SF
3-J	101-16-0280	Wayne & Norma E Metz	7,662 SF	937 SF (TCE)	7,662 SF
3-K	101-16-0290	Norman D.Franzen Jr.&	8,250 SF	1,125 SF (TCE)	8,250 SF
		Charlene L.Franzen			
3-L	101-16-0300	Roberto V.& Eva D.Gaona	8,250 SF	1,125 SF (TCE)	8,250 SF
3-M	101-16-0310	Alfonzo G.& Rosa E.Nunez	8,250 SF	1,125 SF (TCE)	8,250 SF
3-N	101-16-0320	Marsha June Jones	8,250 SF	1,125 SF (TCE)	8,250 SF
3-P	101-16-122C	Stuart Title & Trust TR.	7,839 SF	765 SF (TCE)	7,839 SF
3-Q	101-16-033A	Marvin D.& Arlene I Horn	6,765 SF	923 SF (TCE)	6,765 SF
3-R	101-16-034C	William J Erickson	6,753 SF	921 SF (TCE)	6,753 SF
3-S	101-16-034A	Everardo Garcia	6,746 SF	920 SF (TCE)	6,746 SF
3-T	101-16-035A	Edward M.Coury	6,565 SF	923 SF (TCE)	6,565 SF
3-V	104-12-0450	Keith Margaret &	8,619 SF	1,102 SF (TCE)	8,619 SF
		Keith Robert D.			
3-W	104-12-101A	Lee Hoover L.& Lee Daphne J.	430,958 SF	3,027 SF (TCE)	430,958 SF
4-A	101-16-117A	La Cholla/Curtis	746,504 SF	1,991 SF (R/W)	744,513 SF
		Limited Partnership		1,011 SF (TCE)	
				6,750 SF (TCE)	
4-B	104-01-100A	Wayne & Margaret Hallquist	207,094 SF	3,138 SF (TCE)	207,094 SF
4-C	104-01-099Q	Anne R.Smith	14,965 SF	1,049 SF (TCE)	14,965 SF
4-D	104-01-099P	Nita Ruth's LLC	62,704 SF	2,025 SF (TCE)	62,704 SF
4-E	104-01-099K	Sixteenth Street LLC	29,049 SF	1,100 SF (TCE)	29,049 SF

⬡ PARCEL	PIMA CO.TAX ID NO.	OWNERS NAME	GROSS AREA	TAKE (TYPE)	NET AREA
4-F	104-01-099S	Lisa Bowman	28,943 SF	1,394 SF (TCE)	28,943 SF
4-G	104-01-099R &	Sean J.Bowman	31,633 SF	1,671 SF (TCE)	31,633 SF
	104-01-099E				
4-H	No Parcel ID No.	Pima Co.	7,770 SF	100 SF (TCE)	7,770 SF
4-I	No Parcel ID No.	Unknown Ownership	7,888 SF	100 SF (TCE)	7,888 SF
5-A	101-13-016C	Pima County	52,811 SF	13,165 SF (R/W)	39,646 SF
5-B	101-13-015M	Pima County	553,463 SF	785 SF (R/W)	552,674 SF
5-C	101-13-015K	Unisource Energy Corp.	84,070 SF	8,138 SF (R/W)	75,934 SF
				9,436 SF (ESMT)	
5-E	104-01-379Q	Riverside Crossings SE	22,950 SF	6,002 SF (TCE)	22,950 SF
		Joint Ventures LLC			
5-F	104-01-379E	M & O Agencies Inc.	74,010 SF	7,449 SF (TCE)	74,010 SF
5-G	101-13-015I	Pima County	14,497 SF	14,497 SF (R/W)	0 SF
5-H	999-99-9999	Pima County	365,950 SF	14,994 SF (R/W)	350,956 SF
6-A	101-16-104E	Colby B.Sandlian	159,500 SF	1,100 SF (TCE)	159,275 SF
7-A	104-12-004B	LIB Enterprises	13,774 SF	1,349 SF (TCE)	13,774 SF
7-B	104-12-005B	Charles V.& Mytrle I.Fulton	13,974 SF	1,349 SF (TCE)	13,974 SF
7-C	104-01-005L	Northwest Plaza - RP LLC	137,805 SF	500 SF (TCE)	137,805 SF
				1,112 SF (TCE)	
8-A	104-01-379G	National Bank Of Arizona	37,131 SF	1,494 SF (TCE)	37,131 SF

AREA TABLE

No.	Revision Description	Engineer	Date

		Date
Designed	JTS	10/08
Drawn	JTS	10/08
Checked	FDA	10/08
Proj. Engr.	TWB	10/08

Priscilla S. Cornelio, P.E. Director

REGISTERED LAND SURVEYOR CERTIFICATE NO. 18211 FRANK D. ABELL DATE SIGNED 8-31-09 ARIZONA, U.S.A.

Expires 03-31-2011

HDR Engineering, Inc.
5210 East Williams Circle, Suite 530
Tucson, AZ 85711-4459
(520) 584-3600

Pima County Department of Transportation

RIGHT OF WAY PLANS
LA CHOLLA
RUTHRAUFF RD. TO RIVER RD.
W.O. 4LCITR

Scales	Horiz. 1" = N/A Vert. N/A	Sheet RW14 of RW15	Page 314 of 356

Date: 08\31\09

File: C:\PWworking\PHX\dms54831\18V-15.dgn

Station & Offset Per La Cholla Construction Centerline

POINT NO.	Northing	Easting	Station	Offset	Description
1	474643.6440	979607.7720	75+90.35	0.00	E. 1/4 Sec. 16.
2	472053.4590	979636.5790	50+00.00	0.00	S.E. Cor. Sec. 16.
3	477242.5390	976980.2760	NA	NA	N. 1/4 Cor. Sec. 16.
111	469411.8320	979699.6470	23+57.62	0.00	E. 1/4 Cor. Sec. 21
113	474625.3150	976990.4790	NA	NA	Center 1/4 Cor. Sec.16.
114	474604.2740	982201.4540	NA	NA	Center 1/4 Cor. Sec. 15.
115	477224.8290	982183.3060	NA	NA	N. 1/4 Cor. Sec.15.
116	477233.9520	979579.0830	101+80.81	0.00	N. E. Cor. Sec. 16.
118	475994.2910	979060.6300	89+46.97	532.15 L	
119	473108.6500	979970.8130	60+51.41	345.95 R	
120	472630.9780	978972.0490	55+84.87	658.07 L	
121	472421.4900	979978.3060	53+64.21	345.80 R	
122	476000.2470	979594.7860	89+47.01	2.04 R	
123	476176.0230	979690.8920	91+21.71	100.09 R	
124	473222.0950	979715.6380	61+67.68	92.05 R	
125	472667.9410	979444.6750	56+16.58	185.06 L	
127	473387.5940	979546.6950	63+35.05	75.04 L	
436	476123.8490	979441.3210	90+72.30	150.05 L	
437	475826.1200	979694.7280	87+71.79	100.05 R	
683	471102.4060	979836.2930	40+44.45	176.96 R	
684	471030.0290	979838.0830	39+72.05	177.02 R	
685	470773.6440	979844.3210	37+15.59	177.14 R	
686	471228.8820	979884.7800	41+69.73	228.45 R	
687	471247.6480	979864.8830	41+88.97	209.01 R	
688	471025.7790	979661.1180	39+72.03	0.00	
689	469350.2360	982311.3280	NA	NA	Center 1/4 Cor. Sec. 22.
690	469353.6420	982311.1830	NA	NA	2" BCSM Punch Only
691	469364.9970	977067.2460	NA	NA	Center 1/4 Cor. Sec. 21.
2499	471575.6866	979572.9643	45+23.88	75.00 L	
3484	471611.9024	979722.1424	45+56.53	75.00 R	
3485	471767.2982	979718.4324	47+11.97	75.00 R	
3486	471952.0295	979739.0469	48+96.15	100.02 R	
3487	471962.0906	979561.7088	49+10.44	77.03 L	
3488	472277.0946	979559.0872	52+24.48	75.00 L	
3489	472273.6493	979709.1348	52+19.37	75.00 R	
3490	472343.6450	979708.3563	52+89.37	75.00 R	
3491	472417.8465	979632.5264	53+64.41	0.00	
3492	472445.8744	979722.2203	53+91.44	90.00 R	
3493	472489.9304	979556.7201	54+37.33	75.00 L	
3494	472503.6190	979706.5771	54+49.35	75.00 R	
3495	472563.6188	979705.9098	55+09.36	75.00 R	
3496	472623.6187	979705.2426	55+69.36	75.00 R	
3497	472641.0127	979630.0445	55+87.59	0.00	
3498	472671.6846	979539.6978	56+19.26	90.00 L	
3499	472683.6186	979704.5753	56+29.36	75.00 R	
4683	472487.7490	979406.7670	54+36.82	224.97 L	
5001	475938.7980	979593.4280	88+85.57	0.00	
5230	472740.7251	979553.9309	56+88.14	75.00 L	
5231	472743.6185	979703.9080	56+89.37	75.00 R	
5232	472803.6184	979703.2407	57+49.37	75.00 R	
5233	472815.7204	979553.0968	57+63.14	75.00 L	
5234	472863.6183	979702.5734	58+09.38	75.00 R	
5235	473121.7015	979549.6938	60+69.14	75.00 L	
5236	472923.6182	979701.9061	58+69.38	75.00 R	
5237	472965.7112	979551.4287	59+13.14	75.00 L	
5238	472983.6181	979701.2388	59+29.38	75.00 R	
5239	473040.7065	979550.5946	59+88.14	75.00 L	
5240	473043.6180	979700.5715	59+89.39	75.00 R	
5241	473070.7047	979550.2610	60+18.14	75.00 L	
5242	473152.5925	979714.3604	60+98.20	90.00 R	
5243	473183.1977	979549.0099	61+30.64	75.00 L	
5244	473219.9169	979623.6061	61+66.53	0.00	
5255	473225.5501	979708.5487	61+71.22	85.00 R	
5256	473244.5869	979548.3271	61+92.04	75.00 L	
5257	473305.9106	979547.6451	62+53.36	75.00 L	
5258	473343.3316	979697.2382	62+89.12	75.00 R	
5259	473360.1175	979697.0515	63+05.91	75.00 R	
5260	473387.6071	979546.7365	63+35.06	75.00 L	
5261	473661.2206	979693.7028	66+07.03	75.00 R	
5262	473681.2101	979694.5670	66+27.01	76.09 R	
5263	473994.9854	979689.9908	69+40.81	75.00 R	
5264	474452.6139	979534.8919	74+00.14	75.00 L	
5265	474099.9489	979688.8234	70+45.78	75.00 R	
5266	474100.0768	979688.8223	70+45.91	75.00 R	

Station & Offset Per La Cholla Construction Centerline

POINT NO.	Northing	Easting	Station	Offset
5267	474225.9264	979687.4223	71+71.77	75.00 R
5268	474335.9172	979686.1991	72+81.77	75.00 R
5269	474475.0557	979684.6516	74+20.91	75.00 R
5270	474538.2479	979533.9395	74+85.78	75.00 L
5271	474598.1212	979533.2736	75+45.65	75.00 L
5272	474567.7026	979473.6082	75+15.90	135.00 L
5273	474642.5053	979682.7893	75+88.37	75.00 R
5274	474642.1257	979707.7949	75+87.71	100.00 R
5275	474674.2823	979270.4120	76+24.72	337.00 L
5276	474675.7669	979482.4086	76+23.85	125.00 L
5277	474862.7570	979480.3375	78+10.86	125.00 L
5278	474892.7086	979480.0058	78+40.81	125.00 L
5279	475234.9747	979701.2288	81+80.60	100.00 R
5280	475281.9340	979500.6983	82+29.78	100.00 L
5281	475229.3119	979711.2922	81+74.83	110.00 R
5282	475361.8669	979699.8234	83+07.50	100.00 R
5283	475608.6666	979497.0796	85+56.53	100.00 L
5284	475697.0940	979696.1106	86+42.75	100.00 R
5285	475999.9702	979592.7500	89+46.75	0.00
5286	474582.7018	979473.4414	75+30.90	135.00 L
5287	474597.7010	979473.2746	75+45.90	135.00 L
5288	474567.9136	979503.7313	75+15.78	104.88 L

Station & Offset Per Ruthrauff Construction Centerline

POINT NO.	Northing	Easting	Station	Offset	Description
112	472005.8120	977001.403	73+64.39	0.00	S. 1/4 Cor. Sec. 16
117	472044.6020	980273.371	106+36.85	0.03 R	
2418	472037.7030	978764.275	91+27.55	0.02 L	
3026	472029.6200	978318.725	86+81.93	0.01 R	
3033	472031.1010	978402.897	87+66.12	0.05 R	
3556	472039.1040	980668.467	110+31.99	0.06 R	
4677	472519.3120	978315.2290	86+87.29	489.66 L	
4678	472107.8050	978510.245	88+74.83	74.70 L	
4679	472109.7970	978618.642	89+83.25	74.73 L	
4680	472138.1360	978797.454	91+62.54	99.83 L	
4681	472115.0410	978908.587	92+73.24	74.73 L	
4682	472464.0050	978804.1790	91+75.16	425.53 L	
5000	472017.1600	982256.1500	126+19.82	0.00	N. 1/4 Cor. Sec 22
5247	471956.5704	978979.8363	93+41.61	85.00 R	
5248	472118.9234	979108.5207	94+73.21	75.00 L	
5249	472137.5800	979310.6207	96+75.62	90.00 L	
5250	471973.2555	979349.4724	97+11.49	75.00 R	
5251	472125.3593	979860.7932	102+23.20	75.00 L	
5252	472124.1129	979950.7413	103+13.15	75.00 L	
5253	471974.1287	979948.5613	103+13.05	75.00 R	
5254	471970.4923	980210.9846	105+75.50	75.00 R	
5255	472122.8665	980040.6893	104+03.11	75.00 L	

Curve Data For Sheet RW12

(19)
Δ = 58°29'59" (C & R)
R= 18.00' (C & R)
L= 18.38' (C & R)

(20)
Δ = 123°54'18" (C & R)
R= 18.00' (C & R)
L= 38.93' (C & R)

(21)
Δ = 20°53'49" (C & R)
R= 25.00' (C & R)
L= 9.12' (C & R)

(22)
Δ = 120°05'12" (C & R)
R= 50.00' (C & R)
L= 104.80' (C & R)

(24)
Δ = 27°50'28" (C & R)
R= 18.00' (C & R)
L= 8.75' (C & R)

(25)
Δ = 30°30'50" (C & R)
R= 25.00' (C & R)
L= 13.31' (C & R)

(26)
Δ = 65°59'49" (C & R)
R= 50.00' (C & R)
L= 57.59' (C & R)

(27)
Δ = 43°57'32" (C & R)
R= 25.00' (C & R)
L= 19.18' (C & R)

(28)
Δ = 44°39'53" (C & R)
R= 185.34' (C & R)
L= 144.48' (C & R)

(29)
Δ = 15°27'53" (C & R)
R= 1275.00' (C & R)
L= 344.14' (C & R)

(30)
Δ = 7°05'32" (C & R)
R= 1298.17' (C & R)
L= 160.69' (C & R)

(31)
Δ = 75°39'34" (C & R)
R= 210.00' (C & R)
L= 277.31' (C & R)

(37)
Curve Data For S. Property Line Parcel 104-01-379Q
Δ = 54°07'42" (C & R)
R= 25.00' (C & R)
L= 23.62' (C & R)

(38)
Δ = 25°38'26" (C & R)
R= 50.00' (C & R)
L= 22.38' (C & R)

Note:

NA Represents Non Applicable Monumentation Located Well Beyond The Construction Limits. (One Half Mile Or More).

COORDINATE TABLE

No.	Revision Description	Date

		Date
Designed	JTS	10/08
Drawn	JTS	10/08
Checked	FDA	10/08
Proj. Engr.	TWB	10/08

Engineer

REGISTERED LAND SURVEYOR CERTIFICATE NO. 18221 FRANK D. ABELL Date Signed 8-24-09 ARIZONA, U.S.A.
Expires 03-31-2011

HDR Engineering, Inc.
5670 Greenwood Plaza Circle, Suite 530
Tucson, AZ 85711-4459
(520) 584-3600

Pima County Department of Transportation
Priscilla S. Cornelio, P.E. Director

RIGHT OF WAY PLANS
LA CHOLLA
RUTHRAUFF RD. TO RIVER RD.
W.O. 4LCITR

Scales	Horiz. 1" = N/A Vert. N/A	Sheet RW15 of RW15	Page 315 of 356

Date: 08\31\09

File: C:\PWworking\PHX\dms54831\18V-09.dgn

LA CHOLLA BLVD. CROSS SECTIONS

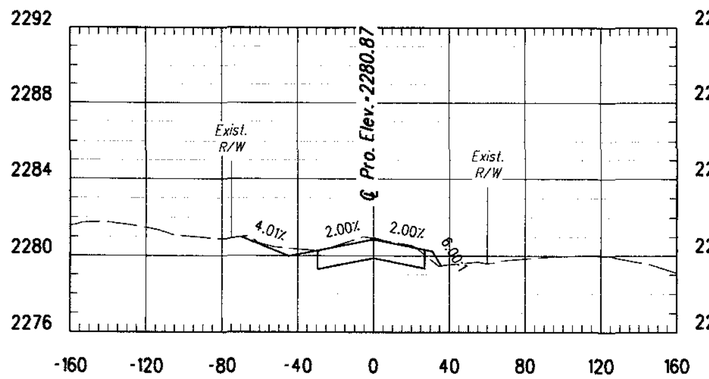

40+87

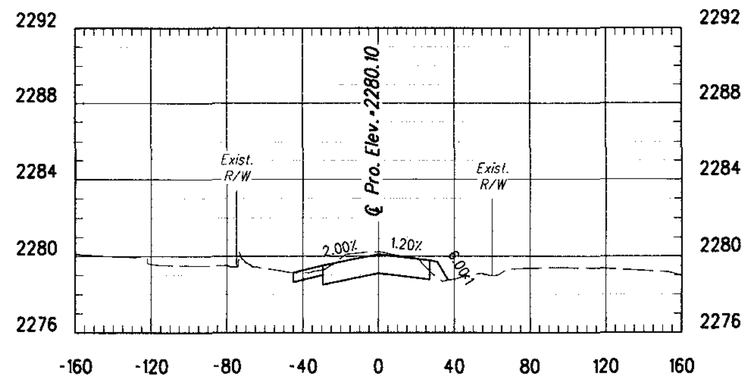

41+40

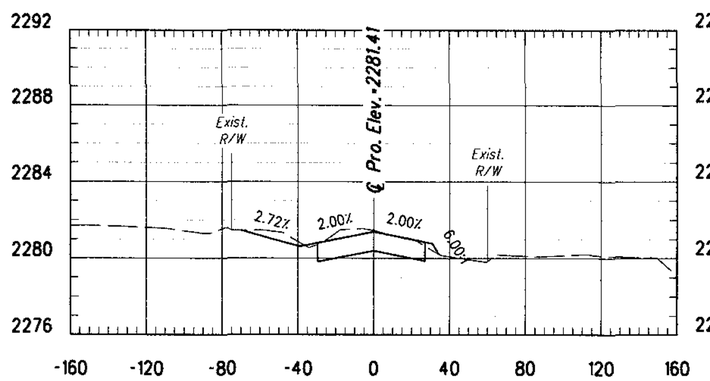

40+50

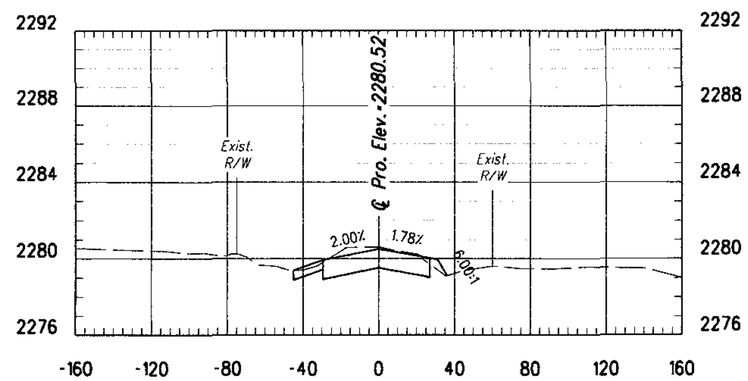

41+11

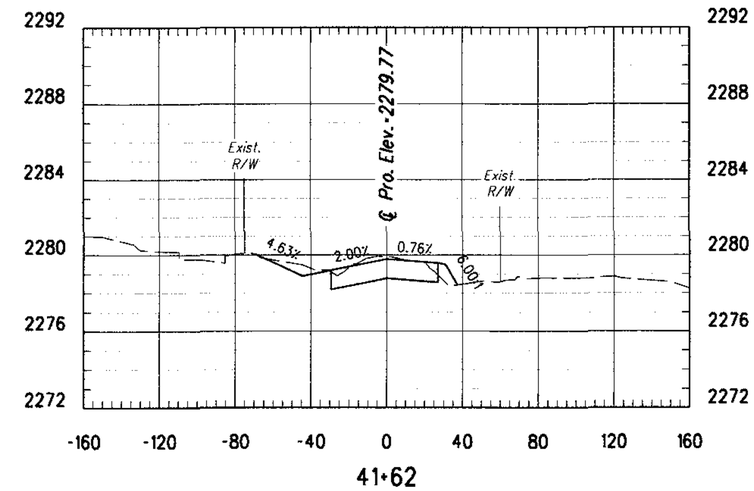

41+62

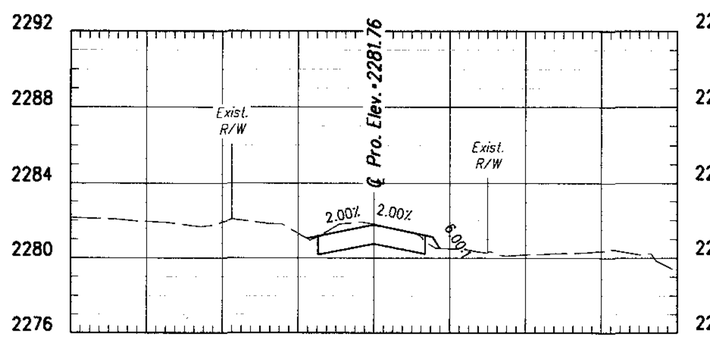

40+25

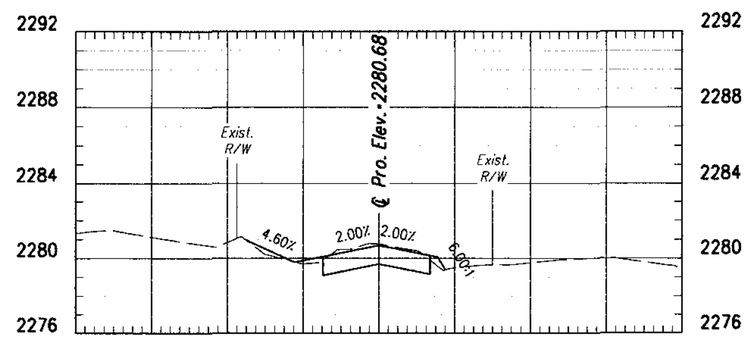

41+00

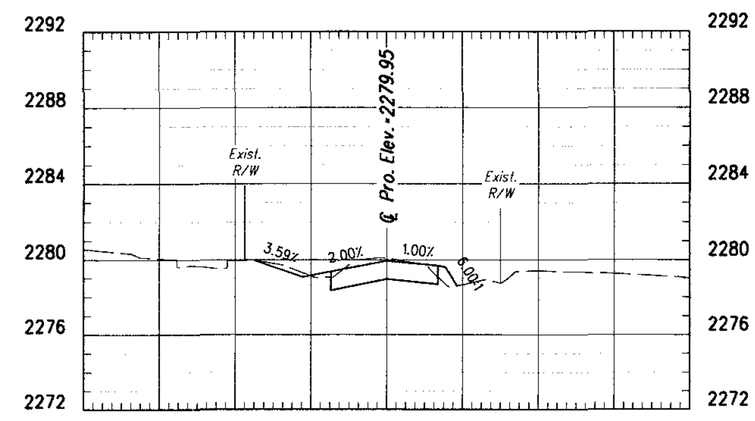

41+50

Sta 40+25 to Sta 41+62

40 0 40 80

Scales	Horiz. 1"=40' Vert. 1"=4'	Sheet XS1 of XS41 Page 316 of 356

LA CHOLLA BLVD. CROSS SECTIONS

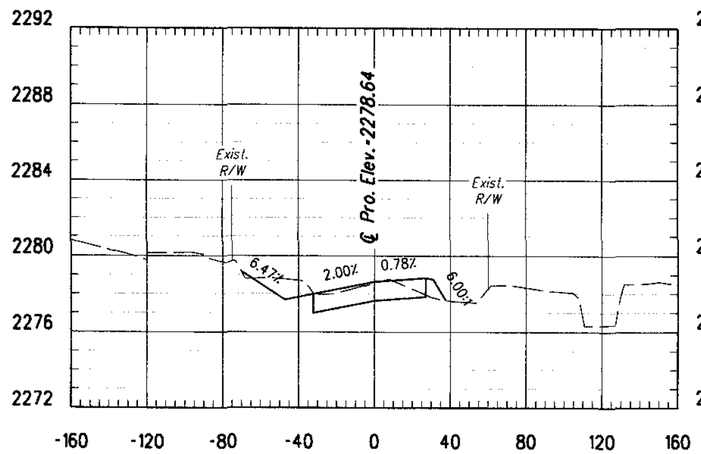

42+39

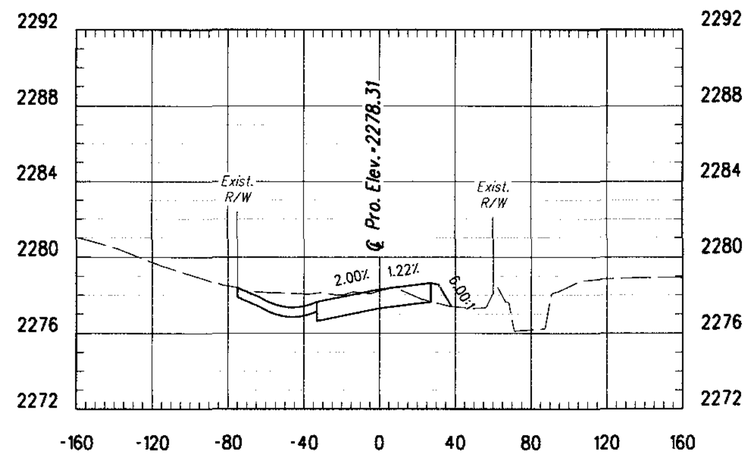

42+61

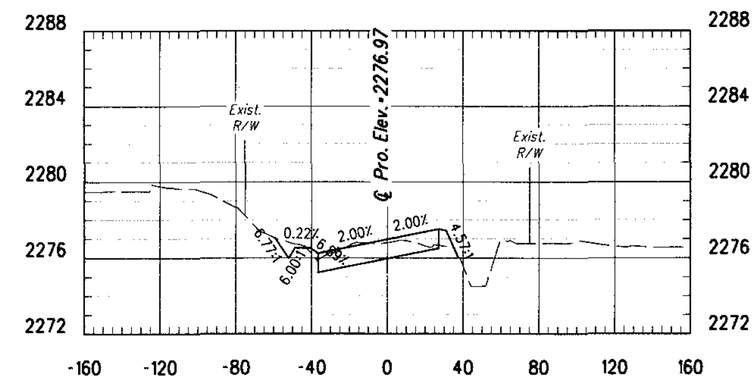

43+50

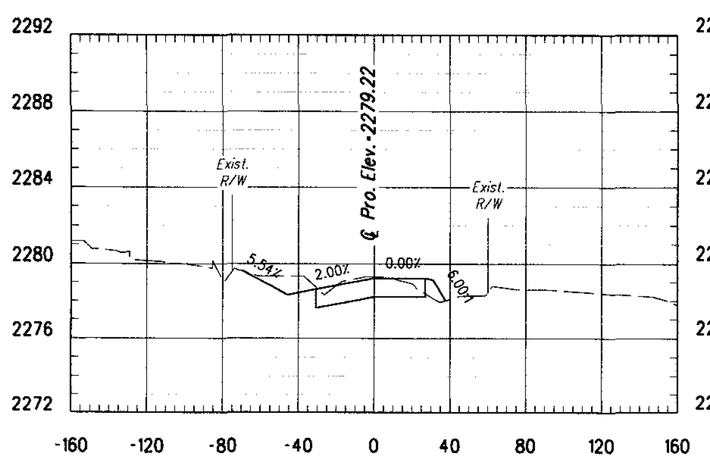

42+00

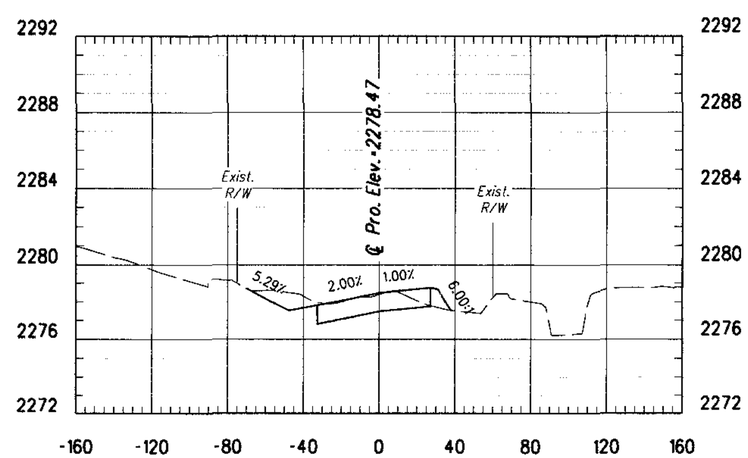

42+50

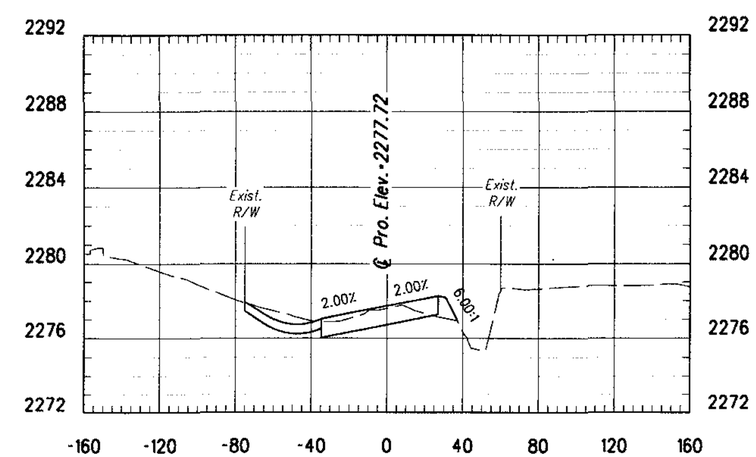

43+00

Sta 42+00 to Sta 43+50

40 0 40 80

Scales	Horiz. 1"=40' Vert. 1"=4'	Sheet XS2 of XS41 Page 317 of 356

LA CHOLLA BLVD. CROSS SECTIONS

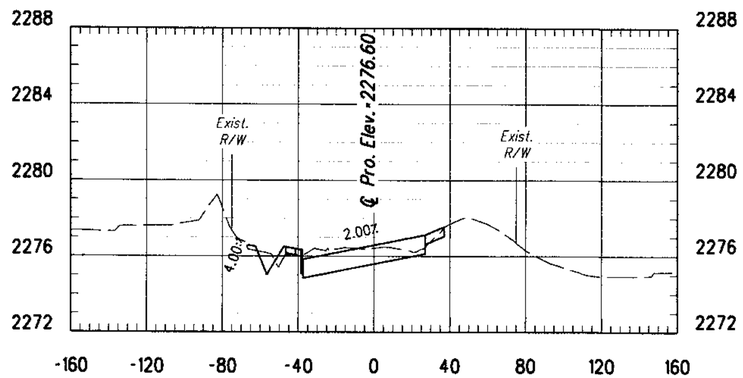

43+75

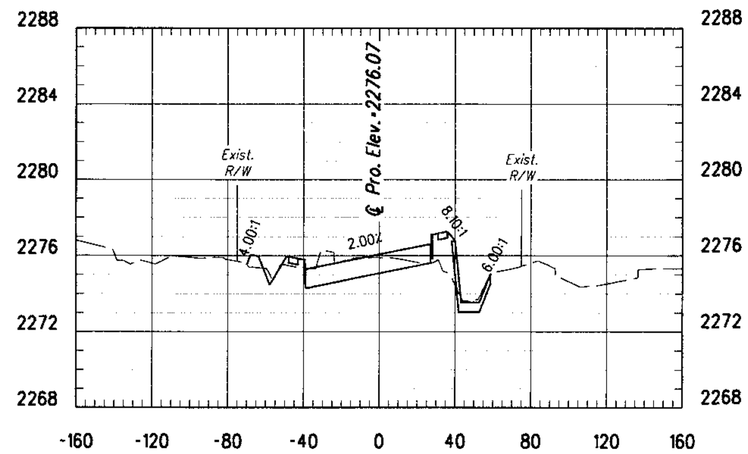

44+10

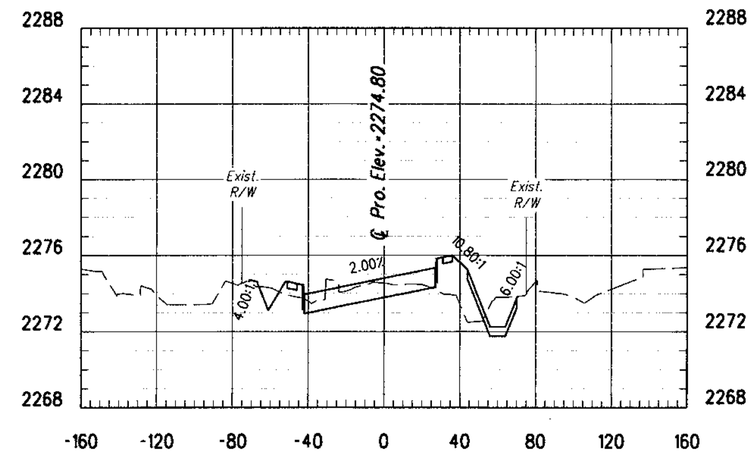

44+95

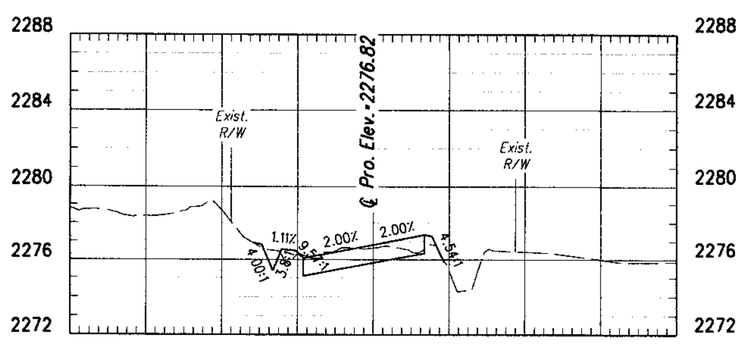

43+60

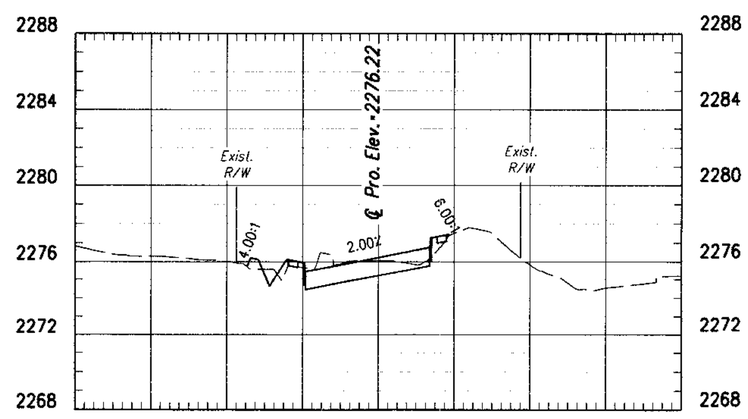

44+00

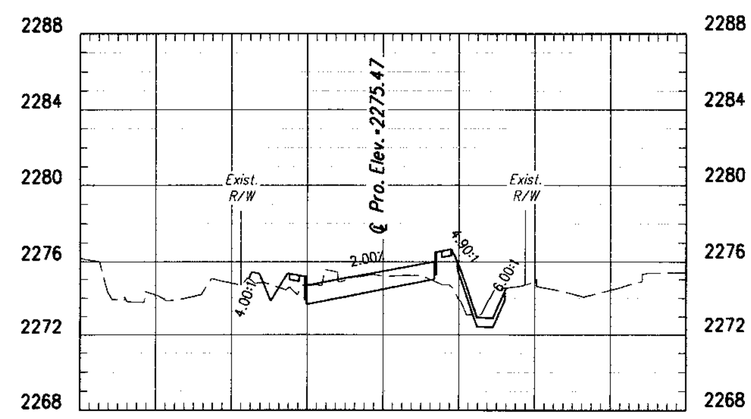

44+50

40 0 40 80

Sta 43+60 to Sta 44+95

Scales	Horiz. 1"=40' Vert. 1"=4'	Sheet XS3 of XS41 Page 318 of 356

012145
00000000000059914
Pima_County_Dept_of_Transportation\PCDOT-La_Cholla_Blvd-Ruthrauff\13.00_CAD\Construction_Documents\Civil\26C-01.dgn

08\20\09 5:07:43 PM aledesma

Project # 4LCITR

LA CHOLLA BLVD. CROSS SECTIONS

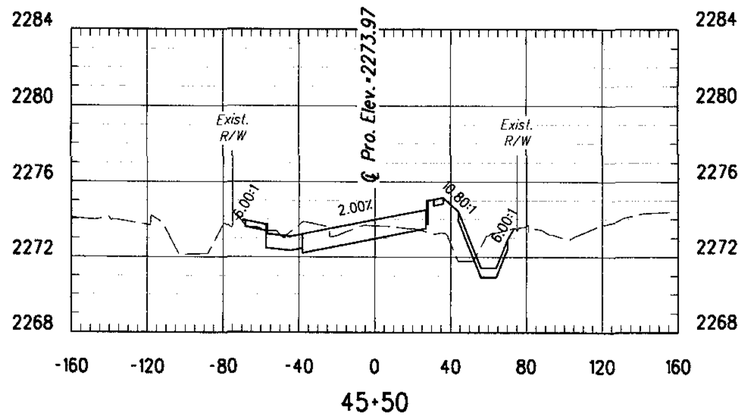

45+50

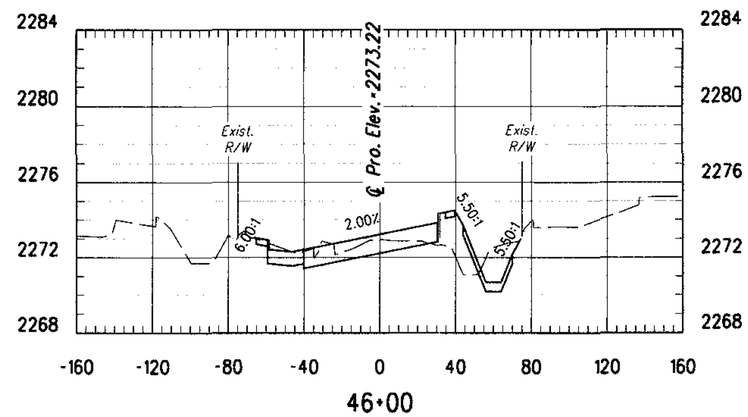

46+00

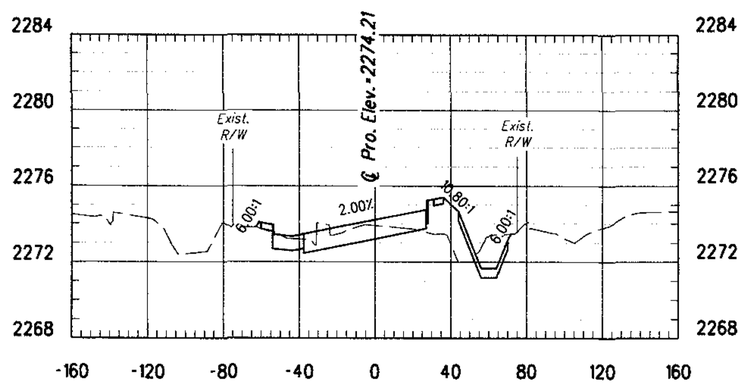

45+34

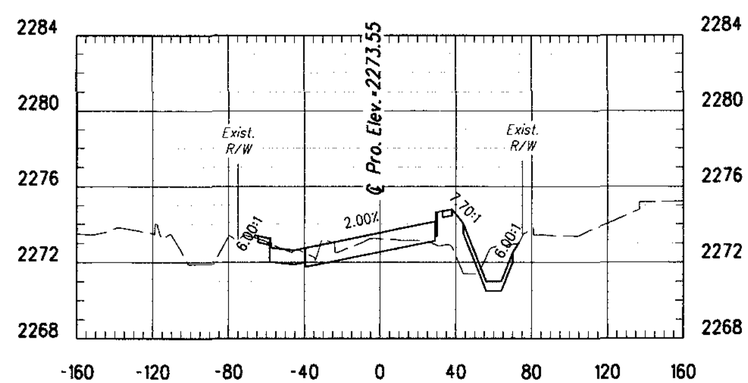

45+78

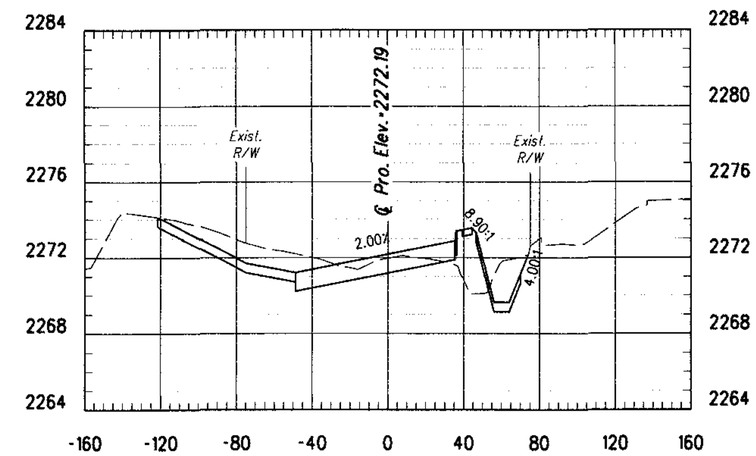

46+69

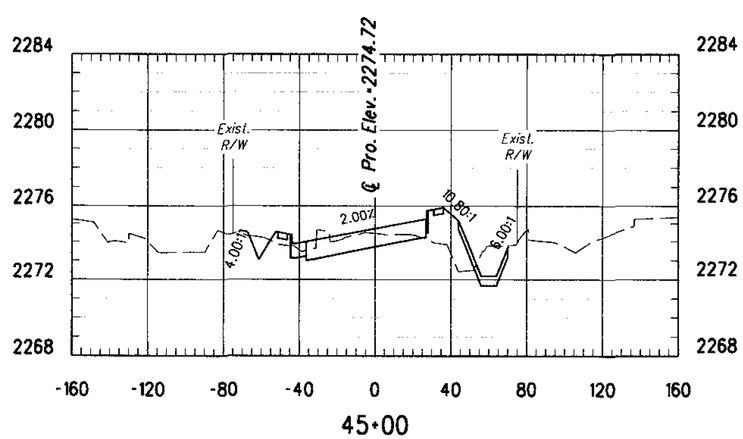

45+00

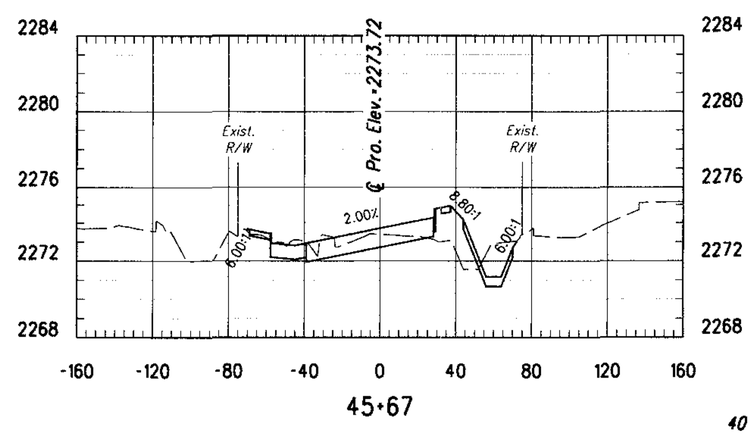

45+67

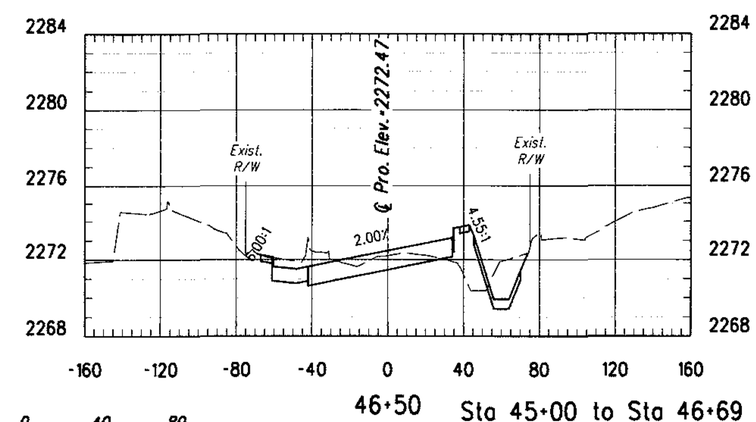

46+50

Sta 45+00 to Sta 46+69

40 0 40 80

Scales	Horiz. 1"=40'	Sheet XS4 of XS41 Page 319 of 356
	Vert. 1"=4'	

012145
0000000005914
Pima_County_Dept_of_Transportation\PC001-La_Cholla_Blvd-Ruthrauff\13.00_CAD\Construction_Documents\Civil\26C-01.dgn

08\20\09 5:07:44 PM aledesma

Project • 4LCITR

LA CHOLLA BLVD. CROSS SECTIONS

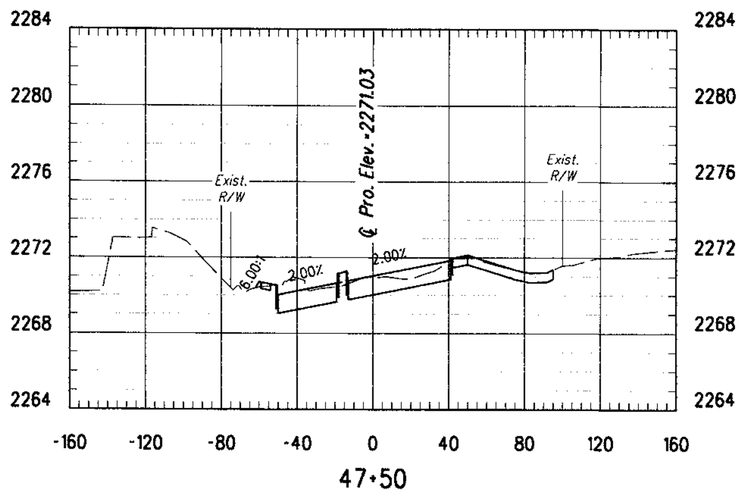

47+50

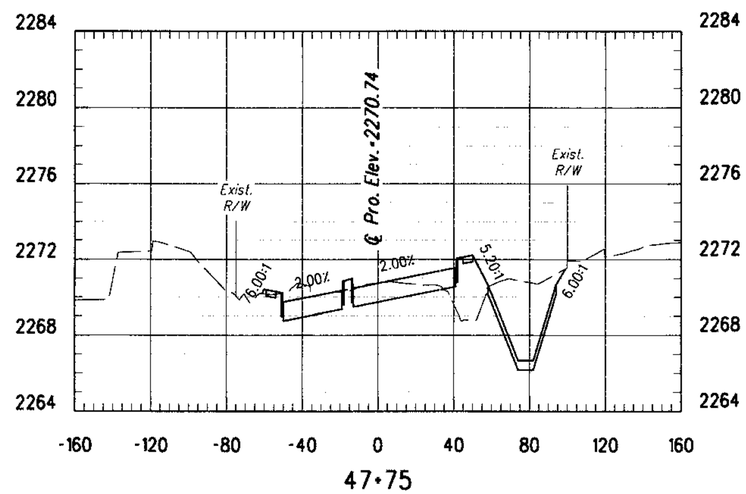

47+75

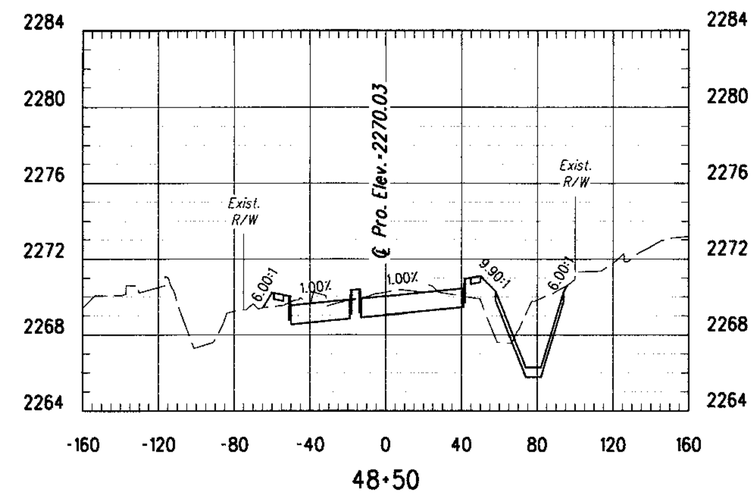

48+50

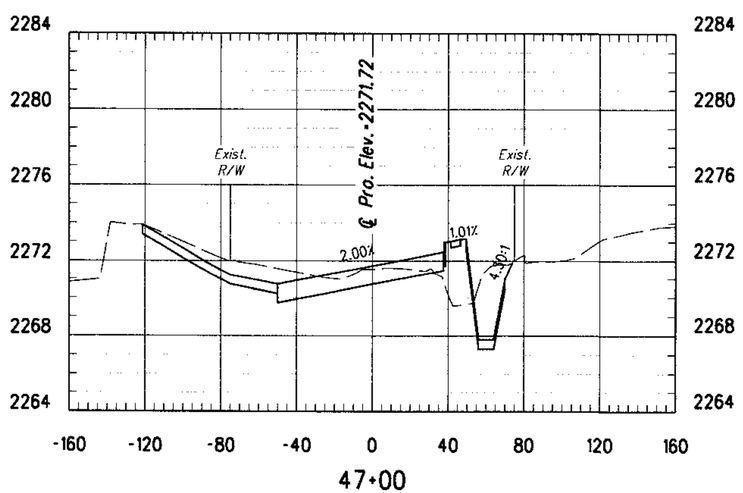

47+00

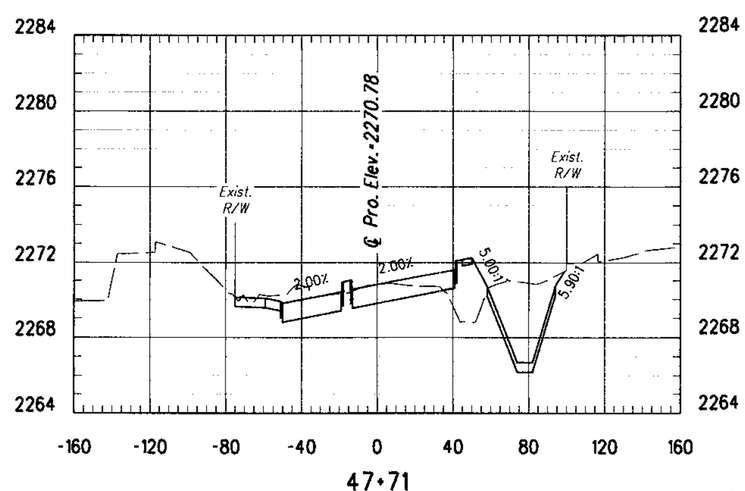

47+71

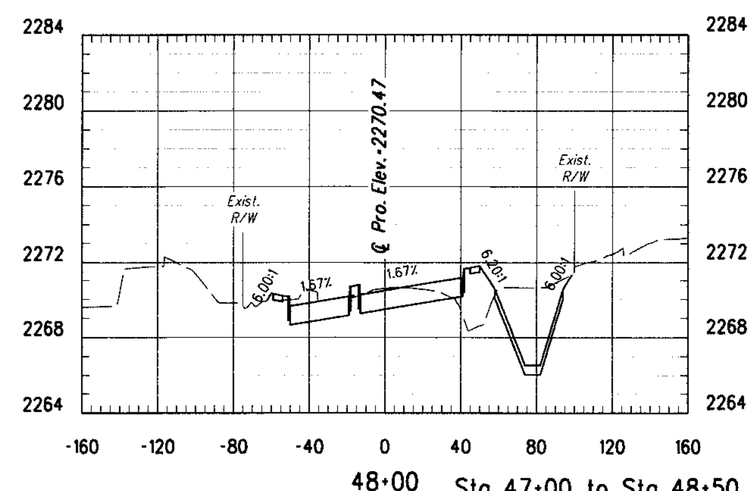

48+00

Sta 47+00 to Sta 48+50

40 0 40 80

Scales	Horiz. 1"=40' Vert. 1"=4'	Sheet XS5 of XS41 Page 320 of 356

Project • 4LCITR

012145
0000000005914
Pima_County_Dept_of_Transportation\PCDOT-La_Cholla_Blvd-Ruthrauff\13.00_CAD\Construction_Documents\Civil\26C-01.dgn
08\20\09 5:07:45 PM dledesmo

LA CHOLLA BLVD. CROSS SECTIONS

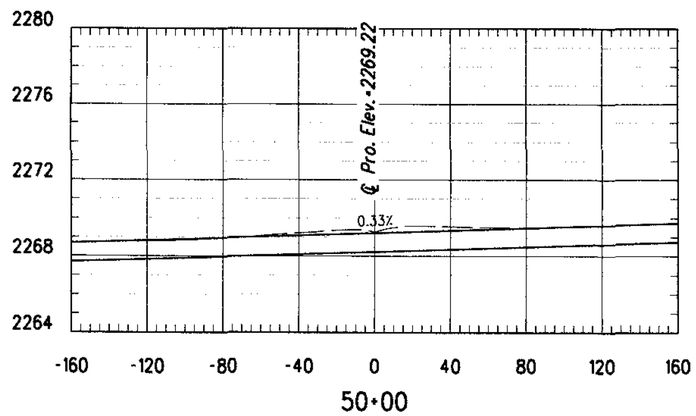

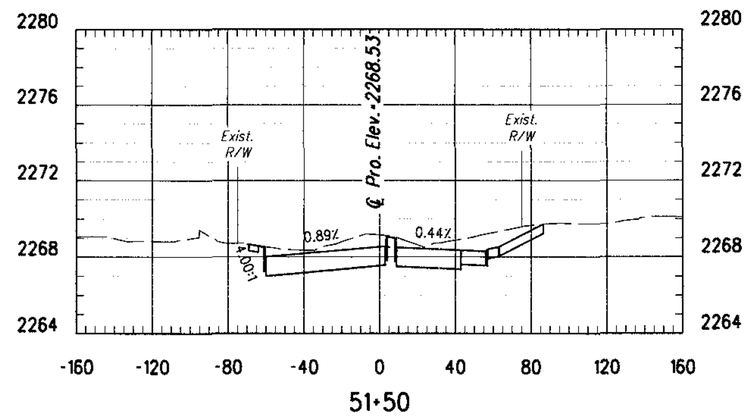

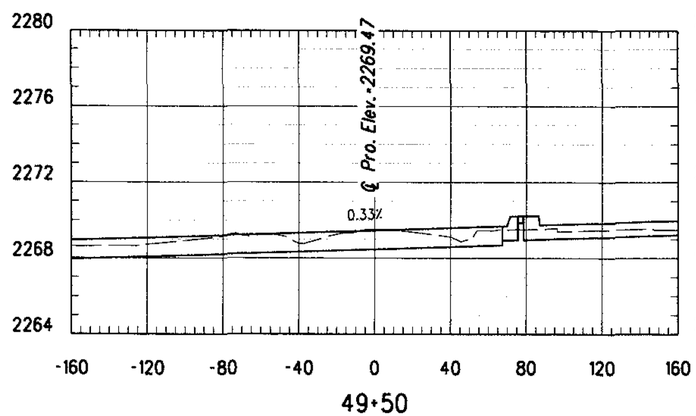

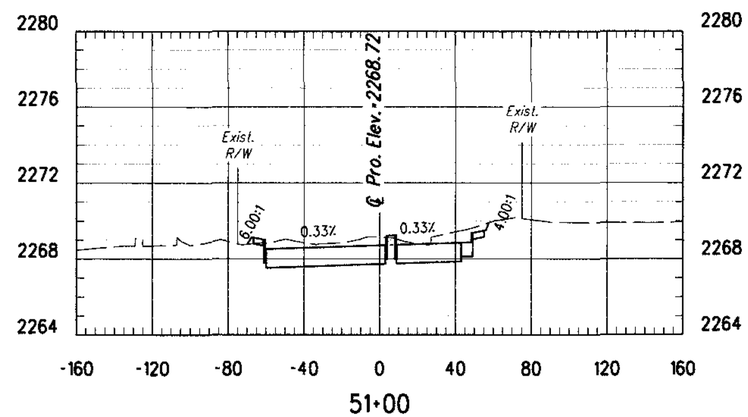

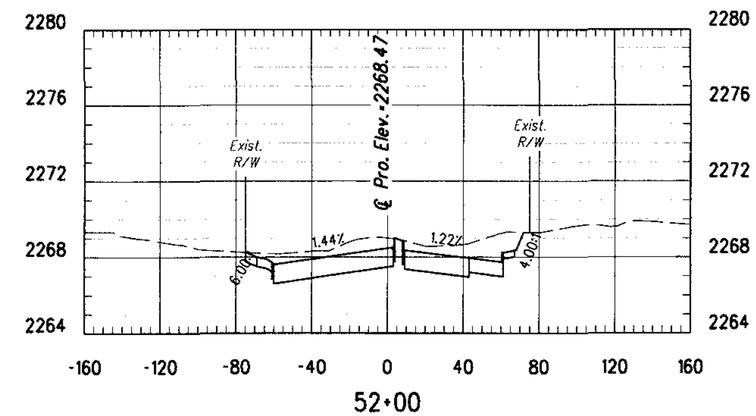

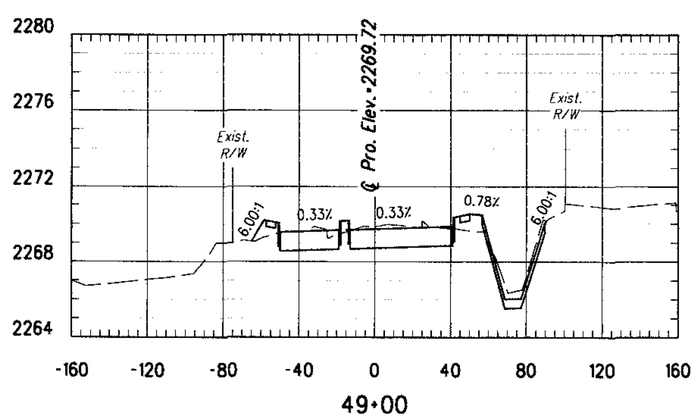

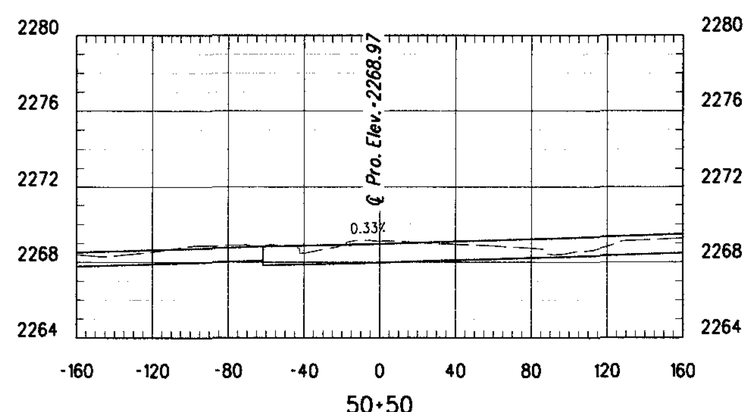

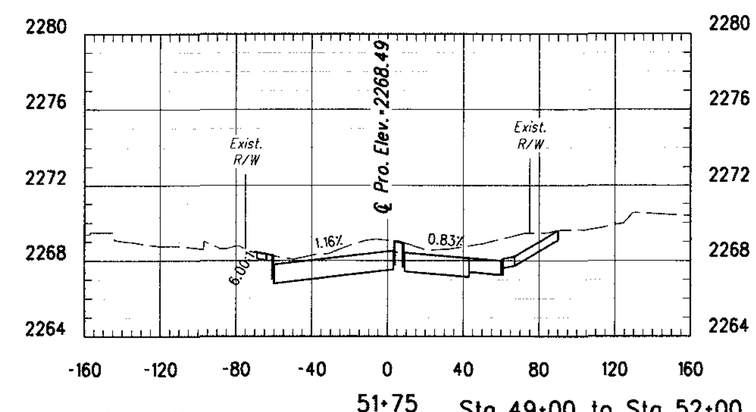

Sta 49+00 to Sta 52+00

40 0 40 80

Scales	Horiz. 1"=40' Vert. 1"=4'	Sheet XS6 of XS41 Page 321 of 356

Project • 4LCITR

08\20\09 5:07:46 PM aledesma

012145
0000000000059914
Pima_County_Dept._of_Transportation\PCDOT-La_Cholla_Blvd-Ruthrauff\13.00_CAD\Construction_Documents\Civil\26C-01.dgn

LA CHOLLA BLVD. CROSS SECTIONS

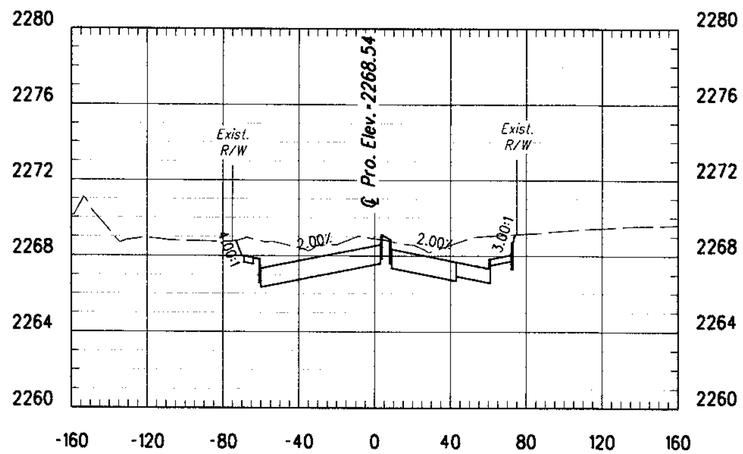

52+50

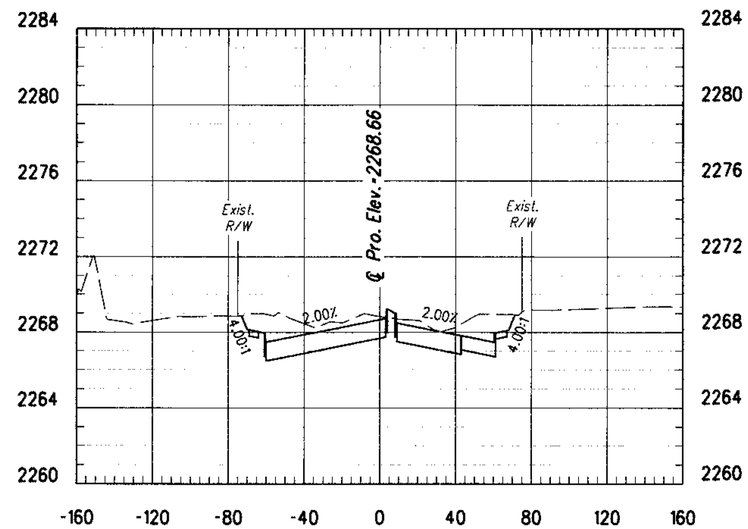

52+85

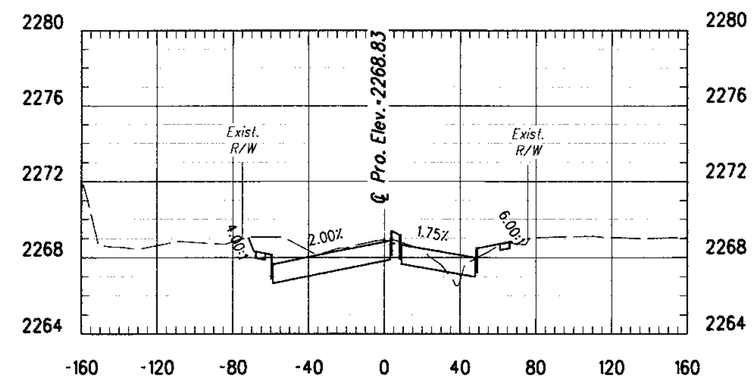

53+20

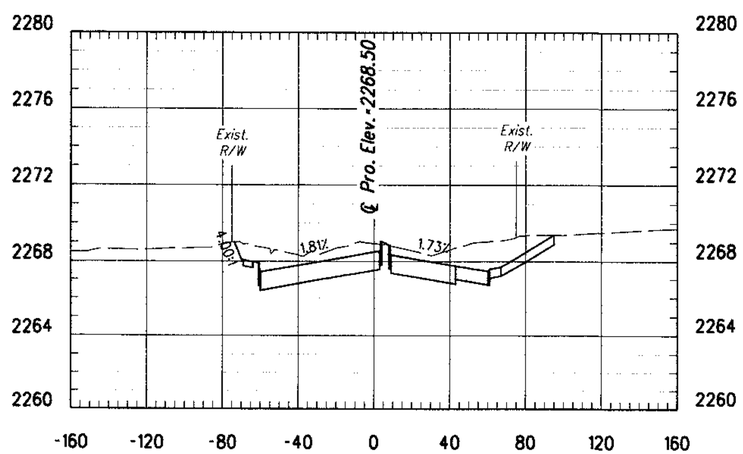

52+33

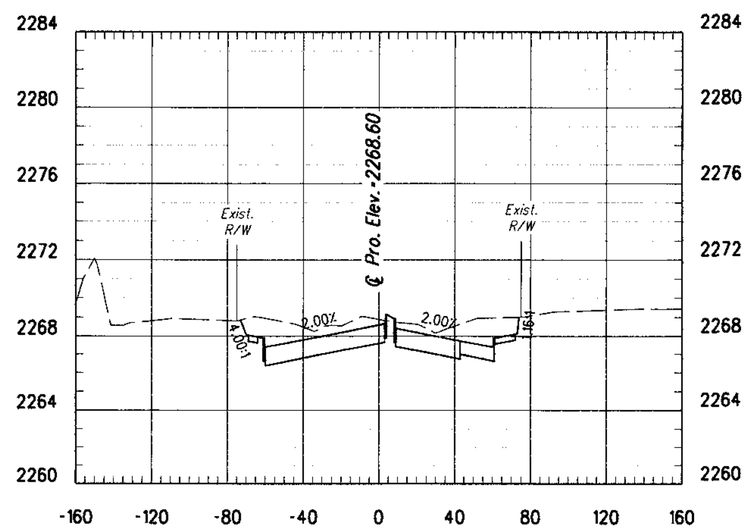

52+69

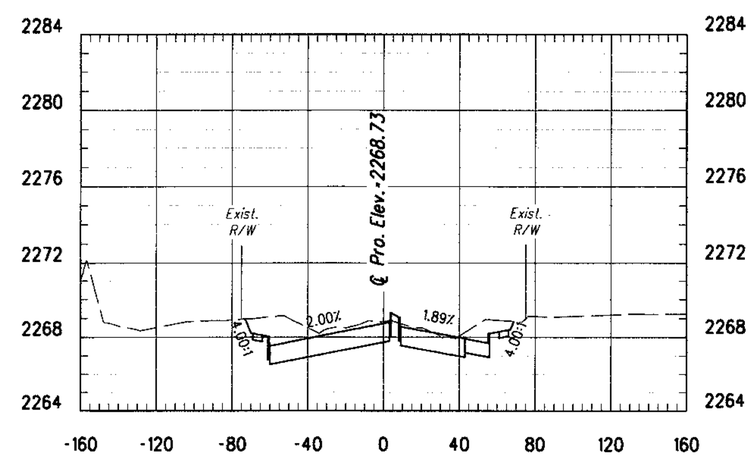

53+00

Sta 52+33 to Sta 53+20

40 0 40 80

Scales	Horiz. 1"=40' Vert. 1"=4'	Sheet XS7 of XS41 Page 322 of 356

012145
0000000000059914
Pima_County_Dept_of_Transportation\PC001-La_Cholla_Blvd-Ruthrauff\13.00_CAD\Construction_Documents\Civil\26C-01.dgn

08\20\09 5:07:47 PM aledesma

Project # 4LCITR

LA CHOLLA BLVD. CROSS SECTIONS

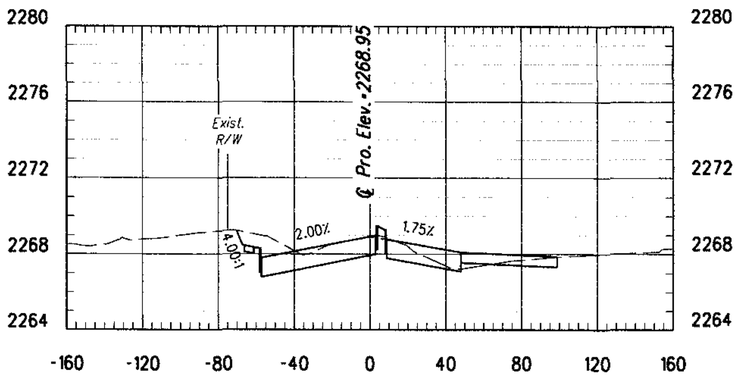

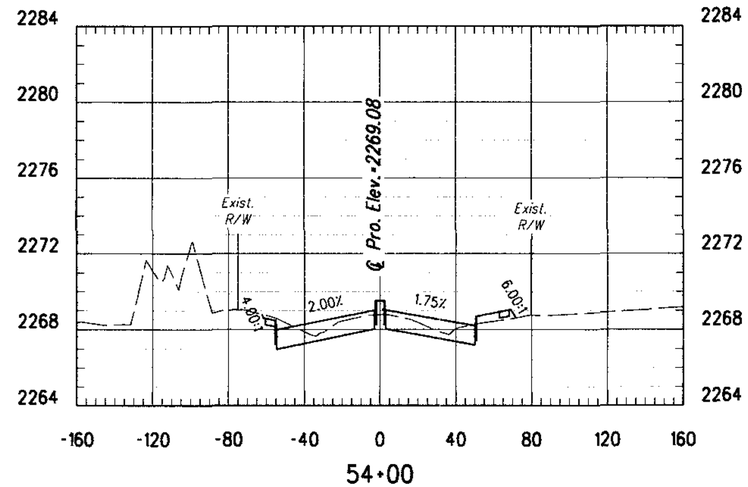

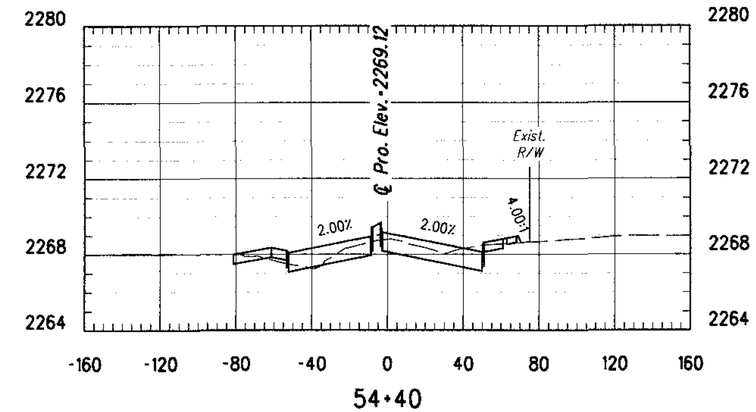

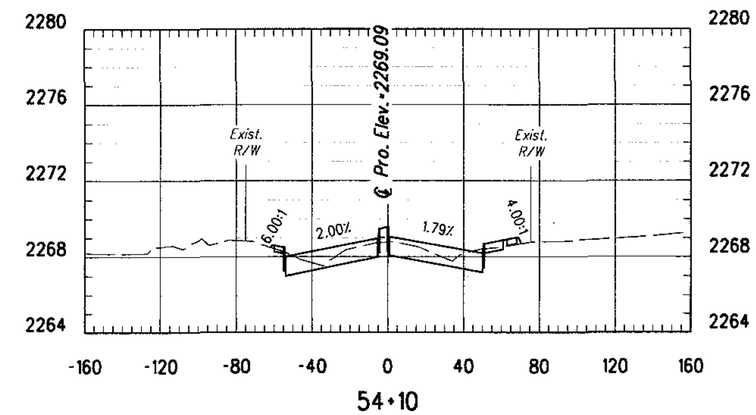

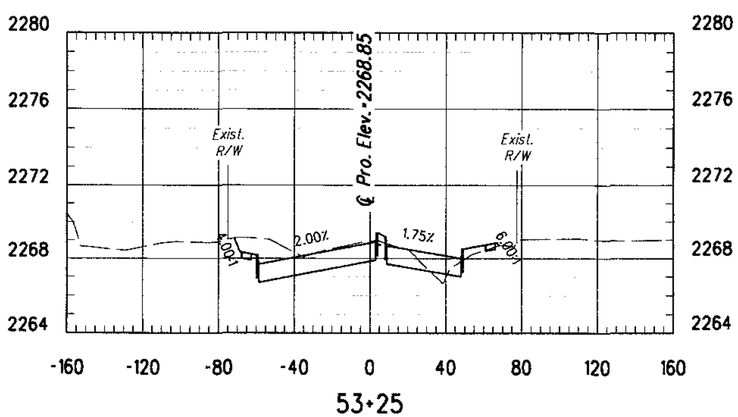

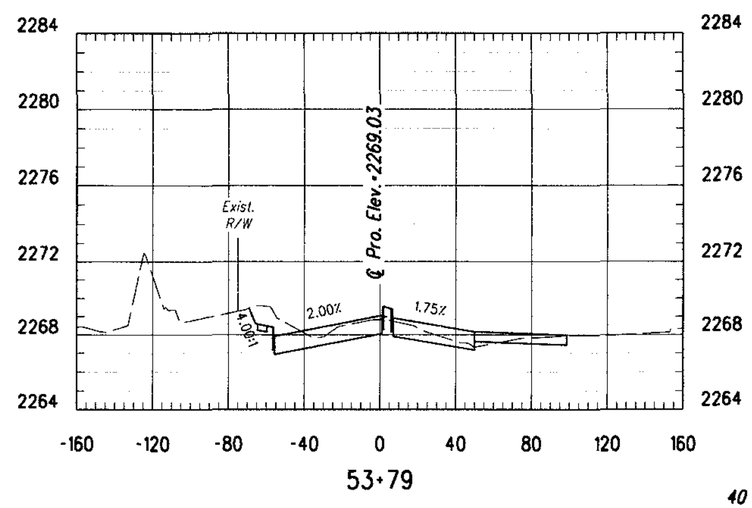

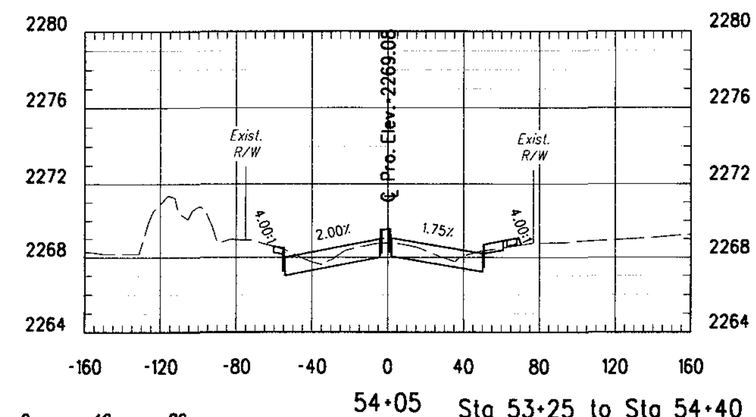

Sta 53+25 to Sta 54+40

40 0 40 80

Scales	Horiz. 1"=40' Vert. 1"=4'	Sheet XS8 of XS41 Page 323 of 356

012145
0000000000059914
Pima_County_Dept_of_Transportation\PC001-La_Cholla_Blvd-Ruthrauff\13.00_CAD\Construction_Documents\Civil\26C_01.dgn

08\20\09 5:07:48 PM aledesmo

Project # 4LCITR

LA CHOLLA BLVD. CROSS SECTIONS

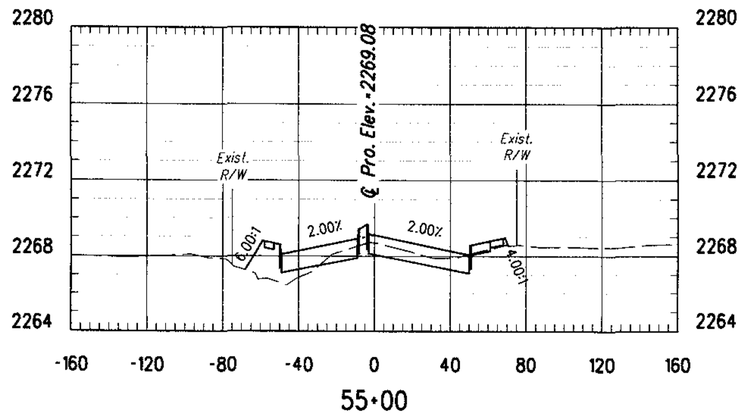

55+00

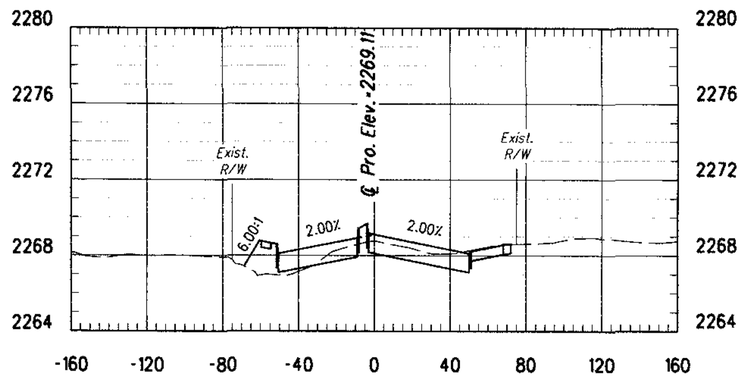

54+71

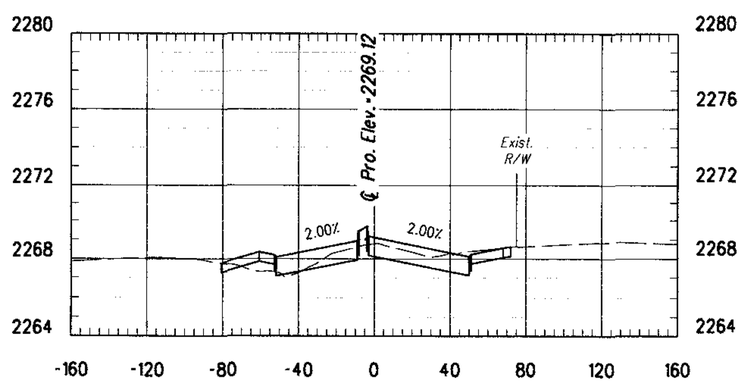

54+50

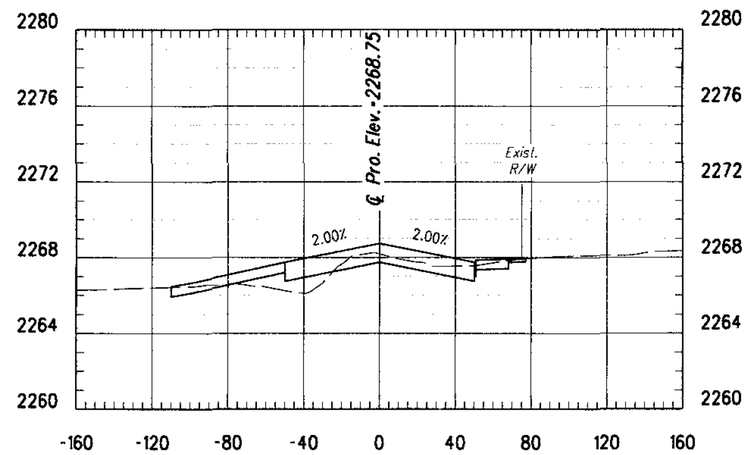

56+00

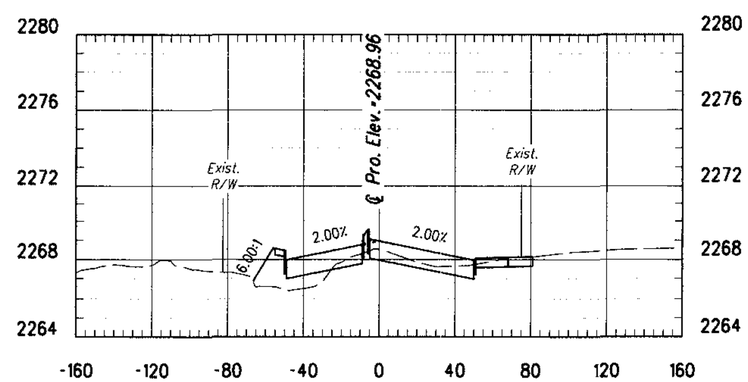

55+50

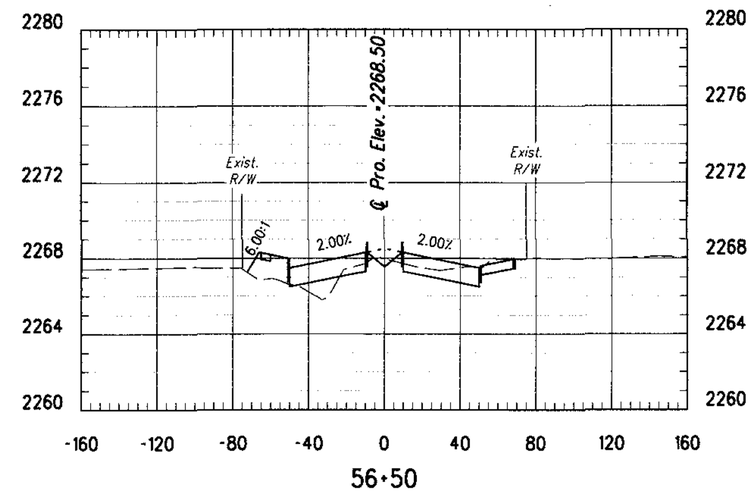

56+50

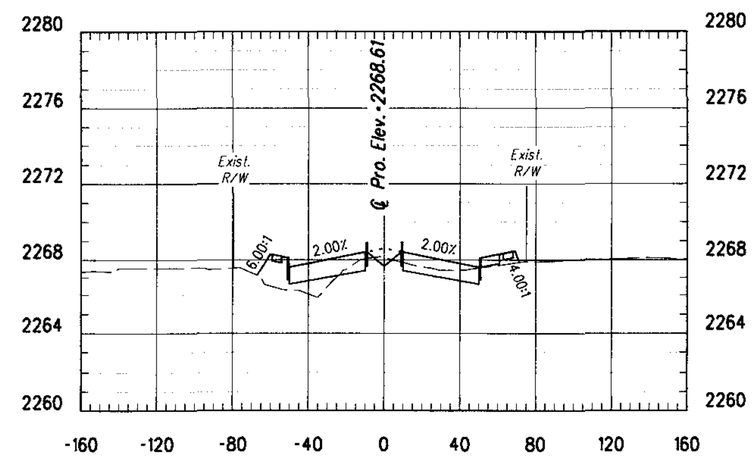

56+28

Sta 54+50 to Sta 56+50

40 0 40 80

Scales	Horiz. 1"=40'	Sheet	XS9 of XS41 Page 324 of 356
	Vert. 1"=4'		

LA CHOLLA BLVD. CROSS SECTIONS

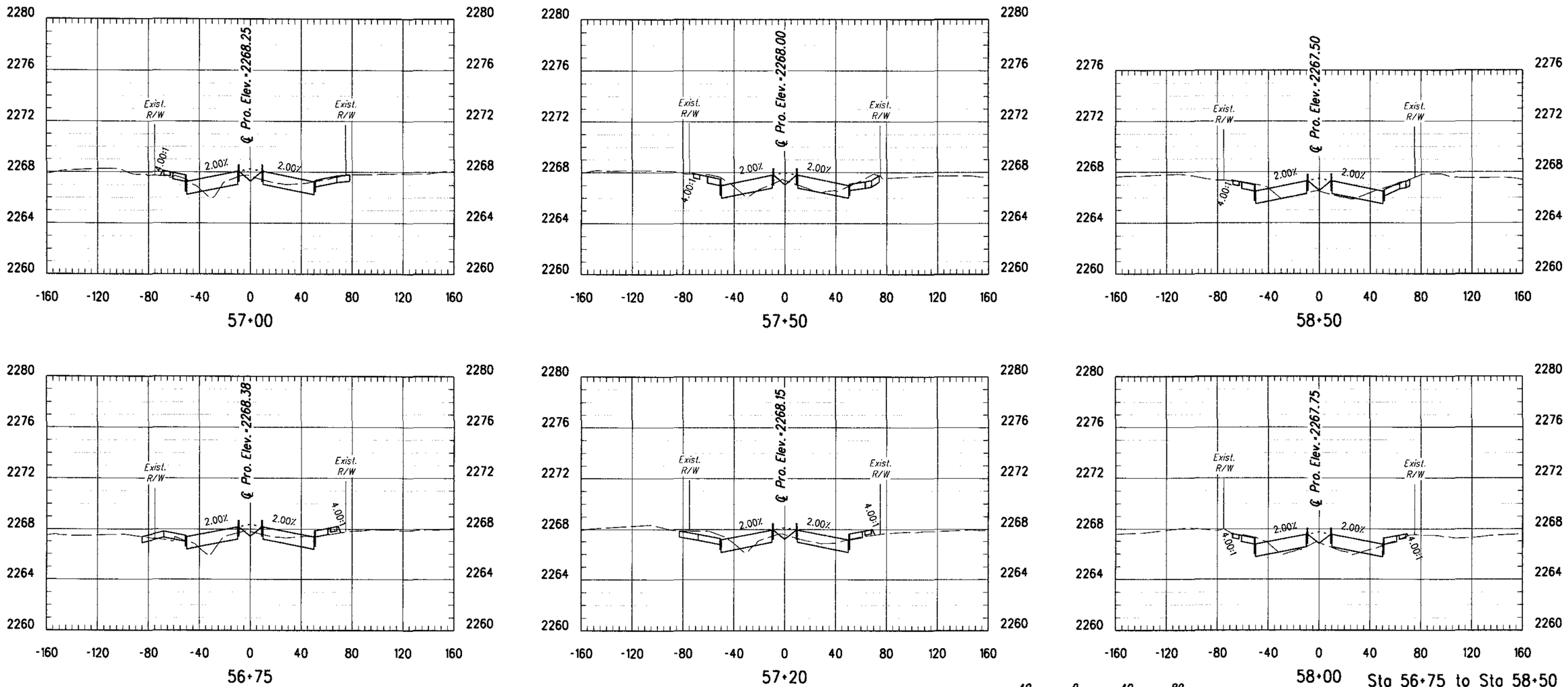

Sta 56+75 to Sta 58+50

Scales	Horiz. 1"=40' Vert. 1"=4'	Sheet XS10 of XS41 Page 325 of 356

012145
000000000059914
Pima_County_Dept_of_Transportation\PC001-La_Cholla_Blvd-Rathrauf\13.00_CAD\Construction_Documents\Civil\26C-01.dgn

08\20\09 5:07:49 PM aledesma

Project • 4LCITR

LA CHOLLA BLVD. CROSS SECTIONS

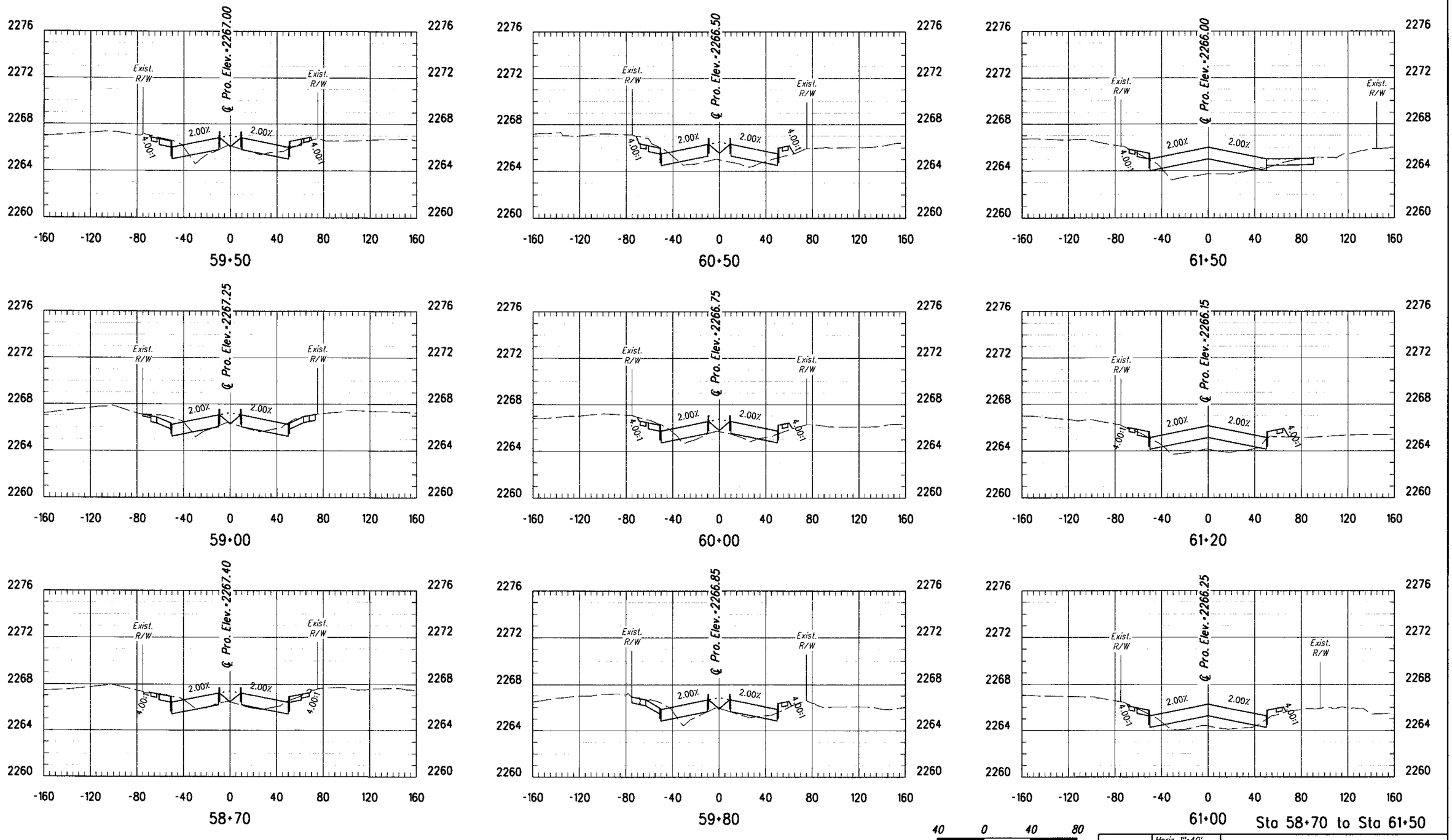

Sta 58+70 to Sta 61+50

Scales	Horiz. 1"=40'	Sheet XS11 of XS41 Page 326 of 356
	Vert. 1"=4'	

012145
00000000005991\4
Pima_County_Dept._of_Transportation\PCDOT-La_Cholla_Blvd-Ruthrauff\13.00_CAD\Construction_Documents\Civil\26C-01.dgn

08\20\09 5:07:50 PM aledesma

Project • 4LCITR

LA CHOLLA BLVD. CROSS SECTIONS

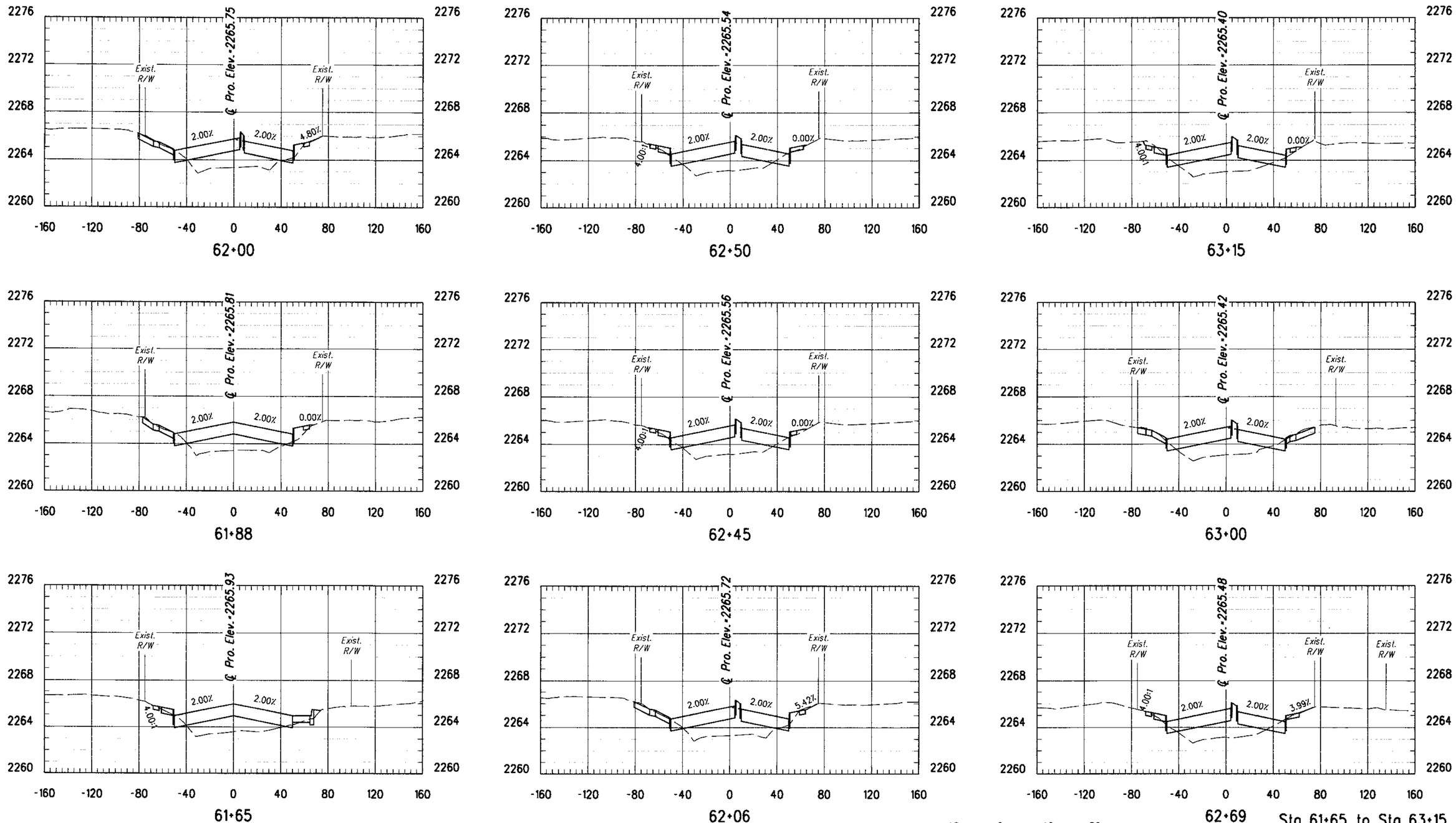

Sta 61+65 to Sta 63+15

40 0 40 80

Scales	Horiz. 1"=40' Vert. 1"=4'	Sheet XS12 of XS41 Page 327 of 356

Project • 4LCITR

012145
0000000000059914
Pima_County_Dept_of_Transportation\PCDOT-La_Cholla_Blvd-Ruthrauff\13.00_CAD\Construction_Documents\Civil\26C-01.dgn

08\20\09 5:07:51 PM aledesma

LA CHOLLA BLVD. CROSS SECTIONS

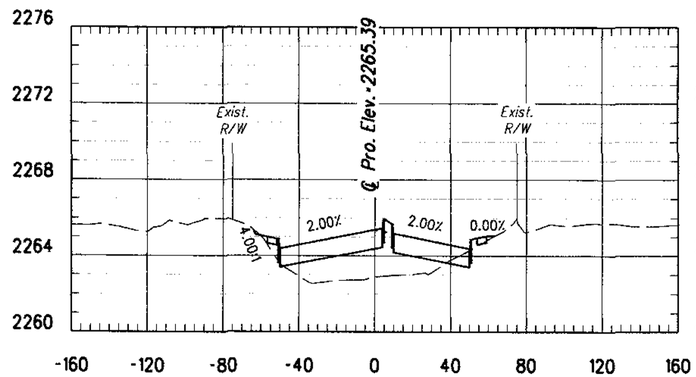

63+75

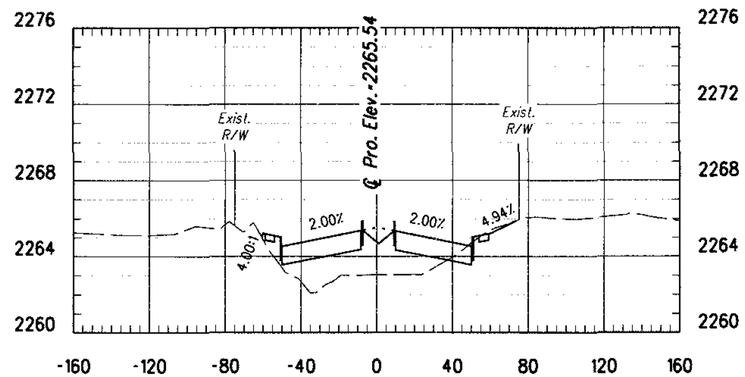

64+50

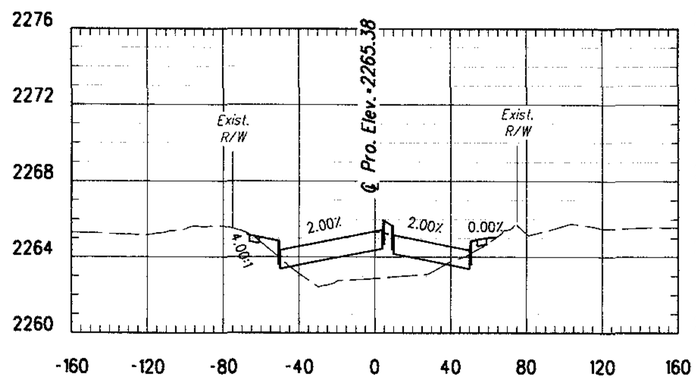

63+50

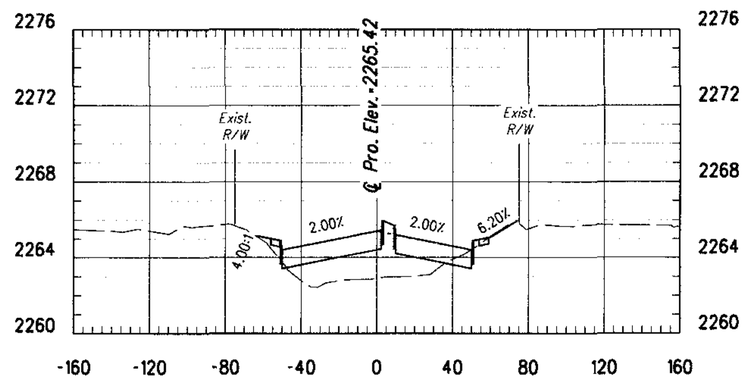

64+00

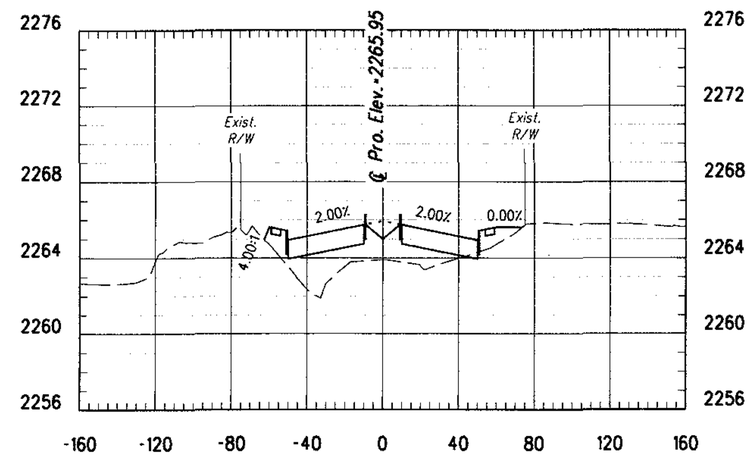

65+50

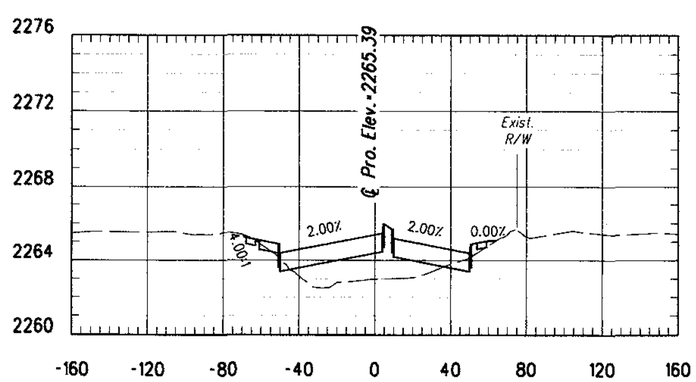

63+25

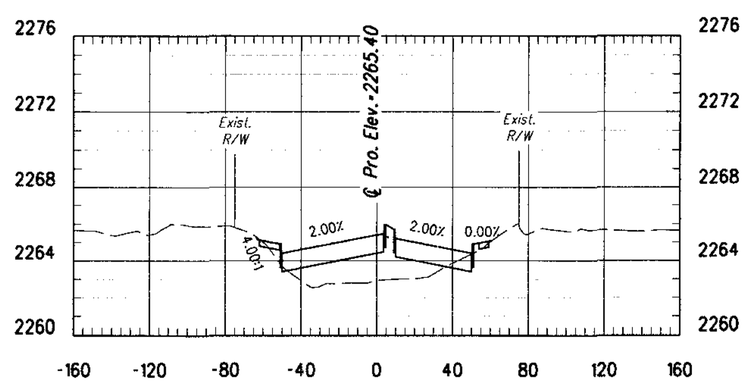

63+88

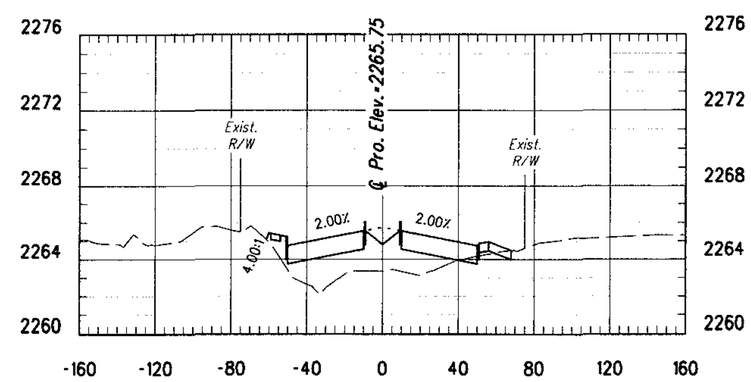

65+00

Sta 63+25 to Sta 65+50

40 0 40 80

Scales	Horiz. 1"=40' Vert. 1"=4'	Sheet XS13 of XS41 Page 328 of 356

012145
0000000000059914
Pima_County_Dept_of_Transportation\PCDOT-La_Cholla_Blvd-Ruthrauff\13.00_CAD\Construction_Documents\Civil\26C_01.dgn

08\20\09 5:07:52 PM oledesma

Project # 4LCITR

LA CHOLLA BLVD. CROSS SECTIONS

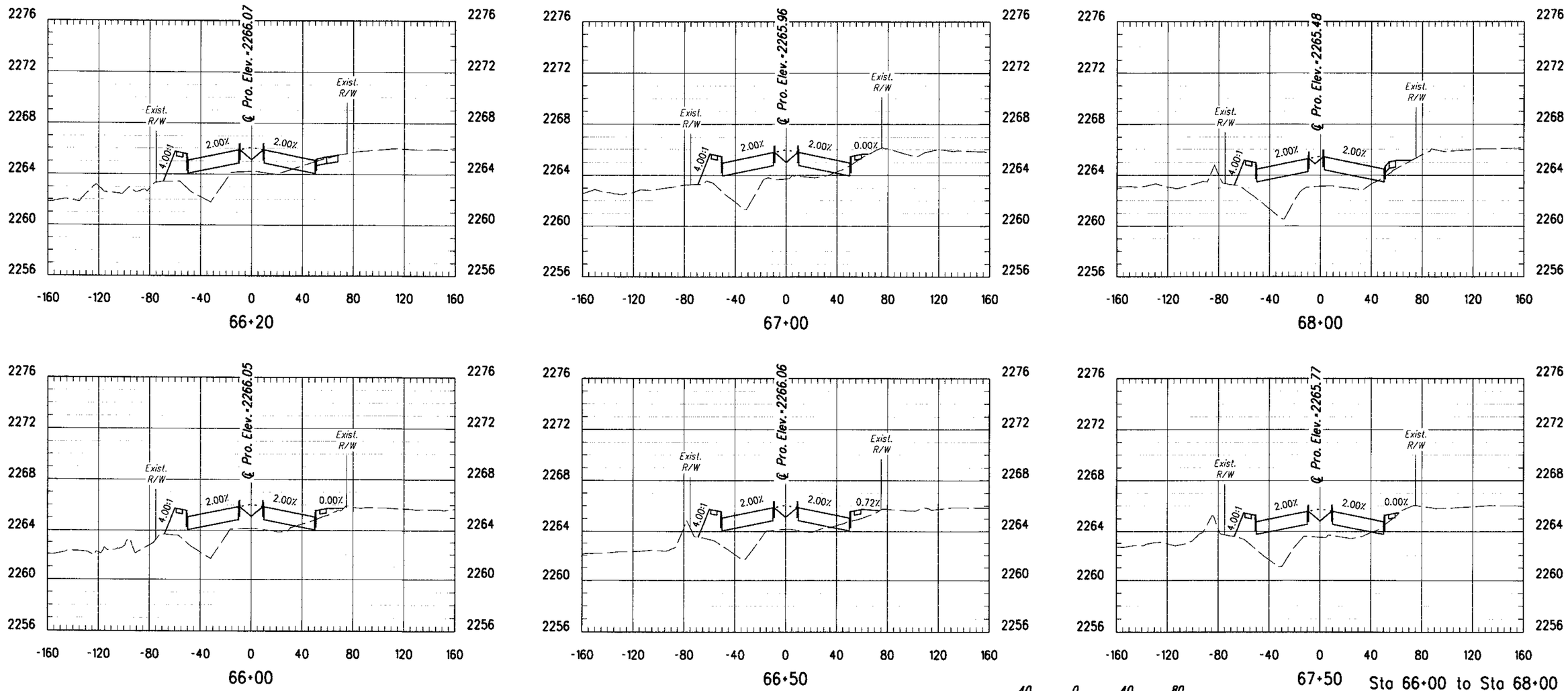

Sta 66+00 to Sta 68+00

Scales	Horiz. 1" = 40' Vert. 1" = 4'	Sheet XS14 of XS41 Page 329 of 356

Project • 4LCITR

08\20\09 5:07:53 PM aledesma

012745
00000000000059914
Pima_County_Dept_of_Transportation\PCDOT-La_Cholla_Blvd-Rutkauf\13.00_CAD\Construction_Documents\Civil\26C-01.dgn

LA CHOLLA BLVD. CROSS SECTIONS

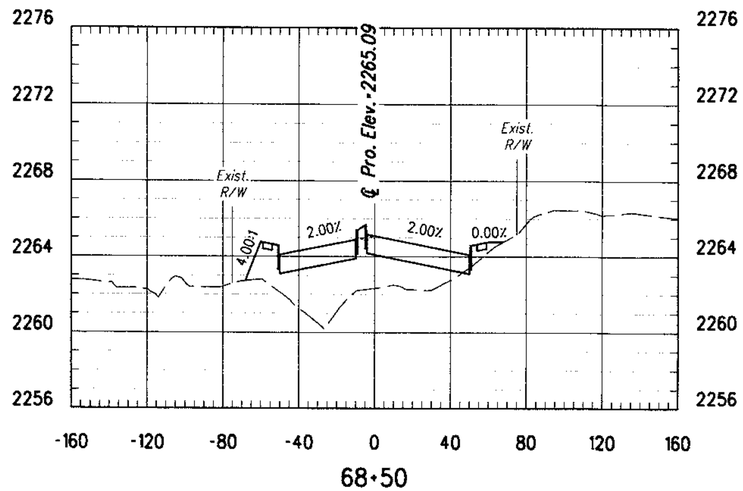

68+50

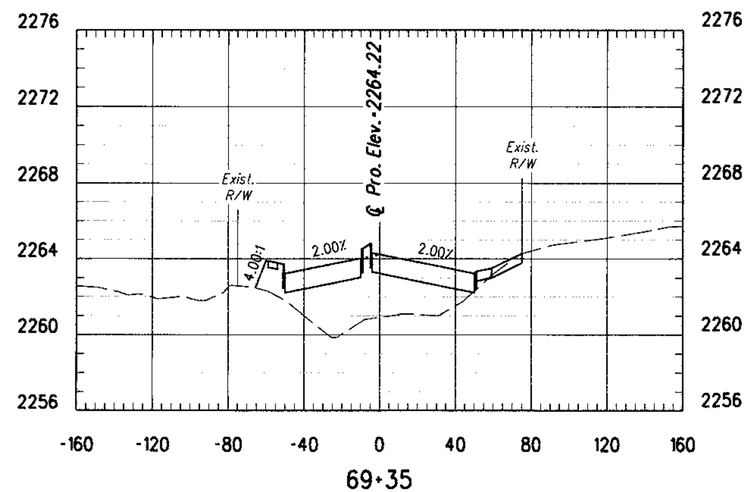

69+35

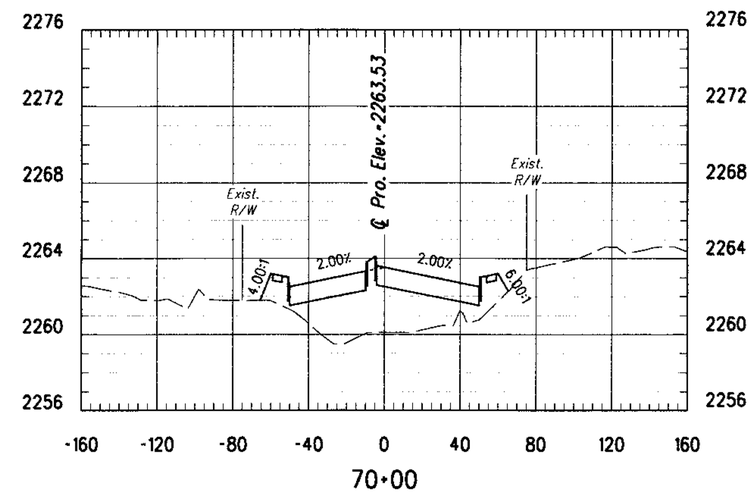

70+00

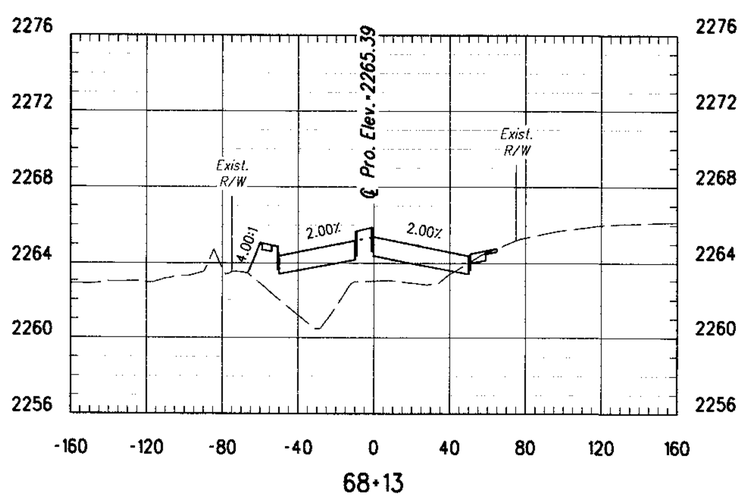

68+13

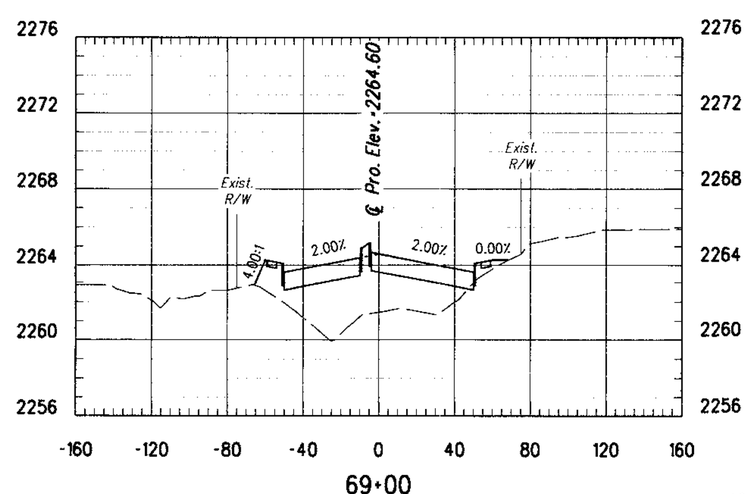

69+00

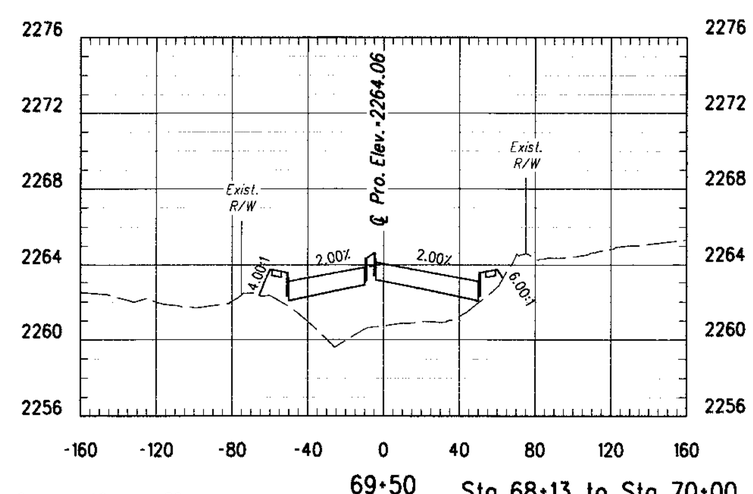

69+50

Sta 68+13 to Sta 70+00

40 0 40 80

Scales	Horiz. 1"=40' Vert. 1"=4'	Sheet XS15 of XS41 Page 330 of 356

012145
000000000059914
Pima_County_Dept_of_Transportation\PC2007-La_Cholla_Blvd-Ruthrauff\12.00_CND\Construction_Documents\Civil\26C-01.dgn

08\20\09 5:07:54 PM aledesma

Project # 4LCITR

LA CHOLLA BLVD. CROSS SECTIONS

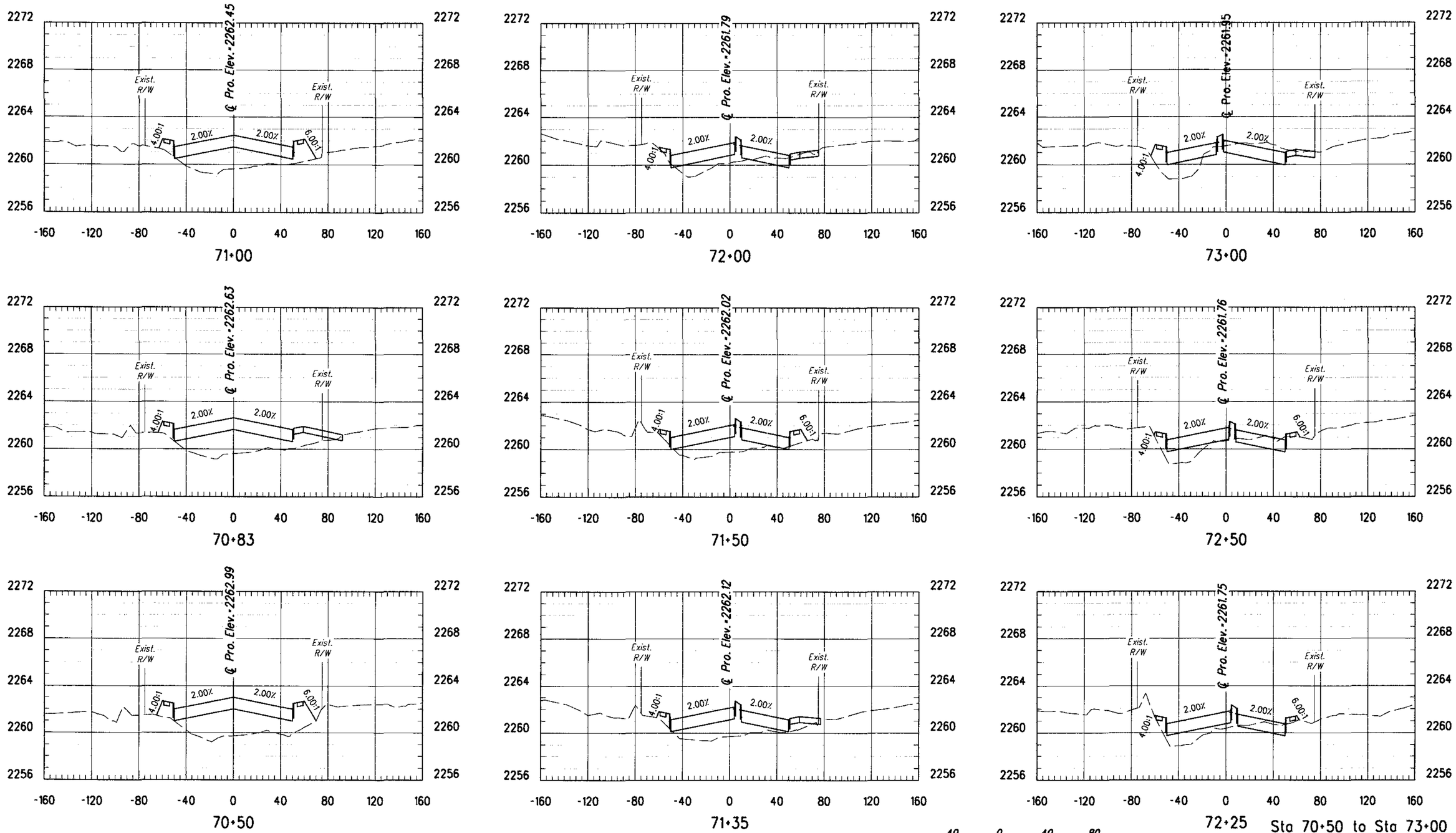

Sta 70+50 to Sta 73+00

Scales	Horiz. 1"=40' Vert. 1"=4'	Sheet XS16 of XS41 Page 331 of 356

Project # 4LCITR

012145
0000000005914
Pima_County_Dept_of_Transportation\PCD01-Lo_Cholla_Blvd-Ruthrauff\13.00_CAD\Construction_Documents\Civil\26C-01.dgn

08\20\09 5:07:55 PM aledesma

LA CHOLLA BLVD. CROSS SECTIONS

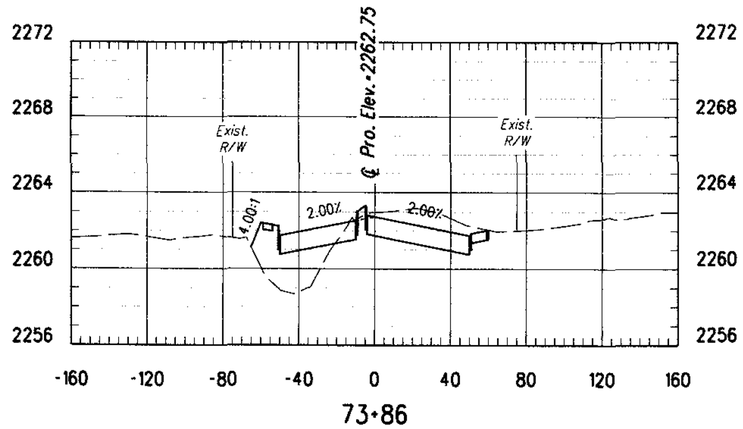

73+86

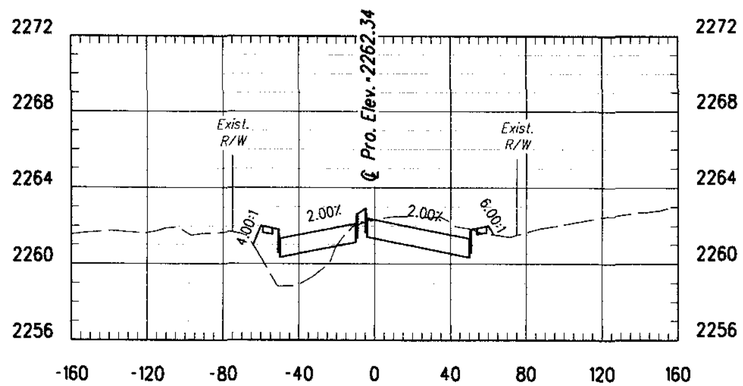

73+50

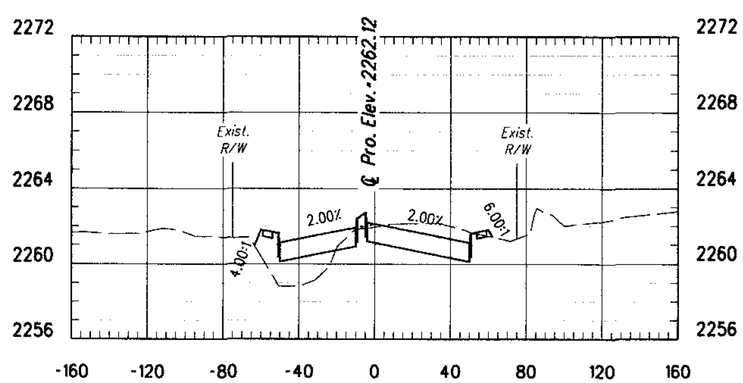

73+25

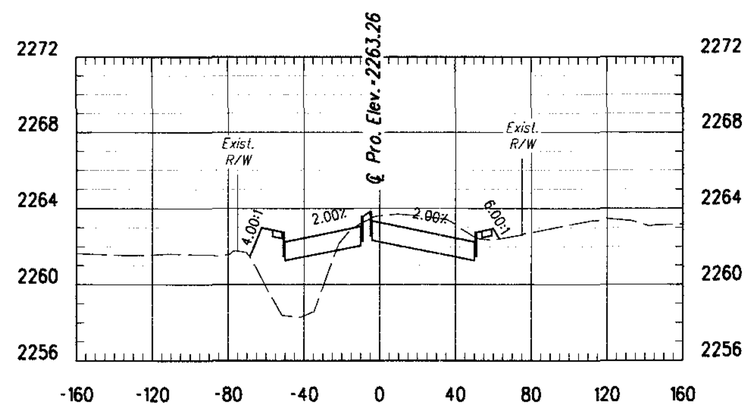

74+22

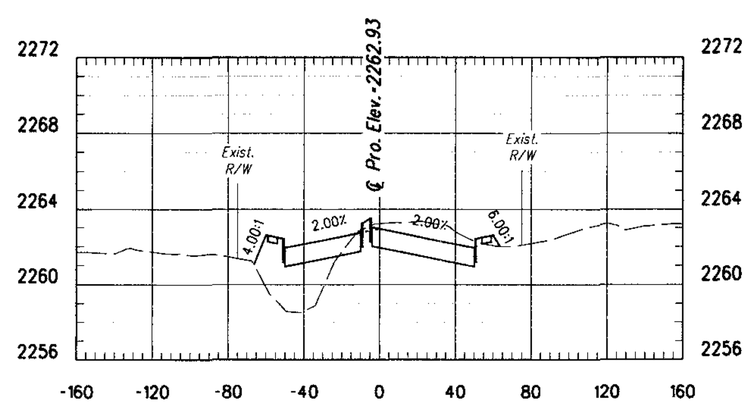

74+00

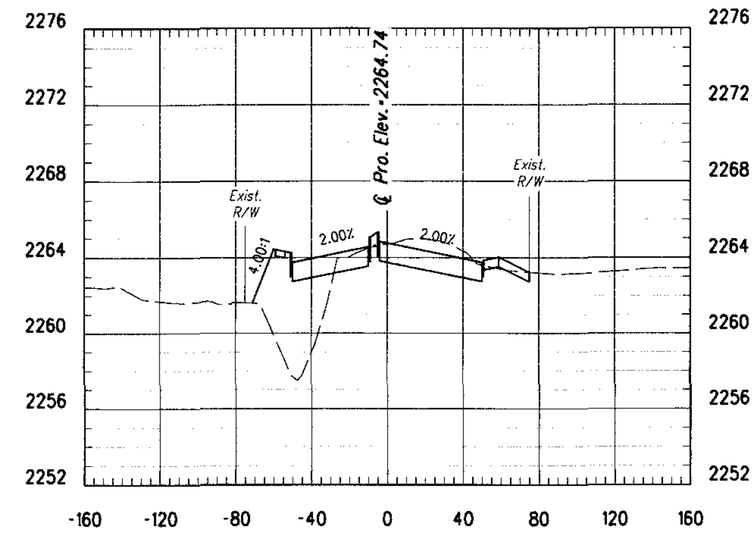

75+00

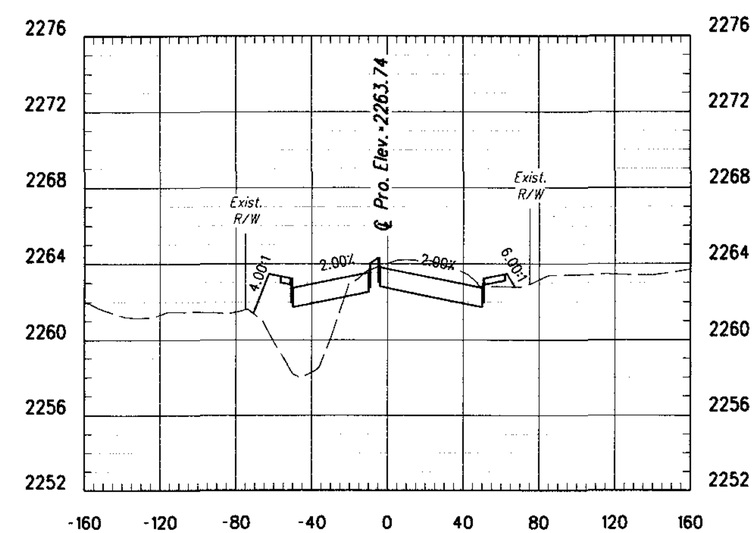

74+50

Sta 73+25 to Sta 75+00

40 0 40 80

Scales	Horiz. 1"=40'	Sheet XS17 of XS41 Page 332 of 356
	Vert. 1"=4'	

Project • 4LCITR

012145
0000000000059914
Pima_County_Dept._of_Transportation\PCDOT-La_Cholla_Blvd-Ruthrauff\13.00_CAD\Construction_Documents\Civil\26C-01.dgn

08\20\09 5:07:56 PM aledesma

LA CHOLLA BLVD. CROSS SECTIONS

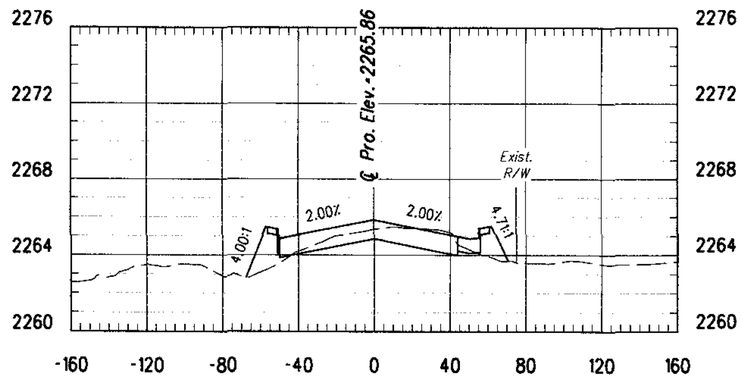

75+50

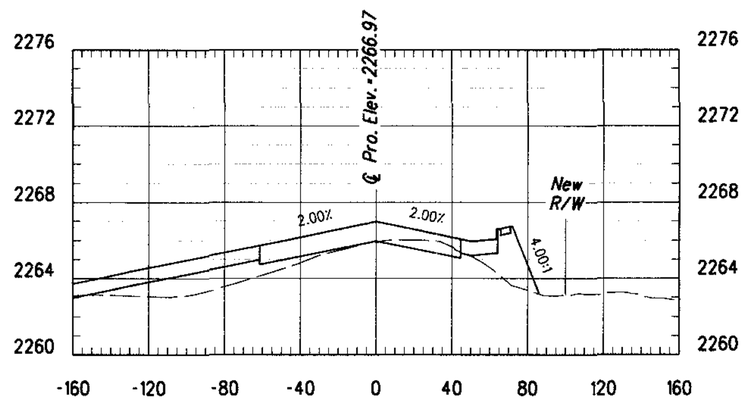

76+00

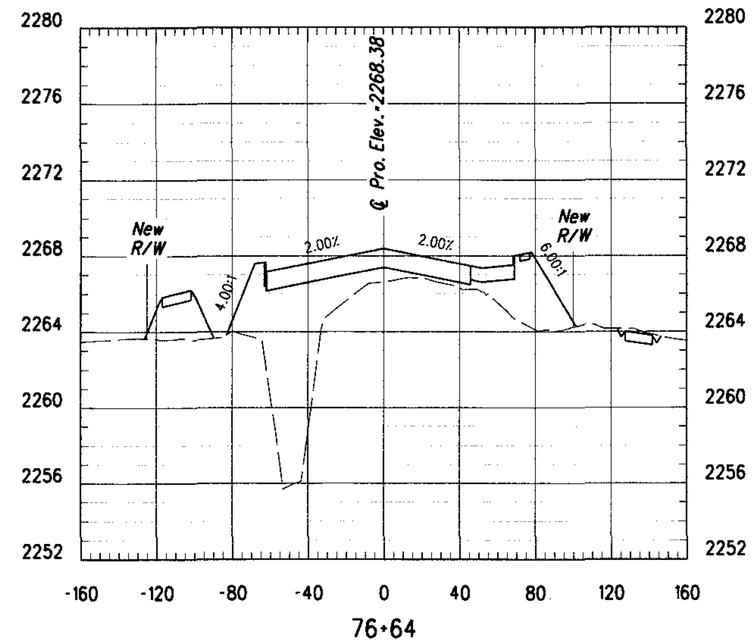

76+64

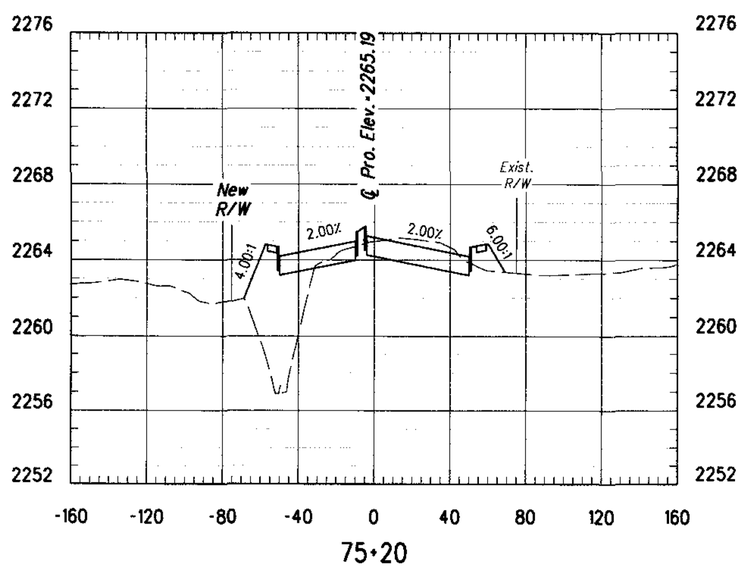

75+20

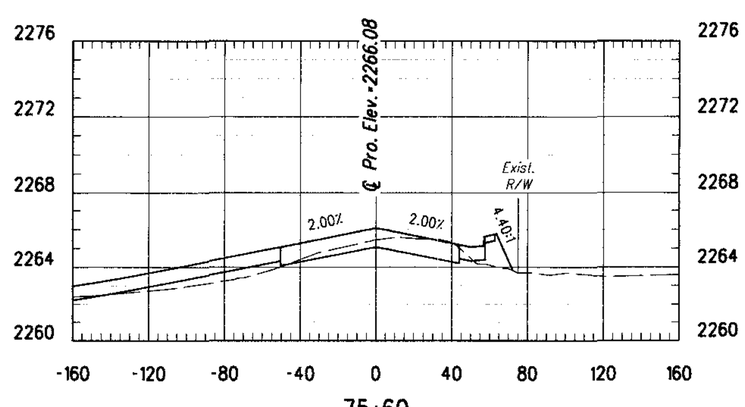

75+60

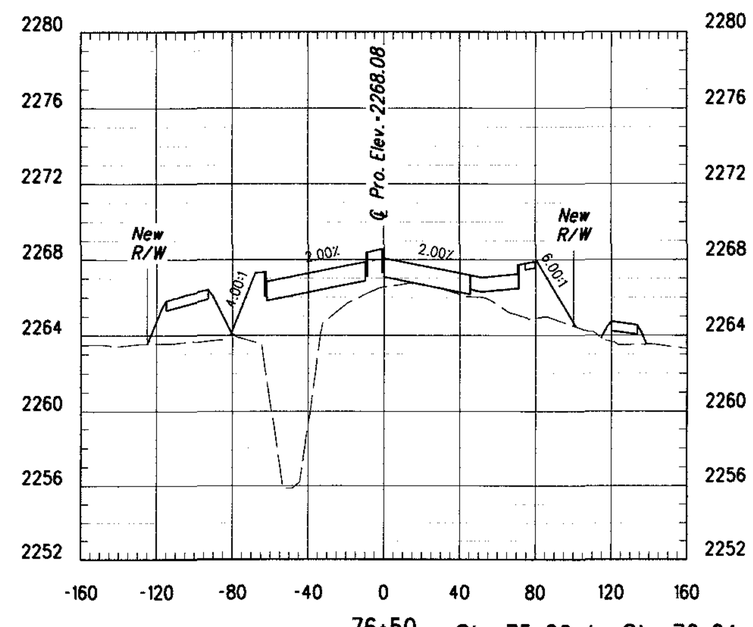

76+50

Sta 75+20 to Sta 76+64

40 0 40 80

Scales	Horiz. 1"=40' Vert. 1"=4'	Sheet XS18 of XS41 Page 333 of 356

012145
0000000000059914
Pima_County_Dept_of_Transportation\PCDOT-La_Cholla_Blvd-Ruthrauff\13.00_CAD\Construction_Documents\Civil\26C-01.dgn

08\20\09 5:07:57 PM aledesma

Project • 4LCITR

LA CHOLLA BLVD. CROSS SECTIONS

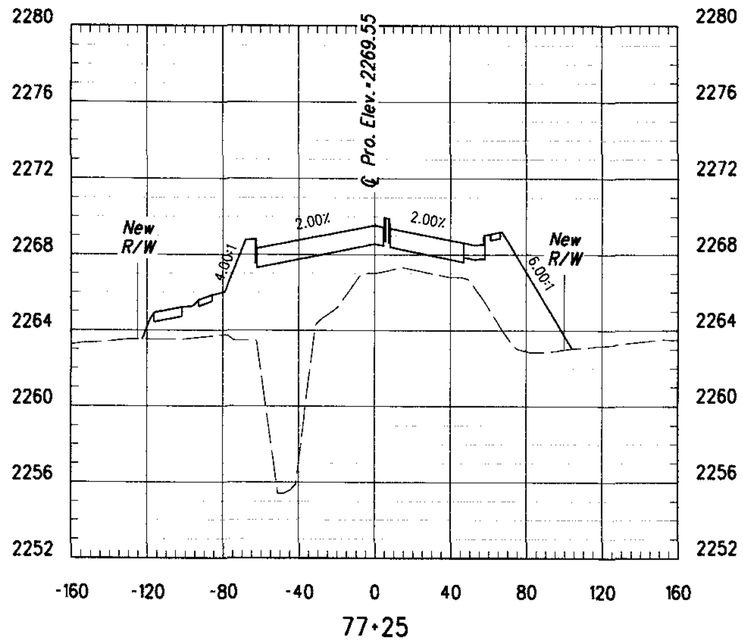

77+25

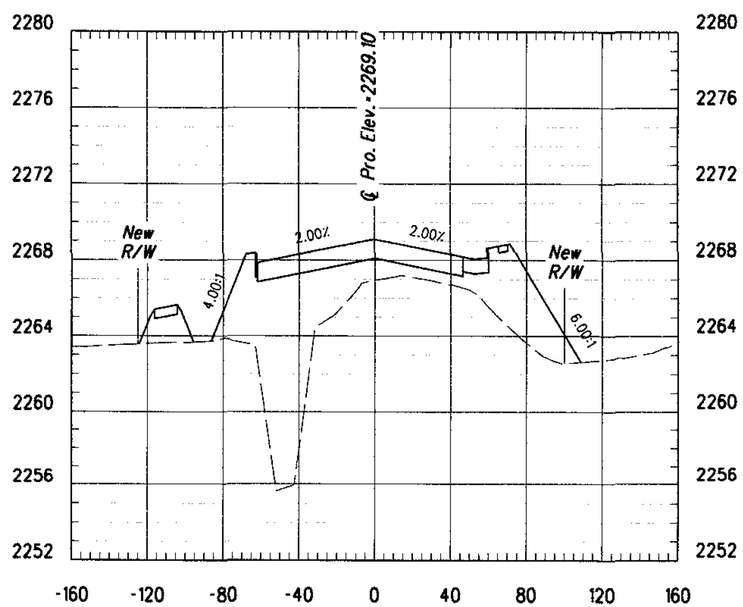

77+00

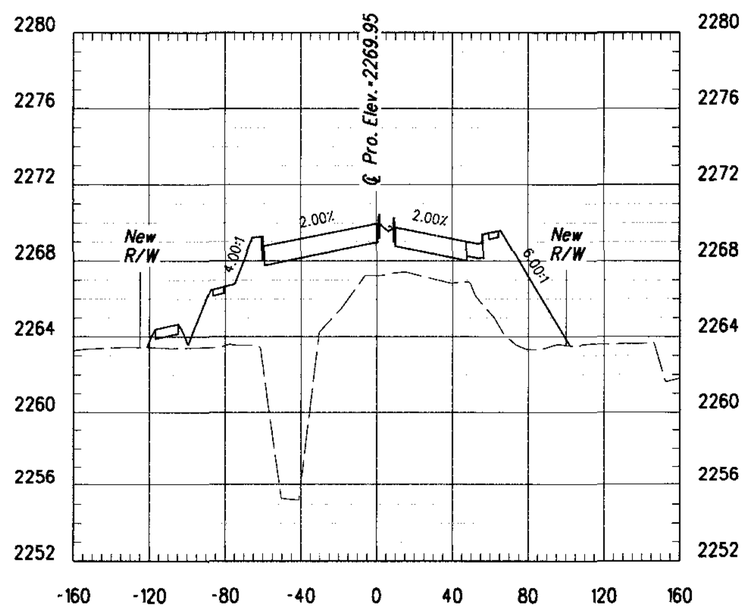

77+50

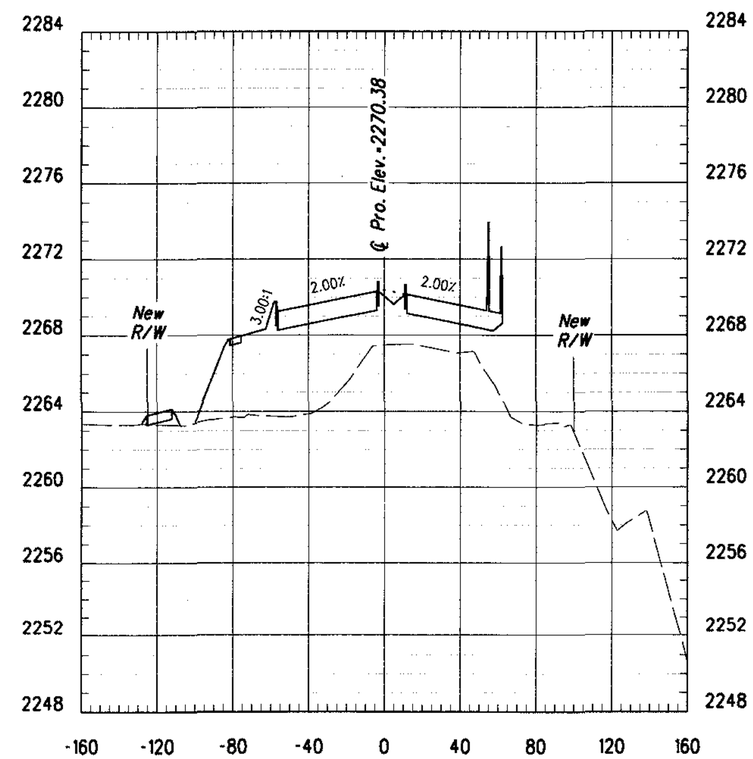

77+80

Sta 77+00 to Sta 77+80

40 0 40 80

Scales	Horiz. 1"=40'	Sheet XS19 of XS41 Page 334 of 356
	Vert. 1"=4'	

LA CHOLLA BLVD. CROSS SECTIONS

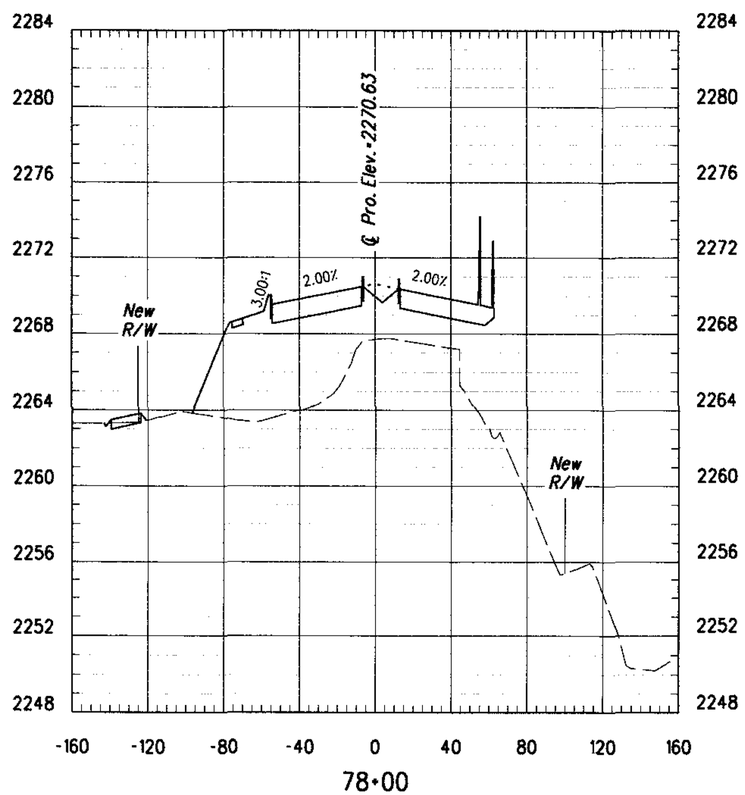

78+00

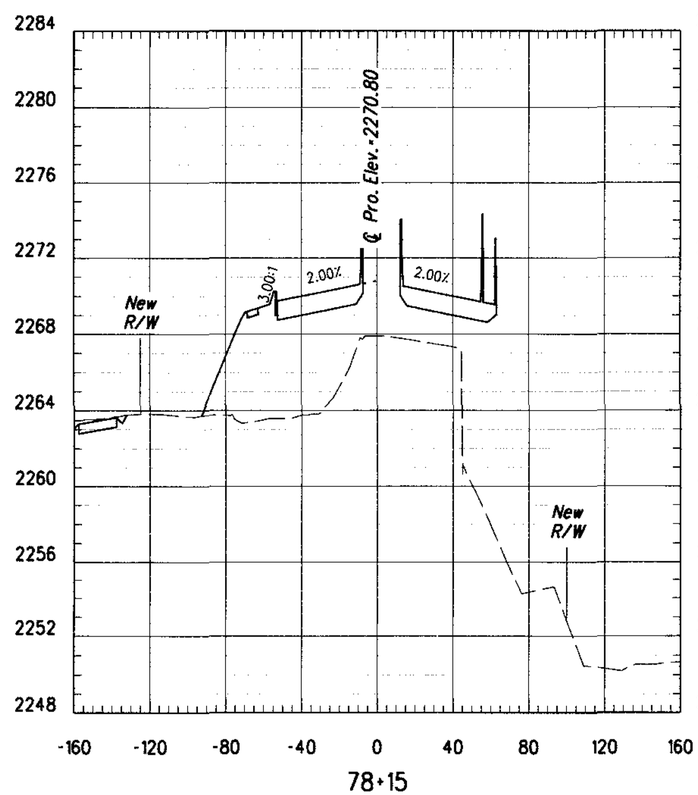

78+15

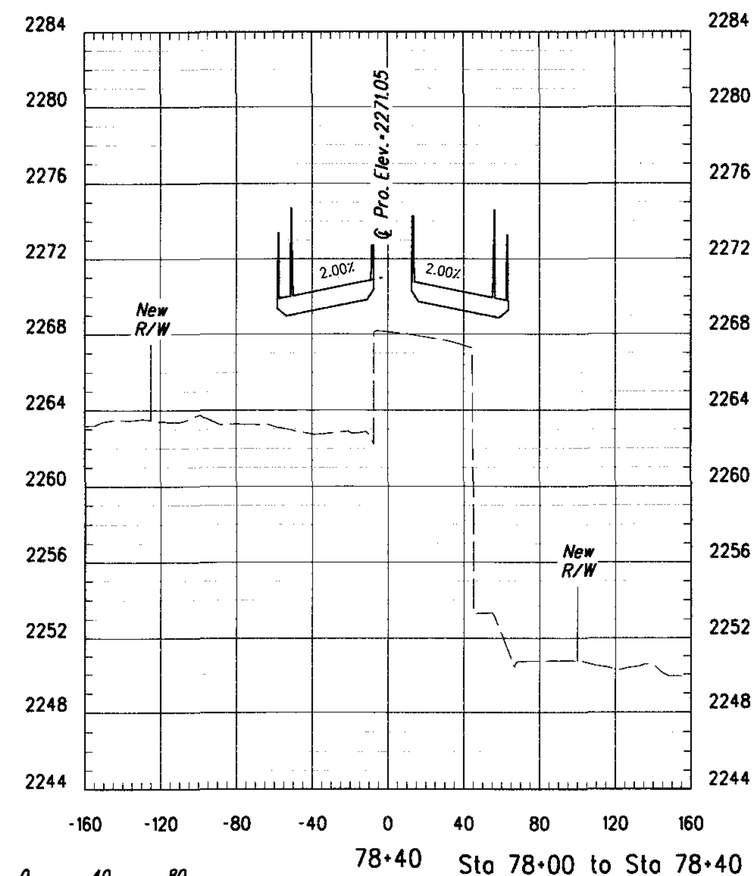

78+40

Sta 78+00 to Sta 78+40

40 0 40 80

Scales	Horiz. 1"=40' Vert. 1"=4'	Sheet XS20 of XS41 Page 335 of 356

Project • 4LCITR

08\20\09 5:07:59 PM aledesma

012145
00000000005991 4
Pima_County_Dept_of_Transportation\PCDOT-La_Cholla_Blvd-Ruthrauff\13.00_CAD\Construction_Documents\Civil\26C-01.dgn

LA CHOLLA BLVD. CROSS SECTIONS

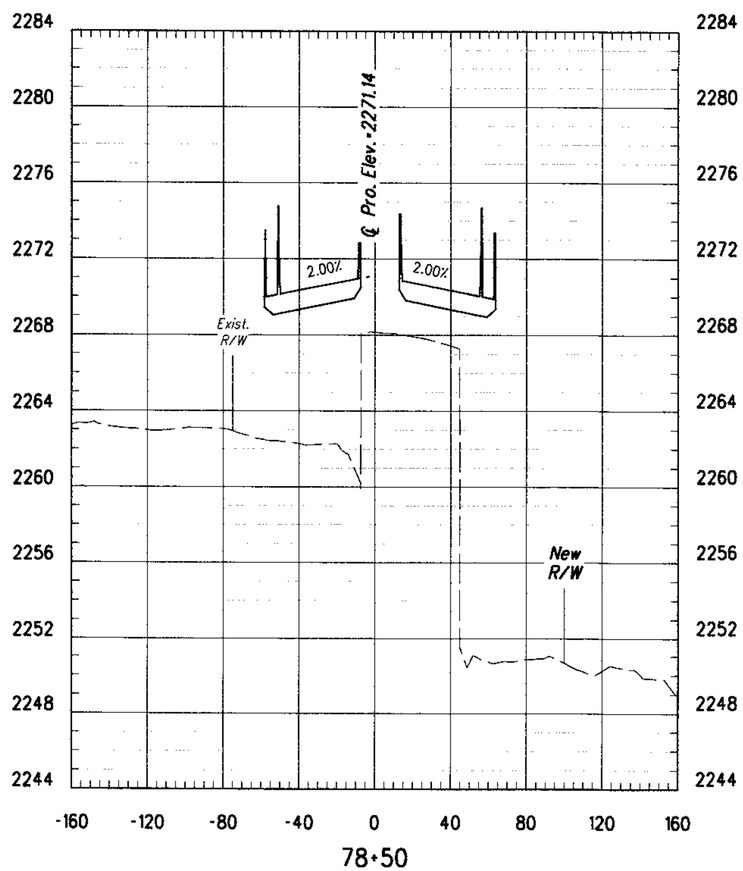

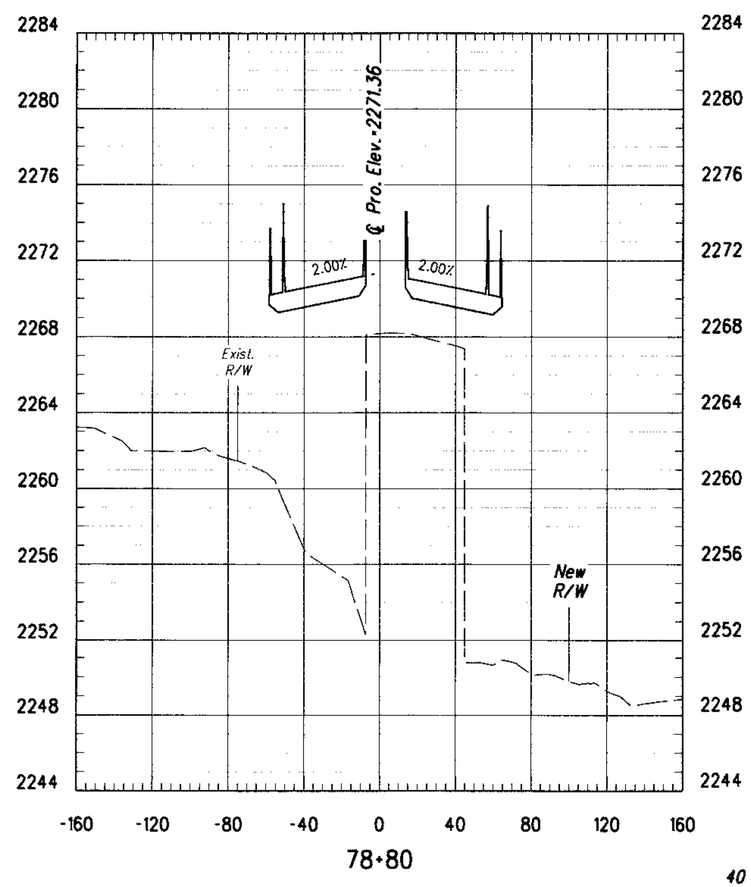

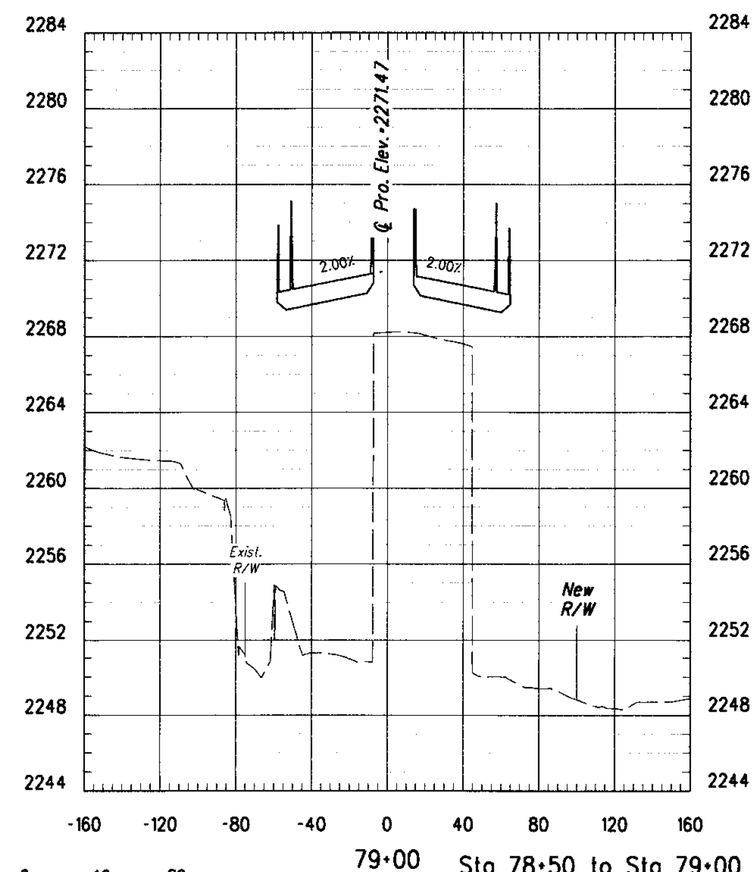

Sta 78+50 to Sta 79+00

40 0 40 80

Scales	Horiz. 1"=40' Vert. 1"=4'	Sheet XS21 of XS41 Page 336 of 356

012145
0000000000059914
Pima_County_Dept_of_Transportation\PCDOT-La_Cholla_Blvd-Ruthrauff\13.00_CAD\Construction_Documents\Civil\26C 01.dgn

08\20\09 5:07:59 PM aledesma

Project # 4LCITR

LA CHOLLA BLVD. CROSS SECTIONS

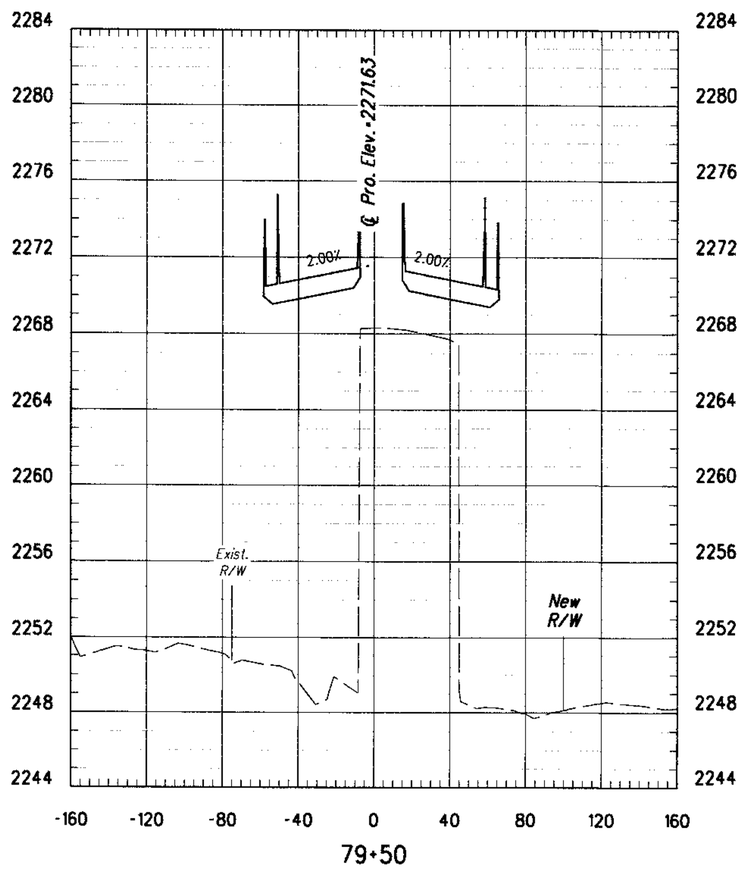

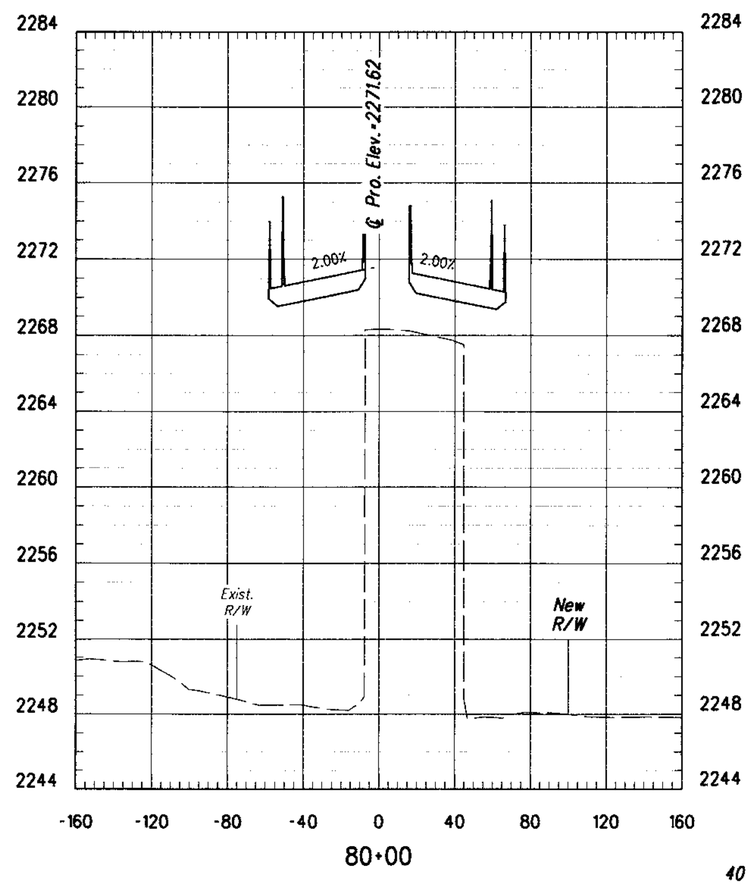

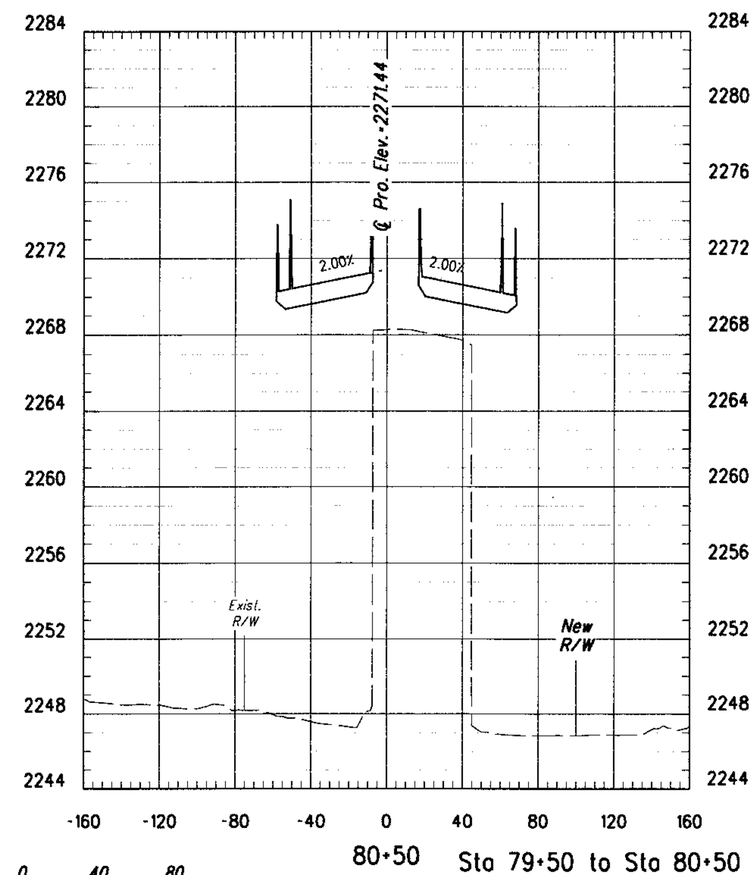

40 0 40 80

Sta 79+50 to Sta 80+50

Scales	Horiz. 1"=40'	Sheet XS22 of XS41 Page 337 of 356
	Vert. 1"=4'	

Project • 4LCITR

012145
000000000059914
Pima_County_Dept._of_Transportation\PCDOT-La_Cholla_Blvd-Ruthrauf\v13.00_CAD\Construction_Documents\Civil\26C-01.dgn

08\20\09 5:08:00 PM aledesma

LA CHOLLA BLVD. CROSS SECTIONS

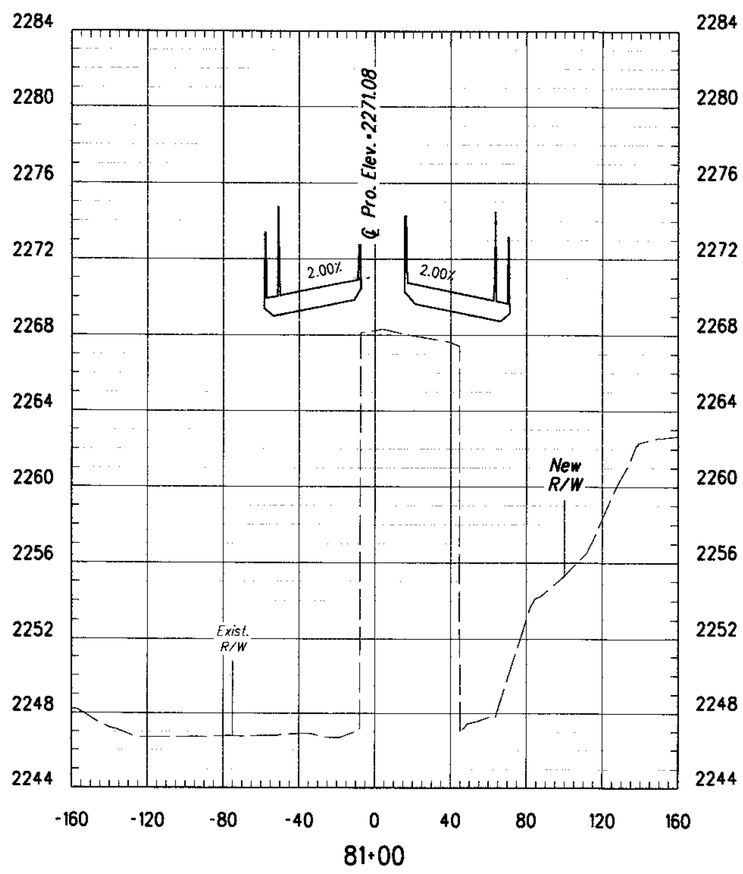

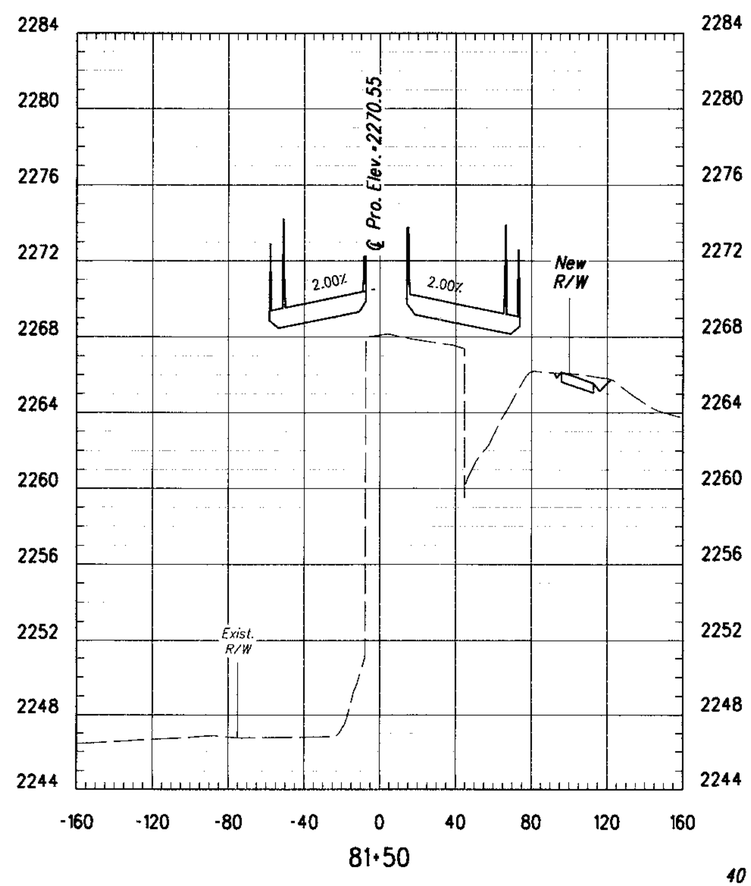

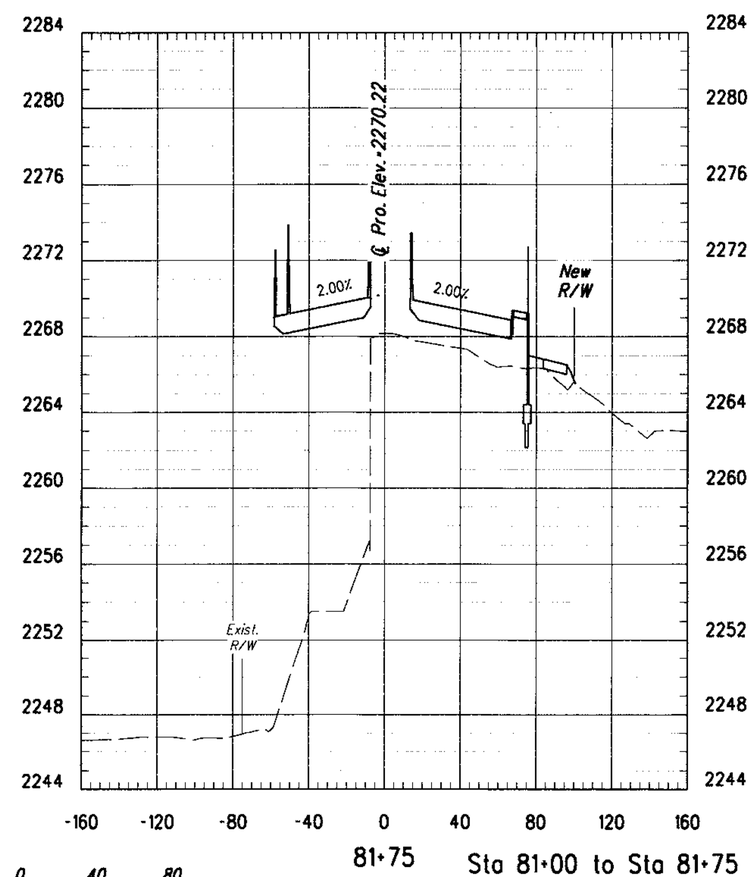

Sta 81+00 to Sta 81+75

40 0 40 80

Scales	Horiz. 1"=40' Vert. 1"=4'	Sheet XS23 of XS41 Page 338 of 356

012145
00000000000059914
Pima_County_Dept._of_Transportation\PCDOT-La_Cholla_Blvd-Rulhrauf\13.00_CAD\Construction_Documents\Civil\26C-01.dgn

08\20\09 5:08:00 PM aledesma

Project • 4LCITR

LA CHOLLA BLVD. CROSS SECTIONS

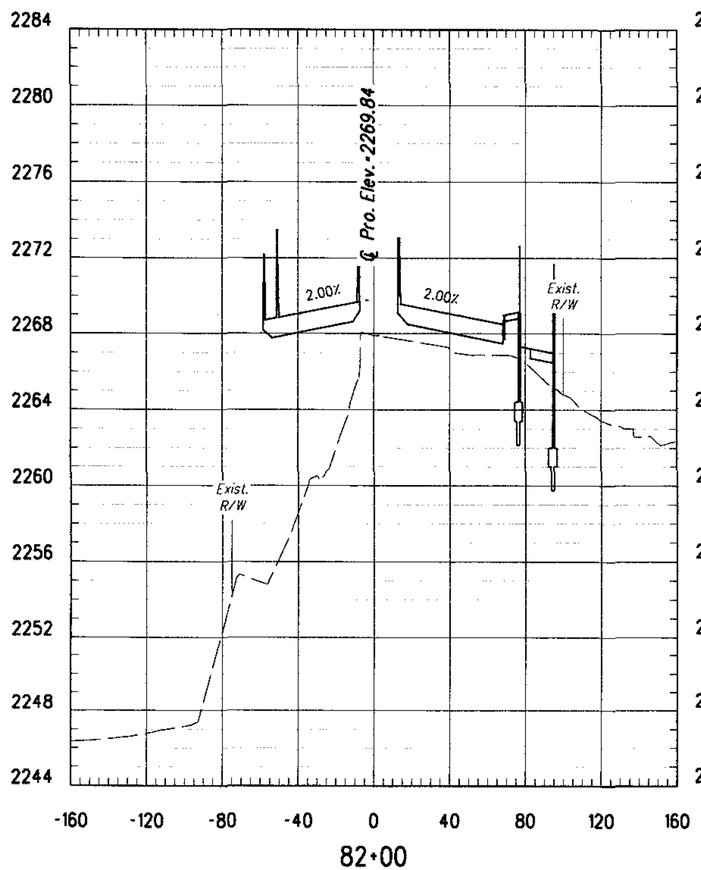

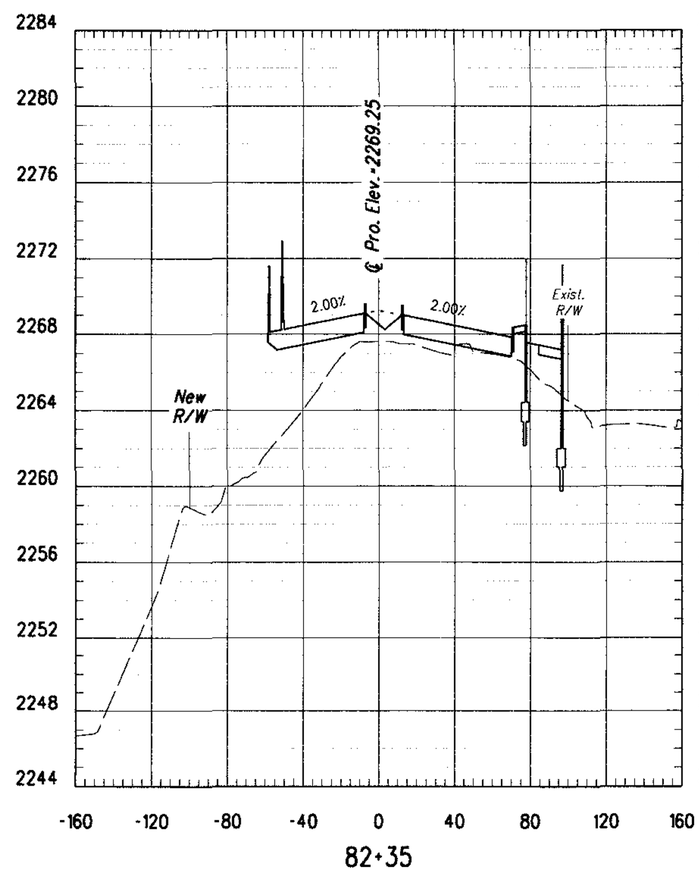

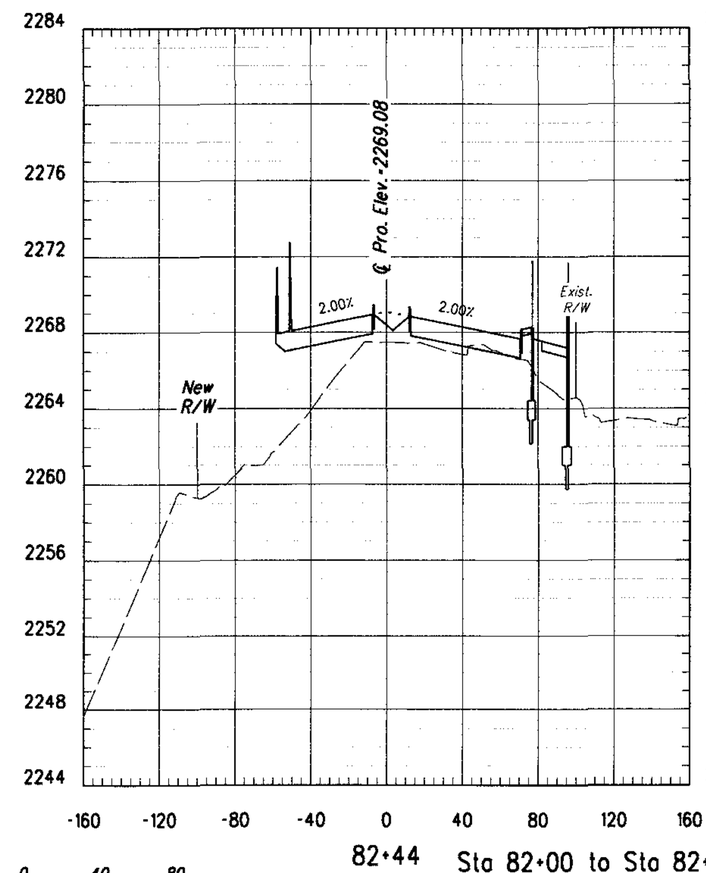

Sta 82+00 to Sta 82+44

40 0 40 80

Scales	Horiz. 1"=40' Vert. 1"=4'	Sheet XS24 of XS41 Page 339 of 356

LA CHOLLA BLVD. CROSS SECTIONS

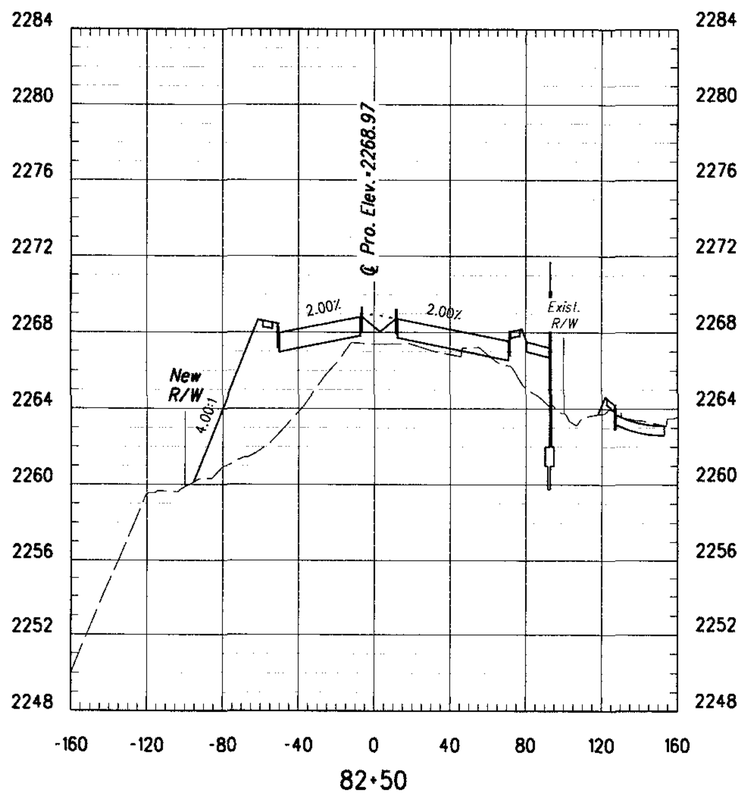

82+50

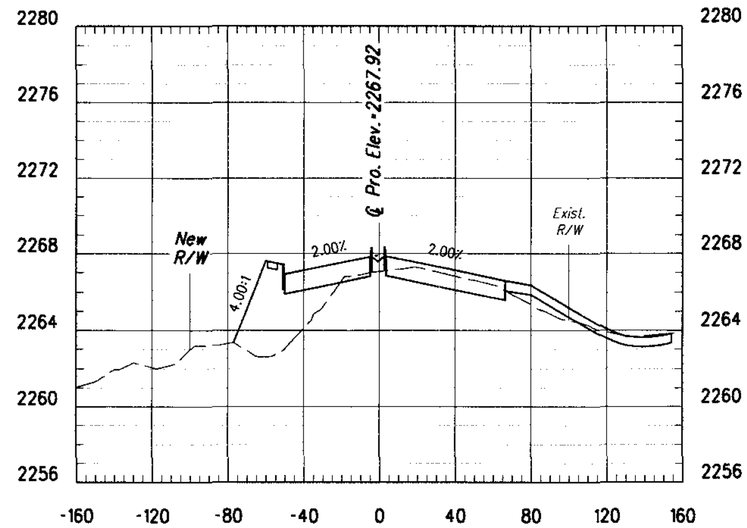

83+00

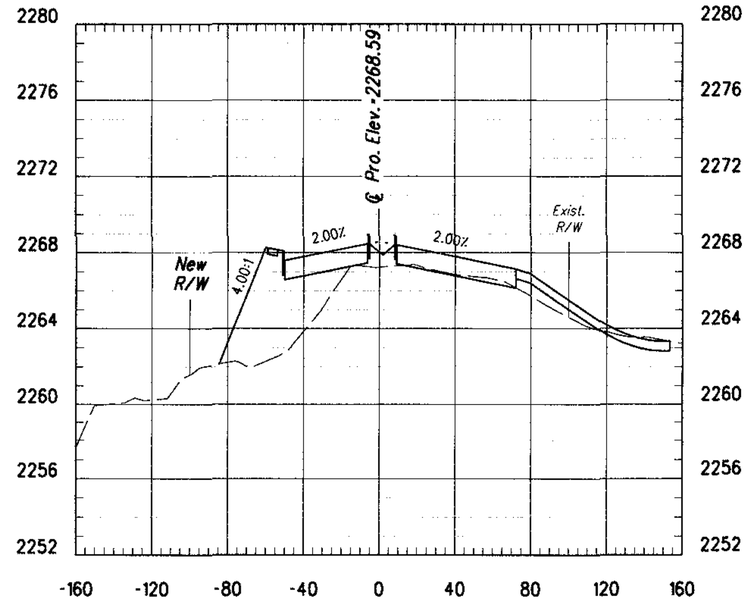

82+69

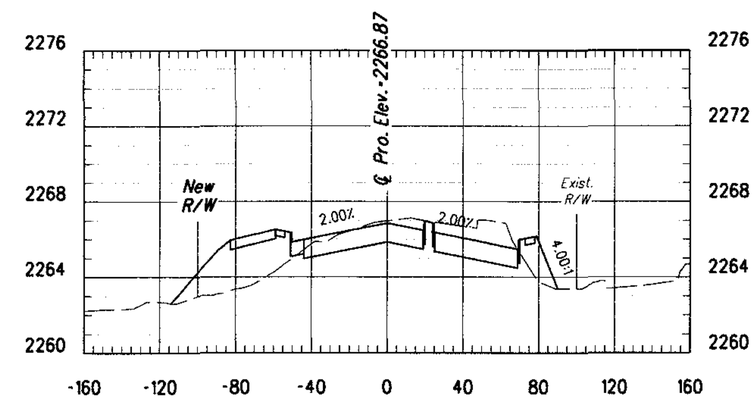

83+50

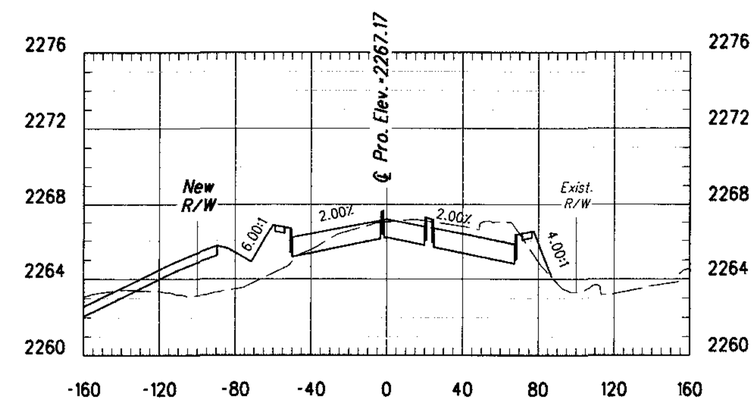

83+35

Sta 82+50 to Sta 83+50

40 0 40 80

Scales	Horiz. 1"=40' Vert. 1"=4'	Sheet XS25 of XS41 Page 340 of 356

012145
000000000059914
Pima_County_Dept_of_Transportation\PC001-La_Cholla_Blvd-Ruthrauff\13.00_CAD\Construction_Documents\Civil\26C-01.dgn

08\20\09 5:08:01 PM aledesma

Project • 4LCITR

LA CHOLLA BLVD. CROSS SECTIONS

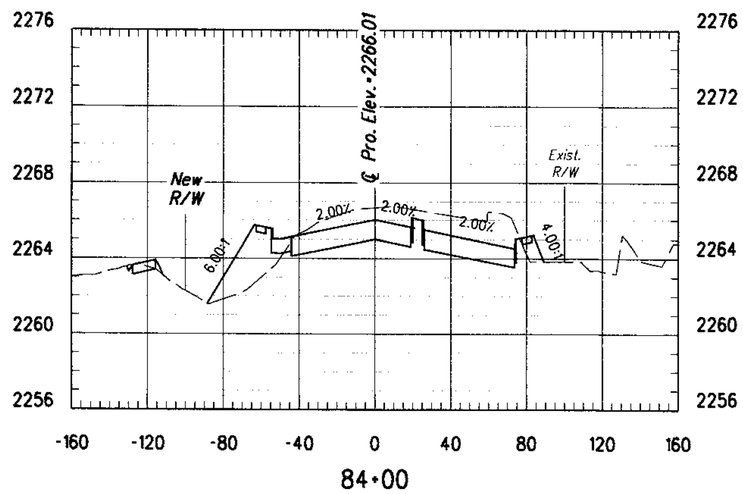

84+00

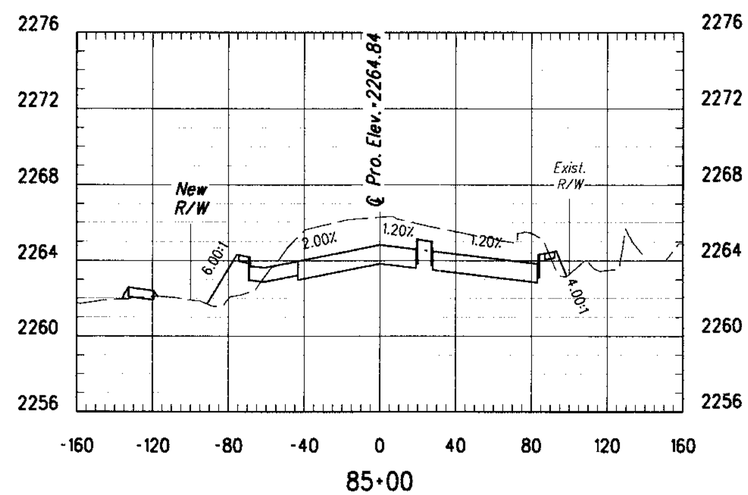

85+00

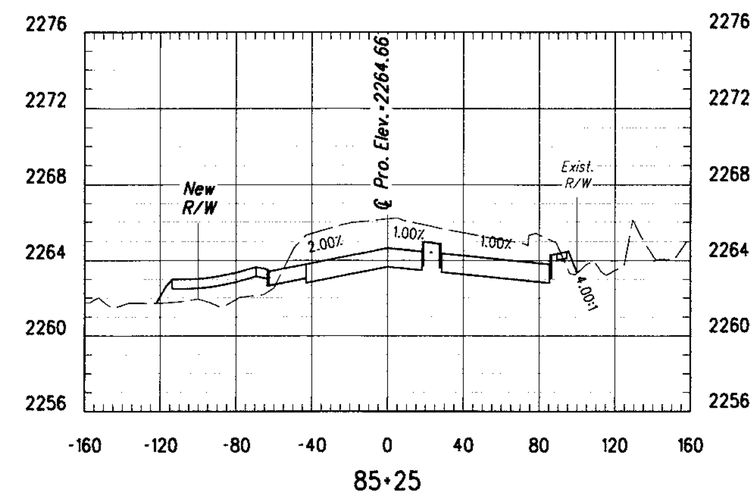

85+25

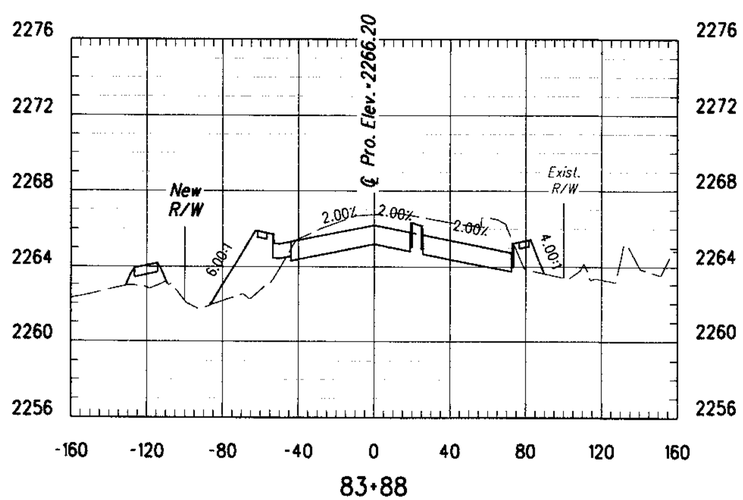

83+88

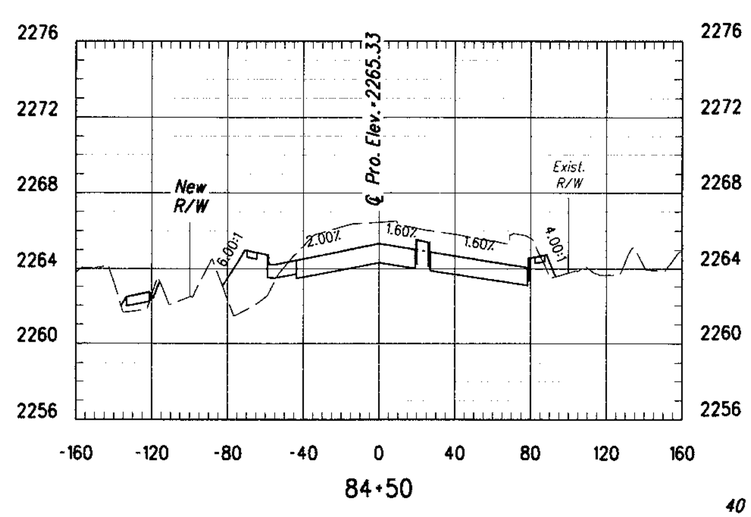

84+50

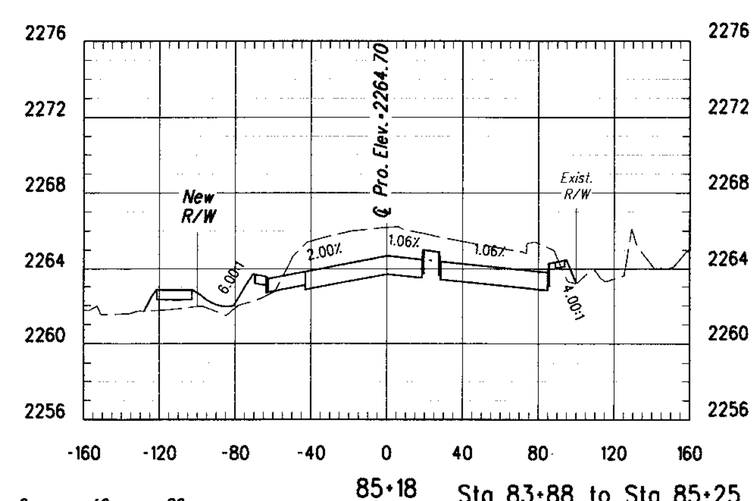

85+18

40 0 40 80

Sta 83+88 to Sta 85+25

Scales	Horiz. 1"=40' Vert. 1"=4'	Sheet XS26 of XS41 Page 341 of 356

012145
00000000005994
Pima_County_Dept._of_Transportation\PCDOT-La_Cholla_Blvd-Ruthrauff\13.00_CAD\Construction_Documents\Civil\26C-01.dgn

08\20\09 5:08:02 PM aledesma

Project • 4LCITR

LA CHOLLA BLVD. CROSS SECTIONS

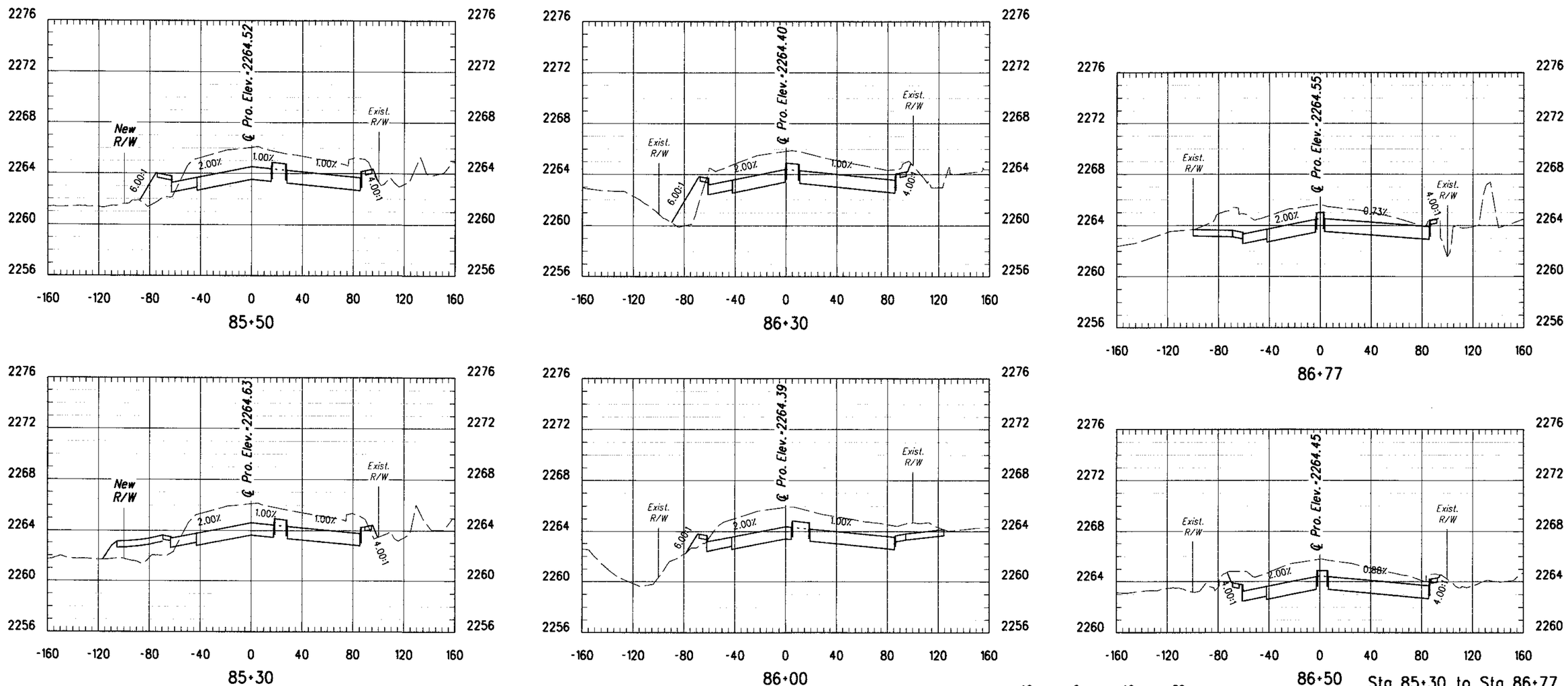

Sta 85+30 to Sta 86+77

Scales	Horiz. 1"=40' Vert. 1"=4'	Sheet XS27 of XS41 Page 342 of 356

012145
0000000000059914
Pima_County_Dept_of_Transportation\PCDOT-La_Cholla_Blvd-Ruthrauff\13.00_CAD\Construction_Documents\Civil\26C-01.dgn

08\20\09 5:08:03 PM oledesma

Project • 4LCITR

LA CHOLLA BLVD. CROSS SECTIONS

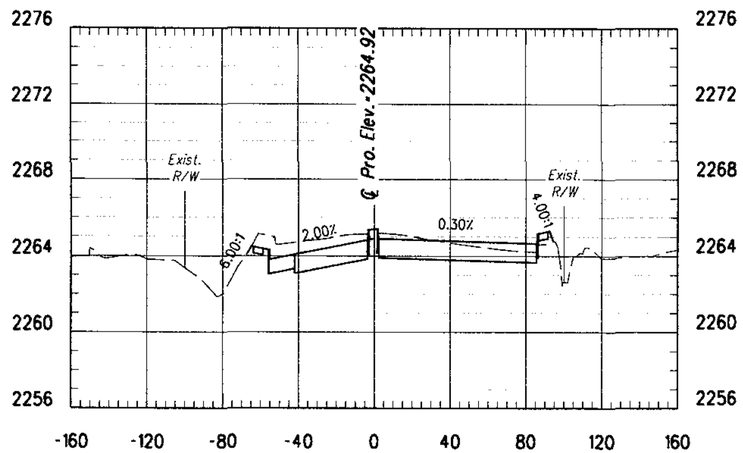

87+50

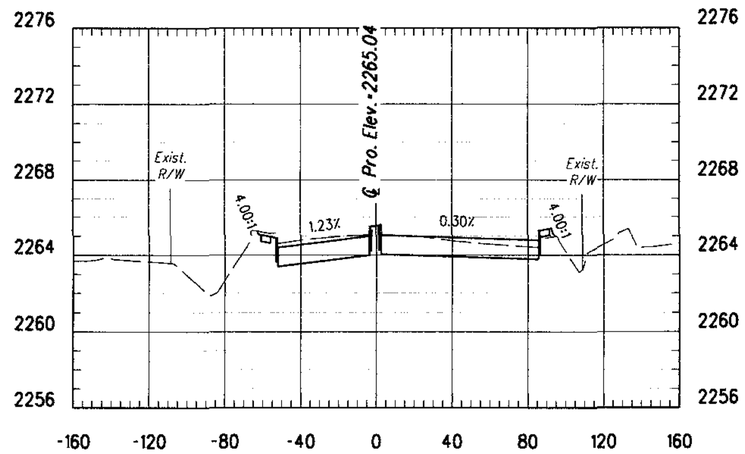

88+00

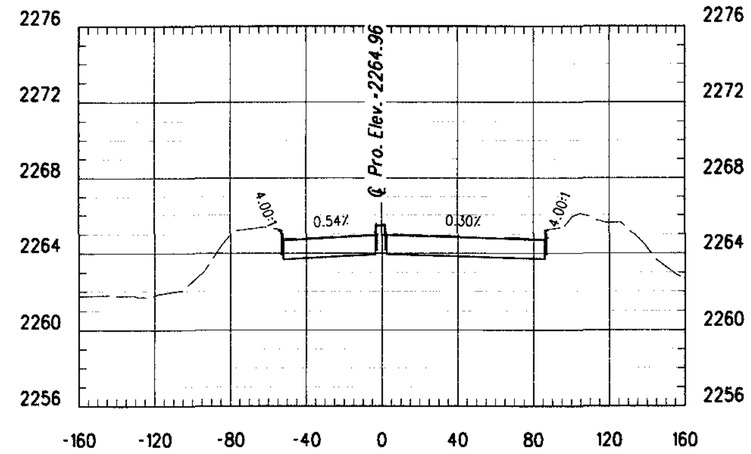

88+45

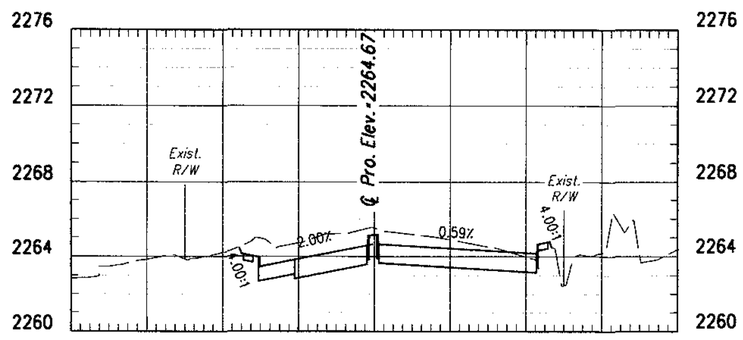

87+00

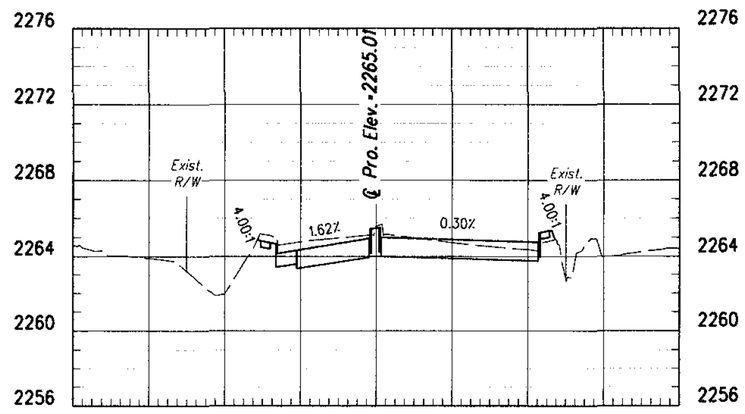

87+75

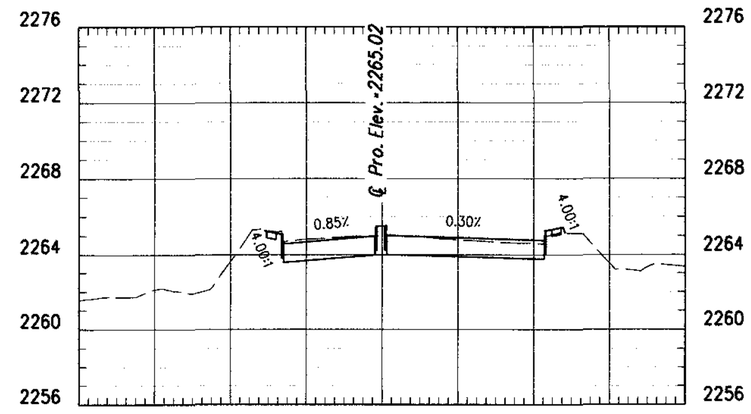

88+25

Sta 87+00 to Sta 88+45

40 0 40 80

Scales	Horiz. 1"=40' Vert. 1"=4'	Sheet XS28 of XS41 Page 343 of 356

012145
0000000000059914
Pima_County_Dept_of_Transportation\PCDOT-La_Cholla_Blvd-Ruthrauff\13.00_CAD\Construction_Documents\Civil\26C-01.dgn

08\20\09 5:08:04 PM aledesma

Project # 4LCITR

RUTHRAUFF RD. CROSS SECTIONS

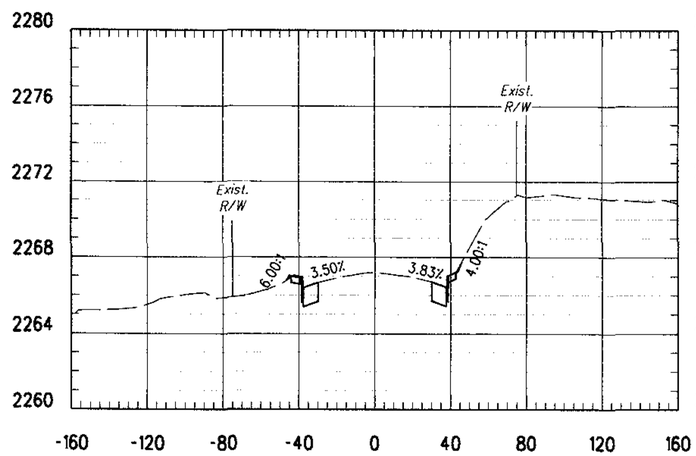

89+35

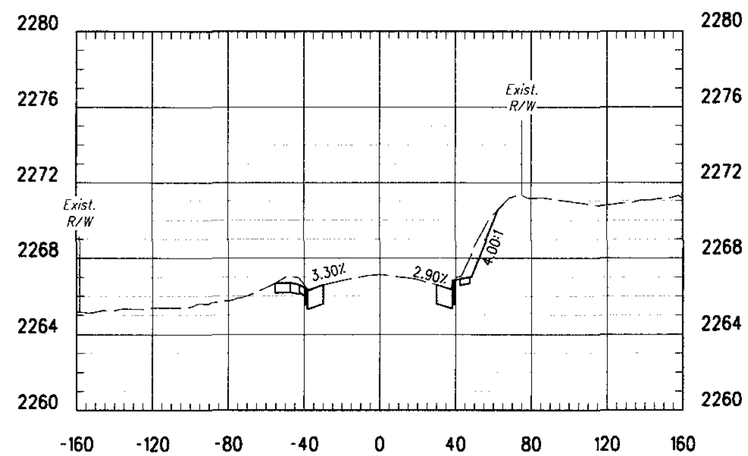

89+70

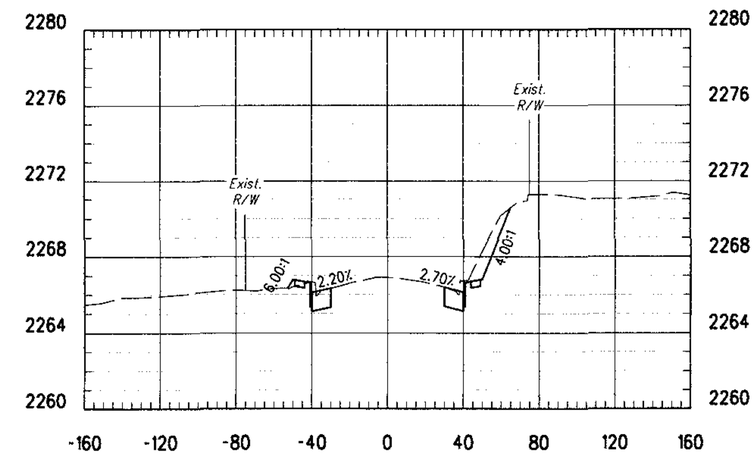

90+50

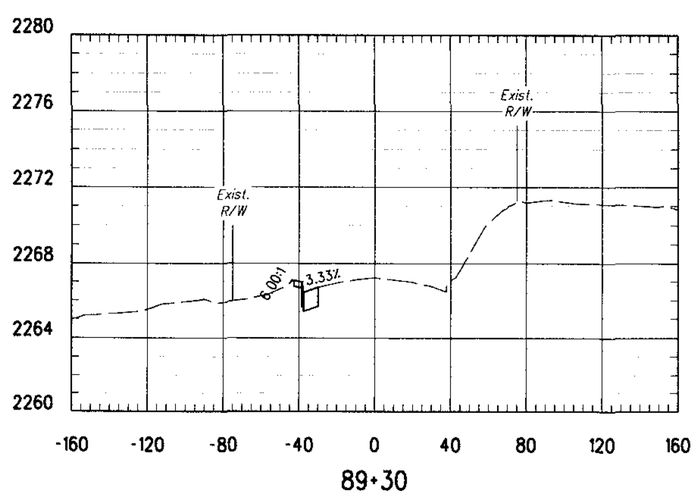

89+30

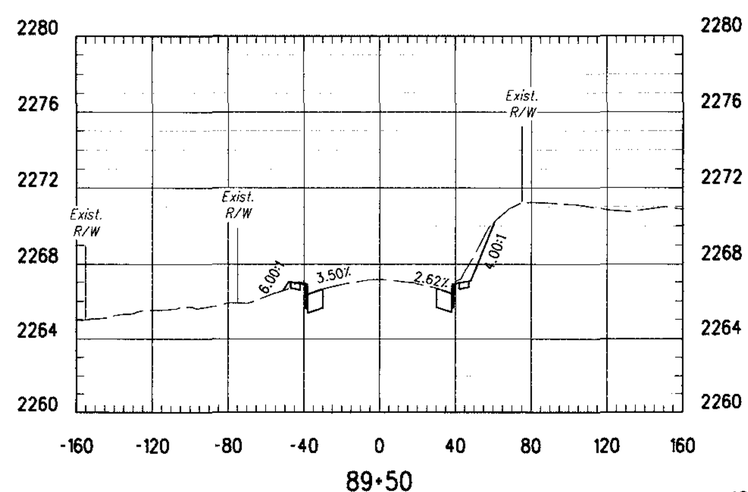

89+50

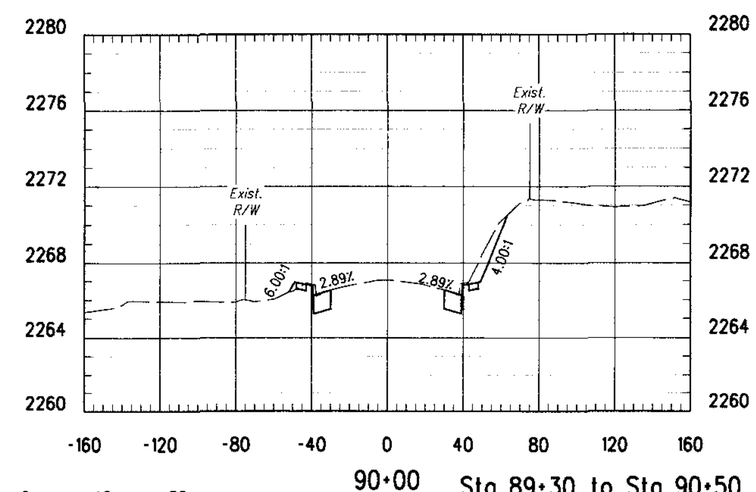

90+00

Sta 89+30 to Sta 90+50

40 0 40 80

Scales	Horiz. 1"=40'	Sheet XS29 of XS41 Page 344 of 356
	Vert. 1"=4'	

012145
0000000000059914
Pima_County_Dept._of_Transportation\PCDOT-La_Challa_Bird-Ruthrauff\13.00_CAD\Construction_Documents\Civil\26C-02.dgn
08\20\09 5:08:08 PM aledesma

RUTHRAUFF RD. CROSS SECTIONS

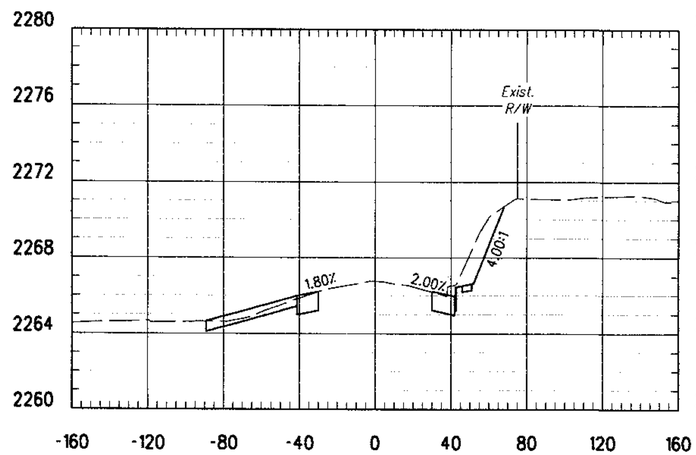

91+10

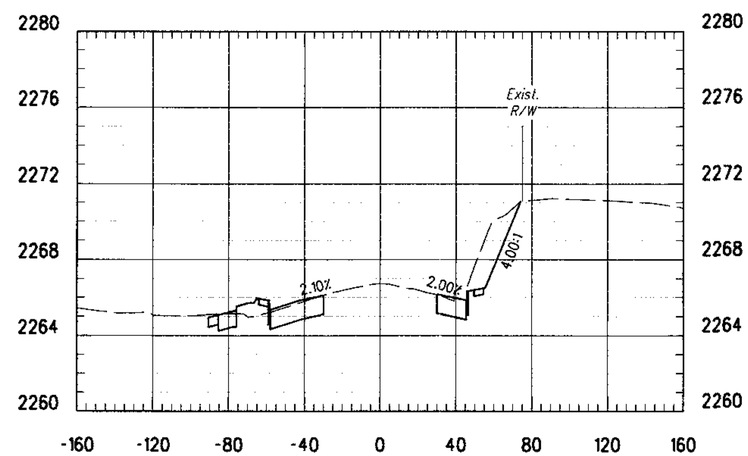

91+50

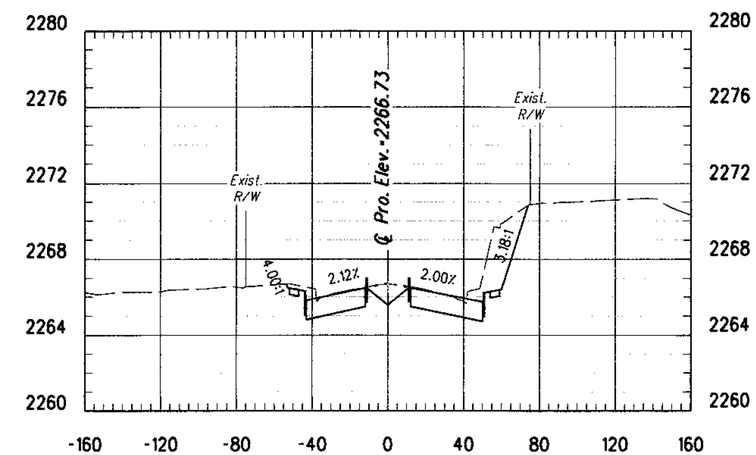

92+00

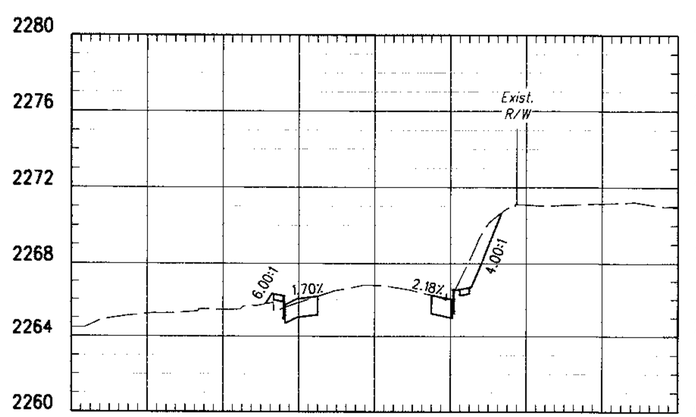

91+00

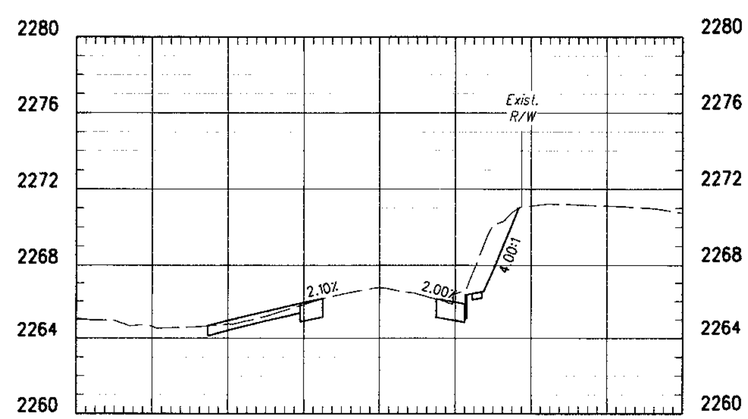

91+45

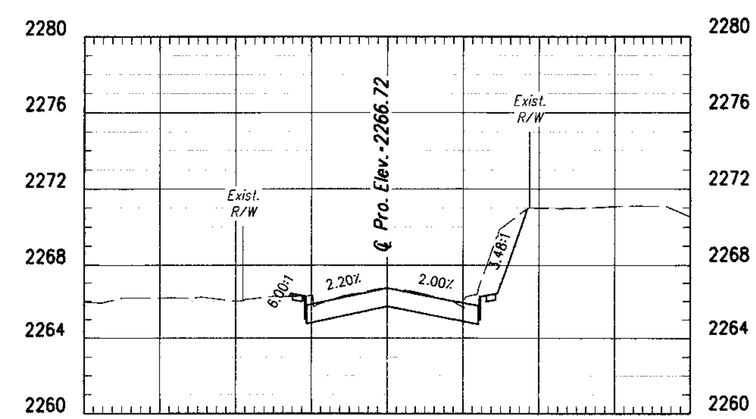

91+80

Sta 91+00 to Sta 92+00

40 0 40 80

Scales	Horiz. 1"=40'	Sheet XS30 of XS41 Page 345 of 356
	Vert. 1"=4'	

Project • 4LCITR

012145
00000000000059914
Pima_County_Dept._of_Transportation\PCDOT-La_Cholla_Blvd-Ruthrauff\13.00_CAD\Construction_Documents\Civil\26C-02.dgn
08\20\09 5:08:08 PM aledesma

RUTHRAUFF RD. CROSS SECTIONS

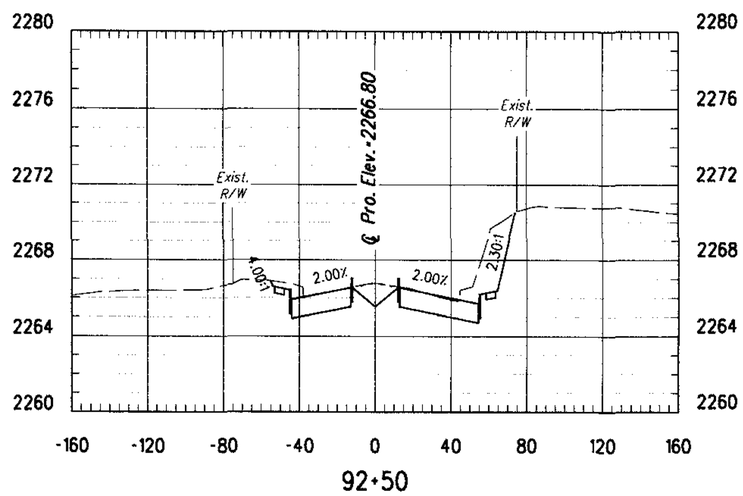

92+50

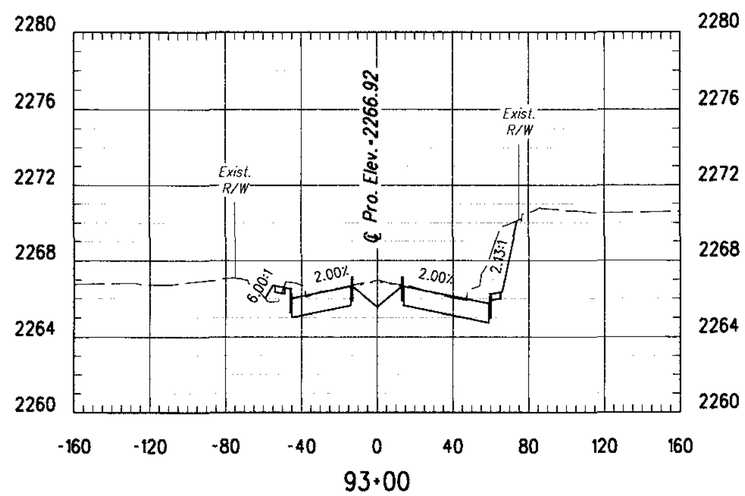

93+00

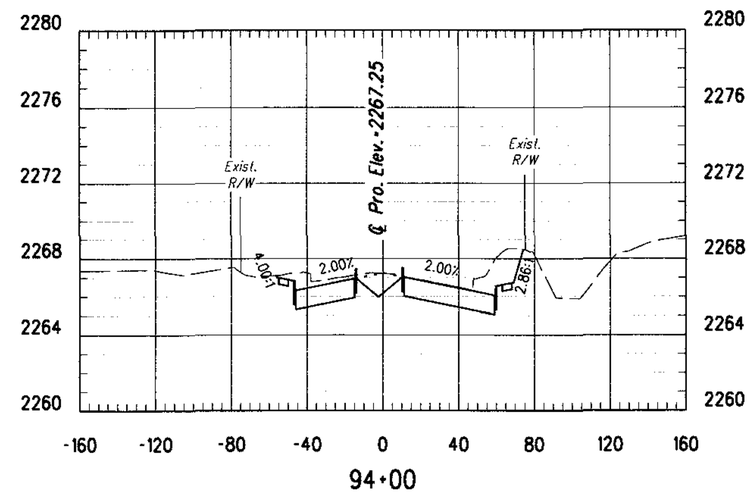

94+00

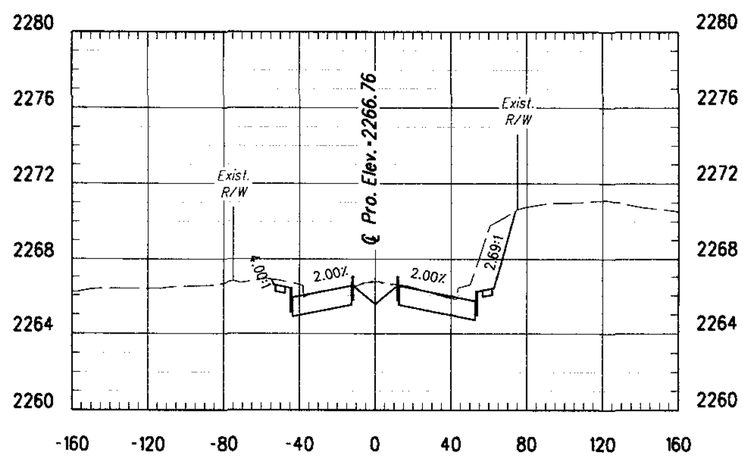

92+30

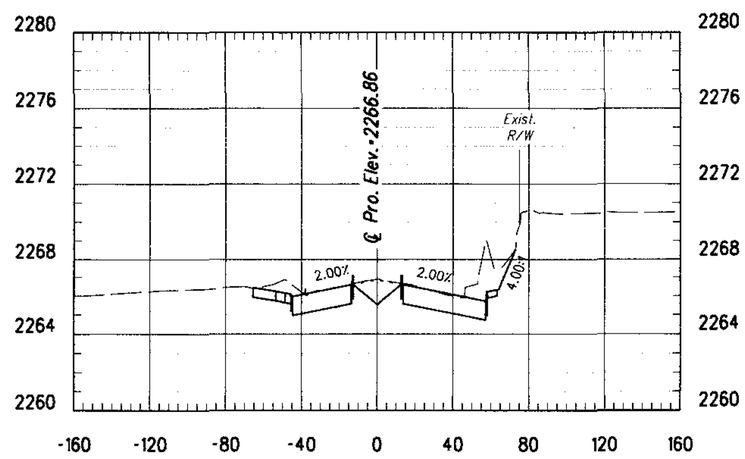

92+80

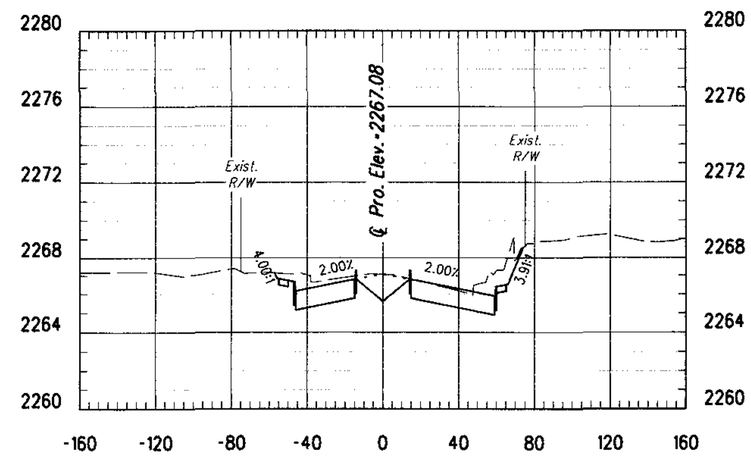

93+50

Sta 92+30 to Sta 94+00

40 0 40 80

Scales	Horiz. 1"=40' Vert. 1"=4'	Sheet XS31 of XS41 Page 346 of 356

012145
0000000000059914
Pima_County_Dept._of_Transportation\PCDOT-to_Chalfa_Blvd-Ruthrauff\13.00_CAD\Construction_Documents\Civil\26C-02.dgn

08\20\09 5:08:09 PM aledesma

Project • 4LCITR

RUTHRAUFF RD. CROSS SECTIONS

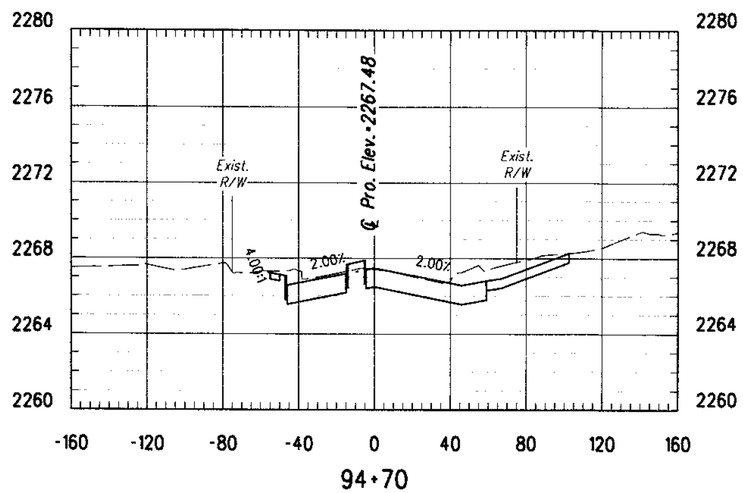

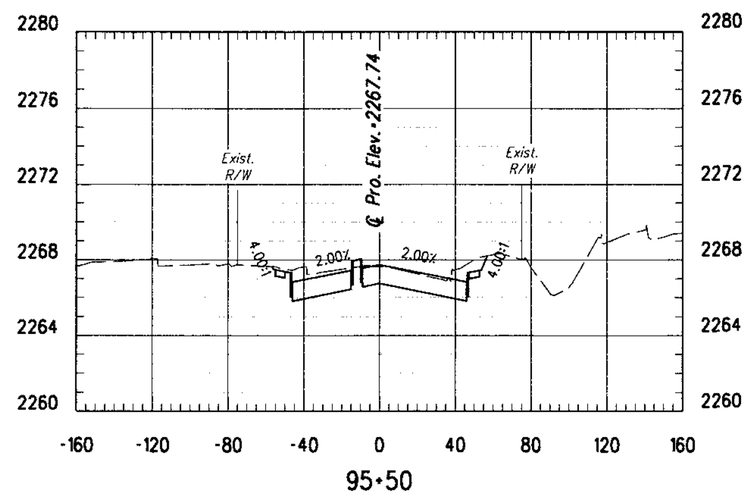

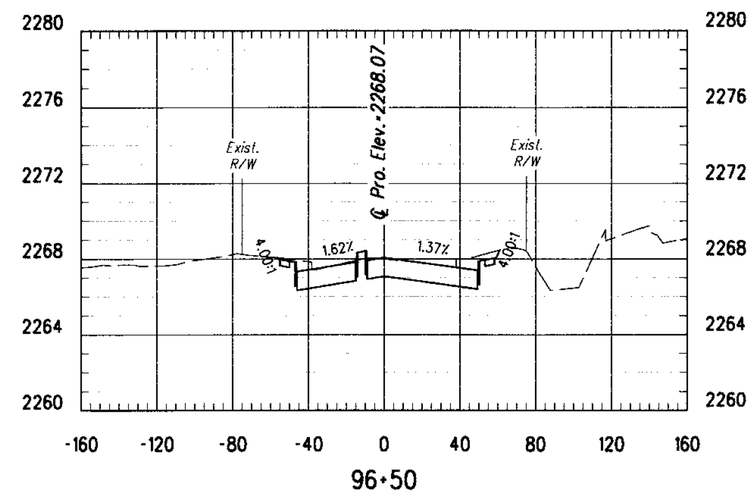

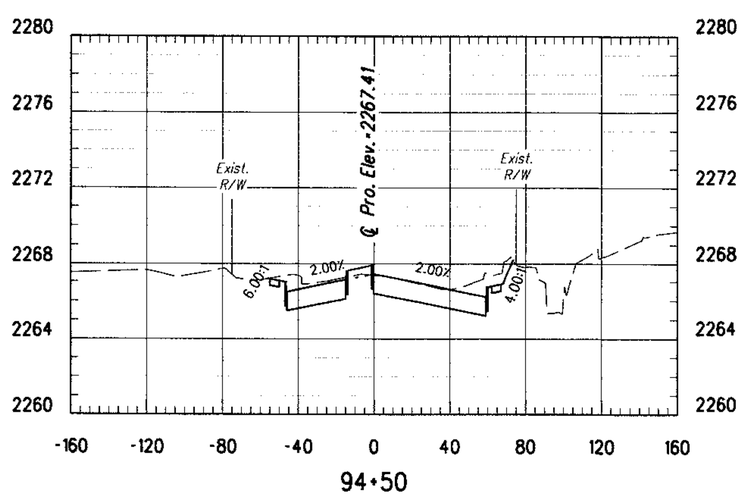

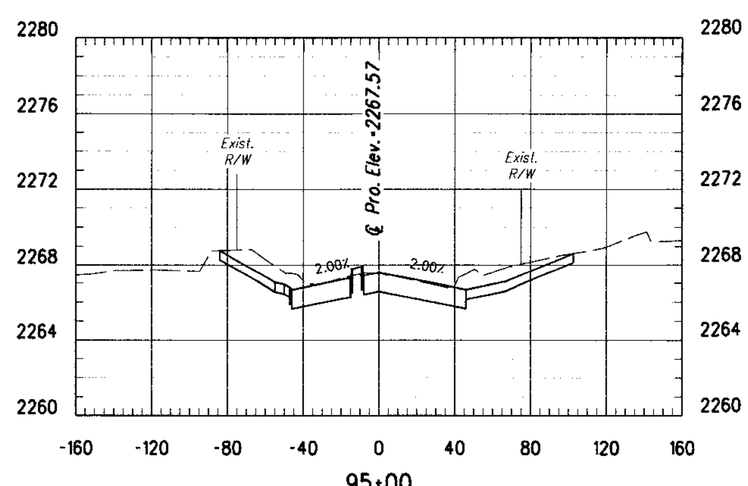

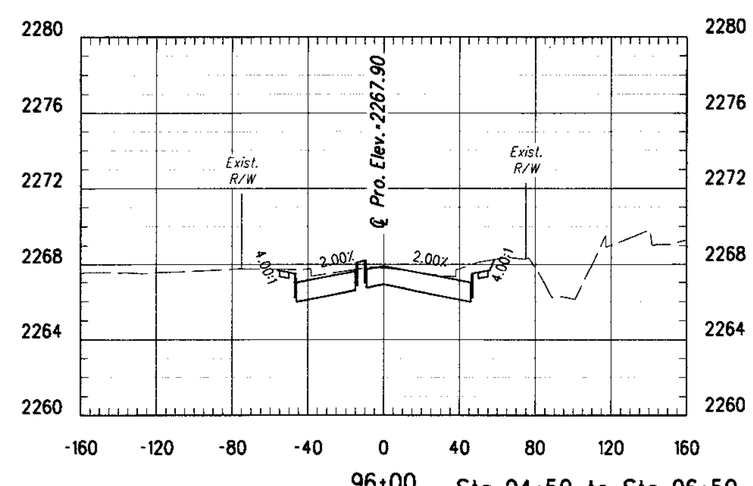

Sta 94+50 to Sta 96+50

40 0 40 80

Scales	Horiz. 1"=40'	Sheet XS32 of XS41 Page 347 of 356
	Vert. 1"=4'	

Project • 4LCITR

012145
000000000059914
Pima_County_Dept_of_Transportation\PCDOT-La_Cholla_Blvd-Ruthrauff\13.00_CAD\Construction_Documents\Civil\26C-02.dgn

08\20\09 5:08:10 PM aledesma

RUTHRAUFF RD. CROSS SECTIONS

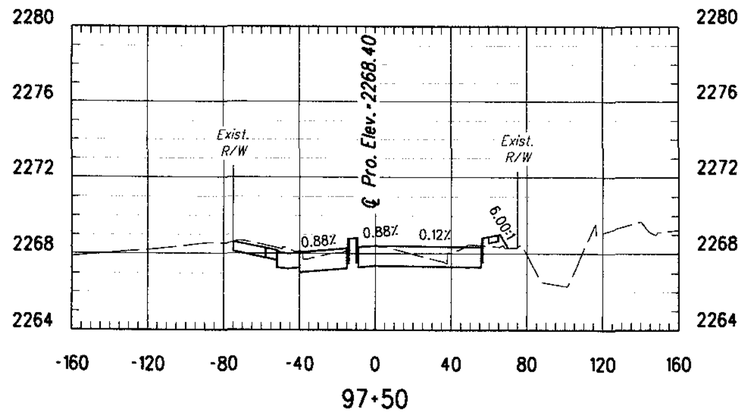

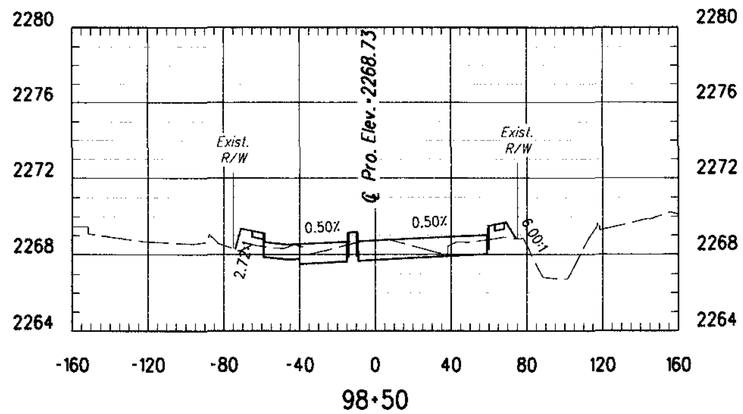

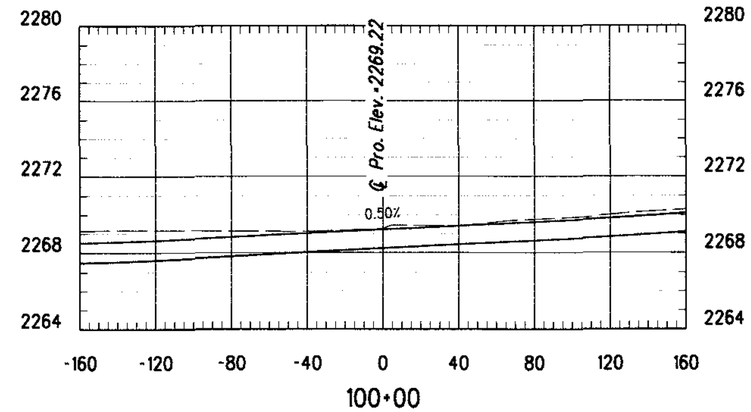

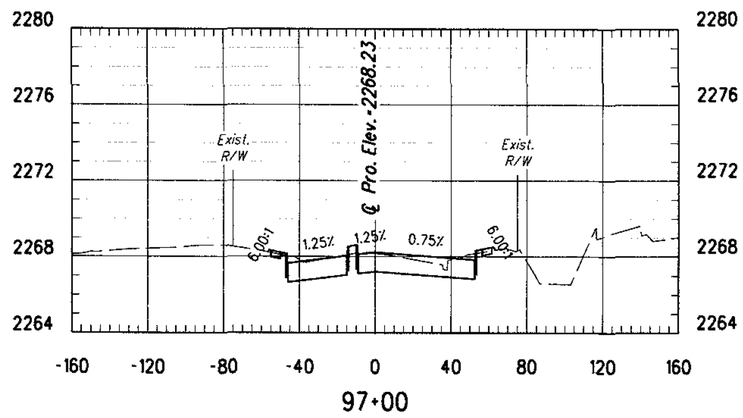

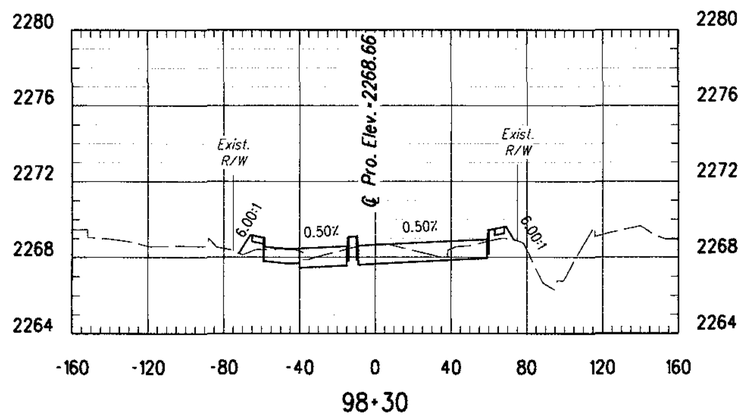

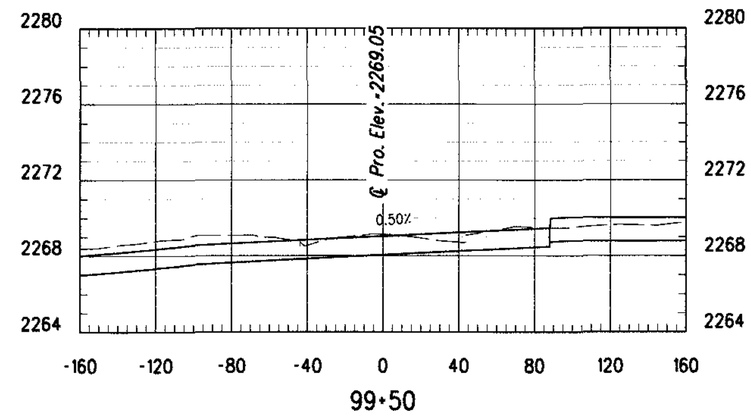

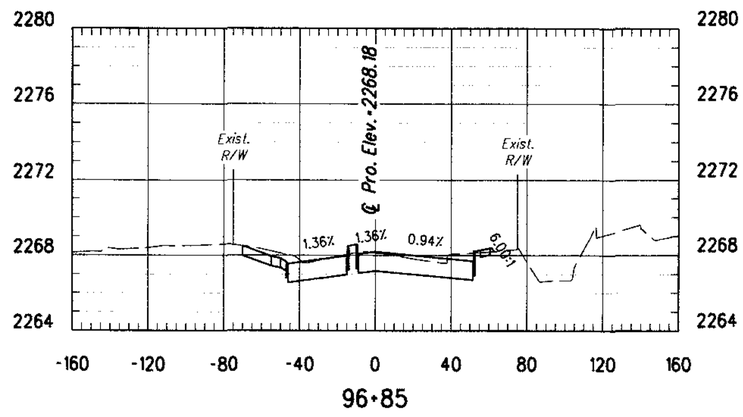

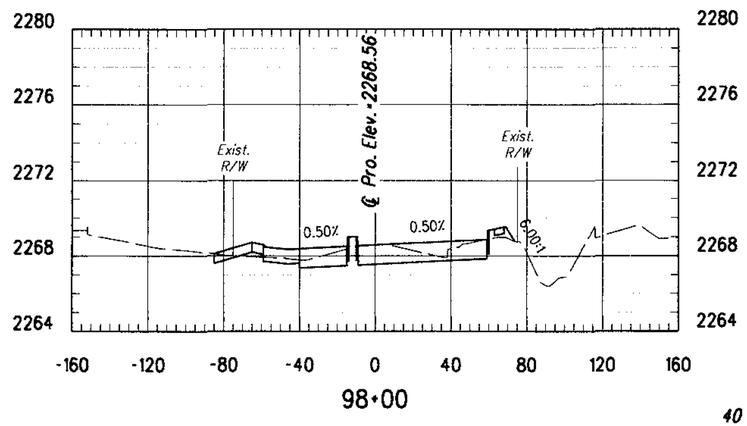

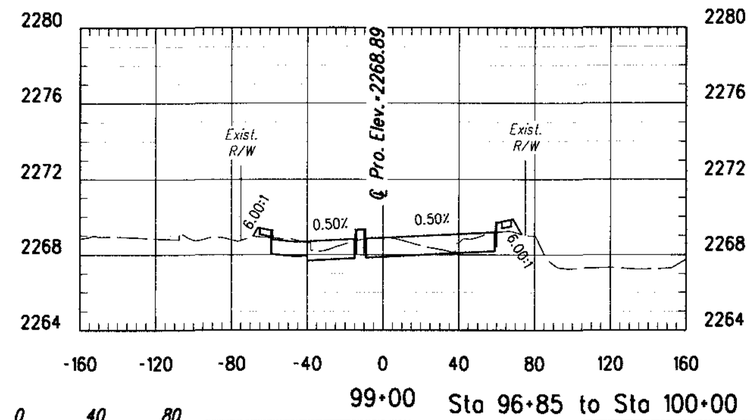

Sta 96+85 to Sta 100+00

40 0 40 80

Scales	Horiz. 1"=40' Vert. 1"=4'	Sheet XS33 of XS41 Page 348 of 356

012145
0000000000059914
Pima_County_Dept_of_Transportation\PCDOT-La_Cholla_Blvd-Ruthrauff\13.00_CAD\Construction_Documents\Civil\26C-02.dgn

08\20\09 5:08:11 PM aledesma

Project • 4LCITR

RUTHRAUFF RD. CROSS SECTIONS

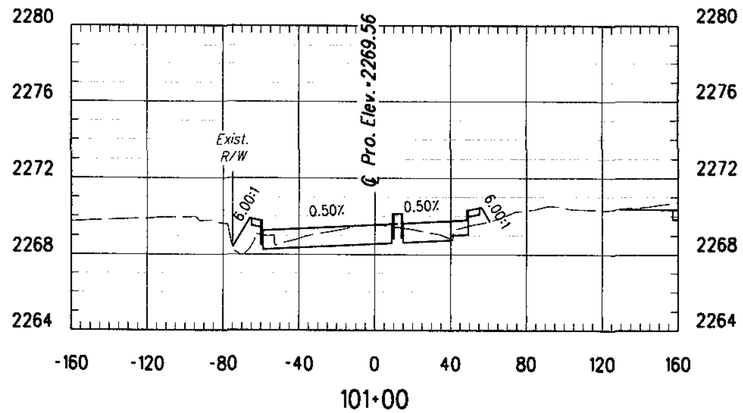

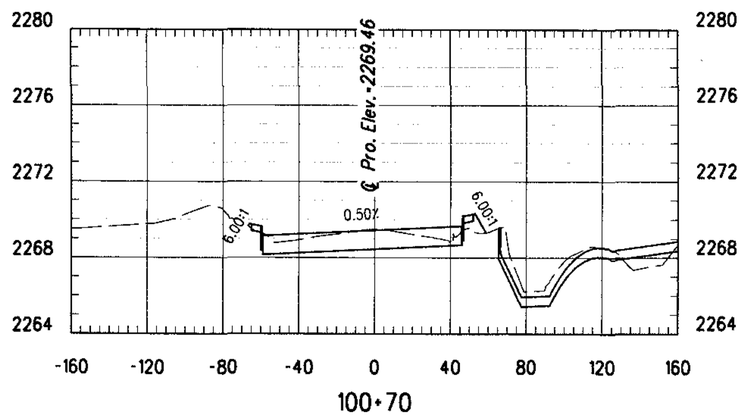

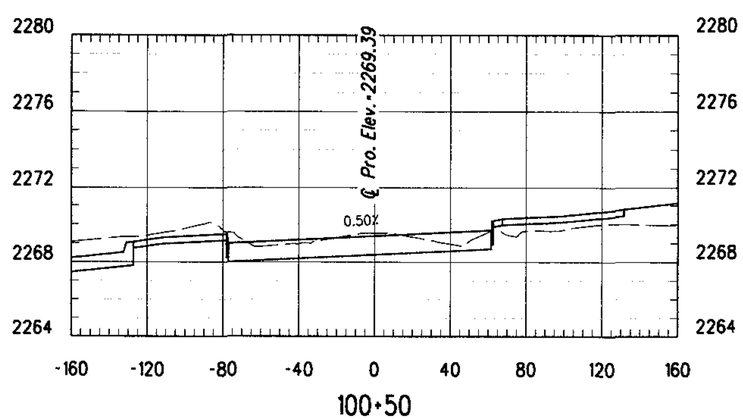

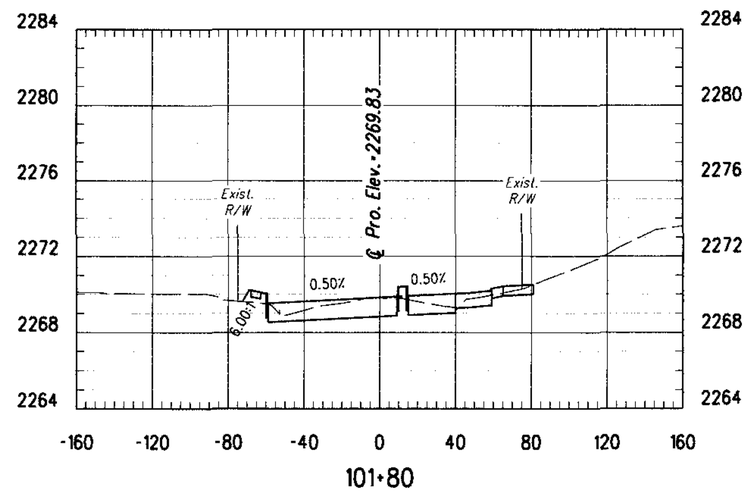

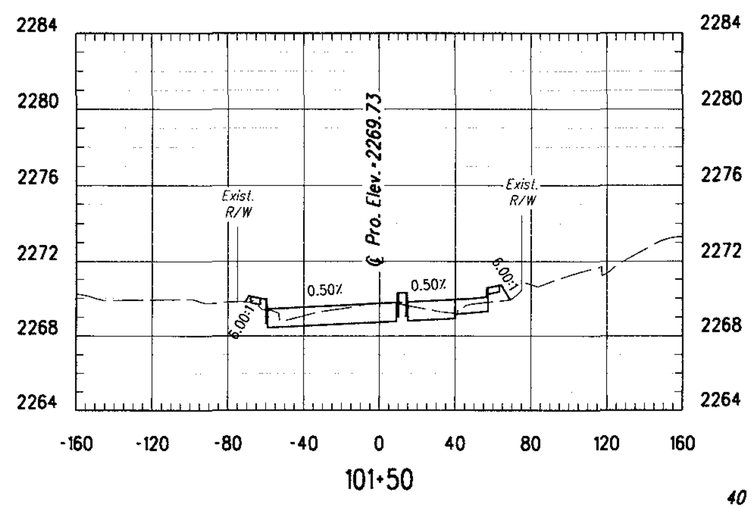

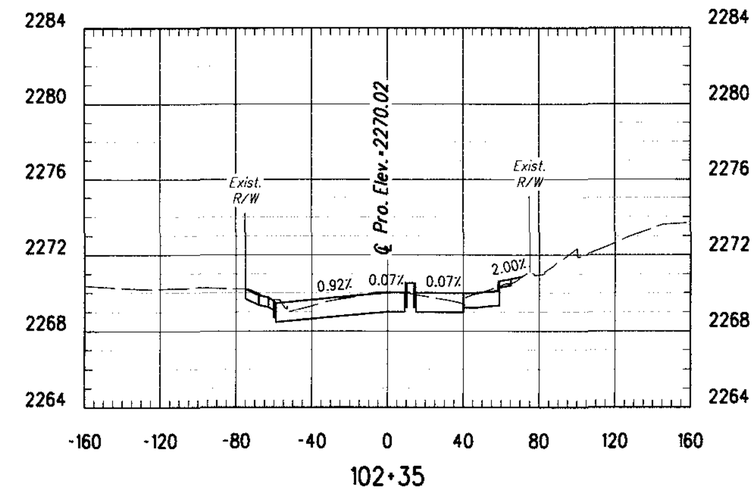

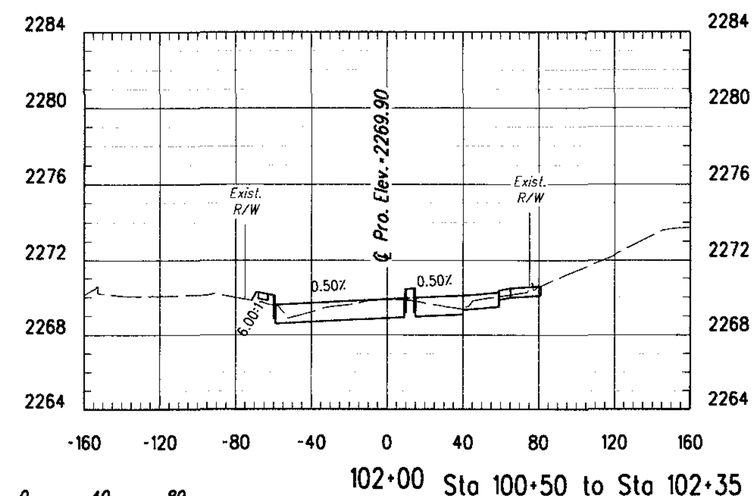

Sta 100+50 to Sta 102+35

40 0 40 80

Scales	Horiz. 1"=40' Vert. 1"=4'	Sheet XS34 of XS41 Page 349 of 356

RUTHRAUFF RD. CROSS SECTIONS

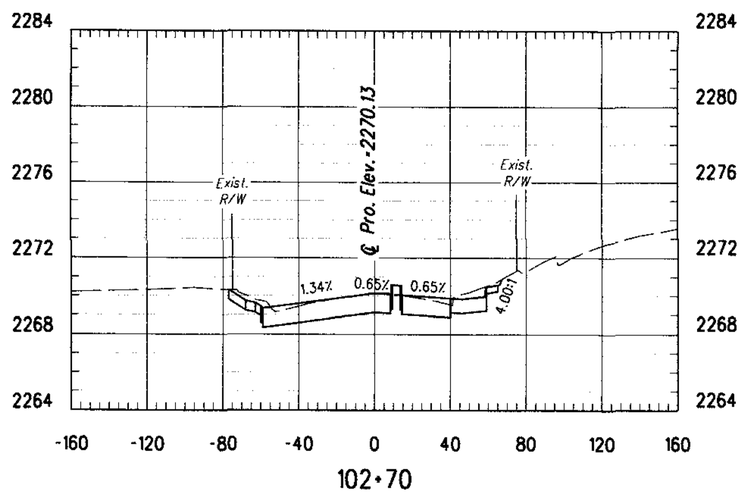

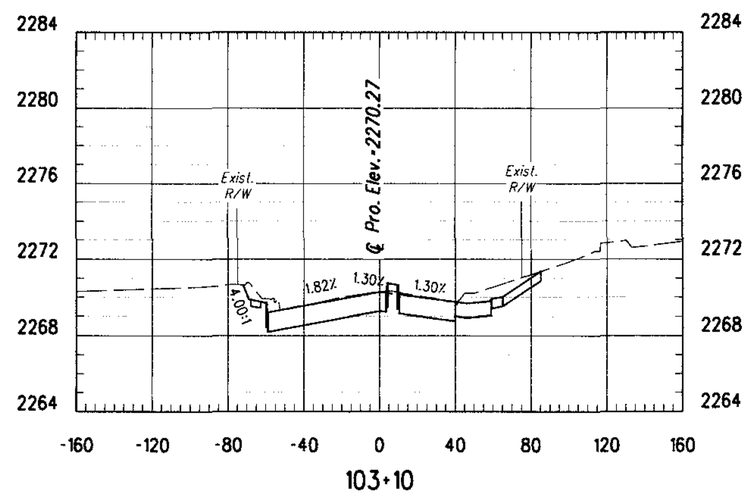

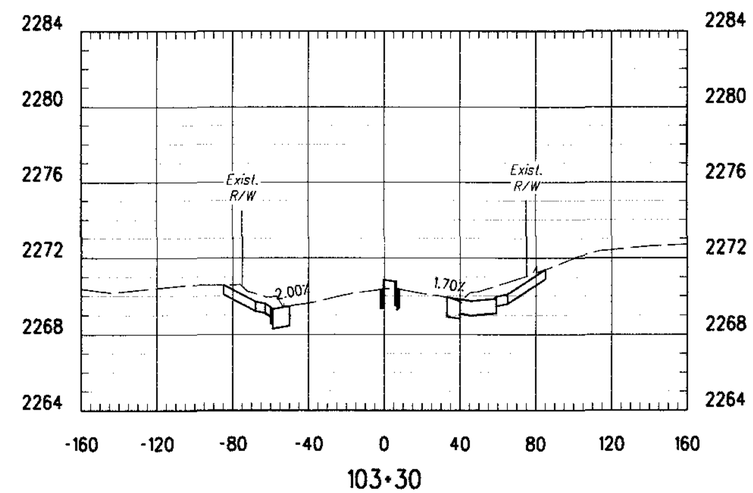

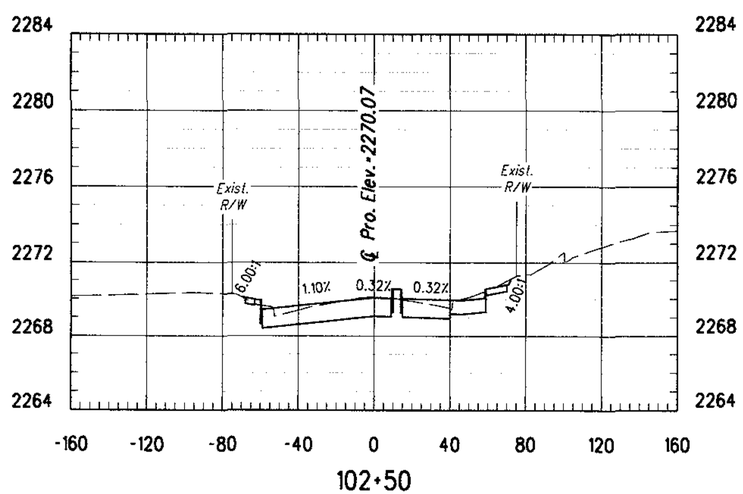

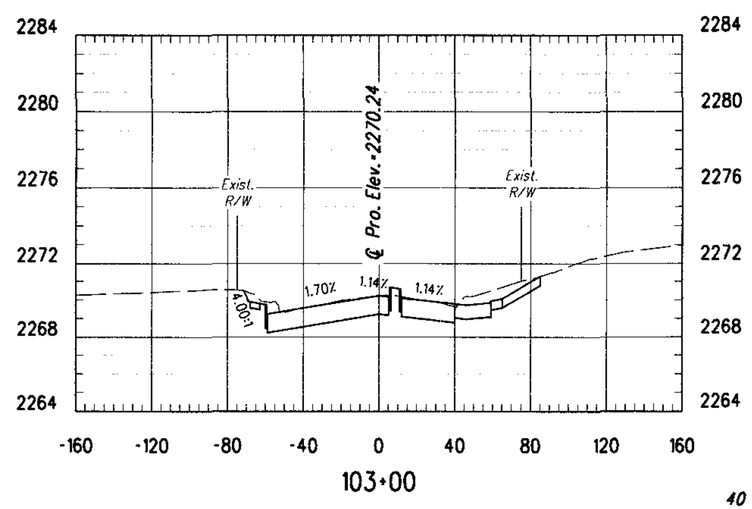

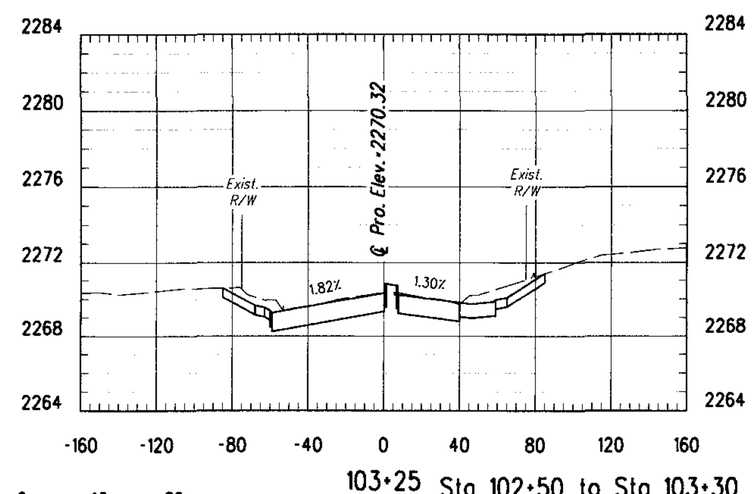

Sta 102+50 to Sta 103+30

40 0 40 80

Scales	Horiz. 1"=40' Vert. 1"=4'	Sheet XS35 of XS41 Page 350 of 356

Project # 4LCITR

012145
0000000000059914
Pima_County_Dept_of_Transportation\PC001-Ls_Cholla_Blvd-Ruthrauff\13.00_CAD\Construction_Documents\Civil\26C-02.dgn

08\20\09 5:08:13 PM aledesma

RUTHRAUFF RD. CROSS SECTIONS

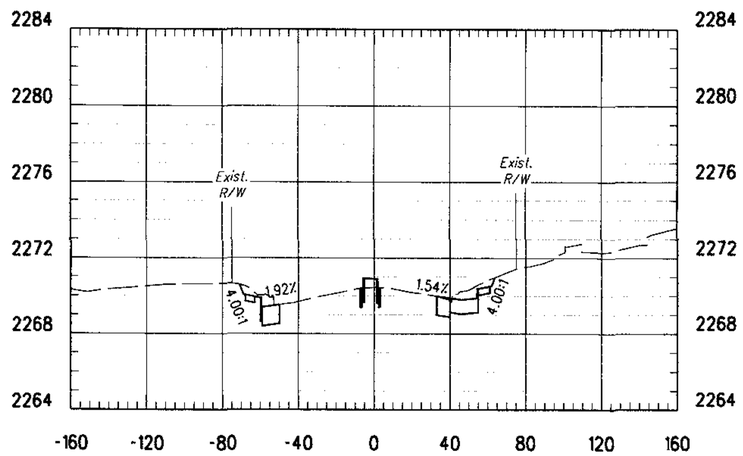

103+50

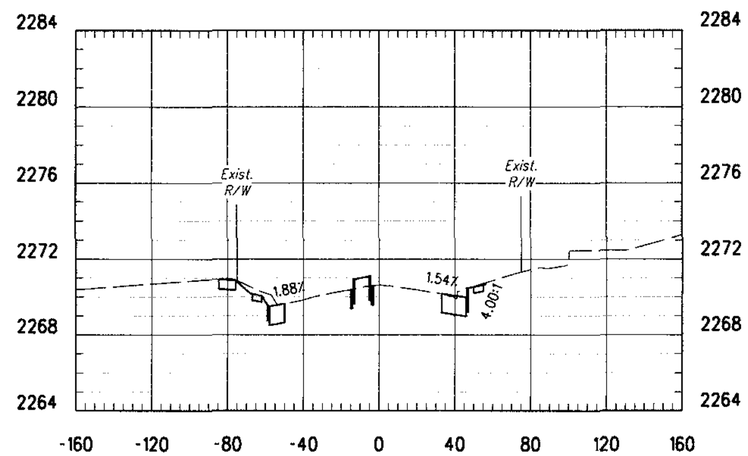

104+00

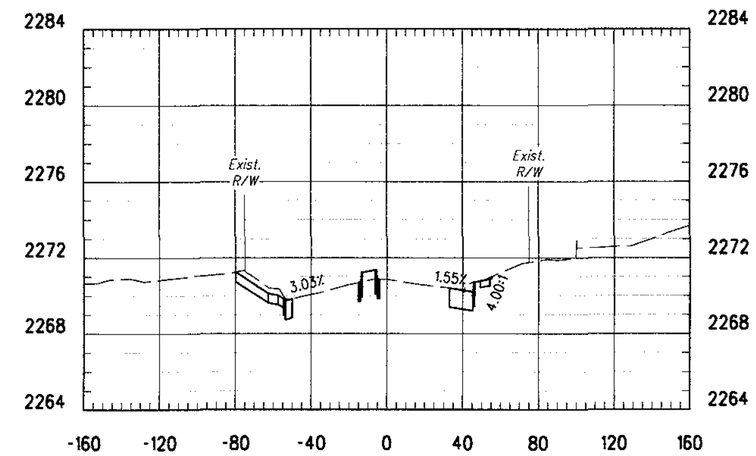

104+75

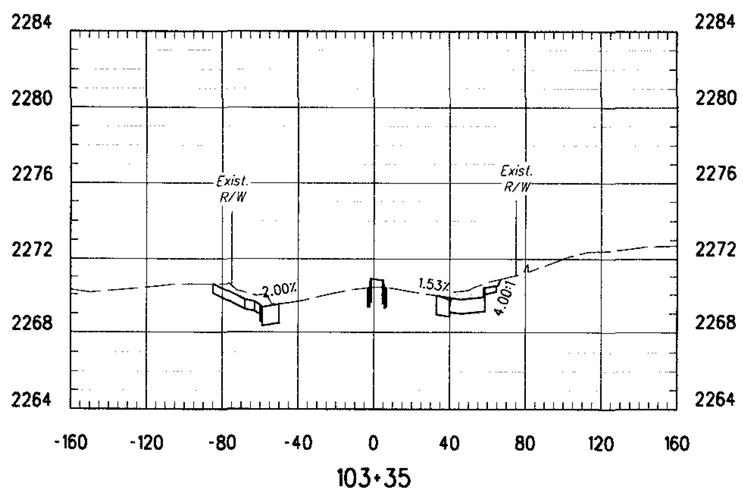

103+35

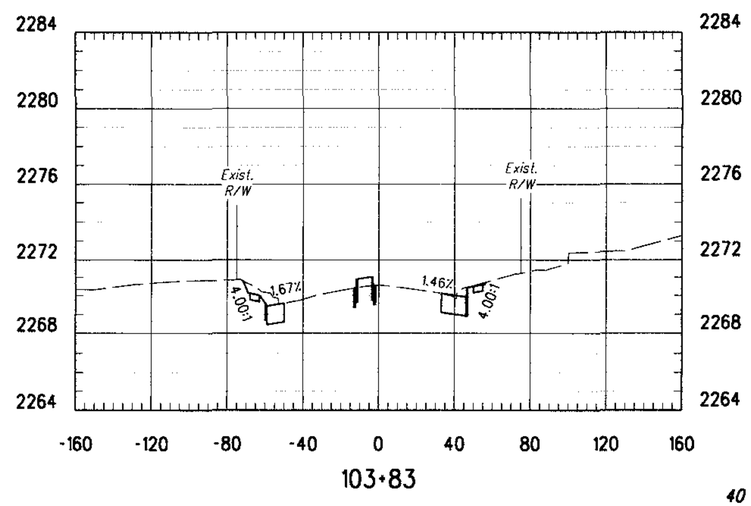

103+83

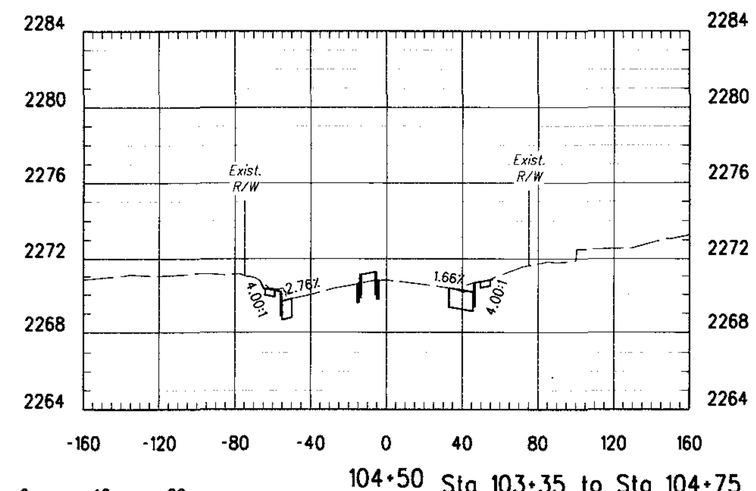

104+50

Sta 103+35 to Sta 104+75

40 0 40 80

Scales	Horiz. 1"=40' Vert. 1"=4'	Sheet XS36 of XS41 Page 351 of 356

012145
0000000000059914
Pima_County_Dept._of_Transportation\PCDOT-to_Cholla_Blvd-Ruthrauff\13.00_CAD\Construction_Documents\Civil\26C-02.dgn

08\20\09 5:08:14 PM oledesma

Project # 4LCITR

RUTHRAUFF RD. CROSS SECTIONS

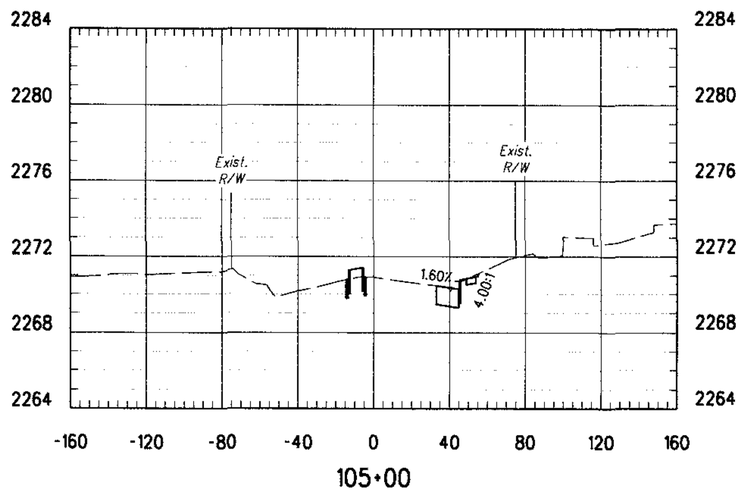

105+00

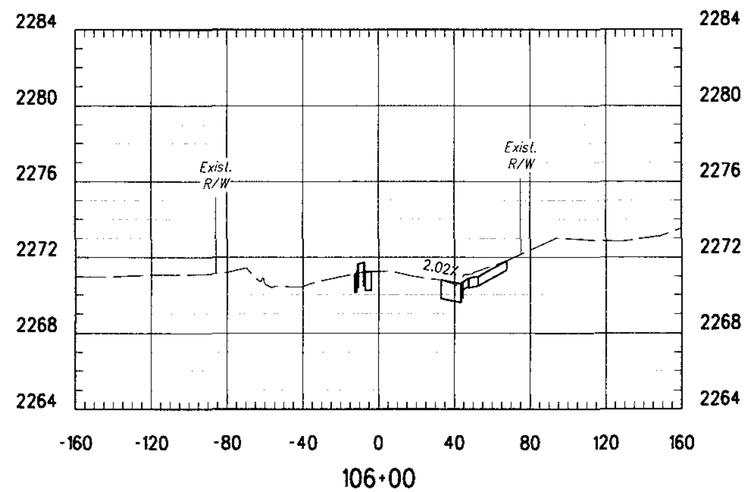

106+00

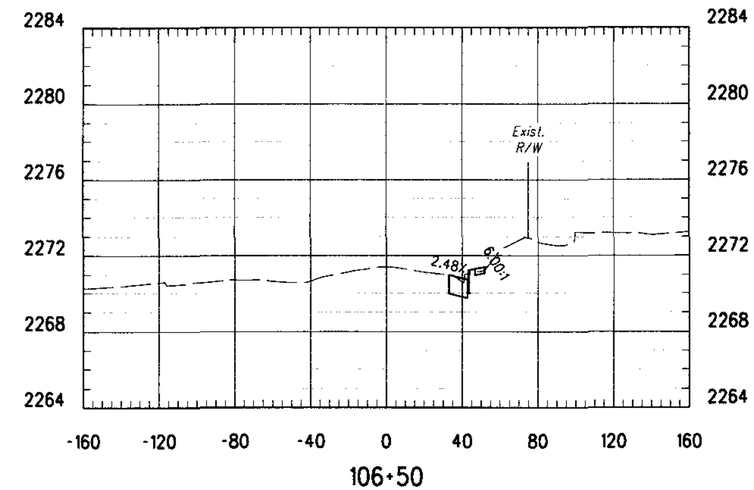

106+50

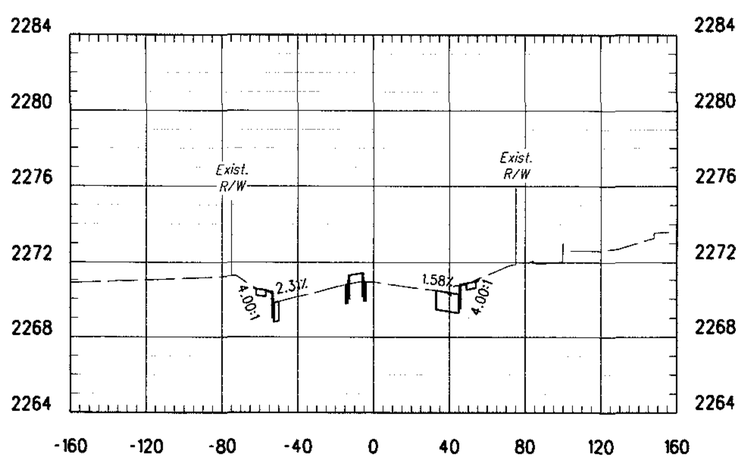

104+93

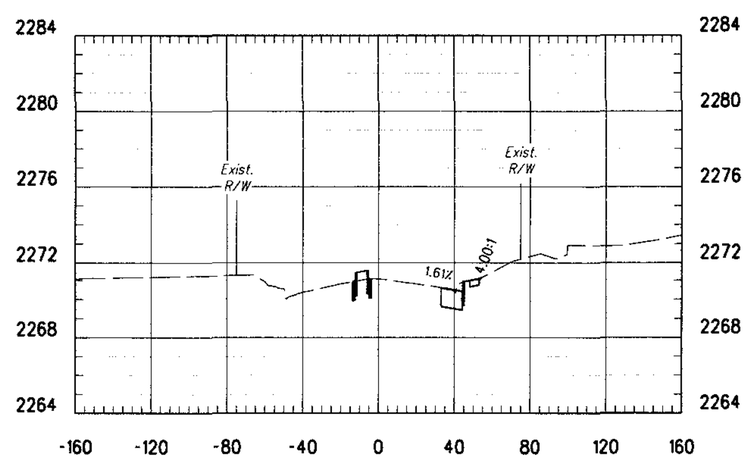

105+50

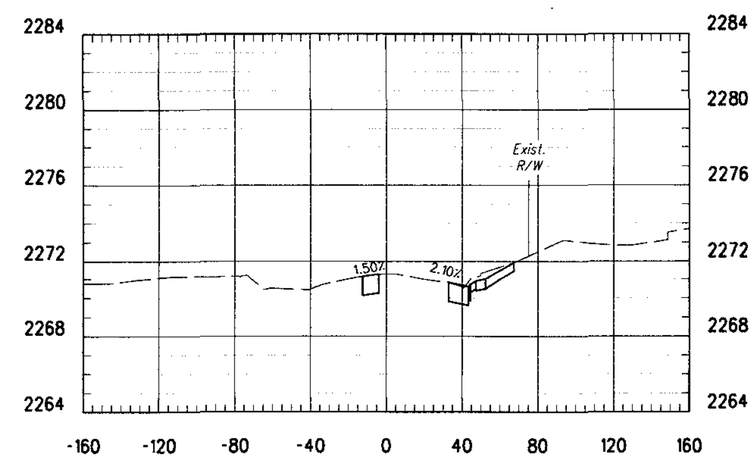

106+07

Sta 104+93 to Sta 106+50

40 0 40 80

Scales	Horiz. 1"=40' Vert. 1"=4'	Sheet XS37 of XS41 Page 352 of 356

012145
00000000000059914
Pima_County_Dept_of_Transportation\PCDOT-La_Cholla_Blvd-Ruthrauff\13.00_CAD\Construction_Documents\Civil\26C-02.dgn

08\20\09 5:08:14 PM oledesma

Project # 4LCITR

RUTHRAUFF RD. CROSS SECTIONS

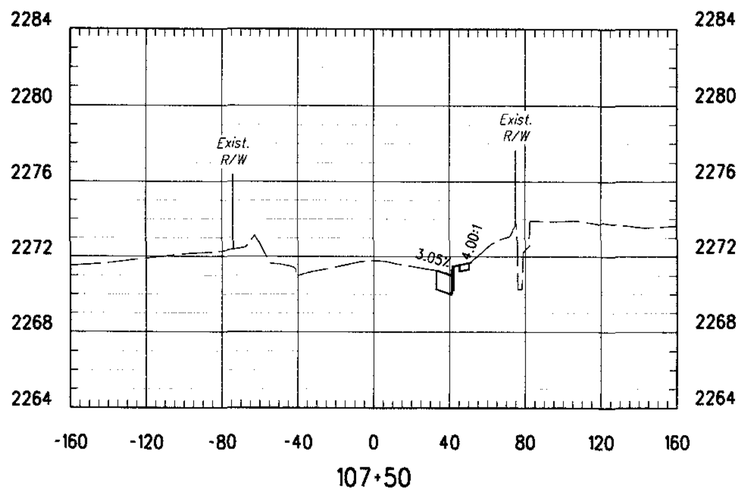

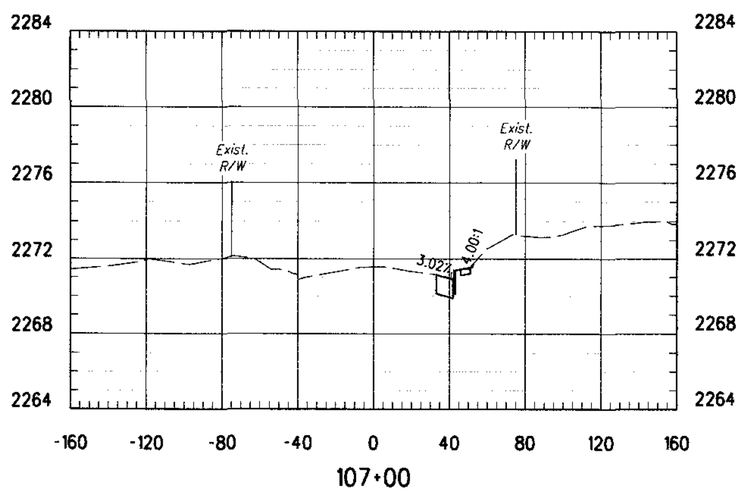

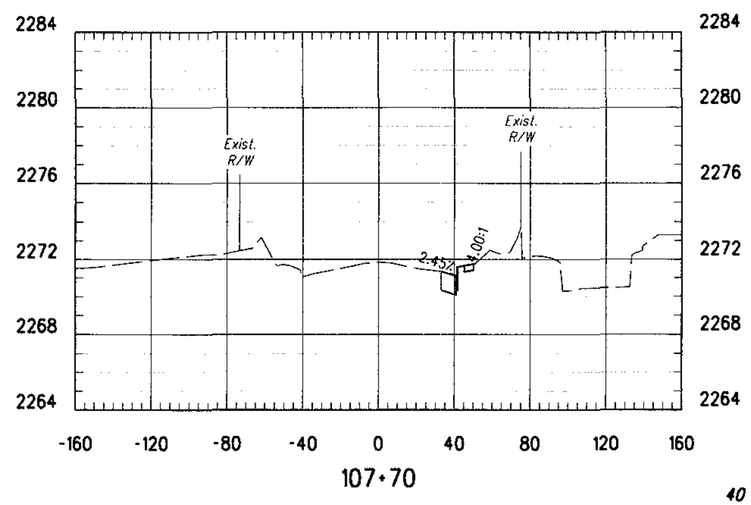

40 0 40 80

Sta 107+00 to Sta 107+70

Scales	Horiz. 1"=40'	Sheet XS38 of XS41 Page 353 of 356
	Vert. 1"=4'	

CURTIS RD. CROSS SECTIONS

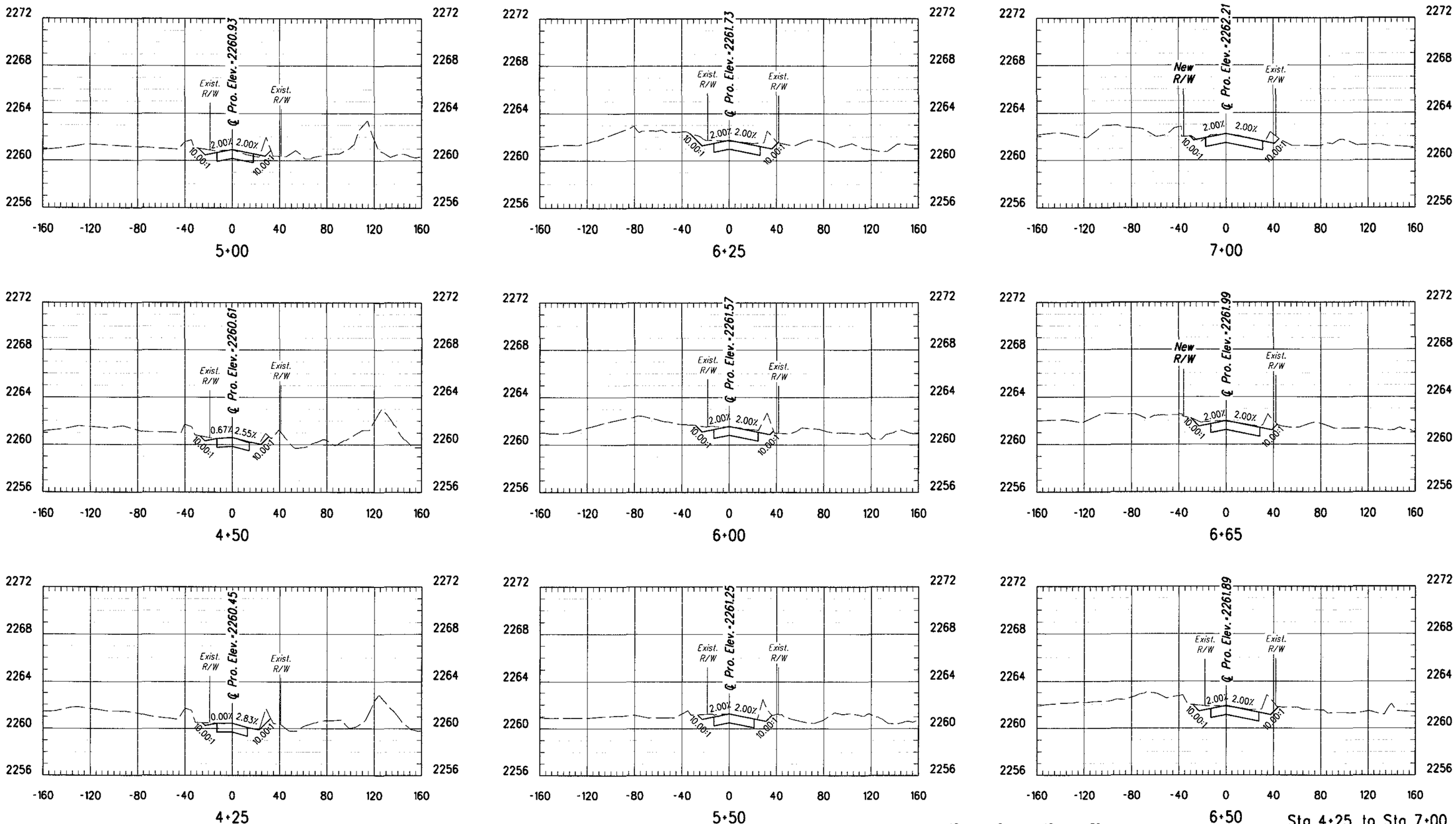

Sta 4+25 to Sta 7+00

Scales	Horiz. 1"=40' Vert. 1"=4'	Sheet XS39 of XS41 Page 354 of 356

012145
0000000000059914
Pima_County_Dept._of_Transportation\PCDOT-I-6_Chalio_Blvd-Ruthrauff\1.3.00_CAD\Construction_Documents\Civil\26C-03.dgn

08\20\09 5:08:18 PM aledesma

Project • 4LCITR

CURTIS RD. CROSS SECTIONS

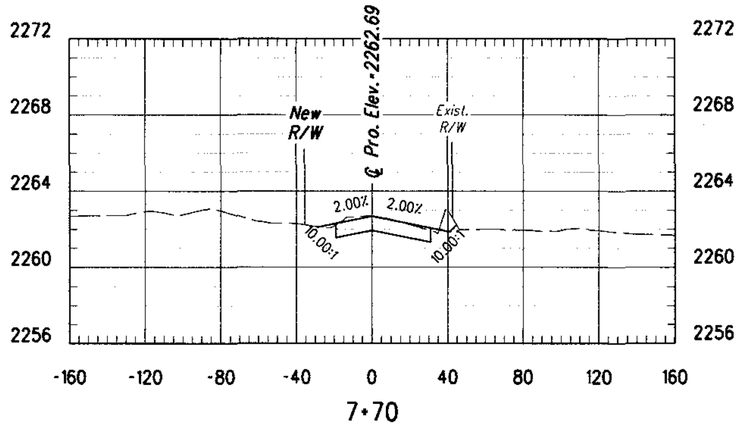

7+70

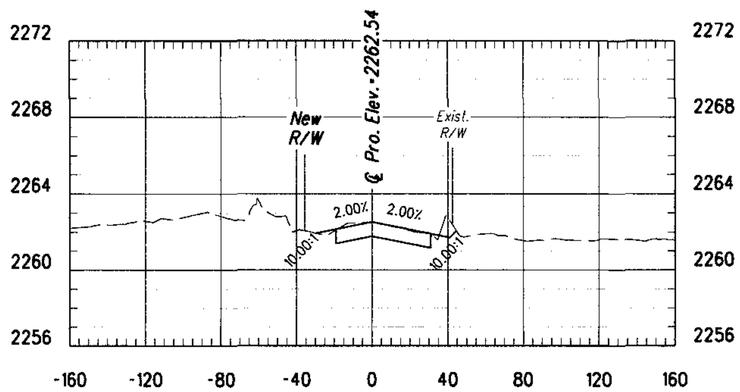

7+50

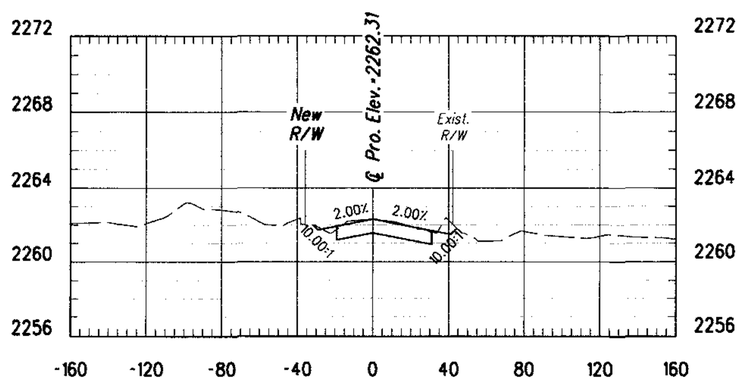

7+15

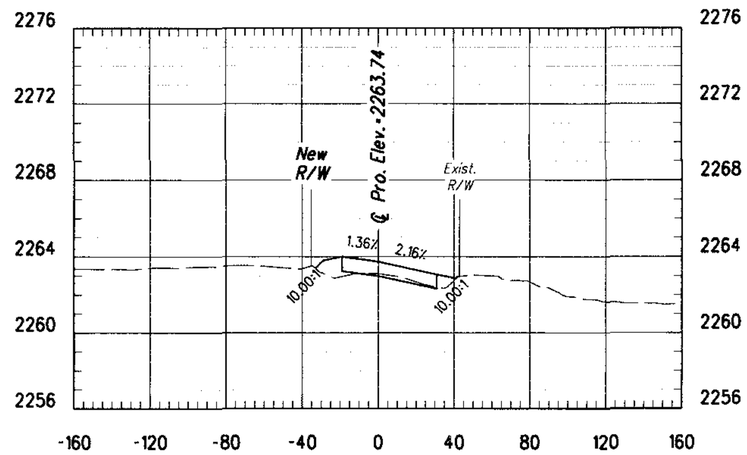

8+50

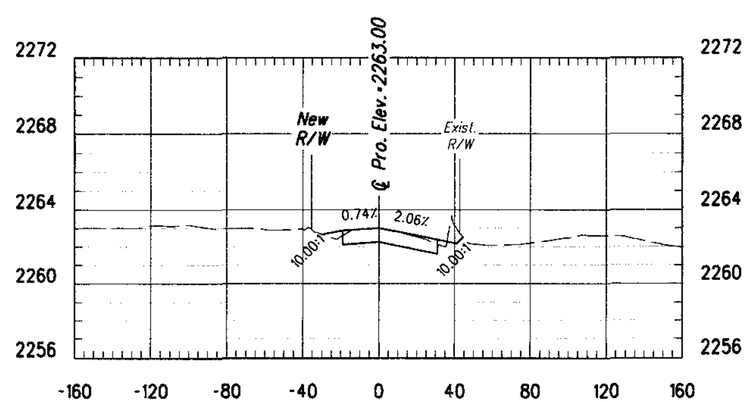

8+00

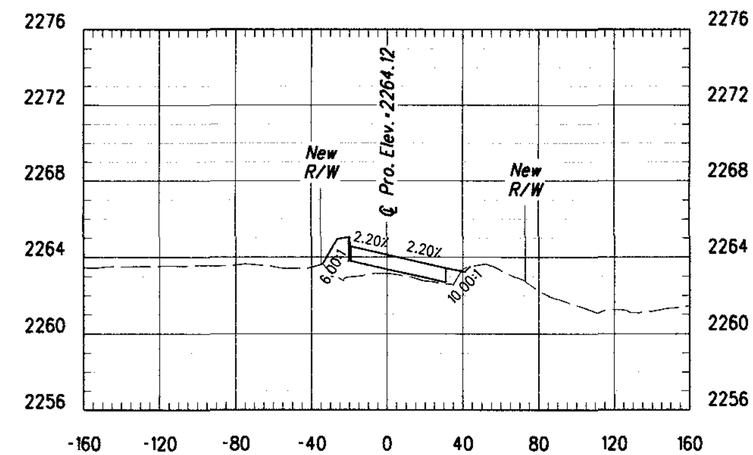

8+70

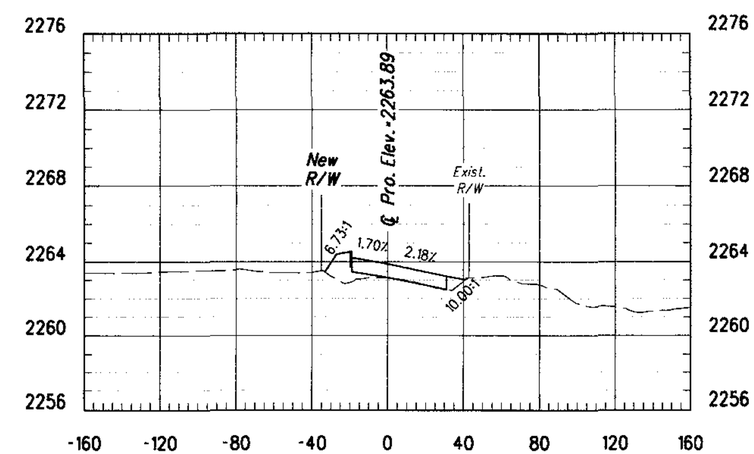

8+58

Sta 7+15 to Sta 8+70

40 0 40 80

Scales	Horiz. 1"=40'	Sheet XS40 of XS41 Page 355 of 356
	Vert. 1"=4'	

Project • 4LCITR

012145
0000000000039914
Pima_County_Dept_of_Transportation\PCDOT-La_Cholla_Blvd-Ruthrauff\13.00_CAD\Construction_Documents\Civil\26C-03.dgn

08\20\09 5:08:19 PM aledesma

CURTIS RD. CROSS SECTIONS

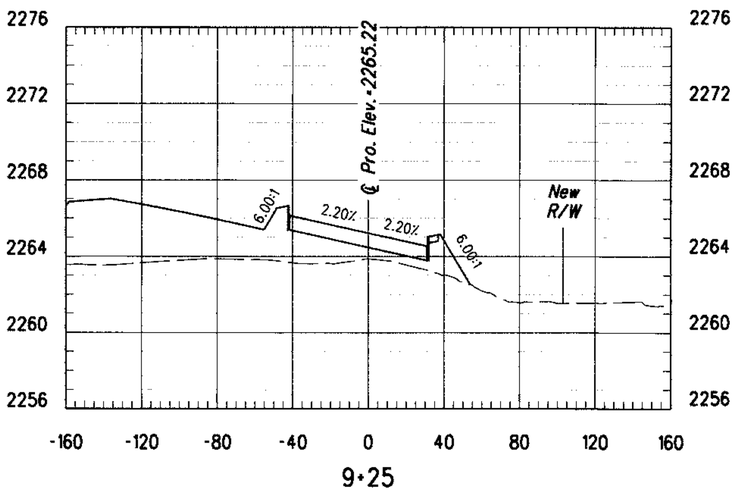

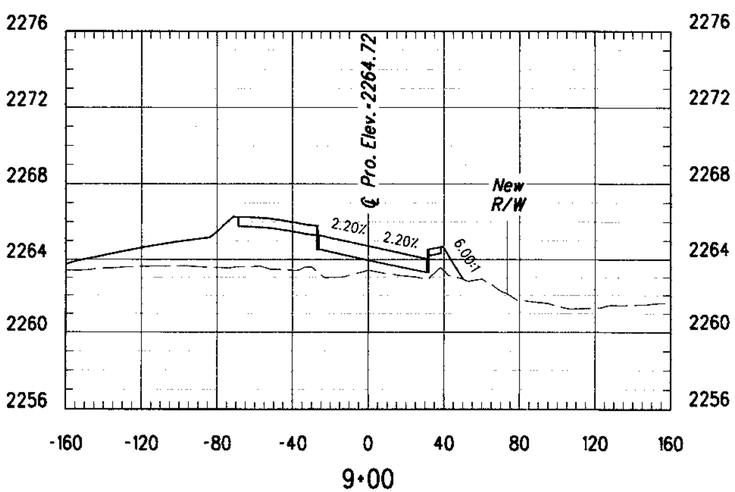

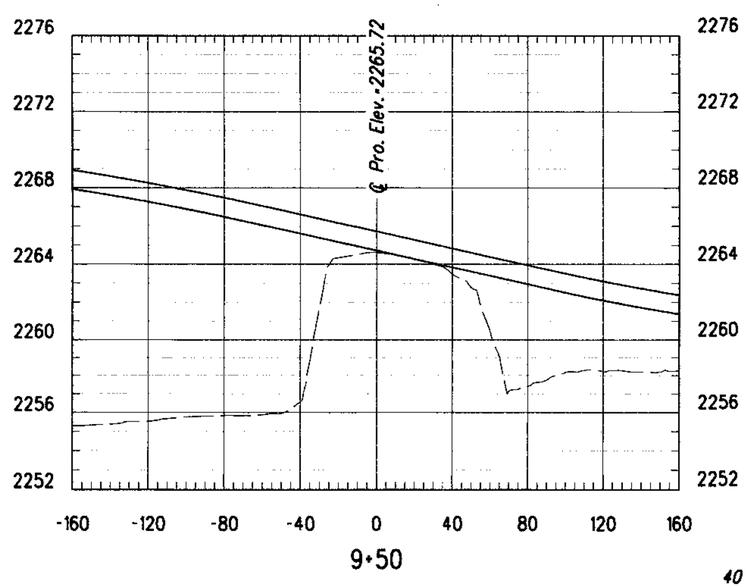

40 0 40 80

Sta 9+00 to Sta 9+50

Scales	Horiz. 1"=40' Vert. 1"=4'	Sheet XS41 of XS41 Page 356 of 356