LA CHOLLA BLVD. BRIDGE

OVER THE RILLITO RIVER

PIMA COUNTY, ARIZONA

C.H. HUCKELBERRY, R.L.S., P.E., DIRECTOR

INDEX TO DRAWINGS:

SHT. NO.	
--	COVER SHEET
1	DETAILS (TYP. SECTION)
2,2A	DETAILS (MISC.)
3	SPECIAL HEADWALL DETAILS
4,4A	MANHOLE DETAILS, SEWER RELOCATION
5.	PIPE SUMMARY SHEET
6	PLAN-PROFILE
7.	PLAN-PROFILE
8	PLAN-PROFILE
9	CHANNEL PLAN & PROFILE
10.	CHANNEL SECTION
11.	CHANNEL SECTION
12	CHANNEL SECTION
13.	DETOUR SHEET
14.	BRIDGE PLAN & ELEVATION
15.	BRIDGE SECTION & GENERAL NOTES
16.	LOG OF SOIL BORINGS
17	PILE BEARING RECORD
18.	PILE BEARING RECORD
19.	FOUNDATION PLAN & DETAILS
20.	SOUTH ABUTMENT & DETAILS
21	NORTH ABUTMENT & WINGWALL
22.	TYP. PIER PLAN, FOUNDATION & ELEVATION
23	TYP PIER REINFORCING DETAILS
24.	BRIDGE DECK PLAN
25.	DECK REINFORCING PLAN
26.	DECK SECTION & ELEVATION TABLE
27	GIRDER DETAILS
28.	DECK DETAILS
29.	BARRIER DETAILS

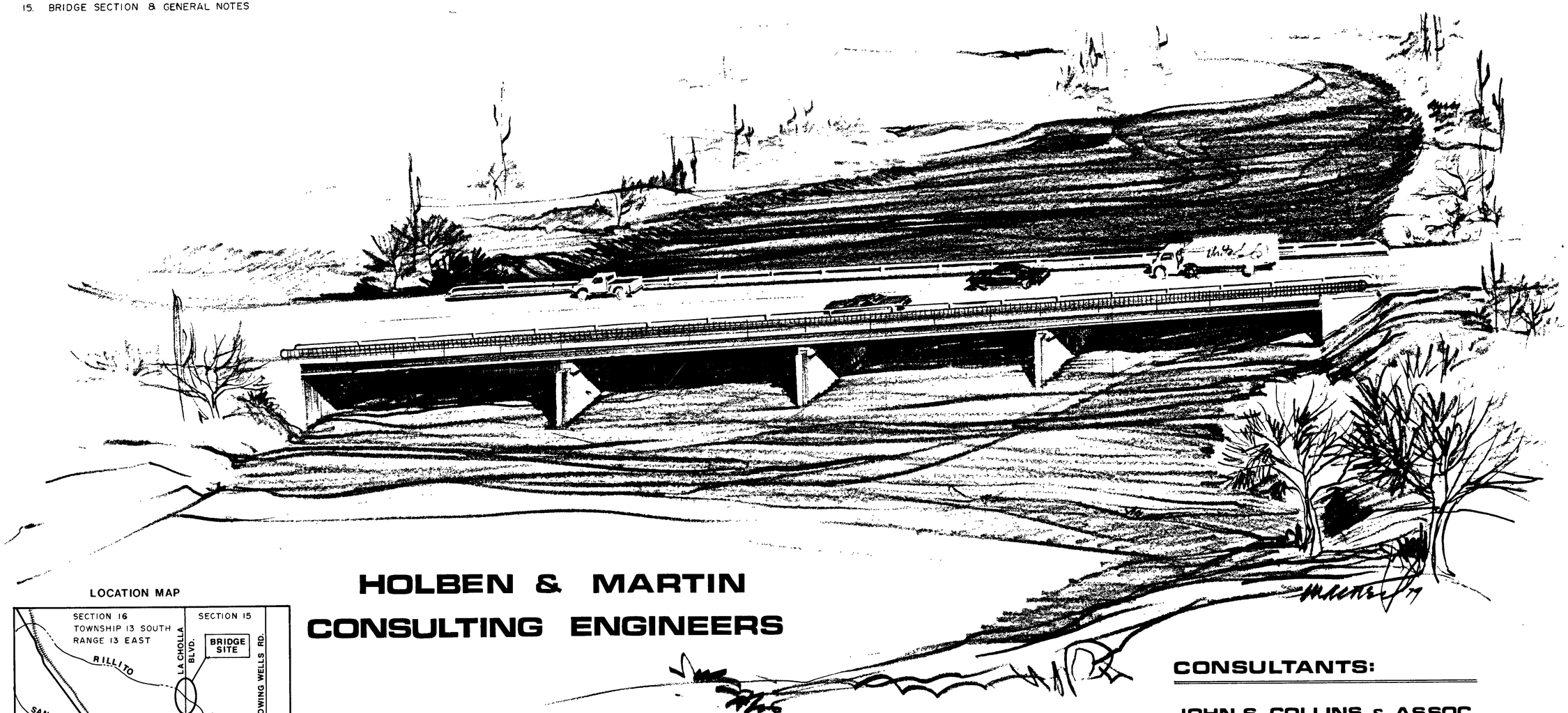

LOCATION MAP

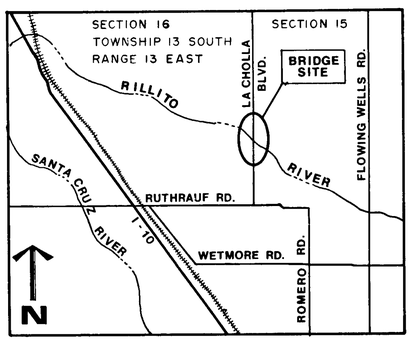

HOLBEN & MARTIN
CONSULTING ENGINEERS

CONSULTANTS:

JOHN S. COLLINS & ASSOC.
CIVIL ENGINEER

MACNEIL-RIEDEL
ARCHITECTS

SHEET 30 C1221

LA CHOLLA BLVD.-RILLITO RIVER BRIDGE

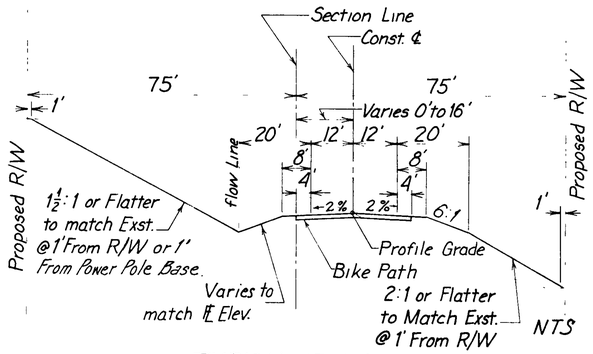

TYPICAL CROWN SECTION

Note: Pvmt. Width Varies From 16' to 22' in Bridge Approaches as Noted on Plans

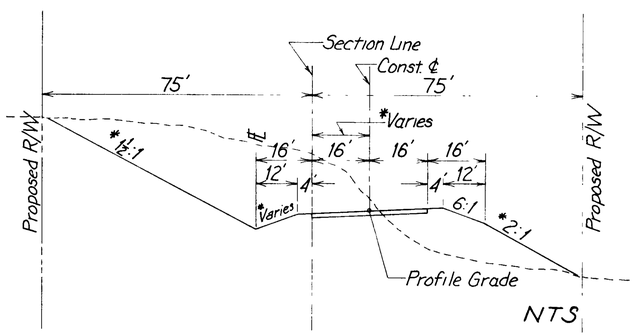

TYPICAL SUPERELEVATED SECTION

(1% Cross-slope)

*See Corresponding Notes, Typical 2% Crown Section, Above

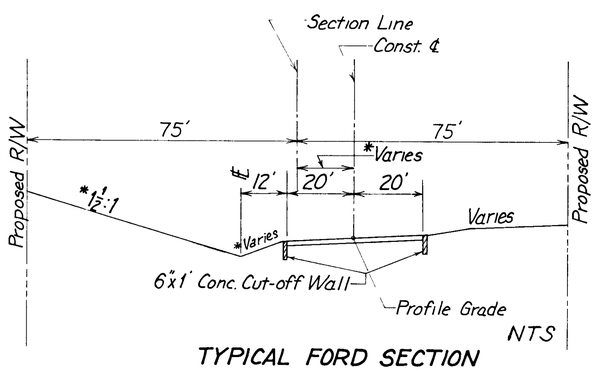

TYPICAL FORD SECTION

(1% Cross-Slope)

*See Corresponding Notes, Typical 2% Crown Section, Above

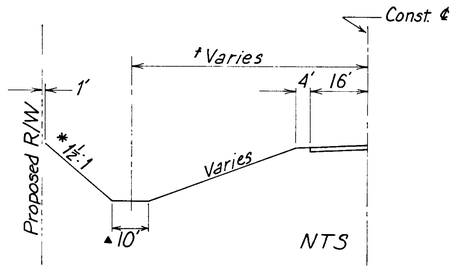

DRAINAGE DITCH DETAIL

▲Varies From 0' to 10', Sta. 20+50 to 21+00

†Varies From 32' to 75' - See Plan & Profile Shts.

*See Corresponding Notes, Typical 2% Crown Section

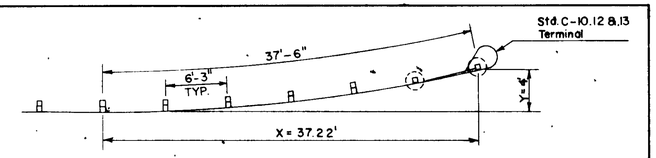

FLARE GEOMETRICS

DIST ALONG 37'-6" PARABOLIC CURVE	DIST ALONG X AXIS	DIST ALONG Y AXIS TO FACE OF GUARD RAIL
6'-3"	6.25	0.11
12'-6"	12.49	0.45
18'-9"	18.71	1.01
25'-0"	24.92	1.79
31'-3"	31.08	2.79
37'-6"	37.22	4.00

GENERAL NOTES

The dimensions applicable to flares located on tangent alignment are suitable for use on curves. Offset or Y distance shall be measured from the curved 10' widened shoulder edge

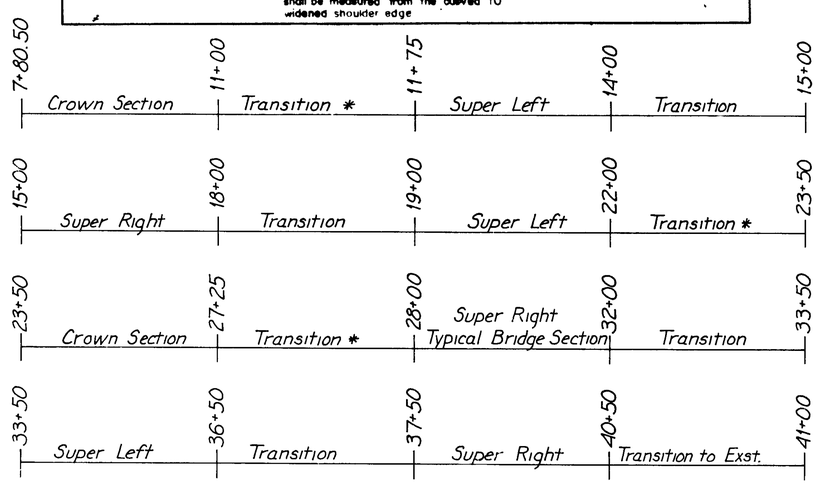

SUPERELEVATION SCHEDULE

*See A.D.O.T. Std. D-56.40

DESIGN DATA

1980 ADT = 4800

2000 ADT = 24,700

Min. Design Speed 55 M.P.H.

LENGTH OF PROJECT

Sta. 7+80.50 to 40+60.00 Bk. = 3279.50'

Sta. 40+59.98 Ahd. to 41+00.00 = 40.02'

Total = 3319.52'

Net and Gross Length = 0.63 Miles

GENERAL NOTES

RIGHT OF WAY

RIGHT OF WAY ENCROACHMENTS SHALL BE REMOVED ONLY BY ORDER OF THE COUNTY. ALL CONSTRUCTION ACTIVITY MUST REMAIN WITHIN RIGHT-OF-WAY AND EASEMENTS.

SPECIFICATIONS

CONSTRUCTION SHALL CONFORM TO THE ARIZONA HIGHWAY DEPARTMENT STANDARD SPECIFICATIONS FOR ROAD AND BRIDGE CONSTRUCTION, EDITION 1966, AND THE 1976 SUPPLEMENTAL SPECIFICATIONS AS MODIFIED BY THE CONTRACT DOCUMENTS.

UTILITIES

CONTRACTOR SHALL VERIFY THE LOCATION OF ALL UTILITIES WITH THE APPROPRIATE ORGANIZATIONS PRIOR TO START OF CONSTRUCTION. THE LOCATION OF UTILITIES AS SHOWN ON PLANS IS APPROXIMATE.

4. TRAFFIC CONTROL

CONTRACTOR SHALL COMPLY WITH THE FHWA MANUAL ON UNIFORM TRAFFIC CONTROL DEVICES FOR STREETS AND HIGHWAYS, 1978, AND THOSE REQUIREMENTS WHICH ARE SPECIFIED ON PLANS AND IN SPECIAL PROVISIONS.

THE PROJECT ROADWAYS SHALL BE STRIPED BY COUNTY FORCES.

SOILS INFORMATION

SOILS INFORMATION CONTAINED HEREIN IS MADE AVAILABLE TO PROSPECTIVE BIDDERS FOR INFORMATION PURPOSES ONLY, AND IS NOT BE BE CONSIDERED A PART OF THE CONTRACT DOCUMENTS. THE INFORMATION IS DEVELOPED AS ACCURATELY AS POSSIBLE BY THE METHODS UTILIZED; HOWEVER, THE COUNTY ACCEPTS NO RESPONSIBILITY FOR ANY CONDITIONS ENCOUNTERED WHICH MAY BE AT VARIANCE WITH INFORMATION CONTAINED HEREIN.

PLANT REMOVAL

THE PIMA COUNTY DEPARTMENT OF TRANSPORTATION & FLOOD CONTROL DISTRICT MAY REMOVE CACTI FROM THE RIGHT-OF-WAY PRIOR TO THE START OF CONSTRUCTION. ANY CACTI NOT REMOVED BY THE DEPARTMENT OF TRANSPORTATION & FLOOD CONTROL DISTRICT, WHICH MUST BE REMOVED DURING CONSTRUCTION, SHALL BE THE RESPONSIBILITY OF THE CONTRACTOR. ALL CACTI AND NATIVE PLANT REMOVAL MUST BE IN ACCORDANCE WITH THE PROVISIONS OF THE "ARIZONA NATIVE PLANT LAW", A.R.S. CHAPTER 7.

HORIZONTAL CONTROL

SURVEY MONUMENTS SHALL BE FURNISHED AND INSTALLED BY THE CONTRACTOR. BASIS OF BEARING FOR THE PROJECT IS AS RECORDED IN BOOK 13, PAGE 41 OF MAPS & PLATS. DATUM FOR THE PROJECT IS THE U.S.C. & G.S. SEA LEVEL DATUM OF U.S.C.E. 1967, 511 Elev. 2266.08

MISCELLANEOUS

THIS PROJECT HAS BEEN DESIGNED USING THE 1974 A.D.O.T. CONSTRUCTION STANDARDS AND CURRENT REVISIONS TO SAME.

SOILS CLASSIFICATION

APPROX. STATION	BORING NO.	DEPTH	ELEVATION OF BORING	AASHTO SOIL CLASSIFICATION	LIQUID LIMIT	PLASTICITY INDEX	% PASSING #200
15+00	8	0 - 1-1/2'	2264.0	A-6	33	15	48
20+00	9	0 - 1-1/2'	2260.6	A-2-4	21	5	23
30+00	11	0 - 1-1/2'	2249.0	A-1-a	-	NP	4
40+00	13	0 - 1-1/2'	2260.0	A-2-4	20	3	31

NO.	DATE	REVISION	BY	CK'D	APROV
1	11-3-80	CROSS-SECTION			

PIMA COUNTY DEPT OF TRANSPORTATION AND FLOOD CONTROL DISTRICT

TUCSON, AZ C. H. HUCKELBERRY, R.L.S., P.E. DIRECTOR

7/29/83

LA CHOLLA BLVD.-RILLITO RIVER BRIDGE

DETAIL SHEET C1222

W.O. No. 4-BLARI

DESIGNED J.P. CHECKED

DRAWN K.E. APPROVED

SHEET 1 OF 29

LA CHOLLA BLVD.-RILLITO RIVER BRIDGE

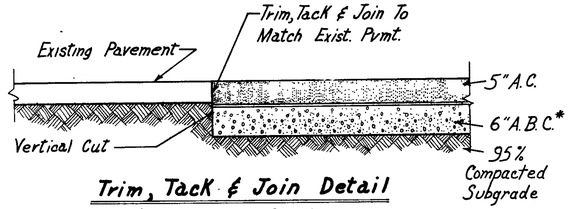

Trim, Tack & Join Detail & Pavement Section

*Note: Existing 4" ABC to be reused.

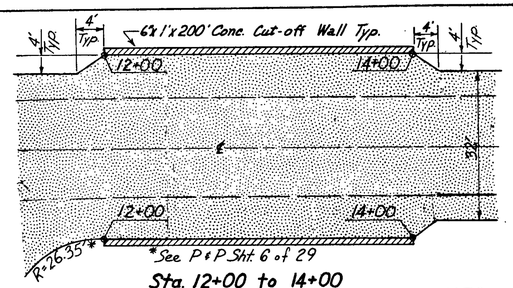

Sta. 12+00 to 14+00 Pvmt. Widening in Ford Section NTS

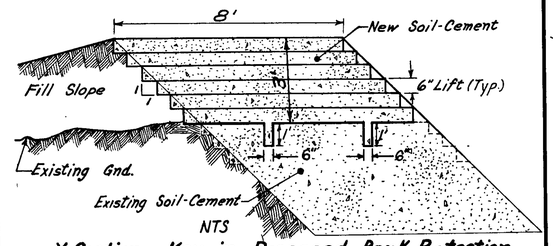

NTS

X-Section Key-in Proposed Bank Protection To Existing

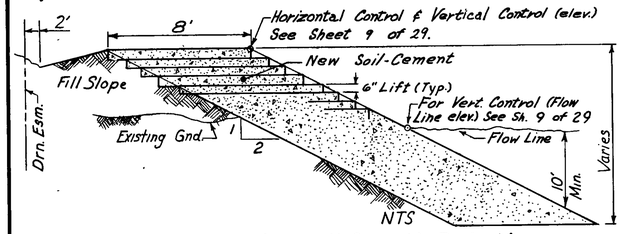

NTS

Bank Protection (Soil-Cement) Detail

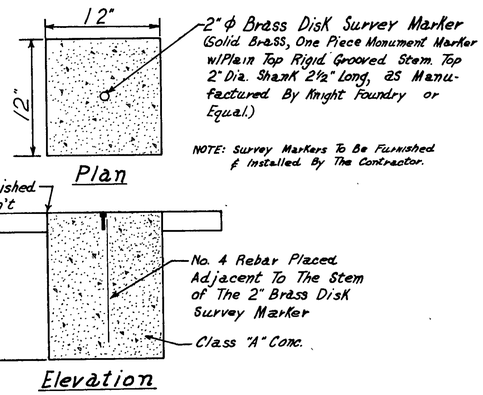

Survey Monument Detail NTS

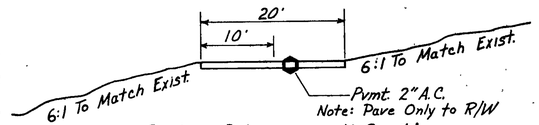

See Sht. 8 of 29. **Bain Driveway X-Section** NTS

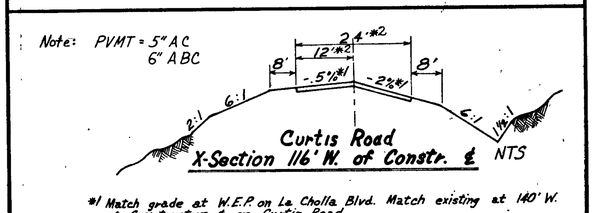

Curtis Road X-Section 116' W. of Constr. ℄ NTS

*1 Match grade at W.E.P. on La Cholla Blvd. Match existing at 140' W. of Construction ℄ on Curtis Road.
*2 Width of pvmt. varies in areas of return ℄ to match existing at 140' W. of Constr. ℄.

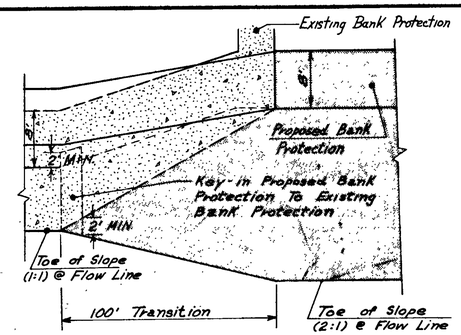

Plan View NTS

Bank Protection Tie-In

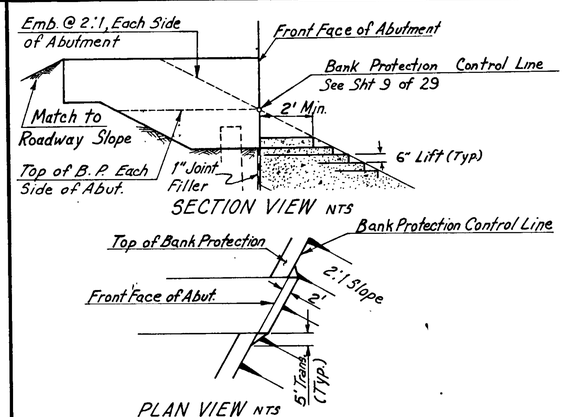

BANK PROTECTION AT BRIDGE ABUTMENTS

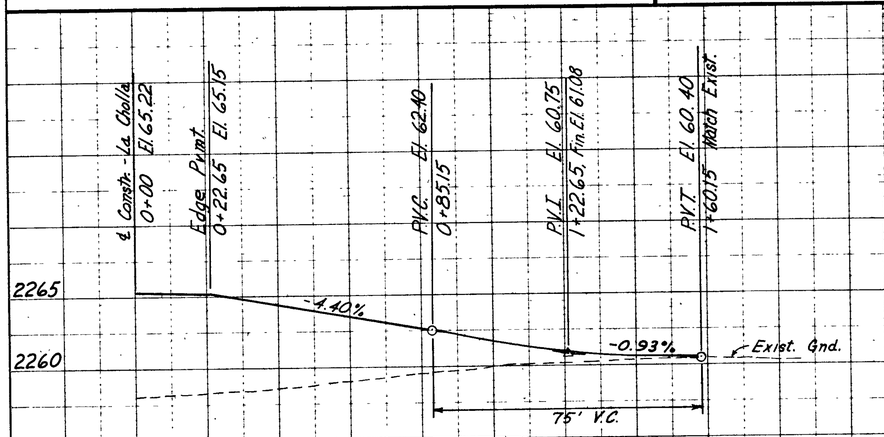

Bain Driveway Profile

Sta. 32+58.48 Skew 22° Rt.
Scale: 1" = 20' Horiz. 1" = 5' Vert.

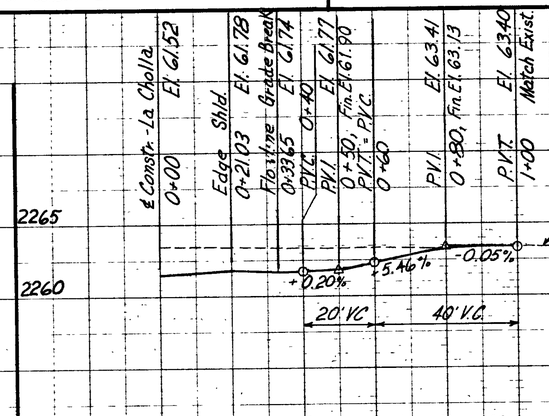

Jay Ave. Profile

Sta. 11+66.58 Skew 18° Rt.
Scale: 1" = 20' Horiz 1" = 5' Vert.

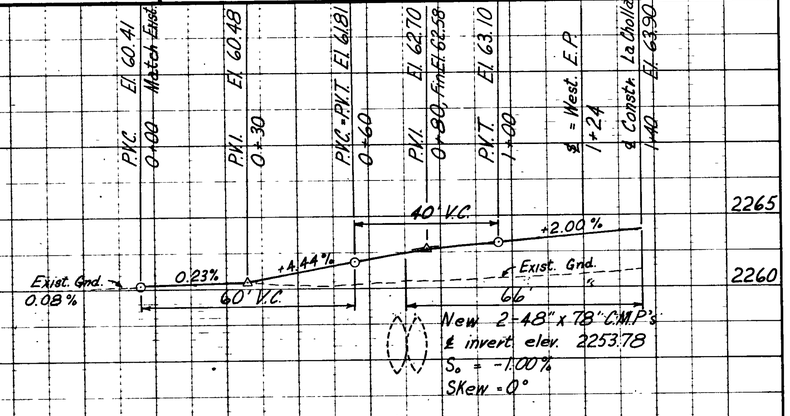

Curtis Road Profile

Sta. 25+90.79
Scale: 1" = 20' Horiz 1" = 5' Vert.

NO.	DATE	REVISION	BY	CK'D	APROV.
1	11-3-80	BANK PROTECTION			

PIMA COUNTY DEPT OF TRANSPORTATION AND FLOOD CONTROL DISTRICT
TUCSON, AZ C. H. HUCKELBERRY, R.L.S., P.E. DIRECTOR

LA CHOLLA BLVD. - RILLITO RIVER BRIDGE

Details & Misc. Profiles

DESIGNED C.A.H. CHECKED
DRAWN B.C.M. APPROVED
SHEET 2 OF 29
W.O. No. 4-BLARI

C1223

PLATE 1, PLAN PROFILE KEUFFEL & ESSER CO. 48 7004 MADE IN U.S.A.

LA CHOLLA BLVD.-RILLITO RIVER BRIDGE

Scale : 1" = 20'

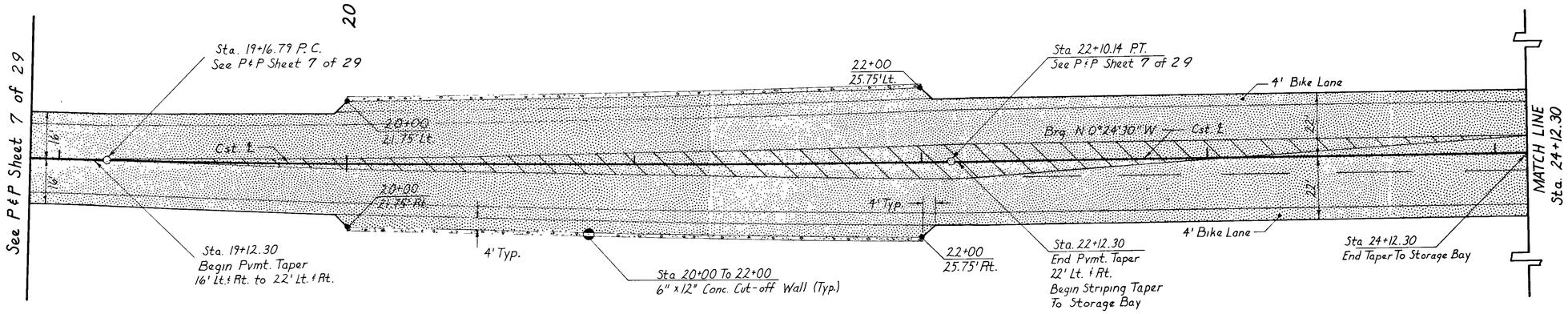

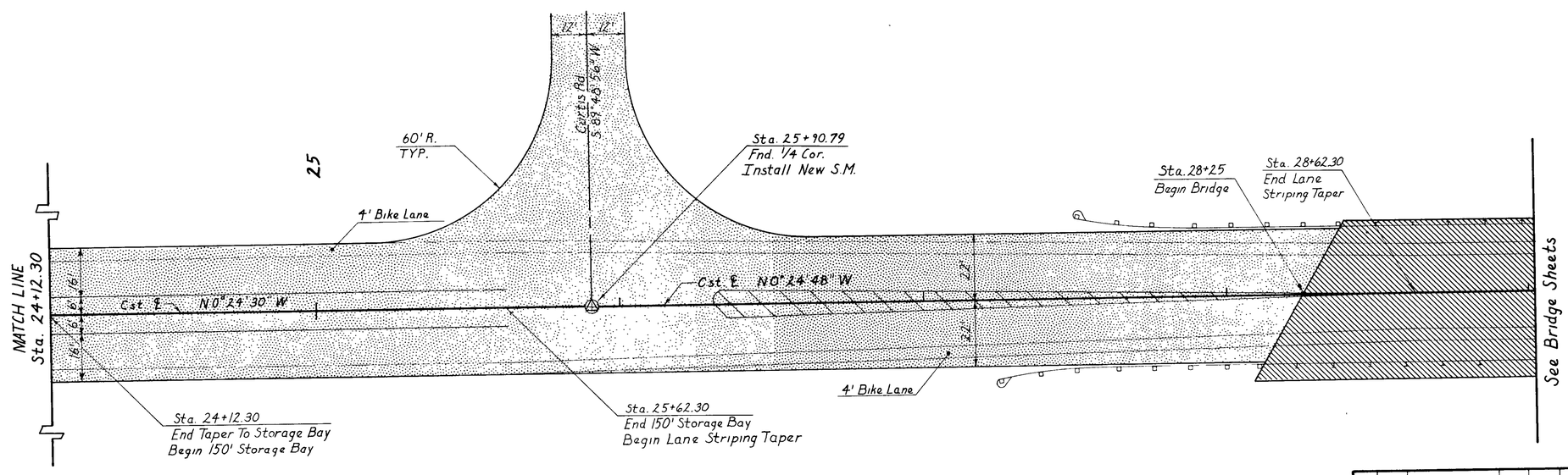

Note:
All Striping By Others

NO.	DATE	REVISION	BY	CK'D	APROV

PIMA COUNTY DEPT. OF TRANSPORTATION
AND FLOOD CONTROL DISTRICT
TUCSON, AZ. C. H. HUCKELBERRY, R.L.S., P.E. DIRECTOR

LA CHOLLA BLVD.-RILLITO RIVER BRIDGE

LA CHOLLA / CURTIS INTERSECTION

DESIGNED	CAH		CHECKED	
DRAWN	CAH		APPROVED	

W.O. 4 BLAR1

SHEET 28 OF 29

C1224

LA CHOLLA BLVD.-RILLITO RIVER BRIDGE

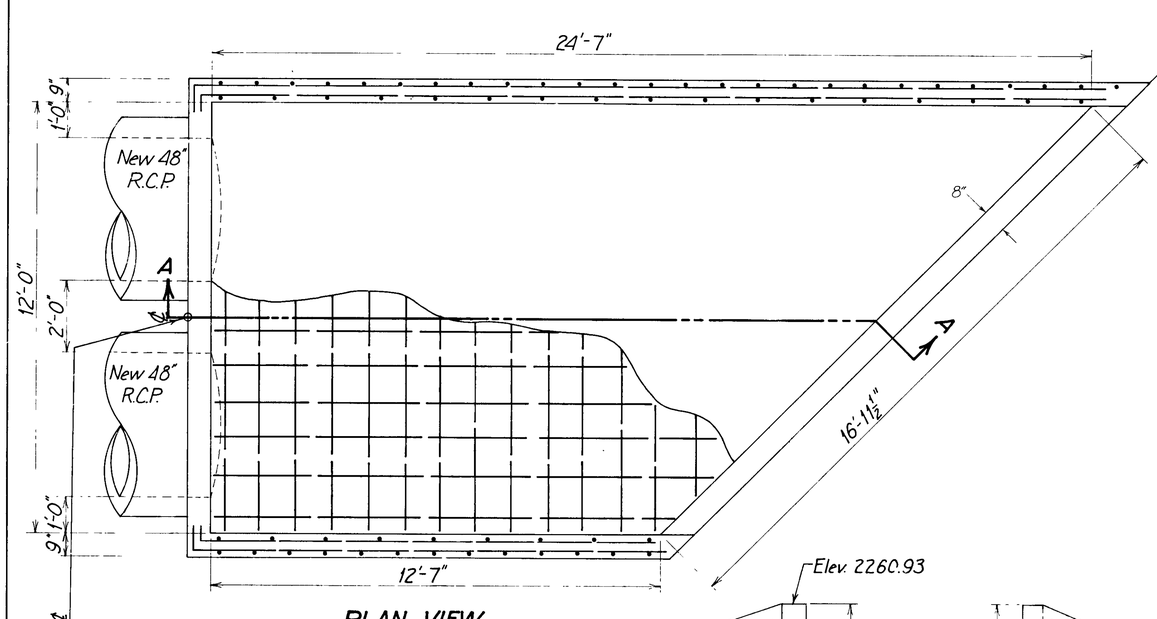

PLAN VIEW
NTS

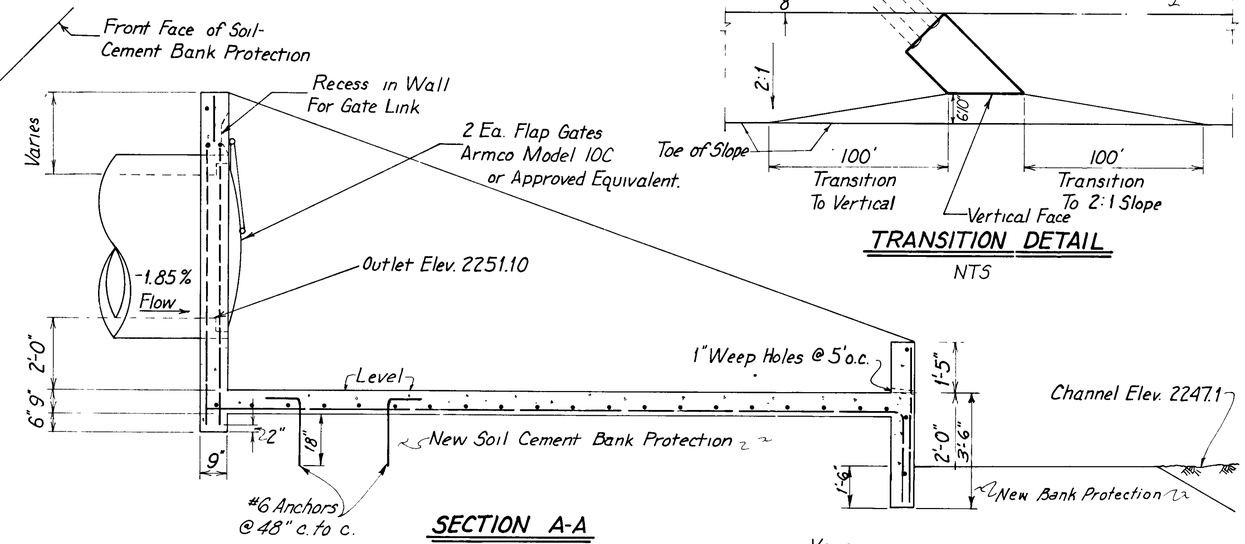

SECTION A-A
NTS

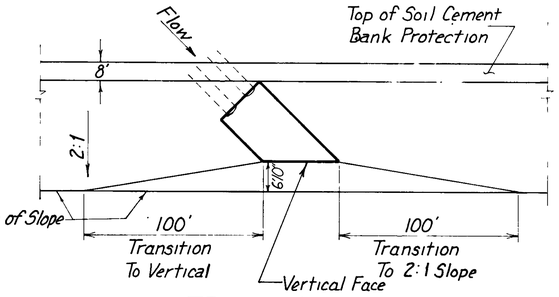

TRANSITION DETAIL
NTS

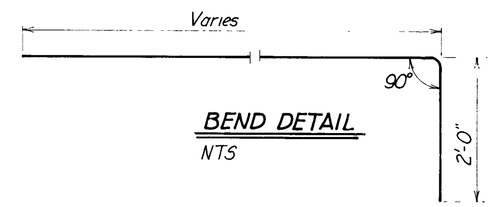

BEND DETAIL
NTS

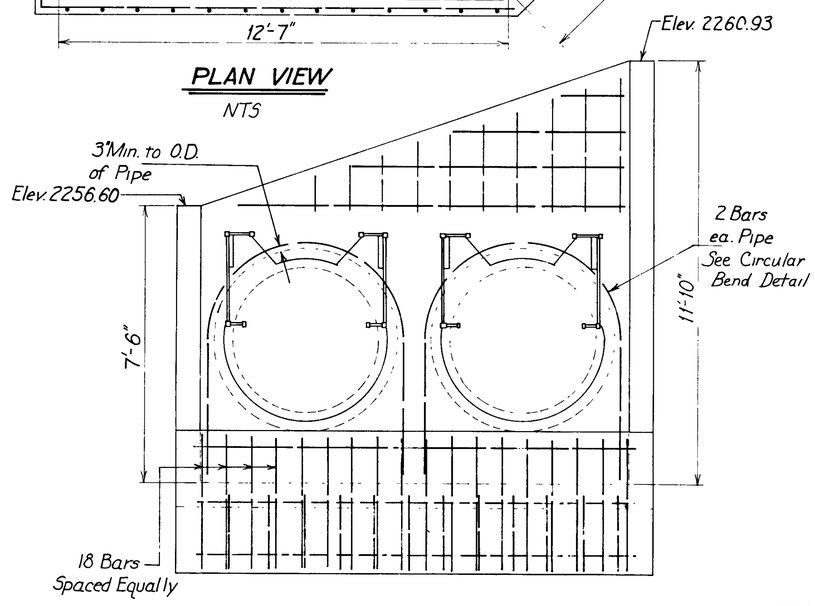

FRONT ELEVATION
NTS

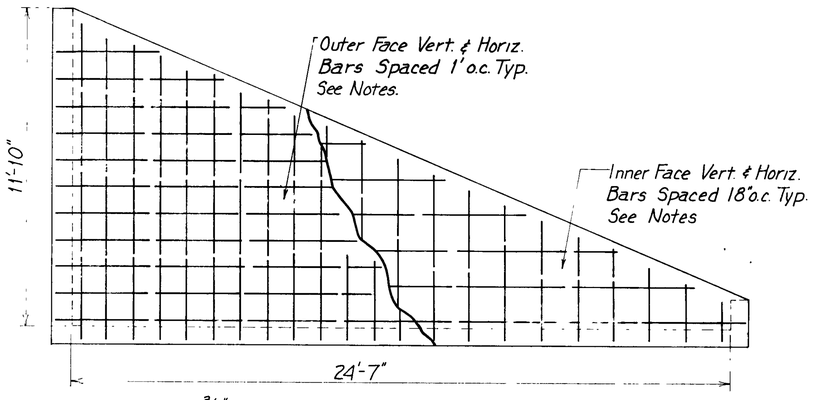

WEST WING WALL
NTS

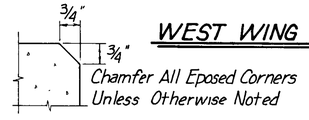

CHAMFER DETAIL
NTS

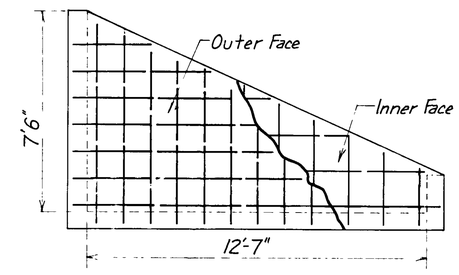

EAST WING WALL
NTS

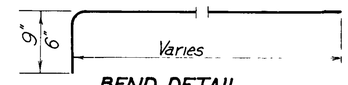

BEND DETAIL
NTS

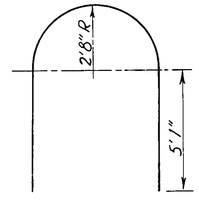

CIRCULAR BEND DETAIL
NTS

Notes:
All Reinforcing Steel Shall Be #6 Bars Spaced 1' o.c. Except as Noted. Steel Shall Be a Min. of 2" From Outside Face of Concrete. Concrete Shall Be Class "A".

NO.	DATE	REVISION	BY	CK'D	APROV
1	11-3-80	SECTION A-A			

PIMA COUNTY DEPT OF TRANSPORTATION AND FLOOD CONTROL DISTRICT
TUCSON, AZ. C H HUCKELBERRY, R.L.S., P.E. DIRECTOR

7/24/80

LA CHOLLA BLVD. - RILLITO RIVER BRIDGE

Detail Sheet

W.O. No. 4-BLARI | DESIGNED JP | DRAWN KE | CHECKED | APPROVED | SHEET 3 OF 29

C1225

LA CHOLLA BLVD-RILLITO RIVER BRIDGE

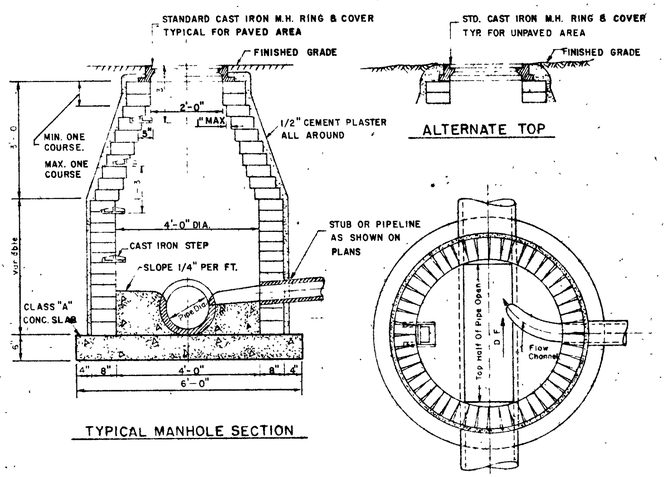

TYPICAL MANHOLE SECTION

ALTERNATE TOP

TYPICAL MANHOLE PART PLAN

BRICK MANHOLE AND CONCRETE BASE

NOT TO SCALE

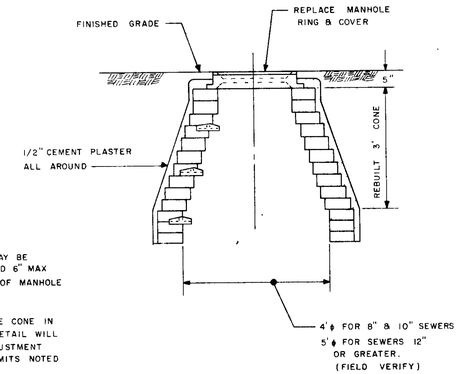

NOTE:

1 EXIST MANHOLE RING MAY BE RAISED 12" MAX OR LOWERED 6" MAX WITHOUT RECONSTRUCTION OF MANHOLE CONE

2 RECONSTRUCTION OF THE CONE IN ACCORDANCE WITH THIS DETAIL WILL BE REQUIRED IF THE ADJUSTMENT EXCEEDS THE MAXIMUM LIMITS NOTED ABOVE.

EXIST. BRICK MANHOLE ON 8" & 18" MAINS

BRICK MANHOLE AND CONCRETE BASE

ADJUST / RECONSTRUCT MANHOLE DETAIL

NOT TO SCALE

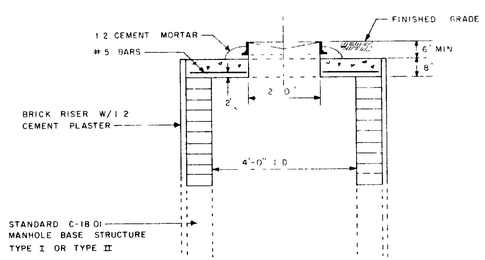

SECTION "A" "A"

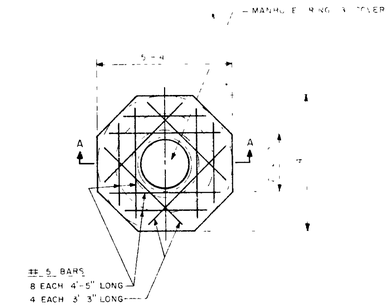

PLAN VIEW

GENERAL NOTES

1 ALL CONCRETE SHALL BE CLASS "A"
2 EVERY FIFTH COURSE OF BRICK IN MANHOLE SHALL BE LAID AS STRETCHERS
3 STD C-18.02 MANHOLE FRAME & COVER, TYPE "A"

BRICK MANHOLE AND CONCRETE BASE

ADJUST / RECONSTRUCT MANHOLE DETAIL

NOT TO SCALE

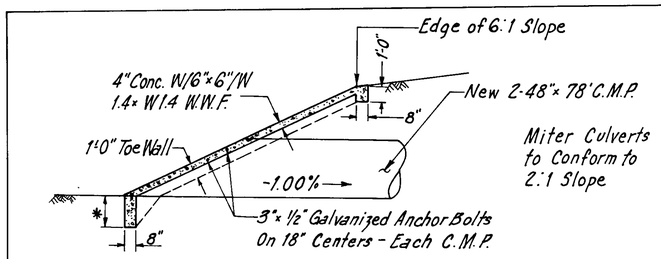

SECTION A-A

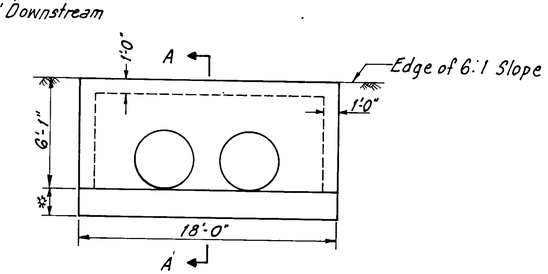

Sta. 25+90.79, 66' Lt. INLET & OUTLET

NEW CULVERT END TREATMENT DETAIL

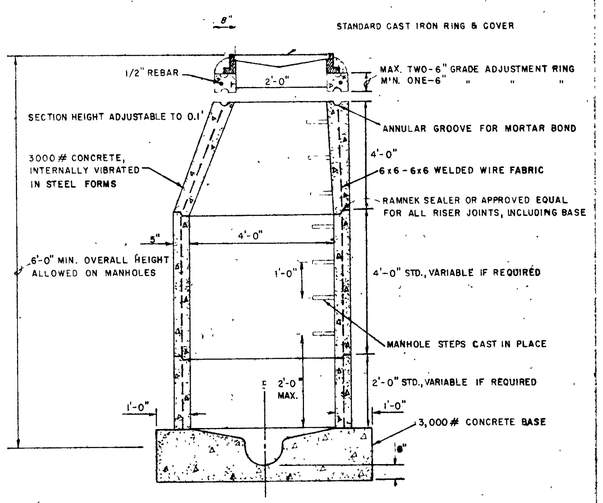

PRECAST CONCRETE MANHOLE

AND CONCRETE BASE

NOT TO SCALE

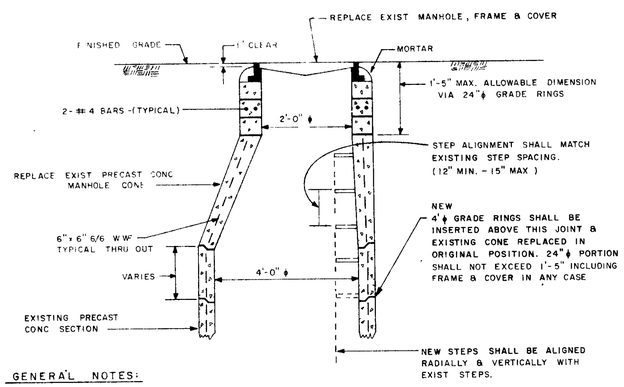

GENERAL NOTES:

1 NEW PRECAST CONCRETE GRADE RINGS SHALL BE 3000 PSI CONCRETE, REINFORCED AS SHOWN AND SHALL CONFORM TO A.S.T.M C-478 (LATEST REVISION)

2 STEP SPACING SHALL BE OBSERVED AS SHOWN AND ADDITIONAL STEPS SHALL BE STEEL REINFORCED POLYPROPLENE PLASTIC AS MANUFACTURED BY M.A. INDUSTRIES, INC. OR AN APPROVED EQUAL.

3. EXCLUDING 24"ϕ GRADE RINGS, ALL JOINTS SHALL BE SEALED USING "RAM-NEK" JOINT SEALER OR AN APPROVED EQUAL. ALL JOINTS SHALL BE FLUSH WITH INNER MANHOLE SURFACE.

PRECAST CONCRETE MANHOLE

RIM ADJUSTMENT DETAIL

NOT TO SCALE

NO.	DATE	REVISION	BY	CK'D	APROV
1	11-3-80	END TREATMENT			

PIMA COUNTY DEPT. OF TRANSPORTATION AND FLOOD CONTROL DISTRICT
TUCSON, AZ. C. H. HUCKELBERRY, R.L.S., P.E. DIRECTOR

LA CHOLLA BLVD. - RILLITO RIVER BRIDGE

Detail Sheet

DESIGNED	PCWWM	CHECKED		SHEET 4 OF 29
DRAWN	PCDOT	APPROVED		

W.O. No.4-BLARI

C1226

BLUE PRINT RECORD: NO. | DATE | FOR | NO. | DATE | FOR

NO. | DESCRIPTION OF REVISIONS | MADE BY | DATE

NOTE: CONTRACTOR TO NOTIFY PIMA CO. WASTEWATER MANAGEMENT DEPT. (PHONE 792-8676) 48 HOURS PRIOR TO CONSTRUCTION.

CONTRACTOR SHALL REFER TO THE GENERAL NOTES LISTED ON SHEET 1 OF 29, FOR ADDITIONAL INFORMATION.

SCALE: HORIZ. 1" = 50'
VERT. 1" = 5'

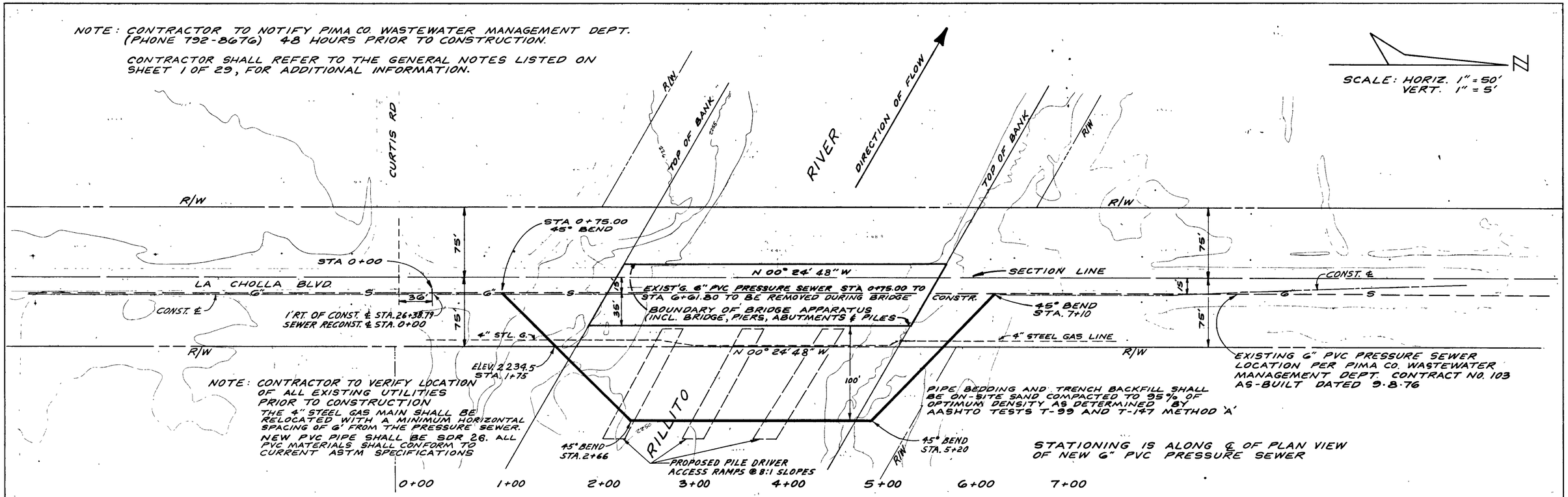

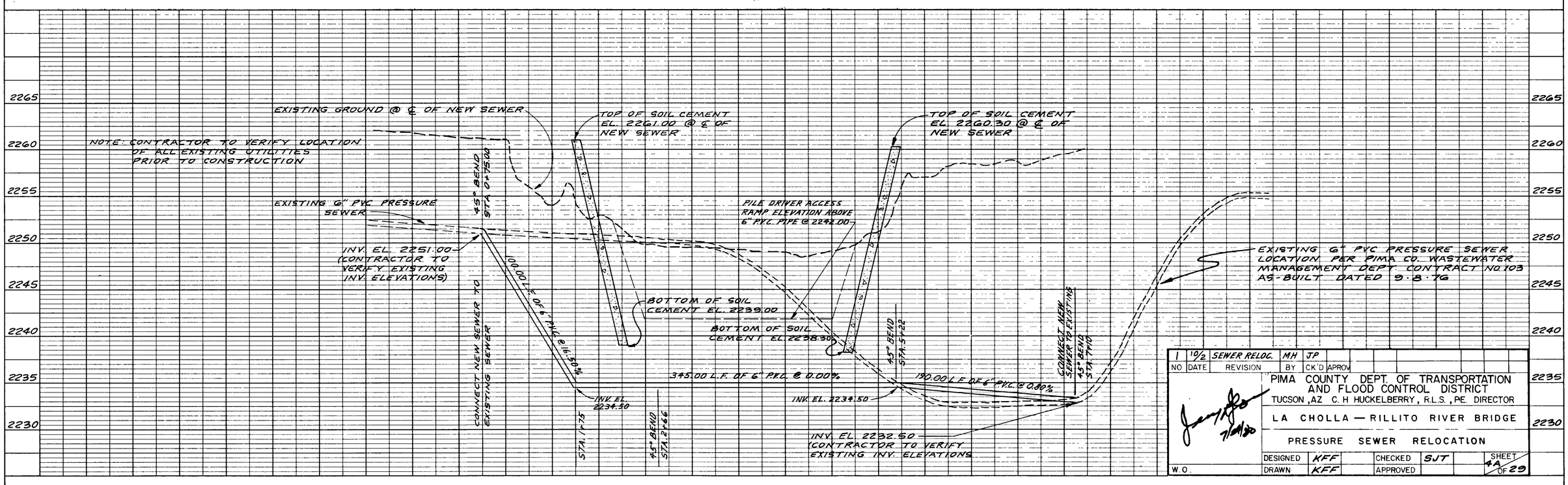

NO	DATE	REVISION	BY	CK'D	APROV
1	10/2	SEWER RELOC.	MH	JP	

PIMA COUNTY DEPT. OF TRANSPORTATION AND FLOOD CONTROL DISTRICT
TUCSON, AZ C. H. HUCKELBERRY, R.L.S., P.E. DIRECTOR

LA CHOLLA — RILLITO RIVER BRIDGE

PRESSURE SEWER RELOCATION

DESIGNED	KFF	CHECKED	SJT	SHEET	4A OF 29
DRAWN	KFF	APPROVED			

W.O.

PLAN: SURVEYED, PLOTTED, ALIGNMENT CHECKED, RT. OF WAY CHECKED, NOTE BOOK, NO., BY, DATE

PROFILE: SURVEYED, PLOTTED, GRADES CHECKED, B.M. NOTED, STRUCTURE NOTATIONS CHKD, NOTE BOOK, NO., BY, DATE

PLATE 1 PLAN PROFILE O P R & R E STANDARD

EUGENE DIETZGEN CO

C1227

LA CHOLLA BLVD.-RILLITO RIVER BRIDGE

DESCRIPTION				CMP SCHEDULE						R.C.P.		END TREATMENT						QUANTITIES						REMARKS
				Extend		Gauge		Gauge				End Sect	Catch Basin				Headwall	Str Excav	Special Backfill	Drain Excav	Class "A" Concrete	Reinf Steel	Berm Emb	
Station	Size	Length	Skew	Left	Right	2 2/3 x 1/2 Coated	2 2/3 x 1/2 Uncoated	3 x 1 Coated	3 x 1 Uncoated	Placement	Class	C-13.05	Type	H	Grate Elev	Apron Type	Type	Cu Yds	Cu Yds	Cu Yds	Cu Yds	Lbs	Cu. Yds.	
66' Lt. Sta. 25+90.79	2-48"	78'	—	—	—	—	12	—	—	—	—	—	—			See Detail		267	242	—	—	—	—	See Detail, Sheet 4 of 29 Inlet & Outlet Protection
75' Lt. Sta. 28+26 to 93.53' Lt. Sta. 28+93.69	2-48"	70'				—	—	—	—	Type 2	IV	—	—	—	—	—	Special	295	308	—	19.52	2235	—	For Hdwl. details & location See Sht. 3 of 29.

NO	DATE	REVISION	BY	CK'D	APROV
1	11-3-80	OUTLET PROTECT.			

PIMA COUNTY DEPT. OF TRANSPORTATION AND FLOOD CONTROL DISTRICT
TUCSON, AZ C. H. HUCKELBERRY, R.L.S., P.E. DIRECTOR

LA CHOLLA BLVD-RILLITO RIVER BRIDGE

PIPE SUMMARY SHEET

DESIGNED J.P. CHECKED
DRAWN SRS APPROVED
W.O. No. 1 BLART

SHEET 5 OF 20

C1228

SURVEY NOS	FINISHED PLANS	REVISIONS	LOCATION	DATE

LA CHOLLA BLVD. - RILLITO RIVER BRIDGE

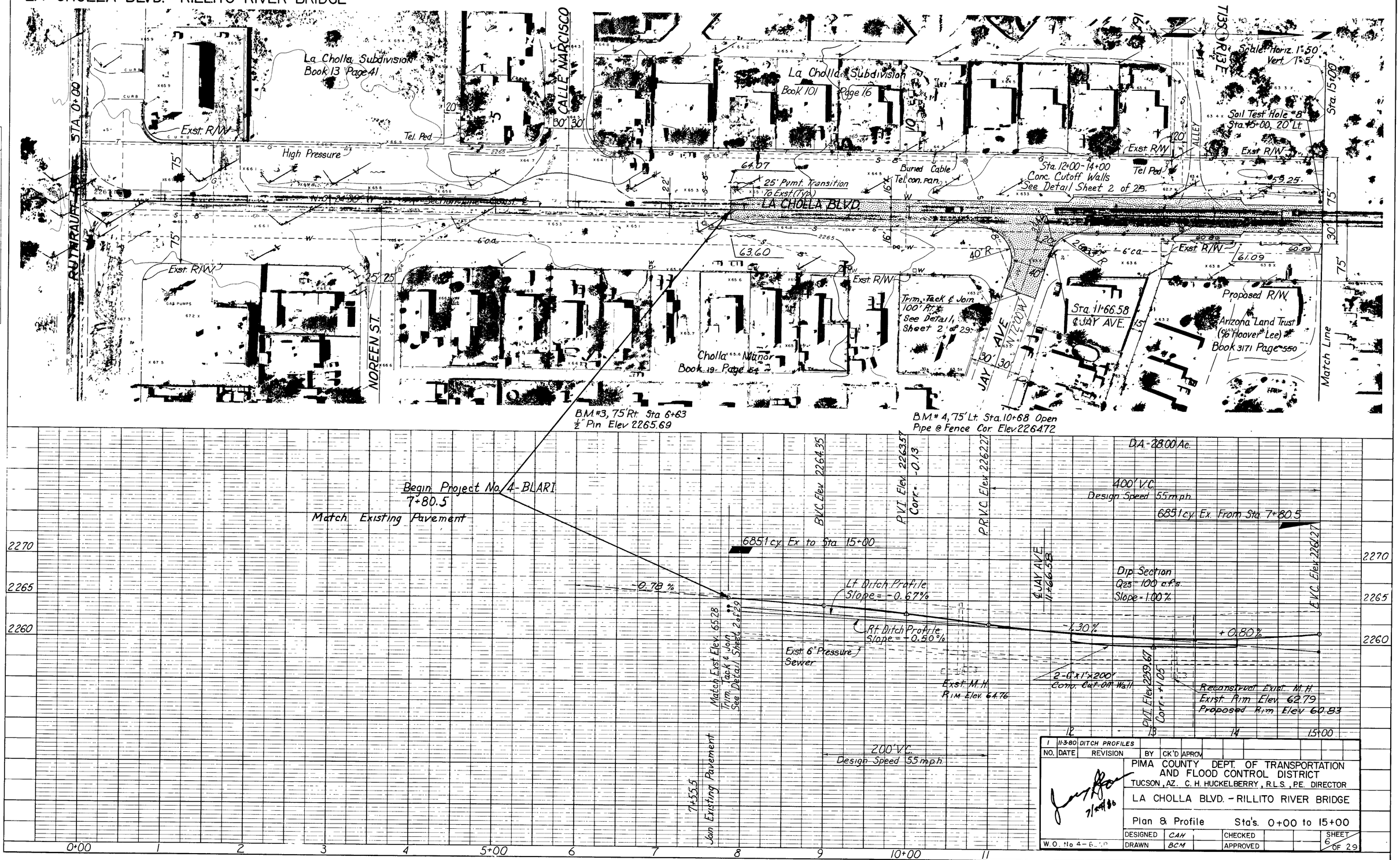

NO.	DATE	REVISION	BY	CK'D	APROV
1	11-3-80	DITCH PROFILES			

PIMA COUNTY DEPT. OF TRANSPORTATION AND FLOOD CONTROL DISTRICT
TUCSON, AZ. C. H. HUCKELBERRY, R.L.S., P.E. DIRECTOR

LA CHOLLA BLVD. - RILLITO RIVER BRIDGE

Plan & Profile Sta's. 0+00 to 15+00

DESIGNED	CAH	CHECKED	
DRAWN	BCM	APPROVED	

W.O. No 4-6...0

SHEET 6 OF 29

PLATE 1 PLAN PROFILE U.P.R.&R.E. STANDARD

EUGENE DIETZGEN CO.

C1229

LA CHOLLA BLVD.- RILLITO RIVER BRIDGE

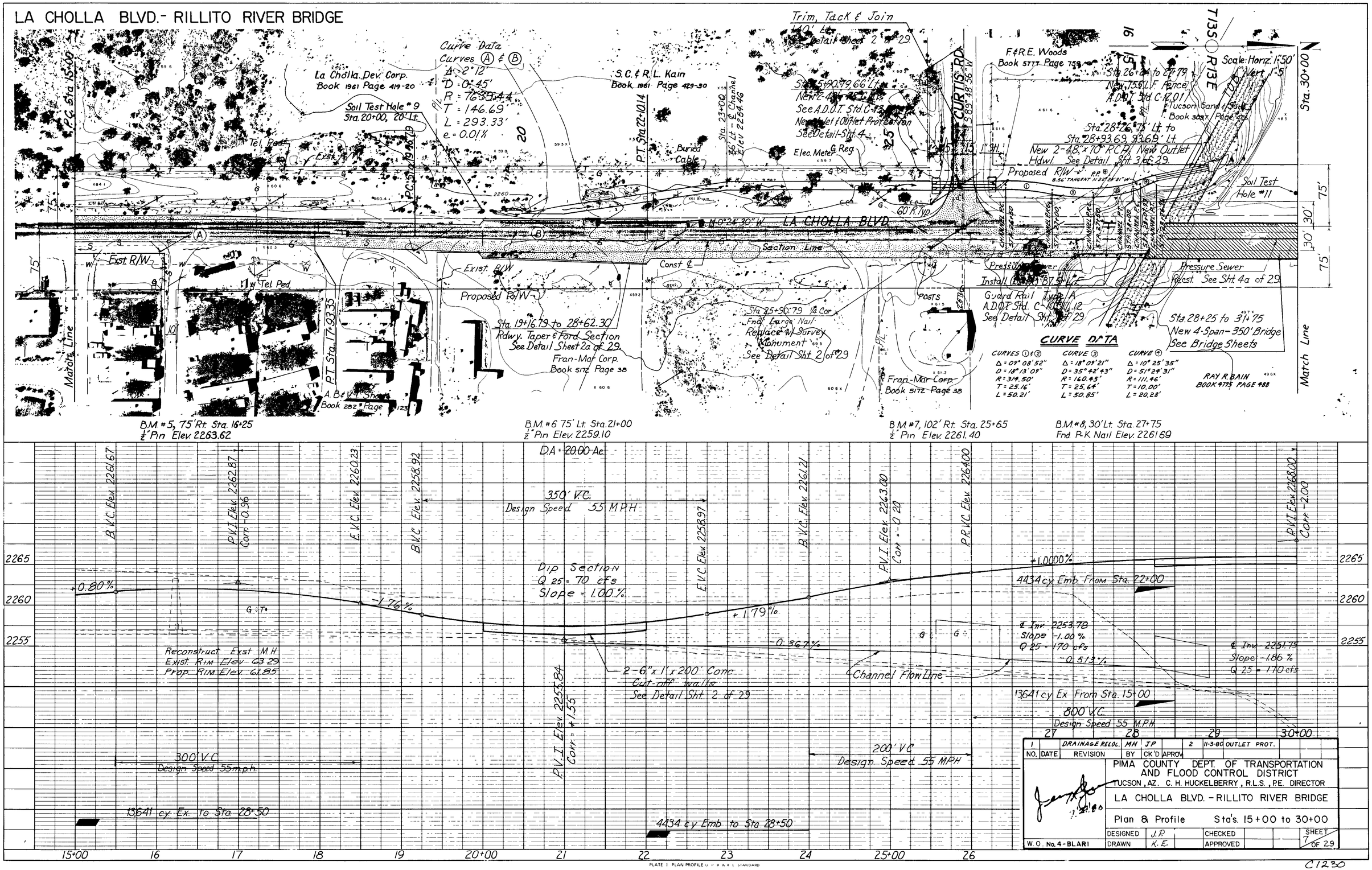

NO.	DATE	REVISION	BY	CK'D	APROV.
1		DRAINAGE RELOC.	MH	JP	
2	11-3-80	OUTLET PROT.			

PIMA COUNTY DEPT. OF TRANSPORTATION AND FLOOD CONTROL DISTRICT
TUCSON, AZ. C. H. HUCKELBERRY, R.L.S., P.E. DIRECTOR

LA CHOLLA BLVD. - RILLITO RIVER BRIDGE

Plan & Profile Sta's. 15+00 to 30+00

W.O. No. 4-BLAR1 | DESIGNED J.P. | DRAWN K.E. | CHECKED | APPROVED | SHEET 7 OF 29

PLATE 1 PLAN PROFILE U.P.R.R.L. STANDARD

EUGENE DIETZGEN CO.

C1230

LA CHOLLA BLVD. - RILLITO RIVER BRIDGE

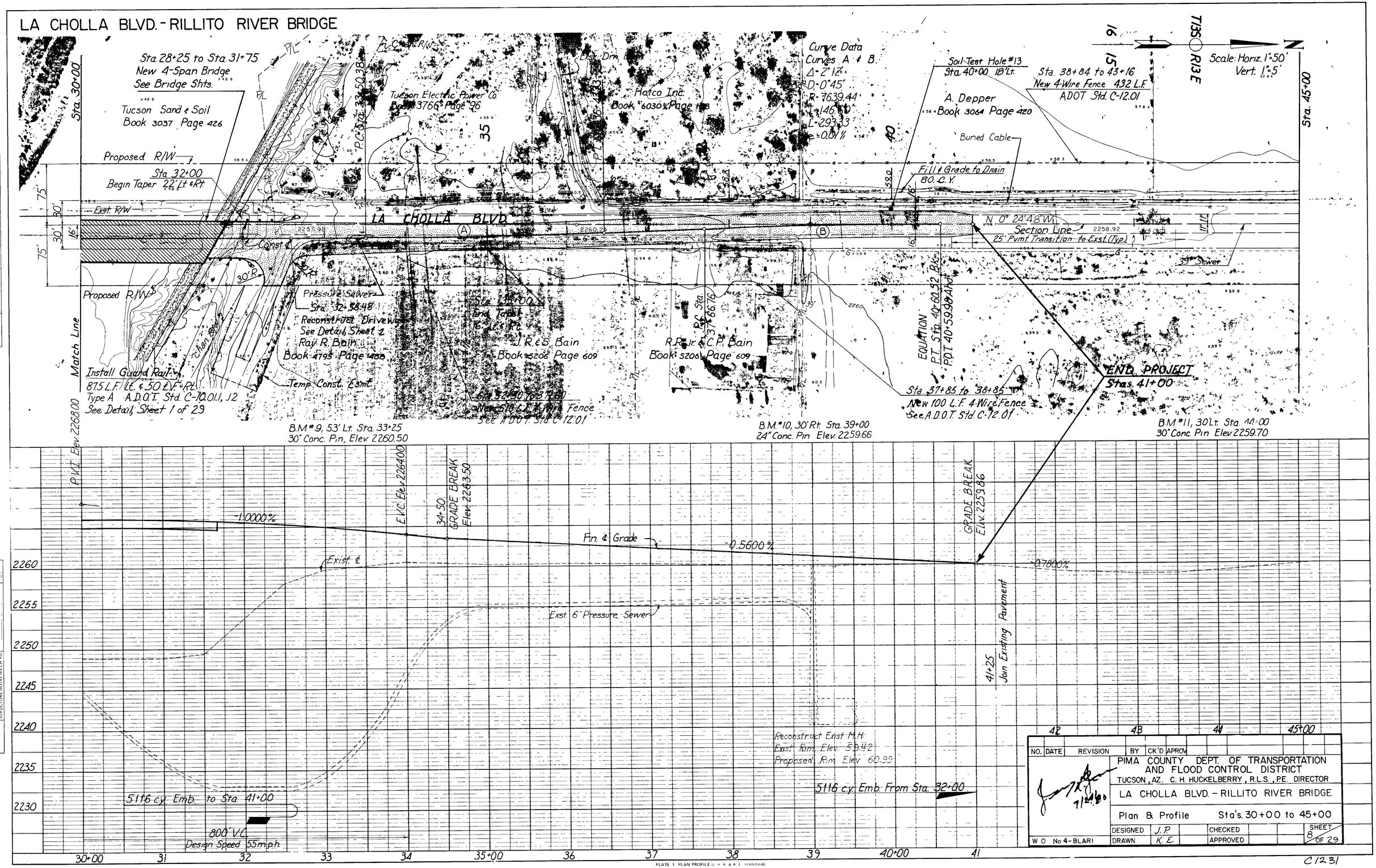

NO.	DATE	REVISION	BY	CK'D	APROV

PIMA COUNTY DEPT. OF TRANSPORTATION AND FLOOD CONTROL DISTRICT
TUCSON, AZ. C. H. HUCKELBERRY, R.L.S., P.E. DIRECTOR

LA CHOLLA BLVD. - RILLITO RIVER BRIDGE

Plan & Profile Sta's. 30+00 to 45+00

DESIGNED	J.P.	CHECKED	
DRAWN	K.E.	APPROVED	

W.O. No 4-BLAR1

SHEET 8 OF 29

C1231

PLATE 1 PLAN PROFILE U.P.R.&R.E. STANDARD

EUGENE DIETZGEN CO.

LA CHOLLA BLVD.-RILLITO RIVER BRIDGE

Bank Protection Curve Data

Ⓐ	Ⓑ	Ⓒ
Δ = 18° 00'	Δ = 46° 30'	Δ = 30°00'00"
D = 11° 20' 37"	D = 4° 28' 32"	D = 4°12' 22"
R = 505.10'	R = 1280.16'	R = 1362.20'
T = 80.00'	T = 550.00'	T = 365.00'
L = 158.68'	L = 1038.95'	L = 713.25'

Ⓓ
Δ = 9°00'
D = 5° 38' 14"
R = 1016.50'
T = 80.00'
L = 159.67'

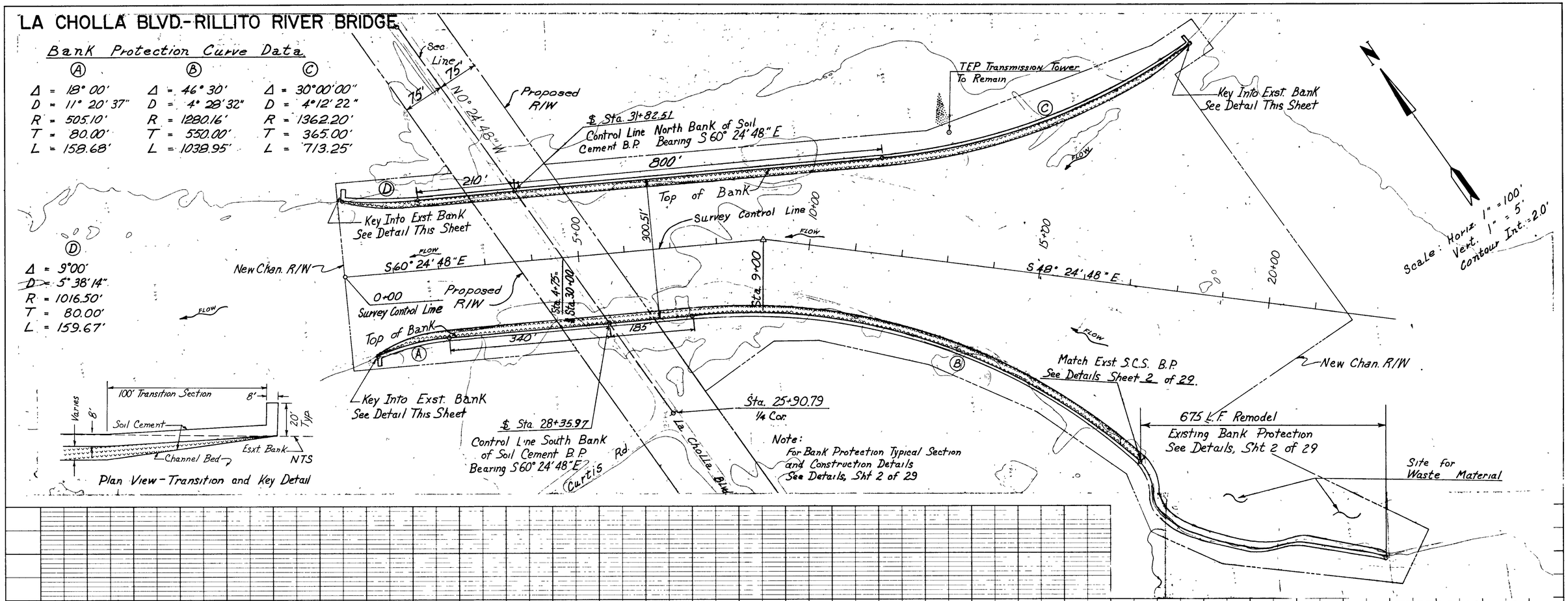

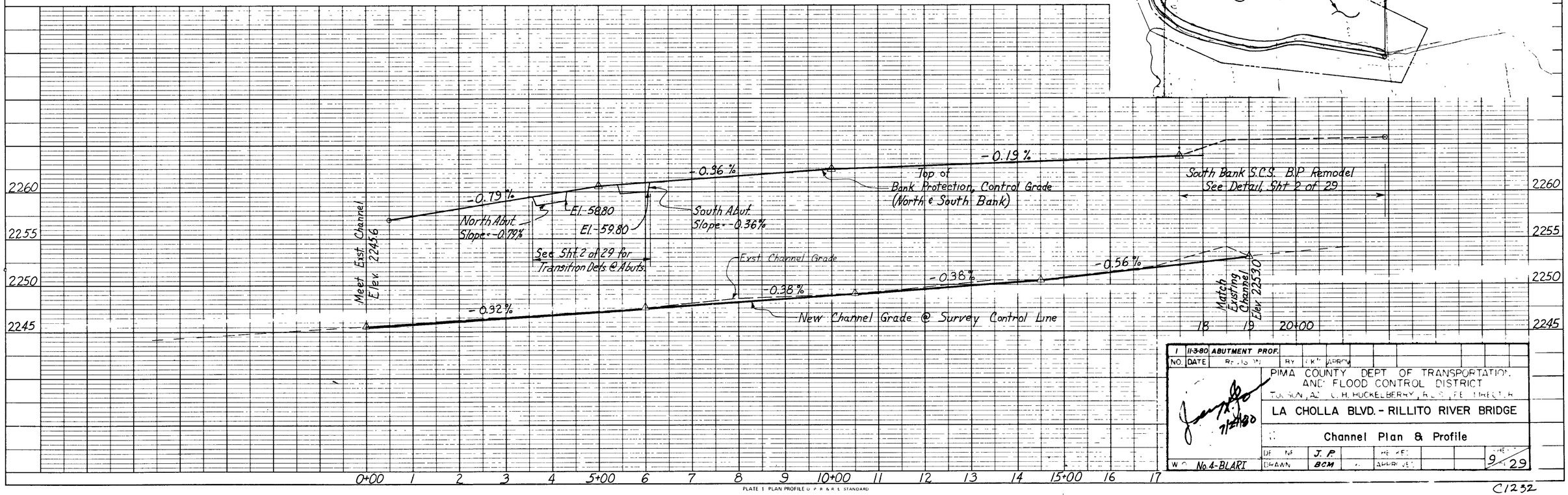

NO.	DATE	REVISION	BY	CHK	APPROV
1	11-3-80	ABUTMENT PROF.			

PIMA COUNTY DEPT OF TRANSPORTATION AND FLOOD CONTROL DISTRICT
TUCSON, ARIZ. C. H. HUCKELBERRY, P.E. DIRECTOR

LA CHOLLA BLVD. - RILLITO RIVER BRIDGE

Channel Plan & Profile

DESIGN J. P. | DRAWN BCM | REVIEWED | APPROVED | DATE 9/29

W.O. No. 4-BLART

7/24/80

PLATE 1 PLAN PROFILE O.P.R.&R.E. STANDARD

EUGENE DIETZGEN CO.

C1232

PLAN — NOTE BOOK — SURVEYED — PLOTTED — ALIGNMENT CHECKED — R/W DIM. CHECKED — NO. — BY — DATE

PROFILE — NOTE BOOK — SURVEYED — PLOTTED — GRADES CHECKED — R/W DIM. CHECKED — STRUCTURE NOTAT'NS CH'KD — NO. — BY — DATE

LA CHOLLA BLVD - RILLITO RIVER BRIDGE

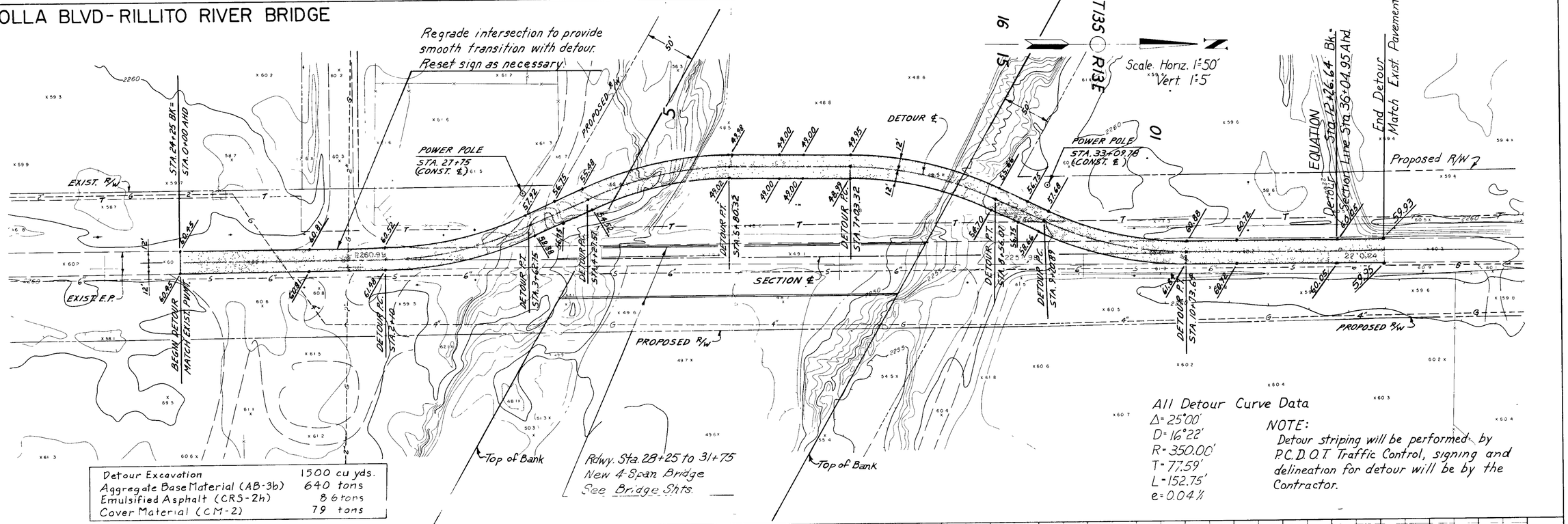

Detour Excavation	1500 cu yds.
Aggregate Base Material (AB-3b)	640 tons
Emulsified Asphalt (CRS-2h)	8.6 tons
Cover Material (CM-2)	79 tons

All Detour Curve Data
Δ = 25°00'
D = 16°22'
R = 350.00'
T = 77.59'
L = 152.75'
e = 0.04%

NOTE:
Detour striping will be performed by P.C.D.O.T. Traffic Control, signing and delineation for detour will be by the Contractor.

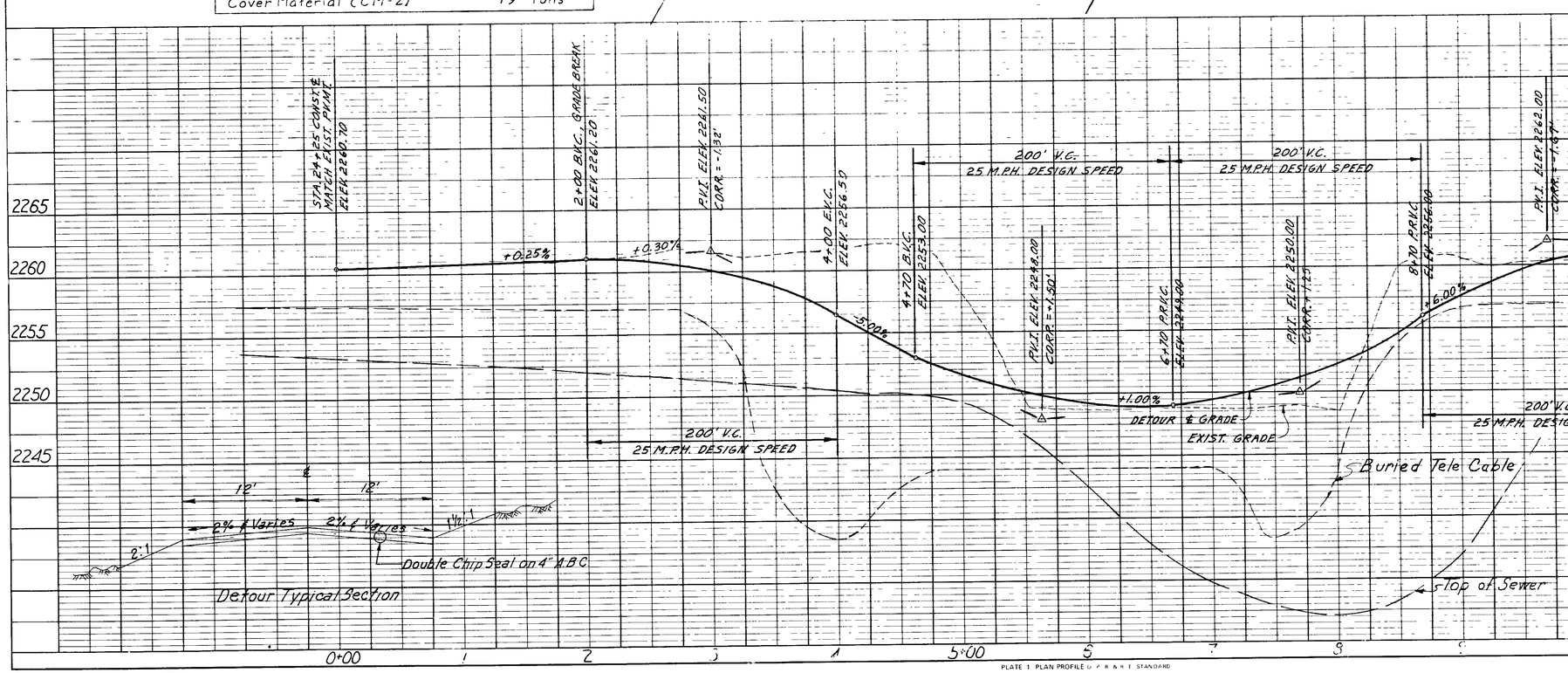

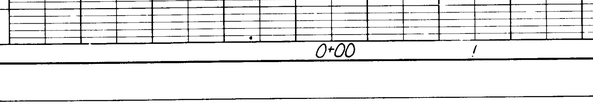

Detour Typical Section

NO.	DATE	REVISION	BY	CK'D	APROV
1		DETOUR RELOC.	MH	JP	
2	11-3-80	STATION CORR.			

PIMA COUNTY DEPT. OF TRANSPORTATION AND FLOOD CONTROL DISTRICT
TUCSON, AZ. C. H. HUCKELBERRY, R.L.S., P.E. DIRECTOR

LA CHOLLA BLVD. - RILLITO RIVER BRIDGE

Detour Plan & Profile

DESIGNED J.P. CHECKED
DRAWN K.E. APPROVED
W.O. No 4-BLA R1
SHEET 13 OF 29

C1233

PLATE 1 PLAN PROFILE C.P.R.&R.E. STANDARD
EUGENE DIETZGEN CO.

LA CHOLLA BLVD., RILLITO RIVER BRIDGE

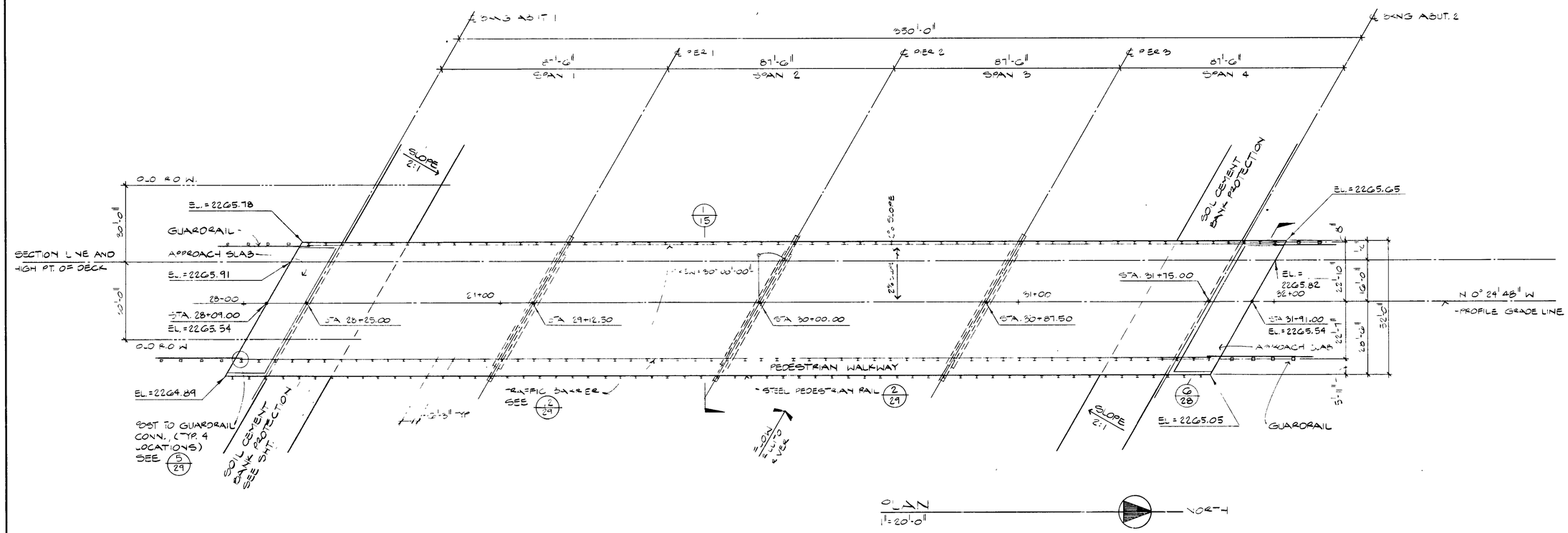

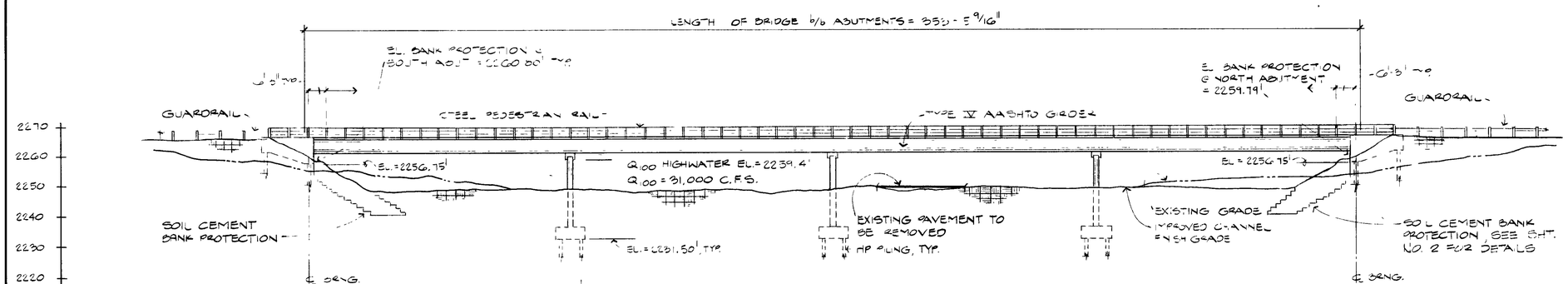

EAST ELEVATION

1" = 20'-0"

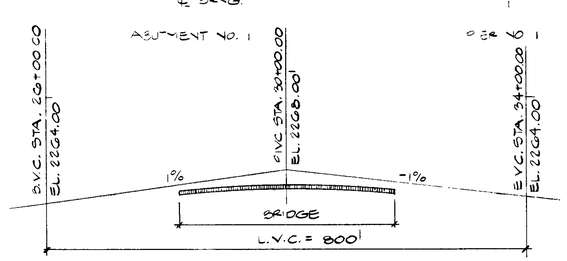

BRIDGE PROFILE GRADE - LA CHOLLA BLVD

NO SCALE

NO.	DATE	REVISION	BY	CK'D	APROV

PIMA COUNTY DEPT. OF TRANSPORTATION AND FLOOD CONTROL DISTRICT

TUCSON, AZ. C. H. HUCKELBERRY, R.L.S., P.E. DIRECTOR

BRIDGE PLAN AND ELEVATION

C1234

HOLBEN & MARTIN STRUCTURAL ENGINEERS
TUCSON ARIZONA

W.O. No. 4 BLARI	DESIGNED	D.R.L.		CHECKED		SHEET 4 OF 29
	DRAWN	R.J.N.		APPROVED		

LA CHOLLA BLVD., RILLITO RIVER BRIDGE

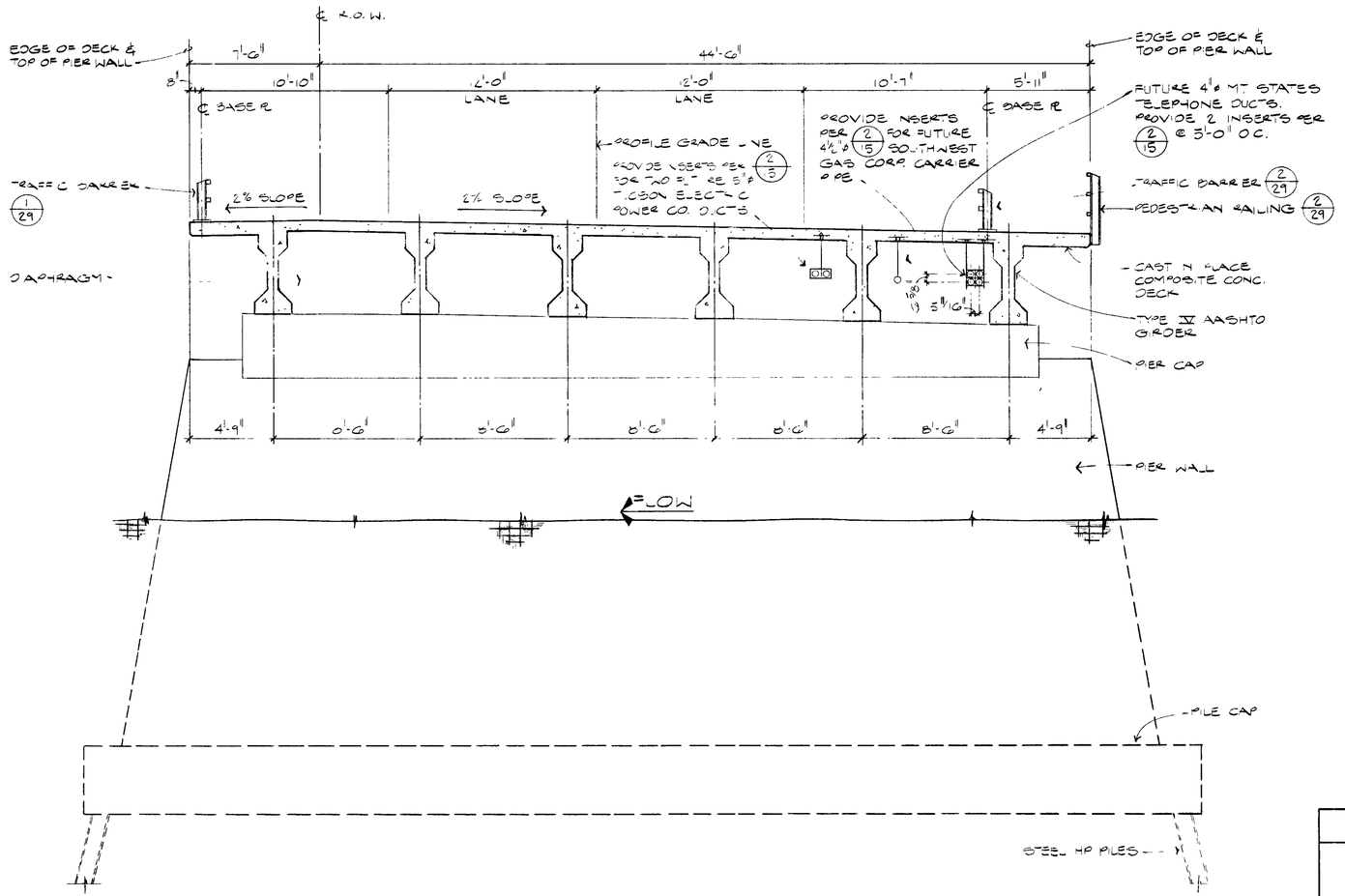

TYPICAL BRIDGE CROSS SECTION (1)
N.T.S.

PROVIDE 6" ø SLEEVES @ ABUT., PIER, AND INTERMEDIATE DIAPHRAGMS TO PASS INDICATED DUCTS AND PIPES. SEE 3/15

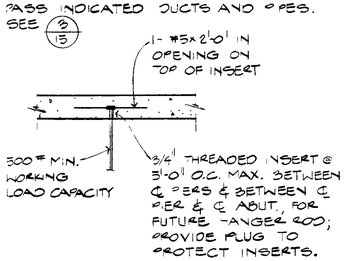

HANGER INSERT DTL. (2)
N.T.S.

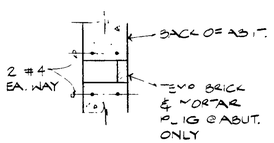

TYP. SECTION THRU OPNG. FOR FUTURE UTILITIES (3)
N.T.S.

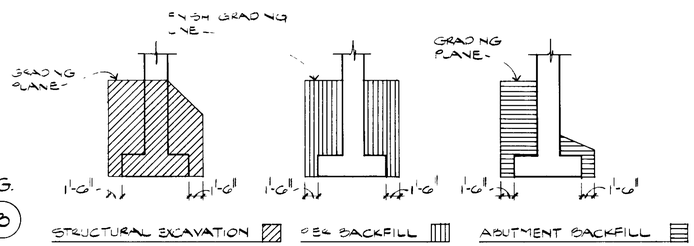

LIMITS OF PAYMENT FOR EXCAVATION AND BACKFILL

GENERAL NOTES:

DESIGN SPECIFICATIONS:
AMERICAN ASSOCIATION OF STATE HIGHWAY AND TRANSPORTATION OFFICIALS (AASHTO) STANDARD SPECIFICATIONS FOR HIGHWAY BRIDGES, 12TH EDITION DATED 1977, AND THE 1978 & 1979 AASHTO INTERIM SPECIFICATIONS.

CONSTRUCTION SPECIFICATIONS:
STANDARD SPECIFICATIONS ARIZONA HIGHWAY DEPARTMENT OF TRANSPORTATION, DATED 1969 1978 SUPPLEMENTAL SPECIFICATIONS AND THE SPECIAL PROVISIONS.

DESIGN LOADINGS:
BRIDGE A.A.S.H.T.O. HS 20-44
DEAD LOAD INCLUDES ALLOWANCE OF 25 POUNDS PER SQ. FT. FOR FUTURE WEARING SURFACE.

CONCRETE:
REINFORCED CONCRETE TO BE CLASS D, F'_c = 3000 P.S.I. ULTIMATE STRENGTH

REINFORCEMENT:
ALL REINFORCING BARS SHALL BE ASTM A615 DEFORMED, BILLET STEEL GRADE 60, Fy MIN. = 60,000 P.S.I. (EXCEPT GRADE 40, Fy = 40,000 P.S.I. IN SLABS & WALL TIES). BARS TO BE BENT ACCORDING TO THE MANUAL OF STANDARD PRACTICE A.C.I. ALL REINFORCING STEEL SHALL HAVE 2" CLEAR COVER UNLESS OTHERWISE NOTED. LAP BARS MIN. 30 BAR DIAMETERS UNLESS OTHERWISE INDICATED.

CONSTRUCTION JOINTS:
NO CONSTRUCTION JOINTS SHALL BE USED, EXCEPT BY PERMISSION OF THE ENGINEER OR AS SHOWN ON THE PLANS.

PILING:
PILING SHALL BE STEEL HP12x53 & SHALL CONFORM TO ASTM A36.

FOUNDATIONS.
ABUTMENTS AND PIERS TO BE SUPPORTED BY STEEL PILING.

STRUCTURAL STEEL:
STRUCTURAL STEEL RAILINGS SHALL BE ASTM A36 PAINTED STEEL.

APPROXIMATE QUANTITIES

ITEM	STRUCTURAL EXCAVATION	STRUCTURAL BACKFILL	CONCRETE CLASS A	CONCRETE CLASS D	REINF. STEEL	PRECAST GIRDERS TYPE IV		STEEL H-PILES		BARRIER RAILING	
										PEDESTRIAN	TRAFFIC
	C.Y.	C.Y.	C.Y.	C.Y.	LBS.	NO.	LENGTH	NO.	L.F.	L.F.	L.F.
ABUTMENT NO. 1	0	111	26	32	4,000	—	—	17	847.5	12.5	25
PIER #1	620	444	—	233	40,300	—	—	34	1,422	—	—
PIER #2	620	444	—	233	40,300	—	—	34	1,422	—	—
PIER #3	620	444	—	233	40,300	—	—	34	1,422	—	—
ABUTMENT NO. 2	0	111	26	32	4,000	—	—	17	847.5	12.5	25
SUPERSTRUCTURE	—	—	—	518	177,200	24	2096	—	—	350	700
TOTAL	1860	1554	52	1,341	306,100	24	2096	136	5961	375	750

NO.	DATE	REVISION	BY	CK'D	APROV

PIMA COUNTY DEPT. OF TRANSPORTATION AND FLOOD CONTROL DISTRICT
TUCSON, AZ. C. H. HUCKELBERRY, R.L.S., P.E. DIRECTOR

BRIDGE SECTION & GENERAL NOTES
C1235

HOLBEN & MARTIN STRUCTURAL ENGINEERS
TUCSON ARIZONA

W.O. No. 4 BLARI

DESIGNED	J.R.L.	CHECKED	
DRAWN	R.J.N.	APPROVED	

SHEET 15 OF 29

LA CHOLLA BLVD., RILLITO RIVER BRIDGE

THE BORING LOGS SHOW SUBSURFACE CONDITIONS EXISTANT AT THE DATES AND LOCATIONS INDICATED, AND IT IS NOT WARRANTED THAT THEY ARE REPRESENTATIVE OF SUBSURFACE CONDITIONS AT OTHER LOCATIONS AND TIMES.

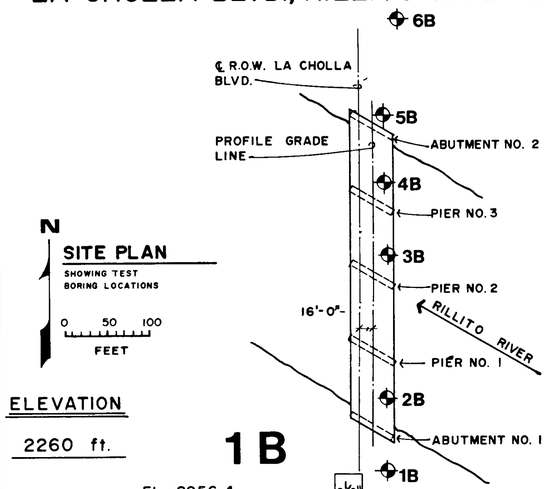

LEGEND OF BORING OPERATIONS

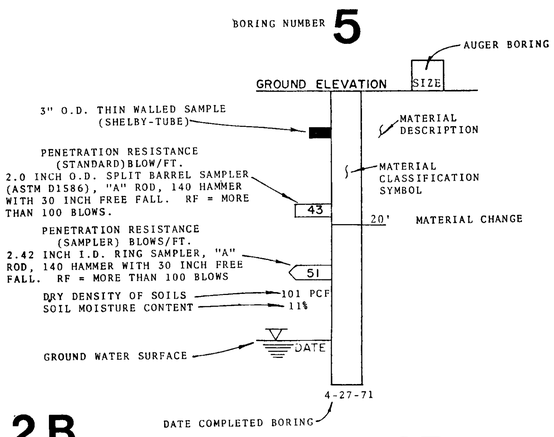

PLASTICITY CHART

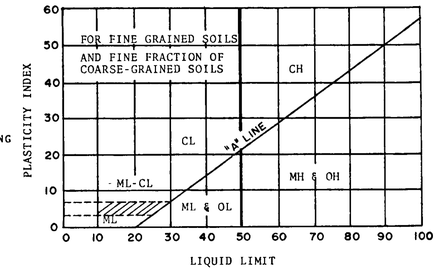

SOIL FRACTIONS

COMPONENT	SIZE RANGE
BOULDERS	ABOVE 12 IN.
COBBLES	3 IN. to 12 IN.
GRAVEL	3 IN. to NO. 4 SIEVE
COARSE GRAVEL	3 IN. to 3/4 IN.
FINE GRAVEL	3/4 IN. to NO. 4 SIEVE
SAND	NO. 4 to NO. 200
COARSE	NO. 4 to NO. 10
MEDIUM	NO. 10 to NO. 40
FINE	NO. 40 to NO. 200
FINES (SILT OR CLAY)	BELOW NO. 200 SIEVE

FINE GRAINED SOIL

MORE THAN 50% SMALLER THAN 200 SIEVE SIZE

SYMBOL	DESIG.	DESCRIPTION	MAJOR DIVISIONS
	ML	INORGANIC SILTS AND VERY FINE SANDS, ROCK FLOUR, SILTY OR CLAYEY FINE SANDS OR CLAYEY SILTS WITH SLIGHT PLASTICITY.	SILTS AND CLAYS Liquid limit less than 50.
	CL	INORGANIC CLAYS OF LOW TO MEDIUM PLASTICITY, GRAVELLY CLAYS, SANDY CLAYS, SILTY CLAYS, LEAN CLAYS	
	OL	ORGANIC SILTS AND ORGANIC SILT-CLAYS OF LOW PLASTICITY	
	MH	INORGANIC SILTS, MICACEOUS OR DIATOMACEOUS FINE SANDY OR SILTY SOILS, ELASTIC SILTS	SILTS AND CLAYS Liquid limit greater than 50.
	CH	INORGANIC CLAYS OF HIGH PLASTICITY, FAT CLAYS	
	OH	ORGANIC CLAYS OF MEDIUM TO HIGH PLASTICITY, ORGANIC SILTS	
	PT	PEAT AND OTHER HIGHLY ORGANIC SOILS	

COARSE-GRAINED SOIL

MORE THAN 50% LARGER THAN 200 SIEVE SIZE

SYMBOL	DESIG.	DESCRIPTION	MAJOR DIVISIONS
	GW	WELL-GRADED GRAVELS OR GRAVEL-SAND MIXTURES, LESS THAN 5%-200 FINES	GRAVELS More than half of coarse fraction is larger than No. 4 sieve size.
	GP	POORLY-GRADED GRAVELS OR GRAVEL-SAND MIXTURES, LESS THAN 5%- 200 FINES	
	GM	SILTY GRAVELS, GRAVEL-SAND-SILT MIXTURES, MORE THAN 12%-200 FINES	
	GC	CLAYEY GRAVELS, GRAVEL-SAND-CLAY MIXTURES, MORE THAN 12%-200 FINES	
	SW	WELL GRADED SANDS OR GRAVELLY SANDS, LESS THAN 5% - 200 FINES	SANDS More than half of coarse fraction is smaller than No. 4 sieve size.
	SP	POORLY-GRADED SANDS OR GRAVELLY SANDS, LESS THAN 5% - 200 FINES	
	SM	SILTY SANDS, SAND-SILT MIXTURES MORE THAN 12% - 200 FINES	
	SC	CLAYEY SANDS, SAND-CLAY MIXTURES MORE THAN 12% - 200 FINES	

NOTE-Soils with 5 to 12 percent minus 200 fines should be classified with dual symbols.

ELEVATION

2260 ft. 2255 ft. 2250 ft. 2245 ft. 2240 ft. 2235 ft. 2230 ft. 2225 ft. 2220 ft. 2215 ft. 2210 ft. 2205 ft. 2200 ft. 2195 ft. 2190 ft. 2185 ft. 2180 ft. 2175 ft.

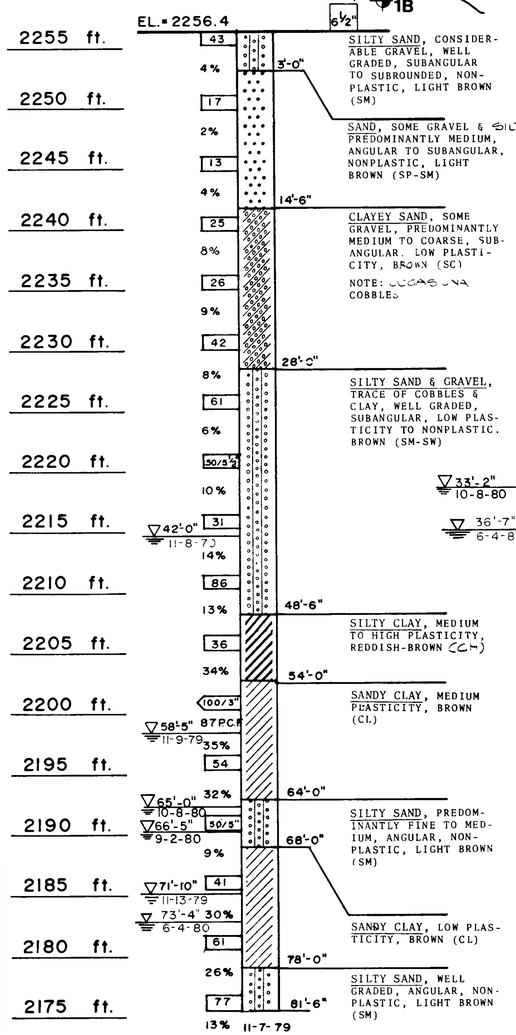

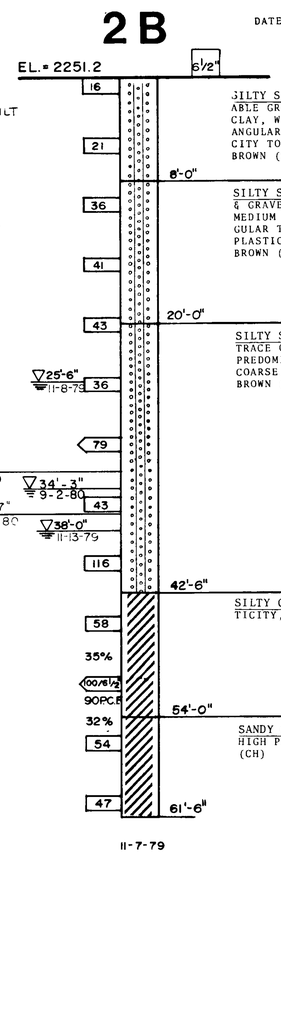

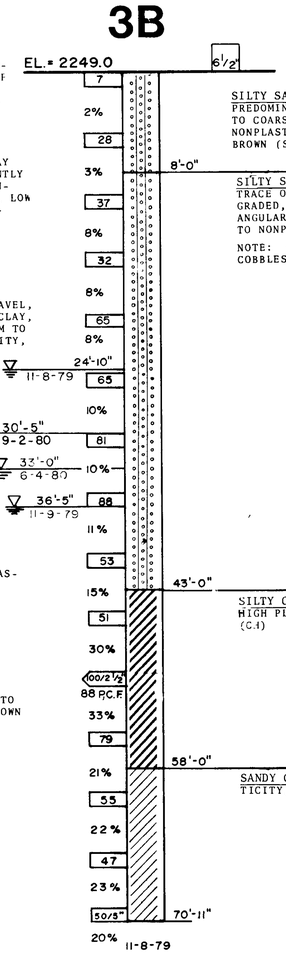

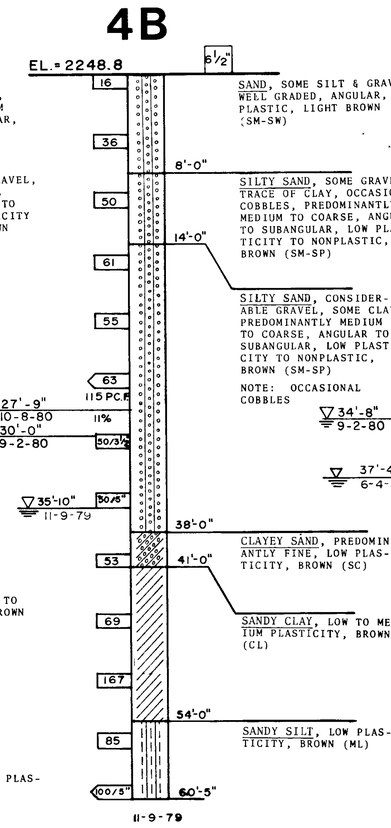

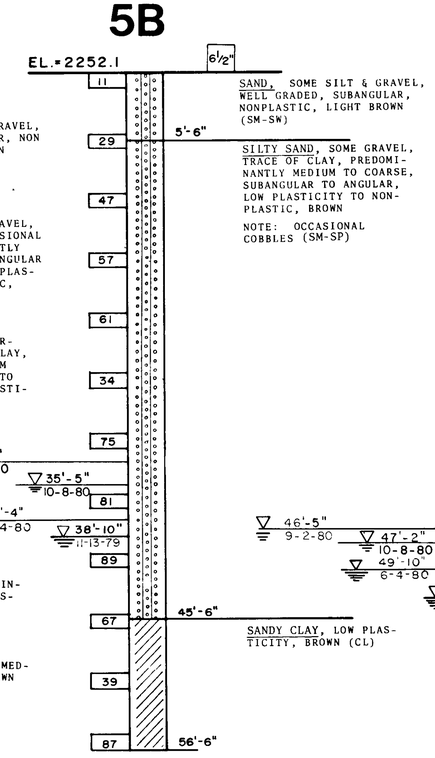

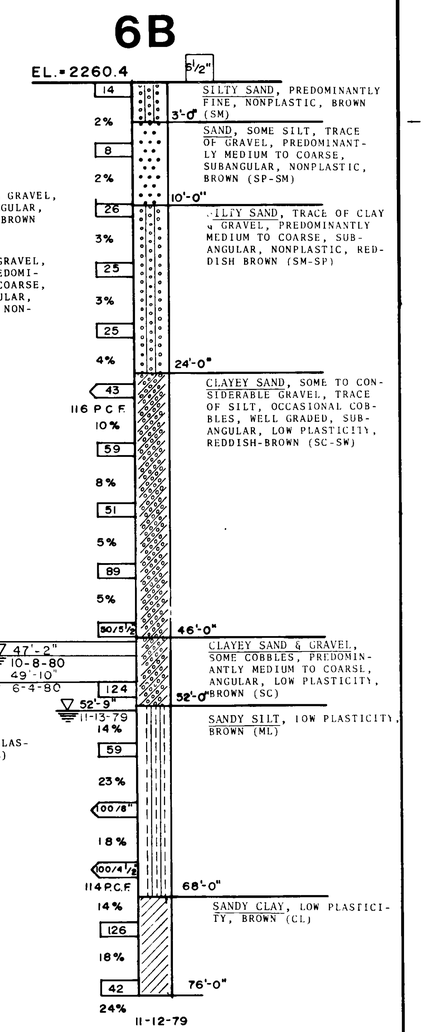

NO.	DATE	REVISION	BY	CK'D	APROV
1	11-3-80	GROUNDWATER LEV.			

HOLBEN & MARTIN
STRUCTURAL ENGINEERS
TUCSON ARIZONA

PIMA COUNTY DEPT. OF TRANSPORTATION AND FLOOD CONTROL DISTRICT
TUCSON, AZ. C. H. HUCKELBERRY, R.L.S., P.E. DIRECTOR

LOG OF SOIL BORINGS

C1236

W.O. NO. 4 SHEET

DESIGNED | CHECKED | DRAWN | APPROVED

SHEET 16 OF 29

LA CHOLLA BLVD., RILLITO RIVER BRIDGE

VERTICAL PILE

BATTER PILES

BATTER PILES 4:1

TOP OF PILE

SPLICE AFTER DRIVING

SPLICE IN LEADS

SPLICE PAID FOR

GROUND SPLICE

SHOP SPLICE

TIP OF PILE (NOT TO INCLUDE PILE PT.)

PILE LEGEND

P = BEARING CAPACITY IN POUNDS
W = WEIGHT OF RAM IN POUNDS
H = LENGTH OF STROKE IN FEET
S = AVG. PENETRATION PER BLOW IN INCHES, OF LAST 5 BLOWS
A = AREA OF PISTON IN SQ. INCHES
P_1 = MEAN EFFECTIVE PRESSURE IN POUNDS PER SQ. IN. IN WORKING CYLINDER

HAMMER DATA

TYPE_____

MAKE_____

WEIGHT OF RAM_____

STROKE_____

AREA OF PISTON_____

EFFECTIVE CYLINDER PRESSURE (FOR CLOSED CHAMBER DIESEL HAMMERS)_____

HP 12×53 PILING				
PAY QUANTITIES				
ITEM NO.	DESCRIPTION	UNIT	AS PER PLAN	AS BUILT
512A	FURNISHING STEEL PILES	L.F.	5961'	
512B	DRIVING STEEL PILES	L.F.	5961'	
512C	SPLICING STEEL PILES	EA.	50	

ABUTMENT NO. 1

PILE NUMBER	1	2	△ 3	4	5	6	7	8	9	10	11	12	13	14	15	16	△ 17
ELEVATION-TOP OF PILE																	
LENGTH OF STROKE IN FT. (DIESEL)																	
AVG. PENETRATION - S IN.																	
SAFE BEARING - TONS																	
LINEAL FT. OF EACH PIECE FURNISHED																	
ELEVATION-TIP OF PILE																	

PIER NO. 1

PILE NUMBER	△ 1	△ 2	3	△ 4	5	△ 6	7	△ 8	△ 9	10	△ 11	12	△ 13	14	△ 15	△ 16	△ 17	△ 18	△ 19	20	△ 21	22	△ 23	24
ELEVATION-TOP OF PILE																								
LENGTH OF STROKE IN FT. (DIESEL)																								
AVG. PENETRATION - S IN.																								
SAFE BEARING - TONS																								
LINEAL FT. OF EACH PIECE FURNISHED																								
ELEVATION-TIP OF PILE																								

PIER NO. 1 (cont.)

PILE NUMBER	△ 25	△ 26	27	△ 28	29	△ 30	31	△ 32	△ 33	△ 34
ELEVATION-TOP OF PILE										
LENGTH OF STROKE IN FT. (DIESEL)										
AVG. PENETRATION - S IN.										
SAFE BEARING - TONS										
LINEAL FT. OF EACH PIECE FURNISHED										
ELEVATION-TIP OF PILE										

PIER NO. 2

PILE NUMBER	△ 1	△ 2	3	△ 4	5	△ 6	7	△ 8	△ 9	10	△ 11	12	△ 13	14	△ 15	△ 16	△ 17	△ 18	△ 19	20	△ 21	22	△ 23	24
ELEVATION-TOP OF PILE																								
LENGTH OF STROKE IN FT. (DIESEL)																								
AVG. PENETRATION - S IN.																								
SAFE BEARING - TONS																								
LINEAL FT. OF EACH PIECE FURNISHED																								
ELEVATION-TIP OF PILE																								

PIER NO. 2 (cont.)

PILE NUMBER	△ 25	△ 26	27	△ 28	29	△ 30	31	△ 32	△ 33	△ 34
ELEVATION-TOP OF PILE										
LENGTH OF STROKE IN FT. (DIESEL)										
AVG. PENETRATION - S IN.										
SAFE BEARING - TONS										
LINEAL FT. OF EACH PIECE FURNISHED										
ELEVATION-TIP OF PILE										

PIER NO. 3

PILE NUMBER	△ 1	△ 2	3	△ 4	5	△ 6	7	△ 8	△ 9	10	△ 11
ELEVATION-TOP OF PILE											
LENGTH OF STROKE IN FT. (DIESEL)											
AVG. PENETRATION - S IN.											
SAFE BEARING - TONS											
LINEAL FT. OF EACH PIECE FURNISHED											
ELEVATION-TIP OF PILE											

SEE NEXT SHEET FOR CONTINUATION OF PILE DATA, AND NOTES

HOLBEN & MARTIN
STRUCTURAL ENGINEERS
TUCSON ARIZONA

NO	DATE	REVISION	BY	CK'D	APROV

PIMA COUNTY DEPT. OF TRANSPORTATION AND FLOOD CONTROL DISTRICT
TUCSON, AZ C. H. HUCKELBERRY, R.L.S., P.E. DIRECTOR

PILE BEARING RECORD

C1237

W.O. [illegible]

DESIGNED [illegible] CHECKED

DRAWN [illegible] APPROVED

SHEET 1 OF 29

LA CHOLLA BLVD., RILLITO RIVER BRIDGE

NOTES:

1. CONTRACTOR SHALL DRIVE TEST PILES AS SHOWN ON PLANS. PILE LOADING TEST SHALL BE PROVIDED AS DIRECTED BY ENGINEER. SEE SPECIAL PROVISIONS.

2. ANY PILE WHICH IS DRIVEN TO A BEARING OF 1 3/4 TIMES THE BEARING VALUE REQUIRED ON DRAWINGS & WHICH REACHES A PILE TIP ELEVATION WITHIN 3 FEET OF THE ESTIMATED TIP ELEVATION SHALL BE CONSIDERED ACCEPTABLE.

PIER NO. 3 (cont.)

PILE NUMBER	12	△ 13	14	△ 15	△ 16	△ 17	△ 18	△ 19	20	△ 21	22	△ 23	24	△ 25	△ 26	27	△ 28	29	△ 30	31	△ 32	△ 33	△ 34
ELEVATION-TOP OF PILE																							
LENGTH OF STROKE IN FT. (DIESEL)																							
AVG. PENETRATION - S IN.																							
SAFE BEARING - TONS																							
LINEAL FT. OF EACH PIECE FURNISHED																							
ELEVATION-TIP OF PILE																							

ABUTMENT NO. 2

PILE NUMBER	1	2	△ 3	4	5	6	7	8	9	10	11	12	13	14	15	16	△ 17
ELEVATION-TOP OF PILE																	
LENGTH OF STROKE IN FT. (DIESEL)																	
AVG. PENETRATION - S IN.																	
SAFE BEARING - TONS																	
LINEAL FT. OF EACH PIECE FURNISHED																	
ELEVATION-TIP OF PILE																	

PILE NUMBER	
ELEVATION-TOP OF PILE	
LENGTH OF STROKE IN FT. (DIESEL)	
AVG. PENETRATION - S IN.	
SAFE BEARING - TONS	
LINEAL FT. OF EACH PIECE FURNISHED	
ELEVATION-TIP OF PILE	

PILE NUMBER	
ELEVATION-TOP OF PILE	
LENGTH OF STROKE IN FT. (DIESEL)	
AVG. PENETRATION - S IN.	
SAFE BEARING - TONS	
LINEAL FT. OF EACH PIECE FURNISHED	
ELEVATION-TIP OF PILE	

PILE NUMBER	
ELEVATION-TOP OF PILE	
LENGTH OF STROKE IN FT. (DIESEL)	
AVG. PENETRATION - S IN.	
SAFE BEARING - TONS	
LINEAL FT. OF EACH PIECE FURNISHED	
ELEVATION-TIP OF PILE	

PILE NUMBER	
ELEVATION-TOP OF PILE	
LENGTH OF STROKE IN FT. (DIESEL)	
AVG. PENETRATION - S IN.	
SAFE BEARING - TONS	
LINEAL FT. OF EACH PIECE FURNISHED	
ELEVATION-TIP OF PILE	

HOLBEN & MARTIN
STRUCTURAL ENGINEERS
TUCSON ARIZONA

NO.	DATE	REVISION	BY	CK'D	APROV

PIMA COUNTY DEPT. OF TRANSPORTATION AND FLOOD CONTROL DISTRICT
TUCSON, AZ. C. H. HUCKELBERRY, R.L.S., P.E. DIRECTOR

PILE BEARING RECORD (CONT.)

C1238

DESIGNED JRL CHECKED
DRAWN RJH APPROVED
W.O. NO. 6 SHEET

LA CHOLLA BLVD., RILLITO RIVER BRIDGE

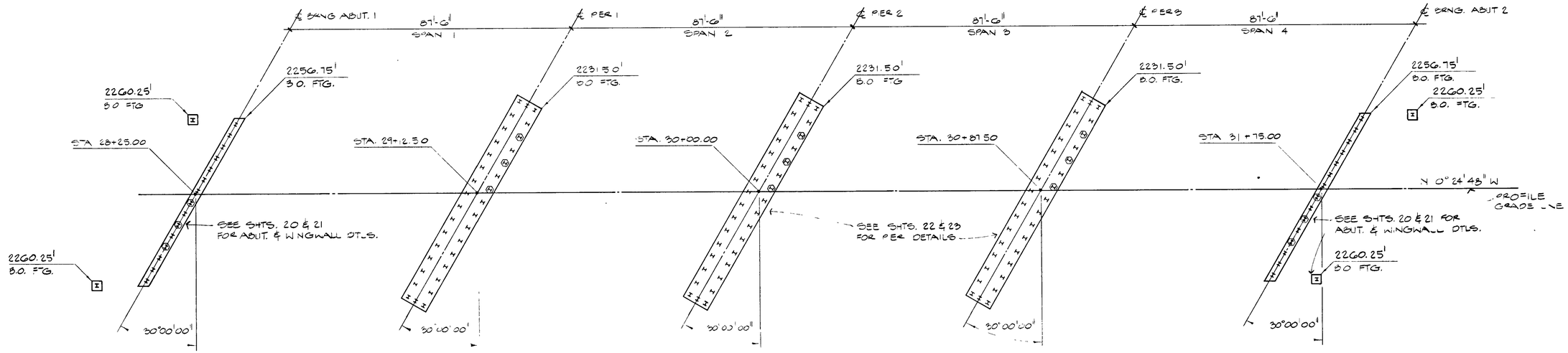

FOUNDATION PLAN
1/16" = 1'-0"

NORTH

NOTES:

1. SEE GENERAL NOTES ON SHT. 15.
2. ALL ELEVATIONS ARE TO BOTTOM OF FOOTING.
3. SEE SHT. 22 FOR PIER PILE NUMBERS AND BATTER AND SHTS. 20 AND 21 FOR ABUTMENT PILE BATTER AND NUMBERS.
4. I INDICATES HP 12x53 PILES.
5. (I) INDICATES PILES TO BE TEST DRIVEN.

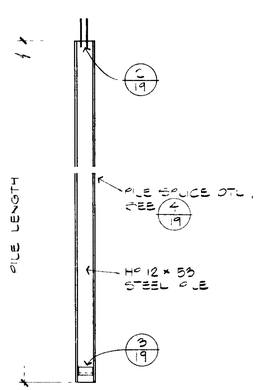

TYP. HP PILE DETAIL (1)
NO SCALE

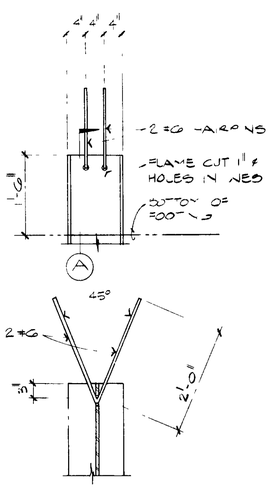

SECTION (A)

STEEL HP PILE ANCHOR (2)
NO SCALE

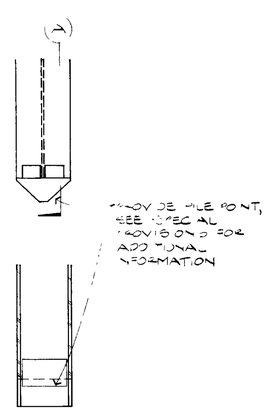

SECTION (A)

TYP. PILE POINT (3)
NO SCALE

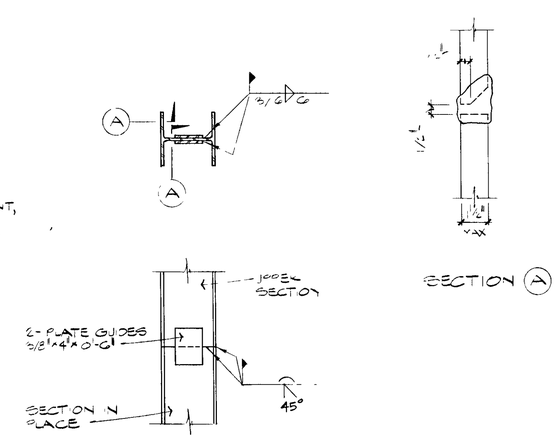

PILE SPLICE DETAIL (4)
NO SCALE

PILE SPLICE NOTES:

1) WHEN PILING IS TO BE SPLICED FOR FURTHER DRIVING, UPPER SECTION SHALL BE LOWERED ON SECTION IN PLACE AND TAPPED LIGHTLY WITH HAMMER TO FULL BEARING BEFORE BUTT WELDS ARE MADE. WHEN PILING IS TO BE EXTENDED WITHOUT FURTHER DRIVING, OMIT GUIDE PLS AND MAKE BUTT WELDS CONTINUOUS ACROSS WEB, IN ADDITION TO FULL FLANGE WELDS.

2) WELDING SHALL CONFORM TO AMERICAN WELDING SOCIETY SPECIFICATIONS FOR STRUCTURAL WELDING, LATEST EDITION.

HOLBEN & MARTIN
STRUCTURAL ENGINEERS
TUCSON ARIZONA

NO.	DATE	REVISION	BY	CK'D	APROV

PIMA COUNTY DEPT. OF TRANSPORTATION AND FLOOD CONTROL DISTRICT
TUCSON, AZ. C. H. HUCKELBERRY, R.L.S., P.E. DIRECTOR

FOUNDATION PLAN & DETAILS

C1239

DESIGNED	O.R.L.	CHECKED	
DRAWN	G.J.N.	APPROVED	

W.O. No. 4 BLAH

SHEET 19 OF 29

LA CHOLLA BLVD., RILLITO RIVER BRIDGE

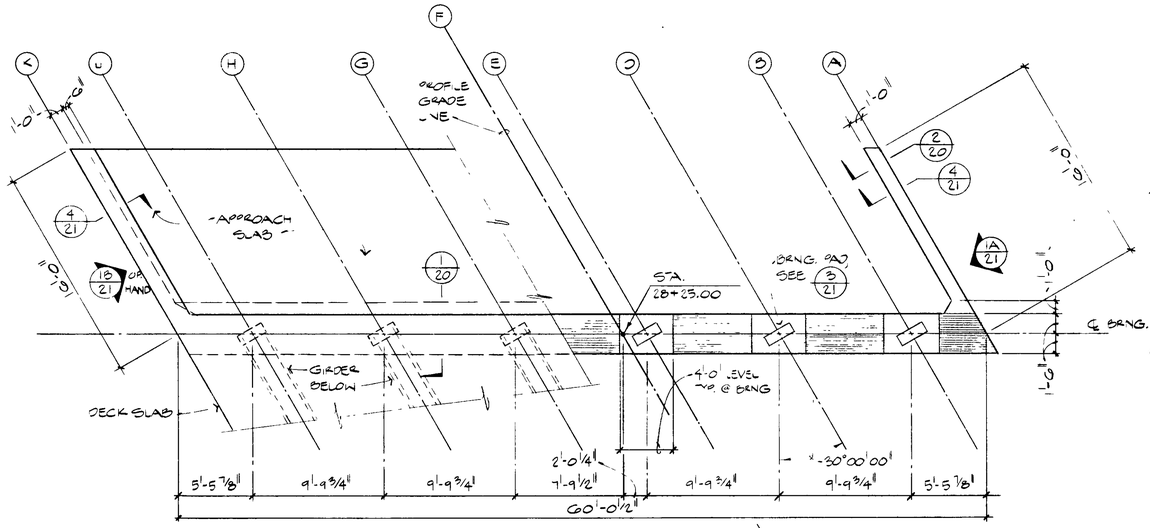

PLAN-ABUTMENT NO. 1
3/16" = 1'-0"

NORTH

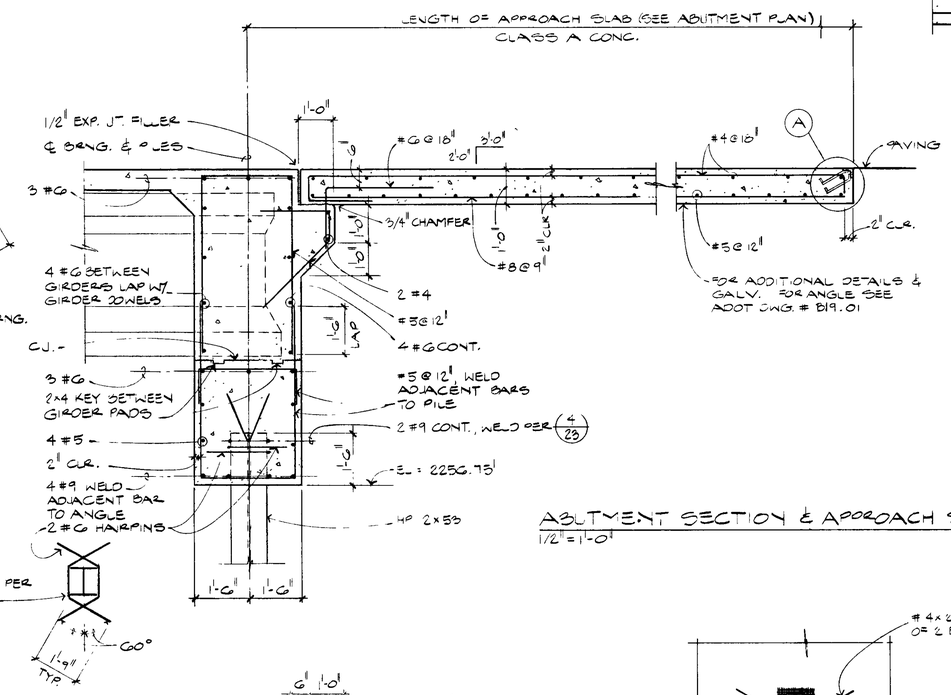

ABUTMENT SECTION & APPROACH SLAB (1)
1/2" = 1'-0"

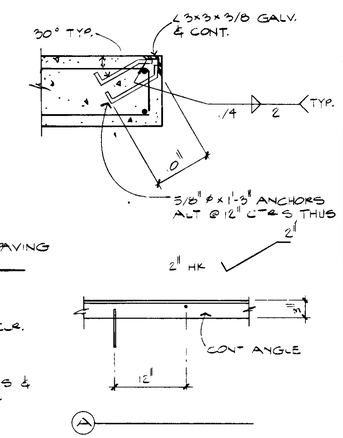

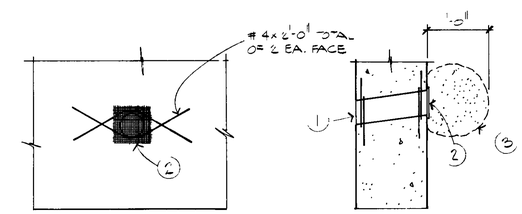

ELEVATION SECTION

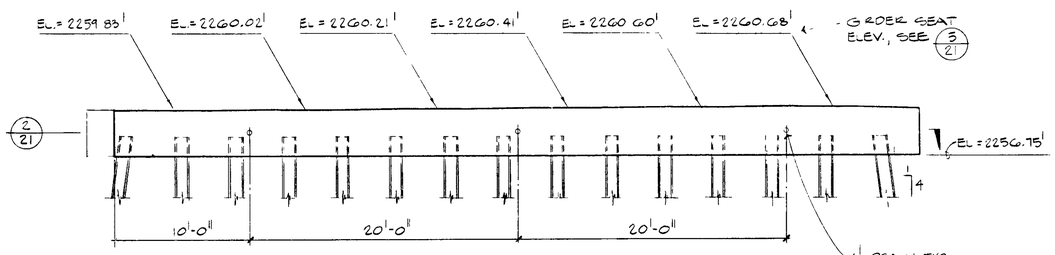

ELEVATION
3/16" = 1'-0"

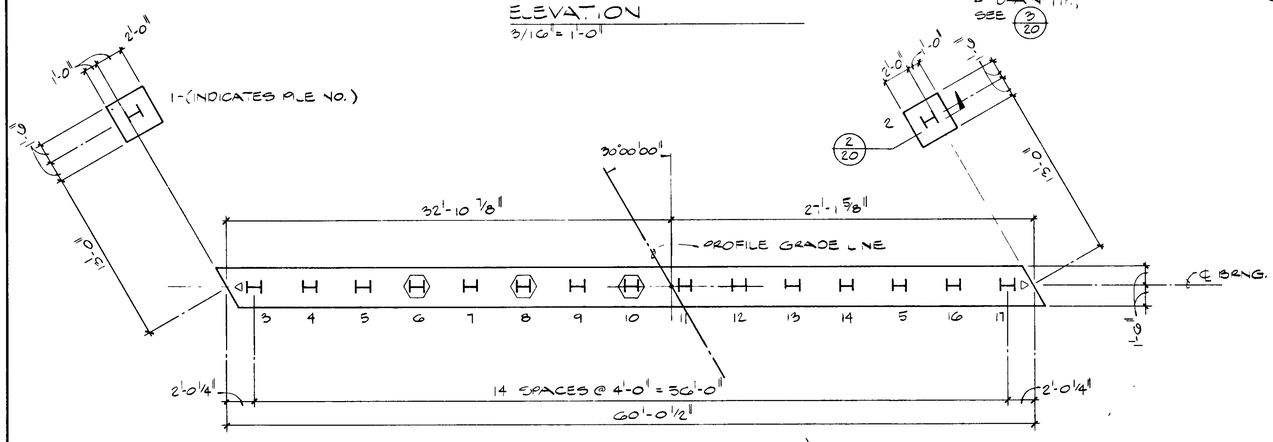

FOUNDATION PLAN
3/16" = 1'-0"

NORTH

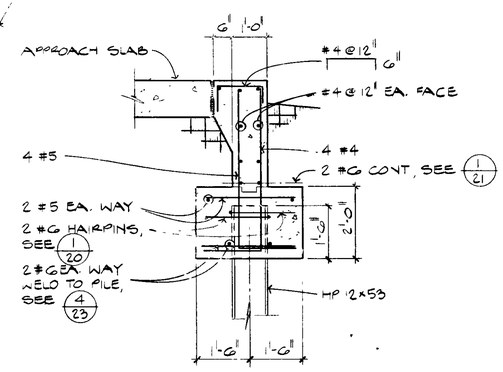

SECTION AT WINGWALL (2)
1/2" = 1'-0"

PILE DATA		
LOCATION	ABUT'T.	WINGWALL
CAPACITY	140ᵏ	140ᵏ
MIN. PILE TIP ELEV.	2209'	2209'
EST LENGTH STRAIGHT PILE	49'-3"	52'-9"
EST LENGTH BATTERED PILE	50'-9"	—

NOTES:

1. ALL PILES TO BE HP12x53
2. ◁H INDICATES BATTERED PILES (1:4)
3. PREDRILLING FOR ABUTMENT PILES SHALL NOT EXTEND BELOW ELEV. 2239'.
4. PLACE BACKFILL BEHIND BOTH ABUTMENTS SIMULTANEOUSLY.

NOTES:

1. 4" DRAINS. EXPOSED WALL DRAINS SHALL BE LOCATED ±3" ABOVE FINISH GRADE
2. 6' SQ. ALUMINUM OR GALVANIZED STEEL WIRE 4 MESH HARDWARE CLOTH. (MIN. WIRE DIAM. 0.03") ANCHOR FIRMLY TO BACKFACE.
3. ONE CUBIC FOOT PERVIOUS BACKFILL MATL. IN A BURLAP SACK SECURELY TIED.

WEEP HOLE & PERVIOUS BACKFILL (3)
NO SCALE

NO.	DATE	REVISION	BY	CK'D	APROV

PIMA COUNTY DEPT. OF TRANSPORTATION AND FLOOD CONTROL DISTRICT
TUCSON, AZ. C. H. HUCKELBERRY, R.L.S., P.E. DIRECTOR

SOUTH ABUTMENT & DETAILS

C12.40

HOLBEN & MARTIN STRUCTURAL ENGINEERS
TUCSON ARIZONA

W.O. Nº 4 BLAR	DESIGNED	D.R.L.	CHECKED
	DRAWN	R.J.N.	APPROVED

SHEET 20 OF 29

LA CHOLLA BLVD., RILLITO RIVER BRIDGE

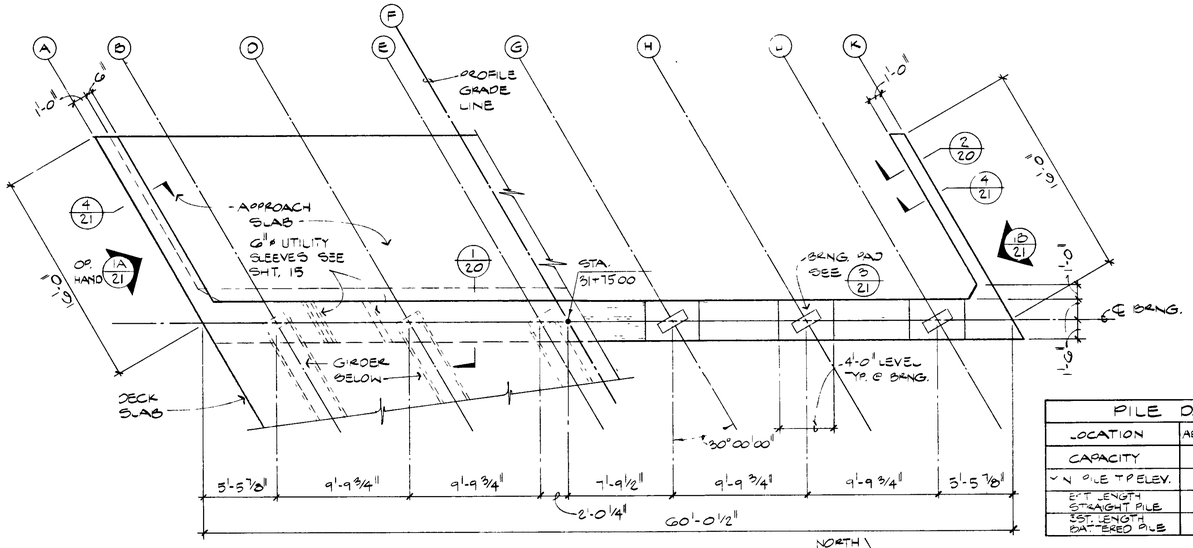

PLAN @ ABUTMENT NO. 2
3/16" = 1'-0"

PILE DATA		
LOCATION	ABUT. PILES	WINGWALLS
CAPACITY	140K	140K
~N PILE TP ELEV.	2209'	2209'
EST. LENGTH STRAIGHT PILE	44'-3"	52'-9"
EST. LENGTH BATTERED PILE	50'-9"	—

NOTES:

1. ALL PILES TO BE HP 12×53
2. 1H INDICATES BATTERED PILE (1:4)
3. PREDRILLING FOR ABUTMENT PILES SHALL NOT EXTEND BELOW EL.= 2239'
4. PLACE BACKFILL BEHIND BOTH ABUTMENTS SIMULTANEOUSLY.

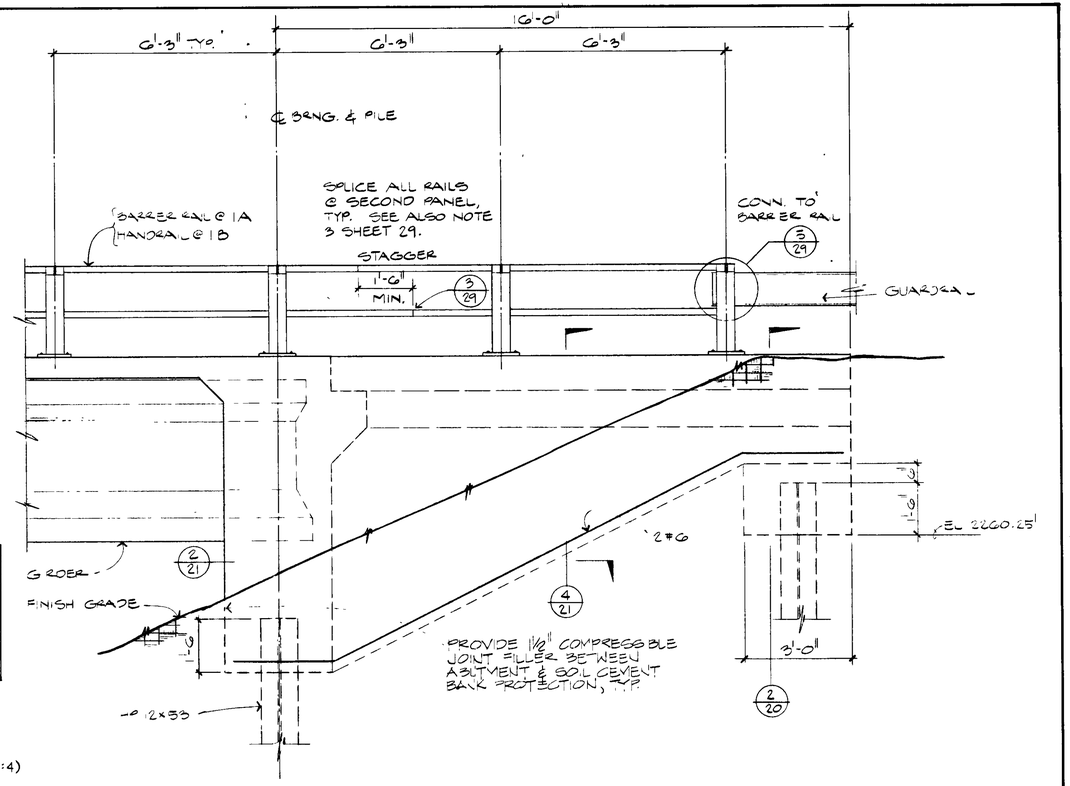

WINGWALL ELEVATION (1)
1/2" = 1'-0"

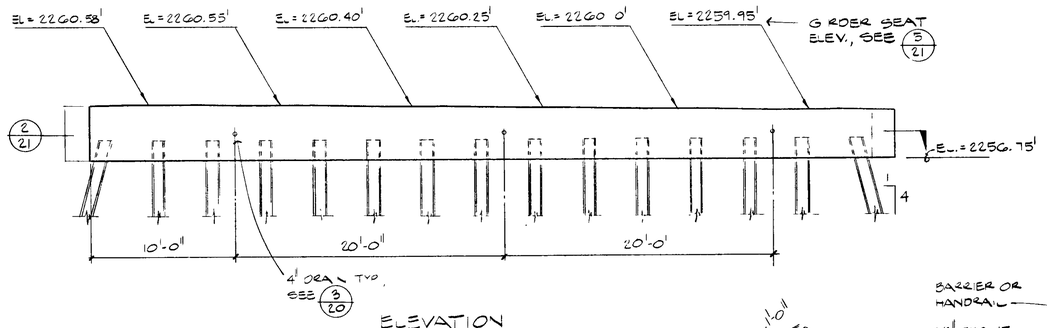

ELEVATION
3/16" = 1'-0"

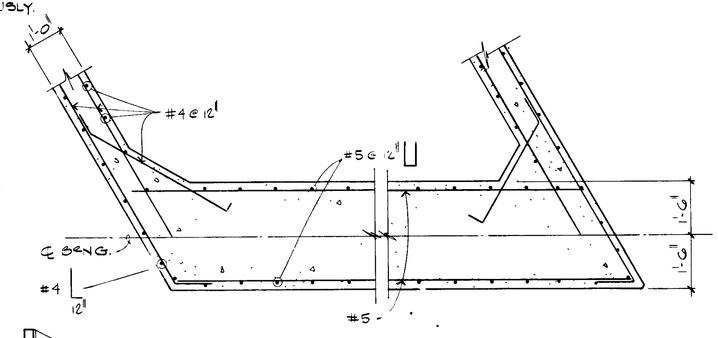

SECTION (2)
1/2" = 1'-0"

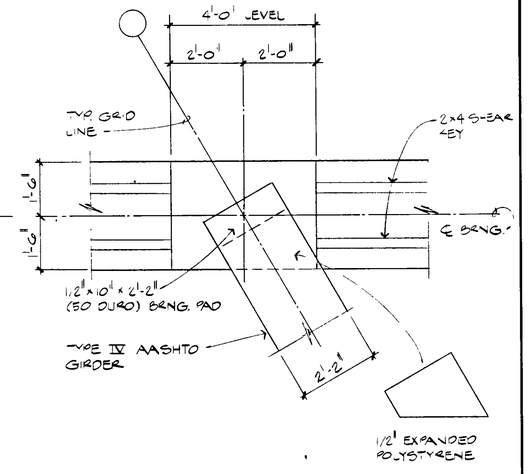

(3)
1/2" = 1'-0"

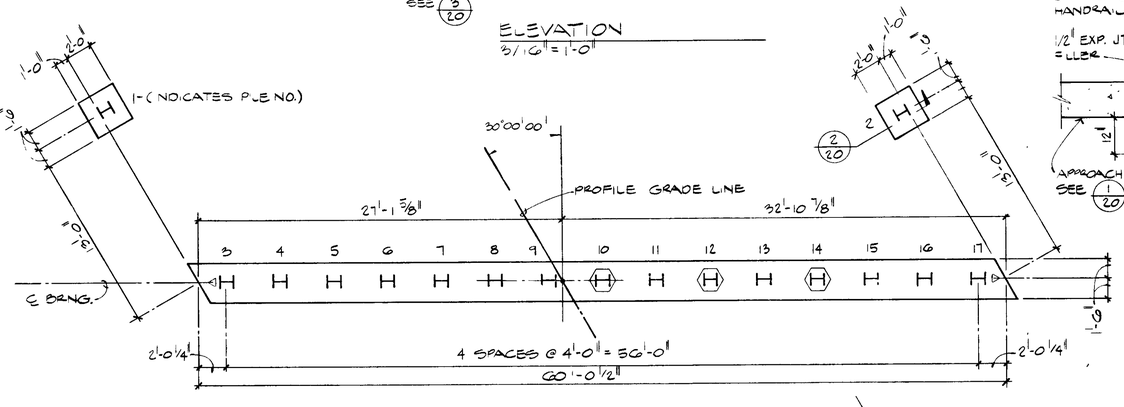

FOUNDATION PLAN
3/16" = 1'-0"

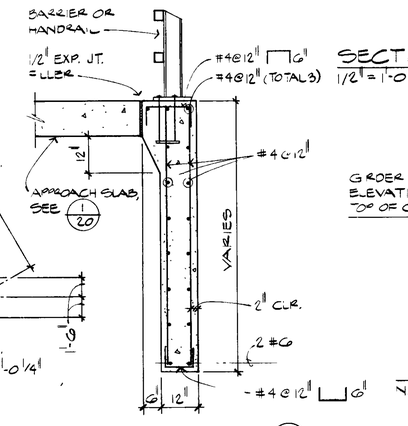

(4)
1/2" = 1'-0"

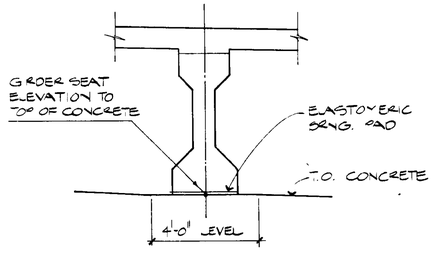

(5)
N.T.S.

NO.	DATE	REVISION	BY	CK'D	APROV

PIMA COUNTY DEPT. OF TRANSPORTATION AND FLOOD CONTROL DISTRICT
TUCSON, AZ. C. H. HUCKELBERRY, R.L.S., P.E. DIRECTOR

NORTH ABUTMENT & WINGWALLS

C1241

HOLBEN & MARTIN STRUCTURAL ENGINEERS
TUCSON ARIZONA

DESIGNED	D.R.L.	CHECKED		SHEET 21 OF 29
DRAWN	R.J.N.	APPROVED		

W.O. NO. 4 SLARI

LA CHOLLA BLVD, RILLITO RIVER BRIDGE

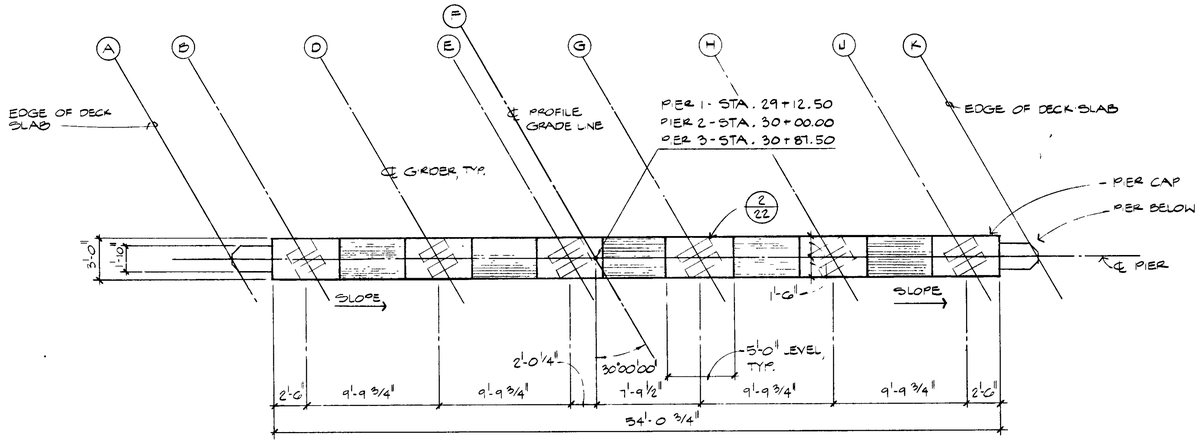

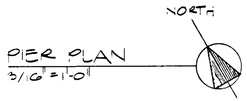

PIER PLAN
3/16" = 1'-0"

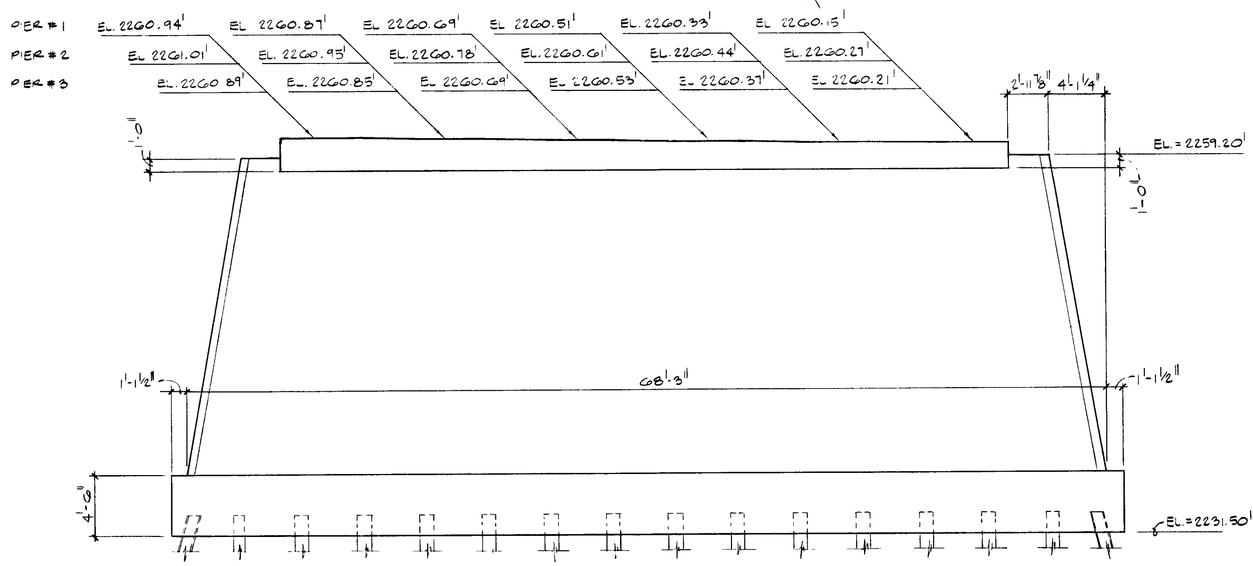

PIER ELEVATION
3/16" = 1'-0"

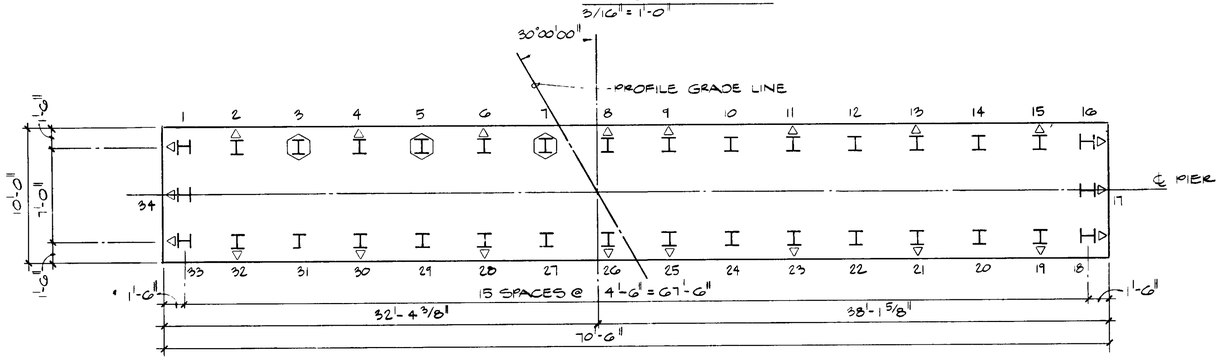

FOUNDATION PLAN
3/16" = 1'-0"

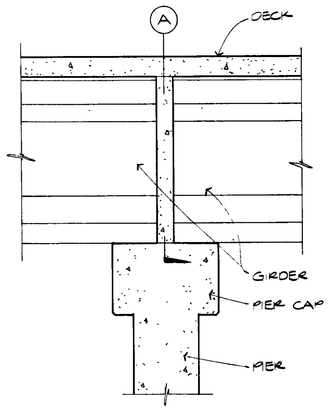

SECTION @ CTR OF GIRDER

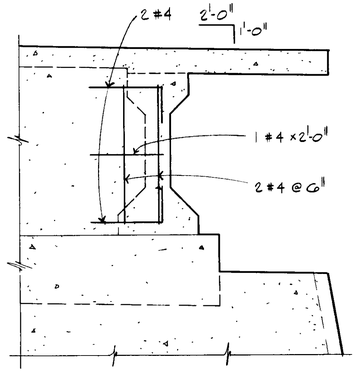

PLACE BARS ON CTR. BTWN. FASCIA GIRDER ENDS

SECTION (A)

DIAPHRAGM REINF. AT GIRDER ENDS (1)
1/2" = 1'-0"

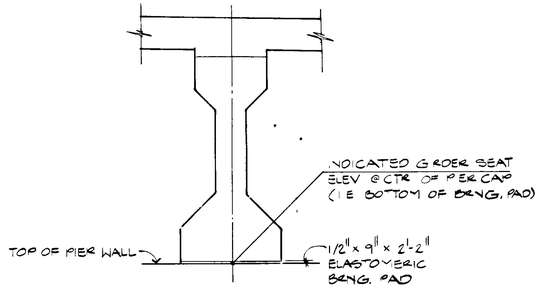

GIRDER BEARING @ PIER (2)
N.T.S.

PILE DATA	
CAPACITY	135K
MIN. PILE TIP PENETRATION	2192'
EST. LENGTH STRAIGHT PILE	41'-0"
EST. LENGTH BATTERED PILE	42'-3"

NOTES:

1. ALL PILES TO BE HP12x53
2. ◁H INDICATES BATTERED PILES (4:1)
3. THERE SHALL BE NO PREDRILLING FOR PIER PILES.
4. (I) INDICATES PILES TO BE TEST DRIVEN.

NO.	DATE	REVISION	BY	CK'D	APROV

PIMA COUNTY DEPT. OF TRANSPORTATION AND FLOOD CONTROL DISTRICT
TUCSON, AZ. C. H. HUCKELBERRY, R.L.S., P.E. DIRECTOR

TYP. PIER PLAN, FOUNDATION & ELEV.

C1242

HOLBEN & MARTIN STRUCTURAL ENGINEERS
TUCSON ARIZONA

DESIGNED	J.R.L.		CHECKED	
DRAWN	R.J.N.		APPROVED	

W.O. No. 4 BLAKI

SHEET 22 OF 29

LA CHOLLA BLVD., RILLITO RIVER BRIDGE

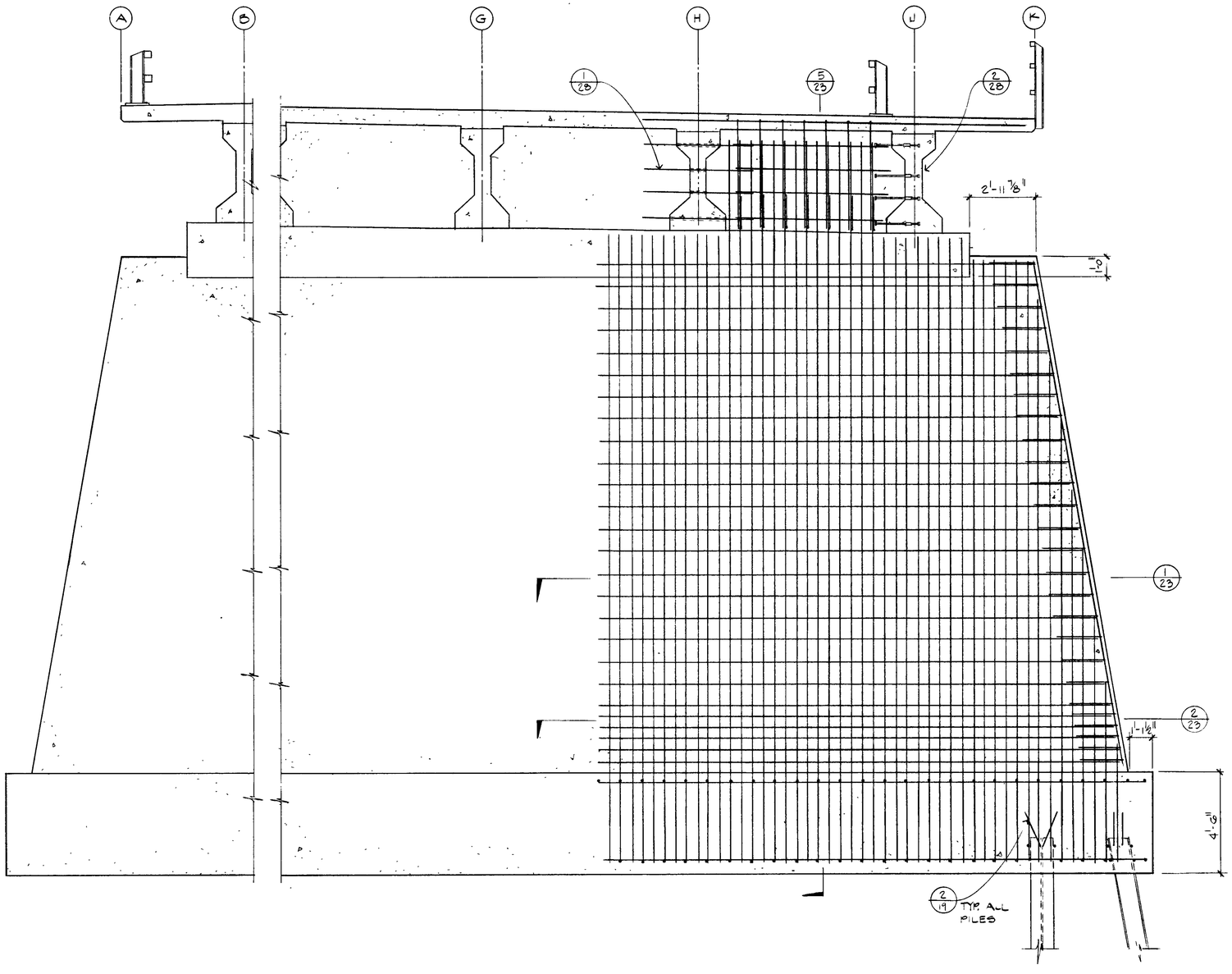

TYP. PIER ELEVATION
3/8" = 1'-0"

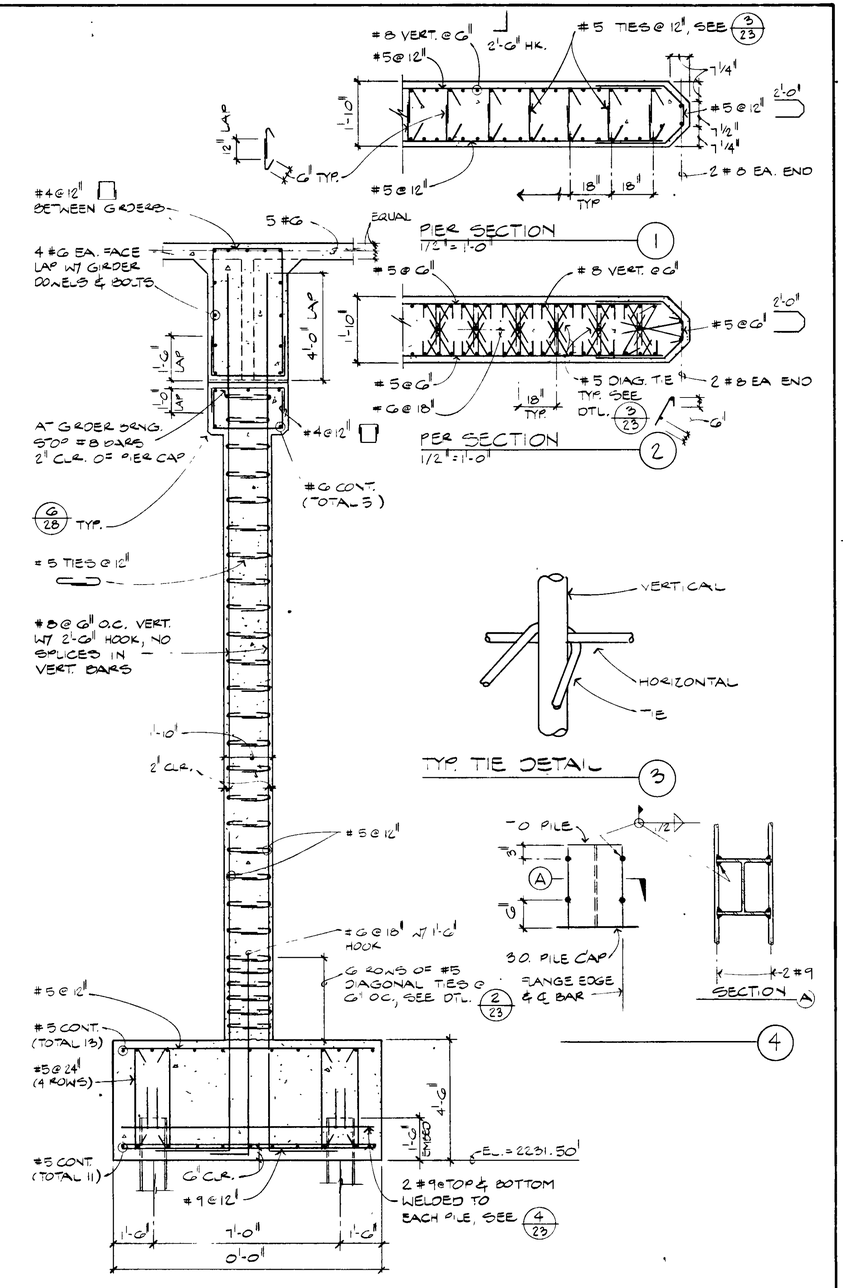

TYP. PIER WALL SECTION 5
3/8" = 1'-0"

NO.	DATE	REVISION	BY	CK'D	APROV.

PIMA COUNTY DEPT. OF TRANSPORTATION AND FLOOD CONTROL DISTRICT
TUCSON, AZ. C. H. HUCKELBERRY, R.L.S., P.E. DIRECTOR

TYP. PIER REINFORCING DETAILS

C1243

HOLBEN & MARTIN STRUCTURAL ENGINEERS
TUCSON ARIZONA

W.O. No. 4 BLARI	DESIGNED	J.R.L.	CHECKED		SHEET 23 OF 29
	DRAWN	R.J.N.	APPROVED		

LA CHOLLA BLVD., RILLITO RIVER BRIDGE

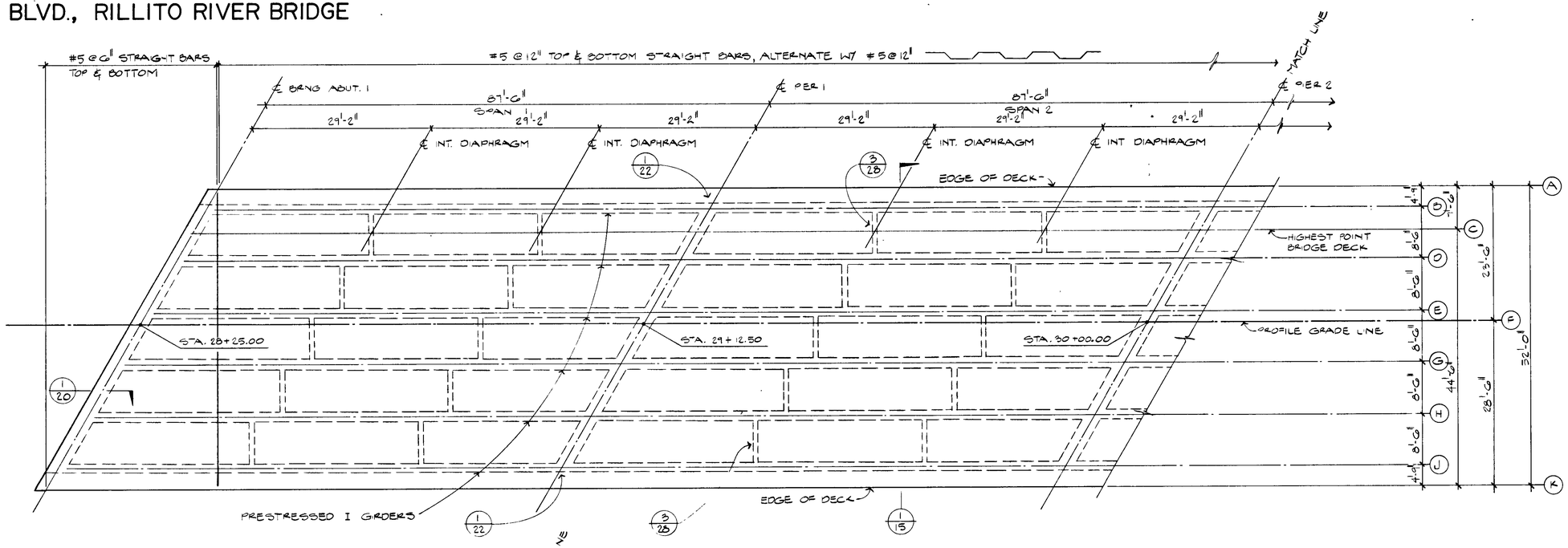

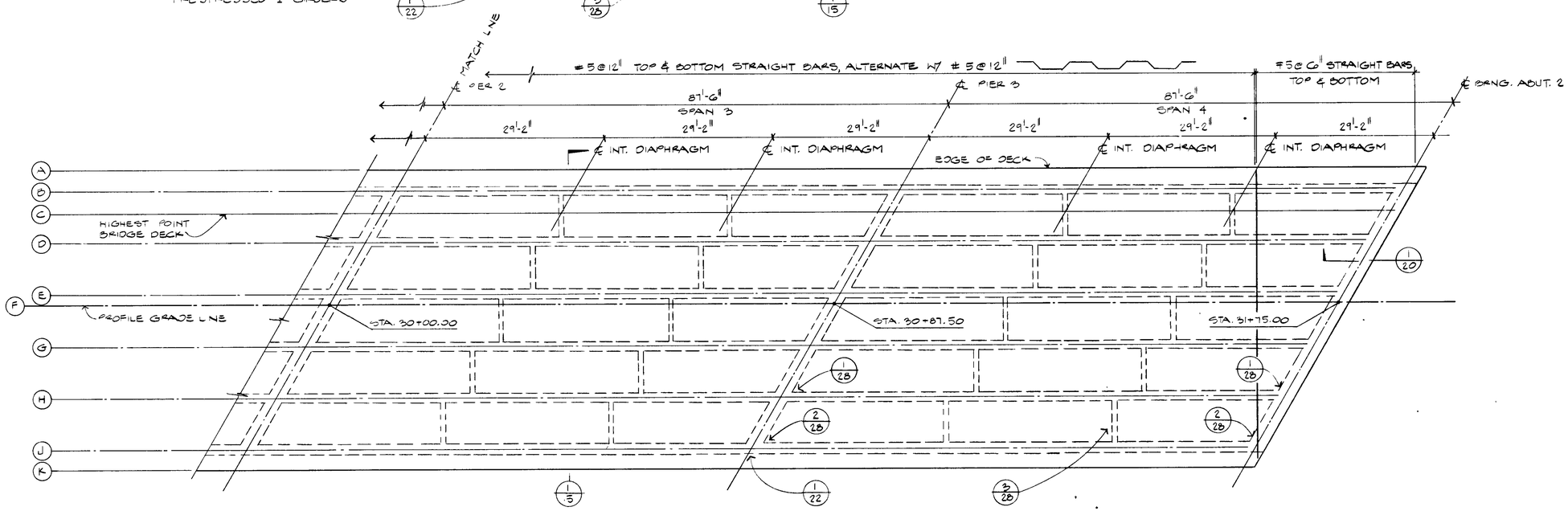

DECK PLAN
1" = 10'-0"

NORTH

NO.	DATE	REVISION	BY	CK'D	APROV

PIMA COUNTY DEPT. OF TRANSPORTATION AND FLOOD CONTROL DISTRICT
TUCSON, AZ. C. H. HUCKELBERRY, R.L.S., P.E. DIRECTOR

BRIDGE DECK PLAN

C1244

HOLBEN & MARTIN STRUCTURAL ENGINEERS
TUCSON ARIZONA

DESIGNED	D.R.L.	CHECKED		SHEET 24 OF 29
DRAWN	R.J.N.	APPROVED		

W.O. Nº 4 BLARI

LA CHOLLA BLVD., RILLITO RIVER BRIDGE

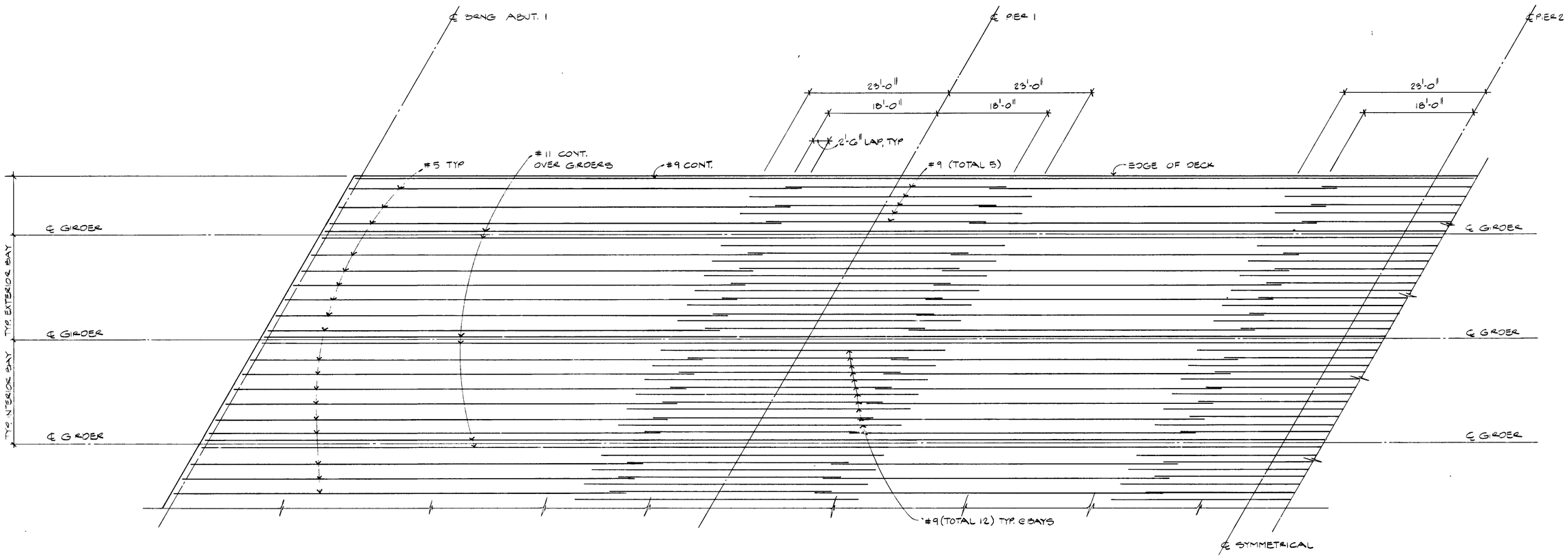

TYPICAL DECK REINFORCING PLAN

SCALE: HORIZ. 1/8" = 1'-0"
VERT. 1/4" = 1'-0"

NOTES:

1.) ALL REINF. BARS OVER PIERS TO BE #9 UNLESS NOTED OTHERWISE.

2.) ALL CONT. BARS TO BE LAPPED IN MIDDLE 1/3 OF SPAN ONLY. STAGGER SPLICES.

NO.	DATE	REVISION	BY	CK'D	APROV

PIMA COUNTY DEPT. OF TRANSPORTATION AND FLOOD CONTROL DISTRICT
TUCSON, AZ. C. H. HUCKELBERRY, R.L.S., P.E. DIRECTOR

HOLBEN & MARTIN
STRUCTURAL ENGINEERS
TUCSON ARIZONA

DECK REINFORCING PLAN
C1245

DESIGNED	D.R.L.		CHECKED	
DRAWN	R.J.N.		APPROVED	

W.O. N° 4 SLARI

SHEET 25 OF 29

LA CHOLLA BLVD., RILLITO RIVER BRIDGE

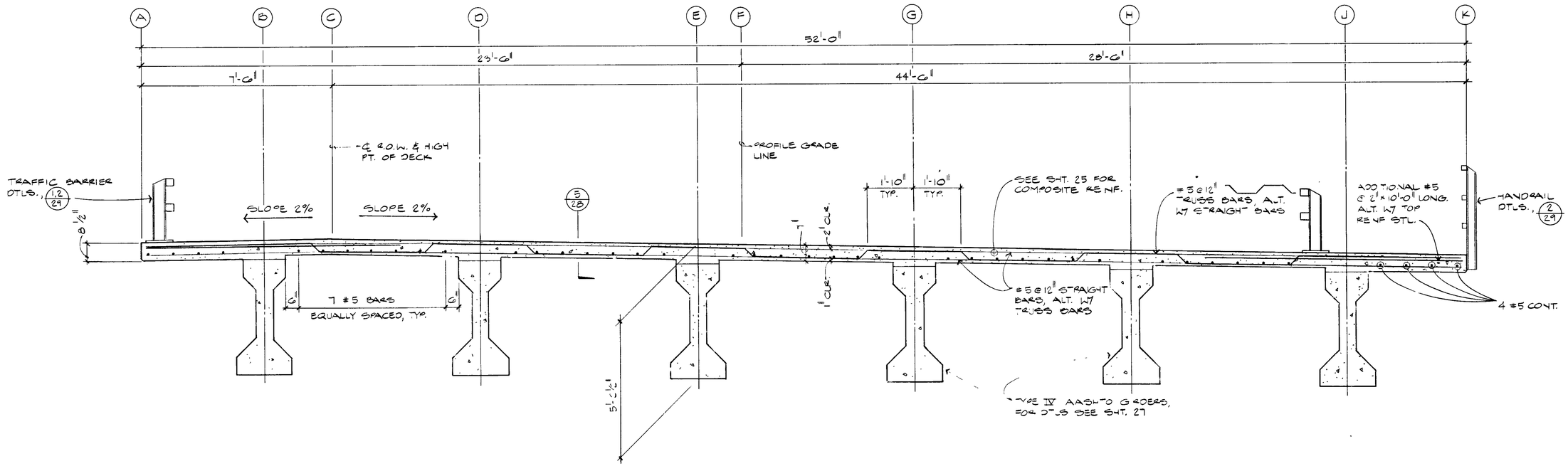

SECTION 1
1/2" = 1'-0"

TABLE OF THEORETICAL DECK ELEVATIONS (+2200.00')

LINE	℄ BRG ABUT. 1	.1 PT.	.2 PT.	.3 PT.	.4 PT.	.5 PT.	.6 PT.	.7 PT.	.8 PT.	.9 PT.	℄ PIER 1
	SPAN 1										
A	65.84	65.88	65.91	65.94	65.97	66.00	66.02	66.04	66.07	66.09	66.10
B	66.04	66.07	66.11	66.14	66.17	66.19	66.22	66.24	66.26	66.28	66.30
C	63.98	66.01	66.05	66.08	66.11	66.13	66.16	66.18	66.21	66.23	66.24
D	65.85	65.88	65.92	65.95	65.98	66.01	66.04	66.06	66.08	66.10	66.12
E	65.66	65.69	65.73	65.76	65.79	65.82	65.85	65.88	65.90	65.92	65.94
F	63.62	65.65	65.69	65.72	65.76	65.78	65.81	65.84	65.86	65.88	65.90
G	65.46	65.50	65.54	65.57	65.61	65.64	65.67	65.69	65.72	65.74	65.76
H	65.27	65.31	65.35	65.38	65.42	65.45	65.48	65.51	65.53	65.56	65.58
J	65.08	65.12	65.16	65.20	65.23	65.26	65.29	65.32	65.35	65.37	65.40
K	64.97	65.01	65.05	65.09	65.12	65.16	65.19	65.22	65.25	65.27	65.29

LINE	.1 PT.	.2 PT.	.3 PT.	.4 PT.	.5 PT.	.6 PT.	.7 PT.	.8 PT.	.9 PT.	℄ PIER 2
	SPAN 2									
A	66.12	66.13	66.14	66.15	66.16	66.16	66.17	66.17	66.17	66.17
B	66.32	66.33	66.34	66.35	66.36	66.37	66.37	66.37	66.37	66.37
C	66.26	66.27	66.29	66.30	66.31	66.31	66.32	66.32	66.32	66.32
D	66.14	66.15	66.17	66.18	66.19	66.19	66.20	66.20	66.20	66.20
E	65.96	65.98	65.99	66.00	66.01	66.02	66.03	66.03	66.03	66.03
F	65.92	65.94	65.95	65.97	65.98	65.98	65.99	66.00	66.00	66.00
G	65.78	65.80	65.81	65.83	65.84	65.85	65.85	65.86	65.86	65.86
H	65.60	65.62	65.63	65.65	65.66	65.67	65.68	65.69	65.69	65.69
J	65.42	65.44	65.45	65.47	65.48	65.50	65.51	65.51	65.52	65.52
K	65.32	65.34	65.35	65.37	65.38	65.40	65.41	65.42	65.42	65.42

LINE	.1 PT.	.2 PT.	.3 PT.	.4 PT.	.5 PT.	.6 PT.	.7 PT.	.8 PT.	.9 PT.	℄ PIER 3
	SPAN 3									
A	66.16	66.16	66.15	66.14	66.13	66.12	66.10	66.08	66.06	66.04
B	66.37	66.37	66.36	66.35	66.34	66.32	66.31	66.29	66.27	66.25
C	66.31	66.30	66.30	66.29	66.27	66.26	66.24	66.22	66.20	66.18
D	66.20	66.19	66.18	66.17	66.16	66.15	66.13	66.12	66.10	66.07
E	66.03	66.03	66.03	66.02	66.01	66.00	65.99	65.97	65.96	65.94
F	66.00	65.99	65.98	65.98	65.97	65.95	65.94	65.92	65.90	65.88
G	65.86	65.85	65.85	65.84	65.82	65.81	65.80	65.78	65.76	65.74
H	65.69	65.69	65.68	65.67	65.66	65.65	65.63	65.62	65.60	65.58
J	65.52	65.52	65.52	65.51	65.51	65.50	65.49	65.47	65.46	65.44
K	65.43	65.43	65.43	65.42	65.41	65.40	65.39	65.38	65.37	65.35

LINE	℄ BRG. ABUT. 2	.1 PT.	.2 PT.	.3 PT.	.4 PT.	.5 PT.	.6 PT.	.7 PT.	.8 PT.	.9 PT.
	SPAN 4									
A	65.77	65.99	65.97	65.94	65.91	65.88	65.84	65.80	65.77	65.73
B	65.98	66.02	66.00	66.18	66.15	66.12	66.09	66.06	66.02	65.94
C	65.94	66.23	66.21	66.18	66.15	66.12	66.09	66.06	66.01	65.90
D	65.83	66.05	66.03	66.00	65.97	65.94	65.91	65.87	65.83	65.80
E	65.69	65.92	65.89	65.87	65.84	65.82	65.79	65.75	65.72	65.69
F	65.65	65.88	65.86	65.84	65.81	65.78	65.76	65.72	65.69	65.65
G	65.62	65.78	65.76	65.74	65.71	65.69	65.66	65.63	65.60	65.57
H	65.50	65.62	65.60	65.58	65.56	65.53	65.51	65.48	65.45	65.42
J	65.35	65.46	65.44	65.42	65.40	65.38	65.35	65.33	65.30	65.27
K	65.12	65.29	65.27	65.24	65.21	65.18	65.15	65.12		

NO.	DATE	REVISION	BY	CK'D	APROV
1	1-18-80	+.11' TO D	RN	OL	

HOLBEN & MARTIN
STRUCTURAL ENGINEERS
TUCSON ARIZONA

PIMA COUNTY DEPT. OF TRANSPORTATION AND FLOOD CONTROL DISTRICT
TUCSON, AZ. C. H. HUCKELBERRY, R.L.S., P.E. DIRECTOR

DECK SECTION & ELEV. TABLE

C1246

W.O. N° 4 BLA21

DESIGNED	D.R.L.	CHECKED	
DRAWN	R.J.N.	APPROVED	

SHEET 26 OF 29

LA CHOLLA BLVD., RILLITO RIVER BRIDGE

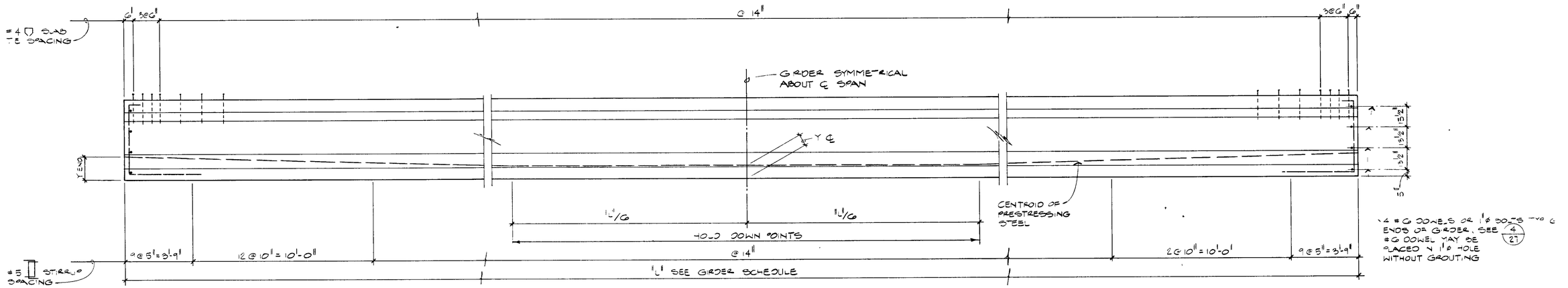

GIRDER ELEVATION
3/8" = 1'-0"

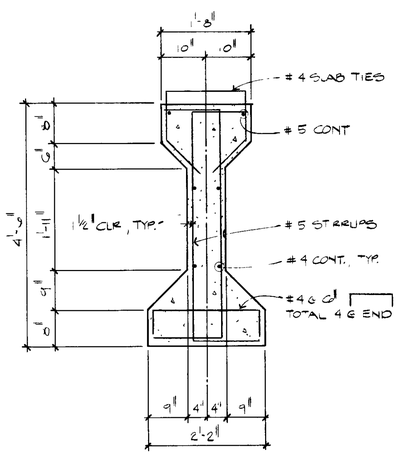

TYPICAL GIRDER REINF. (1)

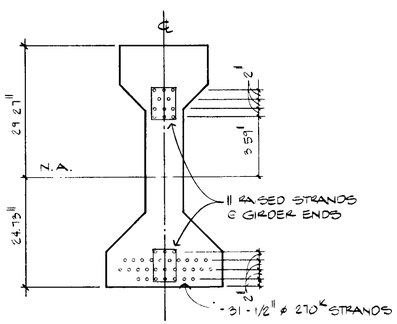

GIRDER @ END SPANS (2)

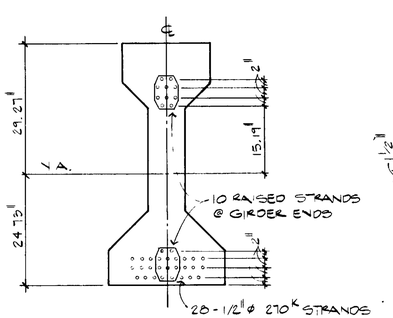

GIRDER @ INTERIOR SPANS (3)

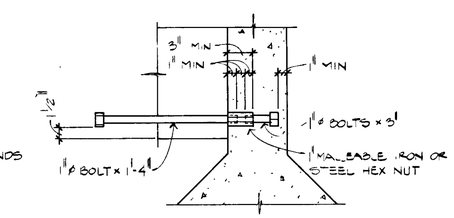

INSERT ASSEMBLY DETAIL (4)

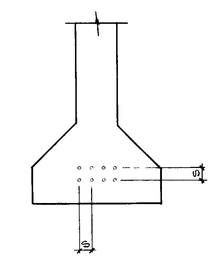

CLEARANCES FOR PRETENSIONED STRANDS (5)

NOTES:

1. THE MINIMUM DISTANCE 'S' BETWEEN INDIVIDUAL STRANDS IS 1½" FOR 3/8" STRANDS, 1¾" FOR 7/16" STRANDS AND 2" FOR 1/2" STRANDS.
2. 'S' IS MEASURED BETWEEN CENTERS OF ADJACENT STRANDS.
3. APPROVAL OF THE ENGINEER IS REQUIRED FOR DEVIATION.

GIRDER SCHEDULE

GIRDER AT GIRDER LINE / SPAN NO.	SEE SHT. No. 24	LENGTH	PW = WORKING FORCE (LBS.)	DEFLECTION @ ℄ DUE TO C.I.P. SLAB	CAMBER @ ℄ SPAN (FT.)	PRESTRESS FORCE LOCAT'N. Y END	PRESTRESS FORCE LOCAT'N. Y ℄	STRAND PATTERN
B1, D1, E1, G1, H1, J1 B4, D4, E4, G4, H4, J4		87'-8"	683,440	.077"↓	.123"↑	17.47"	4.53"	2/27
B2, D2, E2, G2, H2, J2 B3, D3, E3, G3, H3, J3		87'-0"	617,300	.077"↓	.114"↑	17.90"	3.93"	3/27

PRESTRESSED NOTES:

PRESTRESSING:
ALL GIRDERS SHALL BE PRESTRESSED BY THE PRETENSION METHOD ONLY. A MINIMUM OF TWO DEPRESSIONS (AS SHOWN) WITHIN THE GIRDER SHALL BE USED TO POSITION THE TENDONS. THE CENTER OF GRAVITY OF THE PRESTRESSING STEEL SHALL BE AS SHOWN AT THE ENDS AND THE CENTER OF THE GIRDER AND SHALL APPROXIMATE A PARABOLA.
TOPS OF GIRDERS SHALL BE ROUGHENED TO A DEPTH OF 1/4"

PRESTRESS CABLE:
THE PRESTRESS WORKING FORCE (PW) FOR EACH MEMBER IS INDICATED ON THE GIRDER SCHEDULE. THE FORCE REFERS TO STRESS AT SERVICE LOAD AFTER LOSSES IN ACCORDANCE WITH STD. AASHTO SPECS.. THE PROPOSED STRAND ARRANGEMENT HAS BEEN DETERMINED USING 7 WIRE STRAND, GRADE 270, & ASTM A416.

WORKING FORCE:
THE FORCE REMAINING PER GIRDER AFTER ALL LOSSES.
TOTAL ASSUMED LOSSES = 45,000 P.S.I.

CONCRETE STRENGTH:
f'_{ci} = 4000 P.S.I. MIN. ULTIMATE COMPRESSIVE STRENGTH OF CONCRETE AT THE TIME OF INITIAL PRESTRESS.
f'_c = 5500 P.S.I. MIN. ULTIMATE COMPRESSIVE STRENGTH AT 28 DAYS.
n = 6

NO.	DATE	REVISION	BY	CK'D	APROV

PIMA COUNTY DEPT. OF TRANSPORTATION AND FLOOD CONTROL DISTRICT
TUCSON, AZ. C. H. HUCKELBERRY, R.L.S., P.E. DIRECTOR

GIRDER DETAILS

C1247

HOLBEN & MARTIN STRUCTURAL ENGINEERS
TUCSON ARIZONA

W.O. No. 4 SLARI	DESIGNED	D. L	CHECKED	SHEET 27 OF 29
	DRAWN	R.J.N.	APPROVED	

LA CHOLLA BLVD, RILLITO RIVER BRIDGE

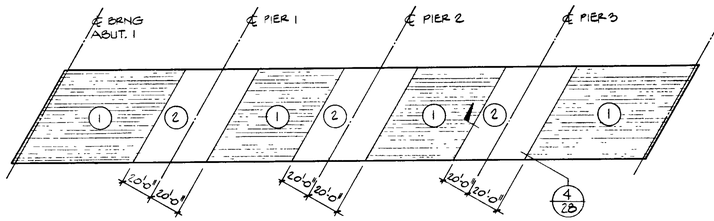

DECK PLACING SEQUENCE PLAN

DECK PLACING NOTES:

1. LONGITUDINAL CONSTRUCTION JOINTS IN SLAB SHALL NOT BE ALLOWED EXCEPT AS APPROVED BY THE ENGINEER.
2. TRANSVERSE CONSTRUCTION JOINTS SHALL BE LOCATED IN ACCORDANCE WITH DECK PLACING SEQUENCE PLAN. DECK POURING SEQUENCE IS SHOWN THUS: (1), ETC.. CONTRACTOR SHALL ALLOW MIN 8 HRS. BETWEEN POURS
3. REINFORCING SHALL BE CONTINUOUS THROUGH CONSTR. JOINT.
4. DIAPHRAGMS SHALL BE PLACED WHEN DECK OVER PIER OR ABUTMENT IS PLACED.

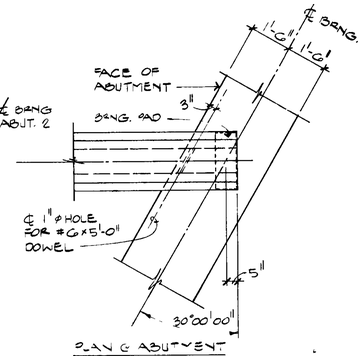

PLAN @ ABUTMENT

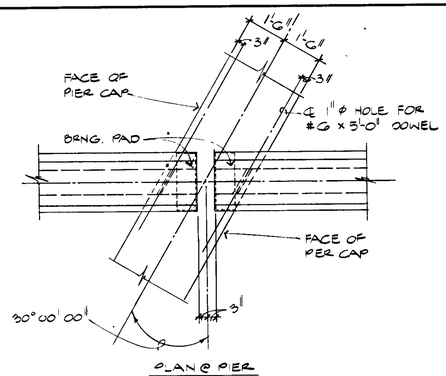

PLAN @ PIER

INTERIOR GIRDERS (1)
3/8" = 1'-0"

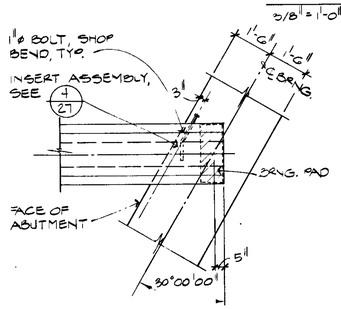

PLAN @ ABUTMENT

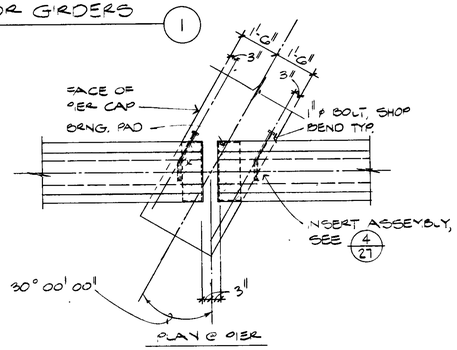

PLAN @ PIER

EXTERIOR GIRDERS (2)
3/8" = 1'-0"

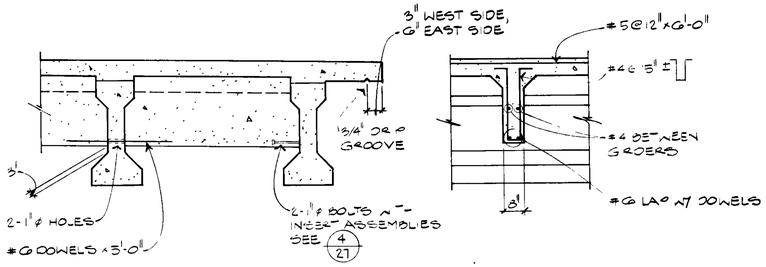

PART SECTION NEAR INTERMEDIATE DIAPHRAGM (3)

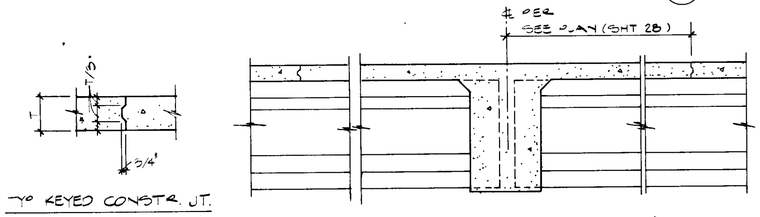

CONTINUOUS SLAB OVER PIER (4)

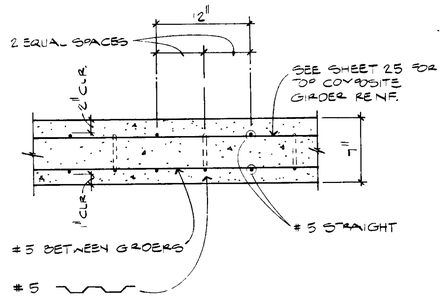

1 1/2" = 1'-0" (5)

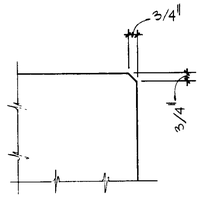

CHAMFER ALL EXPOSED CORNERS THUS, UNLESS OTHERWISE NOTED. THIS NOTE APPLICABLE TO ALL SHEETS PERTAINING TO THE STRUCTURE.

CHAMFER DETAIL (6)
N.T.S.

NO.	DATE	REVISION	BY	CK'D	APROV

HOLBEN & MARTIN STRUCTURAL ENGINEERS
TUCSON ARIZONA

PIMA COUNTY DEPT. OF TRANSPORTATION AND FLOOD CONTROL DISTRICT
TUCSON, AZ. C. H. HUCKELBERRY, R.L.S., P.E. DIRECTOR

DECK DETAILS

C1248

DESIGNED	D.R.L.		CHECKED	
DRAWN	R.J.N.		APPROVED	

W.O. No. 4 BLANK

SHEET 18 OF 29

LA CHOLLA BLVD., RILLITO RIVER BRIDGE

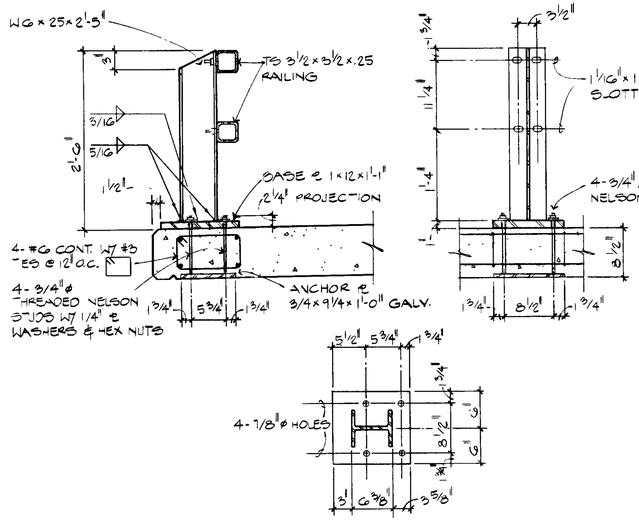

BASE PL

WEST TRAFFIC BARRIER
1" = 1'-0"

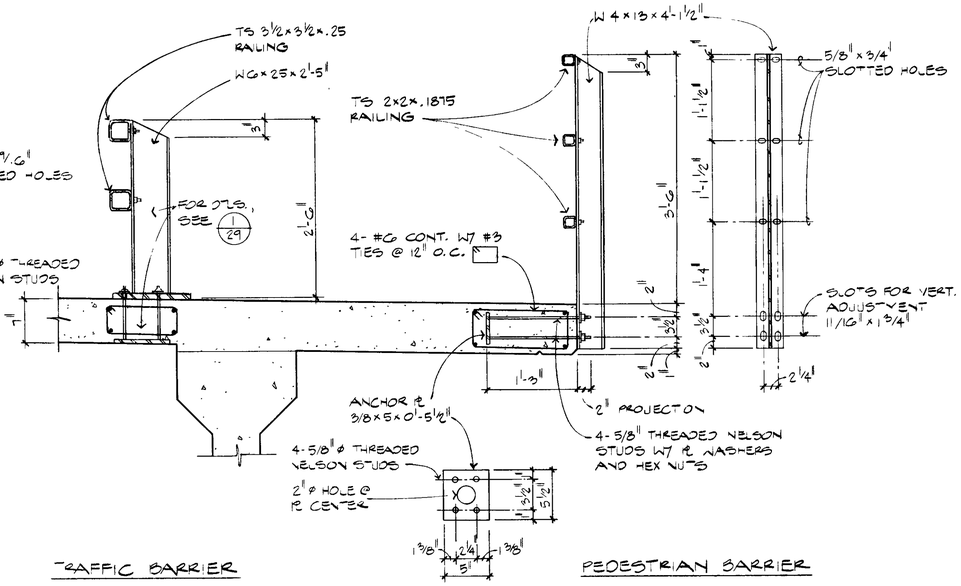

TRAFFIC BARRIER

PEDESTRIAN BARRIER

ANCHOR PL

EAST BARRIERS
1" = 1'-0"

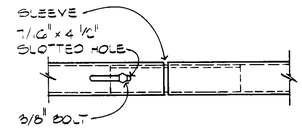

ELEVATION

NOTE: 3/8" NUT MAY BE REPLACED WITH DRILLED AND TAPPED HOLE IN SLEEVE.

SLEEVE FORMED OF 3/16" PL THUS FOR SLIDING FIT INSIDE OF RAIL TUBE. TACK WELD 3/8" NUT INSIDE OF SLEEVE FOR 3/8" HEX HEAD BOLT W7 WASHER AND LOCK WASHER.

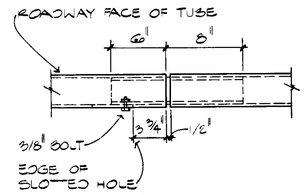

PLAN

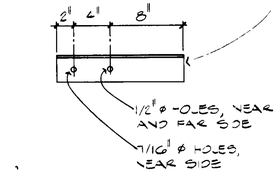

TUBE (RAILING) SPLICE DETAIL
N.T.S.

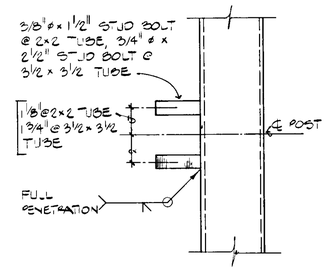

PLAN

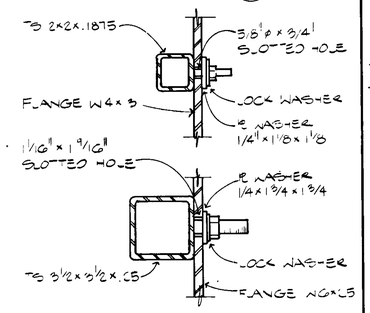

SECTION

RAIL TO POST CONNECTION
3" = 1'-0"

NOTES:

1. POSTS SHALL BE VERTICAL.
2. TUBING SHALL BE PARRALLEL TO DECK ALIGNMENT.
3. TUBING SHALL BE CONT. OVER A MIN. OF 3 PANELS & A MAX. OF 10 PANELS. WHERE SPLICES OCCUR, SPLICE ALL TUBES IN THE PANEL. SEE ALSO 1/21.
4. PAINT RAIL ASSEMBLY AFTER FABRICATION.
5. ANCHOR STUD NUTS SHALL BE TORQUED TO 175 FT. LBS. (NELSON STUDS)
6. STUD BOLT NUTS SHALL BE WRENCH TIGHT.
7. GALV. ANCHOR PLATES IN ACCORDANCE WITH ASTM A123.
8. CHAMFER TOP HORIZ. & VERT. EDGES OF ALL PLATES.

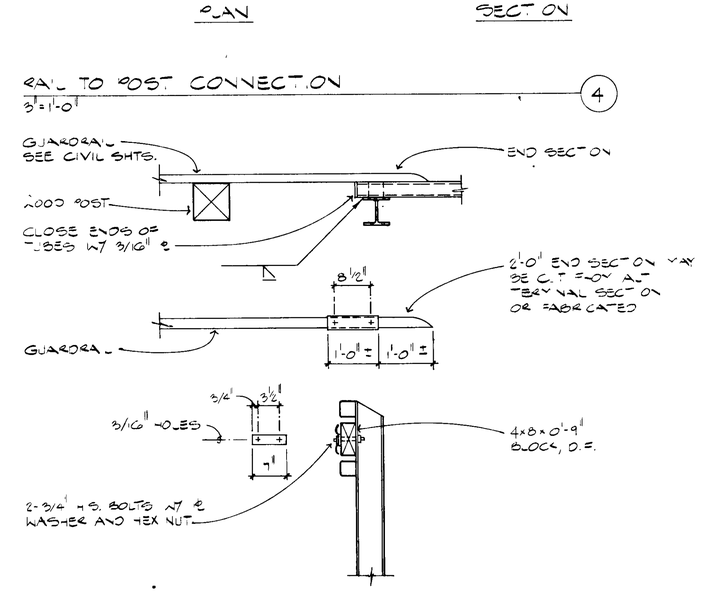

VERT. END POST @ GUARDRAIL CONN.
N.T.S.

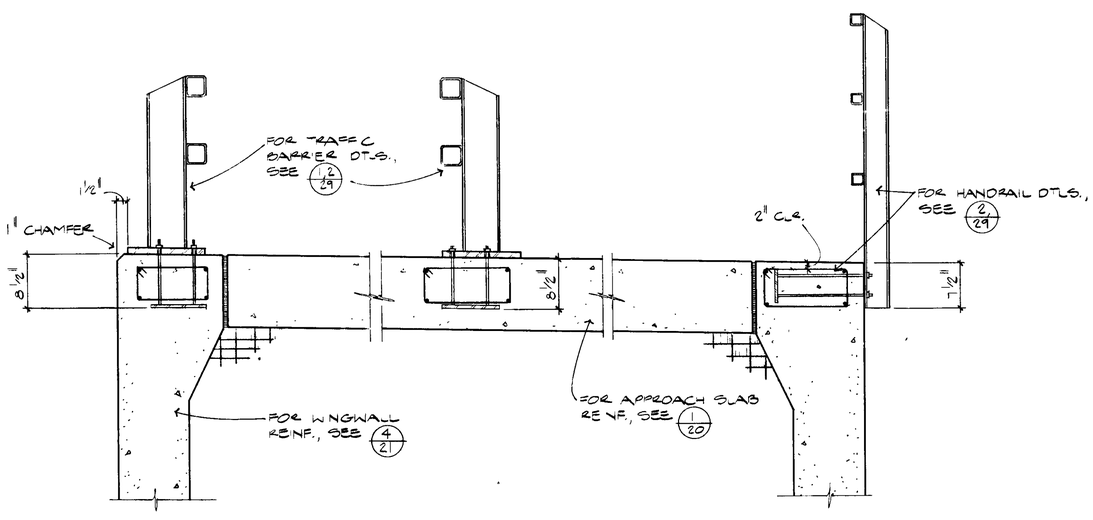

BARRIERS AT APPROACH
1" = 1'-0"

NO.	DATE	REVISION	BY	CK'D	APROV.

PIMA COUNTY DEPT. OF TRANSPORTATION AND FLOOD CONTROL DISTRICT
TUCSON, AZ. C. H. HUCKELBERRY, R.L.S., P.E. DIRECTOR

BARRIER DETAILS

C1249

HOLSEN & MARTIN STRUCTURAL ENGINEERS
TUCSON ARIZONA

W.O. No. 4 SLAR1	DESIGNED	D.R.L.	CHECKED	
	DRAWN	R.J.N.	APPROVED	

SHEET 27 OF 29

LA CHOLLA BLVD.- RILLITO RIVER BRIDGE

PROJECT NO.0132-8 PN.76-81

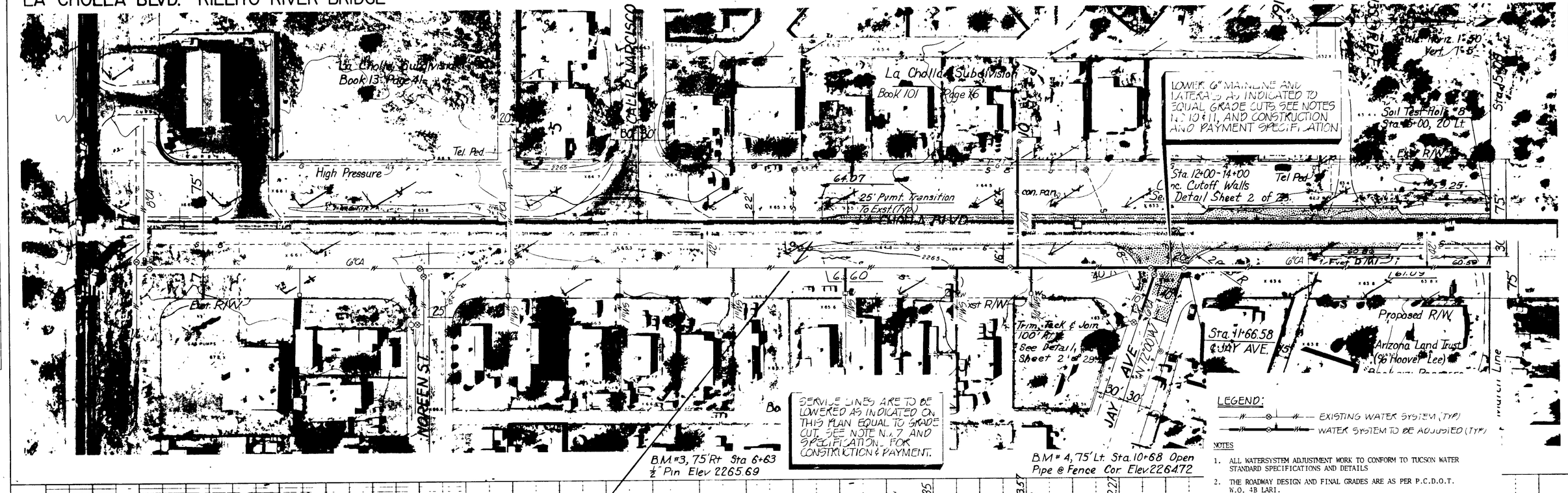

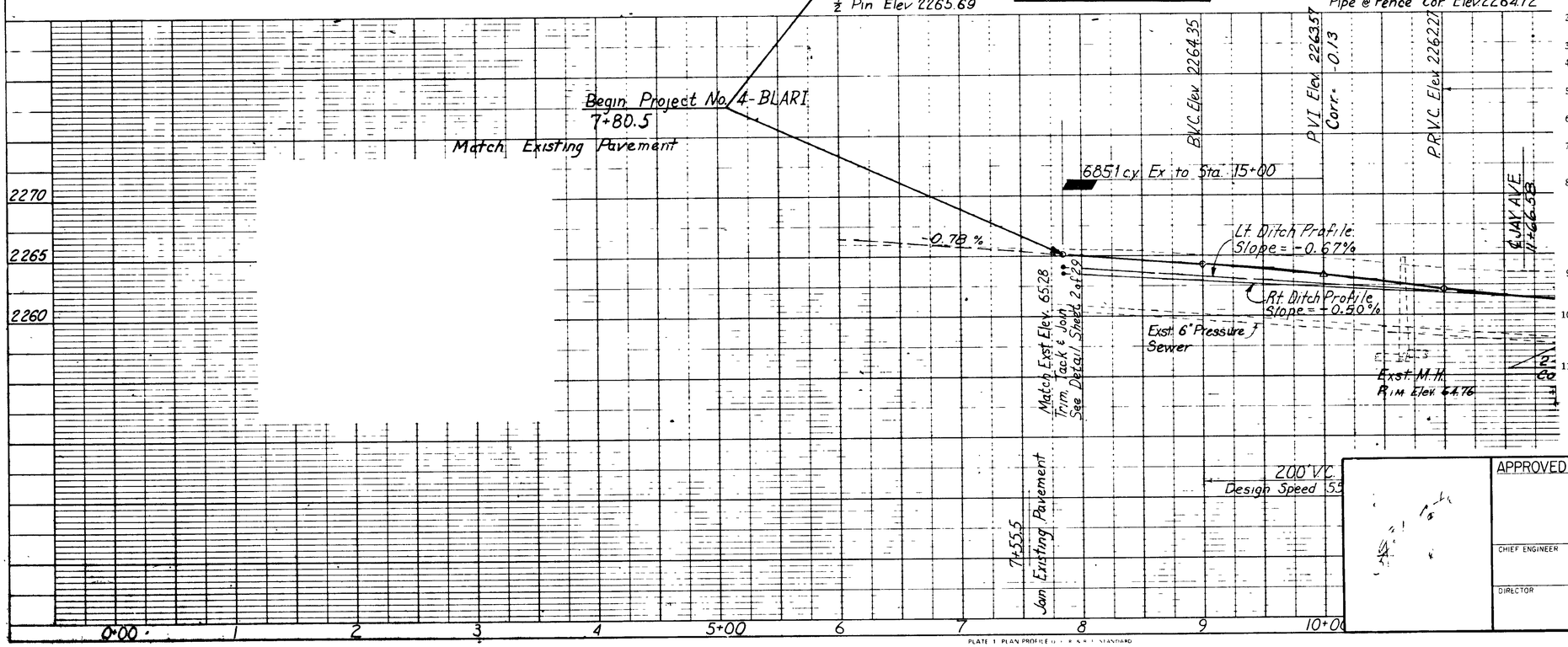

NOTES

1. ALL WATERSYSTEM ADJUSTMENT WORK TO CONFORM TO TUCSON WATER STANDARD SPECIFICATIONS AND DETAILS
2. THE ROADWAY DESIGN AND FINAL GRADES ARE AS PER P.C.D.O.T. W.O. 4B LARI.
3. ALL WATER VALVE BOXES TO BE ADJUSTED AS PER SD-300
4. ANY EXCAVATION, BEDDING & BACKFILL FOR WATERSYSTEM ADJUSTMENTS WILL BE AS PER STANDARD SPECIFICATION NO. 100.
5. WATERSYSTEM TESTING AND DISINFECTION IF REQUIRED WILL BE AS PER STANDARD SPECIFICATIONS NO. 900, 950.
6. WATERLINE SHUT-DOWNS WILL BE COORDINATED WITH TUCSON WATER FIELD ENGINEER'S REPRESENTATIVE. ALSO, CONTACT MR. DON MADSEN AT 791-4132.
7. WATER SERVICE LINES ARE TO BE LOWERED TO EQUAL GRADE CUTS. METERS, BOXES AND CUSTOMER'S PLUMBING REQUIRING ADJUSTMENT WILL BE LOWERED IN PLACE.
8. WATERSYSTEM ADJUSTMENT PRECONSTRUCTION PROCEDURE: THE CONTRACTOR SHALL CONTACT MR. LEON, FIELD ENGINEER, TUCSON WATER 791-4318) (5) FIVE DAYS PRIOR TO ANY WATER WORK. NO ADJUSTMENT WORK IS TO BEGIN UNTIL WRITTEN AUTHORIZATION HAS BEEN ISSUED. ALSO NOTE THAT A SPECIAL PERMIT MUST BE OBTAINED FROM TUCSON WATER COMMERCIAL DEPARTMENT. THERE IS NO CHARGE FOR THE PERMIT, HOWEVER, THERE WILL BE A FEE OF $20(TWENTY DOLLARS) FOR CONSTRUCTION WATER USED IN MAKING ADJUSTMENTS.
9. WATER SERVICE CUSTOMERS AFFECTED BY WATERLINE SHUT-DOWN SHALL BE NOTIFIED (4) FOUR HOURS PRIOR. CONTACT THE MANAGER OF THE 50-50 MOBILE PARK (887-7736).
10. THE WATERMAINS TO BE ADJUSTED BY THIS PLAN TO BE LOWERED TO ADDITIONAL DEPTH EQUAL TO PROPOSED GRADE CUT EXCEPT WHERE WATER SYSTEM IS AT SUFFICIENT EXISTING DEPTH TO ALLOW A MINIMUM OF 30" OF COVER FOLLOWING GRADE CUTS.
11. THE CONTRACTOR MAY ELECT TO INSTALL NEW 6" CEMENT ASBESTOS MAINS IN PARALLEL TRENCH WITH RECONNECTION IN LIEU OF LOWERING EXISTING MAINS. HOWEVER, ALL EXISTING VALVING AND SERVICE CONNECTIONS MUST BE RETAINED.

PROJECT NO. 0132-8

APPROVED:

CHIEF ENGINEER — DATE

DIRECTOR — DATE

CITY OF TUCSON
ALTERATIONS TO THE EXISTING WATERSYSTEM WITHIN
LA CHOLLA BLVD.,
JAY AVE TO RILLITO RIVER

DESIGNED BY	DATE	FIELD BOOK NO	SHEET 1 OF 2
DRAWN BY K.P	DATE 5/29/80	SCALE VERT. HORIZ. 1"=50'	PLAN NO. 76-81
CHECKED BY			

PLATE 1 PLAN PROFILE

SET-2

LA CHOLLA BLVD.- RILLITO RIVER BRIDGE

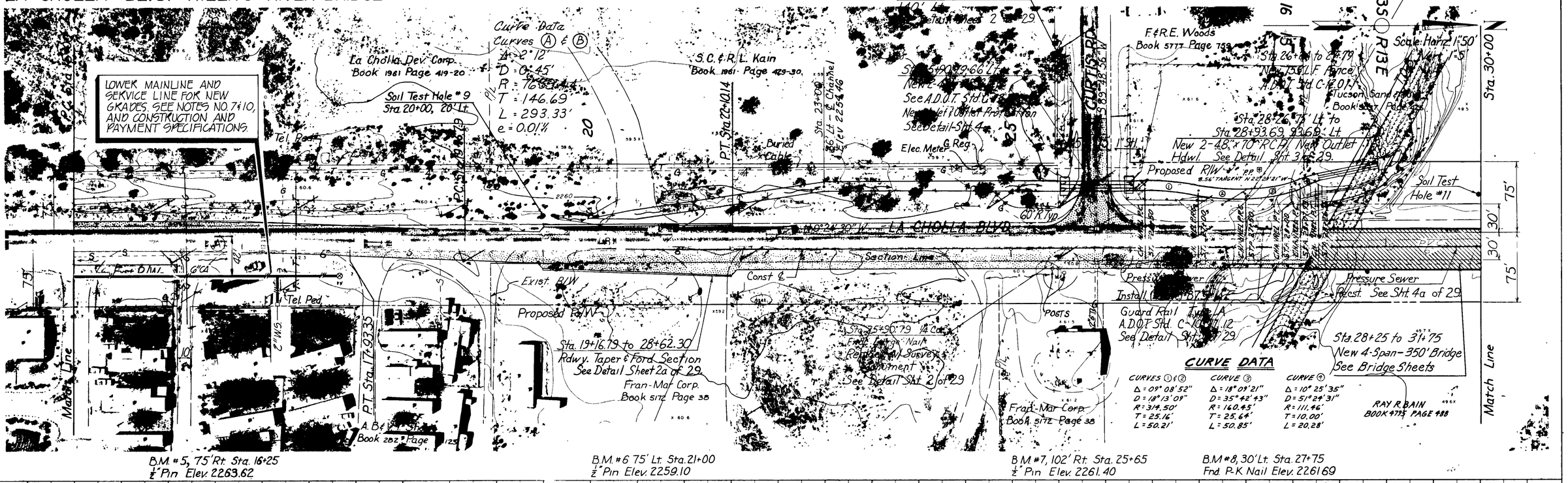

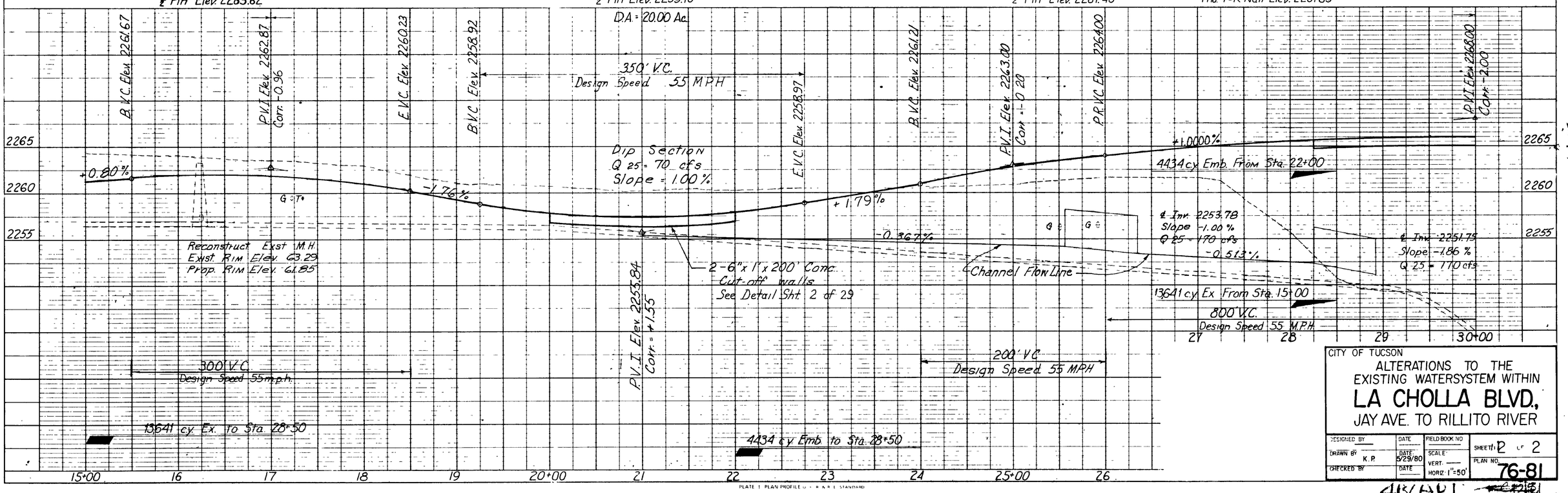

CITY OF TUCSON

ALTERATIONS TO THE EXISTING WATERSYSTEM WITHIN

LA CHOLLA BLVD.,

JAY AVE. TO RILLITO RIVER

DESIGNED BY	DATE	FIELD BOOK NO.	SHEET 2 OF 2
DRAWN BY K.P.	DATE 5/29/80	SCALE: VERT. —	PLAN NO. 76-81
CHECKED BY	DATE	HORIZ. 1"=50'	

PLATE 1 PLAN PROFILE

SET-2