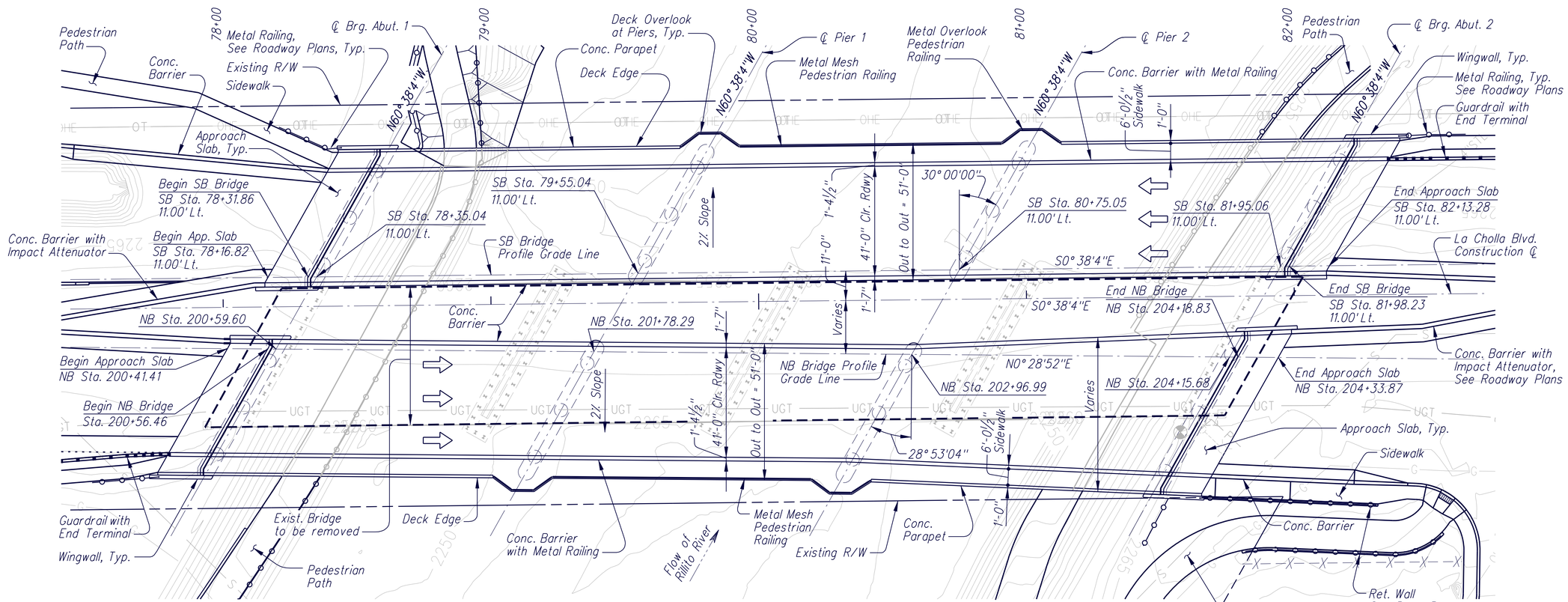

LOCATION PLAN

Scale 1"=20'-0"
Two New Three Span Precast Prestressed AASHTO Type V Modified Girder Bridges
SB Skew = 30°00'00" w/ respect to SB BPGL
NB Skew = 28°53'04" w/ respect to NB BPGL
Contour Interval = 1'-0"

INDEX OF BRIDGE SHEETS

See Sheet S3

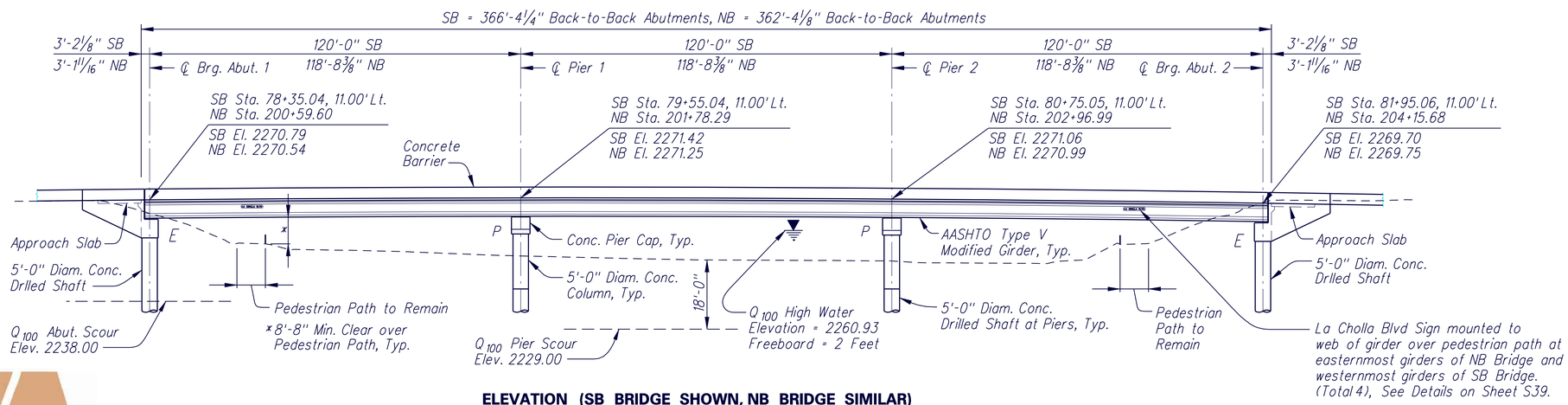

ELEVATION (SB BRIDGE SHOWN, NB BRIDGE SIMILAR)

Scale 1"=20'-0"
Stations are along the La Cholla Boulevard Construction Centerline for the SB Bridge and along the NB Bridge Profile Grade Line for the NB Bridge.
Dimensions and Elevations are along the SB or NB Bridge Profile Grade Line at top of Deck unless noted otherwise.

THE SEAL OF PIMA COUNTY ARIZONA

Regional Transportation Authority