F.H.W.A. REGION	STATE	PROJECT NO.	SHEET NO.	TOTAL SHEETS	AS BUILT
9	ARIZ.	STP-PPM-0(230)A			

0000 PM PPM SS975 01C

VALENCIA ROAD
WADE ROAD TO MARK ROAD

Pima County Project No. 4RTVMW
Federal Project No. STP–PPM–O(230)A
TRACS No. 0000 PM PPM SS975 01C

PIMA COUNTY
TRANSPORTATION

THE SEAL OF PIMA COUNTY ARIZONA

Sharon Bronson, Chair
District 3

Ally Miller
District 1

Raymond J. Carroll
District 4

Ramon Valadez
District 2

Richard Elias
District 5

This Project is Located in Supervisor District #3 & 5

General Project Description

Construct new four-lane roadway, approximately a mile and a half in length, with raised median, sidewalk, drainage culverts, two traffic signals and landscaping. Construct the remaining new roadway, approximately one mile in length, as a five-lane roadway with sidewalk, drainage culverts, a traffic signal and landscaping.

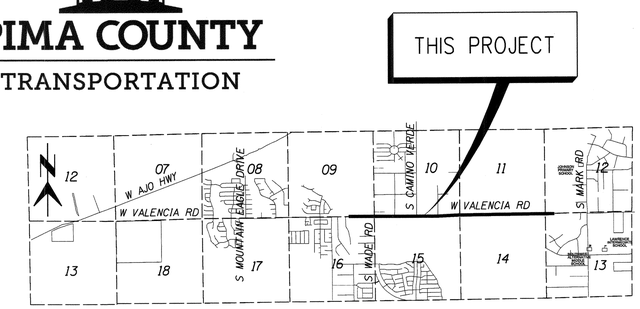

Location Map
N.T.S.
Sections 9, 10, 11, 12, 13, 14, 15, & 16
T-15-S, R-12-E,
G & S R M
Pima County, Arizona

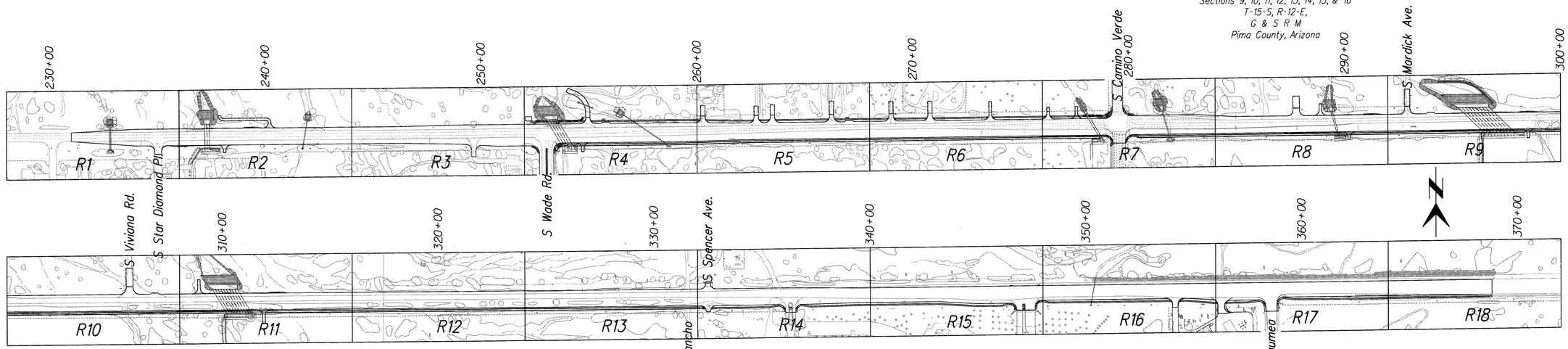

Index to Plan Sheets
N.T.S.

SHEET INDEX

Page No.	Sheet No.	Description
1	C1	Cover Sheet
2 - 4	G1 - G3	Design Sheets
5 - 10	G4 - G9	Roadway Typical Section Sheets
11 - 13	S1 - S3	Summary Sheets
14 - 68	DT1 - DT55	Special Details
69 - 79	M1 - M11	Demolition Plan Sheets
80 - 88	H1 - H9	Geometric Layout Sheets
89 - 106	R1 - R18	Roadway Plan & Profile Sheets
107 - 116	SS1 - SS10	Side Street Plan & Profile Sheets
117 - 130	D1 - D14	Culvert Plan & Profile Sheets
131 - 146	SW1 - SW16	Stormwater Pollution Prevention Plans
147 - 157	IT1 - IT11	ITS Conduit Plan Sheets
158 - 171	W1 - W14	Water Relocation Plans
172 - 184	P1 - P13	Pavement Marking Sheets
185 - 210	SN1 - SN26	Signing Plan Sheets
211 - 220	TS1 - TS10	Traffic Signal Sheets
221 - 240	L1 - L20	Landscaping Sheets
241 - 262	IR1 - IR22	Irrigation Plan Sheets
263 - 281	RW1 - RW19	Right-of-Way Sheets (NIC)
	XS1 - XS75	Cross Sections (NIC)

Arizona Blue Stake
1-800-STAKE-IT
1-800-782-5348
Call Two Working Days Before You Dig

UPC-2013-087

Pima County
Department of Transportation
201 N. Stone Avenue Tucson, Arizona 85701
Priscilla S. Cornelio, P.E., Director

HDR
HDR Engineering, Inc.
5210 East Williams Circle, Suite 530
Tucson, AZ 85711-4459
(520) 584-3600

No.	Revisions	Engineer	Date

No.	As Built	Engineer	Date

REGISTERED PROFESSIONAL ENGINEER (CIVIL) CERTIFICATE NO. 13762 ROBERT DEAN BRITTAIN Date Signed 3-11-14 ARIZONA, U.S.A.
Expires 03-31-2017

Reviewed by	Engineer	Date
Mgr. Design Engr.		3/12/14
Mgr. Traffic Engr.		
Mgr. Field Engr.		3/13/14
Accepted by PCRWRD		

Approved: 3/12 20 14
Priscilla S. Cornelio, P.E.

Project No. 4RTVMW | Sheet No. C1 of C1 | Page No. 1 of 281

TRACS No. SS975 01C

Valencia Rd.: Wade Road to Mark Road No. 4RTVMW

Project ID: 0000000000152226
Client Number: 012145
Pentable: 152226_PL010R0R.TBL
Plotdriver: 152226_V8half_B&W_PDF.plt

ProjectWise Directory: Pima_County_Dept_of_Transportation\PCDOT_Valencia_Mtn_Eagle_Mark\13.00_CAD\Construction Documents\Civil\Wade to Mark\00C-01.dgn
Model: 22x34
Printed By: aledesma Date: 3/11/2014 10:22:45 AM
Print Scale: 1:480

F.H.W.A. REGION	STATE	PROJECT NO.	SHEET NO.	TOTAL SHEETS	AS BUILT
9	ARIZ.	STP-PPM-0(230)A			
		0000 PM PPM SS975 01C			

GENERAL NOTES

1. Construction shall be in conformance with the specifications and details listed in the special provisions.
2. Utility locations shown on plans were compiled based on the best information available to the Department. Utility locations are not intended to be exact or complete. Prior to commencing construction, the Contractor shall verify the location of all utilities with the appropriate organizations. Contact "Blue Stake" at 1-800-782-5348, two full working days prior to beginning construction (Saturdays and Sundays are not considered working days).
3. Right-of-Way Encroachments shall be removed only by order of Pima County, unless otherwise noted.
4. Removal of all Cacti and Native Plants shall be in accordance with the provisions of the "Arizona Native Plant Laws" A.R.S. Chapter 7.
5. Contractor shall adjust all Water Meters, Valve Boxes, Storm Drain Manholes, and Sewer Manholes and Clean Outs to Finish Grade. This work shall be considered incidental to the other items of work, except when the Bidding Schedule contains specific items on a unit basis.
6. Basis of Stationing: Stations for Valencia Road increase from west to east. Stationing is based on the Section Corner at Vahalla Road equal to Station 200+00.00 as originally established by Castro Engineering.
7. Soils information will be made available to prospective bidders in the Geotechnical Report. Soils information so provided shall be for information purposes only, and is not to be considered part of the contract documents. This information was developed as accurately as possible by the methods used. Pima County accepts no responsibility for any conditions encountered which vary from the information provided.
8. The Contractor shall maintain access to all driveways, alleys, and mailboxes during construction. The Contractor will not restrict Emergency Vehicles, U.S. Postal Service, Solid Waste Collections, and/or access to the adjacent properties, except as approved by the Engineer.
9. Omissions or conflicts between various elements of the drawings, notes, and details shall be brought to the attention of the Engineer and resolved before proceeding with the work.
10. All stationing shown on the plans and profiles is along the construction centerline unless otherwise noted.
11. Existing utilities include, but may not be limited to, overhead electric, telephone and television; and underground electric, telephone, television, water, sewer and gas. These lines shall be moved by others unless otherwise noted and shown in these plans.
12. The contractor's attention is called to the limited area available on the site for excavation, embankment and other construction activities.
13. Existing topographic conditions shown on the plan sheets reflect conditions as of January, 2011.
14. Design Speed for Valencia Road is 50 mph.
15. Prior to clearing and grubbing, site shall be treated for buffelgrass and other invasive species. See Special Provision 201-3.01 and 201-3.04.

EARTHWORK NOTES

1. For estimating purposes, these earthwork quantities assume that all on-site materials are not acceptable for use as pipe bedding, pipe shading, structure backfill, and trench backfill.
2. A.C. volume is for information only, as existing A.C. is included in the roadway excavation quantity.

EARTHWORK QUANTITIES

Item No.	Item Description	Total
2030300	Roadway Excavation	7,795 C.Y.
	Shrink (10%)	-780 C.Y.
2030502	Excavation (Overex. & Recomp.)	4,382 C.Y.
	Shrink (10%)	-438 C.Y.
2030401	Drainage Excavation	9,569 C.Y.
	Shrink (10%)	-957 C.Y.
	Pipe Excavation	671 C.Y.
	Shrink (10%)	-67 C.Y.
	Structural Excavation	9,586 C.Y.
	Shrink (10%)	-959 C.Y.
	Riprap Excavation	3,551 C.Y.
	Shrink (10%)	-355 C.Y.
	Available Excavation	**31,998 C.Y.**
	Roadway Embankment	125,971 C.Y.
	Overexcavation Void	4,382 C.Y.
	Ground Compaction	4,671 C.Y.
	Berms & Dikes	642 C.Y.
	Culvert Embankment Void	-3,030 C.Y.
	Net Embankment Demand	**132,636 C.Y.**
2030901	**Borrow (In Place)**	**100,638 C.Y.**
	Structure Backfill	1,316 C.Y.
	Trench Backfill	120 C.Y.
	Shading (Pipes)	279 C.Y.
	Bedding (Pipes)	199 C.Y.
	AC Volume	10,669 C.Y.

LEGEND:

- Trench Backfill (Imported)
- Pipe Shading/Structure Backfill (Imported)
- Pipe Bedding (Imported)
- Pipe/Structural Excavation

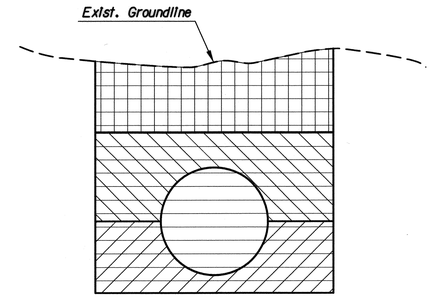

Pipe Excavation & Backfill Limits
(See PC/COT Std. Dtl. 108)

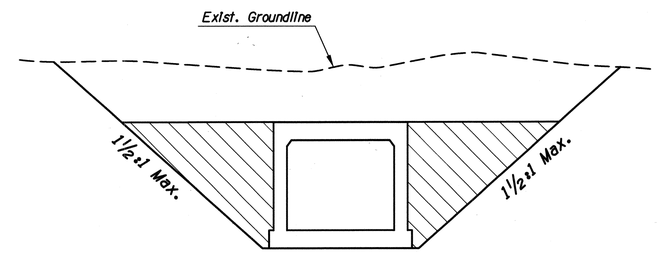

Structure Backfill Limits
(See ADOT Std. B-19.50)

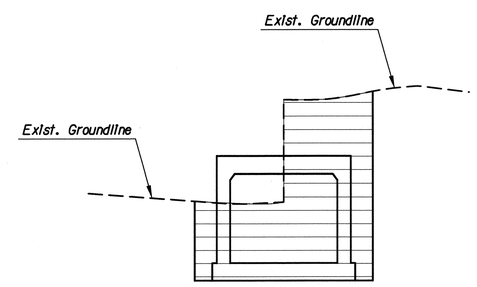

Structural Excavation Limits
(See ADOT Std. B-19.50)

DESIGN SHEET

Scales	Horiz. N/A	Sheet G1 of G9	Page 2 of 281
	Vert. N/A		

Priscilla S. Cornelio, P.E., Director

Pima County Department of Transportation

Designed	EB	03/2014
Drawn	EB, JWF	03/2014
Checked	RDB	03/2014
Proj. Engr.	RDB	03/2014

No.	Revision Description	Engineer	Date

Registered Professional Engineer (Civil) CERTIFICATE NO. 13762 ROBERT DEAN BRITTAIN Date Signed 7-21-14 ARIZONA U.S.A. Expires 3-31-15

HDR Engineering, Inc.
5230 E. Williams Circle, Suite 530
Tucson, AZ 85711-4459
(520) 584-3600

VALENCIA ROAD
WADE ROAD TO MARK ROAD
PROJECT NO. 4RTVMW

TRACS No. SS975 01C

Pentable: 152226_PLOTORDR.TBL
Plotdriver: 152226_V8FULL_B&W_PDF.plt

Project ID: 0000000015226
Client Number: 012145

F.H.W.A. REGION	STATE	PROJECT NO.	SHEET NO.	TOTAL SHEETS	AS BUILT
9	ARIZ.	STP-PPM-0(230)A			
		0000 PM PPM SS975 01C			

See Detail T for Placement Limits of Valencia Road Structural Sections.

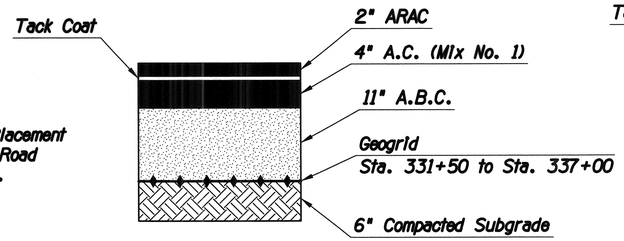

PAVEMENT STRUCTURE NO. 1
Valencia Road N.T.S.

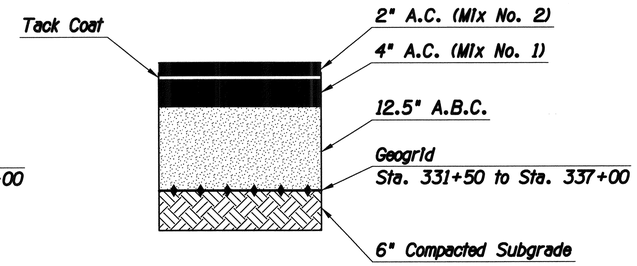

PAVEMENT STRUCTURE NO. 1A
Valencia Road N.T.S.

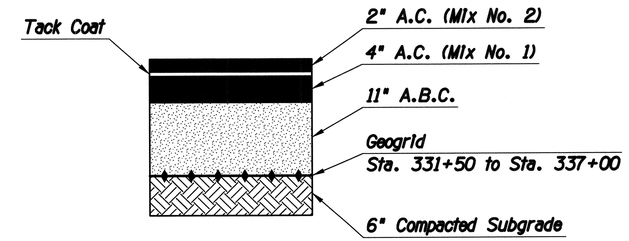

PAVEMENT STRUCTURE NO. 1B
Valencia Road N.T.S.

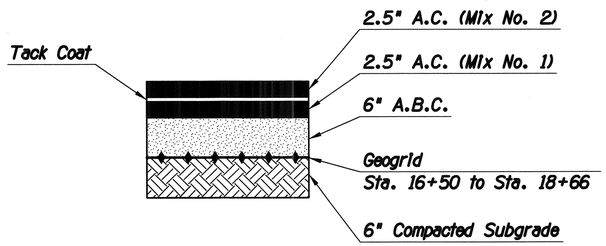

PAVEMENT STRUCTURE NO. 2
Wade Road N.T.S.

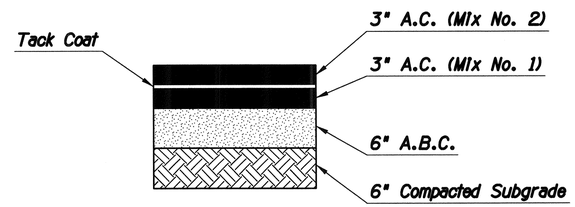

PAVEMENT STRUCTURE NO. 3
Camino Verde N.T.S.

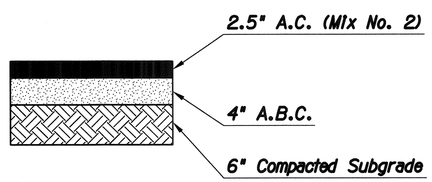

PAVEMENT STRUCTURE NO. 4
Other Local Roads N.T.S.

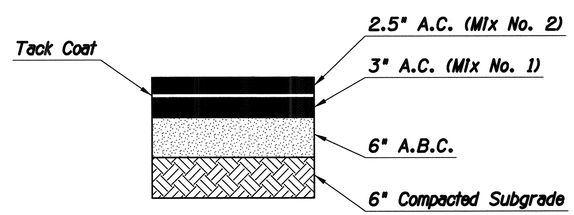

PAVEMENT STRUCTURE NO. 5
Ignacio Baumea N.T.S.

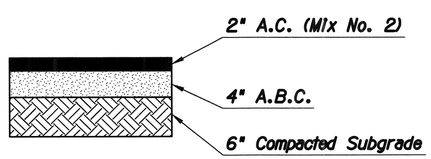

PAVEMENT STRUCTURE NO. 6
Paved Driveways N.T.S.

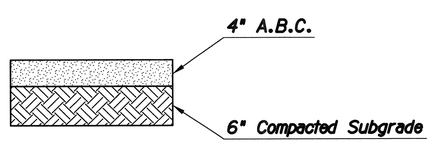

PAVEMENT STRUCTURE NO. 7
Unpaved Driveways N.T.S.

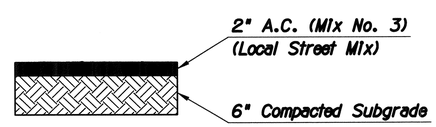

PAVEMENT STRUCTURE NO. 8
Multi-Use Path N.T.S.

ABBREVIATIONS NOT LISTED IN PC/COT STD. DETAIL 101

ACP	Aluminum Capped Pipe
ARAC	Asphalt Rubber Asphaltic Concrete
Cmo.	Camino
Clr.	Clearance
C & G	Curb and Gutter
Dtl.	Detail
EOP	Edge of Pavement
G.B.	Grade Break
ITS	Intelligent Traffic System
MKD	Marked
N/A	Not Applicable
OIP	Open Iron Pipe
P.C.C.	Point of Compound Curve
Qty.	Quantity
RLS	Registered Land Surveyor
S.R.S.P.	Spiral Rib Steel Pipe
Shdr	Shoulder
S.D.	Stopping Sight Distance
TCE	Temporary Construction Easement
Transv.	Transverse
VC	Vertical Curve

LEGEND

1	New Pipe No.
1	New Box No.
PS 1	New Pipe Sleeve No.
01	New Barrier No.
	Pavement Removal

DESIGN SHEET

Scales	Horiz. N/A Vert. N/A	Sheet G2 of G9	Page 3 of 281

Print Scale: 1:40

TRACS No. SS975 01C

Priscilla S. Cornelio, P.E., Director

Designed	JMF	03/2014
Drawn	JMF, BJP	03/2014
Checked	RDB	03/2014
Proj. Engr.	RDB	03/2014

No.	Revision Description	Engineer	Date

Registered Professional Engineer (Civil) CERTIFICATE NO. 13762 ROBERT DEAN BRITTAIN Date Signed 7-21-14 ARIZONA U.S.A. Expires 3-31-15

HDR Engineering, Inc. 5210 East Williams Circle, Suite 530 Tucson, AZ 85711-4489 (520) 584-3600

Pima County Department of Transportation

VALENCIA ROAD
WADE ROAD TO MARK ROAD
PROJECT NO. 4RTVWW

Pentable: 152226_PLOTDRDR.TBL
Plotdriver: 152226_V8FULL_B&W_PDF.plt

Project ID: 0000000015226
Client Number: 012145

ProjectWise Directory: Pima_County_Dept_of_Transportation\PCDOT_Valencia_Mtn_Eagle_Mark\13.00_CAD\Construction Documents\Civil\Wade to Mark\14C-01.dgn
Model: B14C02

Printed By: jefrey Date: 7/21/2014 2:13:44 PM

F.H.W.A. REGION	STATE	PROJECT NO.	SHEET NO.	TOTAL SHEETS	AS BUILT
9	ARIZ.	STP-PPM-0(230)A			
		0000 PM PPM SS975 01C			

LENGTH OF PROJECT

Sta. 231+00.00 to Sta. 368+80.00 = 13,780.00'
= 2.61 Miles

SURVEY CONTROL

HORIZONTAL CONTROL:
The horizontal control for this project is based on existing survey control points as provided by Pima County Survey and NGS. Pima County Geodetic Control Point "HJ04" and NGS Point "NN 100".

The grid coordinates used for "HJ04" are as follows:
NAD 83(HARN92) NORTHING (Y) = 413,459.642
NAD 83(HARN92) EASTING (X) = 967,556.895

The grid coordinates used for "NN 100" are as follows:
NAD 83(HARN92) NORTHING (Y) = 407,453.7090
NAD 83(HARN92) EASTING (X) = 916,548.7450

The Published Combined Factor for "HJ04" = 0.9998575910

Surface Coordinates are derived by dividing the grid coordinates by 0.9998575910

VERTICAL CONTROL:
The vertical control for this project is based on Pima County benchmark designation MBP 78.

Based on NAVD 88 DATUM having an elevation of 2505.59 feet.

Station Mark is 2" BRASS DISK stamped PCHD 10/11/15/14.

Located 14 Feet South of the centerline of Valencia Road near Vivianna Road.

DESIGN DATA

	2010 ADT	2030 ADT
Valencia Road		
-Wade Road to Camino Verde	14,800	28,400
-Camino Verde to Viviana Road	12,400	26,100
-Viviana Road to Mark Road	17,300	36,400

DESIGN VEHICLE:	Left & Right Turns	U-Turns
Major Intersection:	WB-50	Passenger Car
Minor Intersection:	Bus	Passenger Car
Driveway:	Passenger Car	N/A

SANITARY SEWER NOTES

1. ALL DESIGN STANDARDS, MATERIALS AND WORKMANSHIP FOR PUBLIC SANITARY SEWERS SHALL BE IN ACCORDANCE WITH THE PIMA COUNTY REGIONAL WASTEWATER RECLAMATION DEPARTMENT (PCRWRD) ENGINEERING DESIGN STANDARDS 2012 (EDS 2012) AND THE STANDARD SPECIFICATIONS AND DETAILS FOR CONSTRUCTION 2012 (SSDC 2012). SAID DOCUMENTS ARE AVAILABLE THROUGH THE PCRWRD WEBSITE (www.pima.gov/wwm/eng/des std.htm).

2. THE CONTRACTOR SHALL CALL "BLUE STAKE" (1-800-782-5348) A MINIMUM OF TWO (2) BUSINESS DAYS PRIOR TO COMMENCING CONSTRUCTION ACTIVITIES. THE CONTRACTOR SHALL KEEP ALL "BLUE STAKE" REQUESTS UP-TO-DATE AND COMPLY WITH APPLICABLE ARIZONA REVISED STATUTES (A.R.S.), TITLE 40, CHAPTER 1, ARTICLE 6.3, SECTION 40-360.22 PERTAINING TO "BLUE STAKE". ERRORS IN "BLUE STAKE" SHALL BE IMMEDIATELY REPORTED TO THE ENGINEER.

3. THE CONTRACTOR SHALL FIELD VERIFY EXISTING SEWER ELEVATIONS AND ALIGNMENTS PRIOR TO CONSTRUCTION AND IMPLEMENTATION, VERIFICATION MAY REQUIRE POT-HOLING.

4. IMMEDIATELY REPORT ANY OF THE FOLLOWING TO EITHER PCRWRD FIELD ENGINEERING (520-740-2651) OR PCRWRD CONVEYANCE DIVISION (520-724-3500): ANY RELEASE OF SEWAGE, ANY DAMAGE TO THE PUBLIC SANITARY SEWAGE SYSTEM, OR THE DROPPING OF DEBRIS INTO THE PUBLIC SANITARY SEWAGE SYSTEM. ON WEEKENDS, HOLIDAYS, OR BETWEEN 5:00 P.M. AND 7:00 A.M., IMMEDIATELY CALL PCRWRD CENTRAL CONTROL ROOM AT (520-443-6048) AND REQUEST A PCRWRD REPRESENTATIVE TO BE DISPATCHED TO THE SITE. TAKE IMMEDIATE ACTION TO CONTAIN THE SANITARY SEWAGE OVERFLOW (SSO) FROM THE SEWER SYSTEM. THE CONTRACTOR SHALL BE RESPONSIBLE FOR ALL COSTS TO REPAIR THE SYSTEM, FOR ALL EXPENSES TO MITIGATE THE RELEASE AND TO DISINFECT THE RELEASE AREAS AND FOR ANY REGULATORY PENALTIES LEVIED ON PCRWRD BECAUSE THE SSO ENTERED A NATURAL DRAINAGEWAY OR STORM WATER DRAINAGE SYSTEM. THE CONTRACTOR SHALL REPAIR ALL DAMAGE AS DIRECTED AND APPROVED BY PCRWRD.

5. HOUSE OR BUSINESS CONNECTION SEWERS (HCS OR BCS) ARE NOT PART OF THE PUBLIC SANITARY SEWER CONVEYANCE SYSTEM. PRIVATE CONNECTION SEWERS CONSTRUCTED PRIOR TO JANUARY 2006 ARE NOT REQUIRED TO BE BLUE STAKED. ANY HCS/BCS ENCOUNTERED DURING CONSTRUCTION SHALL BE PROTECTED, REPAIRED, OR REROUTED, AS THE SITUATION DICTATES PER PCRWRD SSDC 2012, DETAIL RWRD 400 AND AT NO EXPENSE TO THE PROPERTY OWNER OR PCRWRD.

6. SEWER CONSTRUCTION SHALL NOT COMMENCE UNTIL: (A) CONTRACTOR HAS OBTAINED A PUBLIC SEWER CONSTRUCTION PERMIT FROM PCRWRD (520-724-6369) AND (B) A PRE-CONSTRUCTION MEETING WITH THE ASSIGNED PIMA COUNTY PROJECT INSPECTOR IS SCHEDULED, AT LEAST THREE (3) FULL WORKING DAYS PRIOR TO THE START OF SEWER CONSTRUCTION.

7. IT IS THE CONTRACTOR'S RESPONSIBILITY TO ADJUST OR RECONSTRUCT ALL SANITARY SEWER MANHOLES TO FINISHED GRADE. ALL FRAME AND COVER ADJUSTMENTS ARE TO BE IN ACCORDANCE WITH PCRWRD SSDC 2012, DETAIL RWRD 211, 212, 304, OR RWRD 305 (AS APPLICABLE) AND DETAIL RWRD 306. WHILE ADJUSTING THE MANHOLE TO FINISHED GRADE, IT IS THE CONTRACTOR'S RESPONSIBILITY TO ENSURE THAT FRAME AND COVER ARE CLEANED OF ANY AND ALL ATTACHED MATERIALS (ASPHALT, CONCRETE, ETC.) AND THAT ANY VENT HOLES ARE OPEN AND CLEAR OF OBSTRUCTIONS. IF THE FRAME AND COVER ARE DAMAGED OR CANNOT BE COMPLETELY CLEANED A NEW FRAME AND COVER ARE TO BE PUT INTO PLACE. COSTS ASSOCIATED WITH THESE ACTIONS ARE THE RESPONSIBILITY OF THE CONTRACTOR. REFER TO PCRWRD SSDC 2012, DETAIL RWRD 213-218 FOR FRAME AND COVER REQUIREMENTS.

8. CONTRACTOR SHALL MAINTAIN ACCESS TO ALL SANITARY SEWER MANHOLE STRUCTURES AT ALL TIMES.

9. ALL LANDSCAPING LOCATED WITHIN TEN (10) FEET HORIZONTALLY OF THE PUBLIC SANITARY SEWER AND MANHOLES AND/OR WITHIN THE PUBLIC SEWER EASEMENTS SHOWN HEREON SHALL BE IN ACCORDANCE WITH THE PLANTING GUIDELINES CONTAINED WITHIN PCRWRD EDS 2012, SECTION 7.7.

10. ALL STORM WATER POLLUTION PREVENTION PLAN (SWPPP) MEASURES SHALL BE INSTALLED SO AS TO PREVENT ALL STORM WATER, CONSTRUCTION WATER, FUELS, CHEMICALS, OR LIQUIDS TO BE DIRECTED INTO OR ONTO ANY SANITARY SEWER FACILITIES. PROTECTION OF SANITARY SEWER FACILITIES SHALL BE A PART OF THE APPROVED CONSTRUCTION SWPPP AND BEST MANAGEMENT PRACTICES. PROTECTION DEVICES SHALL BE INSTALLED AND MAINTAINED AROUND ALL POTENTIALLY AFFECTED SANITARY SEWER FACILITIES WITHIN THE PROJECT LIMITS. ADDITIONAL MEASURES SHALL INCLUDE BUT NOT BE LIMITED TO THE USE OF RAIN STOPPERS AND MANHOLE COVERS AS DEEMED NECESSARY BY PCRWRD.

11. MANHOLE FRAMES AND COVERS TO BE RESET WHICH ARE LOST OR DAMAGED DUE TO THE CONTRACTOR'S OPERATIONS TO THE EXTENT THAT THEY ARE UNACCEPTABLE FOR REUSE SHALL BE REPLACED AT NO ADDITIONAL COST TO THE AGENCY.

Sewer Item	Paving Sheet #	Conc. Collar	Bid Item #	Payment	New (3) Frame & Cover
M.H.# 4075-14	R1	(2)	5090110	1 EACH	
M.H.# 5471-07	R2	(1)	5090100	4 L.F.	X
M.H.# 6461-01	R2	(1)	5090100	6.5 L.F.	
M.H.# 6461-02	R2	(1)	5090202	1 EACH	
M.H.# 5471-08	R2	(1)	5090100	5.5 L.F.	X
M.H.# 5471-09	R3	(1)	5090100	6.5 L.F.	X
M.H.# 5471-10	R3	(1)	5090100	7 L.F.	
M.H.# 5471-11	R4	(2)	5090100	5.5 L.F.	
M.H.# 5471-12	R4	(1)	5090100	5.5 L.F.	
M.H.# 5471-13	R5	(2)	5090100	5.5 L.F.	
M.H.# 5471-14	R5	(2)	5090100	6 L.F.	
M.H.# 5471-15	R6	(2)	5090100	6 L.F.	
M.H.# 5471-16	R7	(2)	5090100	6 L.F.	
M.H.# 5471-17	R7	(2)	5090100	5.5 L.F.	
M.H.# 5471-18	R8	(2)	5090100	7 L.F.	
M.H.# 5471-19	R8	(2)	5090100	6.5 L.F.	
M.H.# 5471-20	R9	(2)	5090100	7 L.F.	
M.H.# 5471-21	R10	(2)	5090100	10 L.F.	
M.H.# 5471-22	R10	(1)	5090100	9.5 L.F.	
M.H.# 5471-23	R10	(1)	5090100	8 L.F.	

(1) Place Concrete Collar per PCRWRD SSDC 2012, Std. Dtl. RWRD-212. Bid Item No. 5090020.

(2) Place Concrete Collar per PCRWRD SSDC 2012, Std. Dtl. RWRD-211. Bid Item No. 5090020.

(3) New Frame & Cover will be paid for under Bid Item No. 5090201.

The existing and proposed manhole rim elevations are shown on the roadway plans.

DESIGN SHEET

No.	Revision Description	Engineer	Date

		Date
Designed	JMF	03/2014
Drawn	JMF	03/2014
Checked	RDB	03/2014
Proj. Engr.	RDB	03/2014

Priscilla S. Cornelio, P.E., Director

Registered Professional Engineer (Civil) CERTIFICATE NO. 13762 ROBERT DEAN BRITTAIN Date Signed 7-21-14 ARIZONA U.S.A.
Expires 3-31-17

HDR Engineering, Inc.
5210 E. Williams Circle, Suite 530
Tucson, AZ 85711-4459
(520) 584-3600

Pima County Department of Transportation

VALENCIA ROAD
WADE ROAD TO MARK ROAD
PROJECT NO. 4RTVWW

Scales	Horiz. N/A Vert. N/A	Sheet G3 of G9	Page 4 of 281

TRACS No. SS975 01C

F.H.W.A. REGION	STATE	PROJECT NO.	SHEET NO.	TOTAL SHEETS	AS BUILT
9	ARIZ.	STP-PPM-0(230)A			
		0000 PM PPM SS975 01C			

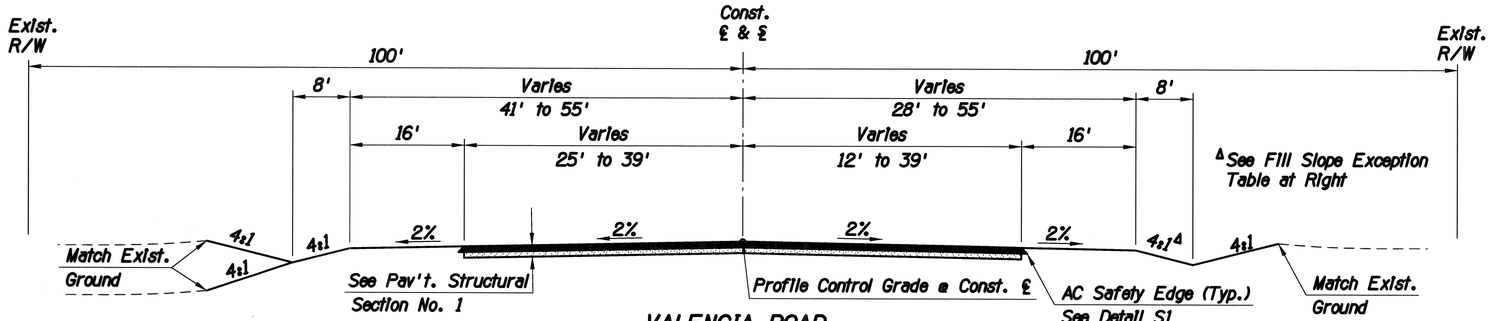

VALENCIA ROAD
Sta. 231+00.00 to Sta. 234+00.00

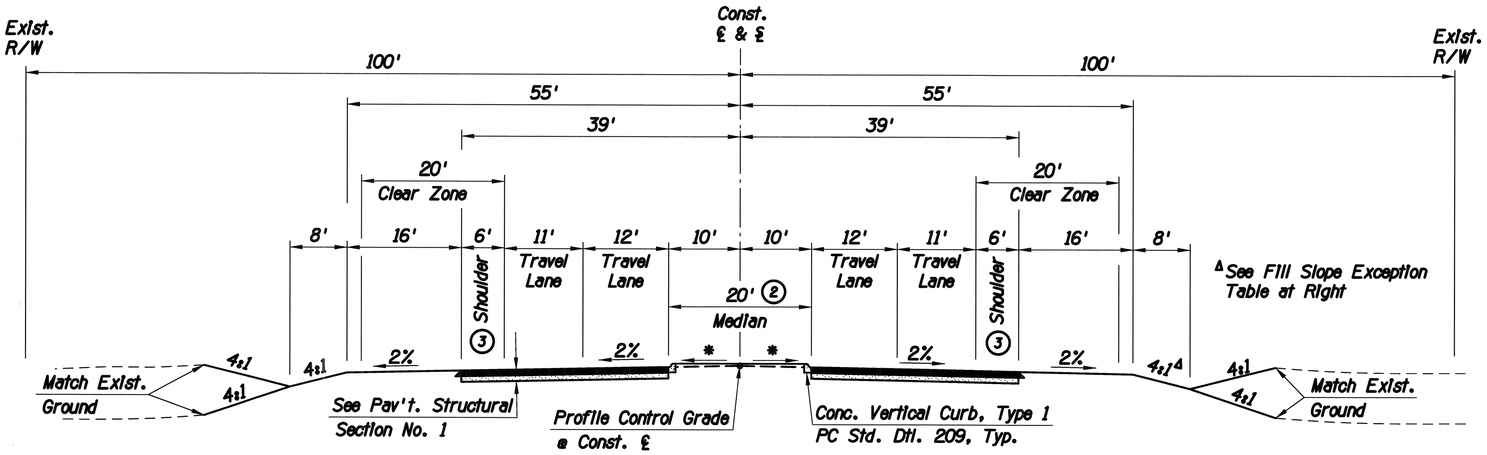

VALENCIA ROAD
Sta. 234+00.00 to Sta. 246+23.03

* See Finish Grade Detail This Sheet

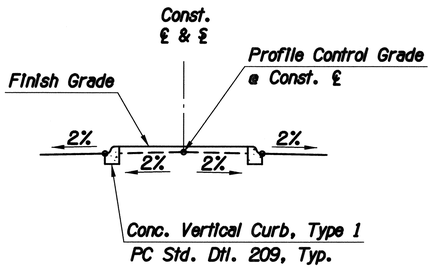

VALENCIA ROAD
Finish Grade Detail

ΔFILL SLOPE EXCEPTION TABLE		
Station	Side	Slope Control
231+00 to 232+80	Right	4:1 slope to match existing ground. There will be no cut ditch in this station range.
235+20 to 237+70	Right	4:1 slope to match existing ground. There will be no cut ditch in this station range.

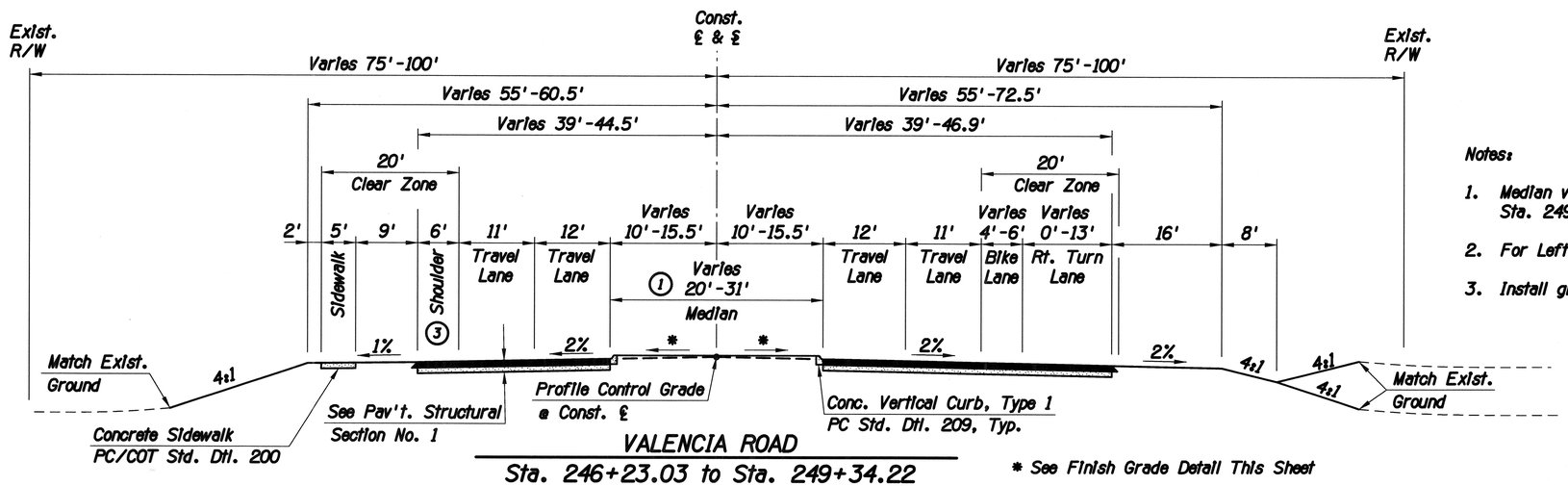

VALENCIA ROAD
Sta. 246+23.03 to Sta. 249+34.22

* See Finish Grade Detail This Sheet

Notes:

1. Median varies 20' to 31' between Sta. 246+23 to Sta. 249+34.
2. For Left Turn Bay Details See Special Detail G.
3. Install ground-in rumble strips per Detail I.

TYPICAL SECTIONS

Priscilla S. Cornelio, P.E., Director

No.	Revision Description	Engineer	Date

		Date
Designed	EB	03/2014
Drawn	EB,JMF	03/2014
Checked	RDB	03/2014
Proj. Engr.	RDB	03/2014

Registered Professional Engineer (Civil) CERTIFICATE NO. 13762 ROBERT DEAN BRITTAIN Date Signed ARIZONA U.S.A.

HDR Engineering, Inc. 5210 East Williams Circle, Suite 530 Tucson, AZ 85711-4459 (520) 584-3600

Pima County Department of Transportation

VALENCIA ROAD
WADE ROAD TO MARK ROAD
PROJECT NO. 4RTVMW

Scales	Horiz. 1"=NA Vert. 1"=NA	Sheet G4 of G9	Page 5 of 281

Project ID: 0000000000152226 Client Number: 012145
Pentable: 152226_PLOTORDR.TBL Plotdriver: 152226_V8FULL_B&W_PDF.plt

ProjectWise Directory: Pima_County_Dept_of_Transportation\PCDOT_Valencia_Mtn_Eagle_Mark\13.00_CAD\Construction Documents\Civil\Wade to Mark\15C-01.dgn Model: 15C-01 Printed By: jefrey Date: 7/21/2014 2:13:53 PM Print Scale: 1:40

TRACS No. SS975 01C

F.H.W.A. REGION	STATE	PROJECT NO.	SHEET NO.	TOTAL SHEETS	AS BUILT
9	ARIZ.	STP-PPM-0(230)A			
		0000 PM PPM SS975 01C			

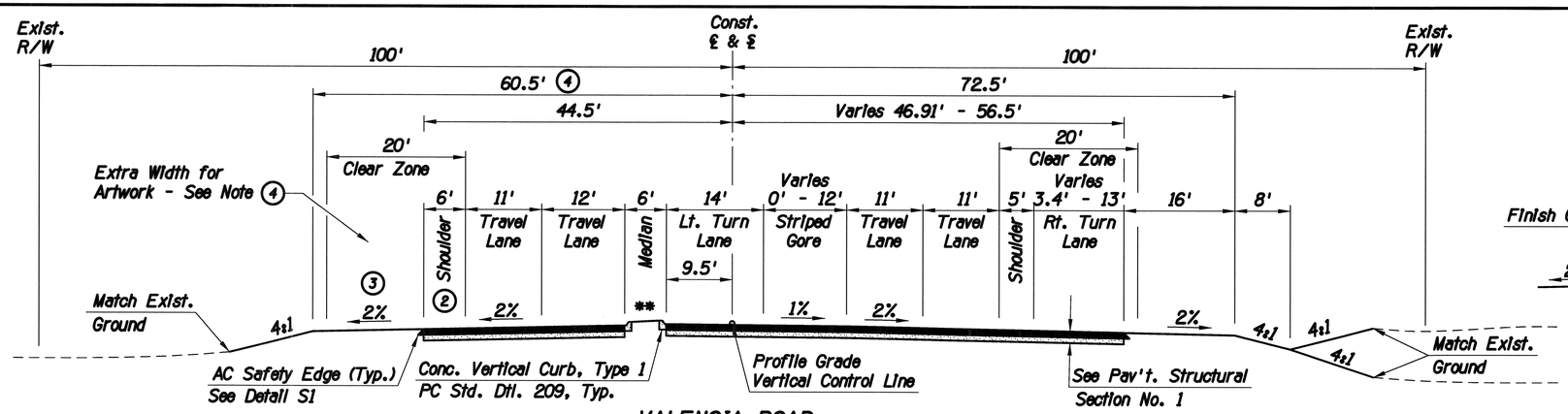

** See Details G & P

VALENCIA ROAD
Sta. 249+34.22 to Sta. 252+98.18

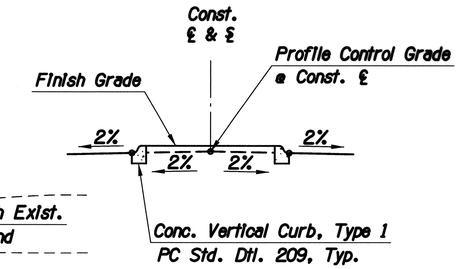

VALENCIA ROAD
Finish Grade Detail

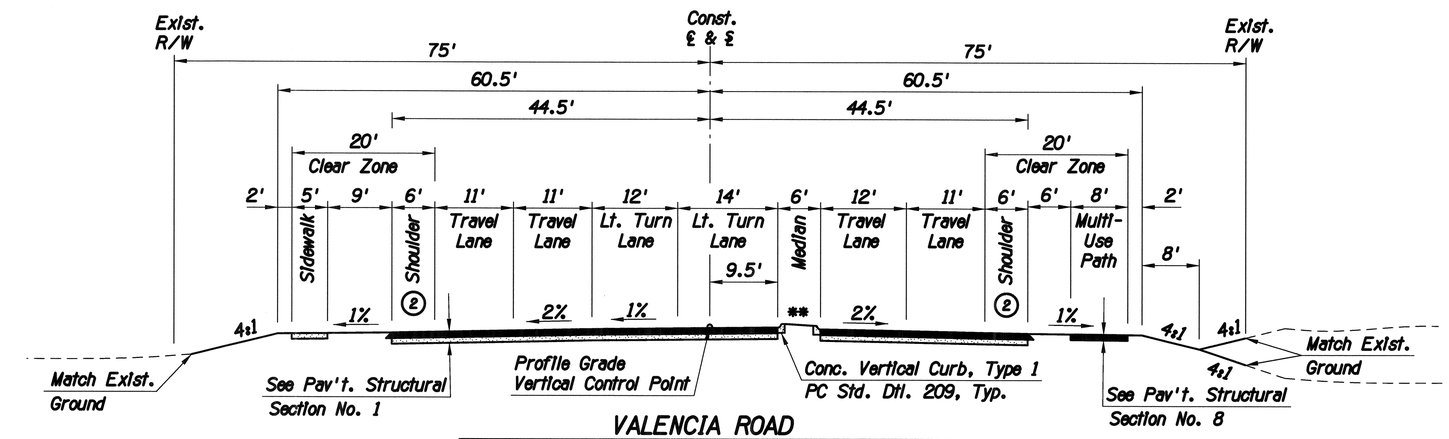

VALENCIA ROAD
Sta. 252+98.18 to Sta. 259+39.06

** See Details G & P

Δ FILL SLOPE EXCEPTION TABLE		
Station	Side	Slope Control
260+50 to 261+30	Left	Varies between 4:1 to 3.2:1 within this segment. Toe of slope to match existing ground at right-of-way.

Notes:

1. Median varies 31' to 20' between Sta. 259+39 to Sta. 262+14.
2. Install ground-in rumble strips per Detail 1.
3. Sidewalk is on north side from Sta. 252+30 to Sta. 278+97.
4. Varies from 60.5' to 80.5' from Sta. 251+85 to Sta. 252+05. 80.5' from Sta. 252+05 to Sta. 252+35. Varies from 80.5' to 60.5' from Sta. 252+35 to Sta. 252+55.

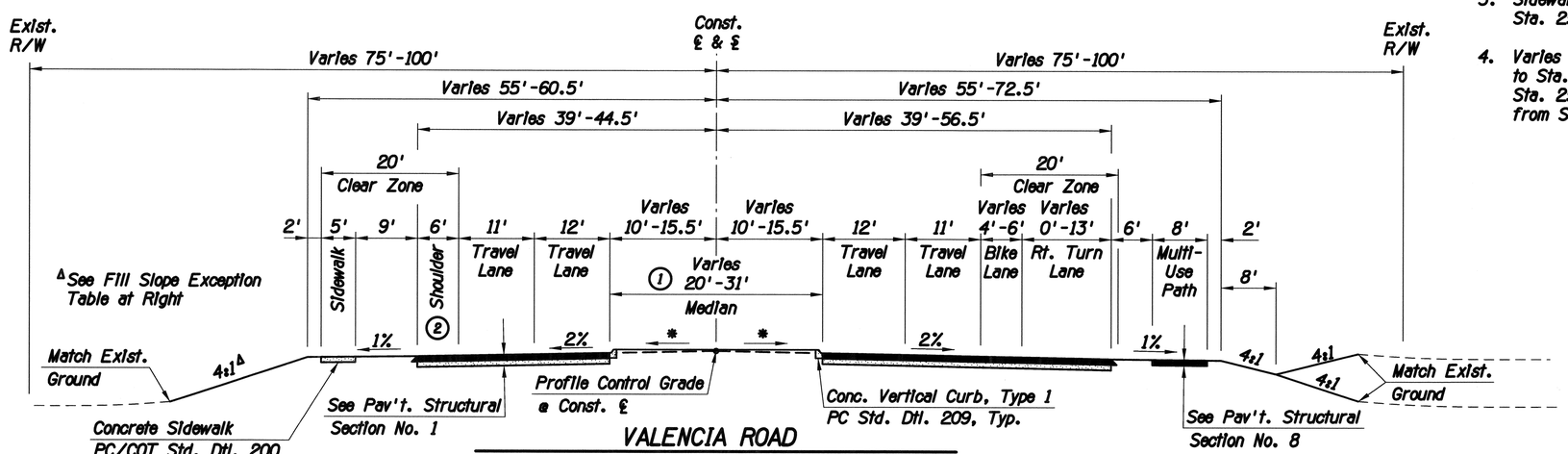

VALENCIA ROAD
Sta. 259+39.06 to Sta. 262+14.06

* See Finish Grade Detail This Sheet

TYPICAL SECTIONS

Scales	Horiz. 1"=NA	Sheet G5 of G9	Page 6 of 281
	Vert. 1"=NA		

Print Scale: 1:40

TRACS No. SS975 01C

Pima County Department of Transportation

Priscilla S. Cornelio, P.E., Director

No.	Revision Description	Engineer	Date

		Date
Designed	ABL	03/2014
Drawn	ABL	03/2014
Checked	RDB	03/2014
Proj. Engr.	RDB	03/2014

Registered Professional Engineer (Civil) CERTIFICATE NO. 13762 ROBERT DEAN BRITTAIN Date Signed 7-21-14 ARIZONA U.S.A. Expires 3-31-17

HDR Engineering, Inc. 5210 E. Williams Circle, Suite 530 Tucson, AZ 85711-4459 (520) 594-3600

VALENCIA ROAD
WADE ROAD TO MARK ROAD
PROJECT NO. 4RTVWW

Pentable: 152226_PLOTORDR.TBL
Plotdriver: 152226_V8FULL_B&W_PDF.plt

Project ID: 0000000000152226
Client Number: 012145

ProjectWise Directory: Pima_County_Dept_of_Transportation\PCDOT_Valencia_Mtn_Eagle_Mark\13.00_CAD\Construction Documents\Civil\Wade to Mark\15C-01.dgn
Model: 15C-02

Printed By: jefrey Date: 7/21/2014 2:13:54 PM

F.H.W.A. REGION	STATE	PROJECT NO.	SHEET NO.	TOTAL SHEETS	AS BUILT
9	ARIZ.	STP-PPM-0(230)A			
		0000 PM PPM SS975 01C			

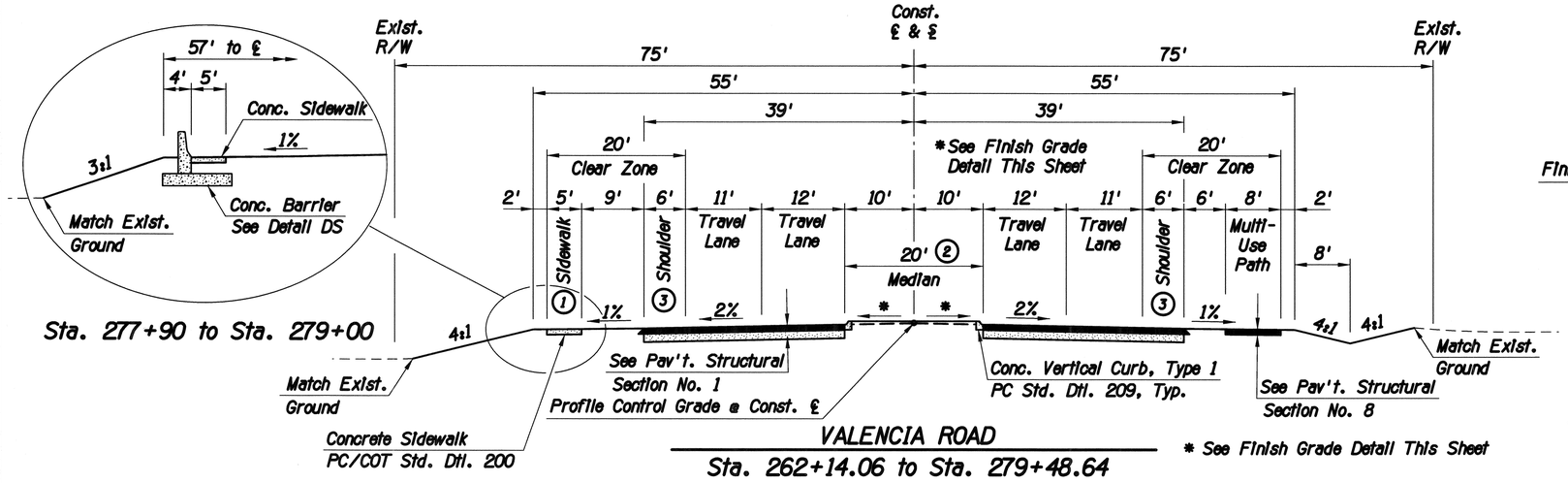

VALENCIA ROAD
Sta. 262+14.06 to Sta. 279+48.64

* See Finish Grade Detail This Sheet

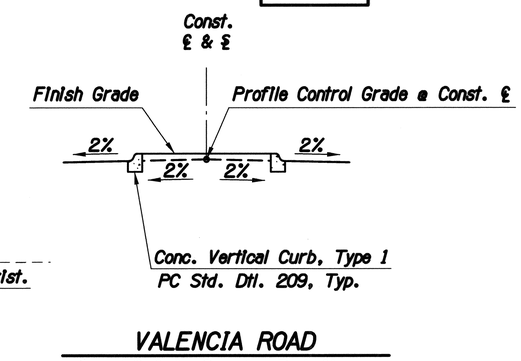

VALENCIA ROAD
Finish Grade Detail

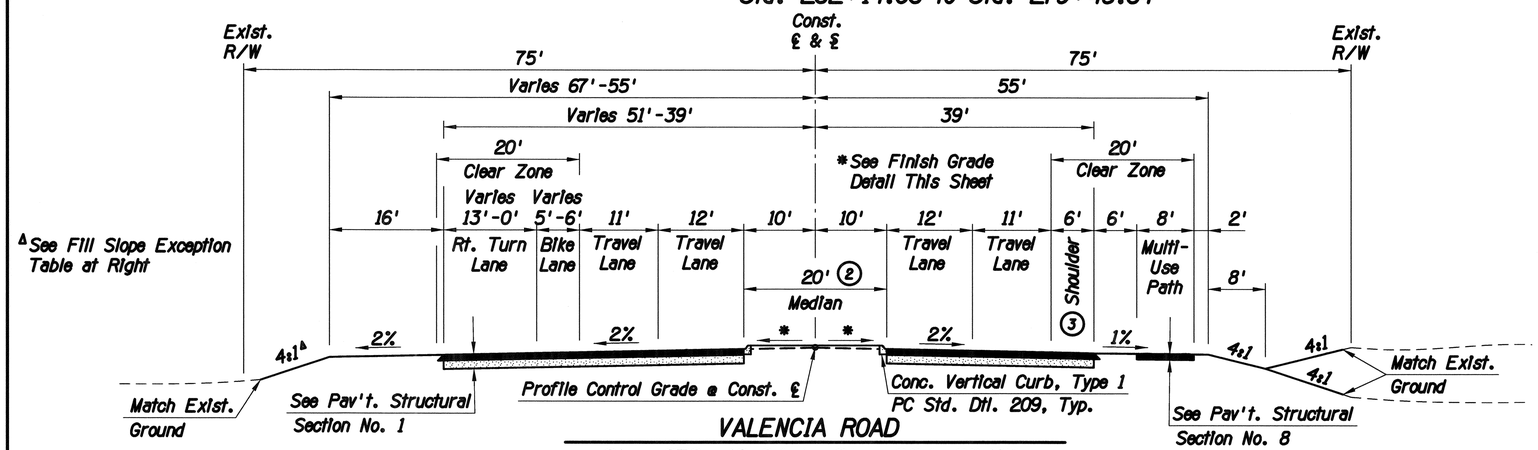

VALENCIA ROAD
Sta. 279+48.64 to Sta. 284+88.75

* See Finish Grade Detail This Sheet

+CUT SLOPE EXCEPTION TABLE		
Station	Side	Slope Control
332+35 to 332+80	Left	Varies 4:1 to 2.9:1, toe of slope to match existing ground at right-of-way.

ΔFILL SLOPE EXCEPTION TABLE		
Station	Side	Slope Control
282+80 to 284+00	Left	Varies between 4:1 to 2.5:1 within this segment. Toe of slope to match existing ground at right-of-way. See Landscape Plans for Rock Mulch treatment.

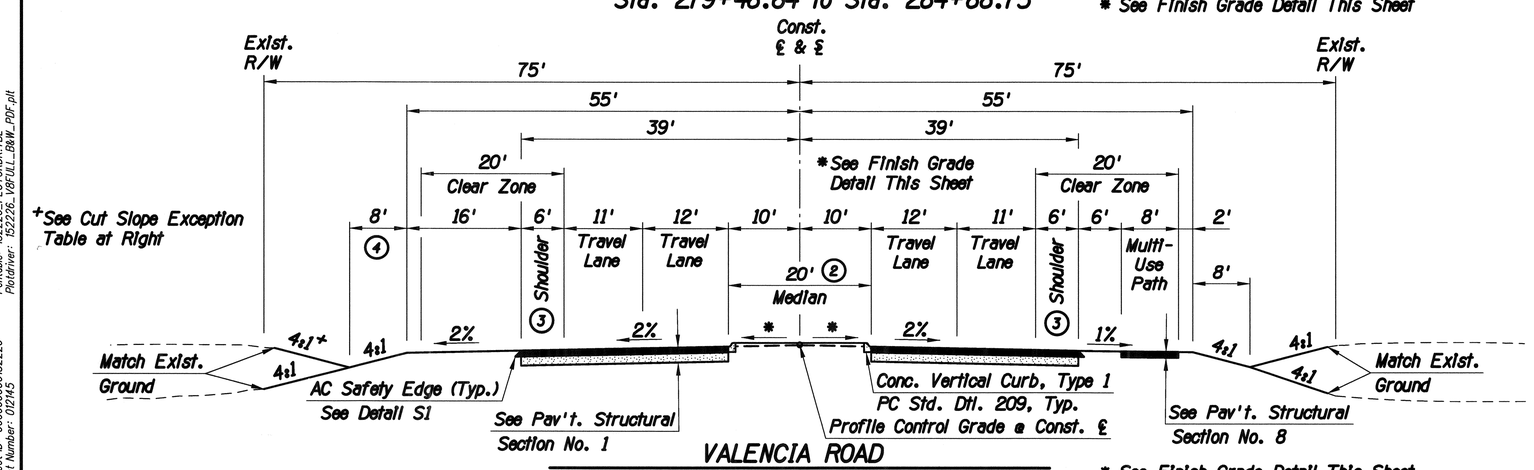

VALENCIA ROAD
Sta. 284+88.75 to Sta. 337+00.00

* See Finish Grade Detail This Sheet

Note:

1. Sidewalk is on North side from Sta. 252+30 to Sta. 278+97.
2. For Left Turn Bay Details See Special Detail G.
3. Install ground-in rumble strips per Detail I.
4. Varies from 8' to 12' from Sta. 330+75 to Sta. 332+25. 12' from Sta. 332+25 to Sta. 332+75. Varies from 12' to 8' from 332+75 to 333+00.

TYPICAL SECTIONS

Scales	Horiz. 1"=NA	Sheet G6 of G9	Page 7 of 281
	Vert. 1"=NA		

Pima County Department of Transportation
Priscilla S. Cornelio, P.E., Director

No.	Revision Description	Engineer	Date

			Date
Designed	ABL		03/2014
Drawn	ABL		03/2014
Checked	RDB		03/2014
Proj. Engr.	RDB		03/2014

Registered Professional Engineer (Civil) CERTIFICATE NO. 13762 ROBERT DEAN BRITTAIN Date Signed 7-21-14 ARIZONA U.S.A. Expires 3-31-17

HDR Engineering, Inc.
1520 East Williams Circle, Suite 530
Tucson, AZ 85711-4453
(520) 584-3600

VALENCIA ROAD
WADE ROAD TO MARK ROAD
PROJECT NO. 4RTVWW

Pentable: 152226_PLOTDRDR.TBL
Plotdriver: 152226_V8FULL_BW_PDF.plt
Project ID: 0000000000152226
Client Number: 012145

ProjectWise Directory: Pima_County_Dept_of_Transportation\PCDOT_Valencia_Mtn_Eagle_Mark\13.00_CAD\Construction Documents\Civil\Wade to Mark\15C-01.dgn
Model: 15C-03
Printed By: jefrey Date: 7/21/2014 2:13:56 PM
Print Scale: 1:40

TRACS No. SS975 01C

F.H.W.A. REGION	STATE	PROJECT NO.	SHEET NO.	TOTAL SHEETS	AS BUILT
9	ARIZ.	STP-PPM-0(230)A			
		0000 PM PPM SS975 OIC			

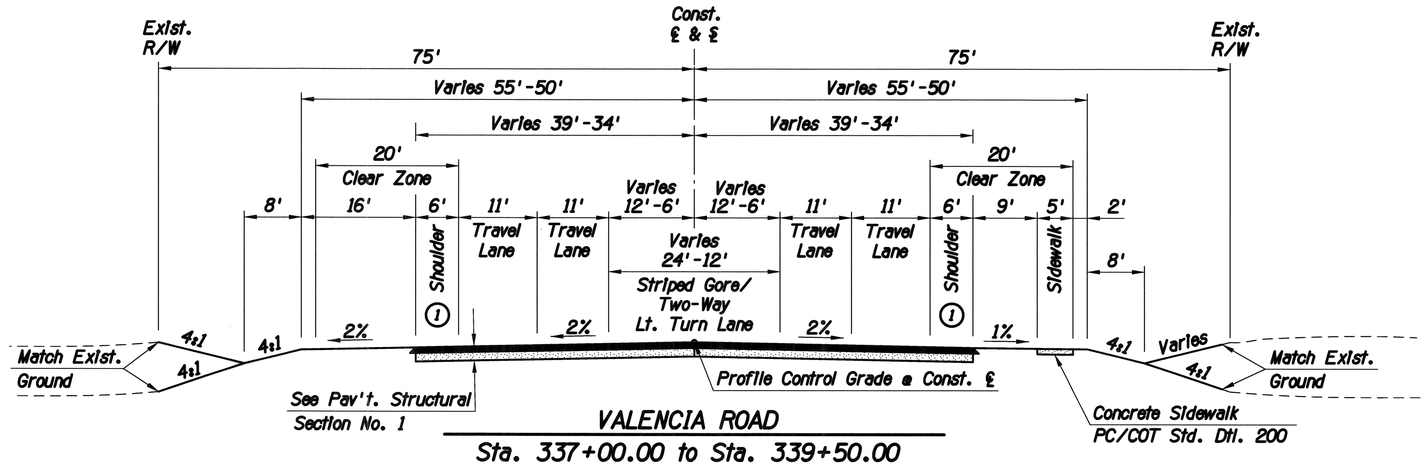

VALENCIA ROAD
Sta. 337+00.00 to Sta. 339+50.00

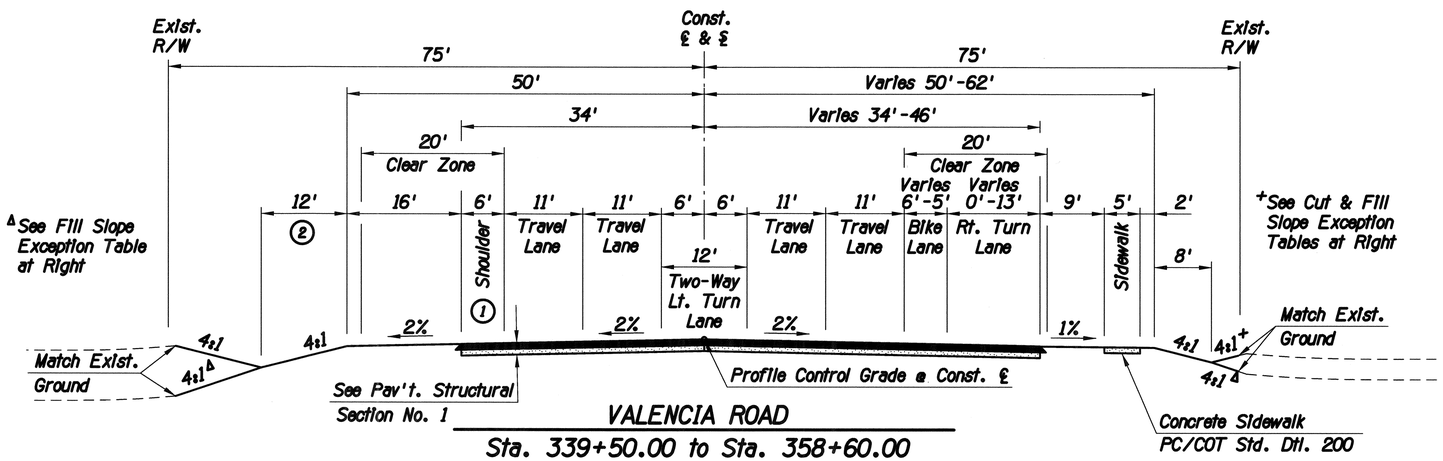

VALENCIA ROAD
Sta. 339+50.00 to Sta. 358+60.00

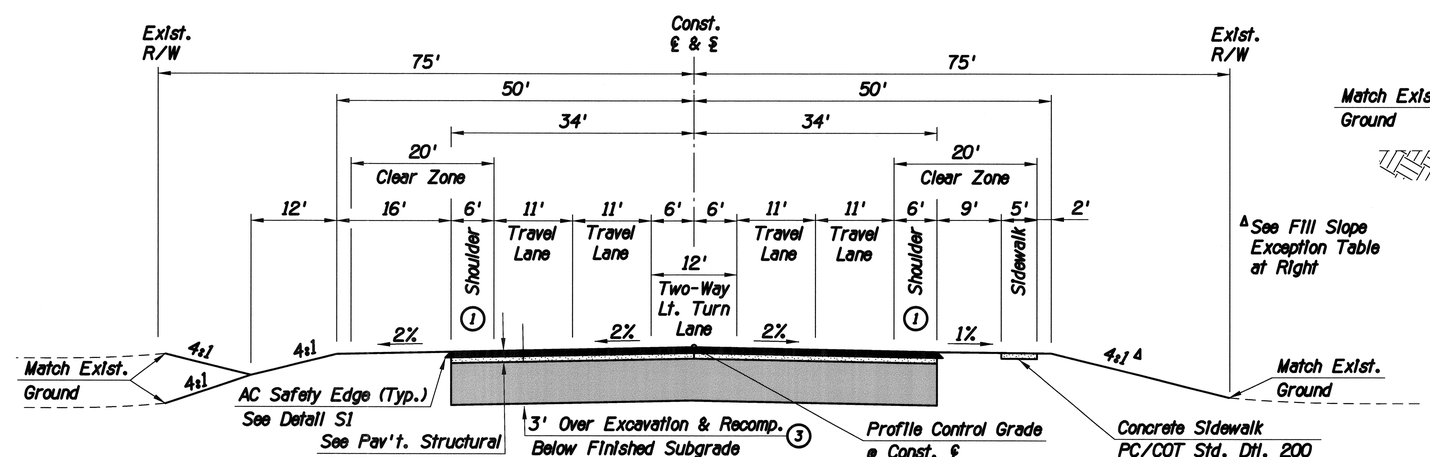

VALENCIA ROAD
Sta. 358+60.00 to Sta. 368+80.00

Note:

1. Install ground-in rumble strips per Detail I.
2. 8' from Sta. 339+50 to Sta. 350+40. Varies from 8' to 12' from Sta. 350+40 to Sta. 350+65.
3. From Sta. 363+00 to 368+80, the soil within 3' of the finished subgrade shall be removed and recompacted to a minimum of 95% of the maximum dry density. Bid Item No. Is 2030502.

+CUT SLOPE EXCEPTION TABLE

Station	Side	Slope Control
344+70 to 346+70	Right	Varies 4:1 to 2.4:1, toe of slope to match existing ground at right-of-way. See Landscape Plans for Rock Mulch treatment.

ΔFILL SLOPE EXCEPTION TABLE

Station	Side	Slope Control
347+70 to 349+95	Right	4:1 slope to match existing ground. There will be no cut ditch in this station range.
349+50 to 350+40	Left	4:1 slope to match existing ground. There will be no cut ditch in this station range.
354+25 to 368+80	Right	4:1 slope to match existing ground. There will be no cut ditch in this station range.

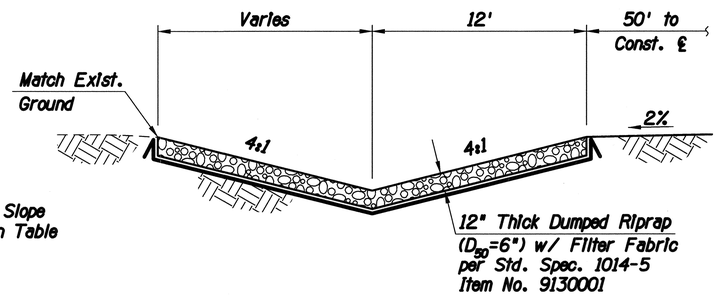

RIPRAP LINING DETAIL
Sta. 350+40.00 to Sta. 368+80.00, Left

TYPICAL SECTIONS

Priscilla S. Cornelio, P.E., Director
Pima County Department of Transportation

No.	Revision Description	Engineer	Date

		Date
Designed	ABL	03/2014
Drawn	ABL	03/2014
Checked	RDB	03/2014
Proj. Engr.	RDB	03/2014

Registered Professional Engineer (Civil) CERTIFICATE NO. 13762 ROBERT DEAN BRITTAIN Date Signed 7-21-14 ARIZONA U.S.A. Expires 3-31-15

HDR Engineering, Inc. 5226 East Williams Circle, Suite 530 Tucson, AZ 85711-4489 (520) 564-3600

VALENCIA ROAD
WADE ROAD TO MARK ROAD
PROJECT NO. 4RTVMW

Scales	Horiz. 1"=NA Vert. 1"=NA	Sheet G7 of G9	Page 8 of 281

Print Scale: 1:40
TRACS No. SS975 01C

Pentable: 152226_PLOTORDR.TBL
Plotdriver: 152226_V8FULL_B&W_PDF.plt
Project ID: 0000000000152226
Client Number: 012145

ProjectWise Directory: Pima_County_Dept_of_Transportation\PCDOT_Valencia_Mtn_Eagle_Mark\13.00_CAD\Construction Documents\Civil\Wade to Mark\15C-01.dgn
Model: 15C-04
Printed By: jefrey Date: 7/21/2014 2:13:59 PM

F.H.W.A. REGION	STATE	PROJECT NO.	SHEET NO.	TOTAL SHEETS	AS BUILT
9	ARIZ.	STP-PPM-0(230)A			
		0000 PM PPM SS975 01C			

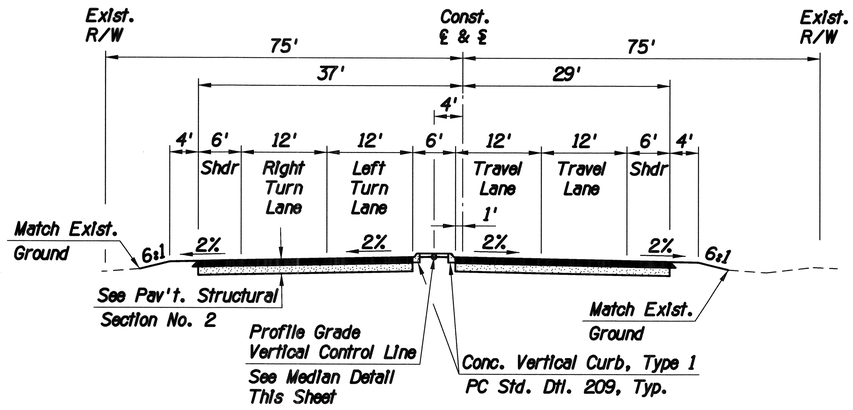

WADE ROAD

ECR to Sta. 12+38.00

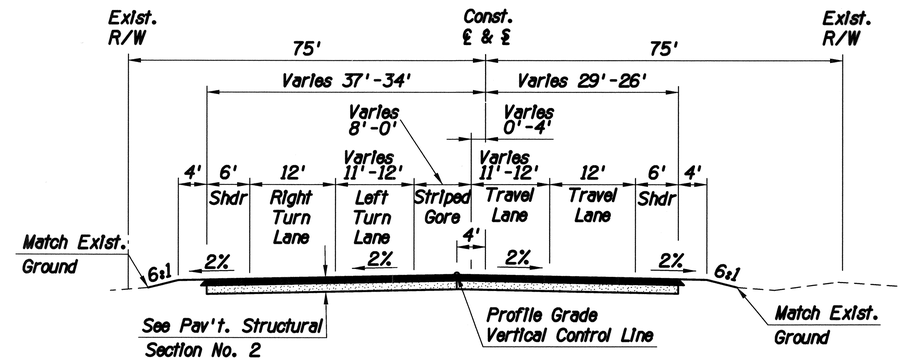

WADE ROAD

Sta. 12+38.00 to Sta. 13+88.00

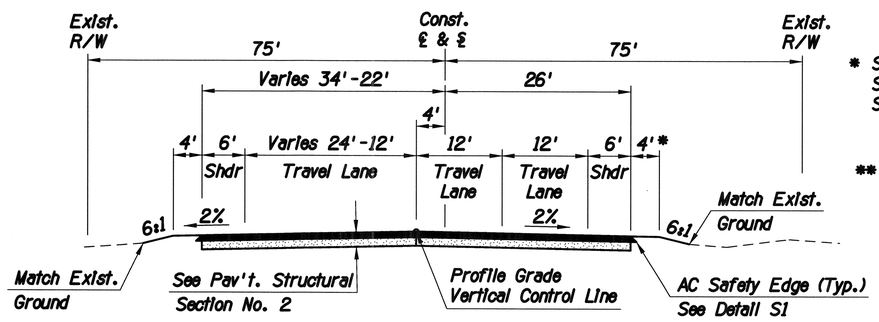

WADE ROAD

Sta. 13+88.00 to Sta. 16+69.00

* Sta. 14+00 to 14+14, varies 4' to 18'.
Sta. 14+14 to 14+42, 18'.
Sta. 14+42 to 14+56, varies 18' to 4'.

** Offset from Profile Grade Vertical Control Line to Const. Centerline varies from 4.0' at Sta. 18+00.00 to 0.0' at Sta. 18+66.00

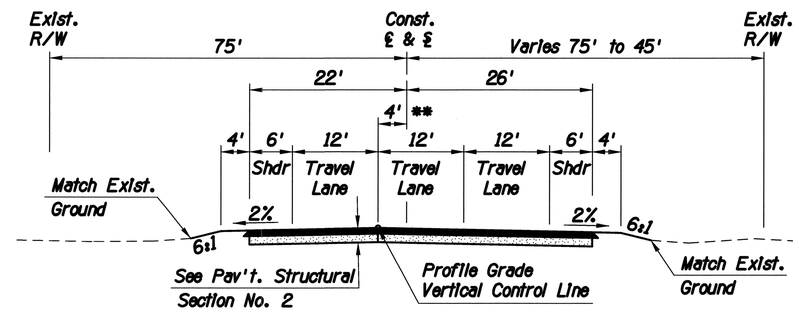

WADE ROAD

Sta. 16+69.00 to Sta. 18+66.00

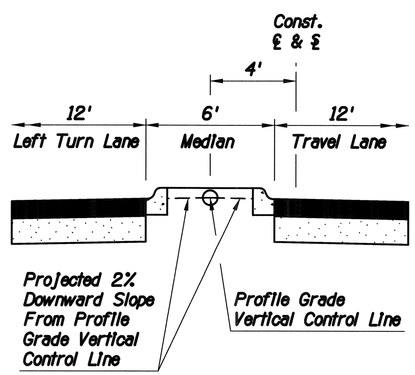

MEDIAN DETAIL

TYPICAL SECTIONS

Pima County Department of Transportation

Priscilla S. Cornelio, P.E., Director

		Date
Designed	KAM	03/2014
Drawn	KAM, JMF	03/2014
Checked	RDB	03/2014
Proj. Engr.	RDB	03/2014

No.	Revision Description	Engineer	Date

Registered Professional Engineer (Civil) CERTIFICATE NO. 13762 ROBERT DEAN BRITTAIN Date Signed 7-18-14 ARIZONA U.S.A. Expires 3-31-17

HDR Engineering, Inc. 5210 East Williams Circle, Suite 530 Tucson, AZ 85711-4459 (520) 594-3600

VALENCIA ROAD
WADE ROAD TO MARK ROAD
PROJECT NO. 4RTVWW

Scales	Horiz. 1"=NA	Sheet G8 of G9	Page 9 of 281
	Vert. 1"=NA		

Pentable: 152226_PLOTORDR.TBL
Plotdriver: 152226_V8FULL_B&W_PDF.plt

Project ID: 0000000001152226
Client Number: 012145

ProjectWise Directory: Pima_County_Dept_of_Transportation\PCDOT_Valencia_Mtn_Eagle_Mark\13.00_CAD\Construction Documents\Civil\Wade to Mark\15C-01.dgn
Model: 15C-05

Printed By: jefrey Date: 7/21/2014 2:14:01 PM

Print Scale: 1:40

TRACS No. SS975 01C

F.H.W.A. REGION	STATE	PROJECT NO.	SHEET NO.	TOTAL SHEETS	AS BUILT
9	ARIZ.	STP-PPM-0123(01A)			
		0000 PM PPM SS975 01C			

* This dimension is 25' at Star Diamond Pl. & 29' at Viviana Rd.

** This dimension is 25' at Star Diamond Pl. & 46' to the roadway easement at Viviana Rd.

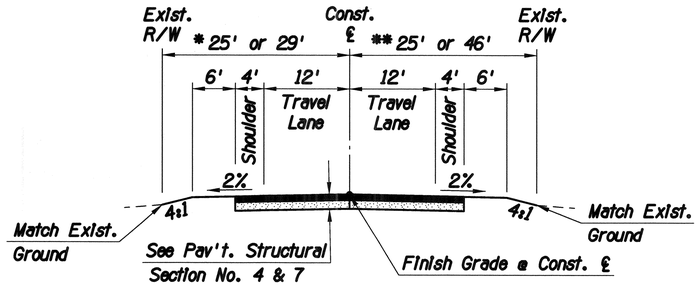

STAR DIAMOND PLACE AND VIVIANA ROAD

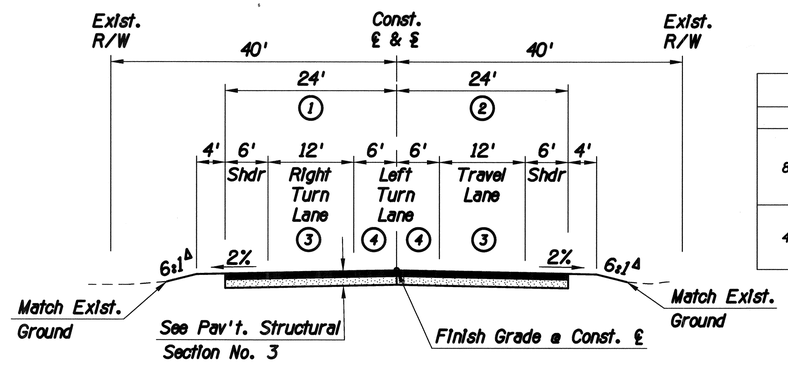

CAMINO VERDE

ΔFILL SLOPE EXCEPTION TABLE

Station	Side	Slope Control
8+86 to 9+25	Right	Varies between 6:1 to 2.6:1 within this segment. Toe of slope to match existing ground at right-of-way. See Landscape Plans for Rock Mulch treatment.
4+68 to 4+76	Left	3:1 slope within this segment. Toe of slope to match existing ground inside of existing headwall.

Note:

1. Width varies 15' to 24' from Sta. 1+63 to Sta. 5+68.
2. Width is 19' from Sta. 1+63 to Sta. 3+73. Width varies 19' to 24' from Sta. 3+73 to Sta. 5+68.
3. Width varies from 11' to 12' from Sta. 1+63 to Sta. 5+68.
4. Width varies from 0' to 6' from Sta. 1+63 to Sta. 5+68.

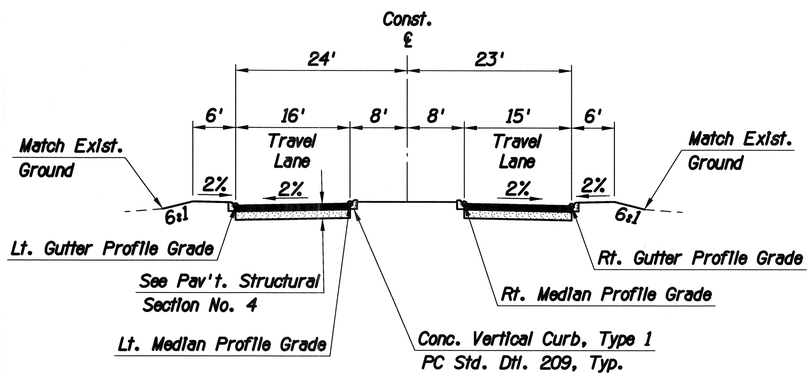

WEST CASINO ENTRANCE

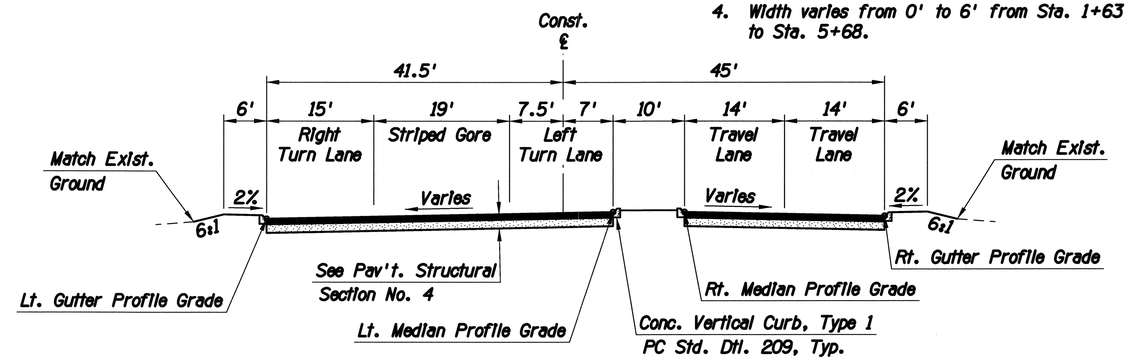

EAST CASINO ENTRANCE

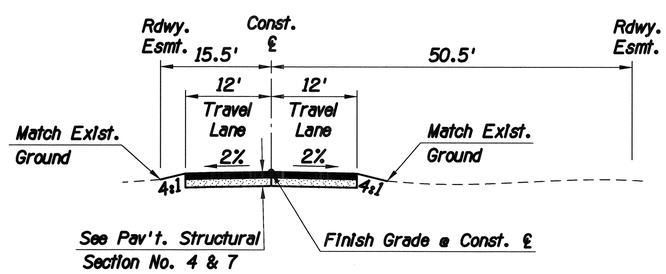

MARDICK AVENUE

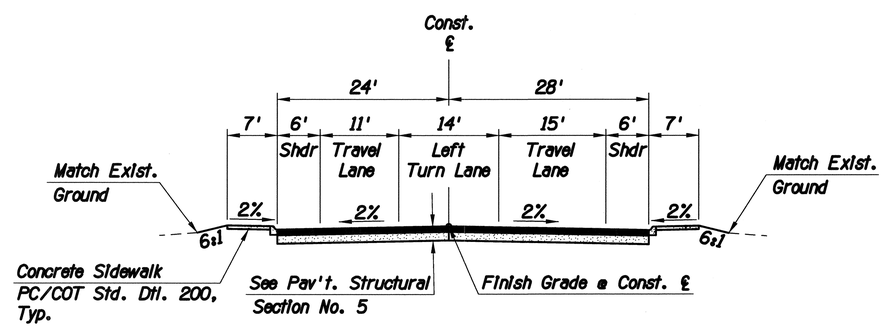

IGNACIO BAUMEA

TYPICAL SECTIONS

Scales	Horiz. 1"=NA Vert. 1"=NA	Sheet G9 of G9	Page 10 of 281

TRACS No. SS975 01C

Pima County Department of Transportation

Priscilla S. Cornelio, P.E., Director

No.	Revision Description	Engineer	Date

	KAM	KAM, JMF	RDB	RDB
Designed	Drawn	Checked	Proj. Engr.	
03/2014	03/2014	03/2014	03/2014	

Registered Professional Engineer (Civil) CERTIFICATE NO. 13762 ROBERT DEAN BRITTAIN Date Signed 9-9-13 ARIZONA U.S.A.
Expires 3-31-17

HDR Engineering, Inc.
4500 E. Williams Circle, Suite 530
Tucson, AZ 85711-4459
(520) 584-3600

VALENCIA ROAD
WADE ROAD TO MARK ROAD
PROJECT NO. 4RTVMW

Pentable: 152226_PLOTORDR.TBL
Plotdriver: 152226_V8FULL_B&W_PDF.plt

Project ID: 0000000015222 6
Client Number: 012145

ProjectWise Directory: Pima_County_Dept_of_Transportation\PCDOT_Valencia_Mtn_Eagle_Mark\13.00_CAD\Construction Documents\Civil\Wade to Mark\15C-01.dgn
Model: 15C-06

Printed By: jefrey Date: 7/21/2014 2:14:03 PM Print Scale: 1:40

F.H.W.A. REGION	STATE	PROJECT NO.	SHEET NO.	TOTAL SHEETS	AS BUILT
9	ARIZ.	STP-PPM-0(230)A			
		0000 PM PPM SS975 01C			

Plan Reference Number	Structure Number	New	Extend	Number of Barrels	Barrel Span (0.0)	Barrel Height (0.0)	Culvert Length (0.0)	Skew (Degree) (0)	B-01.10 Miscellaneous Details	B-01.11 Extension Details	◪ Standard or Detail	▲ Location	Inlet Wings	Outlet Wings	◪ Standard or Detail (Wings)	Apron	◪ Standard or Detail (Apron)	Scour/Bank Protection	◪ Standard or Detail (Scour/Bank Protection)	Energy Dissipators	◪ Standard or Detail (Energy Dissipators)	Barrel Length (Construction ℄)	Barrel Length (Existing & Construction ℄)	Linear Feet (0.0) ▲ Left of ℄ I	II	III	IV	V	Linear Feet (0.0) ▲ Right of ℄ V	IV	III	II	I	Reinforcing Steel (0)	Place Dowels	Class S Concrete f'c=3,000 PSI (0)	Remove Str Concrete (0)	Structural Excavation (0)	Structure Backfill (0)	Berm Embankment (0)	Dike Embankment (0)	Drainage Excavation (0)	REMARKS
1		X		2	10	5	112	0°	X		B-02.20	Left		X	B-04.10	X	B-06.10	X	DE			58																							917	Detail DD1
Station: 237+30 Valencia Road												Right	X		B-08.10	X	DD1																54								98				
Existing:																																Box Culvert Total		41,054		314		757	178		98	917	
2		X		4	10	5	145	30° Lt.	X		B-02.40	Left		X	B-04.50	X	B-06.10	X	DE			76																			7		888	Detail DD2
Station: 253+66 Valencia Road												Right	X		B-08.10	X	DD2																69												
Existing:																																Box Culvert Total		92,960		695		1,247	313	7		888	
3		X		1	8	4	137	30° Lt.	X		B-02.10	Left		X	DP	X	DP	X	DJ			72																							41	Detail DD3
Station: 278+40 Valencia Road												Right	X		B-08.10	X	DD3																65								2				
Existing:																																Box Culvert Total		21,959		162		366	156		2	41	
5		X		1	6	4	119	15° Lt.	X		B-02.10	Left		X	B-04.10	X	B-06.10	X	DE			60																							391	Detail DD5
Station: 289+55 Valencia Road												Right	X		B-08.10	X	DD5																59												
Existing:																																Box Culvert Total		15,192		123		265	133			391	
6		X		9	10	5	169	45° Lt.	X		B-02.40	Left		X	B-04.50	X	B-06.10	X	DE			92																			91		4,837	Detail DD6
Station: 296+70 Valencia Road											B-02.50	Right	X		B-08.10	X	DD6																77									358			
Existing:																																Box Culvert Total		235,275		1,703		4,566	227	91	358	4,837	
7		X		9	10	5	136	30° Lt.	X		B-02.40	Left		X	B-04.50	X	B-06.10	X	DE			68																							1,793	Detail DD7
Station: 310+50 Valencia Road											B-02.50	Right	X		B-08.10	X	DD7																68									82			
Existing:																																Box Culvert Total		189,280		1,374		2,385	309		82	1,793	
																																Sheet Total		595,720		4,371		9,586	1,316	98	540	8,867	

Notes:

1. For structural excavation, structure backfill placement and measurement, See ADOT Standard Drawing B-19.50.
2. The zeroes in parentheses (0, 0.0 & 0.00) indicate the dimensional precision for that column.
3. Totals shown for the box culvert include the quantities for headwalls, wings, aprons, curbs, cut-off walls and laps at construction joints.

◪ ADOT Structures Section Standard Drawings June, 1992 (Publication No. 31-002) (English Edition)

▲ Construction/Looking Ahead

BOX CULVERT SUMMARY SHEET

No.	Revision Description	Engineer	Date

Designed	JMF	03/2014
Drawn	JMF	03/2014
Checked	RDB	03/2014
Proj. Engr.	RDB	03/2014

Priscilla S. Cornelio, P.E., Director

Pima County Department of Transportation

HDR Engineering, Inc.
4120 East Williams Circle, Suite 530
Tucson, AZ 85711-4459
(520) 584-3600

VALENCIA ROAD
WADE ROAD TO MARK ROAD
PROJECT NO. 4RTVMW

Scales	Horiz. 1"=NA Vert. 1"=NA	Sheet S1 of S3	Page 11 of 281

TRACS No. SS975 01C

F.H.W.A. REGION	STATE	PROJECT NO.	SHEET NO.	TOTAL SHEETS	AS BUILT
9	ARIZ.	STP-PPM-0(230)A			
		0000 PM PPM SS975 01C			

NOTE:
THE ZEROS IN PARENTHESIS (0, 0.0 & 0.00) IN THE HEADING OF SOME OF THE COLUMNS ARE THE RECOMMENDED PRECISION OF THE VALUE TO BE ENTERED IN THE COLUMN.

NOTE:
FOR PIPE CULVERT PLACEMENT SEE PC/COT Standard Detail 108

NOTE:
PIPE OPTIONS SELECTED ARE THOSE REQUIRED TO MEET MINIMUM SERVICE LIFE.
SHADED PIPE OPTION FIELDS ARE NOT ALLOWABLE ALTERNATES.

SRSP - SPIRAL RIB STEEL PIPE
CSP - CORRUGATED STEEL PIPE
CAP - CORRUGATED ALUMINUM PIPE
RCP - REINFORCED CONCRETE PIPE
NRCP - NON-REINFORCED CONCRETE PIPE
NRCIPCP - NON-REINFORCED CAST-IN-PLACE CONCRETE PIPE
CHDPEPP - CORRUGATED HIGH DENSTIY POLYETHYLENE PLASTIC PIPE

DESCRIPTION							CSP																										END TREATMENT																				QTY	
				In.	In.	Ft.	Degree	In.	Coating								In.										In.						Each																						C.Y.	
																																	Catch basin, Manhole, Headwall & Junction Structure																							
																																		Ea	Inlet			Outlet																			
Station	Plan Ref No.	Controlling Fill Height Range	Size, Corrugated	Size, Smooth	Length (0)	Skew (0)	Corrugation	Wall Thickness (0.00)	Zinc	Bit. Coated Zinc	Aluminum	Bit. Coated Aluminum	Corrugation	Wall Thickness (0.00)	Zinc	Bit. Coated	Class - Non Trench	Class - Trench	Class	Min Wall Thickness (0)	AASHTO M-294 Type C	AASHTO M-294 Type S	C-13.20 & C-13.25	Detail	Size, (in) Manhole	Standard or Detail	End Sec (Note 2)	S-Single / D-Double	Location	ADOT B Standard	Location	Sheet	Depth	L (0.0)	Inlet Depression In.	Inlet Depression Ft.	Pipe Excavation	Trench Backfill	COMMENTS
Sta. 232+80	1	1		36	228							F	0.064	X											C-15.75	D		Rt.	B-11.11	Lt.	D1					215	18	Two Pipes, Drainage Excavation = 109 C.Y.
Sta. 241+82	2	1		36	129	10° Rt.						F	0.064	X									1		C-15.75	S		Rt.								71	15	Drainage Excavation = 70 C.Y.
Sta. 254+95, Lt.	3	1	36		64	41° Rt.	A	0.064	X														2													9	2	Detail C, Detail DK
Sta. 257+80	4	1		36	248	55° Lt.						F	0.064	X									1		D0			Rt.								225	60	Drainage Excavation = 128 C.Y.
Sta. 332+49, Lt.	5	1	18		34		A	0.064	X														2													8	0	Detail C, Detail DK
Sta. 350+32	6	1		18	122	10° Rt.						F	0.064	X									2													29	4	
Sta. 281+75	7	1		48	134	15° Lt.						F	0.064	X											DD4				B-11.13	Lt.	D7					121	21	Drainage Excavation = 395 C.Y., Detail DD4
Sheet Total																							8																

FILL HEIGHT RANGE TABLE (Ft.)													
RANGE NO.		1	2	3	4	5	6	7	8	9	10	11	12
FILL	>	1	3	5	8	11	15	20	25	30	40	55	70
HEIGHT (Ft.)	≤	3	5	8	11	15	20	25	30	40	55	70	90

SHOULD FIELD CONDITIONS VARY FROM THE RANGE INDICATED, CONTACT DESIGN FOR RE-EVALUATION OF PIPE DESIGN REQUIREMENTS.

PIPE CORRUGATION			
A	2⅔x½	B	3x1
C	9x2½	D	6x2
E	6x2 or 9x2½		
F	¾x¾x7½		

Notes:
1. Station shown is approximate. See pipe profiles for stationing.
2. ADOT C & B Stds.

PIPE SUMMARY SHEET

REV. DATE: 01-31-2002

Penitable: 152226_PLOTORDR.TBL
Plotdriver: 152226_VBFULL_B&W_PDF.plt

Project ID: 0000000015222 6
Client Number: 012145

Priscilla S. Cornelio, P.E., Director

Pima County Department of Transportation

No.	Revision Description	Engineer	Date

		Date
Designed	ABL	03/2014
Drawn	ABL	03/2014
Checked	RDB	03/2014
Proj. Engr.	RDB	03/2014

Registered Professional Engineer (Civil) 31803 ARTURO B. LEDESMA ARIZONA, U.S.A. Expires: 12-31-2016

HDR Engineering, Inc.
5210 E. Williams Circle, Suite 530
Tucson, AZ 85711-4459
(520) 594-3600

VALENCIA ROAD
WADE ROAD TO MARK ROAD
PROJECT NO. 4RTVMW

Scales	Horiz. 1"=NA Vert. 1"=NA	Sheet S2 of S3	Page 12 of 281

TRACS No. SS975 01C

ProjectWise Directory: Pima_County_Dept_of_Transportation\PCDOT_Valencia_Mtn_Eagle_Mark\13.00_CAD\Construction Documents\Drainage\Wade to Mark\16D-01.dgn
Model: 16D-02
Printed By: jefrey Date: 7/21/2014 2:14:11 PM
Print Scale: 1:10

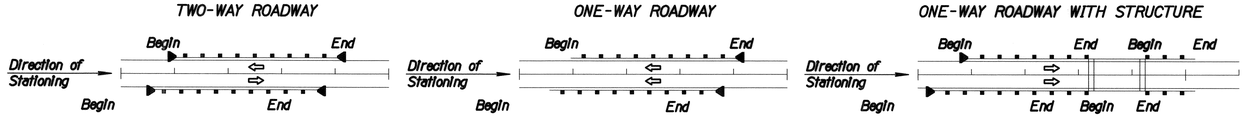

F.H.W.A. REGION	STATE	PROJECT NO.	SHEET NO.	TOTAL SHEETS	AS BUILT
9	ARIZ.	STP-PPM-0(230)A			
		0000 PM PPM SS975 OIC			

Beginning Station (Approximate) (0)	Plan Reference No. ◇	Type "A" C-10.01, Type "B" C-10.02	C-10.03 (Timber)	C-10.04 (Steel)	Detail	Length Linear Feet (0.0)	C-10.06 Nested W Beam ▲ Length Linear Feet (0.0)	C-10.07 Bolted Anchor (Each)	Reconstruct - Exist. Post. Block	Reconstruct - New Post. Block	Remove and Salvage	Construct from Salvage	Remove Length (Linear Feet) (0.0)	Remove Existing Length (Linear Feet) (0.0)	C-10.40 (32" Median)	C-10.41 (42" Median)	C-10.50 (32" Half)	C-10.51 (32" Half w/ Sidewalk)	C-10.52 (32" Half w/ Gutter) ▲	C-10.53 (42" Half w/ Gutter) ▲	C-10.54 (32" Half at Pier's)	C-10.55 (42" Half at Pier's)	Detail DS	Detail DU	Length Linear Feet (0.0)	High-Tension Cable Barrier Length (Linear Feet) (0)	C-12.30 Chain-Link Cable Length (Linear Feet) (0.0)	Begin = Treatment at Begin End = Treatment at End	C-10.30 Thrie Beam	Bridge Thrie Beam	Reconstruct Rub Rail	C-10.70 32" or C-10.72 42"	C-10.71 32" or C-10.73 42" △	C-10.74 42" to 32"	C-10.75 32" to C&G ◆	C-10.76 32" on Radius	Bridge Barrier Detail	New	Reconstruct (See Special Prv)	Remove and Salvage	Construct from Salvage	Remove	Tangent ET Plus or SKT-350 ◧	Flared SRT-350 or FLEAT-350 ◧	End Anchor C-10.08	High-Tension Cable Terminal	Sand Barrels C-1 or Detail	Attenuator Detail	BCT (L=12.5')	REMARKS
Rt. 235+92	01	A	X			125.0		4																				Begin									X					1								See Detail O for ET-Plus.
																												End									X						1						
Lt. 237+11	02	A	X			175.0		3																				Begin									X					1								See Detail O for ET-Plus.
																												End									X						1						
Lt. 252+54	03																					X		52.5				Begin																						
																												End																						
Lt. 253+57	04																					X		121.2				Begin																						
																												End																						
Rt. 253+50	05																					X		39.2				Begin																						
																												End																						
Rt. 276+17	06	A	X			200.0		2																				Begin									X					1								See Detail O for ET-Plus.
																												End									X						1						
Lt. 277+90	07																					X		13.7				Begin																						
																												End																						
Lt. 278+14	08																					X		100.6				Begin									X					1								See Detail O for ET-Plus.
																												End									X						1						
Rt. 287+51	09					175.0		2																				Begin									X					1								See Detail O for ET-Plus.
																												End									X						1						
Lt. 289+24	10	A	X			150.0		1																				Begin									X					1								See Detail O for ET-Plus.
																												End									X						1						
Rt. 294+31	11	A	X			325.0		23																				Begin									X					1								See Detail O for ET-Plus.
																												End									X						1						
Lt. 294+96	12	A	X			300.0		23																				Begin									X					1								See Detail O for ET-Plus.
																												End									X						1						
Rt. 308+15	13	A	X			275.0		18																				Begin									X					1								See Detail O for ET-Plus.
																												End									X						1						
Lt. 309+26	14	A	X			275.0		19																				Begin									X					1								See Detail O for ET-Plus.
																												End									X						1						
SHEET TOTAL						2,000.0		95																327.2																		9	9							

The zeros in parentheses (0.0) indicate the dimensional precision for that column.

▲ The length of nested W-Beam is for types 2 or 3 (37.5'). Determination of type (1, 2 or 3) to use is made in the field. The pay quantity is the length installed per Std. C-10.06 (25.0' or 37.5').

△ Specify gutter width under "Remarks".

See ADOT Std. C-10.00 for Guardrail Measurement Limits.

◆ Specify Type 1 or 2 under "Remarks".

◪ Allowable End Treatment options are indicated with the number "1" in the space. Blank spaces are not viable alternatives.

■ Array type and angle is noted under "Remarks".

◧ Note: For as-built preparation - circle end treatment installed.

BARRIER SUMMARY SHEET

Scales	Horiz. 1"=NA	Sheet S3 of S3	Page 13 of 281
	Vert. 1"=NA		

TRACS No. SS975 01C

Pima County Department of Transportation

Priscilla S. Cornelio, P.E., Director

No.	Revision Description	Engineer	Date

			Date
Designed	JMF		03/2014
Drawn	JMF		03/2014
Checked	RDB		03/2014
Proj. Engr.	RDB		03/2014

Registered Professional Engineer (Civil) CERTIFICATE NO. 13762 ROBERT DEAN BRITTAIN Date Signed 7-21-14 ARIZONA U.S.A.

Exp Date 3-31-17

HDR

HDR Engineering, Inc.
5210 East Williams Circle, Suite 530
Tucson, AZ 85711-4459
(520) 584-3600

VALENCIA ROAD
WADE ROAD TO MARK ROAD
PROJECT NO. 4RTVMW

Pentable: 152226_PLOTORDR.TBL
Plotted By: jefrey Date: 7/21/2014 Time: 2:14:13 PM
Plotted Dev: DWG To PDF.pltcfg Plot Scale: 1:1 Plot Date: 7/21/2014
Project ID: 0000000001152226
Client Number: 012145

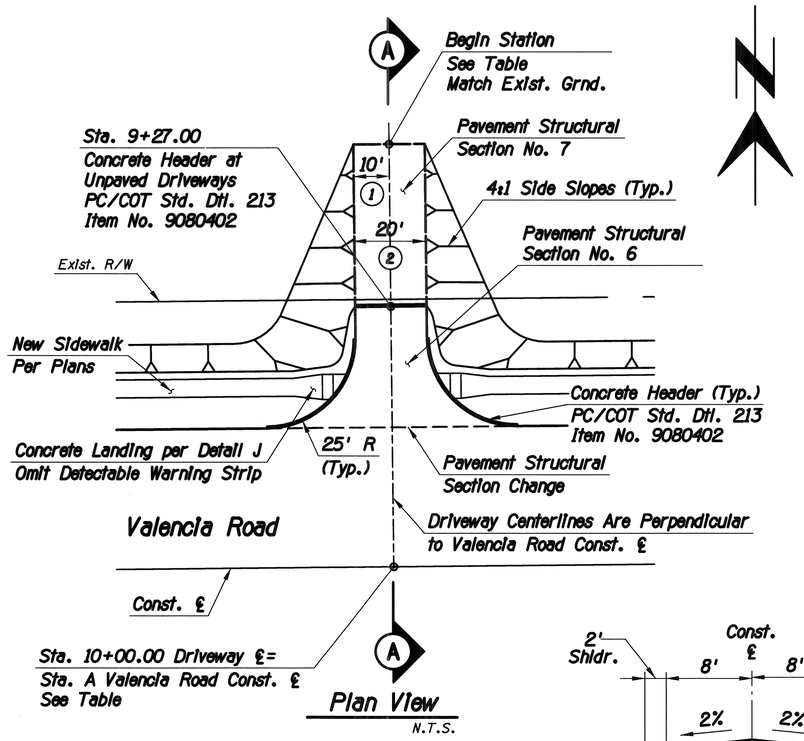

Plan View
N.T.S.

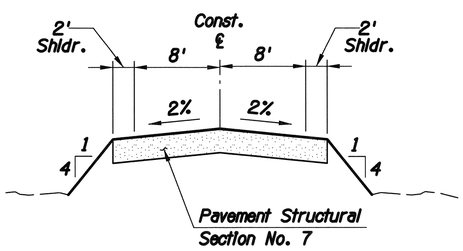

Typical Section
N.T.S.

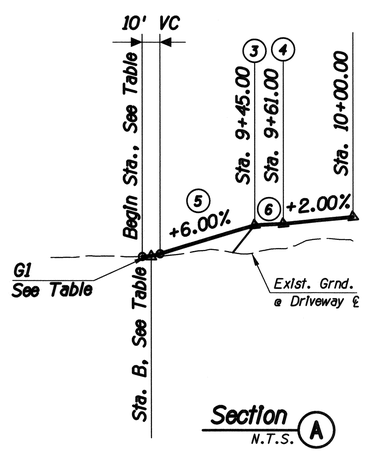

Section (A)
N.T.S.

Notes:
1. For Driveways at Sta. 273+59.00 and Sta. 276+27.00, Width is 6'. For Driveway at Sta. 287+76.00, Width is 15'.
2. For Driveways at Sta. 273+59.00 and Sta. 276+27.00, Width is 12'. For Driveway at Sta. 287+76.00, Width is 30'.
3. For Driveway at Sta. 260+28.00, Sta.=9+41.28.
4. For Driveway at Sta. 260+28.00, Sta.=9+57.28.
5. For Driveway at Sta. 276+27.00, Grade is +10.00%.
6. For Driveways at sidewalk locations, Grade is +1.00%. For all other Driveways, Grade is +2.00%.

Station A	Begin Station	G1	Station B
Sta. 260+28.00	Sta. 8+77.00	-1.06%	Sta. 8+82.00
Sta. 262+75.00	Sta. 8+83.00	0.46%	Sta. 8+88.00
Sta. 263+50.00	Sta. 8+78.00	1.16%	Sta. 8+83.00
Sta. 266+24.00	Sta. 8+65.00	0.00%	Sta. 8+70.00
Sta. 269+00.00	Sta. 8+69.00	0.00%	Sta. 8+74.00
Sta. 270+80.00	Sta. 8+71.00	1.43%	Sta. 8+76.00
Sta. 273+59.00	Sta. 8+76.00	0.14%	Sta. 8+81.00
Sta. 276+27.00	Sta. 9+08.00	0.95%	Sta. 9+13.00
Sta. 287+76.00	Sta. 8+66.00	0.14%	Sta. 8+71.00

DETAIL A
North Driveways

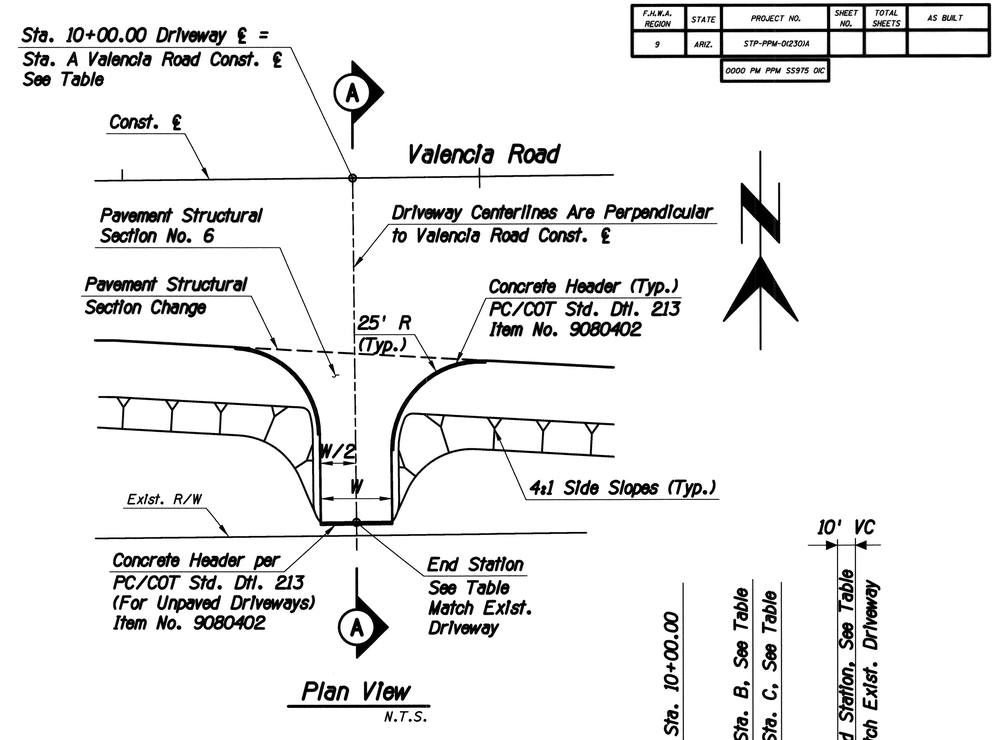

Plan View
N.T.S.

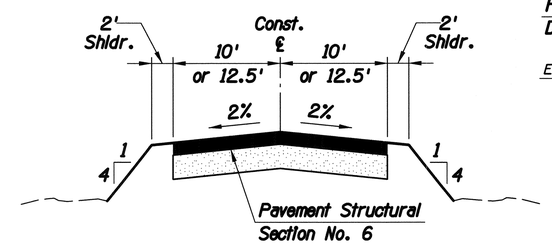

Typical Section
N.T.S.

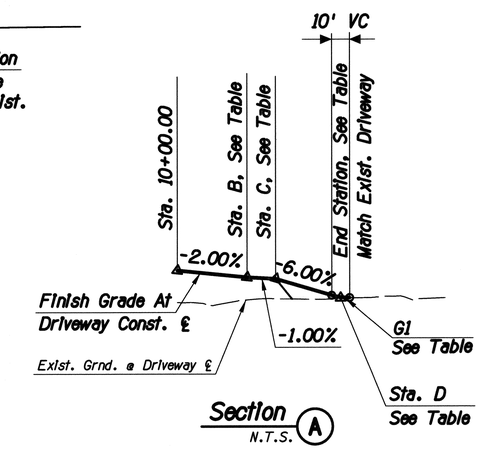

Section (A)
N.T.S.

Station A	W	Station B	Station C	Station D	G1	End Station
Sta. 332+48.70	20'	Sta. 10+39.00	Sta. 10+55.00	Sta. 10+61.00	0.33%	Sta. 10+66.00
Sta. 354+12.19	25'	Sta. 10+34.00	Sta. 10+50.00	Sta. 10+71.00	3.70%	Sta. 10+76.00

DETAIL B
South Driveways

SPECIAL DETAILS

F.H.W.A. REGION	STATE	PROJECT NO.	SHEET NO.	TOTAL SHEETS	AS BUILT
9	ARIZ.	STP-PPM-0(230)A			
		0000 PM PPM SS975 01C			

No.	Revision Description	Engineer	Date

		Date
Designed	EB	03/2014
Drawn	EB, JMF	03/2014
Checked	RDB	03/2014
Proj. Engr.	RDB	03/2014

Priscilla S. Cornelio, P.E., Director

Pima County Department of Transportation

Registered Professional Engineer (Civil) CERTIFICATE NO. 13762 ROBERT DEAN BRITTAIN Date Signed 7-28-14 ARIZONA U.S.A. Expires 3-31-17

HDR Engineering, Inc.
5210 East Williams Circle, Suite 530
Tucson, AZ 85711-4459
(520) 584-3600

VALENCIA ROAD
WADE ROAD TO MARK ROAD
PROJECT NO. 4RTVMW

Scales	Horiz. 1"=NA Vert. 1"=NA	Sheet DT1 of DT55	Page 14 of 281

TRACS No. SS975 01C

Pentable: 152226_PLOTORDR.TBL
Plotdriver: 152226_V8FULL_B&W_PDF.plt

Project ID: 0000000001152226
Client Number: 012145

ProjectWise Directory: Pima_County_Dept_of_Transportation\PCDOT_Valencia_Mtn_Eagle_Mark\13.00_CAD\Construction Documents\Civil\Wade to Mark\17C-01.dgn
Model: 17C0101

Printed By: jefrey Date: 7/21/2014 2:14:22 PM Print Scale: 1:40

F.H.W.A. REGION	STATE	PROJECT NO.	SHEET NO.	TOTAL SHEETS	AS BUILT
9	ARIZ.	STP-PPM-0(230)A			
		0000 PM PPM SS975 01C			

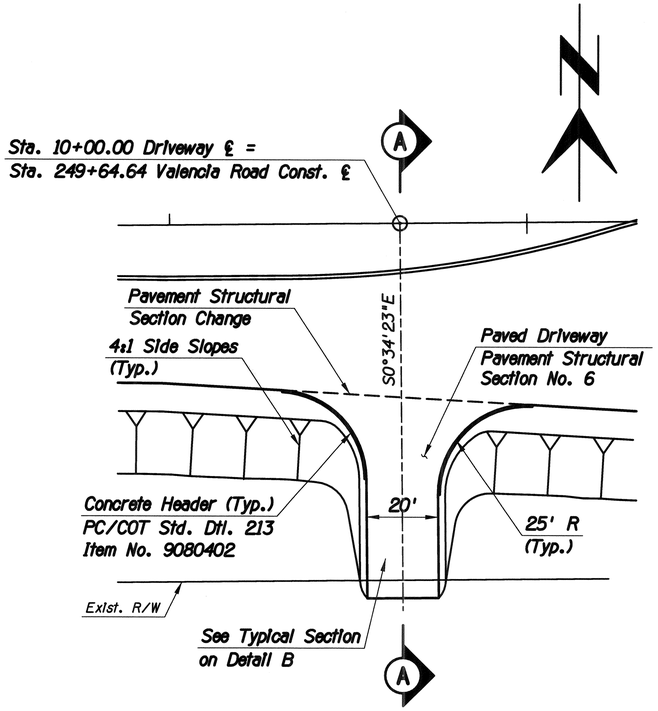

Sta. 249+64.64 Driveway Plan

N.T.S.

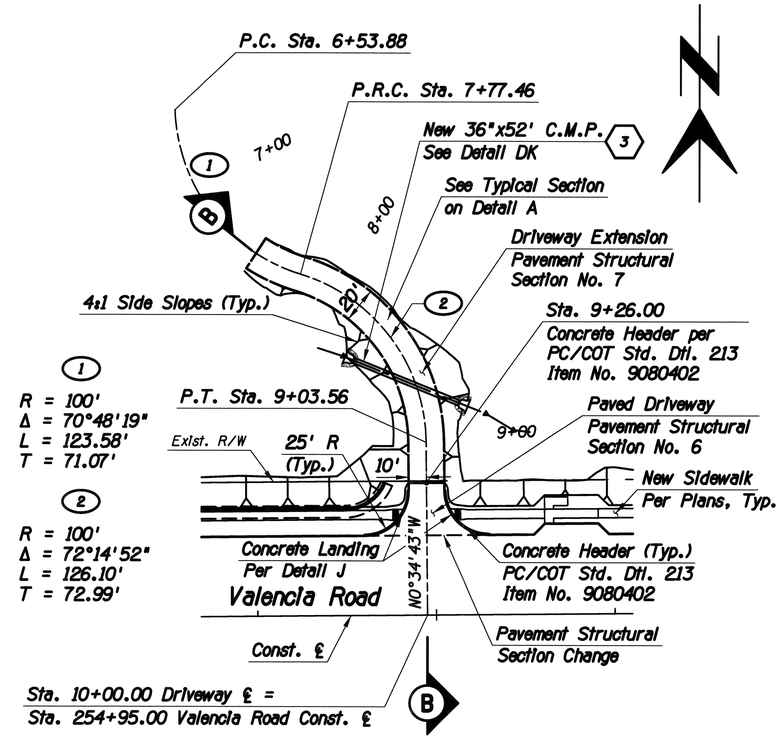

Sta. 254+95 Driveway Plan

N.T.S.

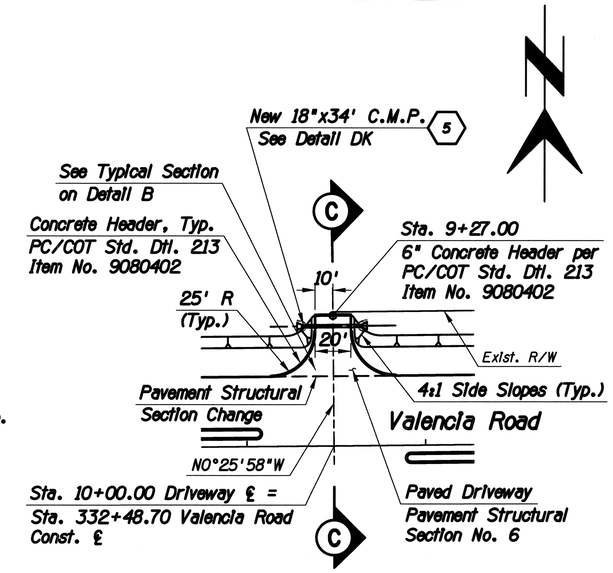

Sta. 332+48.70 Driveway Plan

(Spencer Avenue)

N.T.S.

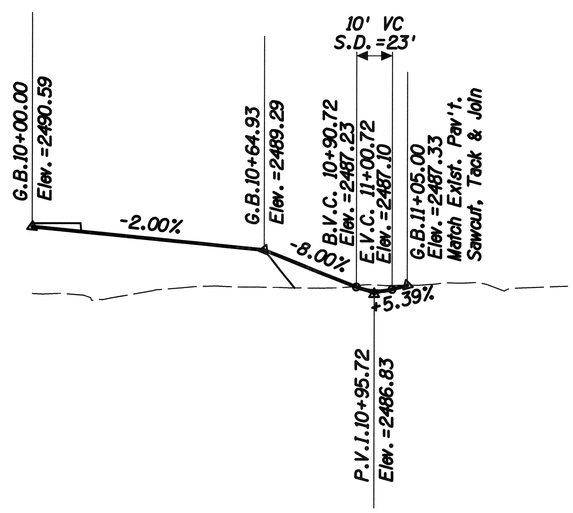

Section A

N.T.S.

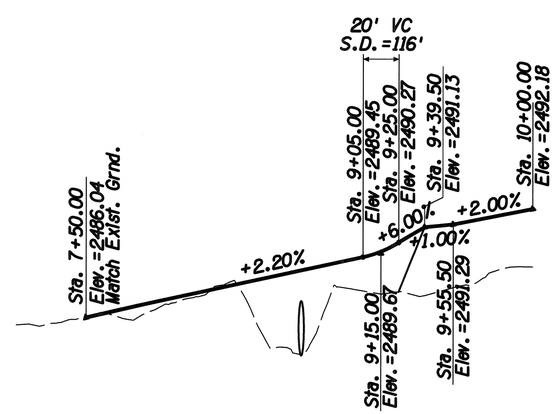

Section B

N.T.S.

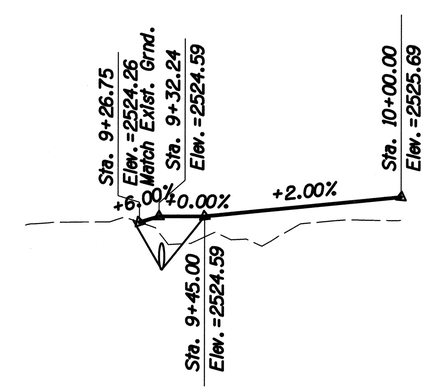

Section C

N.T.S.

DETAIL C

Special Driveways

SPECIAL DETAILS

Scales	Horiz. 1"=NA Vert. 1"=NA	Sheet DT2 of DT55	Page 15 of 281

TRACS No. SS975 01C

Pima County Department of Transportation

Priscilla S. Cornelio, P.E.; Director

Designed	EB	03/2014
Drawn	EB, JMF	03/2014
Checked	RDB	03/2014
Proj. Engr.	RDB	03/2014

No.	Revision Description	Engineer	Date

Registered Professional Engineer (Civil) CERTIFICATE NO. 13762 ROBERT DEAN BRITTAIN Date Signed 7-21-14 ARIZONA U.S.A. Exp. 03 3-31-17

HDR Engineering, Inc. 5210 East Williams Circle, Suite 530 Tucson, AZ 85711-4459 (520) 584-3600

VALENCIA ROAD
WADE ROAD TO MARK ROAD
PROJECT NO. 4RTVMW

Pentable: 152226_PLOTORDR.TBL
Plotdriver: 152226_V8FULL_B&W_PDF.plt

Project ID: 0000000015226
Client Number: 01245

ProjectWise Directory: Pima_County_Dept_of_Transportation\PCDOT_Valencia_Mtn_Eagle_Mark\13.00_CAD\Construction Documents\Civil\Wade to Mark\17C-01.dgn
Model: 17C0102

Printed By: jefrey Date: 7/21/2014 2:14:24 PM Print Scale: 1:40

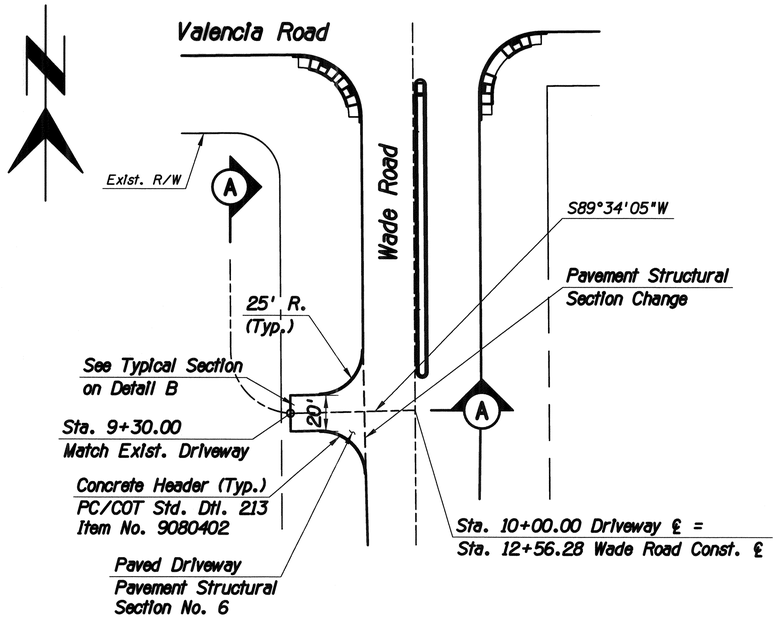

Plan View
N.T.S.

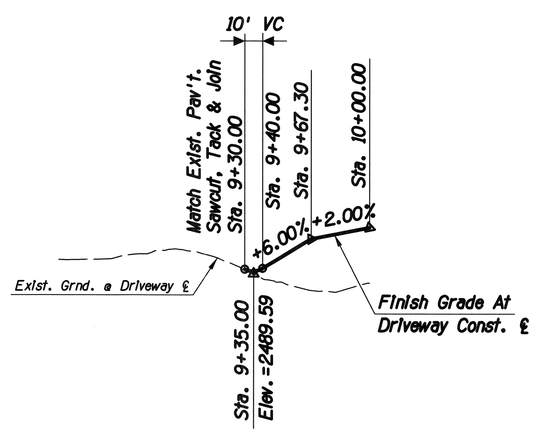

Section (A)
N.T.S.

DETAIL D

Sta. 12+56.28 Wade Road Driveway

F.H.W.A. REGION	STATE	PROJECT NO.	SHEET NO.	TOTAL SHEETS	AS BUILT
9	ARIZ.	STP-PPM-0(230)A			
0000 PM PPM SS975 01C					

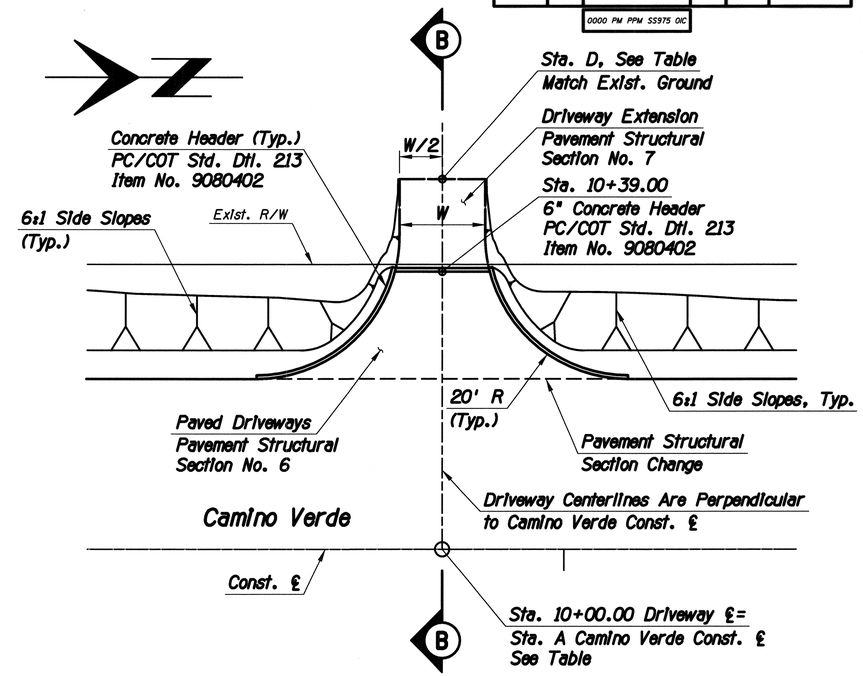

Plan View
N.T.S.

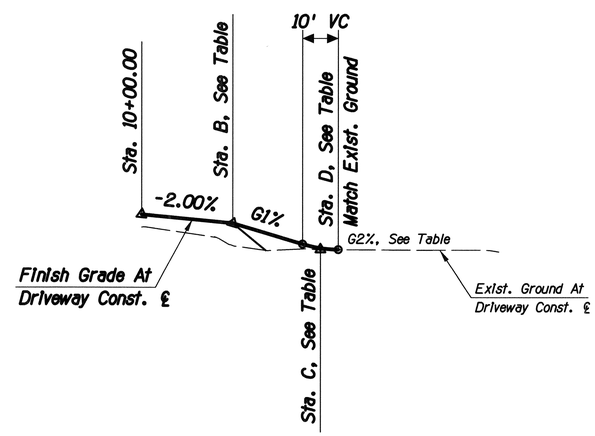

Section (B)
N.T.S.

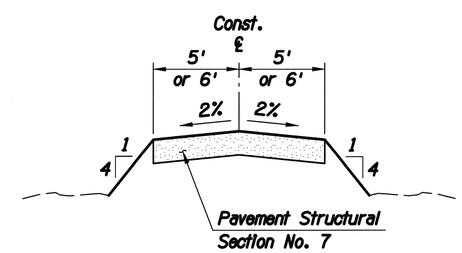

Typical Section
N.T.S.

Station A	Station B	Station C	G1	Station D	G2	W
Sta. 2+32.00	Sta. 10+23.00	Sta. 10+41.00	-10.00%	Sta. 10+46.00	-0.15%	12.00'
Sta. 4+70.00	Sta. 10+25.49	Sta. 10+38.00	-6.00%	Sta. 10+43.00	-0.13%	10.00'
Sta. 5+71.00	Sta. 10+28.00	Sta. 10+41.00	-8.00%	Sta. 10+46.00	1.65%	12.00'
Sta. 7+17.00	Sta. 10+28.00	Sta. 10+47.00	-6.00%	Sta. 10+52.00	-0.68%	12.00'

DETAIL E

Camino Verde Driveways

SPECIAL DETAILS

Priscilla S. Cornello, P.E., Director

Designed	JMF	03/2014
Drawn	JMF	03/2014
Checked	RDB	03/2014
Proj. Engr.	RDB	03/2014

No.	Revision Description	Engineer	Date

Registered Professional Engineer (Civil) CERTIFICATE NO. 13762 ROBERT DEAN BRITTAIN Date Signed 7-21-14 ARIZONA U.S.A. Expires 3-31-17

HDR Engineering, Inc.
5210 East Williams Circle, Suite 530
Tucson, AZ 85711-4459
(520) 584-3600

Pima County Department of Transportation

VALENCIA ROAD
WADE ROAD TO MARK ROAD
PROJECT NO. 4RTVMW

Pentable: 152226_PLOTORDR.TBL
Plotdriver: 152226_V8FULL_B&W_PDF.plt

Project ID: 0000000000152226
Client Number: 012145

Scales	Horiz. 1"=NA	Sheet DT3 of DT55	Page 16 of 281
	Vert. 1"=NA		

F.H.W.A. REGION	STATE	PROJECT NO.	SHEET NO.	TOTAL SHEETS	AS BUILT
9	ARIZ.	STP-PPM-0(230)A			
		0000 PM PPM SS975 01C			

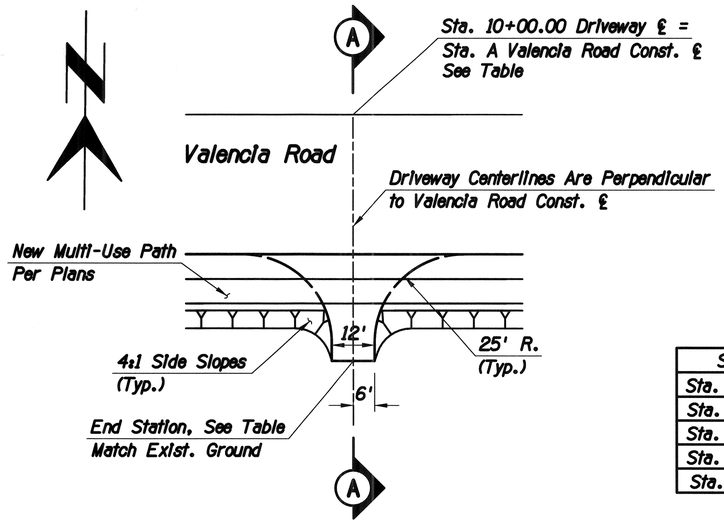

South Drainage Access Driveway Plan View

N.T.S.

Station A	End Station
Sta. 238+10.00	Sta. 10+75
Sta. 254+70.00	Sta. 10+86
Sta. 290+20.00	Sta. 10+78
Sta. 298+50.00	Sta. 10+80
Sta. 311+90.00	Sta. 11+01

Station B	Begin Station
Sta. 277+58.00	Sta. 9+04
Sta. 288+88.00	Sta. 9+07
Sta. 308+90.00	Sta. 8+96

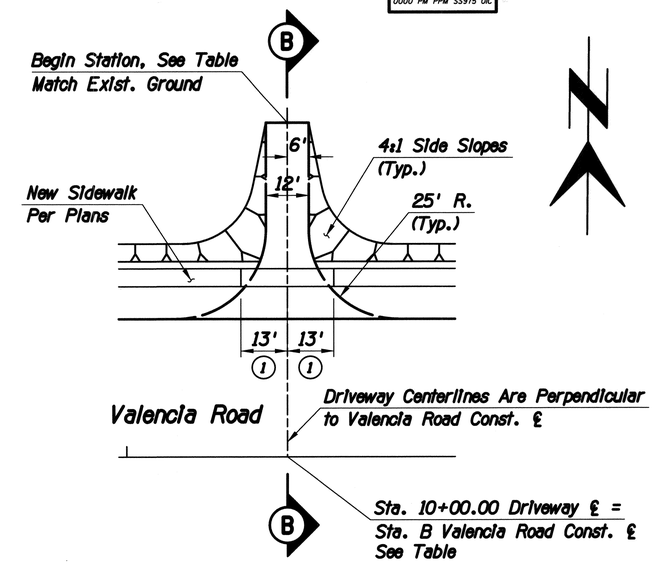

North Driveway Access Plan View

N.T.S.

Notes:

1. Sidewalk shall be 6" thick where access driveways cross the sidewalk.
2. For Driveway at Sta. 254+70, Sta.=10+44.50.
3. For Driveway at Sta. 254+70, Sta.=10+60.50.
4. For Driveways at multi-use path locations, Grade is -1.00%. For all other Driveways, Grade is -2.00%.
5. For Driveways at sidewalk locations, Grade is +1.00%. For all other Driveways, Grade is +2.00%.

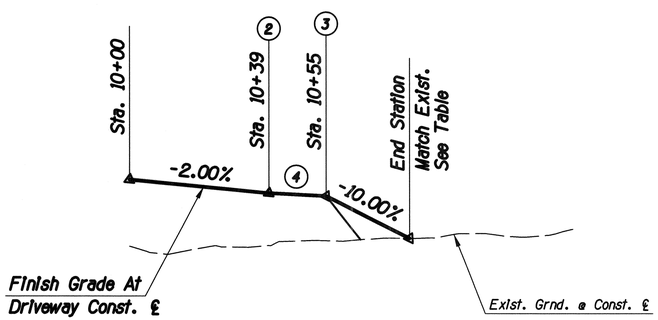

Section A

N.T.S.

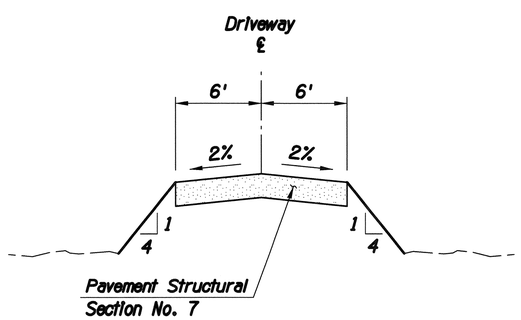

Typical Section

N.T.S.

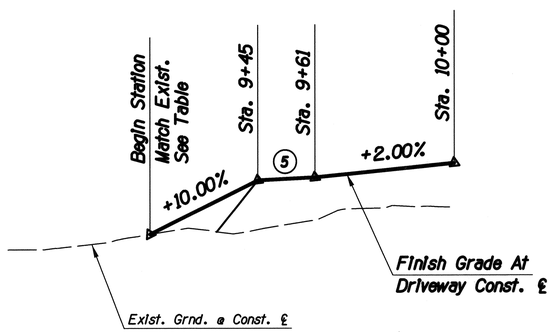

Section B

N.T.S.

DETAIL F1

Drainage Access Driveways

SPECIAL DETAILS

Scales	Horiz. 1"=NA	Sheet DT4 of DT55	Page 17 of 281
	Vert. 1"=NA		

TRACS No. SS975 01C

No.	Revision Description	Engineer	Date

			Date
Designed	JMF		03/2014
Drawn	JMF		03/2014
Checked	RDB		03/2014
Proj. Engr.	RDB		03/2014

Priscilla S. Cornelio, P.E., Director

Pima County Department of Transportation

Registered Professional Engineer (Civil) CERTIFICATE NO. 13762 ROBERT DEAN BRITTAIN Date Signed 7-21-14 ARIZONA U.S.A.

Expires 3-31-17

HDR Engineering, Inc.
5210 E. Williams Circle, Suite 530
Tucson, AZ 85711-4459
(520) 584-3600

VALENCIA ROAD
WADE ROAD TO MARK ROAD
PROJECT NO. 4RTVMW

Project ID: 0000000015226
Client Number: 012145

Pentable: 152226_PLOTORDR.TBL
Plotdriver: 152226_V8FULL_B&W_PDF.plt

ProjectWise Directory: Pima_County_Dept_of_Transportation\PCDOT_Valencia_Mtn_Eagle_Mark\13.00_CAD\Construction Documents\Civil\Wade to Mark\17C-01.dgn
Model: 17C0104a

Printed By: jefrey Date: 7/21/2014 2:14:28 PM

Print Scale: 1:20

F.H.W.A. REGION	STATE	PROJECT NO.	SHEET NO.	TOTAL SHEETS	AS BUILT
9	ARIZ.	STP-PPM-0(230)A			
		0000 PM PPM SS975 01C			

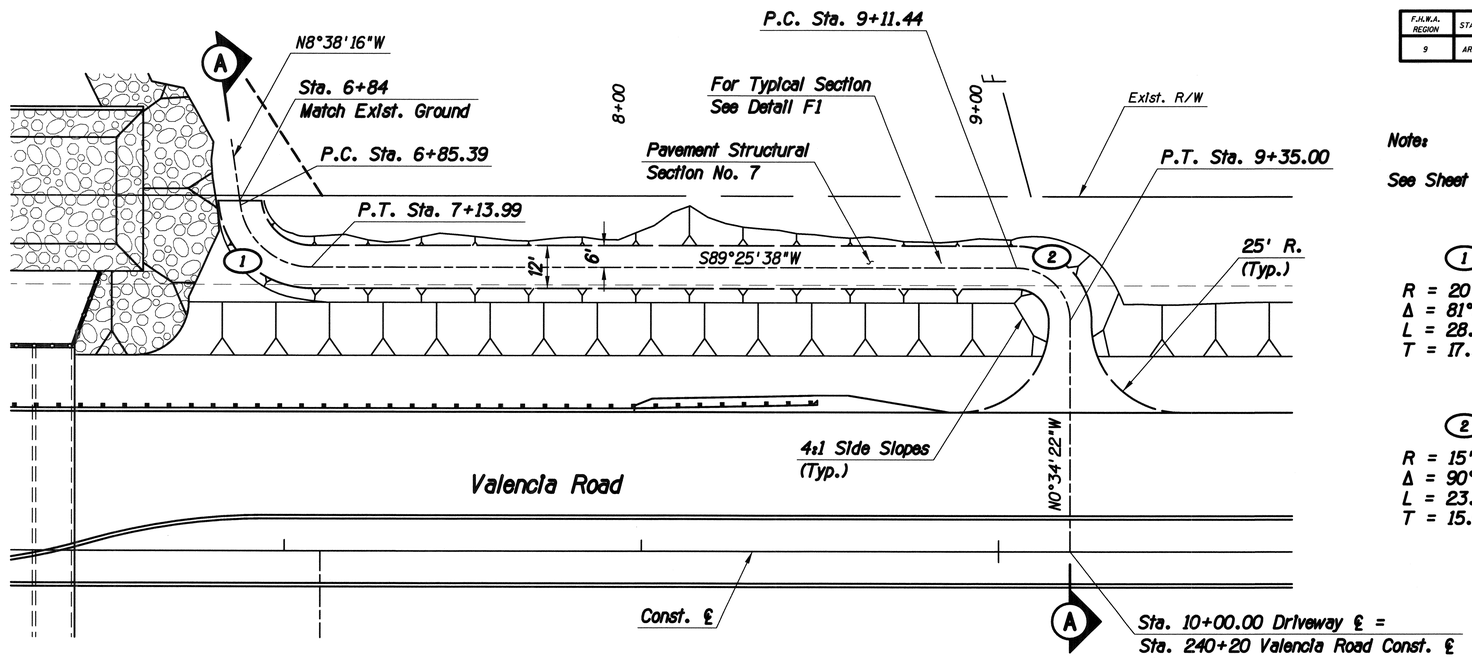

Sta. 240+20 Drainage Access Driveway
Plan View
N.T.S.

Note:

See Sheet DT4 for Typical Section Detail.

(1)
R = 20'
Δ = 81°56'06"
L = 28.60'
T = 17.37'

(2)
R = 15'
Δ = 90°00'00"
L = 23.56'
T = 15.00'

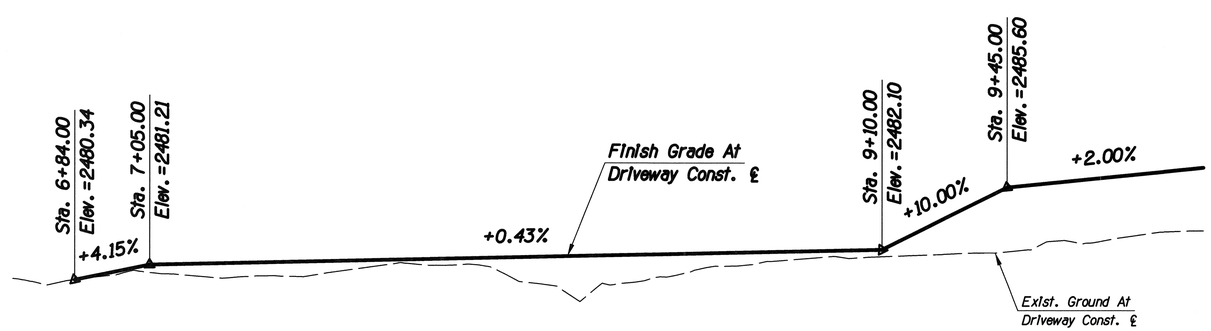

Section (A)
N.T.S.

DETAIL F2

Sta. 240+20 Drainage Access Driveway Detail

SPECIAL DETAILS

No.	Revision Description	Engineer	Date

		Date
Designed	JMF	03/2014
Drawn	JMF	03/2014
Checked	RDB	03/2014
Proj. Engr.	RDB	03/2014

Priscilla S. Cornelio, P.E., Director

Pima County Department of Transportation

REGISTERED PROFESSIONAL ENGINEER (CIVIL) CERTIFICATE NO. 13762 ROBERT DEAN BRITTAIN Date Signed 7-21-14 ARIZONA U.S.A. Expires 3-31-17

HDR Engineering, Inc.
4120 East Wilshire Circle, Suite 530
Tucson, AZ 85711-4459
(520) 584-3600

VALENCIA ROAD
WADE ROAD TO MARK ROAD
PROJECT NO. 4RTVMW

Scales	Horiz. 1"=NA	Sheet DT5 of DT55	Page 18 of 281
	Vert. 1"=NA		

TRACS No. SS975 01C

Pentable: 152226_PLOTORDR.TBL
Plotdriver: 152226_V8FULL_B&W_PDF.plt

Project ID: 0000000000152226
Client Number: 012145

ProjectWise Directory: Pima_County_Dept_of_Transportation\PCDOT_Valencia_Mtn_Eagle_Mark\13.00_CAD\Construction Documents\Civil\Wade to Mark\17C-01.dgn
Model: 17C0104b

Printed By: jefrey Date: 7/21/2014 2:14:30 PM

Print Scale: 1:20

F.H.W.A. REGION	STATE	PROJECT NO.	SHEET NO.	TOTAL SHEETS	AS BUILT
9	ARIZ.	STP-PPM-012301A			
		0000 PM PPM SS975 01C			

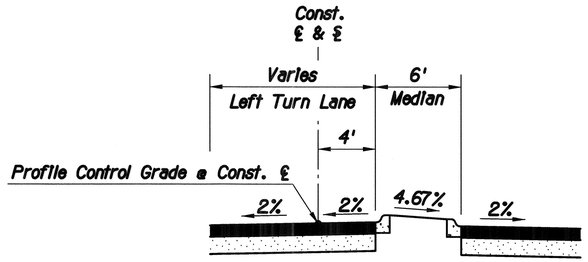

VALENCIA ROAD
Single Left Turn Bay Section Detail

Note:
The other side of the intersection is a mirror image.

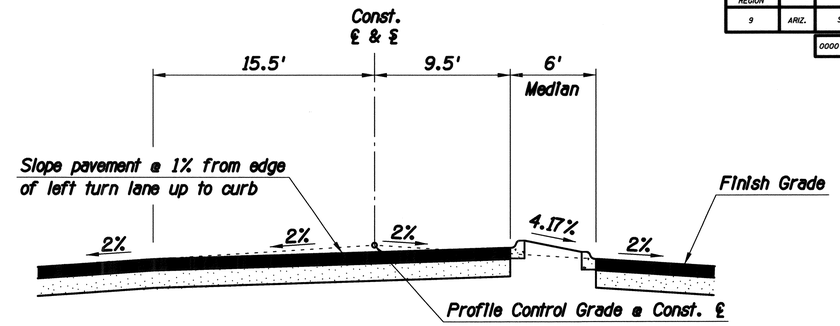

VALENCIA ROAD
Double Left Turn Bay Section Detail

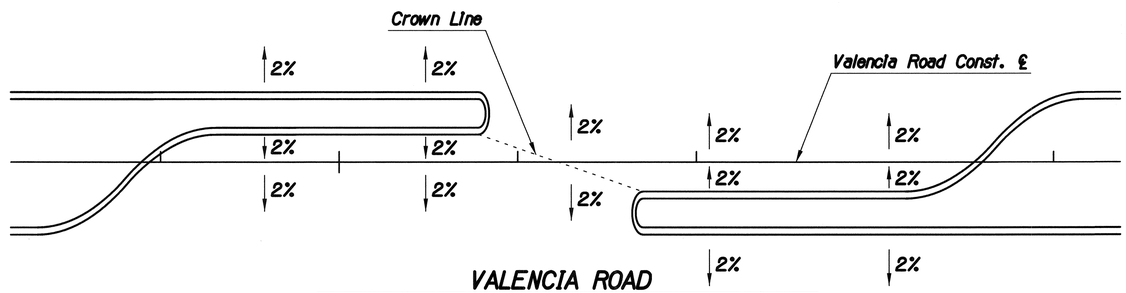

VALENCIA ROAD
Single Left Turn Bay Crown Detail

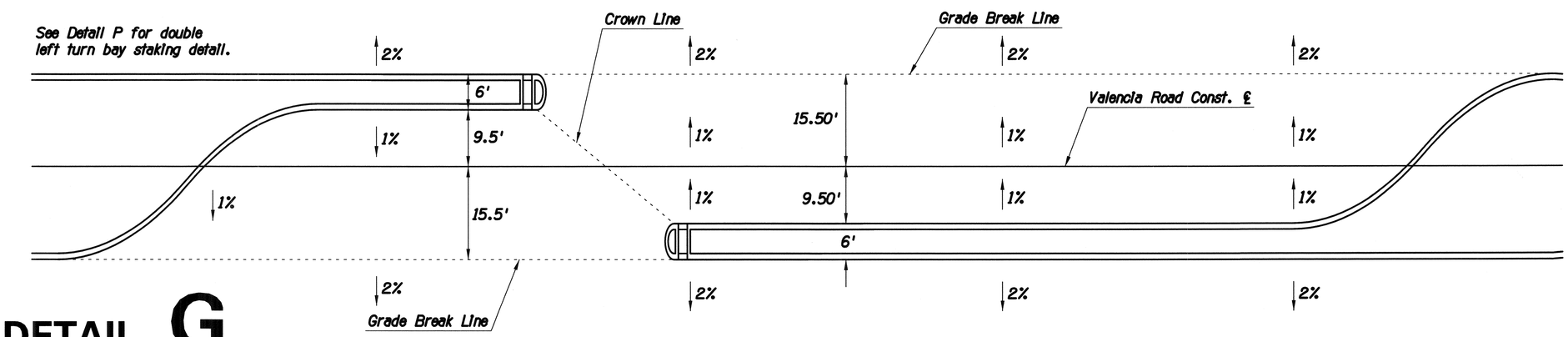

DETAIL G
Left Turn Bay Opening Detail

VALENCIA ROAD
Double Left Turn Bay Crown Detail

SPECIAL DETAILS

Scales	Horiz. 1"=NA Vert. 1"=NA	Sheet DT6 of DT55	Page 19 of 281

Print Scale: 1:40

TRACS No. SS975 01C

Pima County Department of Transportation

Priscilla S. Cornelio, P.E., Director

No.	Revision Description	Engineer	Date

		Date
Designed	JMF	03/2014
Drawn	JMF	03/2014
Checked	RDB	03/2014
Proj. Engr.	RDB	03/2014

Registered Professional Engineer (Civil)
CERTIFICATE NO. 13762
ROBERT DEAN BRITTAIN
Date Signed 7-21-14
ARIZONA U.S.A.
Expires 3-31-17

HDR Engineering, Inc.
4220 East Illinois Circle, Suite 530
Tucson, AZ 85711-4459
(520) 584-3600

VALENCIA ROAD
WADE ROAD TO MARK ROAD
PROJECT NO. 4RTVMW

Pentable: 152226_PLOTDRDR.TBL
Plotdriver: 152226_V8FULL_B&W_PDF.plt

Project ID: 0000000000152226
Client Number: 012145

ProjectWise Directory: Pima_County_Dept_of_Transportation\PCDOT_Valencia_Mtn_Eagle_Mark\13.00_CAD\Construction Documents\Civil\Wade to Mark\17C-01.dgn
Model: 17C0105

Printed By: jefrey Date: 7/21/2014 2:14:32 PM

F.H.W.A. REGION	STATE	PROJECT NO.	SHEET NO.	TOTAL SHEETS	AS BUILT
9	ARIZ.	STP-PPM-0(230)A			
		0000 PM PPM SS975 01C			

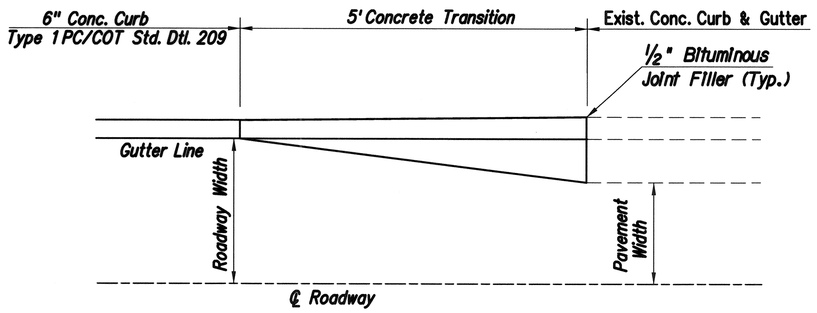

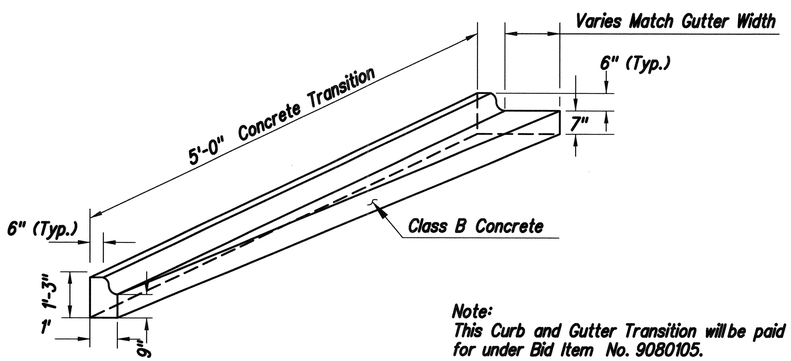

Note:
This Curb and Gutter Transition will be paid for under Bid Item No. 9080105.

Curb and Gutter Transition
N.T.S.

DETAIL H

Curb & Gutter Transition

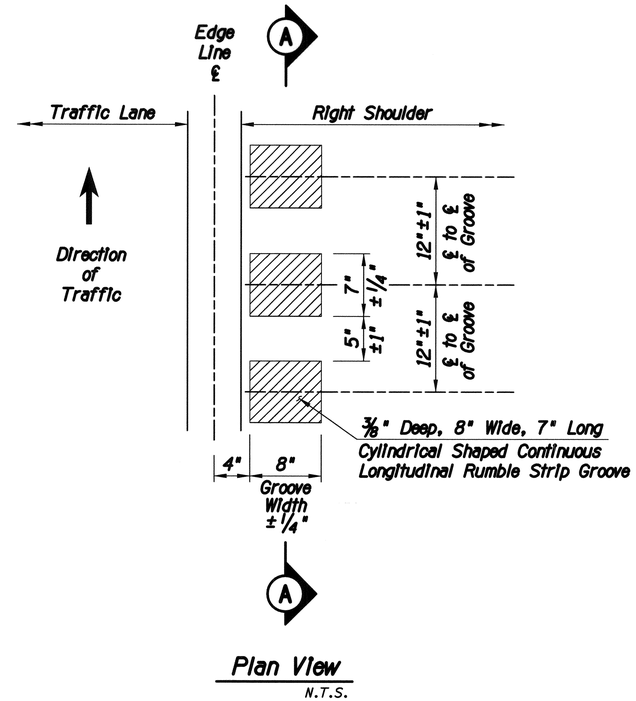

Plan View
N.T.S.

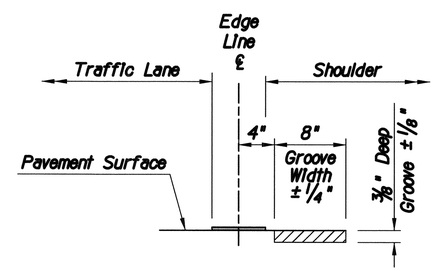

Typical Longitudinal Rumble Strip Location
8" Wide Strip With Offset
Profile View
N.T.S.

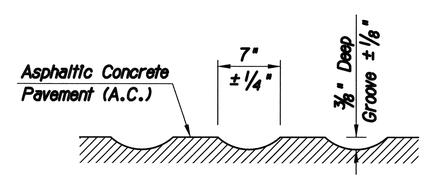

Section A
N.T.S.

General Notes:

1. The longitudinal rumble strip groove and pattern shall be constructed by milling or grinding the indentations in the asphaltic concrete pavement.
2. The grinding machine shall be equipped with an acceptable guide that allows the strip to be installed to the proper alignment within acceptable tolerances.
3. To ensure proper rumble strip location, a temporary paint edge line shall be installed at the permanent location prior to the installation of the ground-in rumble strip. The rumble strip shall follow the location of the edge line.
4. The radius and configuration of the cutting/milling drum and machine shall be able to produce a smooth and consistent groove to the requirements of these specifications.
5. Longitudinal rumble strips shall not be placed on construction joints.
6. Rumble strips shall be omitted across intersections, driveways and along the right turn lanes.
7. This work will be paid for under Bid Item No. 9280036.

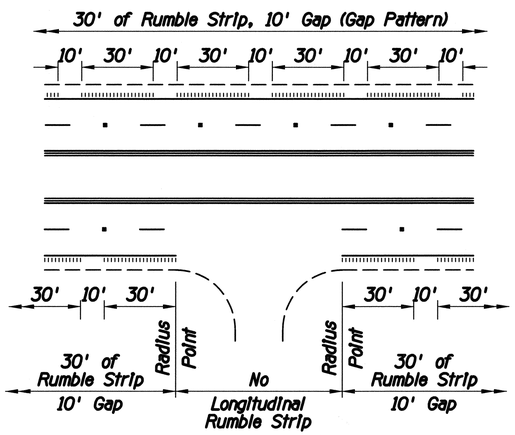

Typical Installation
N.T.S.

DETAIL I

Rumble Strips

SPECIAL DETAILS

No.	Revision Description	Date	Designed	JMF	03/2014
			Drawn	JMF	03/2014
			Checked	RDB	03/2014
			Proj. Engr.	RDB	03/2014

Engineer

Pima County Department of Transportation
Priscilla S. Cornelio, P.E., Director

Registered Professional Engineer (Civil)
CERTIFICATE NO. 13762
ROBERT DEAN BRITTAIN
Date Signed 9-21-13
ARIZONA U.S.A.
Expires 3-31-17

HDR Engineering, Inc.
5210 East Williams Circle, Suite 530
Tucson, AZ 85711-4459
(520) 584-3600

VALENCIA ROAD
WADE ROAD TO MARK ROAD
PROJECT NO. 4RTVMW

Scales	Horiz. 1"=NA Vert. 1"=NA	Sheet DT7 of DT55	Page 20 of 281

TRACS No. SS975 01C

Pentable: 152226_PLOTORDR.TBL
Plotdriver: 152226_V8FULL_B&W_PDF.plt
Project ID: 0000000001152226
Client Number: 012145

ProjectWise Directory: Pima_County_Dept_of_Transportation\PCDOT_Valencia_Mtn_Eagle_Mark\13.00_CAD\Construction Documents\Civil\Wade to Mark\17C-01.dgn
Model: 17C0106
Printed By: jefrey Date: 7/21/2014 2:14:34 PM
Print Scale: 1:10

F.H.W.A. REGION	STATE	PROJECT NO.	SHEET NO.	TOTAL SHEETS	AS BUILT
9	ARIZ.	STP-PPM-0(230)A			
		0000 PM PPM SS975 01C			

1. Concrete Landing Control Point. See Detail R for location.
2. Detectable Warning Strip 6'x2' (Typ.). See PC/COT Std. Detail 207, Sht. 8 of 8. (See Table at right for location.)
3. Rough broom finish. Use ripple pattern (Typ.).
4. Concrete header.

Ramp Locations Where Detectable Warning Strip Shall Be Installed

Driveway @ 254+95
South Arrow Road
Camino Rancho
Driveway @ 356+24

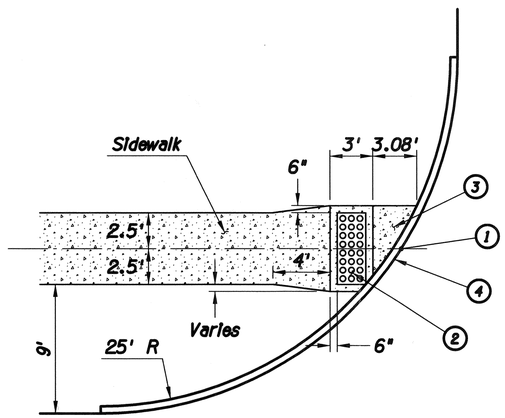

Plan
N.T.S.

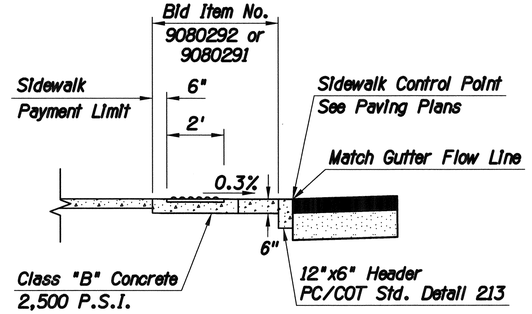

Profile
N.T.S.

General Notes:

1. See PC/COT Std. Detail 207, Sht. 6 of 6 for additional construction notes.
2. See Std. Detail 200 for Joint Requirements.
3. See Project Plans for concrete landing location. Concrete landing should be oriented to align with the crosswalk or stop bar, median refuge area, and with the opposite landing in the direction of pedestrian travel.
4. This ramp will be paid for under Item No. 9080292 if the ramp includes the detectable warning strip and Item No. 9080291 if the detectable warning strip is omitted.

DETAIL J

Sidewalk Access Ramp

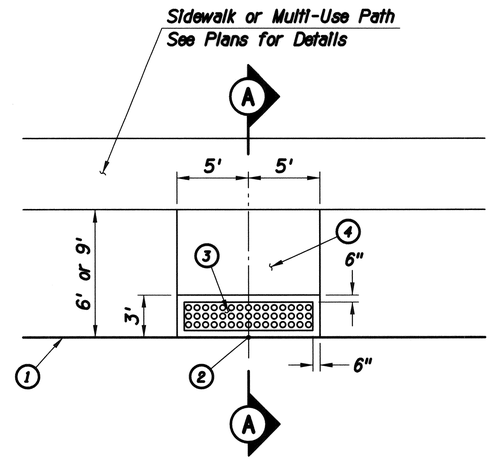

Concrete or Asphalt Landing Strip
N.T.S.

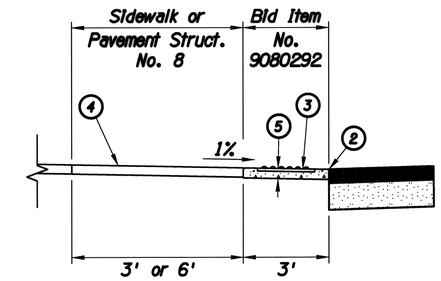

Section A
N.T.S.

1. Edge of Pavement.
2. Sidewalk or Multi-Use Path Control Point. See plans for location and details.
3. Detectable Warning Strip. See PC/COT Std. Detail 207, Sht. 8 of 8.
4. Concrete or Asphalt Landing Pad. See plans for details. (Not applicable at East Casino Entrance)
5. Rough broom finish. Use ripple pattern (Typ.).

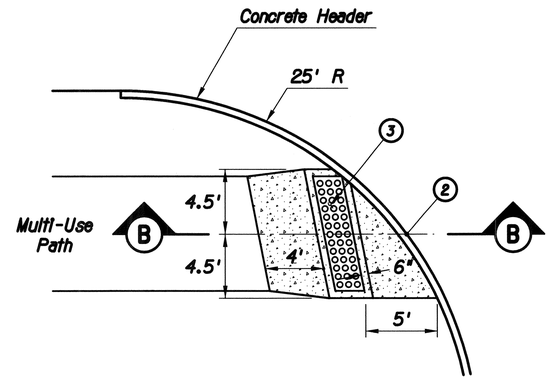

Sta. 332+33.79
N.T.S.

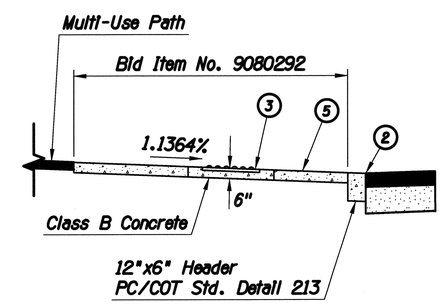

Section B
N.T.S.

Note:

The detectable warning strip in concrete will be paid for under Item No. 9080292.

DETAIL K

Detectable Warning Strips

SPECIAL DETAILS

Pima County Department of Transportation

Priscilla S. Cornelio, P.E., Director

No.	Revision Description	Engineer	Date

		Date
Designed	JMF	03/2014
Drawn	BJP, JMF	03/2014
Checked	RDB	03/2014
Proj. Engr.	RDB	03/2014

Registered Professional Engineer (Civil) CERTIFICATE NO. 13762 ROBERT DEAN BRITTAIN Date Signed 7-21-14 ARIZONA U.S.A. Expires 3-31-17

HDR Engineering, Inc.
4120 E. Fort Lowell Road, Suite 530
Tucson, AZ 85711-4459
(520) 584-3600

VALENCIA ROAD
WADE ROAD TO MARK ROAD
PROJECT NO. 4RTVMW

Scales	Horiz. 1"=NA	Sheet DT8 of DT55	Page 21 of 281
	Vert. 1"=NA		

TRACS No. SS975 01C

Print Scale: 1:5

Pentable: 152226_PLOTORDR.TBL
Plotdriver: 152226_V8FULL_B&W_PDF.plt

Project ID: 0000000015226
Client Number: 012145

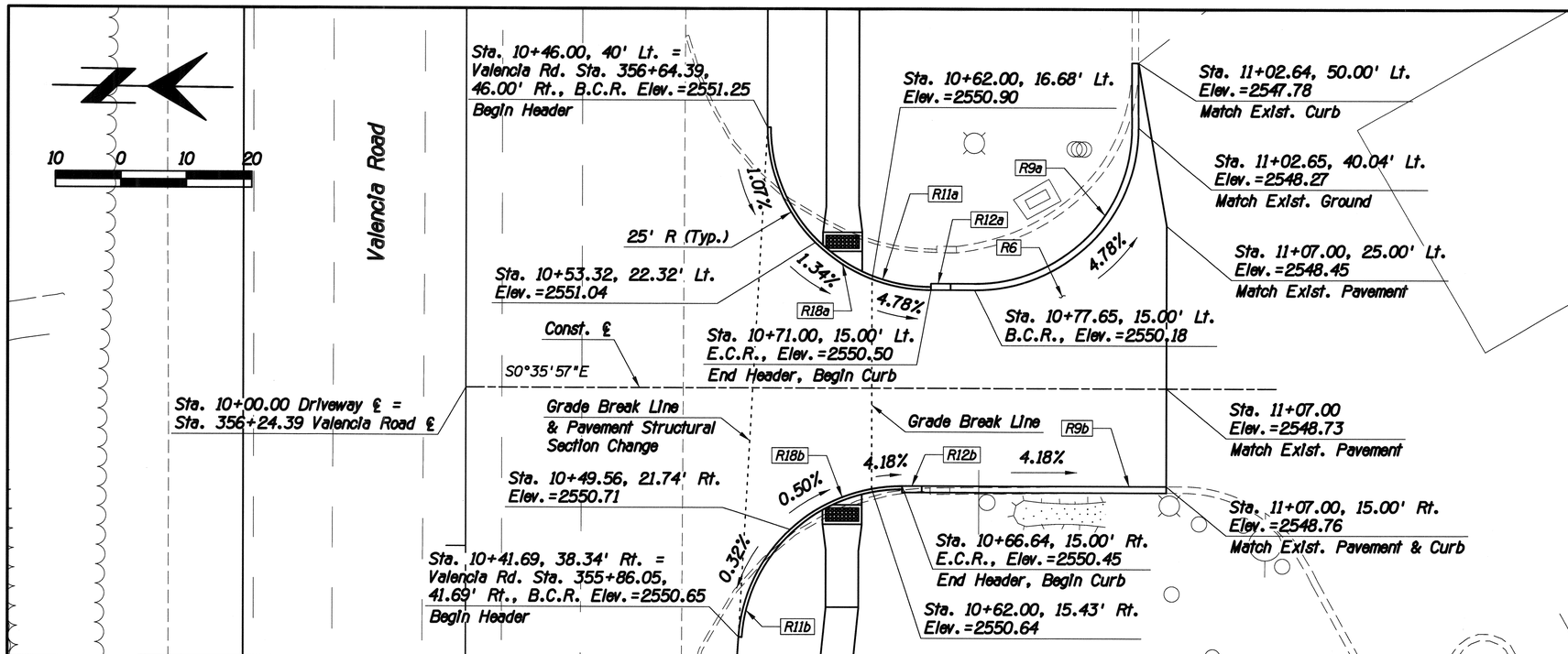

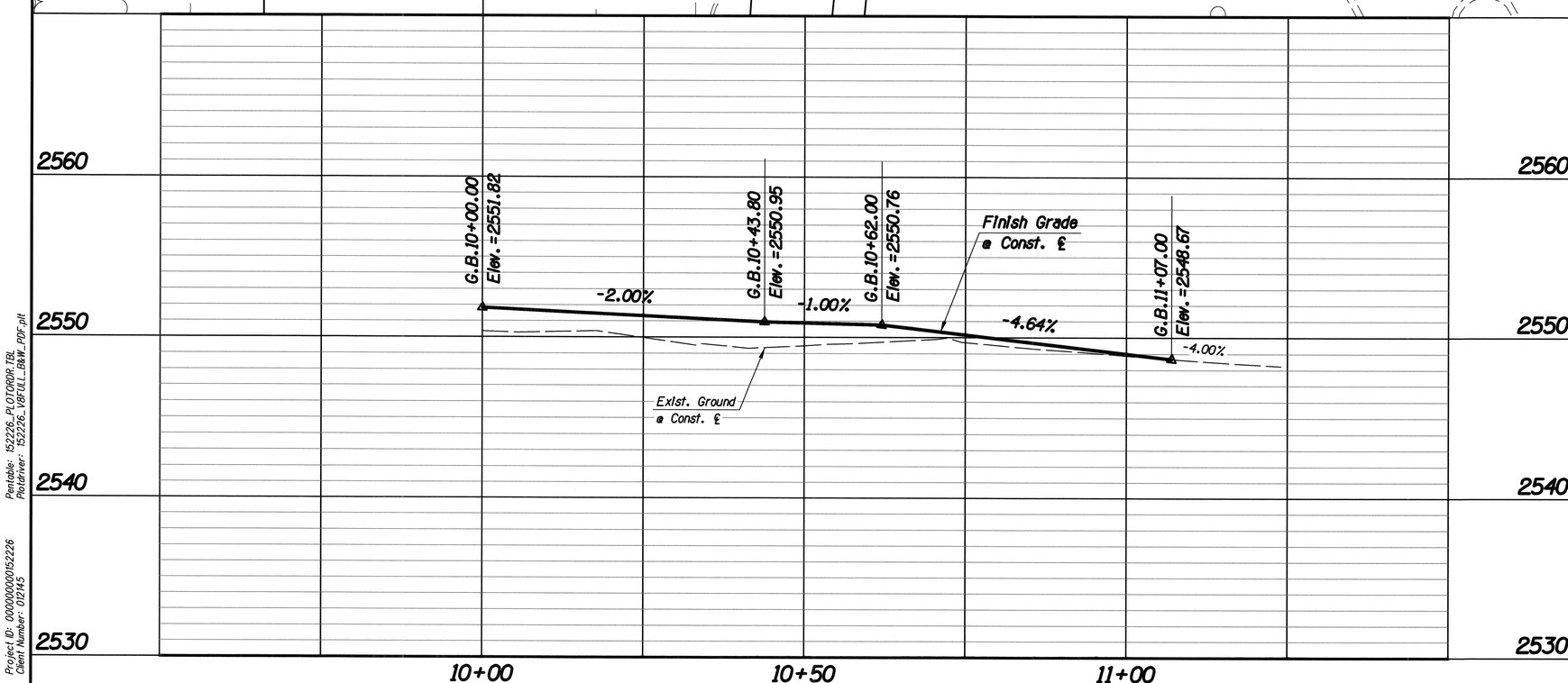

F.H.W.A. REGION	STATE	PROJECT NO.	SHEET NO.	TOTAL SHEETS	AS BUILT
9	ARIZ.	STP-PPM-0123(01A)			
		0000 PM PPM SS975 01C			

Item No.	Qty.	Unit	Description
R6	266	S.Y.	Pav't Struct. Sec. No. 6
R9	90	L.F.	Vertical Curb, Type 1 PC Std. Dtl. 209, H=6"
a	53	L.F.	Sta. 10+74.00, 15.00' Lt. to Sta. 11+02.64, 50.00' Lt.
b	37	L.F.	Sta. 10+69.64, 15.00' Rt. to Sta. 11+07.00, 15.00' Rt.
R11	77	L.F.	Concrete Header PC/COT Std. Dtl. 213
a	39	L.F.	Sta. 10+46.00, 40.00' Lt. to Sta. 10+71.00, 15.00' Lt.
b	38	L.F.	Sta. 10+41.69, 38.34' Rt. to Sta. 10+66.64, 15.00' Rt.
R12	2	Each	Curb Terminal Section PC/COT Std. Dtl. 212
a	1	Each	Sta. 10+71.00, 15.00' Lt. to Sta. 10+74.00, 15.00' Lt.
b	1	Each	Sta. 10+66.64, 15.00' Rt. to Sta. 10+69.64, 15.00' Rt.
R18	2	Each	Sidewalk Access Ramp Detail J
a	1	Each	Sta. 10+57.50, 18.96' Lt.
b	1	Each	Sta. 10+57.50, 16.73' Rt.

DETAIL L

Staking Plan

SPECIAL DETAILS

Scales	Horiz. 1"=10' Vert. 1"=4'	Sheet DT9 of DT55	Page 22 of 281

Print Scale: 1:10

TRACS No. SS975 01C

No.	Revision Description	Engineer	Date

		Date
Designed	JMF	03/2014
Drawn	JMF	03/2014
Checked	RDB	03/2014
Proj. Engr.	RDB	03/2014

Priscilla S. Cornelio, P.E., Director

Pima County Department of Transportation

Registered Professional Engineer (Civil) CERTIFICATE NO. 13762 ROBERT DEAN BRITTAIN Date Signed 7-21-14 ARIZONA U.S.A.
Expires 3-31-17

HDR Engineering, Inc. 5210 East Williams Circle, Suite 530 Tucson, AZ 85711-4459 (520) 584-3600

VALENCIA ROAD
WADE ROAD TO MARK ROAD
PROJECT NO. 4RTVMW

Pentable: 152226_PLOTORDR.TBL
Plotdriver: 152226_VBFULL_B&W_PDF.plt

Project ID: 0000000015222 6
Client Number: 012145

ProjectWise Directory: Pima_County_Dept_of_Transportation\PCDOT_Valencia_Mtn_Eagle_Mark\13.00_CAD\Construction Documents\Civil\Wade to Mark\17C-01.dgn
Model: 17C0108

Printed By: jefrey Date: 7/21/2014 2:14:38 PM

F.H.W.A. REGION	STATE	PROJECT NO.	SHEET NO.	TOTAL SHEETS	AS BUILT
9	ARIZ.	STP-PPM-0(230)A			
		0000 PM PPM SS975 01C			

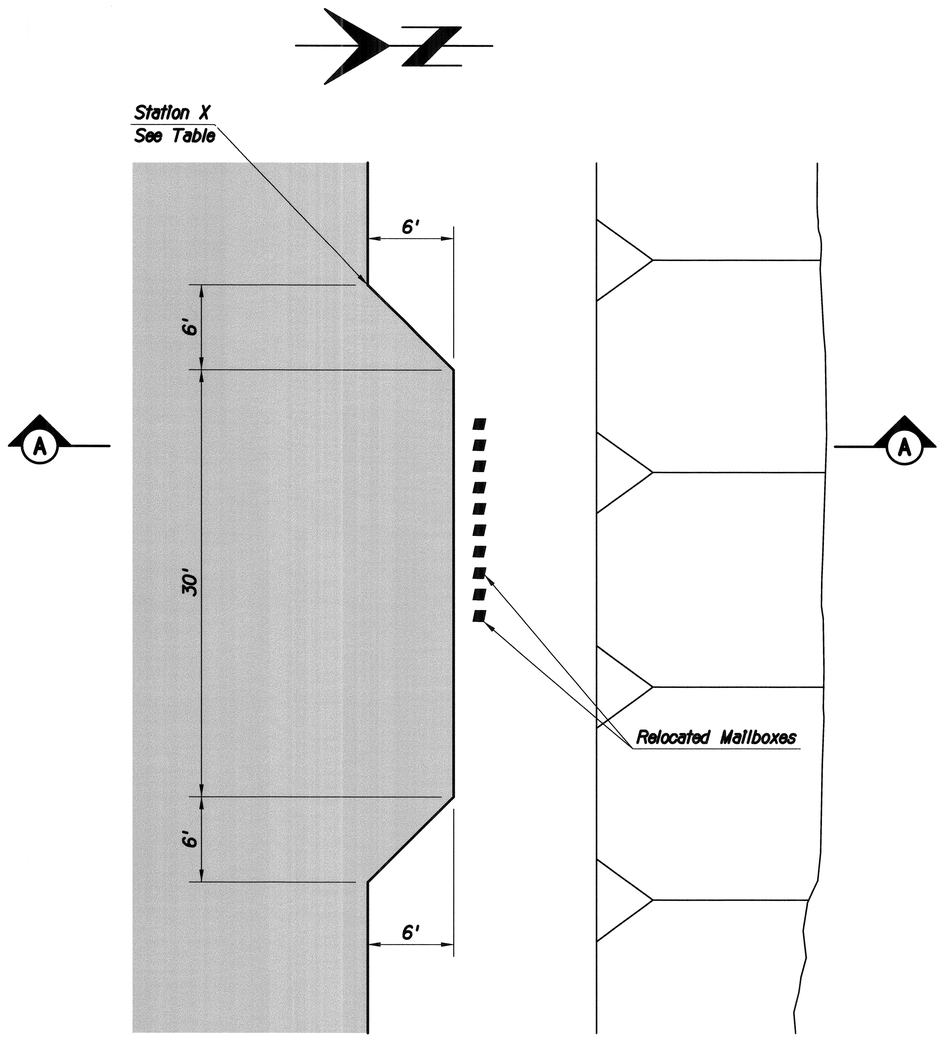

Plan
N.T.S.

Side Street	Station X	Offset
Mardick Ave.	293+78	39' Lt.
Viviana Rd.	306+65	39' Lt.

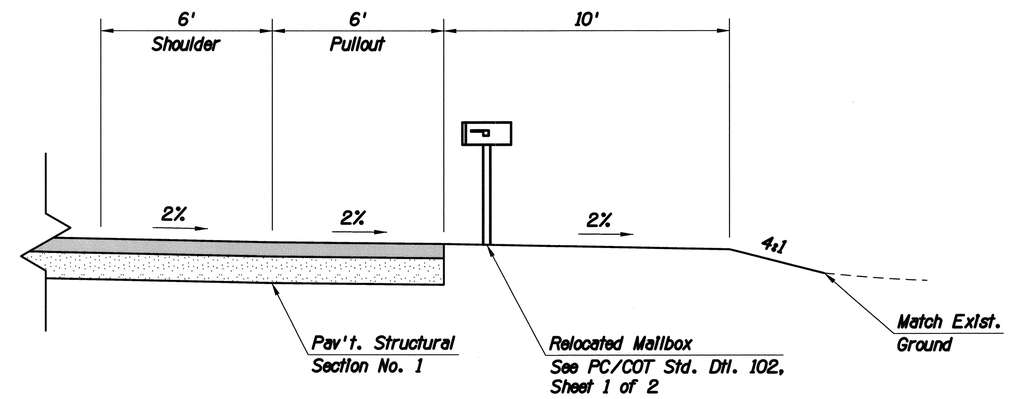

Section A
N.T.S.

Note:

Relocating the mailboxes will be paid for under Item 2020061.

DETAIL M

Mailbox Pullout

SPECIAL DETAILS

Scales	Horiz. 1"=NA	Sheet DT10 of DT55	Page 23 of 281
	Vert. 1"=NA		

TRACS No. SS975 01C

Pima County Department of Transportation

Priscilla S. Cornelio, P.E., Director

No.	Revision Description	Engineer	Date

		Date
Designed	JMF	03/2014
Drawn	BJP, JMF	03/2014
Checked	RDB	03/2014
Proj. Engr.	RDB	03/2014

Registered Professional Engineer (Civil)
CERTIFICATE NO. 13762
ROBERT DEAN BRITTAIN
Date Signed 7-21-14
ARIZONA U.S.A.
Expires 3-31-17

HDR Engineering, Inc.
4120 E. Williams Circle, Suite 530
Tucson, AZ 85711-4459
(520) 584-3500

VALENCIA ROAD
WADE ROAD TO MARK ROAD
PROJECT NO. 4RTVMW

Pentable: 152226_PLOTORDR.TBL
Plotdriver: 152226_V8FULL_B&W_PDF.plt

Project ID: 0000000000152226
Client Number: 012145

ProjectWise Directory: Pima_County_Dept_of_Transportation\PCDOT_Valencia_Mtn_Eagle_Mark\13.00_CAD\Construction Documents\Civil\Wade to Mark\17C-01.dgn
Model: 17C0109

Printed By: jefrey Date: 7/21/2014 2:14:41 PM

Print Scale: 1:5

F.H.W.A. REGION	STATE	PROJECT NO.	SHEET NO.	TOTAL SHEETS	AS BUILT
9	ARIZ.	STP-PPM-0(230)A			
		0000 PM PPM SS975 01C			

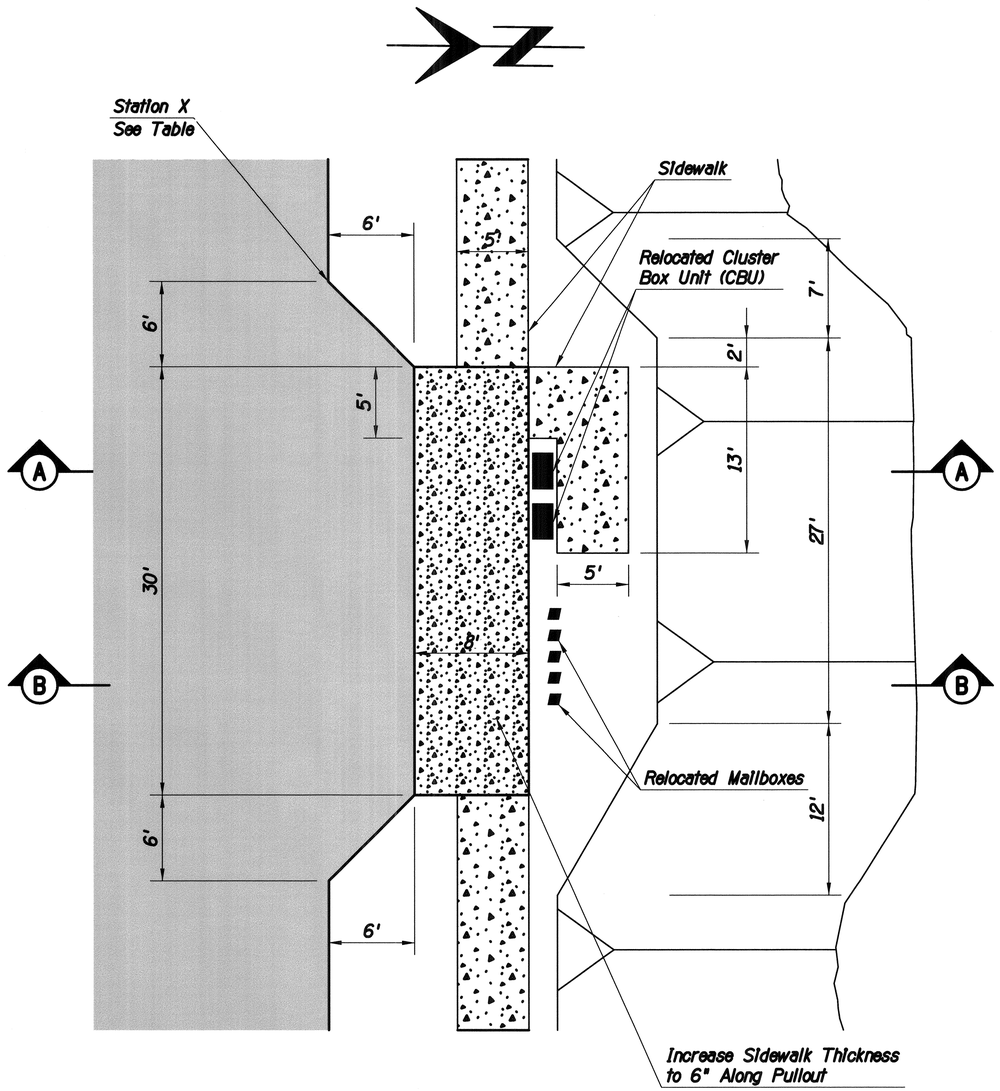

Plan
N.T.S.

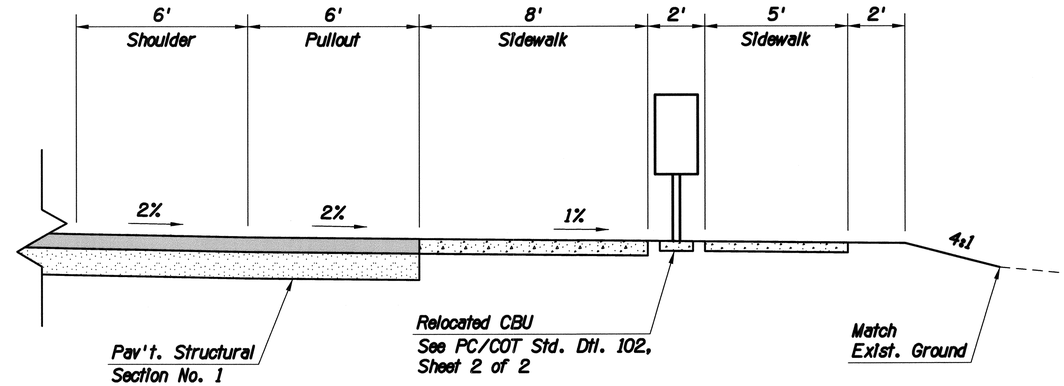

Section A
N.T.S.

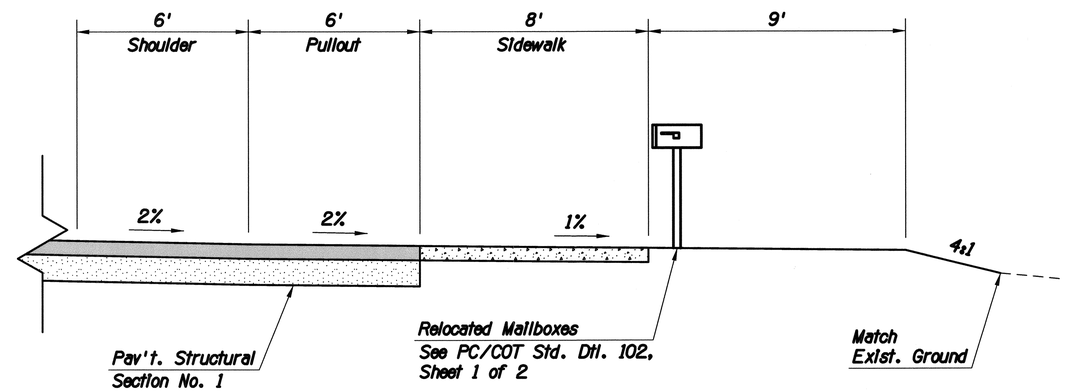

Section B
N.T.S.

Side Street	Station X	Offset
Wade Rd.	255+55	44.5' Lt.
South Arrow	266+84	39' Lt.

Notes:

1. Relocating the mailboxes will be paid for under Item 2020061.
2. Relocating the CBU's will be paid for under Item 2020062.

DETAIL N

Mailbox Pullout

SPECIAL DETAILS

Scales	Horiz. 1" = NA	Sheet DT11 of DT55	Page 24 of 281
	Vert. 1" = NA		

TRACS No. SS975 01C

Pima County Department of Transportation

Priscilla S. Cornelio, P.E., Director

No.	Revision Description	Engineer	Date

		Date
Designed	ABL	03/2014
Drawn	ABL	03/2014
Checked	RDB	03/2014
Proj. Engr.	RDB	03/2014

Registered Professional Engineer (Civil)
CERTIFICATE NO. 13762
ROBERT DEAN BRITTAIN
Date Signed 4-8-14
ARIZONA U.S.A.
Expires 3-31-17

HDR Engineering, Inc.
5120 E. Williams Circle, Suite 530
Tucson, AZ 85711-4459
(520) 584-3600

VALENCIA ROAD
WADE ROAD TO MARK ROAD
PROJECT NO. 4RTVMW

Pentable: 152226_PLOTORDR.TBL
Plotdriver: 152226_V8FULL_B&W_PDF.plt

Project ID: 0000000000152226
Client Number: 012145

ProjectWise Directory: Pima_County_Dept_of_Transportation\PCDOT_Valencia_Mtn_Eagle_Mark\13.00_CAD\Construction Documents\Civil\Wade to Mark\17C-01.dgn
Model: 17C0110

Printed By: jefrey Date: 7/21/2014 2:14:43 PM

Print Scale: 1:5

F.H.W.A. REGION	STATE	PROJECT NO.	SHEET NO.	TOTAL SHEETS	AS BUILT
9	ARIZ.	STP-PPM-0(230)A			
		0000 PM PPM SS975 01C			

GENERAL NOTES

1. This detail is for roadway layout only.
2. The ET-PLUS shall be installed in accordance with the manufacturer's specifications and current approved drawings including all details, hardware, hardware quantities, and other information.

   The current manufacturer's approved drawing is number SS-358, 05/16/11. Visit the ADOT Roadway Design web site to view and print the drawing.
3. "Leaveouts" in asphaltic concrete shall be provided in the AC pavement around the guardrail posts at the locations and dimensions specified on the manufacturer approved drawings. "Leaveout" material shall consist of a 1-sack grout mix or other non-cohesive material as approved by the engineer.
4. See specifications and ADOT Traffic Signing and Marking Standard Drawings.

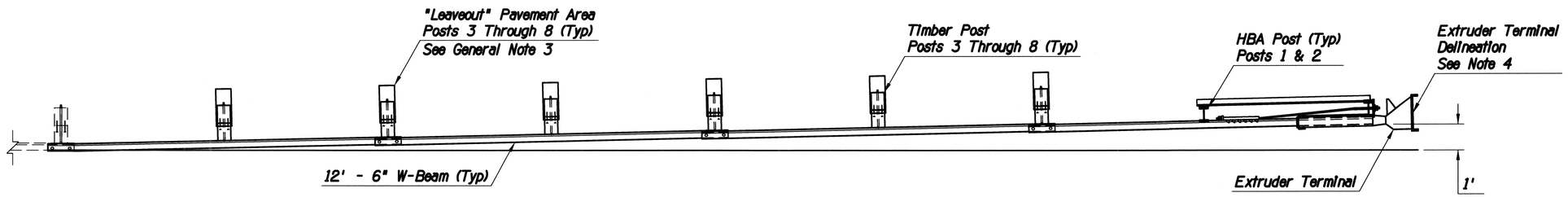

PLAN
N.T.S.

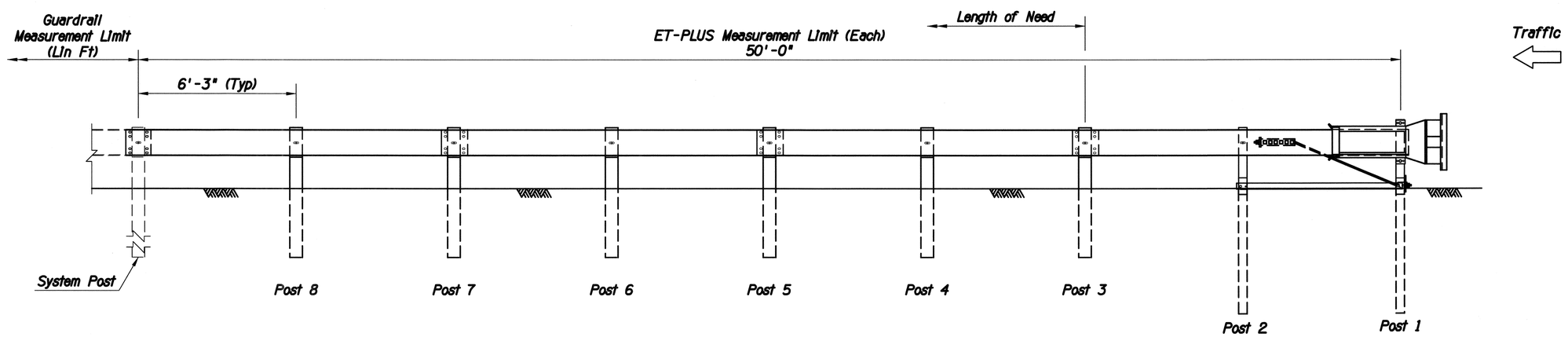

ELEVATION
N.T.S.

DETAIL O

Sheet 1 of 2

LAYOUT FOR ET-PLUS HBA POSTS (AC PAVEMENT)

Scales	Horiz. As Noted Vert. As Noted	Sheet DT12 of DT55	Page 25 of 281

Print Scale: 1:100

TRACS No. SS975 01C

Pima County Department of Transportation

Priscilla S. Cornelio, P.E., Director

Designed	ABL	03/2014
Drawn	ABL	03/2014
Checked	RDB	03/2014
Proj. Engr.	RDB	03/2014

No.	Revision Description	Engineer	Date

Registered Professional Engineer (Civil) CERTIFICATE NO. 13762 ROBERT DEAN BRITTAIN Date Signed 7-21-14 ARIZONA U.S.A.

Expires 3-31-17

HDR Engineering, Inc.
4120 East Wilshire Circle, Suite 530
Tucson, AZ 85711-4459
(520) 584-3600

VALENCIA ROAD
WADE ROAD TO MARK ROAD
PROJECT NO. 4RTVMW

Pentable: 152226_PLOTORDR.TBL
Plotdriver: 152226_V8FULL_B&W_PDF.plt

Project ID: 0000000000152226
Client Number: 012145

ProjectWise Directory: Pima_County_Dept_of_Transportation\PCDOT_Valencia_Mtn_Eagle_Mark\13.00_CAD\Construction Documents\Civil\Wade to Mark\17C-01.dgn
Model: 17C0111

Printed By: jefrey Date: 7/21/2014 2:14:45 PM

▲ Top of Rail = 28"
See General Note 1
Std Dwg C-10.03

F.H.W.A. REGION	STATE	PROJECT NO.	SHEET NO.	TOTAL SHEETS	AS BUILT
9	ARIZ.	STP-PPM-012301A			
0000 PM PPM SS975 OIC					

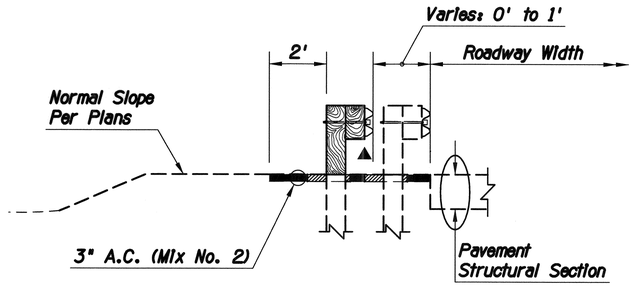

TYPE A SECTION
N.T.S.

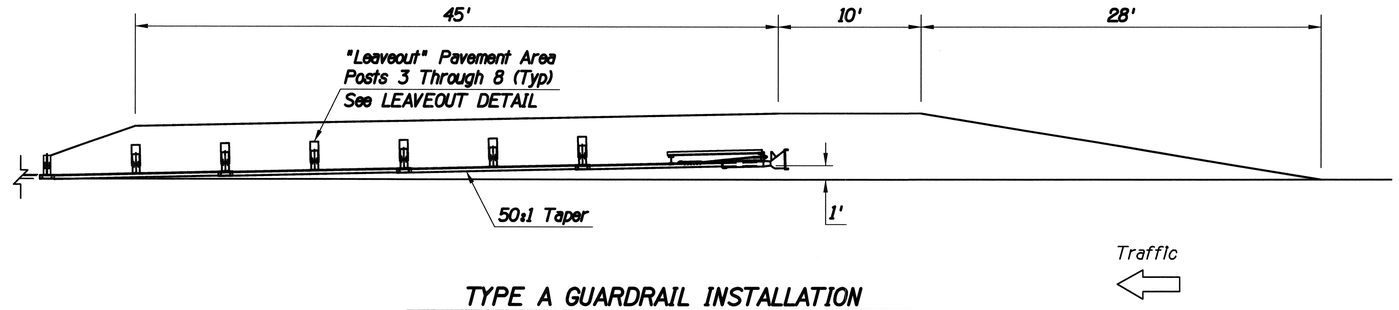

TYPE A GUARDRAIL INSTALLATION
(FACE OF RAIL AT EDGE OF PAVEMENT)

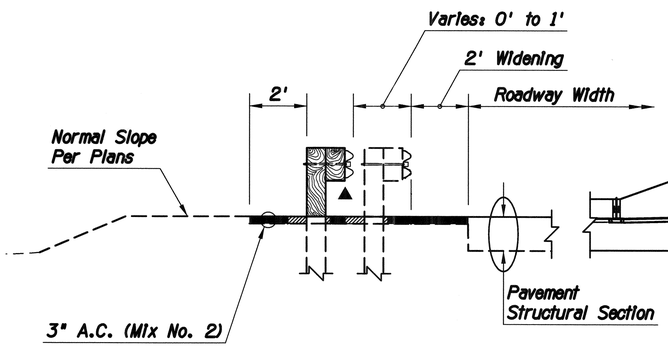

TYPE B SECTION
N.T.S.

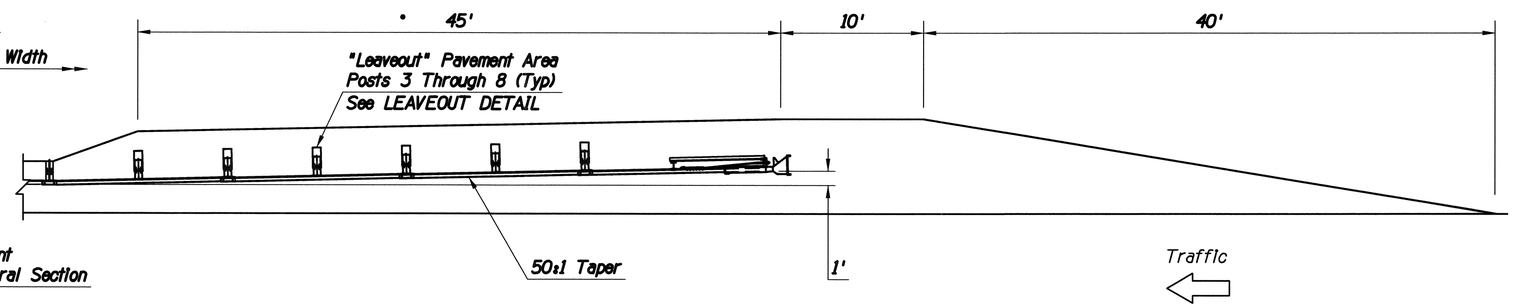

TYPE B GUARDRAIL INSTALLATION
(FACE OF RAIL OFFSET 2' FROM NORMAL EDGE OF PAVEMENT)

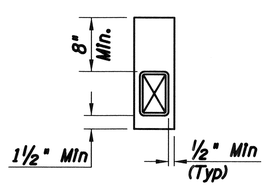

LEAVEOUT DETAIL
N.T.S.

Note:

AC Pavement Widening will be paid for under Item 4060002.

DETAIL O

Sheet 2 of 2

LAYOUT FOR ET-PLUS HBA POSTS (AC PAVEMENT)

Scales	Horiz. As Noted Vert. As Noted	Sheet DT13 of DT55	Page 26 of 281

Pima County Department of Transportation

Priscilla S. Cornelio, P.E., Director

	Date
Designed ABL	03/2014
Drawn ABL	03/2014
Checked RDB	03/2014
Proj. Engr. RDB	03/2014

No.	Revision Description	Engineer	Date

Registered Professional Engineer (Civil) CERTIFICATE NO. 13762 ROBERT DEAN BRITTAIN Date Signed 7-21-14 ARIZONA U.S.A. Expires 3-31-17

HDR Engineering, Inc.
5210 East Williams Circle, Suite 530
Tucson, AZ 85711-4459
(520) 594-3600

VALENCIA ROAD
WADE ROAD TO MARK ROAD
PROJECT NO. 4RTVMW

Pentable: 152226_PLOTORDR.TBL
Plotdriver: 152226_V8FULL_B&W_PDF.plt

Project ID: 0000000000152226
Client Number: 012145

F.H.W.A. REGION	STATE	PROJECT NO.	SHEET NO.	TOTAL SHEETS	AS BUILT
9	ARIZ.	STP-PPM-012301A			
		0000 PM PPM SS975 01C			

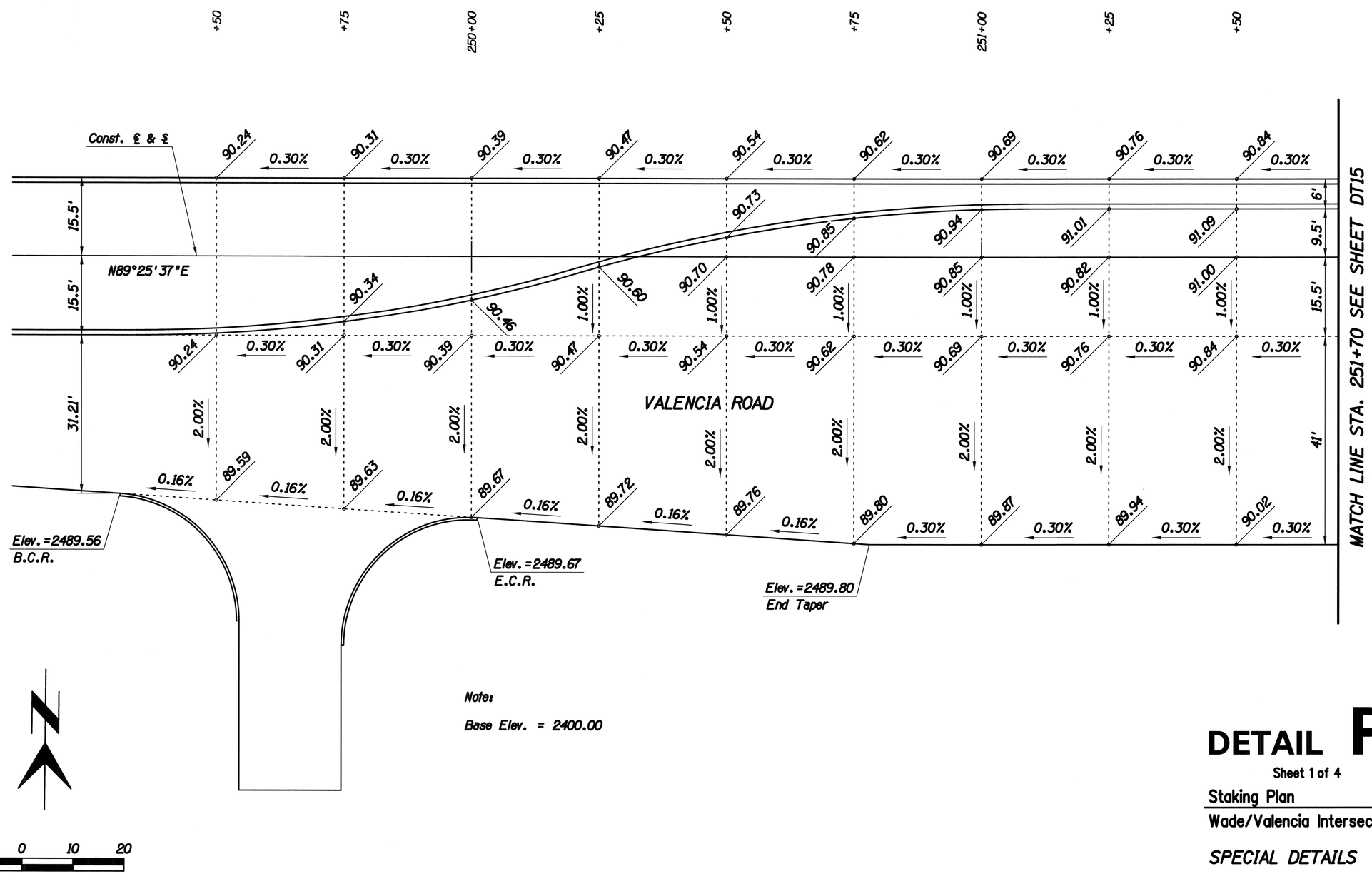

Note:

Base Elev. = 2400.00

DETAIL P

Sheet 1 of 4

Staking Plan

Wade/Valencia Intersection

SPECIAL DETAILS

Pima County Department of Transportation

Priscilla S. Cornelio, P.E., Director

No.	Revision Description	Engineer	Date

		Date
Designed	JMF	03/2014
Drawn	JMF	03/2014
Checked	RDB	03/2014
Proj. Engr.	RDB	03/2014

Registered Professional Engineer (Civil) CERTIFICATE NO. 13762 ROBERT DEAN BRITTAIN Date Signed 7-21-14 ARIZONA U.S.A. Expires 3-31-17

HDR Engineering, Inc. 5210 East Williams Circle, Suite 530 Tucson, AZ 85711-4459 (520) 584-3600

VALENCIA ROAD
WADE ROAD TO MARK ROAD
PROJECT NO. 4RTVMW

Scales	Horiz. 1"=10' Vert. 1"=NA	Sheet DT14 of DT55	Page 27 of 281

Print Scale: 1:10

TRACS No. SS975 01C

Pentable: 152226_PLOTORDR.TBL
Plotdriver: 152226_V8FULL_B&W_PDF.plt

Project ID: 0000000015222 6
Client Number: 012145

ProjectWise Directory: Pima_County_Dept_of_Transportation\PCDOT_Valencia_Mtn_Eagle_Mark\13.00_CAD\Construction Documents\Civil\Wade to Mark\17C-01.dgn
Model: 17C0113

Printed By: jefrey Date: 7/21/2014 2:14:49 PM

F.H.W.A. REGION	STATE	PROJECT NO.	SHEET NO.	TOTAL SHEETS	AS BUILT
9	ARIZ.	STP-PPM-0(230)A			
		0000 PM PPM SS975 01C			

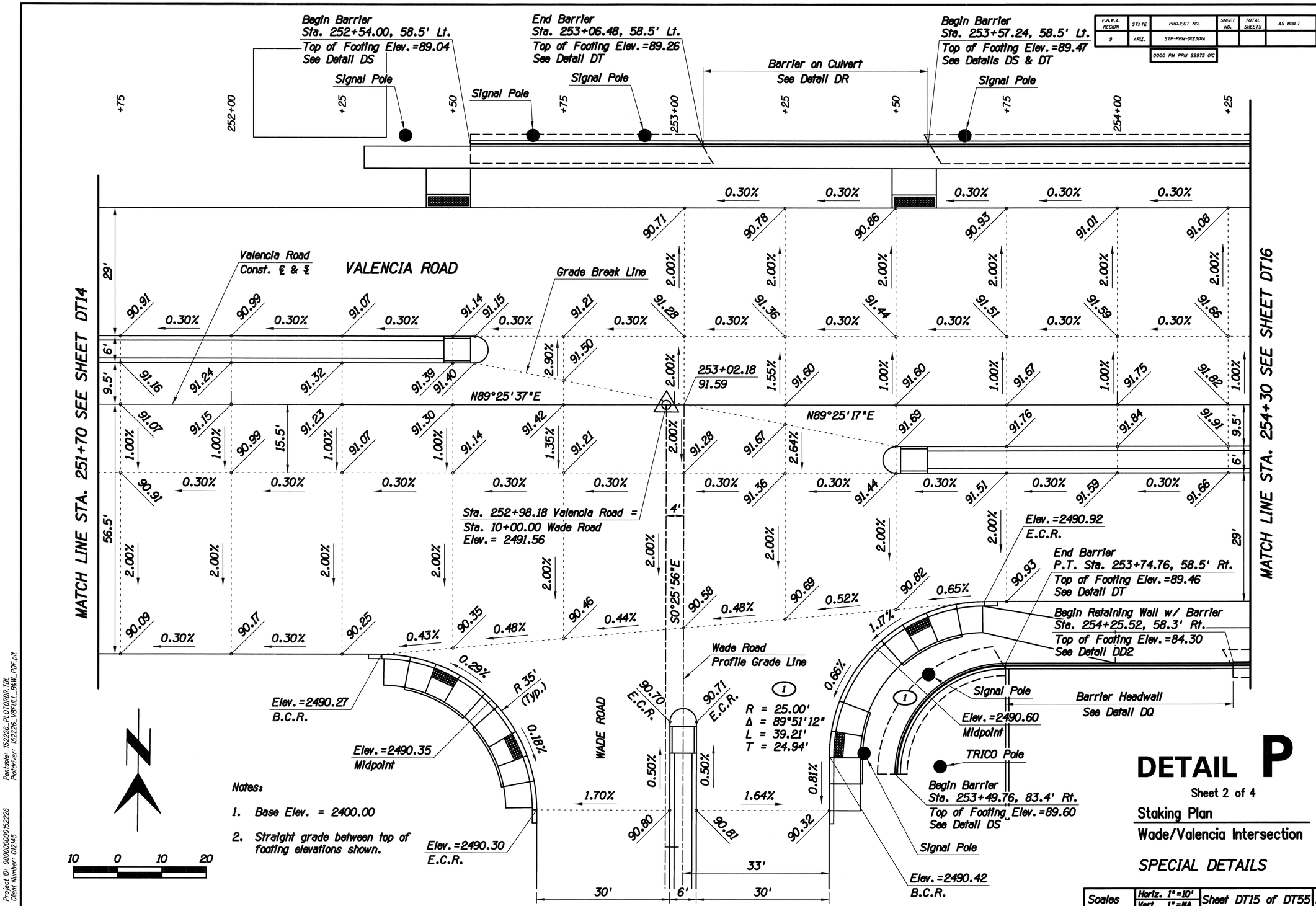

Notes:

1. Base Elev. = 2400.00
2. Straight grade between top of footing elevations shown.

DETAIL P

Sheet 2 of 4

Staking Plan

Wade/Valencia Intersection

SPECIAL DETAILS

No.	Revision Description	Engineer	Date

		Date
Designed	JMF	03/2014
Drawn	JMF	03/2014
Checked	RDB	03/2014
Proj. Engr.	RDB	03/2014

Priscilla S. Cornelio, P.E., Director

Pima County Department of Transportation

Registered Professional Engineer (Civil) CERTIFICATE NO. 13762 ROBERT DEAN BRITTAIN Date Signed 7-21-14 ARIZONA U.S.A. Expires 3-31-17

HDR Engineering, Inc.
5210 East Williams Circle, Suite 530
Tucson, AZ 85711-4459
(520) 584-3600

VALENCIA ROAD
WADE ROAD TO MARK ROAD
PROJECT NO. 4RTVMW

Scales	Horiz. 1"=10' Vert. 1"=NA	Sheet DT15 of DT55	Page 28 of 281

Print Scale: 1:10

TRACS No. SS975 01C

Pentable: 152226_PLOTORDR.TBL
Plotdriver: 152226_V8FULL_B&W_PDF.plt

Project ID: 0000000015222 6
Client Number: 012145

ProjectWise Directory: Pima_County_Dept_of_Transportation\PCDOT_Valencia_Mtn_Eagle_Mark\13.00_CAD\Construction Documents\Civil\Wade to Mark\17C-01.dgn
Model: 17C0114

Printed By: jefrey Date: 7/21/2014 2:14:51 PM

F.H.W.A. REGION	STATE	PROJECT NO.	SHEET NO.	TOTAL SHEETS	AS BUILT
9	ARIZ.	STP-PPM-0(230)A			
		0000 PM PPM SS975 01C			

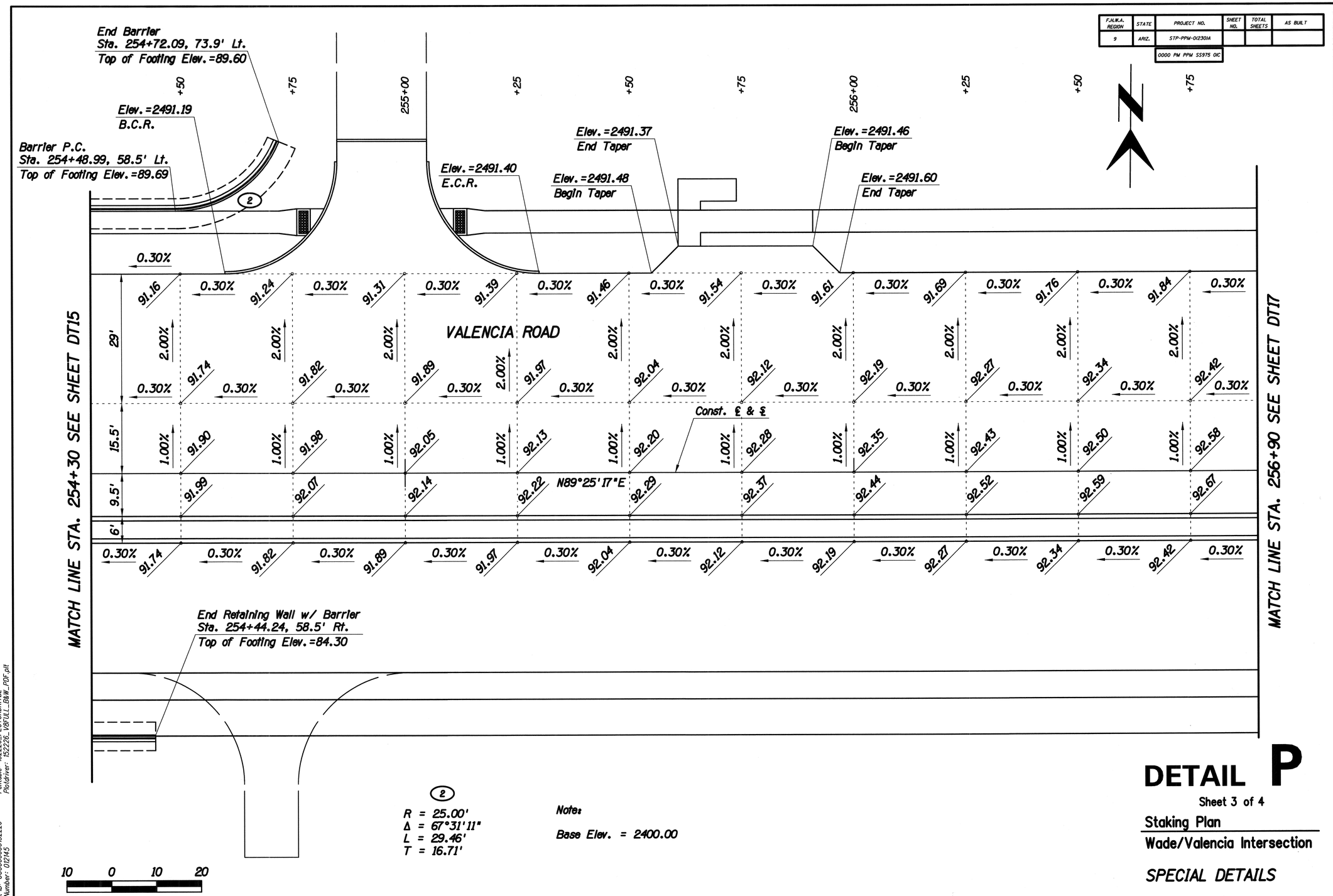

Notes:

Base Elev. = 2400.00

DETAIL P

Sheet 3 of 4

Staking Plan

Wade/Valencia Intersection

SPECIAL DETAILS

Scales	Horiz. 1"=10' Vert. 1"=NA	Sheet DT16 of DT55	Page 29 of 281

Print Scale: 1:10

TRACS No. SS975 01C

Pima County Department of Transportation

Priscilla S. Cornelio, P.E., Director

Designed	JMF	03/2014
Drawn	JMF	03/2014
Checked	RDB	03/2014
Proj. Engr.	RDB	03/2014

No.	Revision Description	Engineer	Date

Registered Professional Engineer (Civil) CERTIFICATE NO. 13762 ROBERT DEAN BRITTAIN Date Signed 7-21-14 ARIZONA U.S.A.

Expires 3-31-17

HDR Engineering, Inc.
5230 East Williams Circle, Suite 530
Tucson, AZ 85711-4459
(520) 584-3600

VALENCIA ROAD
WADE ROAD TO MARK ROAD
PROJECT NO. 4RTVMW

Pentable: 152226_PLOTORDR.TBL
Plotdriver: 152226_V8FULL_B&W_PDF.plt

Project ID: 0000000052226
Client Number: 012145

ProjectWise Directory: Pima_County_Dept_of_Transportation\PCDOT_Valencia_Mtn_Eagle_Mark\13.00_CAD\Construction Documents\Civil\Wade to Mark\17C-01.dgn
Model: 17C0115

Printed By: jefrey Date: 7/21/2014 2:14:54 PM

F.H.W.A. REGION	STATE	PROJECT NO.	SHEET NO.	TOTAL SHEETS	AS BUILT
9	ARIZ.	STP-PPM-0123(A)			
		0000 PM PPM SS975 01C			

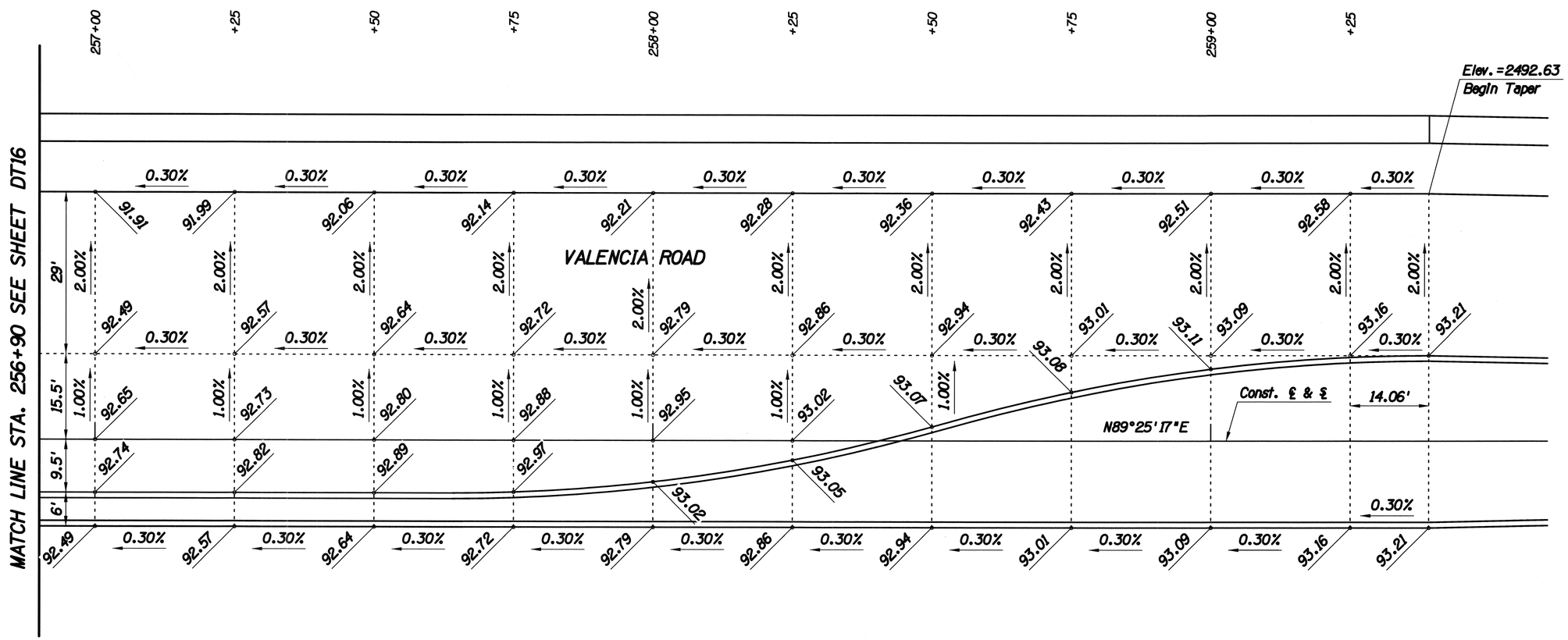

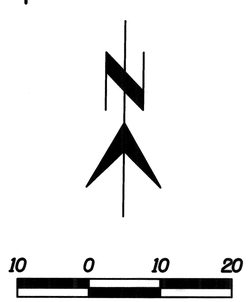

Note:

Base Elev. = 2400.00

DETAIL P

Sheet 4 of 4

Staking Plan

Wade/Valencia Intersection

SPECIAL DETAILS

Pima County Department of Transportation

Priscilla S. Cornelio, P.E., Director

No.	Revision Description	Date

Engineer	Date

		Date
Designed	JMF	03/2014
Drawn	JMF	03/2014
Checked	RDB	03/2014
Proj. Engr.	RDB	03/2014

Registered Professional Engineer (Civil) CERTIFICATE NO. 13762 ROBERT DEAN BRITTAIN Date Signed 7-21-14 ARIZONA U.S.A.

Expires 3-31-17

HDR Engineering, Inc.
5210 East Williams Circle, Suite 530
Tucson, AZ 85711-4459
(520) 584-3600

VALENCIA ROAD
WADE ROAD TO MARK ROAD
PROJECT NO. 4RTVMW

Scales	Hortz. 1"=10' Vert. 1"=NA	Sheet DT17 of DT55	Page 30 of 281

TRACS No. SS975 01C

Pentable: 152226_PLOTORDR.TBL
Plotdriver: 152226_V8FULL_B&W_PDF.plt

Project ID: 0000000000152226
Client Number: 012145

F.H.W.A. REGION	STATE	PROJECT NO.	SHEET NO.	TOTAL SHEETS	AS BUILT
9	ARIZ.	STP-PPM-0(230)A			
		0000 PM PPM SS975 01C			

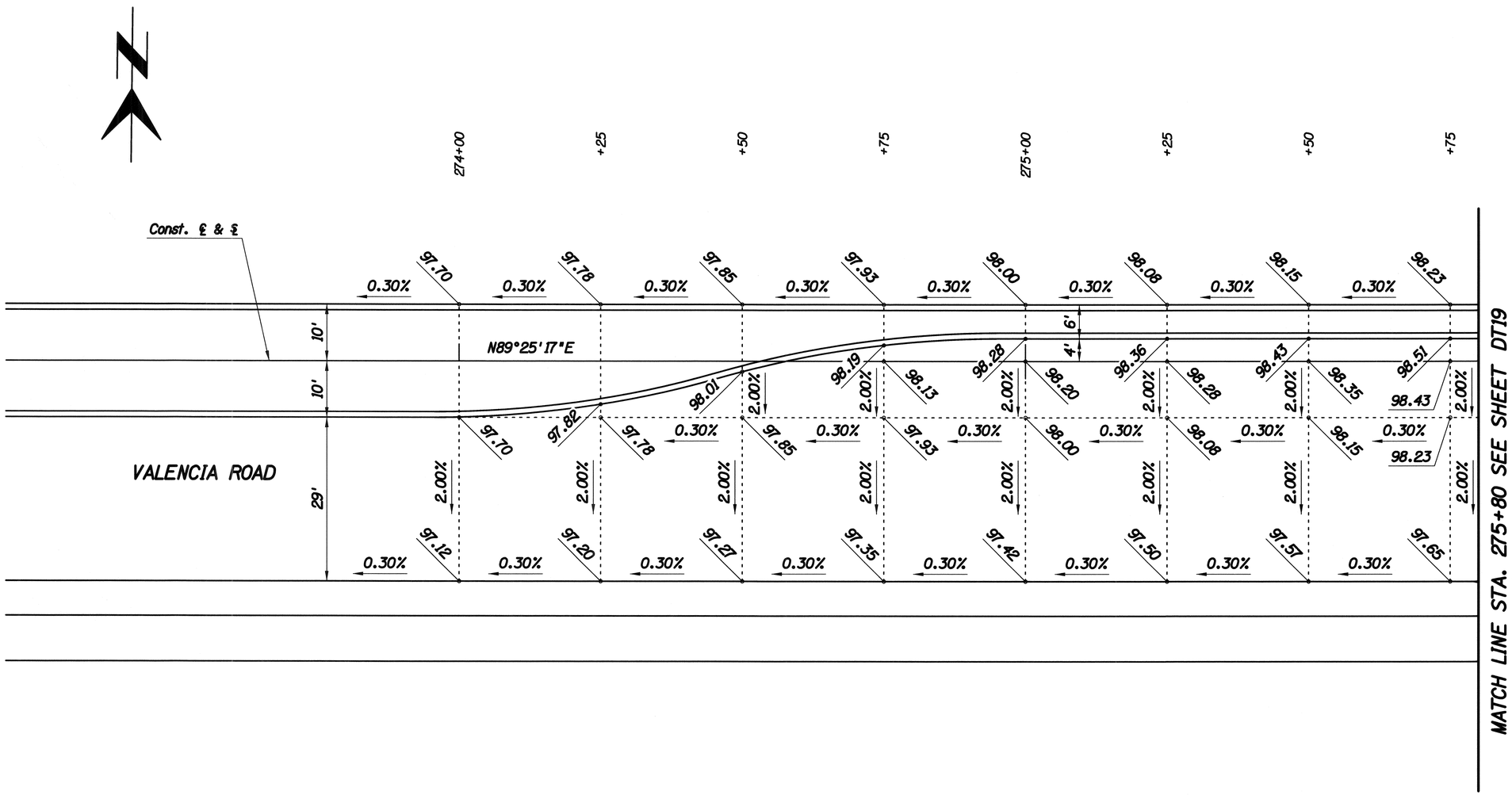

DETAIL Q

Sheet 1 of 5

Staking Plan

Camino Verde/Valencia Intersection

Notes:

Base Elev. = 2400.00

10 0 10 20

SPECIAL DETAILS

Scales	Horiz. 1"=10' Vert. 1"=NA	Sheet DT18 of DT55	Page 31 of 281

Pima County Department of Transportation

Priscilla S. Cornelio, P.E., Director

No.	Revision Description	Engineer	Date

		Date
Designed	JMF	03/2014
Drawn	JMF	03/2014
Checked	RDB	03/2014
Proj. Engr.	RDB	03/2014

Registered Professional Engineer (Civil) CERTIFICATE NO. 13762 ROBERT DEAN BRITTAIN Date Signed 7-21-14 ARIZONA U.S.A. Expires 3-31-17

HDR Engineering, Inc. 5210 East Williams Circle, Suite 530 Tucson, AZ 85711-4459 (520) 584-3600

VALENCIA ROAD
WADE ROAD TO MARK ROAD
PROJECT NO. 4RTVMW

Pentable: 152226_PLOTORDR.TBL
Plotdriver: 152226_V8FULL_B&W_PDF.plt

Project ID: 0000000000152226
Client Number: 012145

ProjectWise Directory: Pima_County_Dept_of_Transportation\PCDOT_Valencia_Mtn_Eagle_Mark\13.00_CAD\Construction Documents\Civil\Wade to Mark\17C-01.dgn
Model: 17C0117

Printed By: jefrey Date: 7/21/2014 2:15:00 PM Print Scale: 1:10

TRACS No. SS975 01C

F.H.W.A. REGION	STATE	PROJECT NO.	SHEET NO.	TOTAL SHEETS	AS BUILT
9	ARIZ.	STP-PPM-0(230)A			
		0000 PM PPM SS975 01C			

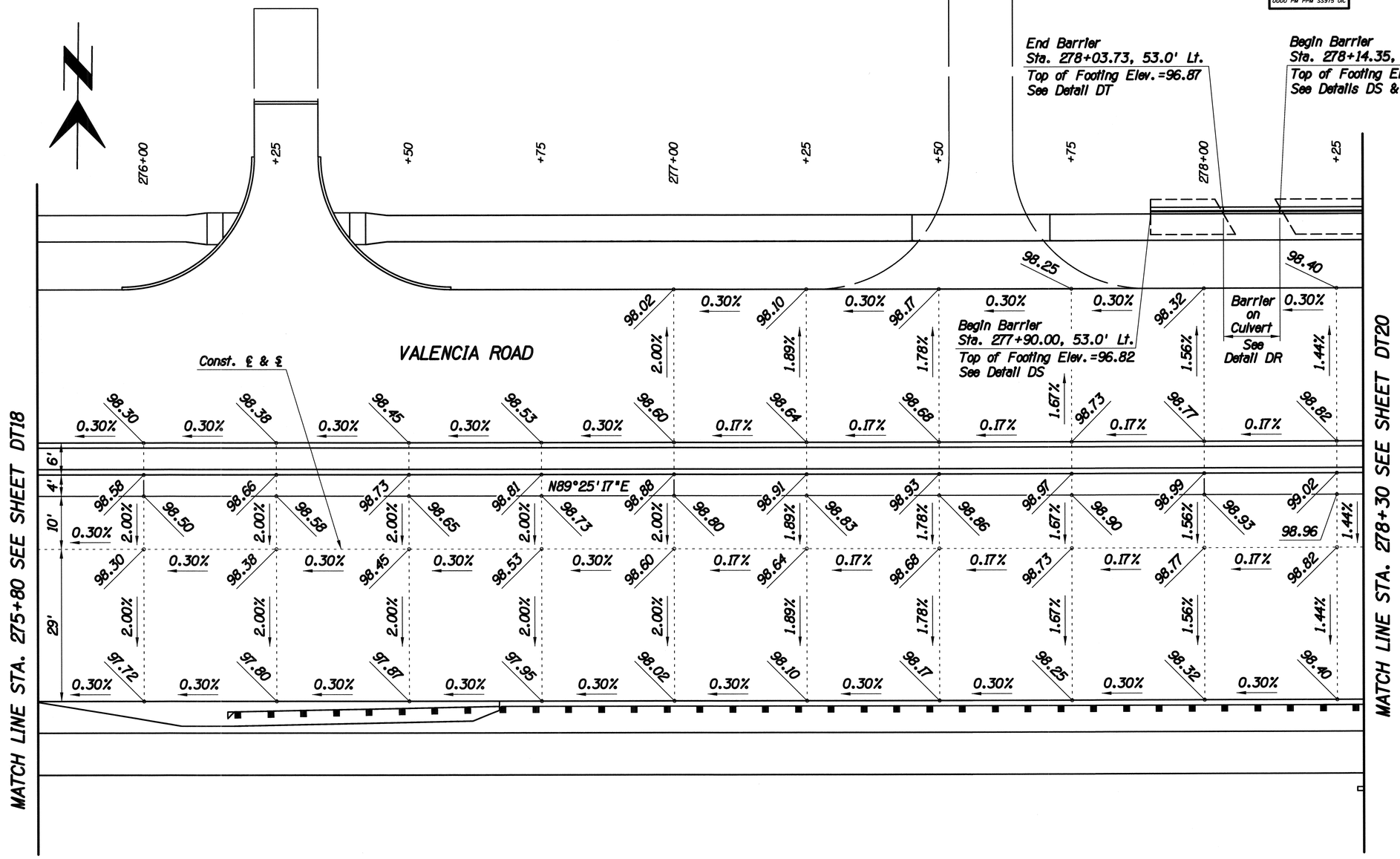

DETAIL Q

Sheet 2 of 5

Staking Plan

Camino Verde/Valencia Intersection

Note:

Base Elev. = 2400.00

10 0 10 20

SPECIAL DETAILS

Scales	Horiz. 1"=10' Vert. 1"=NA	Sheet DT19 of DT55	Page 32 of 281

TRACS No. SS975 01C

Pima County Department of Transportation

Priscilla S. Cornelio, P.E., Director

		Date
Designed	JMF	03/2014
Drawn	JMF	03/2014
Checked	RDB	03/2014
Proj. Engr.	RDB	03/2014

No.	Revision Description	Engineer	Date

Registered Professional Engineer (Civil) CERTIFICATE NO. 13762 ROBERT DEAN BRITTAIN Date Signed 2-21-14 ARIZONA U.S.A. Expires 2-31-17

HDR Engineering, Inc.
5210 East Williams Circle, Suite 530
Tucson, AZ 85711-4459
(520) 584-3600

VALENCIA ROAD
WADE ROAD TO MARK ROAD
PROJECT NO. 4RTVMW

Pentable: 152226_PLOTDRDR.TBL
Plotdriver: 152226_V8FULL_B&W_PDF.plt

Project ID: 0000000015226
Client Number: 012145

ProjectWise Directory: Pima_County_Dept_of_Transportation\PCDOT_Valencia_Mtn_Eagle_Mark\13.00_CAD\Construction Documents\Civil\Wade to Mark\17C-01.dgn
Model: 17C0118

Printed By: jefrey Date: 7/21/2014 2:15:02 PM

Print Scale: 1:10

F.H.W.A. REGION	STATE	PROJECT NO.	SHEET NO.	TOTAL SHEETS	AS BUILT
9	ARIZ.	STP-PPM-0(230)A			
		0000 PM PPM SS975 01C			

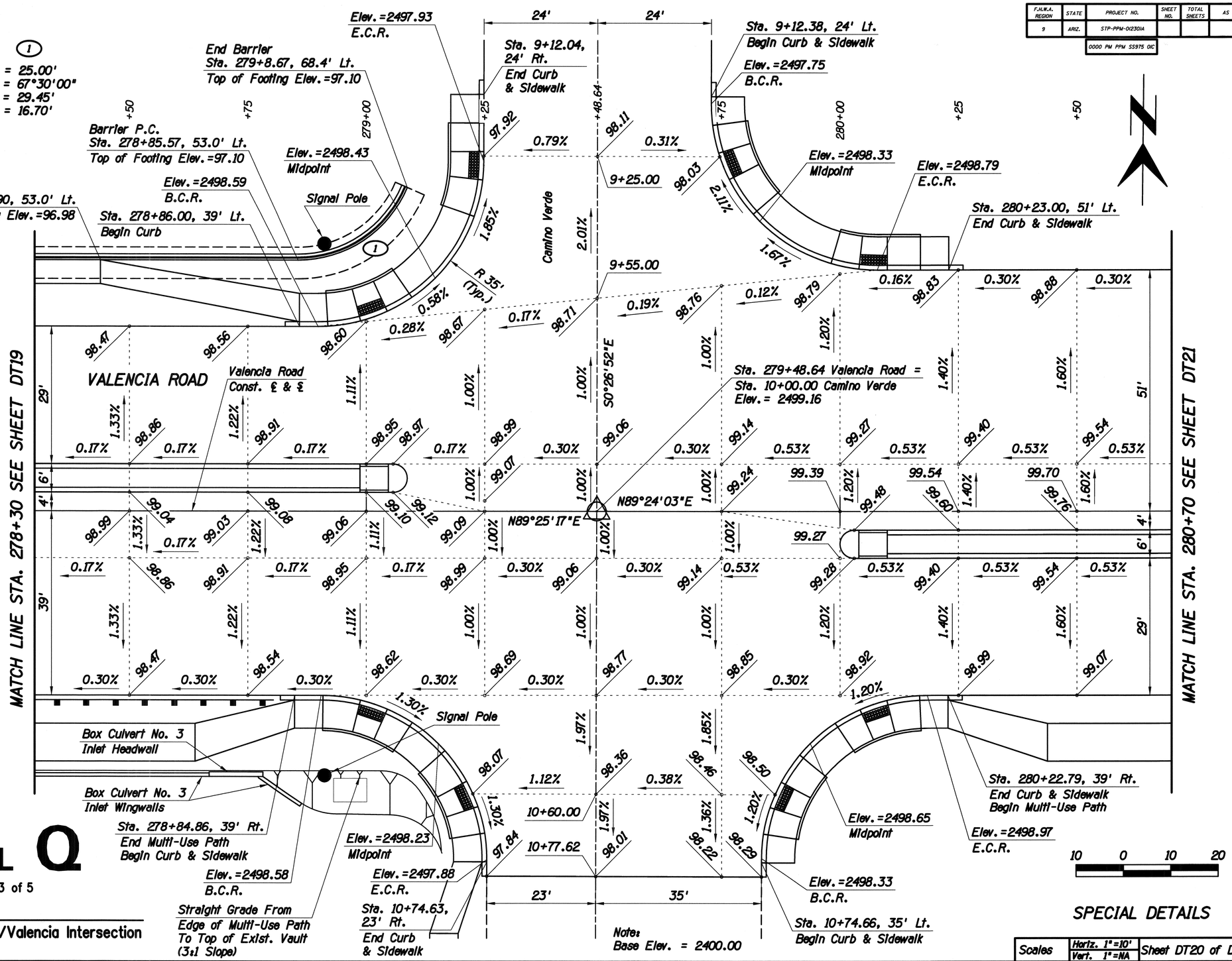

DETAIL Q

Sheet 3 of 5

Staking Plan

Camino Verde/Valencia Intersection

SPECIAL DETAILS

Scales	Horiz. 1"=10' Vert. 1"=NA	Sheet DT20 of DT55	Page 33 of 281

TRACS No. SS975 01C

Pima County Department of Transportation

Priscilla S. Cornelio, P.E., Director

No.	Revision Description	Engineer	Date

		Date
Designed	JMF	03/2014
Drawn	JMF	03/2014
Checked	RDB	03/2014
Proj. Engr.	RDB	03/2014

Registered Professional Engineer (Civil) CERTIFICATE NO. 13762 ROBERT DEAN BRITTAIN Date Signed 2-21-14 ARIZONA U.S.A. Expires 3-31-17

HDR Engineering, Inc.
5210 East Williams Circle, Suite 530
Tucson, AZ 85711-4459
(520) 584-3600

VALENCIA ROAD
WADE ROAD TO MARK ROAD
PROJECT NO. 4RTVMW

Pentable: 152226_PLOTORDR.TBL
Plotdriver: 152226_V8FULL_B&W_PDF.plt

Project ID: 0000000015222 6
Client Number: 012145

ProjectWise Directory: Pima_County_Dept_of_Transportation\PCDOT_Valencia_Mtn_Eagle_Mark\13.00_CAD\Construction Documents\Civil\Wade to Mark\17C-01.dgn
Model: 17C0119

Printed By: jefrey Date: 7/21/2014 2:15:04 PM

Print Scale: 1:10

F.H.W.A. REGION	STATE	PROJECT NO.	SHEET NO.	TOTAL SHEETS	AS BUILT
9	ARIZ.	STP-PPM-0(230)A			
		0000 PM PPM SS975 01C			

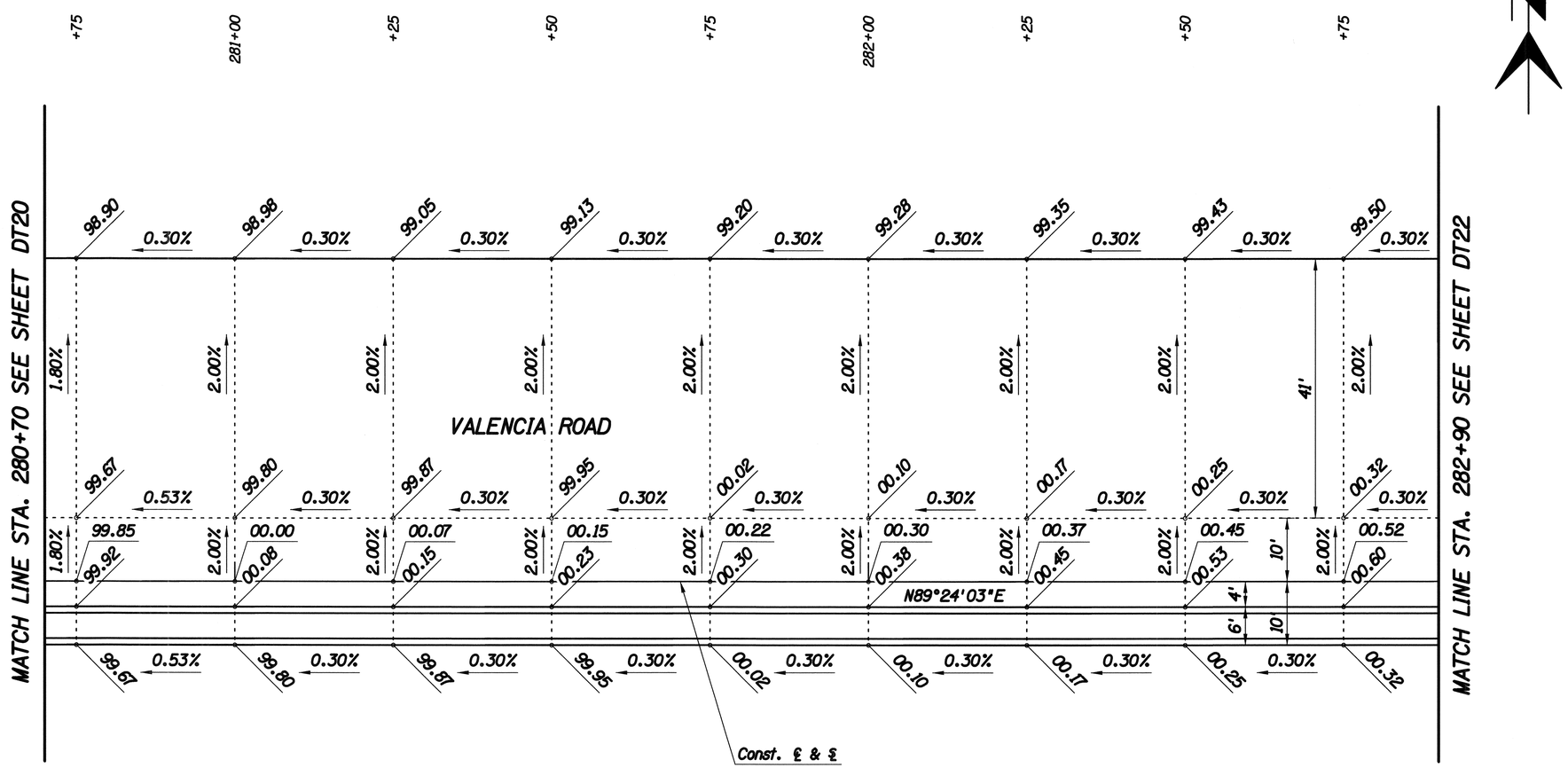

DETAIL Q

Sheet 4 of 5

Staking Plan

Camino Verde/Valencia Intersection

Note:

Base Elev. = 2400.00 for 98.90-99.95
Base Elev. = 2500.00 for 00.01-00.60

10 0 10 20

SPECIAL DETAILS

Pima County Department of Transportation

Priscilla S. Cornelio, P.E., Director

No.	Revision Description	Engineer	Date

		Date
Designed	JMF	03/2014
Drawn	JMF	03/2014
Checked	RDB	03/2014
Proj. Engr.	RDB	03/2014

Registered Professional Engineer (Civil) CERTIFICATE NO. 13762 ROBERT DEAN BRITTAIN Date Signed 7-21-14 ARIZONA U.S.A. Expires 3-31-17

HDR Engineering, Inc.
5210 East Williams Circle, Suite 530
Tucson, AZ 85711-4459
(520) 594-3600

VALENCIA ROAD
WADE ROAD TO MARK ROAD
PROJECT NO. 4RTVMW

Scales	Horiz. 1"=10' Vert. 1"=NA	Sheet DT21 of DT55	Page 34 of 281

TRACS No. SS975 01C

Pentable: 152226_PLOTDRDR.TBL
Plotdriver: 152226_V8FULL_B&W_PDF.plt

Project ID: 0000000052226
Client Number: 012145

F.H.W.A. REGION	STATE	PROJECT NO.	SHEET NO.	TOTAL SHEETS	AS BUILT
9	ARIZ.	STP-PPM-012301A			
		0000 PM PPM SS975 01C			

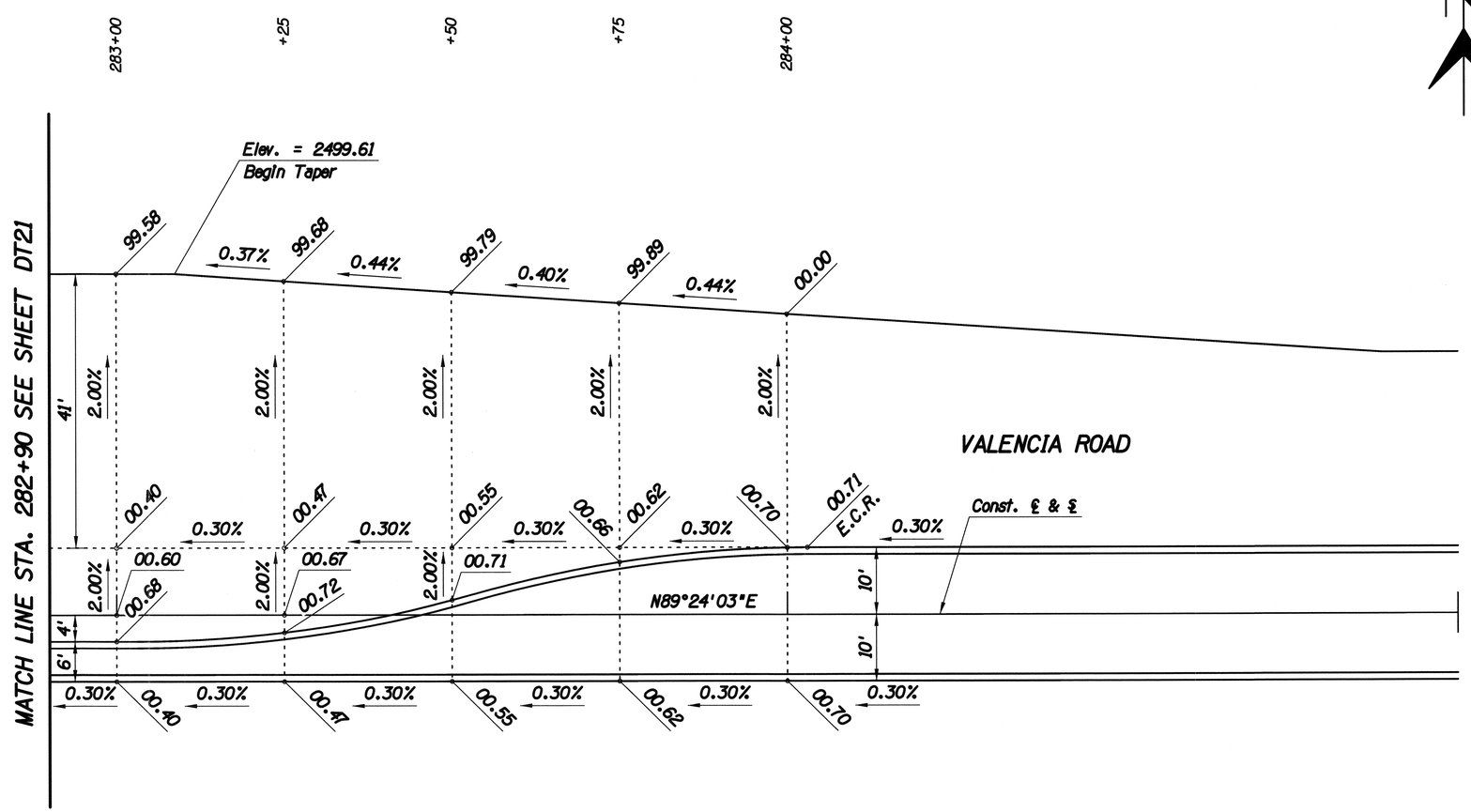

DETAIL Q

Sheet 5 of 5

Staking Plan

Camino Verde/Valencia Intersection

Note:

Base Elev. = 2400.00 for 99.58-99.89
Base Elev. = 2500.00 for 00.00-00.71

10 0 10 20

SPECIAL DETAILS

Scales	Horiz. 1"=10'	Sheet DT22 of DT55	Page 35 of 281
	Vert. 1"=NA		

Print Scale: 1:10

TRACS No. SS975 01C

Pima County Department of Transportation

Priscilla S. Cornelio, P.E., Director

No.	Revision Description	Engineer	Date

		Date
Designed	JMF	03/2014
Drawn	JMF	03/2014
Checked	RDB	03/2014
Proj. Engr.	RDB	03/2014

Registered Professional Engineer (Civil) CERTIFICATE NO. 13762 ROBERT DEAN BRITTAIN Date Signed 7-21-14 ARIZONA U.S.A.

Expires 3-31-17

HDR Engineering, Inc.
5370 E. Williams Circle, Suite 530
Tucson, AZ 85711-4459
(520) 584-3600

VALENCIA ROAD
WADE ROAD TO MARK ROAD
PROJECT NO. 4RTVMW

Pentable: 152226_PLOTORDR.TBL
Plotdriver: 152226_V8FULL_B&W_PDF.plt

Project ID: 0000000152226
Client Number: 012145

ProjectWise Directory: Pima_County_Dept_of_Transportation\PCDOT_Valencia_Mtn_Eagle_Mark\13.00_CAD\Construction Documents\Civil\Wade to Mark\17C-01.dgn
Model: 17C0120a

Printed By: jefrey Date: 7/21/2014 2:15:09 PM

F.H.W.A. REGION	STATE	PROJECT NO.	SHEET NO.	TOTAL SHEETS	AS BUILT
9	ARIZ.	STP-PPM-0(230)A			
		0000 PM PPM SS975 01C			

① Access Ramp Control Point. See table this sheet for location.

② Detectable Warning Strip 6'x2' (Typ.). See PC Std. Dtl. 207, Sheet 8 of 8.

③ See plans for radius.

◪ Provide Minimum of 6' of Sidewalk Along Curbline (Typ.)

▲ 6' at Back of Curb

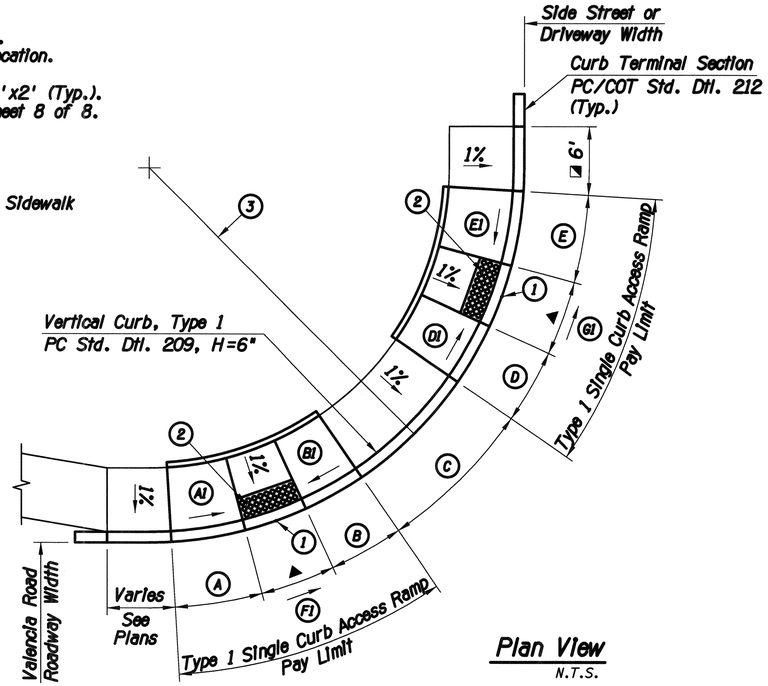

Plan View

N.T.S.

Notes:

1. See Std. Dtl. 207 for all other information.
2. Type 1 Curb Access Ramp will be paid for under Bid Item 9080280, Curb Access Ramp, PC Std. Dtl. 207 (Type 1).
3. See table this sheet for ramp location. Curb access ramp should be oriented to align with the crosswalk or stop line, median refuge area, and with the opposite access ramp in the direction of pedestrian travel.
4. Lengths are provided along edge of pavement.

Control Point ①	Ⓐ	Ⓐ1	Ⓑ	Ⓑ1	Ⓒ	Ⓓ	Ⓓ1	Ⓔ	Ⓔ1	Ⓕ1	Ⓖ1
Location, Sta. & Offset	Length (Ft.)	Slope (%)	Length (Ft.)	Slope (%)	Length (Ft.)	Length (Ft.)	Slope (%)	Length (Ft.)	Slope (%)	Slope (%)	Slope (%)
Wade Road, Sta. 10+60.01, 49.05' Rt.	6	8.0	7	7.4	4.0	7	7.3	6	8.2	-0.3	0.2
Wade Road, Sta. 10+76.63, 32.39' Rt.											
Wade Road, Sta. 10+48.15, 56.07' Lt.	7	8.3	6	7.2	16.8	7	7.8	6	7.6	1.2	0.7
Wade Road, Sta. 10+75.73, 37.18' Lt.											
Camino Verde, Sta. 9+59.04, 47.08' Rt.	7	7.7	6	7.8	21.9	8	8.2	6	6.0	0.6	1.9
Camino Verde, Sta. 9+26.94, 24.01' Rt.											
Camino Verde, Sta. 9+48.84, 58.32' Lt.	8	7.6	6	7.0	19.7	9	7.8	6	6.1	1.3	2.0
Camino Verde, Sta. 9+27.04, 26.58' Lt.											
Camino Verde, Sta. 10+40.98, 46.87' Rt.	8	7.5	6	7.1	9.1	8	7.5	6	7.1	1.3	1.3
Camino Verde, Sta. 10+60.04, 25.98' Rt.											
Camino Verde, Sta. 10+40.73, 58.48' Lt.	7	8.3	6	7.2	10.1	7	8.3	6	7.2	1.2	1.2
Camino Verde, Sta. 10+60.04, 37.81' Lt.											
W. Casino Entrance, Sta. 10+56.80, 25.59' Rt.	N/A	N/A	N/A	N/A	N/A	6	7.2	7	8.3	N/A	-1.1
W. Casino Entrance, Sta. 10+56.80, 26.59' Lt.	N/A	N/A	N/A	N/A	N/A	6	5.7	9	8.2	N/A	-1.4
E. Casino Entrance, Sta. 10+47.13, 66.15' Rt.	6	7.1	7	7.6	4.0	8	7.7	6	6.9	-0.4	1.4
E. Casino Entrance, Sta. 10+60.00, 48.92' Rt.											
E. Casino Entrance, Sta. 10+36.59, 58.39' Lt.	9	7.8	6	6.1	7.5	11	8.0	6	5.6	1.1	2.0
E. Casino Entrance, Sta. 10+60.00, 40.86' Lt.											
Ignacio Baumea, Sta. 10+64.62, 31.95' Rt.	N/A	N/A	N/A	N/A	N/A	8	7.4	6	6.7	N/A	1.7
Ignacio Baumea, Sta. 10+65.70, 22.99' Lt.	N/A	N/A	N/A	N/A	N/A	9	7.3	6	5.0	N/A	1.7

DETAIL R

Type 1 Curb Access Ramp

SPECIAL DETAILS

Pima County Department of Transportation

Priscilla S. Cornelio, P.E., Director

		Date
Designed	JMF	03/2014
Drawn	BJP, JMF	03/2014
Checked	RDB	03/2014
Proj. Engr.	RDB	03/2014

No.	Revision Description	Engineer	Date

Registered Professional Engineer (Civil) CERTIFICATE NO. 13762 ROBERT DEAN BRITTAIN Date Signed 7-21-14 ARIZONA U.S.A. Expires 7-31-17

HDR Engineering, Inc. 5210 E. Williams Circle, Suite 530 Tucson, AZ 85711-4459 (520) 584-3500

VALENCIA ROAD
WADE ROAD TO MARK ROAD
PROJECT NO. 4RTVMW

Pentable: 152226_PLOTORDR.TBL
Plotdriver: 152226_V8FULL_B&W_PDF.plt

Project ID: 0000000015222 6
Client Number: 012145

Scales	Horiz. 1"=NA	Sheet DT23 of DT55	Page 36 of 281
	Vert. 1"=NA		

TRACS No. SS975 01C

ProjectWise Directory: Pima_County_Dept_of_Transportation\PCDOT_Valencia_Mtn_Eagle_Mark\13.00_CAD\Construction Documents\Civil\Wade to Mark\17C-01.dgn
Model: 17C0121

Printed By: jefrey Date: 7/21/2014 2:15:12 PM

Print Scale: 1:5

STATION	PS	SIZE (Inches)	LENGTH (Feet)	1" CONDUIT (Feet)
234+78, 50' Rt. to 235+26, 50' Rt.	PS1	4	48	-
238+50, 43' Lt. to 238+50, 43' Rt.	PS2	6	86	86
237+98, 51' Rt. to 238+22, 51' Rt.	PS3	4	24	-
238+15, 73' Lt. to 238+15, 87' Lt.	PS4	4	14	-
240+11, 56' Lt. to 240+29, 56' Lt.	PS5	6	18	18
249+00, 46' Lt. to 249+00, 13' Lt.	PS6	6	33	33
249+00, 13' Rt. to 249+00, 46' Rt.	PS7	6	33	33
249+52, 84' Rt. to 249+76, 84' Rt.	PS8	6	24	24
252+42, 49' Lt. to 252+56, 49' Lt.	PS9	6	14	14
252+66, 92' Rt. to 253+38, 92' Rt.	PS10	6	72	72
253+47, 49' Lt. to 253+61, 49' Lt.	PS11	6	14	14
254+72, 60' Lt. to 254+72, 53' Lt.	PS12	6	7	7
254+82, 82' Lt. to 255+07, 82' Lt.	PS13	6	25	25
260+15, 61' Lt. to 260+41, 61' Lt.	PS14	6	26	26
262+01, 54' Lt. to 262+01, 47' Lt.	PS15	4	7	-
262+01, 41' Lt. to 262+01, 7' Lt.	PS16	4	34	-
262+63, 64' Lt. to 262+87, 64' Lt.	PS17	6	24	24
263+38, 64' Lt. to 263+62, 64' Lt.	PS18	6	24	24
266+12, 61' Lt. to 266+36, 61' Lt.	PS19	6	24	24
268+88, 63' Lt. to 269+12, 63' Lt.	PS20	6	24	24
270+01, 54' Lt. to 270+01, 47' Lt.	PS21	6	7	7
270+01, 40' Lt. to 270+01, 7' Lt.	PS22	6	33	33
270+01, 7' Rt. to 270+01, 54' Rt.	PS23	6	47	47
270+68, 63' Lt. to 270+92, 63' Lt.	PS24	6	24	24
273+51, 62' Lt. to 273+68, 62' Lt.	PS25	6	17	17
276+18, 56' Lt. to 276+37, 56' Lt.	PS26	6	19	19
277+37, 54' Lt. to 277+37, 47' Lt.	PS27	6	7	7
277+40, 44' Lt. to 277+76, 44' Lt.	PS28	6	36	36
277+77, 54' Lt. to 277+77, 47' Lt.	PS29	4	7	-
278+59, 45' Lt. to 278+80, 48' Lt.	PS30	6	21	21
279+15, 69' Lt. to 279+89, 69' Lt.	PS31	6	74	74
279+10, 57' Rt. to 279+98, 57' Rt.	PS32	6	88	88
Wade - 12+43, 58' Rt. to 12+69, 58' Rt.	PS32a	4	26	-
285+50, 41' Lt. to 285+50, 8' Lt.	PS33	6	33	33
285+50, 8' Rt. to 285+50, 55' Rt.	PS34	6	47	47
287+54, 51' Lt. to 287+99, 51' Lt.	PS35	4	45	-
288+76, 51' Lt. to 289+00, 51' Lt.	PS36	4	24	-
290+10, 55' Rt. to 290+30, 55' Rt.	PS37	4	20	-
296+05, 44' Rt. to 296+05, 54' Rt.	PS38	4	10	-
298+27, 44' Rt. to 298+71, 44' Rt.	PS39	4	44	-
299+00, 41' Lt. to 299+00, 8' Lt.	PS40	6	33	33
299+00, 8' Rt. to 299+00, 41' Rt.	PS41	6	33	33
299+00, 44' Rt. to 299+00, 54' Rt.	PS42	6	10	10
305+49, 63' Lt. to 305+88, 63' Lt.	PS43	6	39	39
308+81, 62' Lt. to 308+99, 62' Lt.	PS44	6	18	18
311+81, 57' Rt. to 311+99, 57' Rt.	PS45	6	18	-
314+51, 41' Lt. to 314+51, 8' Lt.	PS46	6	33	33
314+51, 8' Rt. to 314+51, 41' Rt.	PS47	6	33	33
314+51, 44' Rt. to 314+51, 54' Rt.	PS48	6	10	10
329+00, 41' Lt. to 329+00, 8' Lt.	PS49	6	33	33
329+00, 8' Rt. to 329+00, 55' Rt.	PS50	6	47	47
332+36, 61' Lt. to 332+62, 61' Lt.	PS51	6	26	26
332+36, 61' Rt. to 332+62, 61' Rt.	PS52	6	26	26
346+00, 40' Lt. to 346+00, 65' Rt.	PS53	4	105	-
TOTAL L.F.			1668	1242

DETAIL S

Irrigation Sleeve Summary

Notes:

1. All sleeves shall be installed per detail 808-6, IR19, Irrigation Plans.
2. All sleeves and conduit shall be Schedule 40 P.V.C.
3. Irrigation Sleeves will be paid for under Item No. 5010002.
4. Install 1" conduit adjacent to Irrigation Sleeves indicated in the table above. The conduit will be paid for under Item No. 7320010.

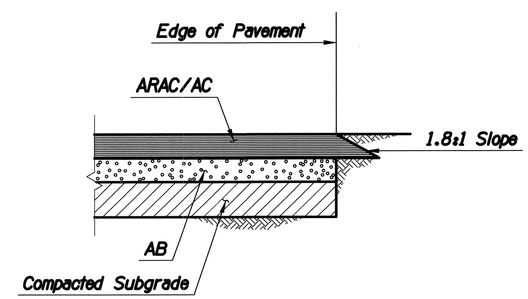

Notes:

1. Provide Safety Edge for Valencia Road and Wade Road whenever the edge of pavement is not adjacent to concrete.
2. See Section 406 of the Special Provisions.

DETAIL S1

AC Safety Edge

SPECIAL DETAILS

F.H.W.A. REGION	STATE	PROJECT NO.	SHEET NO.	TOTAL SHEETS	AS BUILT
9	ARIZ.	STP-PPM-0(230)A			
		0000 PM PPM SS975 01C			

Priscilla S. Cornelio, P.E., Director

Pima County Department of Transportation

No.	Revision Description	Date

Engineer

		Date
Designed	JMF	05/2011
Drawn	JMF	05/2011
Checked	RDB	05/2011
Proj. Engr.	RDB	05/2011

Registered Professional Engineer (Civil) CERTIFICATE NO. 13762 ROBERT DEAN BRITTAIN Date Signed 7-21-14 ARIZONA U.S.A. Expires 3-31-15

HDR Engineering, Inc. 5120 East Wills Circle, Suite 530 Tucson, AZ 85711-4459 (520) 584-3600

VALENCIA ROAD
WADE ROAD TO MARK ROAD
PROJECT NO. 4RTVWW

Scales	Horiz. 1"=NA Vert. 1"=NA	Sheet DT24 of DT55	Page 37 of 281

Print Scale: 1:40

TRACS No. SS975 01C

Pentable: 152226_PLOTORDR.TBL
Plotdriver: 152226_V8FULL_B&W_PDF.plt

Project ID: 0000000015226
Client Number: 012145

ProjectWise Directory: Pima_County_Dept_of_Transportation\PCDOT_Valencia_Mtn_Eagle_Mark\13.00_CAD\Construction Documents\Civil\Wade to Mark\17C-01.dgn
Model: 17C0122

Printed By: jefrey Date: 7/21/2014 2:15:15 PM

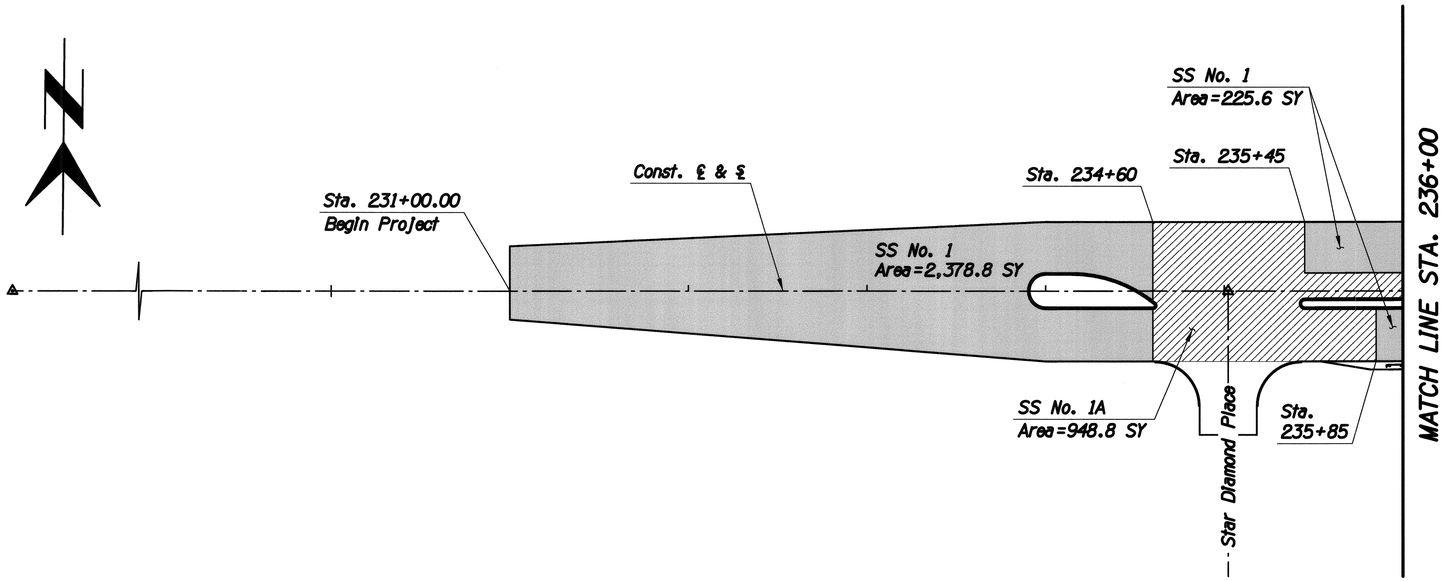

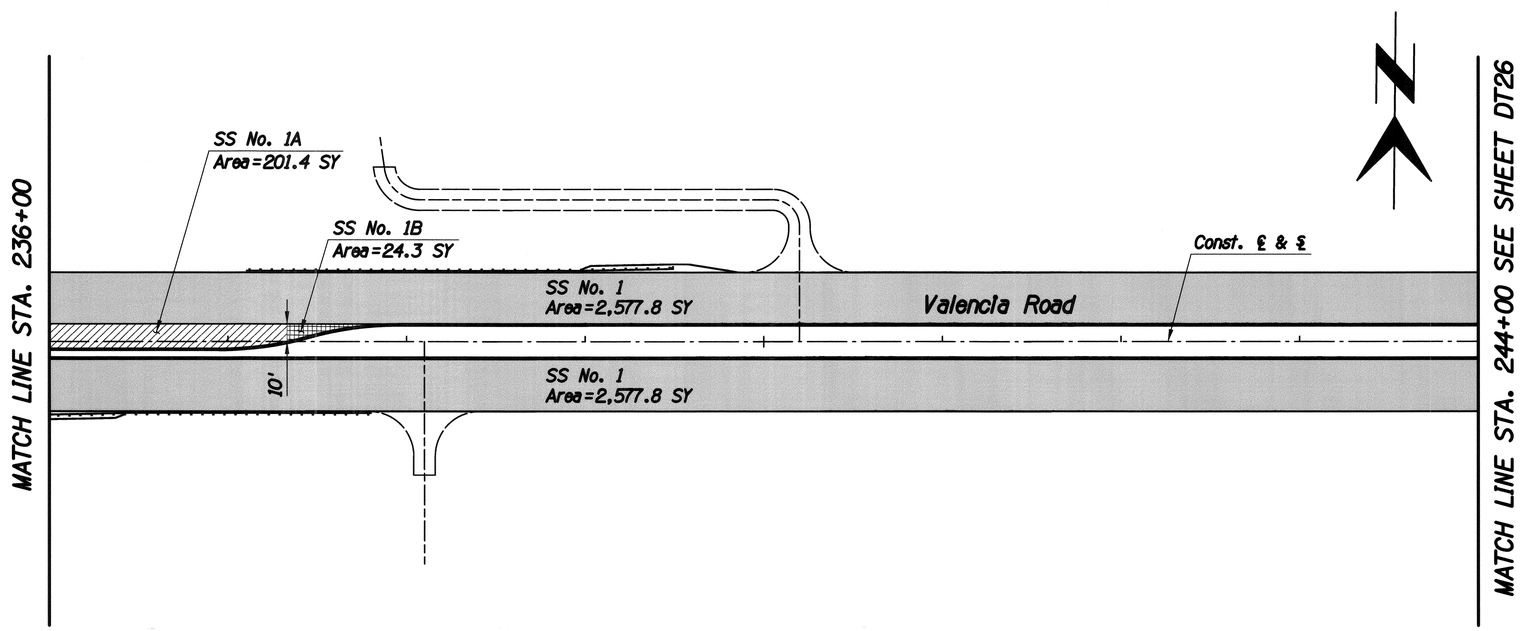

F.H.W.A. REGION	STATE	PROJECT NO.	SHEET NO.	TOTAL SHEETS	AS BUILT
9	ARIZ.	STP-PPM-0(230)A			
		0000 PM PPM SS975 01C			

SHEET TOTALS

Structural Section No. 1	7,760 SY
Structural Section No. 1A	1,150 SY
Structural Section No. 1B	24 SY

For other pavement section quantities, see Side Street Sheets & Paving Plans.

DETAIL T

Sheet 1 of 9

Pavement Placement Limits

SPECIAL DETAILS

	Date
Designed JMF	03/2014
Drawn JMF	03/2014
Checked RDB	03/2014
Proj. Engr. RDB	03/2014

Priscilla S. Cornelio, P.E., Director

No.	Revision Description	Engineer	Date

Registered Professional Engineer (Civil) CERTIFICATE NO. 13762 ROBERT DEAN BRITTAIN Date Signed 7-21-14 ARIZONA U.S.A. Expires 3-31-17

HDR Engineering, Inc.
4120 E. Broadway Circle, Suite 530
Tucson, AZ 85711-4459
(520) 584-3600

Pima County Department of Transportation

VALENCIA ROAD
WADE ROAD TO MARK ROAD
PROJECT NO. 4RTVMW

Scales: Horiz. 1"=40' Vert. 1"=4'

TRACS No. SS975 01C

Print Scale: 1:40

Project ID: 0000000001152226
Client Number: 012145

Pentable: 152226_PLOTORDR.TBL
Plotdriver: 152226_VBFULL_B&W_PDF.plt

ProjectWise Directory: Pima_County_Dept_of_Transportation\PCDOT_Valencia_Mtn_Eagle_Mark\13.00_CAD\Construction Documents\Civil\Wade to Mark\17C-03.dgn
Model: B17C23

Printed By: jefrey Date: 7/21/2014 2:15:20 PM

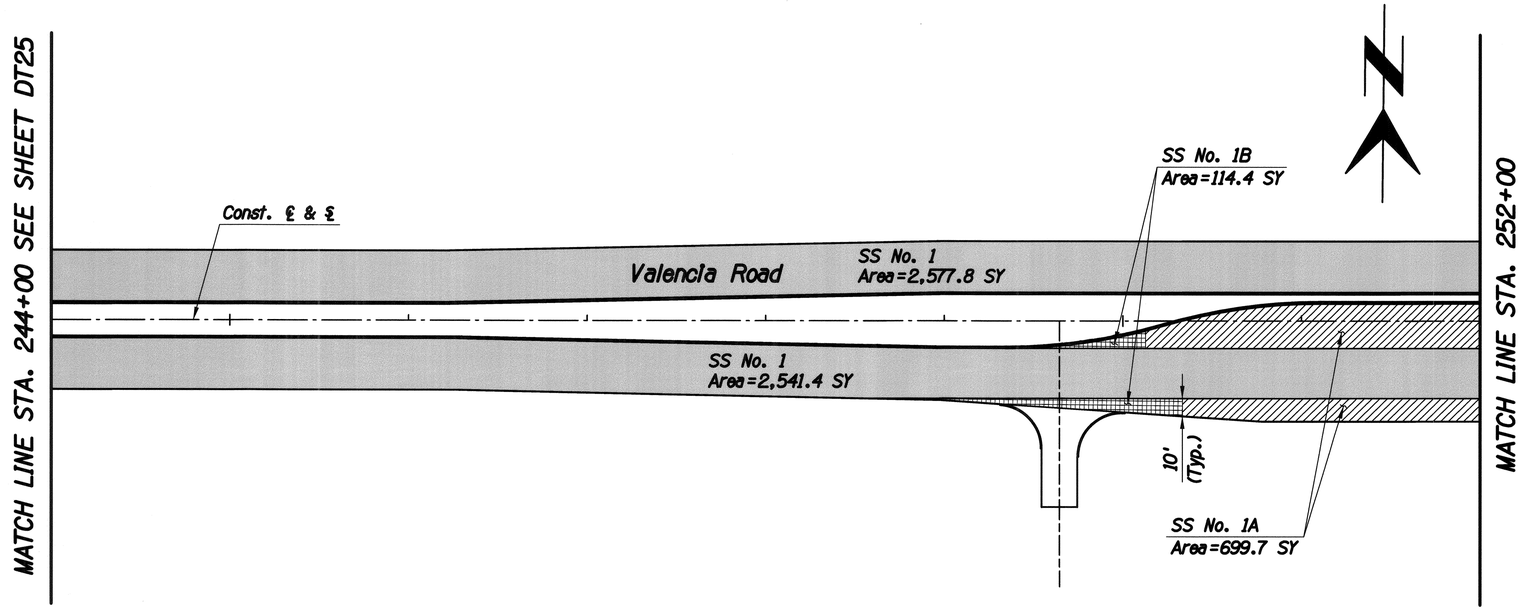

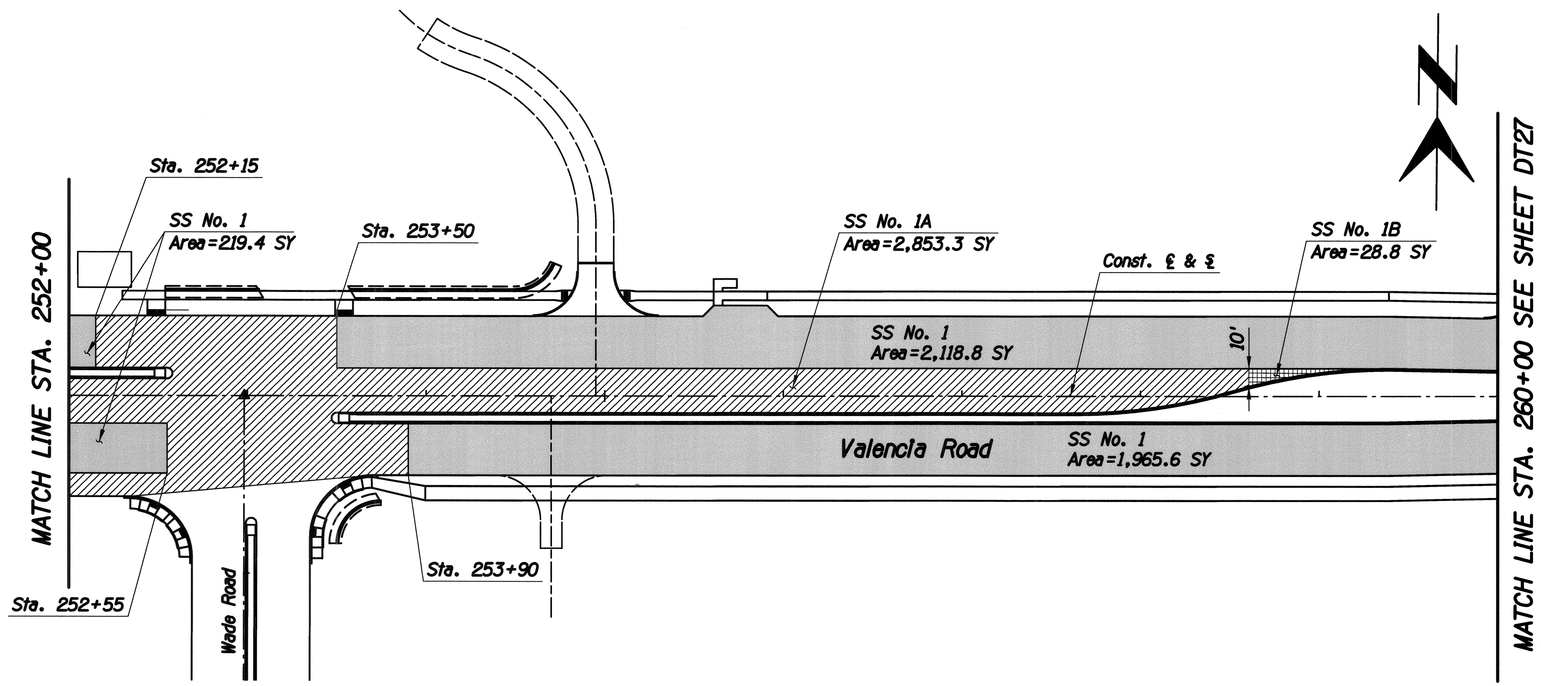

F.H.W.A. REGION	STATE	PROJECT NO.	SHEET NO.	TOTAL SHEETS	AS BUILT
9	ARIZ.	STP-PPM-0(230)A			
		0000 PM PPM SS975 01C			

SHEET TOTALS

Structural Section No. 1	9,423 SY
Structural Section No. 1A	3,553 SY
Structural Section No. 1B	143 SY

For other pavement section quantities, see Side Street Sheets & Paving Plans.

Priscilla S. Cornelio, P.E., Director

		Date
Designed	JMF	03/2014
Drawn	JMF	03/2014
Checked	RDB	03/2014
Proj. Engr.	RDB	03/2014

No.	Revision Description	Engineer	Date

Registered Professional Engineer (Civil) CERTIFICATE NO. 13762 ROBERT DEAN BRITTAIN Date Signed 7-21-14 ARIZONA U.S.A. Expires 7-31-17

HDR Engineering, Inc.
5210 East Williams Circle, Suite 530
Tucson, AZ 85711-4459
(520) 584-3600

Pima County Department of Transportation

VALENCIA ROAD
WADE ROAD TO MARK ROAD
PROJECT NO. 4RTVMW

DETAIL T

Sheet 2 of 9

Pavement Placement Limits

SPECIAL DETAILS

Scales	Horiz. 1"=40' Vert. 1"=4'	Sheet DT26 of DT55	Page 39 of 281

TRACS No. SS975 01C

Pentable: 152226_PLOTORDR.TBL
Plotdriver: 152226_V8FULL_B&W_PDF.plt

Project ID: 0000000000152226
Client Number: 012145

ProjectWise Directory: Pima_County_Dept_of_Transportation\PCDOT_Valencia_Mtn_Eagle_Mark\13.00_CAD\Construction Documents\Civil\Wade to Mark\17C-03.dgn
Model: B17C24

Printed By: jefrey Date: 7/21/2014 2:15:21 PM

Print Scale: 1:40

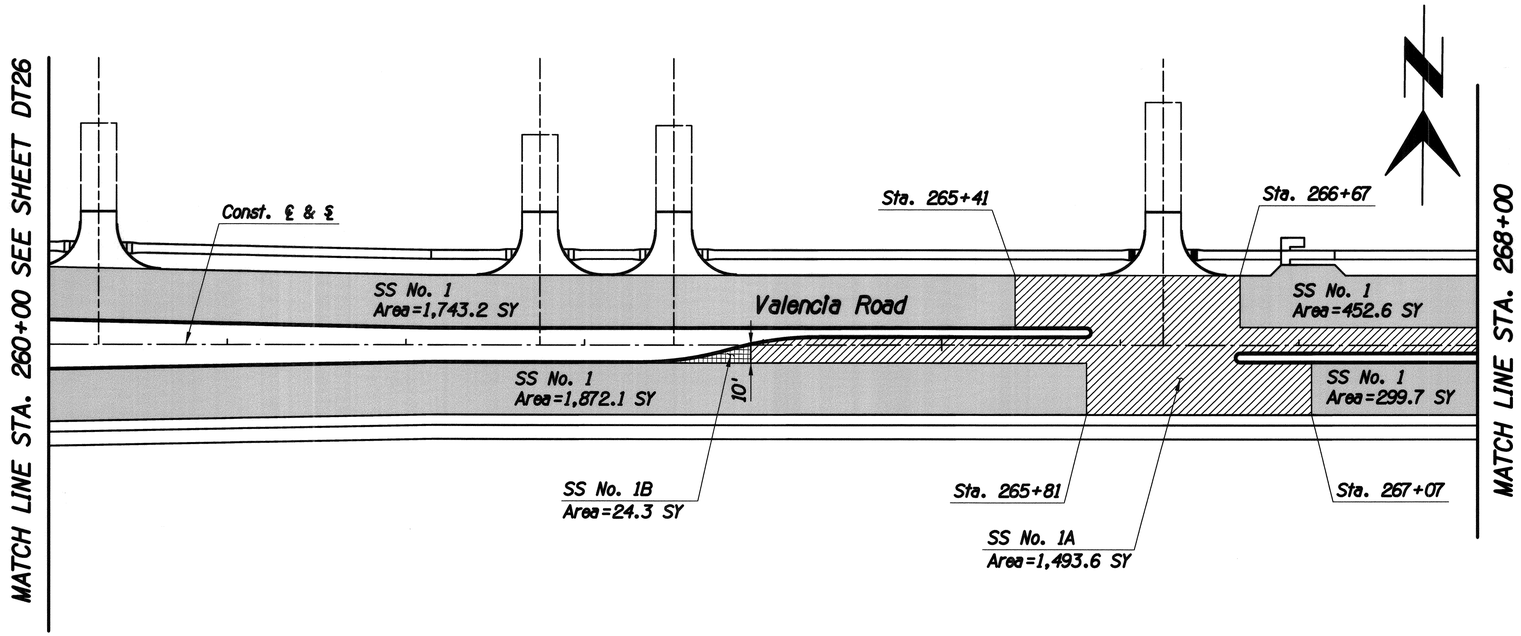

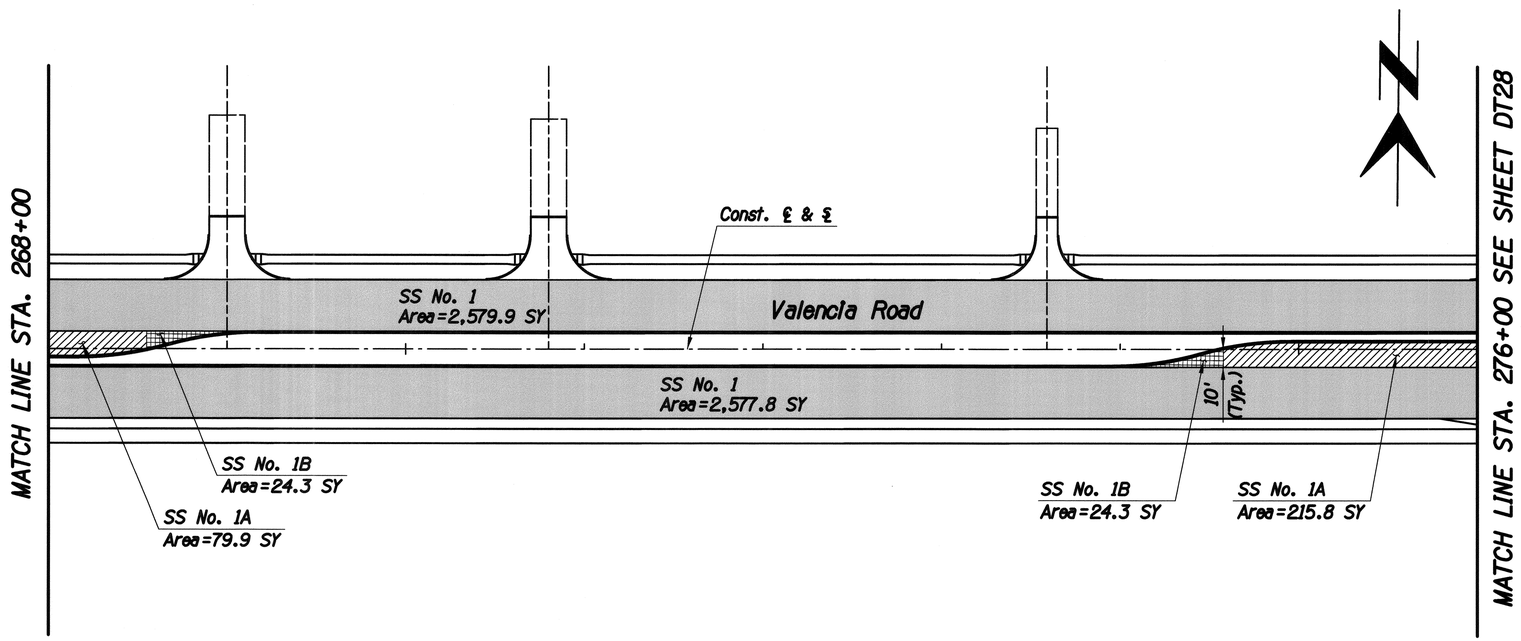

F.H.W.A. REGION	STATE	PROJECT NO.	SHEET NO.	TOTAL SHEETS	AS BUILT
9	ARIZ.	STP-PPM-0(230)A			
		0000 PM PPM SS975 01C			

SHEET TOTALS

Structural Section No. 1	9,525 SY
Structural Section No. 1A	1,789 SY
Structural Section No. 1B	73 SY

For other pavement section quantities, see Side Street Sheets & Paving Plans.

Priscilla S. Cornelio, P.E., Director

No.	Revision Description	Engineer	Date

		Date
Designed	JMF	03/2014
Drawn	JMF	03/2014
Checked	RDB	03/2014
Proj. Engr.	RDB	03/2014

Registered Professional Engineer (Civil) CERTIFICATE NO. 13762 ROBERT DEAN BRITTAIN Date Signed 2-21-14 ARIZONA U.S.A. Expires 3-31-17

HDR Engineering, Inc.
5210 East Williams Circle, Suite 530
Tucson, AZ 85711-4459
(520) 584-3600

Pima County Department of Transportation

VALENCIA ROAD
WADE ROAD TO MARK ROAD
PROJECT NO. 4RTVMW

DETAIL T

Sheet 3 of 9

Pavement Placement Limits

SPECIAL DETAILS

Scales	Horiz. 1"=40' Vert. 1"=4'	Sheet DT27 of DT55	Page 40 of 281

Project ID: 0000000000152226
Client Number: 012145
Pentable: 152226_PLOTORDR.TBL
Plotdriver: 152226_V8FULL_B&W_PDF.plt

ProjectWise Directory: Pima_County_Dept_of_Transportation\PCDOT_Valencia_Mtn_Eagle_Mark\13.00_CAD\Construction Documents\Civil\Wade to Mark\17C-03.dgn
Model: B17C25
Printed By: jefrey
Date: 7/21/2014 2:15:22 PM
Print Scale: 1:40
TRACS No. SS975 01C

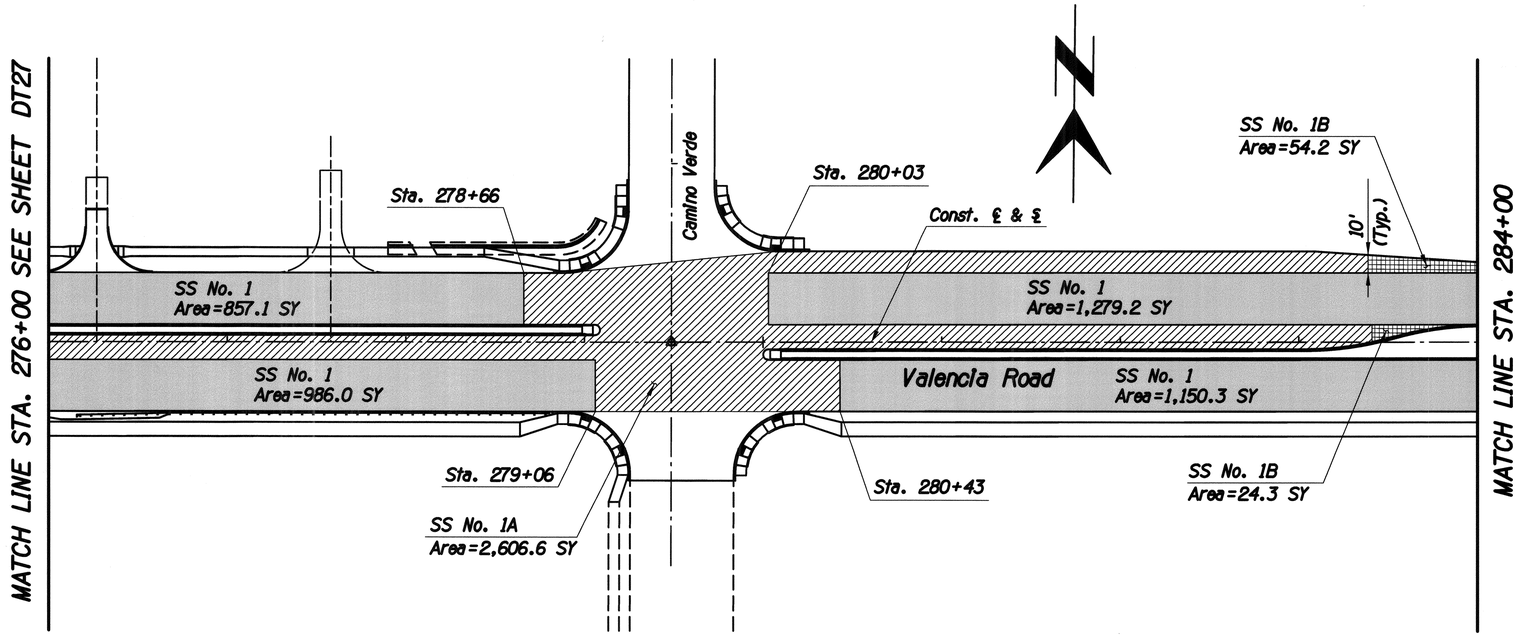

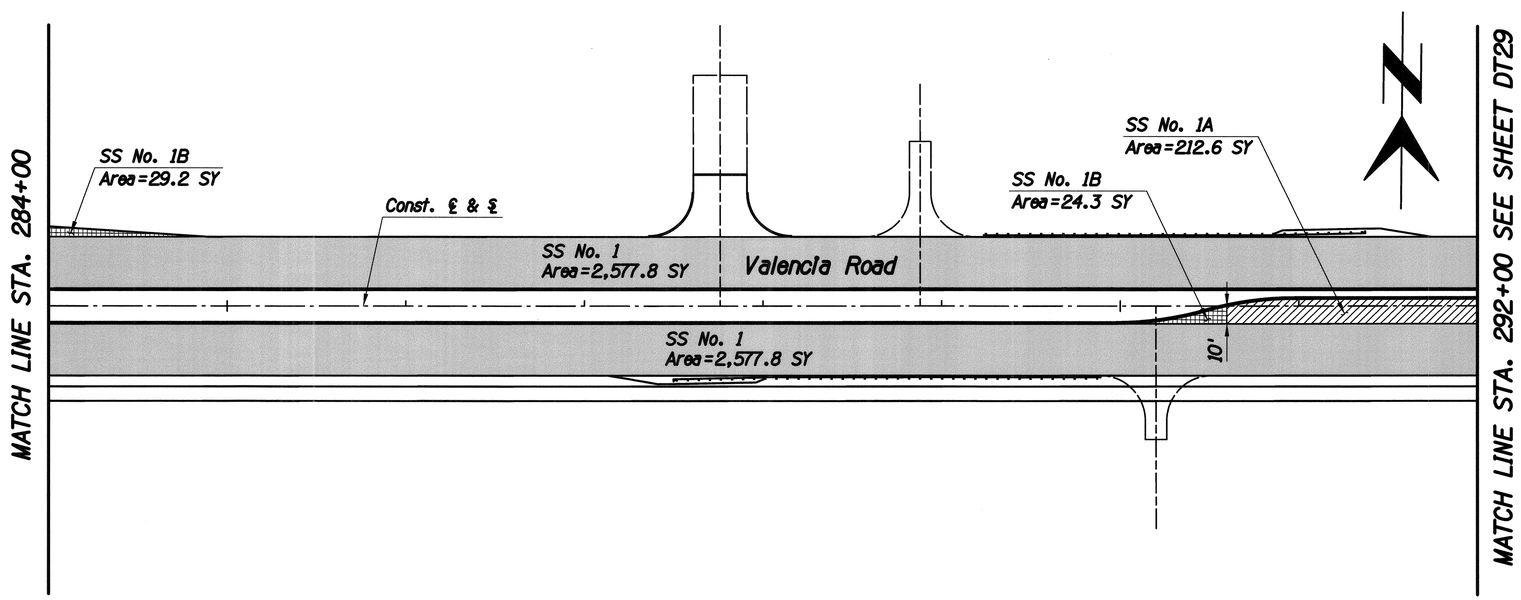

F.H.W.A. REGION	STATE	PROJECT NO.	SHEET NO.	TOTAL SHEETS	AS BUILT
9	ARIZ.	STP-PPM-0(230)A			
		0000 PM PPM SS975 01C			

SHEET TOTALS

Structural Section No. 1	9,428 SY
Structural Section No. 1A	2,819 SY
Structural Section No. 1B	132 SY

For other pavement section quantities, see Side Street Sheets & Paving Plans.

DETAIL T

Sheet 4 of 9

Pavement Placement Limits

SPECIAL DETAILS

No.	Revision Description	Date

		Date
Designed	JMF	03/2014
Drawn	JMF	03/2014
Checked	RDB	03/2014
Proj. Engr.	RDB	03/2014

Priscilla S. Cornelio, P.E., Director

Pima County Department of Transportation

Registered Professional Engineer (Civil) CERTIFICATE NO. 13762 ROBERT DEAN BRITTAIN Date Signed 7-21-14 ARIZONA U.S.A. Expires 3-31-15

HDR Engineering, Inc. 7250 E. Camelback Circle, Suite 530 Scottsdale, AZ 85251-4459 (520) 584-3600

VALENCIA ROAD
WADE ROAD TO MARK ROAD
PROJECT NO. 4RTVMW

Scales: Horiz. 1"=40' Vert. 1"=4'

Sheet DT28 of DT55

TRACS No. SS975 01C

Print Scale: 1:40

Pentable: 152226_PLOTORDR.TBL
Plotdriver: 152226_V8FULL_B&W_PDF.plt

Project ID: 0000000001152226
Client Number: 012145

ProjectWise Directory: Pima_County_Dept_of_Transportation\PCDOT_Valencia_Mtn_Eagle_Mark\13.00_CAD\Construction Documents\Civil\Wade to Mark\17C-03.dgn
Model: B17C26

Printed By: jefrey Date: 7/21/2014 2:15:24 PM

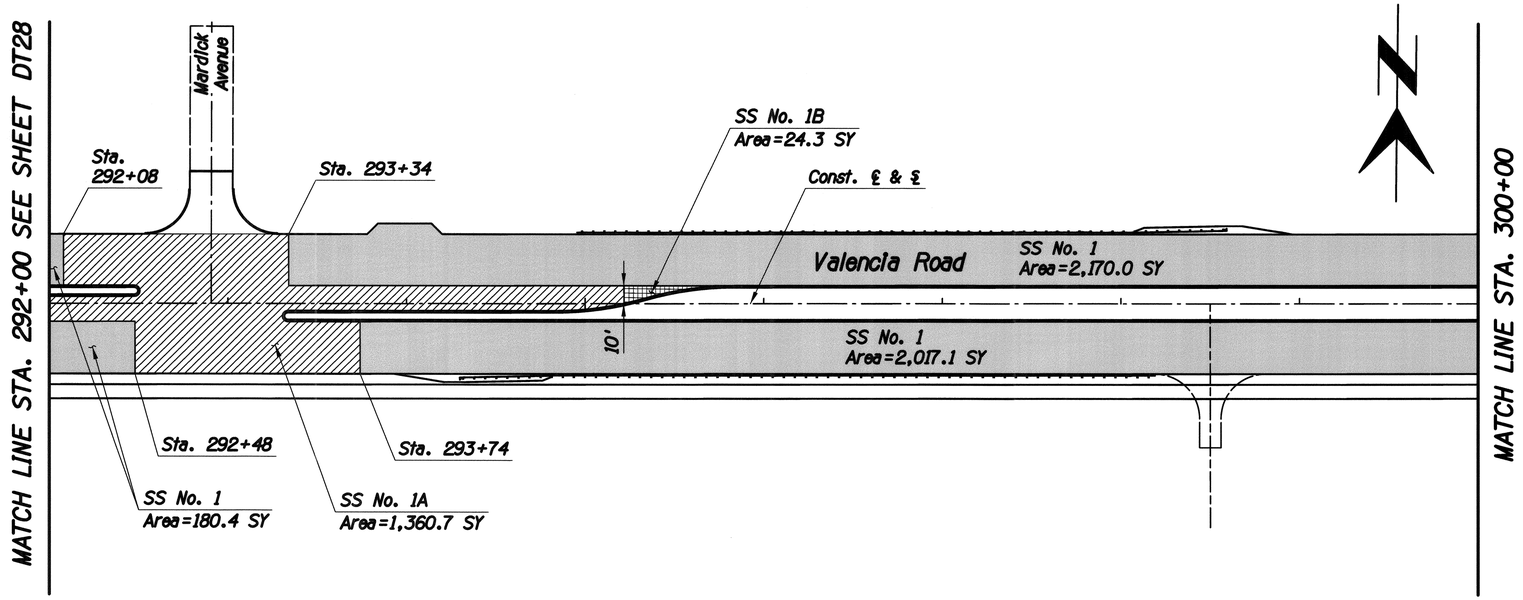

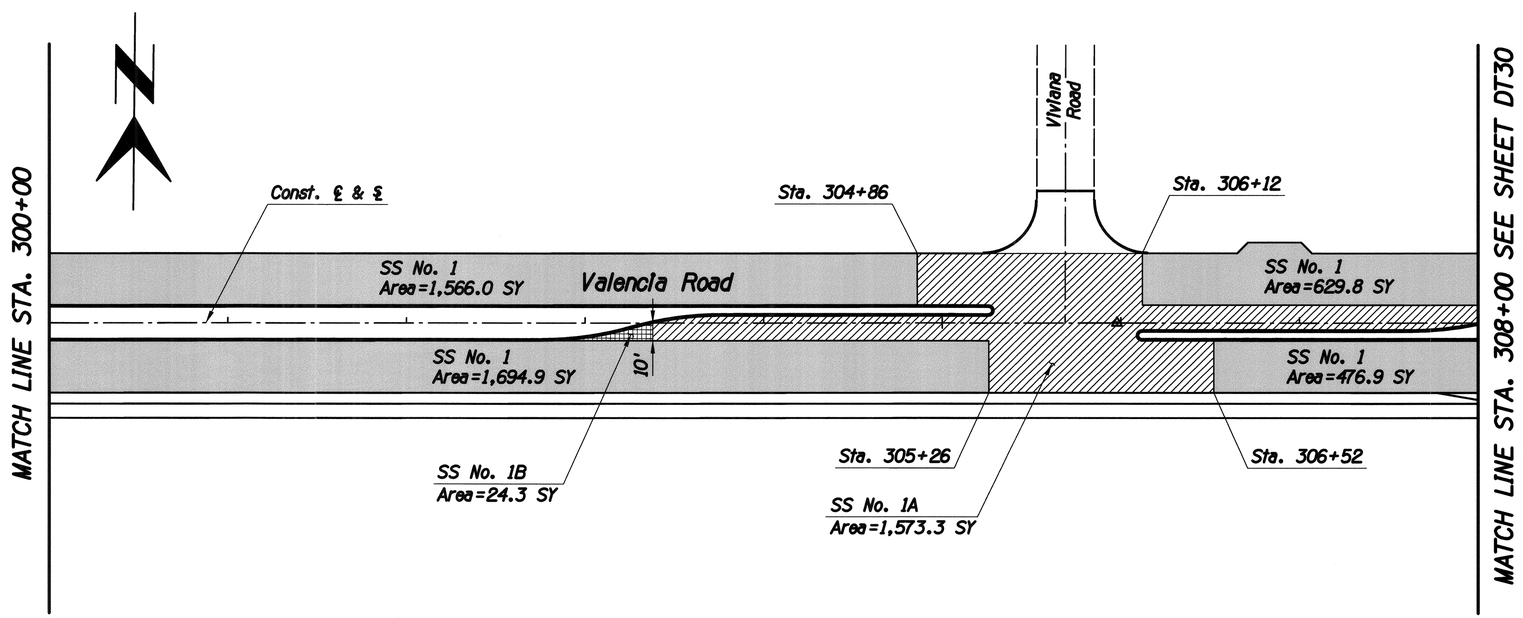

F.H.W.A. REGION	STATE	PROJECT NO.	SHEET NO.	TOTAL SHEETS	AS BUILT
9	ARIZ.	STP-PPM-012301A			
		0000 PM PPM SS975 01C			

SHEET TOTALS

Structural Section No. 1	8,735 SY
Structural Section No. 1A	2,934 SY
Structural Section No. 1B	49 SY

For other pavement section quantities, see Side Street Sheets & Paving Plans.

Priscilla S. Cornelio, P.E., Director

No.	Revision Description	Engineer	Date

		Date
Designed	JMF	03/2014
Drawn	JMF	03/2014
Checked	RDB	03/2014
Proj. Engr.	RDB	03/2014

Registered Professional Engineer (Civil) CERTIFICATE NO. 13762 ROBERT DEAN BRITTAIN Date Signed 7-31-14 ARIZONA U.S.A. Expires 8-31-17

HDR Engineering, Inc.
5210 East Williams Circle, Suite 530
Tucson, AZ 85711-4459
(520) 584-3600

Pima County Department of Transportation

VALENCIA ROAD
WADE ROAD TO MARK ROAD
PROJECT NO. 4RTVMW

DETAIL T

Sheet 5 of 9

Pavement Placement Limits

SPECIAL DETAILS

Scales	Horiz. 1"=40' Vert. 1"=4'	Sheet DT29 of DT55	Page 42 of 281

Project ID: 000000000152226
Client Number: 012145
Pentable: 152226_PLOTORDR.TBL
Plotdriver: 152226_V8FULL_B&W_PDF.plt

ProjectWise Directory: Pima_County_Dept_of_Transportation\PCDOT_Valencia_Mtn_Eagle_Mark\13.00_CAD\Construction Documents\Civil\Wade to Mark\17C-03.dgn
Model: B17C27
Printed By: jefrey
Date: 7/21/2014 2:15:25 PM
Print Scale: 1:40
TRACS No. SS975 01C

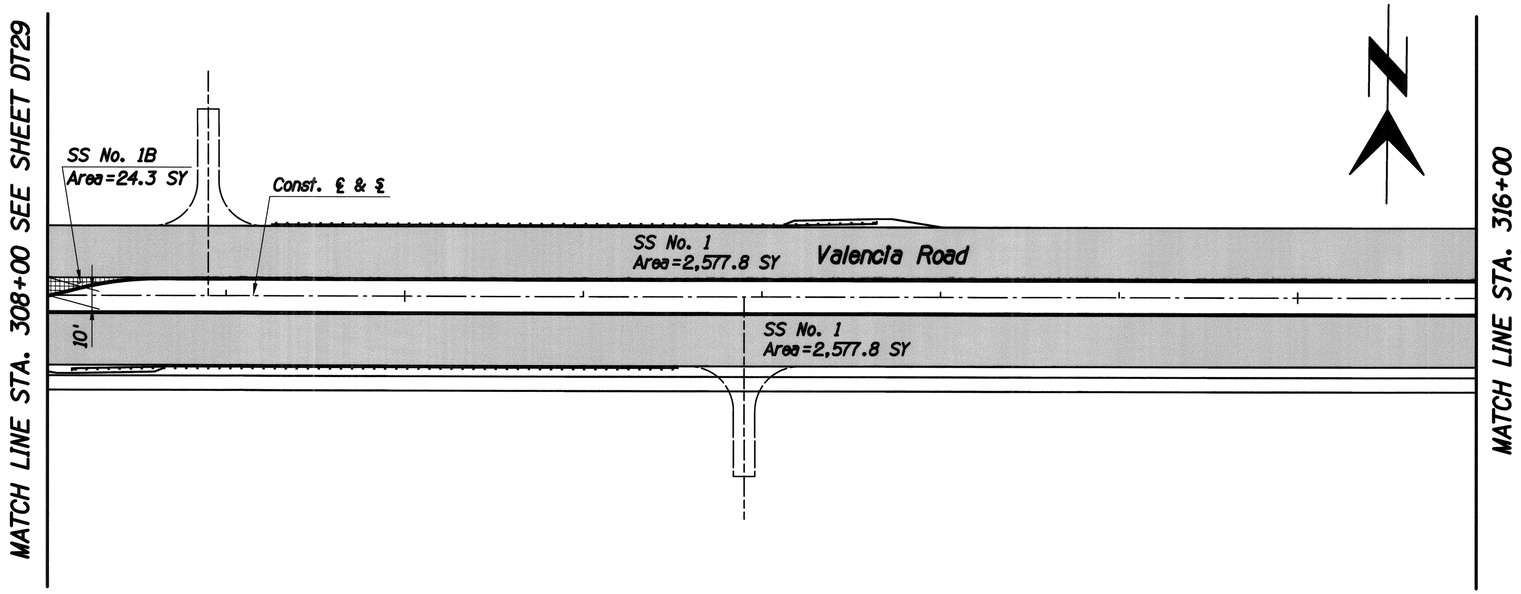

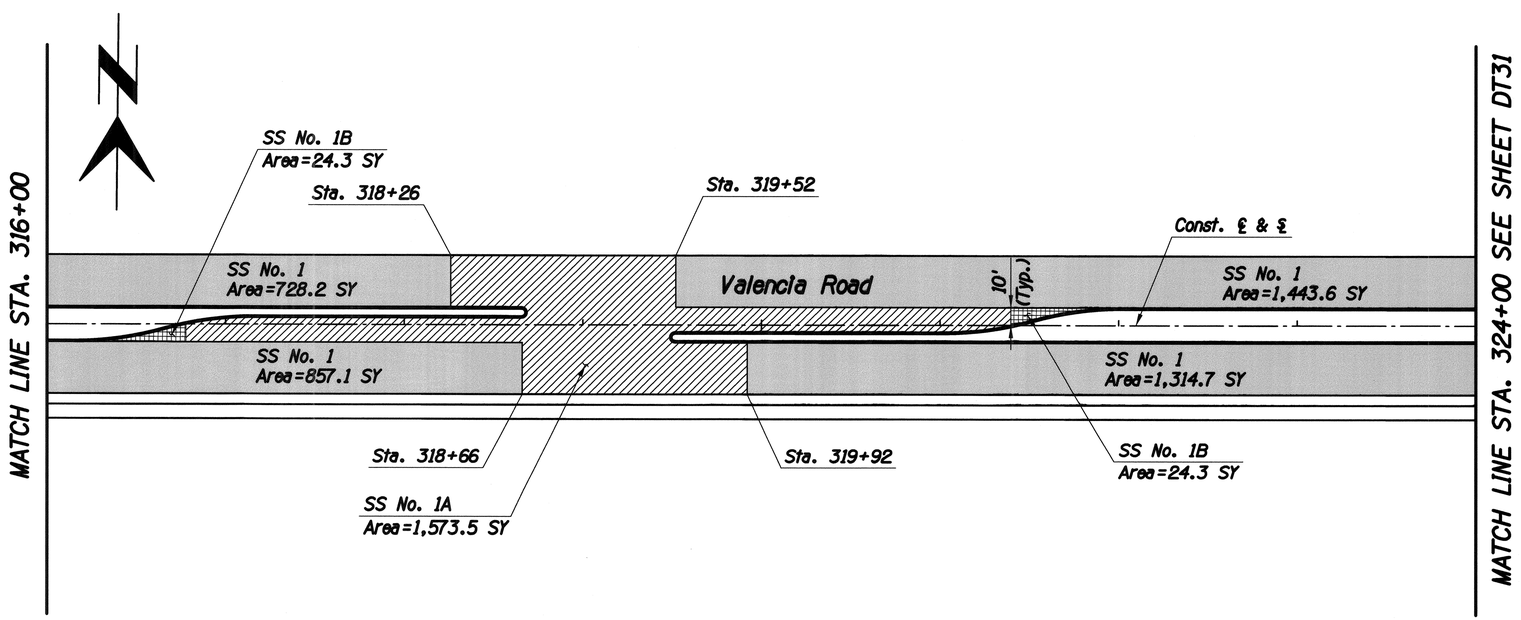

F.H.W.A. REGION	STATE	PROJECT NO.	SHEET NO.	TOTAL SHEETS	AS BUILT
9	ARIZ.	STP-PPM-0(230)A			
		0000 PM PPM SS975 01C			

SHEET TOTALS

Structural Section No. 1	9,499 SY
Structural Section No. 1A	1,574 SY
Structural Section No. 1B	73 SY

For other pavement section quantities, see Side Street Sheets & Paving Plans.

Priscilla S. Cornelio, P.E., Director

No.	Revision Description	Engineer	Date

		Date
Designed	JMF	03/2014
Drawn	JMF	03/2014
Checked	RDB	03/2014
Proj. Engr.	RDB	03/2014

Registered Professional Engineer (Civil) CERTIFICATE NO. 13762 ROBERT DEAN BRITTAIN Date Signed 7-21-14 ARIZONA U.S.A. Expires 3-31-17

HDR Engineering, Inc.
5210 East Williams Circle, Suite 530
Tucson, AZ 85711-4459
(520) 584-3600

Pima County Department of Transportation

VALENCIA ROAD
WADE ROAD TO MARK ROAD
PROJECT NO. 4RTVMW

DETAIL T

Sheet 6 of 9

Pavement Placement Limits

SPECIAL DETAILS

Scales	Horiz. 1"=40' Vert. 1"=4'	Sheet DT30 of DT55	Page 43 of 281

Project ID: 000000000152226
Client Number: 012145
Pentable: 152226_PLOTORDR.TBL
Plotdriver: 152226_V8FULL_B&W_PDF.plt

ProjectWise Directory: Pima_County_Dept_of_Transportation\PCDOT_Valencia_Mtn_Eagle_Mark\13.00_CAD\Construction Documents\Civil\Wade to Mark\17C-03.dgn
Model: B17C28
Printed By: jefrey
Date: 7/21/2014 2:15:27 PM
Print Scale: 1:40
TRACS No. SS975 01C

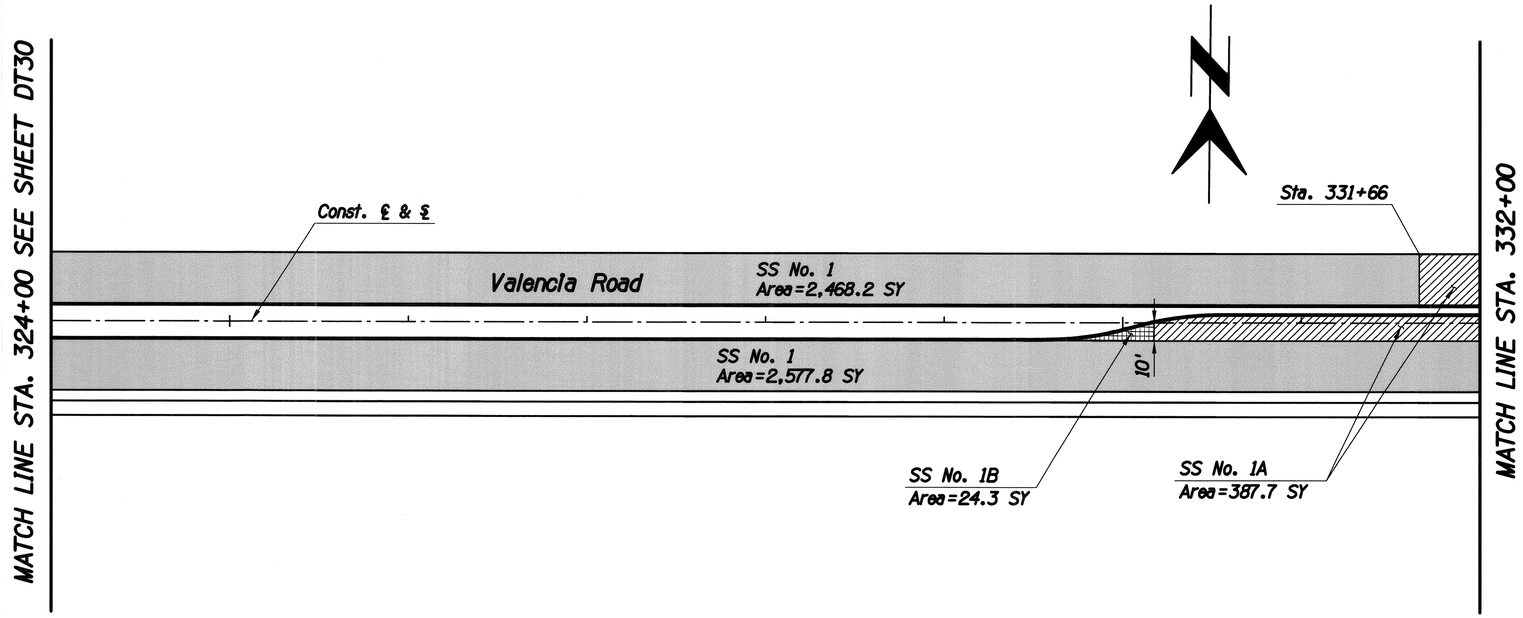

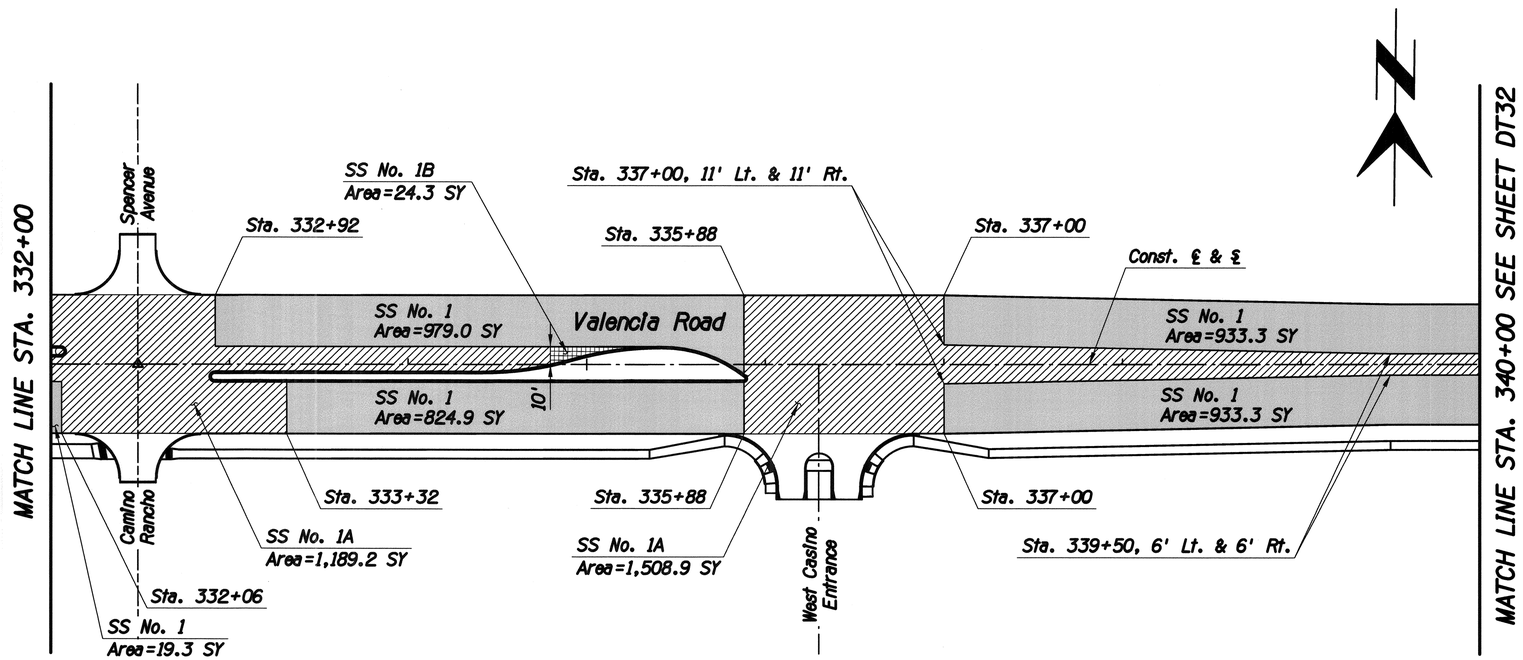

F.H.W.A. REGION	STATE	PROJECT NO.	SHEET NO.	TOTAL SHEETS	AS BUILT
9	ARIZ.	STP-PPM-0(230)A			
		0000 PM PPM SS975 01C			

SHEET TOTALS

Structural Section No. 1	8,736 SY
Structural Section No. 1A	3,086 SY
Structural Section No. 1B	49 SY

For other pavement section quantities, see Side Street Sheets & Paving Plans.

Priscilla S. Cornelio, P.E., Director

Designed	JMF	03/2014
Drawn	JMF	03/2014
Checked	RDB	03/2014
Proj. Engr.	RDB	03/2014

No.	Revision Description	Engineer	Date

Registered Professional Engineer (Civil) CERTIFICATE NO. 13762 ROBERT DEAN BRITTAIN Date Signed 7-21-14 ARIZONA U.S.A.

Expires 3-31-17

HDR Engineering, Inc.
5220 East Williams Circle, Suite 530
Tucson, AZ 85711-4489
(520) 564-3600

Pima County Department of Transportation

VALENCIA ROAD
WADE ROAD TO MARK ROAD
PROJECT NO. 4RTVMW

DETAIL T

Sheet 7 of 9

Pavement Placement Limits

SPECIAL DETAILS

Scales	Horiz. 1"=40' Vert. 1"=4'	Sheet DT31 of DT55	Page 44 of 281

Print Scale: 1:40

TRACS No. SS975 01C

Project ID: 0000000000152226
Client Number: 012145

Pentable: 152226_PLOTORDR.TBL
Plotdriver: 152226_V8FULL_B&W_PDF.plt

ProjectWise Directory: Pima_County_Dept_of_Transportation\PCDOT_Valencia_Mtn_Eagle_Mark\13.00_CAD\Construction Documents\Civil\Wade to Mark\17C-03.dgn
Model: B17C29

Printed By: jefrey Date: 7/21/2014 2:15:28 PM

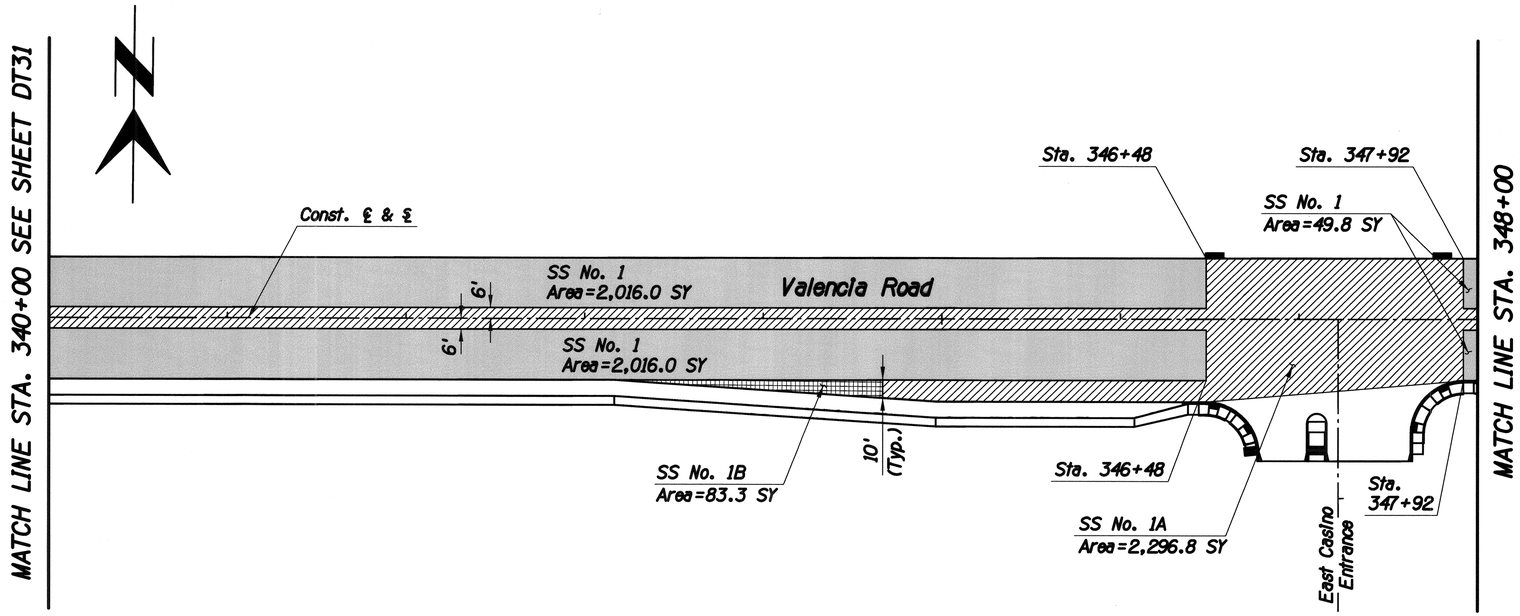

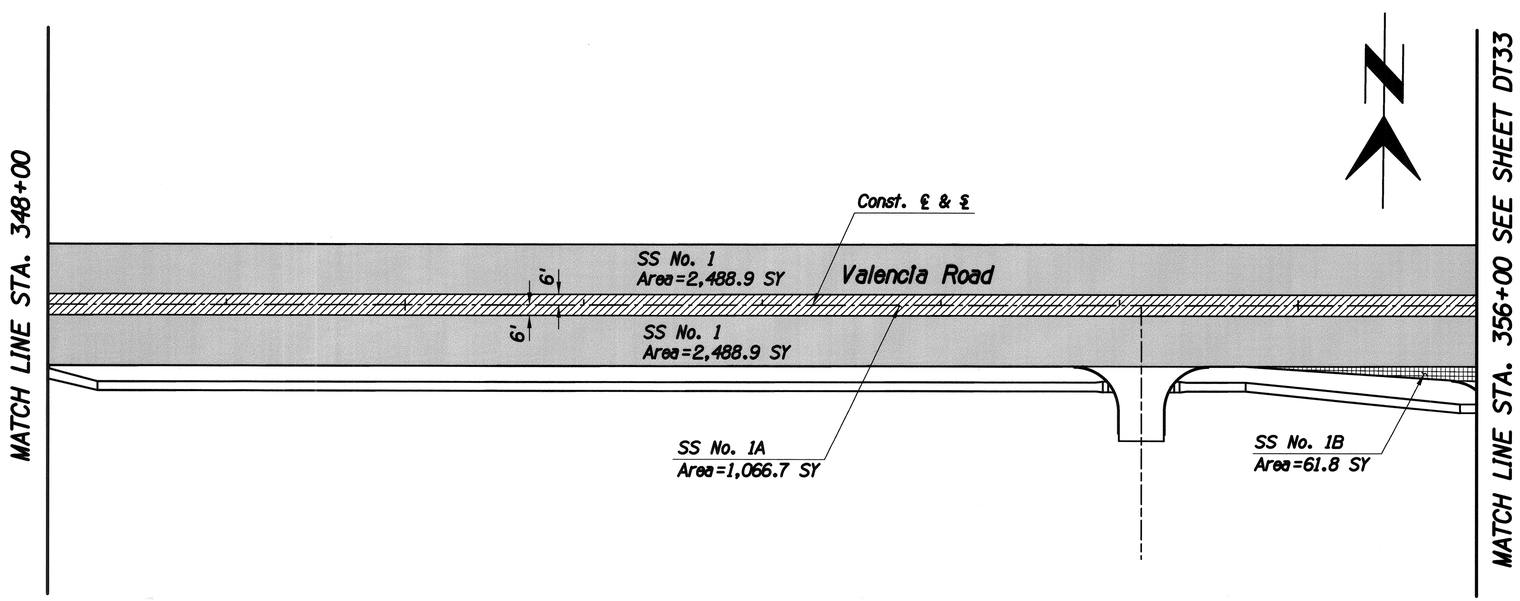

F.H.W.A. REGION	STATE	PROJECT NO.	SHEET NO.	TOTAL SHEETS	AS BUILT
9	ARIZ.	STP-PPM-0(230)A			
		0000 PM PPM SS975 01C			

SHEET TOTALS

Structural Section No. 1	9,060 SY
Structural Section No. 1A	3,363 SY
Structural Section No. 1B	145 SY

For other pavement section quantities, see Side Street Sheets & Paving Plans.

DETAIL T

Sheet 8 of 9

Pavement Placement Limits

SPECIAL DETAILS

Scales	Horiz. 1"=40' Vert. 1"=4'	Sheet DT32 of DT55	Page 45 of 281

Priscilla S. Cornelio, P.E., Director

Pima County Department of Transportation

		Date
Designed	JMF	03/2014
Drawn	JMF	03/2014
Checked	RDB	03/2014
Proj. Engr.	RDB	03/2014

No.	Revision Description	Engineer	Date

Registered Professional Engineer (Civil) CERTIFICATE NO. 13762 ROBERT DEAN BRITTAIN Date Signed 7-21-14 ARIZONA U.S.A. Expires 3-31-15

HDR Engineering, Inc.
5210 East Williams Circle, Suite 530
Tucson, AZ 85711-4459
(520) 584-3600

VALENCIA ROAD
WADE ROAD TO MARK ROAD
PROJECT NO. 4RTVMW

Pentable: 152226_PLOTORDR.TBL
Plotdriver: 152226_V8FULL_B&W_PDF.plt

Project ID: 0000000015226
Client Number: 012145

ProjectWise Directory: Pima_County_Dept_of_Transportation\PCDOT_Valencia_Mtn_Eagle_Mark\13.00_CAD\Construction Documents\Civil\Wade to Mark\17C-03.dgn
Model: B17C30

Printed By: jefrey Date: 7/21/2014 2:15:29 PM

Print Scale: 1:40

TRACS No. SS975 01C

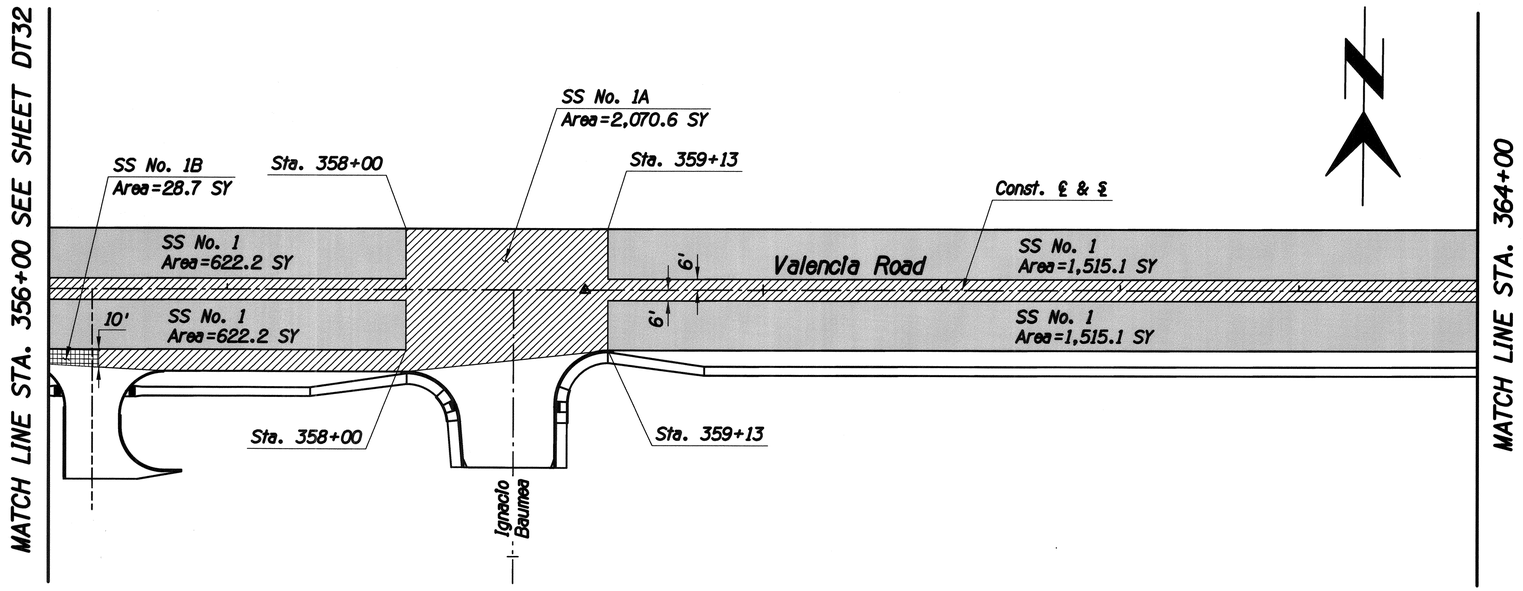

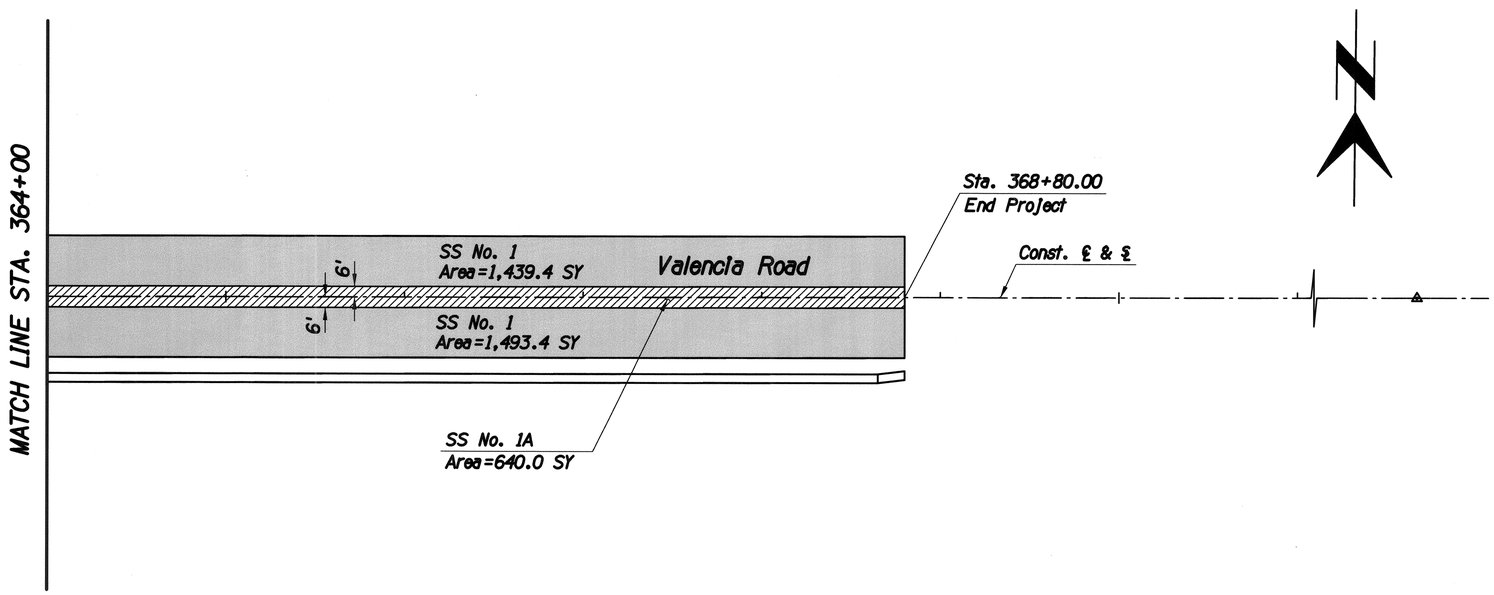

F.H.W.A. REGION	STATE	PROJECT NO.	SHEET NO.	TOTAL SHEETS	AS BUILT
9	ARIZ.	STP-PPM-0(230)A			
		0000 PM PPM SS975 01C			

SHEET TOTALS

Structural Section No. 1	7,261 SY
Structural Section No. 1A	2,711 SY
Structural Section No. 1B	29 SY

For other pavement section quantities, see Side Street Sheets & Paving Plans.

Priscilla S. Cornelio, P.E., Director

No.	Revision Description	Engineer	Date

		Date
Designed	JMF	03/2014
Drawn	JMF	03/2014
Checked	RDB	03/2014
Proj. Engr.	RDB	03/2014

Registered Professional Engineer (Civil) CERTIFICATE NO. 13762 ROBERT DEAN BRITTAIN Date Signed 7-21-14 ARIZONA U.S.A. Expires 3-31-15

HDR Engineering, Inc.
5210 East Williams Circle, Suite 530
Tucson, AZ 85711-4459
(520) 584-3600

Pima County Department of Transportation

VALENCIA ROAD
WADE ROAD TO MARK ROAD
PROJECT NO. 4RTVMW

DETAIL T

Sheet 9 of 9

Pavement Placement Limits

SPECIAL DETAILS

Scales	Horiz. 1"=40' Vert. 1"=4'	Sheet DT33 of DT55	Page 46 of 281

TRACS No. SS975 01C

Pentable: 152226_PLOTORDR.TBL
Plotdriver: 152226_V8FULL_B&W_PDF.plt

Project ID: 0000000015222 6
Client Number: 012145

ProjectWise Directory: Pima_County_Dept_of_Transportation\PCDOT_Valencia_Mtn_Eagle_Mark\13.00_CAD\Construction Documents\Civil\Wade to Mark\17C-03.dgn
Model: B17C31

Printed By: jefrey Date: 7/21/2014 2:15:31 PM

Print Scale: 1:40

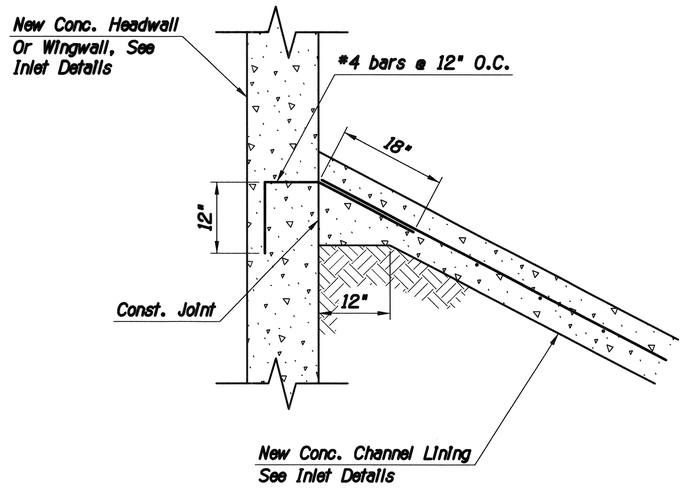

Notes:

1. All Reinforcing Steel Shall Be ASTM A615 Grade 40 or Grade 60.
2. Bank Protection Tie Shall Be Included in the Bid Price for the Concrete Channel Lining. (Bid Item No. 9130100).

DETAIL DA

Bank Protection Tie

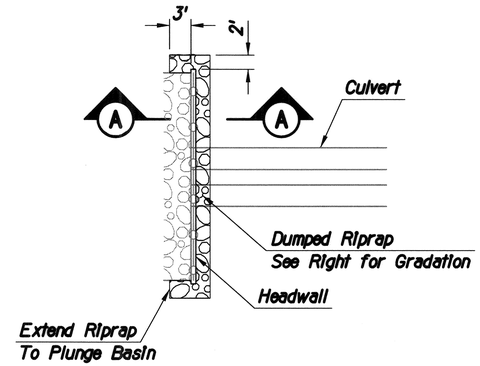

Straight Headwall Treatment
N.T.S.

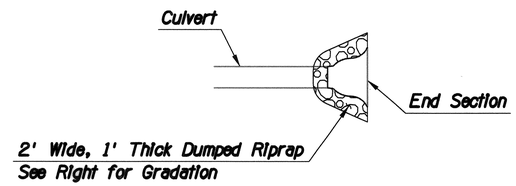

Pipe End Section/Drop Inlet
N.T.S.

Riprap Gradation

% Passing	Size
100-90	12"
85-70	9"
50-30	6"
15-5	4"
5-0	2"

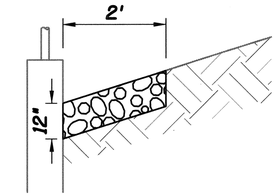

Section A
N.T.S.

Notes:

Detail DB will be paid for under Bid Item No. 9130001, Riprap (Dumped)

DETAIL DB

Riprap Protection for Headwalls & End Sections

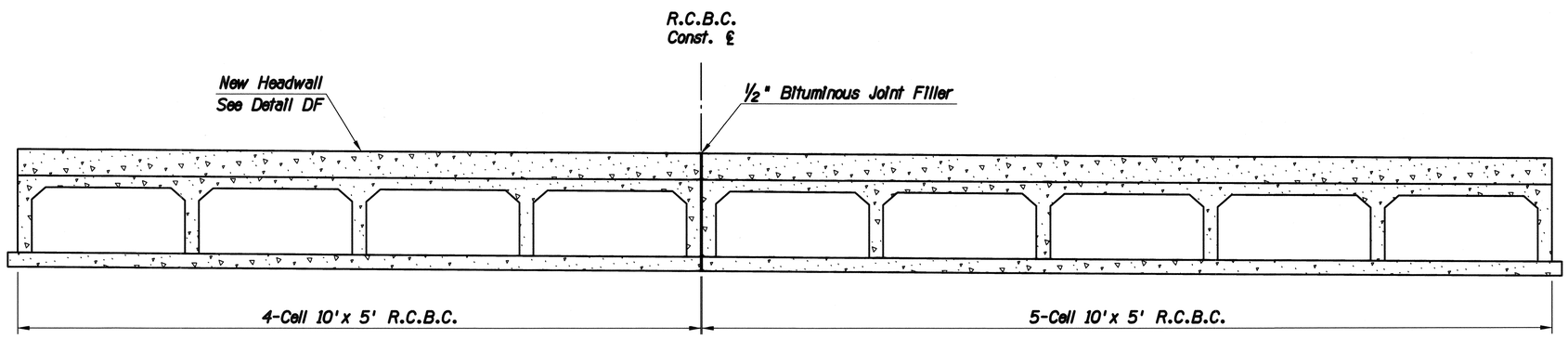

Notes:

1. Box Culverts to be constructed immediately adjacent to each other.
2. Extend joint through headwall.
3. The work shown in this detail will be paid for under Bid Items 6010166 & 6010167 (Box Nos. 6 & 7).

Elevation of Outlet Headwall
N.T.S.

DETAIL DC

Box Culvert Joint Detail

SPECIAL DETAILS

F.H.W.A. REGION	STATE	PROJECT NO.	SHEET NO.	TOTAL SHEETS	AS BUILT
9	ARIZ.	STP-PPM-012301A			
		0000 PM PPM SS975 01C			

Priscilla S. Cornelio, P.E., Director

No.	Revision Description	Engineer	Date

		Date
Designed	JMF	03/2014
Drawn	BJP, JMF	03/2014
Checked	RDB	03/2014
Proj. Engr.	RDB	03/2014

Registered Professional Engineer (Civil) CERTIFICATE NO. 51803 ARTURO B. LEDESMA Date Signed ARIZONA, U.S.A. Expires: 12-31-2016

HDR
HDR Engineering, Inc.
5210 East Williams Circle, Suite 530
Tucson, AZ 85711-4459
(520) 584-3600

Pima County Department of Transportation

VALENCIA ROAD
WADE ROAD TO MARK ROAD
PROJECT NO. 4RTVMW

Scales	Horiz. 1"=NA / Vert. 1"=NA	Sheet DT34 of DT55	Page 47 of 281

Project ID: 0000000000152226
Client Number: 012145
Pentable: 152226_PLOTORDR.TBL
Plotdriver: 152226_V8FULL_B&W_PDF.plt

ProjectWise Directory: Pima_County_Dept_of_Transportation\PCDOT_Valencia_Mtn_Eagle_Mark\13.00_CAD\Construction Documents\Drainage\Wade to Mark\17D-01.dgn
Model: 17D-01
Printed By: jefrey
Date: 7/21/2014 2:15:38 PM
Print Scale: 1:10
TRACS No. SS975 01C

F.H.W.A. REGION	STATE	PROJECT NO.	SHEET NO.	TOTAL SHEETS	AS BUILT
9	ARIZ.	STP-PPM-0(230)A			
		0000 PM PPM SS975 01C			

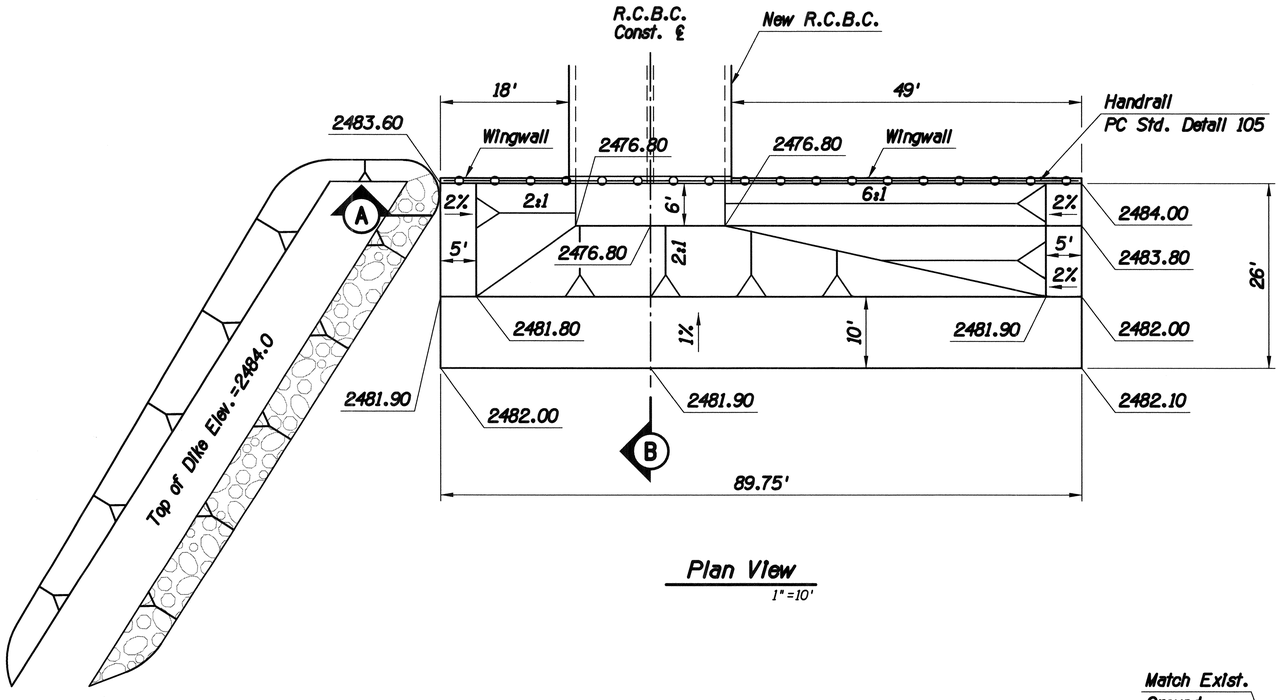

Plan View
1"=10'

Notes:

1. All slopes are nominal. Construct inlet using dimensions and elevations provided.
2. 6:1 slope is for access.
3. The concrete channel lining will be paid for under Item 9130100. The wingwalls will be paid for under Item 6010161 (Box No. 1).

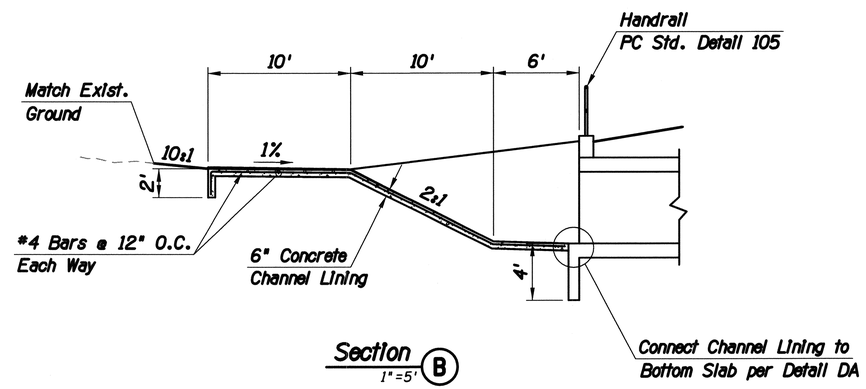

Section B
1"=5'

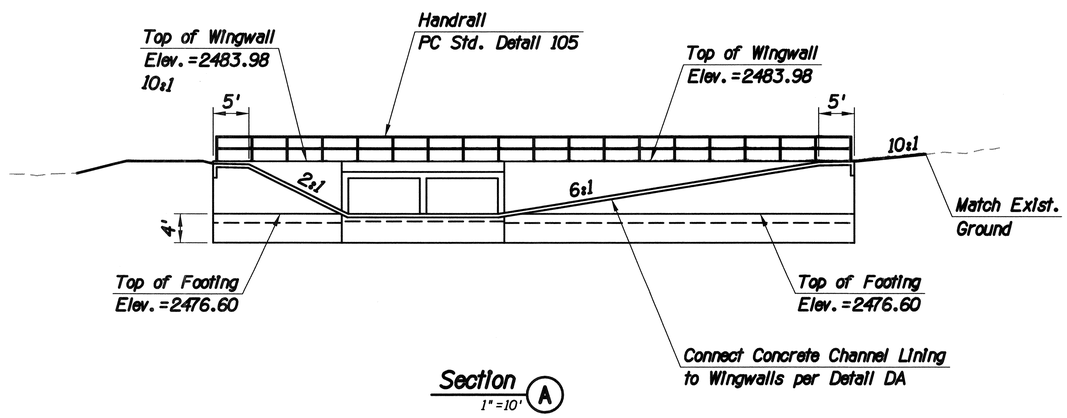

Section A
1"=10'

DETAIL DD1

Inlet Details - Box 1
Station 237+30

SPECIAL DETAILS

No.	Revision Description	Engineer	Date

Priscilla S. Cornelio, P.E., Director

		Date
Designed	JMF	03/2014
Drawn	JMF	03/2014
Checked	RDB	03/2014
Proj. Engr.	RDB	03/2014

Registered Professional Engineer (Civil) CERTIFICATE NO. 51803 ARTURO B. LEDESMA Date Signed ARIZONA, U.S.A. Expires: 12-31-2016

HDR

HDR Engineering, Inc.
5210 East Williams Circle, Suite 530
Tucson, AZ 85711-4459
(520) 584-3600

Pima County Department of Transportation

VALENCIA ROAD
WADE ROAD TO MARK ROAD
PROJECT NO. 4RTVMW

Scales	Horiz. 1"=NA / Vert. 1"=NA	Sheet DT35 of DT55	Page 48 of 281

Project ID: 0000000000152226
Client Number: 012145
Pentable: 152226_PLOTORDR.TBL
Plotdriver: 152226_V8FULL_B&W_PDF.plt

ProjectWise Directory: Pima_County_Dept_of_Transportation\PCDOT_Valencia_Mtn_Eagle_Mark\13.00_CAD\Construction Documents\Drainage\Wade to Mark\17D-01.dgn
Model: 17D-02a
Printed By: jefrey
Date: 7/21/2014 2:15:40 PM
Print Scale: 1:10
TRACS No. SS975 01C

F.H.W.A. REGION	STATE	PROJECT NO.	SHEET NO.	TOTAL SHEETS	AS BUILT
9	ARIZ.	STP-PPM-012301A			
		0000 PM PPM SS975 01C			

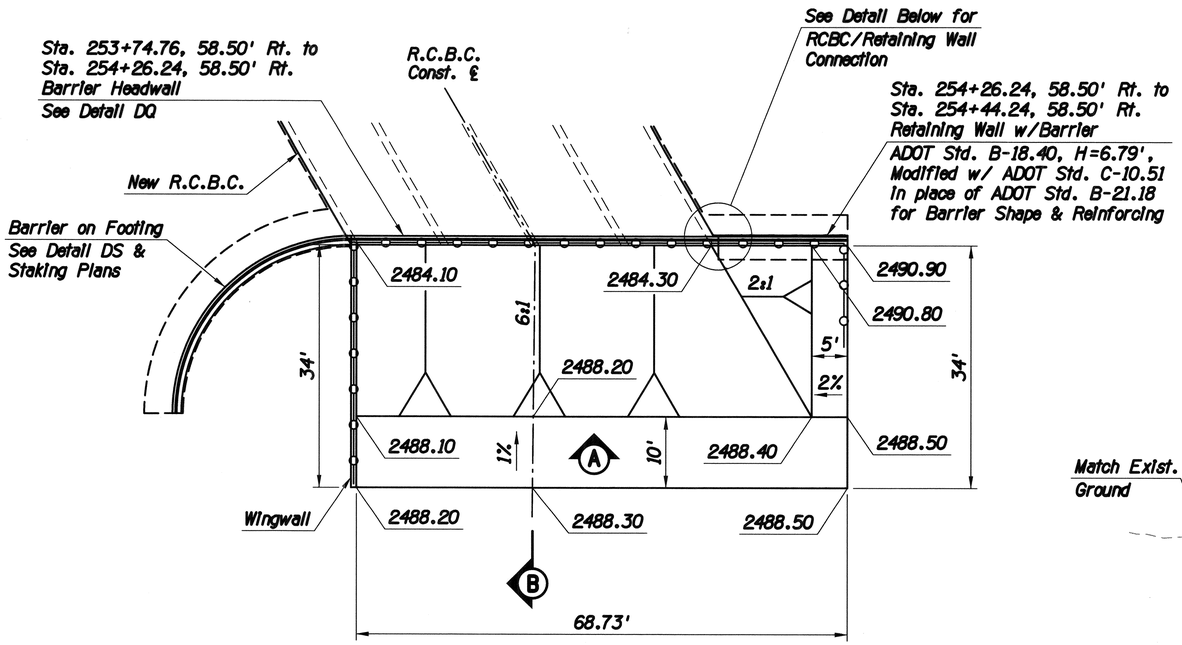

Plan View
1"=10'

Notes:

1. All slopes are nominal. Construct inlet using dimensions and elevations provided.
2. 6:1 slope is for access.
3. The concrete channel lining will be paid for under Item 9130100. The wingwall, barrier headwall and retaining wall with barrier will be paid for under Item 6010162 (Box No. 2).

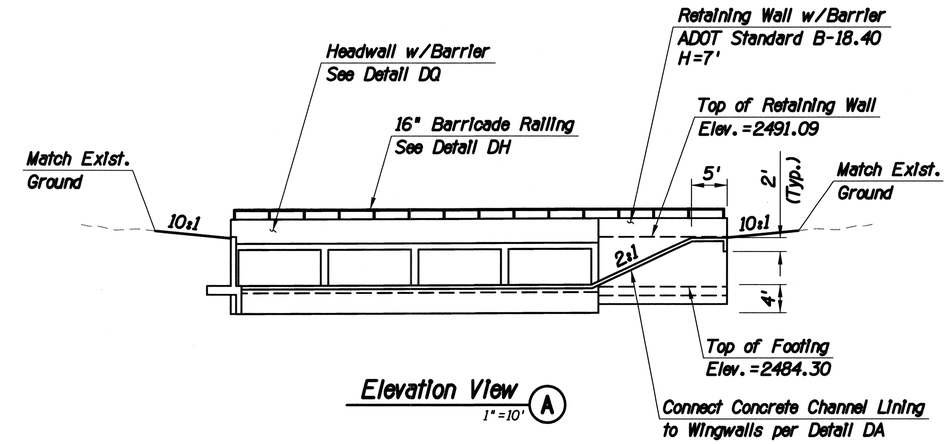

Elevation View (A)
1"=10'

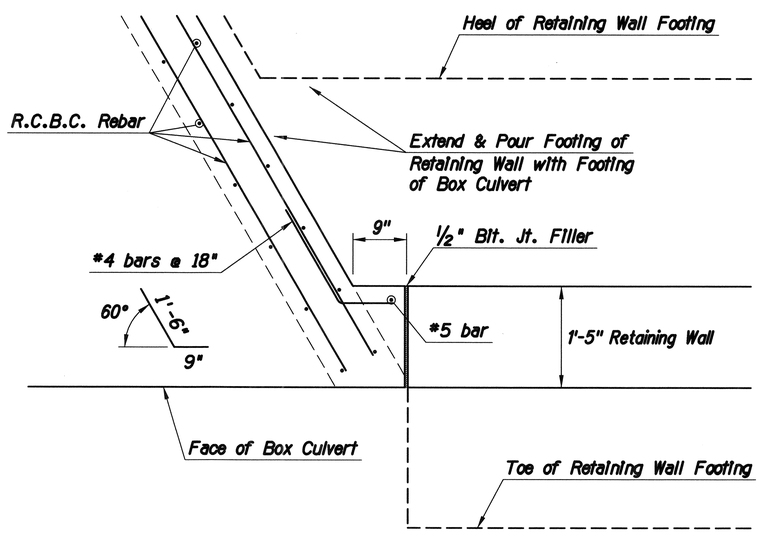

R.C.B.C./Retaining Wall Connection
1"=1'

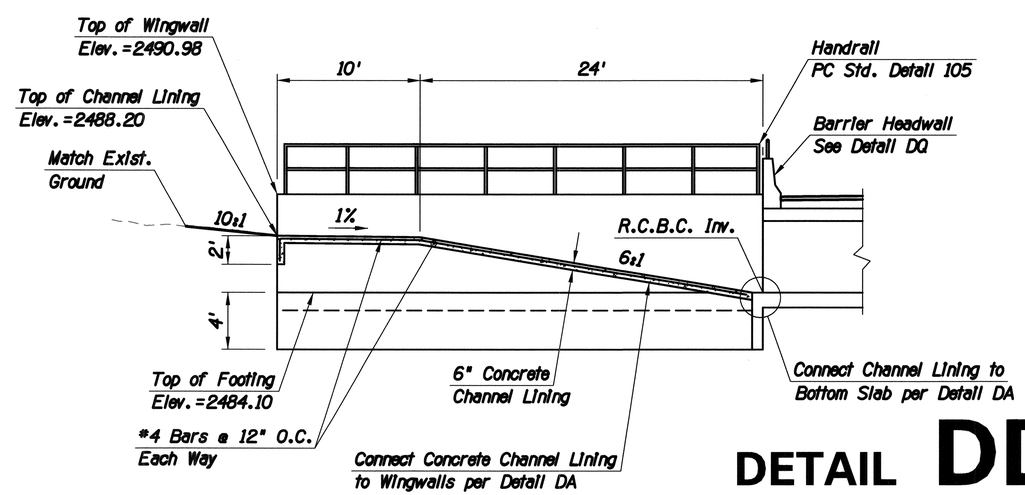

Section (B)
1"=5'

DETAIL DD2

Inlet Details - Box 2
Station 253+66

SPECIAL DETAILS

Priscilla S. Cornelio, P.E., Director

No.	Revision Description	Engineer	Date

		Date
Designed	JMF, ABL	03/2014
Drawn	JMF, ABL	03/2014
Checked	RDB	03/2014
Proj. Engr.	RDB	03/2014

Registered Professional Engineer (Civil)
CERTIFICATE NO. 51803
ARTURO B. LEDESMA
Date Signed
ARIZONA, U.S.A.
Expires: 12-31-2016

HDR
HDR Engineering, Inc.
5210 East Williams Circle, Suite 530
Tucson, AZ 85711-4459
(520) 584-3600

Pima County Department of Transportation

VALENCIA ROAD
WADE ROAD TO MARK ROAD
PROJECT NO. 4RTVMW

Scales	Horiz. 1"=NA / Vert. 1"=NA	Sheet DT36 of DT55	Page 49 of 281

Project ID: 000000000152226
Client Number: 012145
Pentable: 152226_PLOTORDR.TBL
Plotdriver: 152226_V8FULL_B&W_PDF.plt

ProjectWise Directory: Pima_County_Dept_of_Transportation\PCDOT_Valencia_Mtn_Eagle_Mark\13.00_CAD\Construction Documents\Drainage\Wade to Mark\17D-01.dgn
Model: 17D-02b
Printed By: jefrey
Date: 7/21/2014 2:15:42 PM
Print Scale: 1:10
TRACS No. SS975 01C

F.H.W.A. REGION	STATE	PROJECT NO.	SHEET NO.	TOTAL SHEETS	AS BUILT
9	ARIZ.	STP-PPM-01(230)A			
		0000 PM PPM SS975 01C			

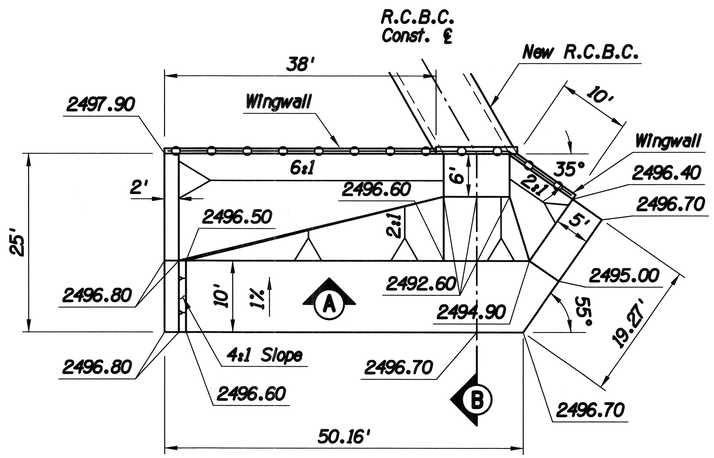

Plan View

1" = 10'

Notes:

1. All slopes are nominal. Construct inlet using dimensions and elevations provided.
2. 6:1 slope is for access.
3. The concrete channel lining will paid for under Item 9130100. The wingalls will be paid for under Item 6010163.

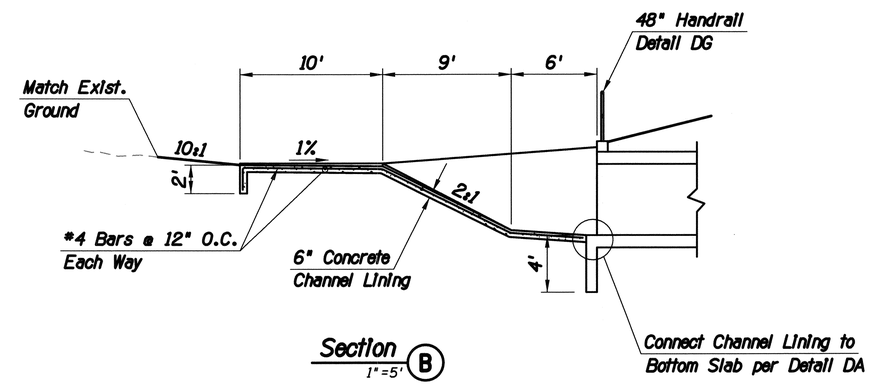

Section B

1" = 5'

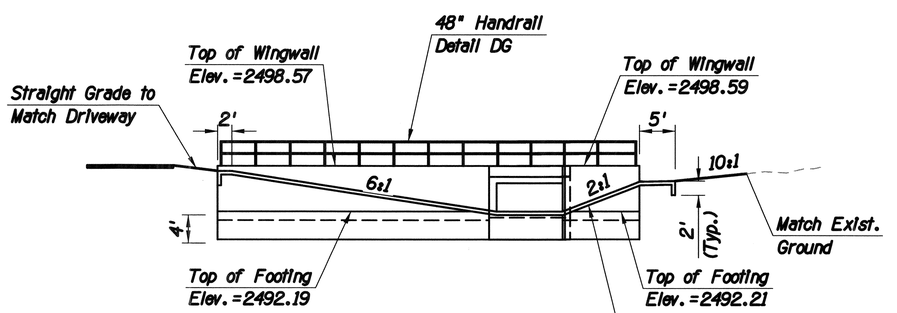

Elevation A

1" = 10'

DETAIL DD3

Inlet Details - Box 3

Station 278+40

SPECIAL DETAILS

No.	Revision Description	Engineer	Date

		Date
Designed	JMF	03/2014
Drawn	JMF	03/2014
Checked	RDB	03/2014
Proj. Engr.	RDB	03/2014

Priscilla S. Cornelio, P.E., Director

Pima County Department of Transportation

HDR Engineering, Inc.
5210 East Williams Circle, Suite 530
Tucson, AZ 85711-4459
(520) 584-3600

VALENCIA ROAD
WADE ROAD TO MARK ROAD
PROJECT NO. 4RTVWW

Scales	Horiz. 1" = NA	Sheet DT37 of DT55	Page 50 of 281
	Vert. 1" = NA		

TRACS No. SS975 01C

Pentable: 152226_PLOTDRDR.TBL
Plotdriver: 152226_V8FULL_B&W_PDF.plt

Project ID: 0000000015222 6
Client Number: 012145

F.H.W.A. REGION	STATE	PROJECT NO.	SHEET NO.	TOTAL SHEETS	AS BUILT
9	ARIZ.	STP-PPM-0(230)A			
		0000 PM PPM SS975 01C			

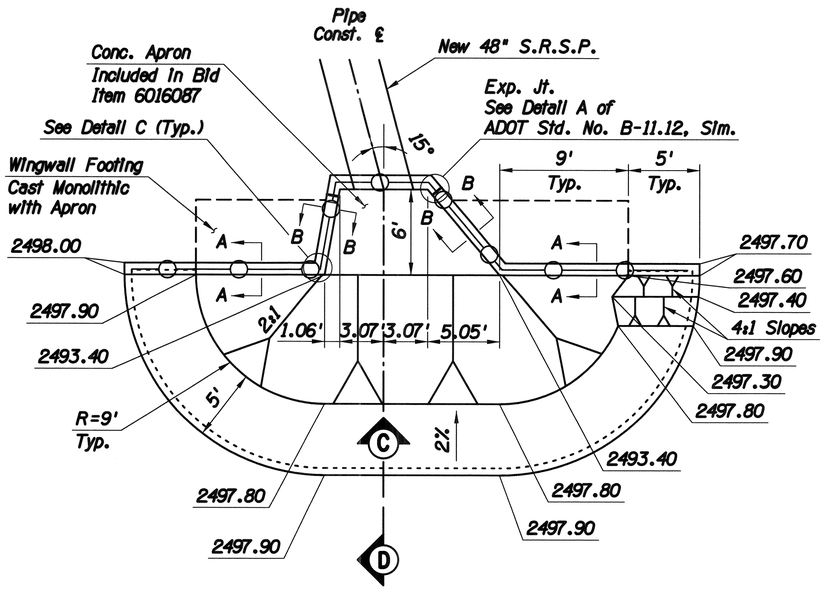

Plan View
1"=5'

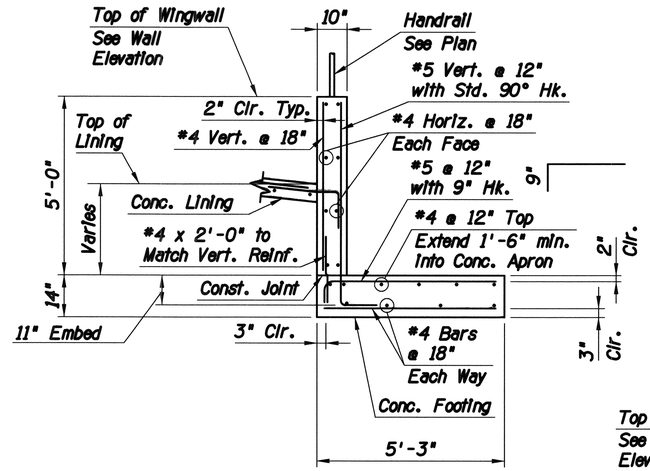

Section A-A
1"=2'

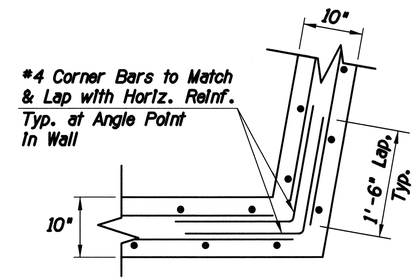

Detail C
1"=1'

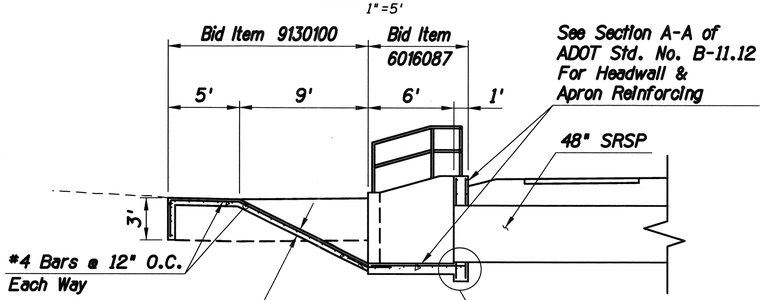

Section D
1"=5'

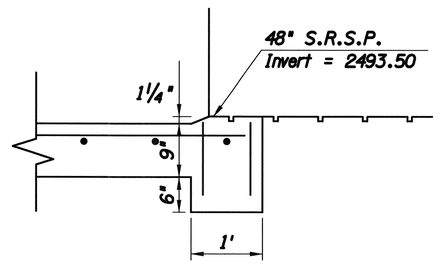

Detail B
1"=1'

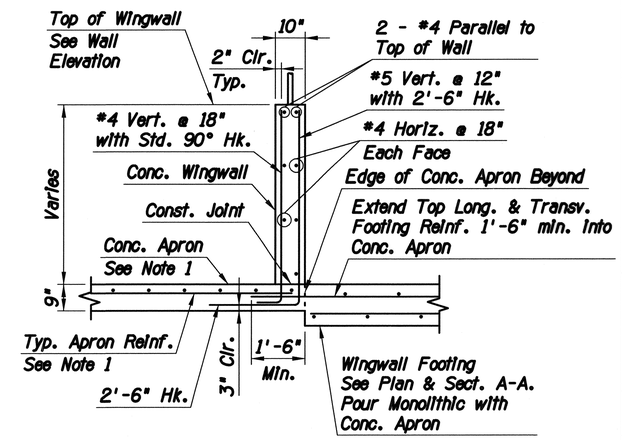

Section B-B
1"=2'

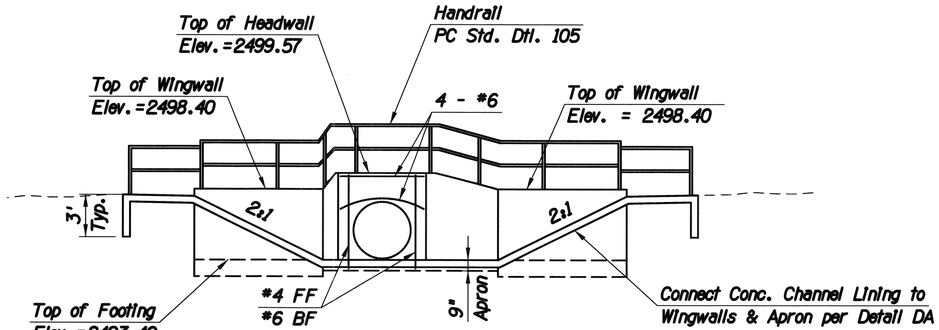

Elevation C
1"=5'

Notes:

1. Construct headwall & apron per ADOT Std. No. B-11.13 modified as shown. E=6', F=5.05', G=1.06', X=5', Z=12.25'
2. All slopes are nominal. Construct inlet using dimensions and elevations provided.
3. All concrete shall be Class B, f'c=2500 psi.
4. Reinforcing steel shall be ASTM A615 Grade 60.
5. All bend dimensions for reinforcing steel shall be to out-to-out of bars.
6. All reinforcing steel shall have 2" of clear cover unless noted otherwise.
7. All exposed corners shall be chamfered ¾" unless noted otherwise.
8. This headwall, the wingwalls, and concrete apron will be paid for under Item No. 6016087.
9. The concrete channel lining will be paid for under Item No. 9130100.

DETAIL DD4

Inlet Details - Pipe 7

Station 281+75

SPECIAL DETAILS

Scales	Horiz. 1"=NA	Sheet DT38 of DT55	Page 51 of 281
	Vert. 1"=NA		

TRACS No. SS975 01C

Designed	ABL, TWB	03/2014
Drawn	ABL, JMF	03/2014
Checked	RDB	03/2014
Proj. Engr.	RDB	03/2014

Date / Engineer / Revision Description / No.

Priscilla S. Cornelio, P.E., Director

Pima County Department of Transportation

HDR Engineering, Inc. 5210 East Williams Circle, Suite 530 Tucson, AZ 85711-4459 (520) 584-3600

VALENCIA ROAD WADE ROAD TO MARK ROAD PROJECT NO. 4RTVMW

Pentable: 152226_PLOTORDR.TBL
Plotdriver: 152226_V8FULL_B&W_PDF.plt

Project ID: 0000000000152226
Client Number: 012145

ProjectWise Directory: Pima_County_Dept_of_Transportation\PCDOT_Valencia_Mtn_Eagle_Mark\13.00_CAD\Construction Documents\Drainage\Wade to Mark\17D-01.dgn
Model: 17D-02d

Printed By: jefrey Date: 7/21/2014 2:15:46 PM Print Scale: 1:5

F.H.W.A. REGION	STATE	PROJECT NO.	SHEET NO.	TOTAL SHEETS	AS BUILT
9	ARIZ.	STP-PPM-01230IA			
		0000 PM PPM SS975 01C			

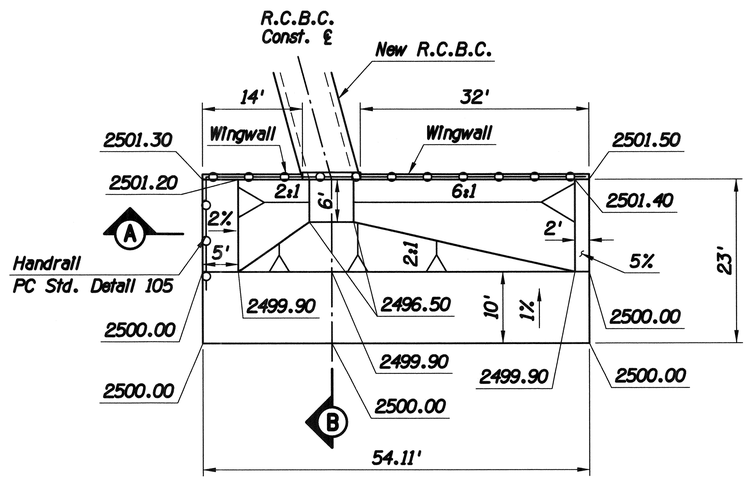

Plan View
1"=10'

Notes:

1. All slopes are nominal. Construct inlet using dimensions and elevations provided.
2. 6:1 slope is for access.
3. The concrete channel lining will be paid for under Item 9130100. The wingwalls will be paid for under Item 6010165 (Box No. 5).

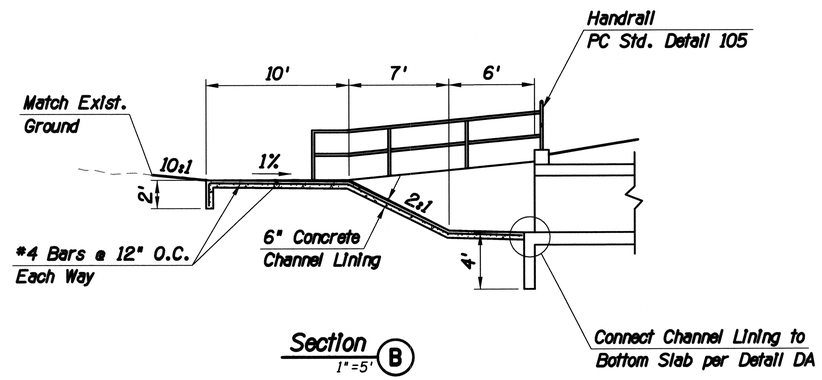

Section B
1"=5'

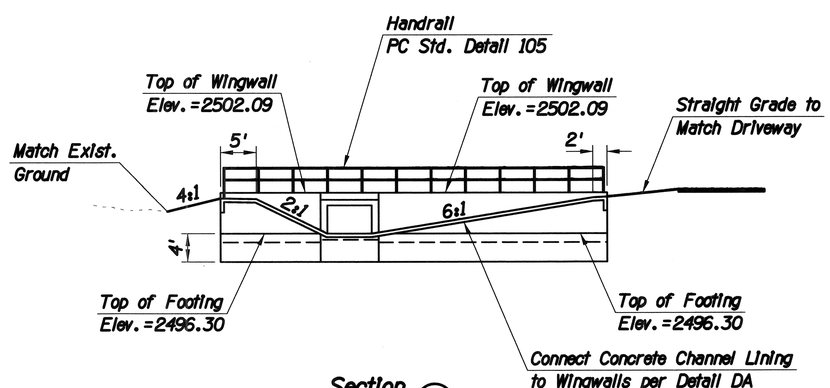

Section A
1"=10'

DETAIL DD5

Inlet Details - Box 5
Station 289+55

SPECIAL DETAILS

Priscilla S. Cornelio, P.E., Director

No.	Revision Description	Engineer	Date

		Date
Designed	JMF	03/2014
Drawn	JMF	03/2014
Checked	RDB	03/2014
Proj. Engr.	RDB	03/2014

Pima County Department of Transportation

HDR Engineering, Inc.
5210 East Williams Circle, Suite 530
Tucson, AZ 85711-4459
(520) 584-3600

VALENCIA ROAD
WADE ROAD TO MARK ROAD
PROJECT NO. 4RTVMW

Scales	Horiz. 1"=NA / Vert. 1"=NA	Sheet DT39 of DT55	Page 52 of 281

Project ID: 0000000000152226
Client Number: 012145
Pentable: 152226_PLOTORDR.TBL
Plotdriver: 152226_V8FULL_B&W_PDF.plt

ProjectWise Directory: Pima_County_Dept_of_Transportation\PCDOT_Valencia_Mtn_Eagle_Mark\13.00_CAD\Construction Documents\Drainage\Wade to Mark\17D-01.dgn
Model: 17D-02e
Printed By: jefrey
Date: 7/21/2014 2:15:48 PM
Print Scale: 1:10
TRACS No. SS975 01C

F.H.W.A. REGION	STATE	PROJECT NO.	SHEET NO.	TOTAL SHEETS	AS BUILT
9	ARIZ.	STP-PPM-0(230)A			
		0000 PM PPM SS975 01C			

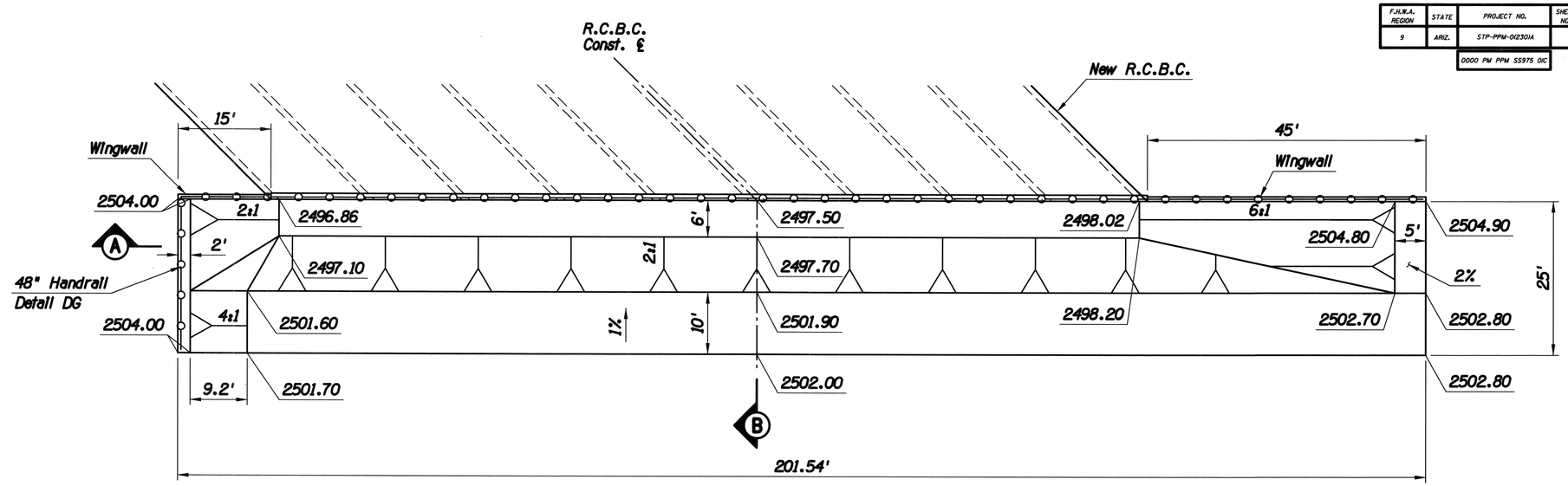

Plan View

1"=10'

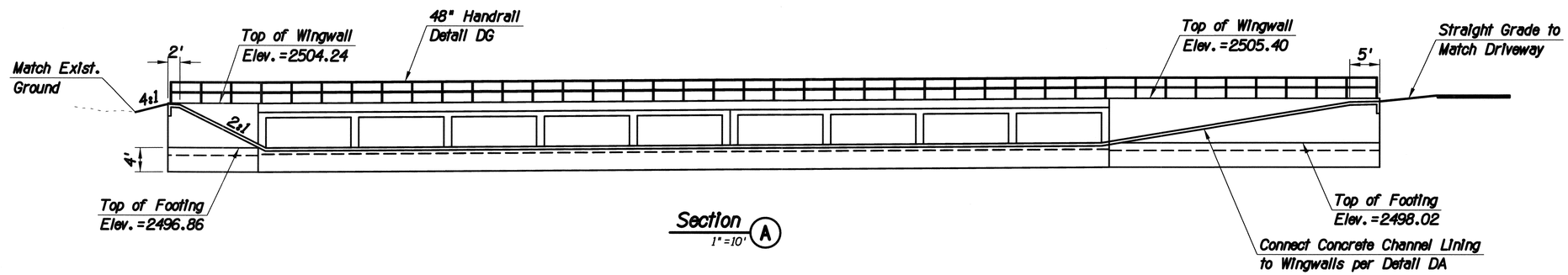

Section A

1"=10'

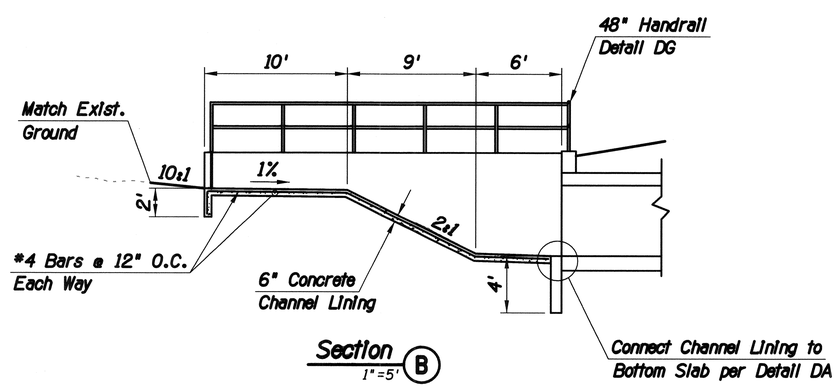

Section B

1"=5'

Notes:

1. All slopes are nominal. Construct inlet using dimensions and elevations provided.
2. 6:1 slope is for access.
3. The concrete channel lining will be paid for under Item 9130100. The wingwalls will be paid for under Item 6010166 (Box No. 6).

DETAIL DD6

Inlet Details - Box 6

Station 296+70

SPECIAL DETAILS

No.	Revision Description	Engineer	Date

		Date
Designed	JMF	03/2014
Drawn	JMF	03/2014
Checked	RDB	03/2014
Proj. Engr.	RDB	03/2014

Priscilla S. Cornelio, P.E., Director

Pima County Department of Transportation

Registered Professional Engineer (Civil) CERTIFICATE NO. 51803 ARTURO G. LEDESMA Date Signed 12-31-2014 ARIZONA, U.S.A. Expires: 12-31-2016

HDR Engineering, Inc.
5210 East Williams Circle, Suite 530
Tucson, AZ 85711-4459
(520) 584-3600

VALENCIA ROAD
WADE ROAD TO MARK ROAD
PROJECT NO. 4RTVMW

Scales	Horiz. 1"=NA	Sheet DT40 of DT55	Page 53 of 281
	Vert. 1"=NA		

TRACS No. SS975 01C

Pentable: 152226_PLOTORDR.TBL
Plotdriver: 152226_V8FULL_B&W_PDF.plt

Project ID: 0000000015226
Client Number: 012145

ProjectWise Directory: Pima_County_Dept_of_Transportation\PCDOT_Valencia_Mtn_Eagle_Mark\13.00_CAD\Construction Documents\Drainage\Wade to Mark\17D-01.dgn
Model: 17D-02f

Printed By: jefrey Date: 7/21/2014 2:15:50 PM

Print Scale: 1:10

F.H.W.A. REGION	STATE	PROJECT NO.	SHEET NO.	TOTAL SHEETS	AS BUILT
9	ARIZ.	STP-PPM-0(230)A			
		0000 PM PPM SS975 01C			

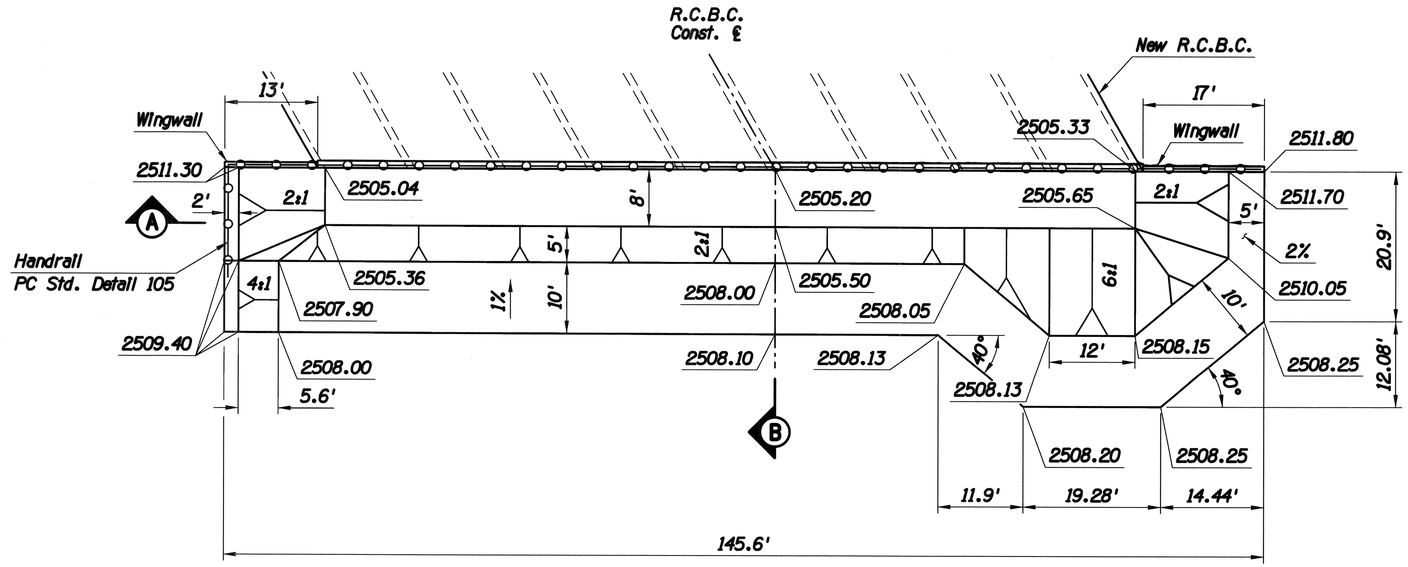

Plan View
1"=10'

Notes:

1. All slopes are nominal. Construct inlet using dimensions and elevations provided.
2. 6:1 slope is for access.
3. The concrete channel lining will be paid for under Item 9130100. The wingwalls will be paid for under Item 6010167 (Box No. 7).

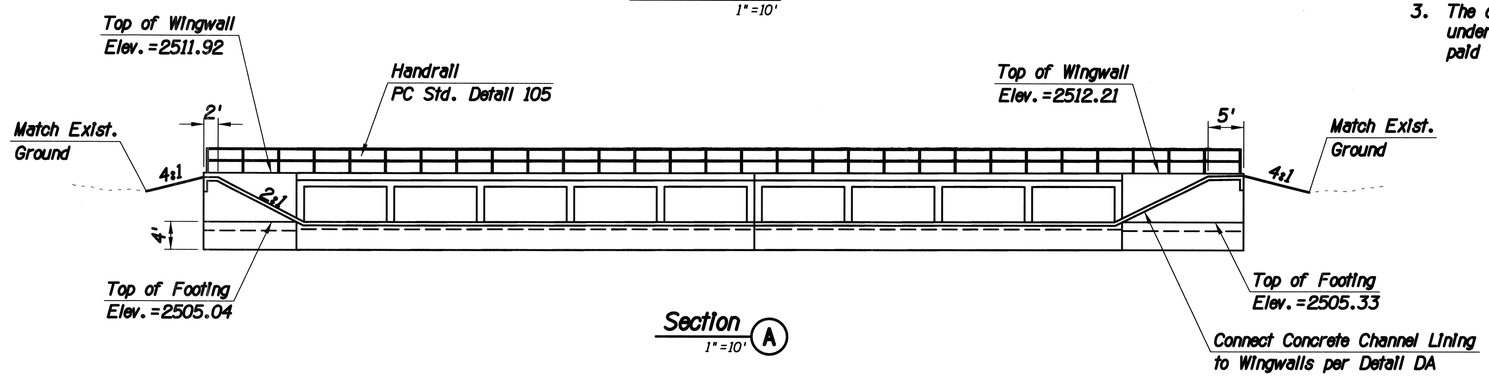

Section (A)
1"=10'

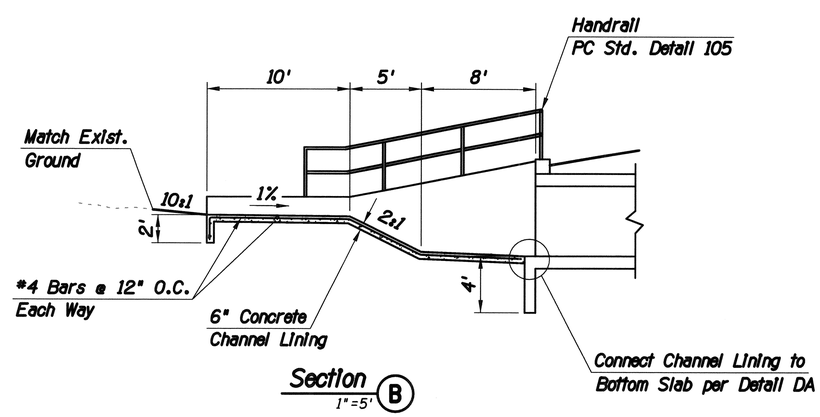

Section (B)
1"=5'

DETAIL DD7

Inlet Details - Box 7
Station 310+50

SPECIAL DETAILS

Priscilla S. Cornelio, P.E., Director

No.	Revision Description	Engineer	Date

		Date
Designed	JMF	03/2014
Drawn	JMF	03/2014
Checked	RDB	03/2014
Proj. Engr.	RDB	03/2014

Registered Professional Engineer (Civil) No. 51803 ARTURO B. LEDESMA Date Signed ARIZONA, U.S.A. Expires: 12-31-2016

HDR Engineering, Inc.
5210 East Williams Circle, Suite 530
Tucson, AZ 85711-4459
(520) 584-3600

Pima County Department of Transportation

VALENCIA ROAD
WADE ROAD TO MARK ROAD
PROJECT NO. 4RTVMW

Scales	Horiz. 1"=NA / Vert. 1"=NA	Sheet DT41 of DT55	Page 54 of 281

Project ID: 0000000000152226
Client Number: 012145
Pentable: 152226_PLOTORDR.TBL
Plotdriver: 152226_V8FULL_B&W_PDF.plt

ProjectWise Directory: Pima_County_Dept_of_Transportation\PCDOT_Valencia_Mtn_Eagle_Mark\13.00_CAD\Construction Documents\Drainage\Wade to Mark\17D-01.dgn
Model: 17D-02g
Printed By: jefrey
Date: 7/21/2014 2:15:51 PM
Print Scale: 1:10
TRACS No. SS975 01C

F.H.W.A. REGION	STATE	PROJECT NO.	SHEET NO.	TOTAL SHEETS	AS BUILT
9	ARIZ.	STP-PPM-012301A			
		0000 PM PPM SS975 01C			

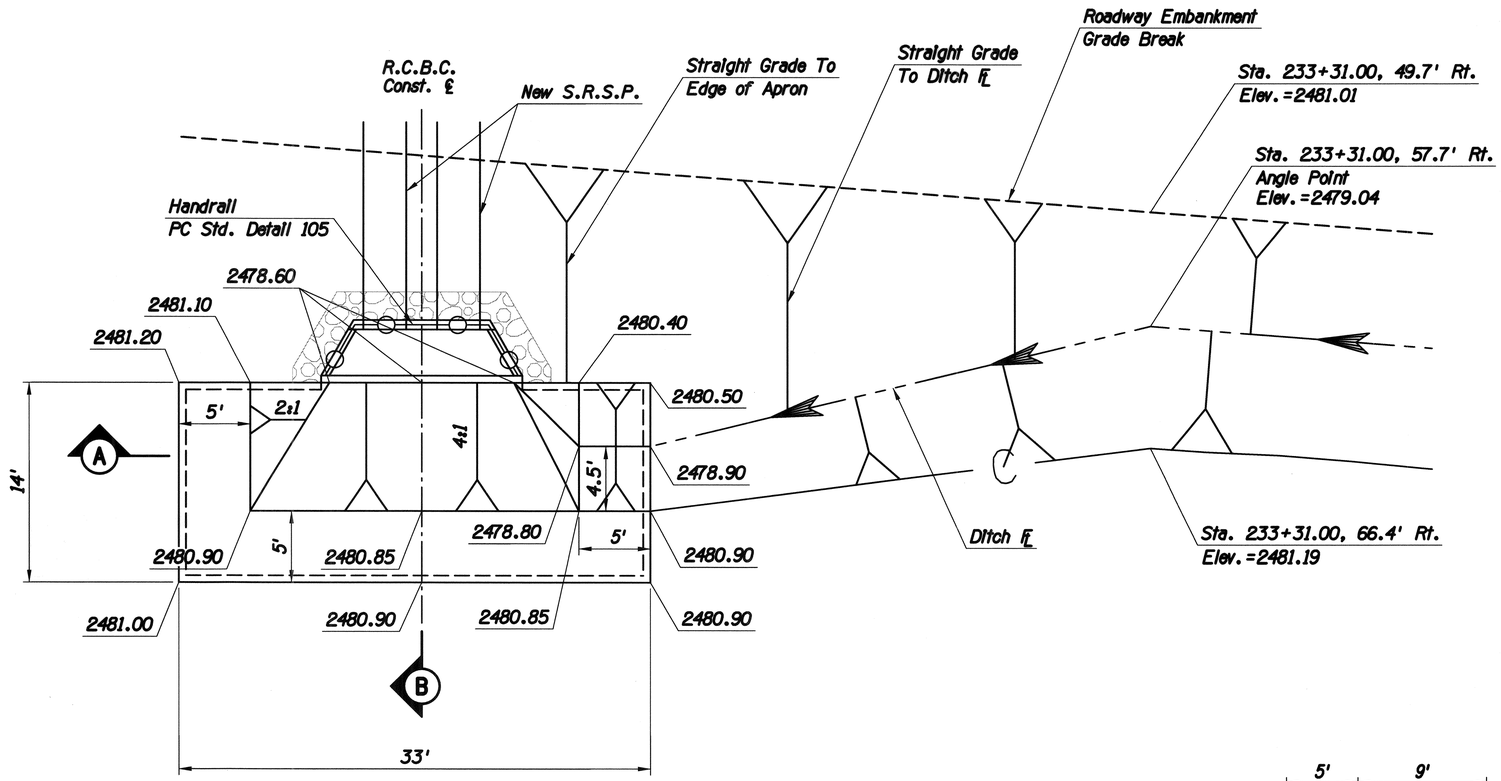

Plan View
1"=5'

Notes:

1. All slopes are nominal. Construct inlet using dimensions and elevations provided.
2. This drop inlet will be paid for under Item 5030182. The concrete channel lining will be paid for under Item 9130100.

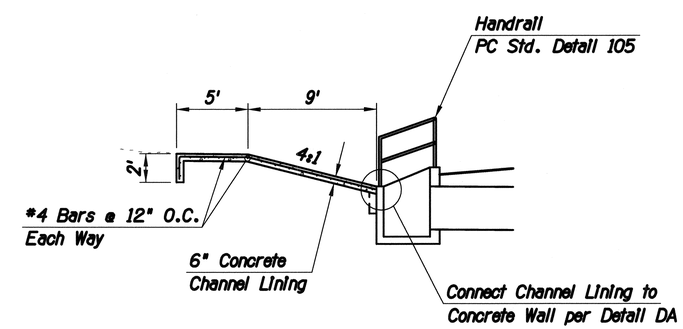

Section B
1"=5'

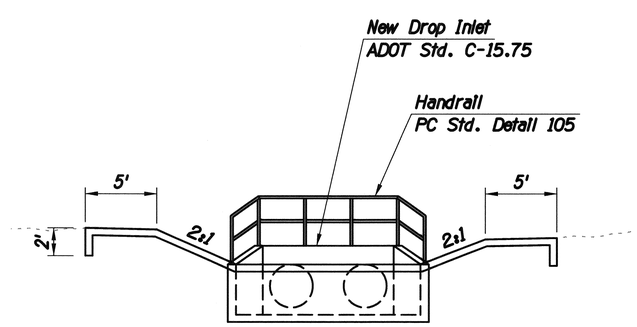

Section A
1"=5'

DETAIL DD8

Inlet Details - Pipe 1
Station 232+80

SPECIAL DETAILS

Priscilla S. Cornelio, P.E., Director

No.	Revision Description	Engineer	Date

		Date
Designed	JMF	03/2014
Drawn	JMF	03/2014
Checked	RDB	03/2014
Proj. Engr.	RDB	03/2014

Registered Professional Engineer (Civil) 51803 ARTURO B. LEDESMA Date Signed ARIZONA, U.S.A. Expires: 12-31-2016

HDR
HDR Engineering, Inc.
5210 East Williams Circle, Suite 530
Tucson, AZ 85711-4459
(520) 584-3600

Pima County Department of Transportation

VALENCIA ROAD
WADE ROAD TO MARK ROAD
PROJECT NO. 4RTVMW

Scales	Horiz. 1"=NA / Vert. 1"=NA	Sheet DT42 of DT55	Page 55 of 281

Project ID: 0000000000152226
Client Number: 012145
Pentable: 152226_PLOTORDR.TBL
Plotdriver: 152226_V8FULL_B&W_PDF.plt

ProjectWise Directory: Pima_County_Dept_of_Transportation\PCDOT_Valencia_Mtn_Eagle_Mark\13.00_CAD\Construction Documents\Drainage\Wade to Mark\17D-01.dgn
Model: 17D-02h
Printed By: jefrey
Date: 7/21/2014 2:15:53 PM
Print Scale: 1:5
TRACS No. SS975 01C

F.H.W.A. REGION	STATE	PROJECT NO.	SHEET NO.	TOTAL SHEETS	AS BUILT
9	ARIZ.	STP-PPM-0(230)A			
		0000 PM PPM SS975 01C			

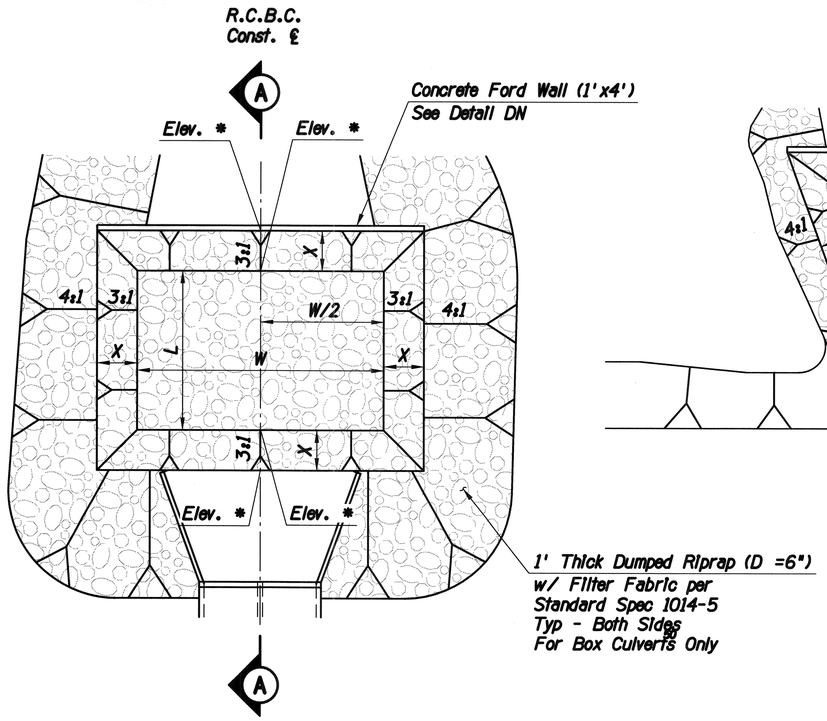

Plan View - ① ⟨2⟩ ⟨4⟩
N.T.S.

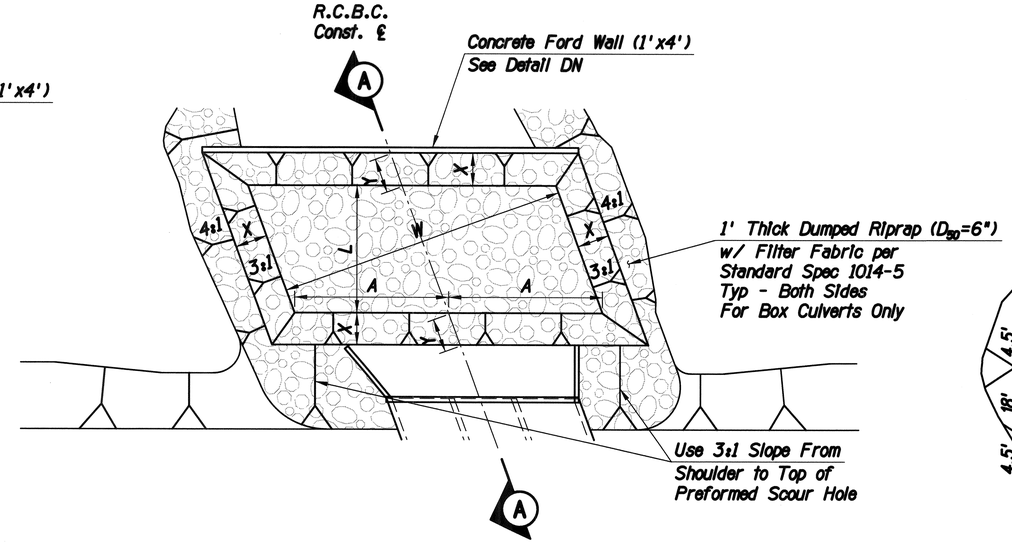

Plan View - ② ⑤ ⑥ ⑦ ⟨7⟩
N.T.S.

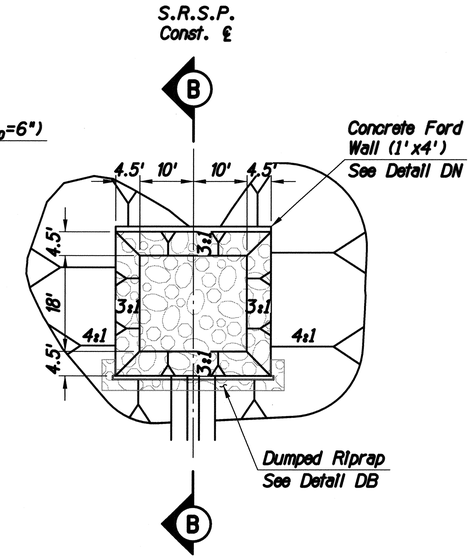

Sta. 232+80 Plan View - ⟨1⟩
N.T.S.

Culvert #	Station	hs	L	W	X	Y	A
		Feet					
①	237+30	2.5	30	46	7.5	N/A	23.0
⟨2⟩	241+82	1.5	18	15	4.5	N/A	7.5
②	253+66	2.5	30	68	7.5	8.7	39.3
⟨4⟩	257+80	1.5	18	15	4.5	N/A	7.5
⟨7⟩	281+75	2.0	24	20	6.0	6.2	10.4
⑤	289+55	2.0	24	24	6.0	6.2	12.4
⑥	296+70	2.5	30	123	7.5	10.6	87.0
⑦	310+50	2.5	30	123	7.5	8.7	71.0

Elev. *
See Culvert Sheet

Riprap Gradation

% Passing	Size
100-90	12"
85-70	9"
50-30	6"
15-5	4"
5-0	2"

Note:

The riprap will be paid for under Bid Item 9130001. The concrete channel lining will be paid for under Bid Item 9130100. The concrete ford walls will be paid for under Bid Item 9080504. The box culvert wingwalls & aprons will be paid for under the box culvert lump sum items.

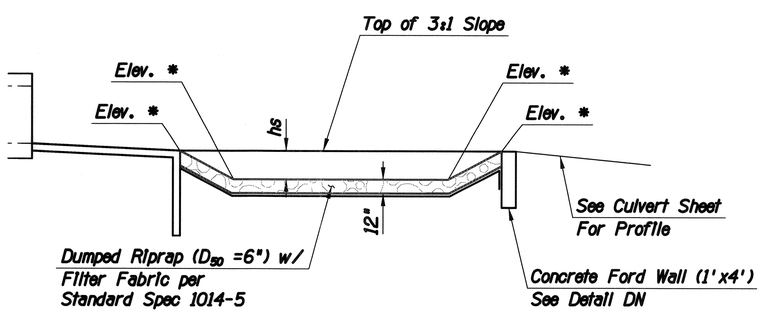

Section (A)
N.T.S.

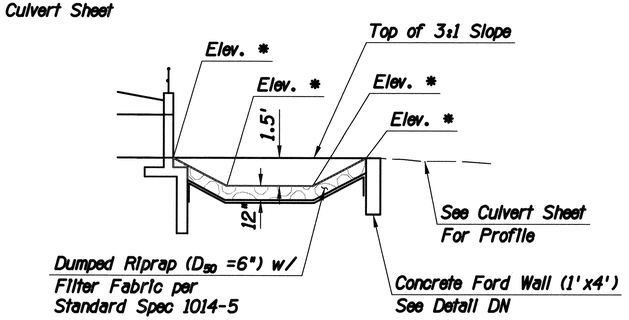

Section (B)
N.T.S.

DETAIL DE

Preformed Scour Hole

SPECIAL DETAILS

Priscilla S. Cornelio, P.E., Director

No.	Revision Description	Engineer	Date

		Date
Designed	JMF	03/2014
Drawn	BJP, JMF	03/2014
Checked	RDB	03/2014
Proj. Engr.	RDB	03/2014

Pima County Department of Transportation

HDR Engineering, Inc.
5210 East Williams Circle, Suite 530
Tucson, AZ 85711-4459
(520) 584-3600

VALENCIA ROAD
WADE ROAD TO MARK ROAD
PROJECT NO. 4RTVMW

Scales	Horiz. 1"=NA / Vert. 1"=NA	Sheet DT43 of DT55	Page 56 of 281

Project ID: 000000000152226
Client Number: 012145
Pentable: 152226_PLOTORDR.TBL
Plotdriver: 152226_V8FULL_B&W_PDF.plt

ProjectWise Directory: Pima_County_Dept_of_Transportation\PCDOT_Valencia_Mtn_Eagle_Mark\13.00_CAD\Construction Documents\Drainage\Wade to Mark\17D-01.dgn
Model: 17D-03
Printed By: jefrey
Date: 7/21/2014 2:15:55 PM
Print Scale: 1:10
TRACS No. SS975 01C

F.H.W.A. REGION	STATE	PROJECT NO.	SHEET NO.	TOTAL SHEETS	AS BUILT
9	ARIZ.	STP-PPM-01(230)A			
		0000 PM PPM SS975 01C			

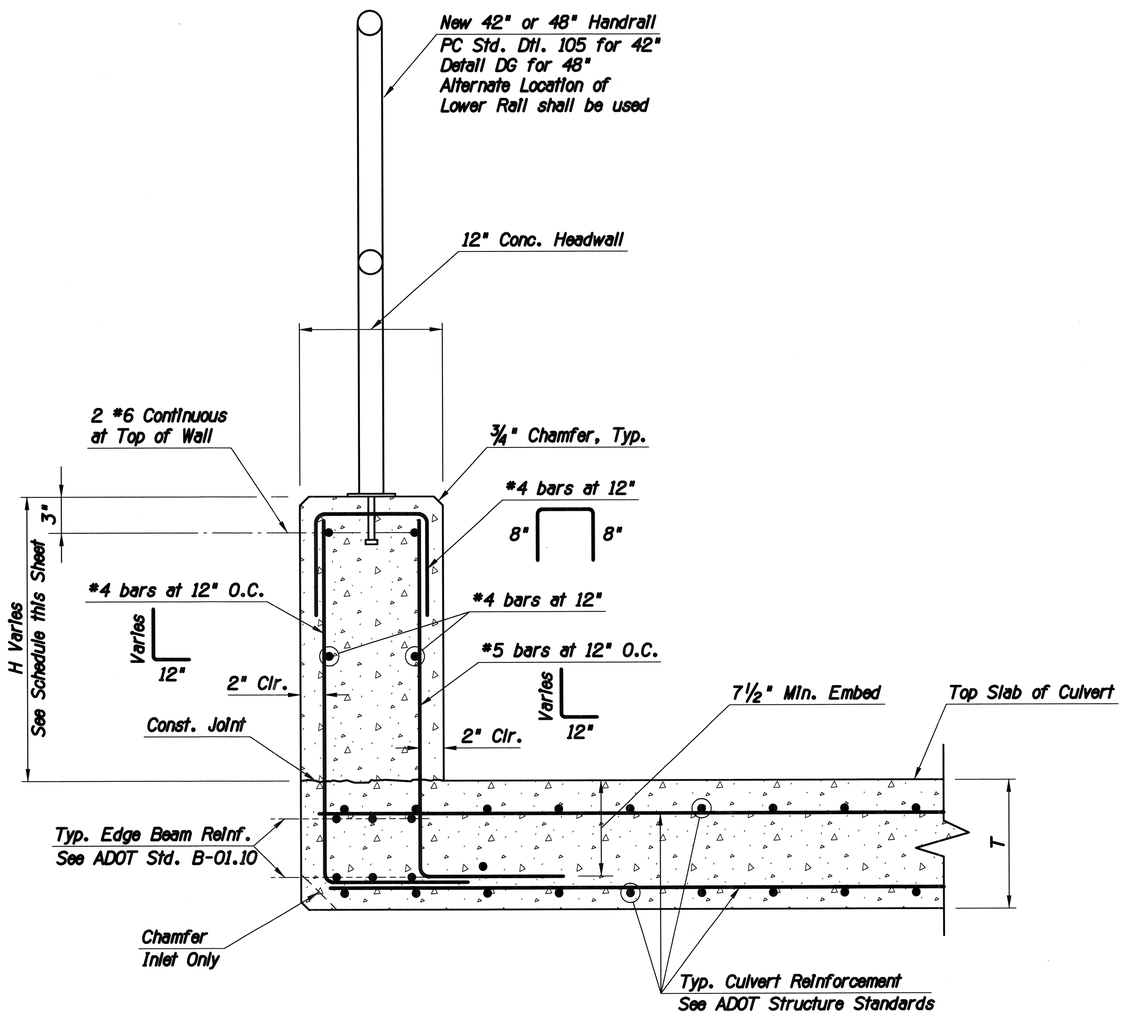

Headwall Section
N.T.S.

Culvert #	Headwall Location	T	H	Handrail Height	Box Culvert Bid Item No.
1	Inlet	10 1/2"	1'-6"	42"	6010161
1	Outlet	10 1/2"	1'-0"	42"	6010161
2	Outlet	10 1/2"	1'-0"	42"	6010162
3	Inlet	10"	1'-6"	48"	6010163
5	Inlet	9 1/2"	1'-0"	42"	6010165
5	Outlet	9 1/2"	2'-0"	42"	6010165
6	Inlet	10 1/2"	1'-6"	48"	6010166
6	Outlet	10 1/2"	2'-0"	42"	6010166
7	Inlet	10 1/2"	1'-0"	42"	6010167
7	Outlet	10 1/2"	2'-0"	42"	6010167

Notes:

1. Concrete shall be Class S (f'_c=3000 psi).
2. Reinforcing steel shall conform to ASTM A615, Grade 60.
3. All reinforcing steel shall have 2" clear cover unless noted otherwise.
4. Provide construction joints in headwalls at a maximum spacing of 30 feet. All joints shall be placed perpendicular to headwall.
5. For Culverts 6 & 7, See Detail DC.
6. All work shown in this detail, except for the handrail, will be paid for under the box culvert bid items.

DETAIL DF

Modified RCBC Headwall

SPECIAL DETAILS

Priscilla S. Cornelio, P.E., Director

No.	Revision Description	Engineer	Date

		Date
Designed	JMF	03/2014
Drawn	BJP, JMF	03/2014
Checked	RDB	03/2014
Proj. Engr.	RDB	03/2014

Pima County Department of Transportation

HDR Engineering, Inc.
5210 East Williams Circle, Suite 530
Tucson, AZ 85711-4459
(520) 584-3600

VALENCIA ROAD
WADE ROAD TO MARK ROAD
PROJECT NO. 4RTVMW

Scales	Horiz. 1"=NA / Vert. 1"=NA	Sheet DT44 of DT55	Page 57 of 281

Print Scale: 1:1

TRACS No. SS975 01C

Project ID: 000000000152226
Client Number: 012145
Pentable: 152226_PLOTORDR.TBL
Plotdriver: 152226_V8FULL_B&W_PDF.plt

ProjectWise Directory: Pima_County_Dept_of_Transportation\PCDOT_Valencia_Mtn_Eagle_Mark\13.00_CAD\Construction Documents\Drainage\Wade to Mark\17D-01.dgn
Model: 17D-04
Printed By: jefrey
Date: 7/21/2014 2:15:57 PM

F.H.W.A. REGION	STATE	PROJECT NO.	SHEET NO.	TOTAL SHEETS	AS BUILT
9	ARIZ.	STP-PPM-0(230)A			
		0000 PM PPM SS975 01C			

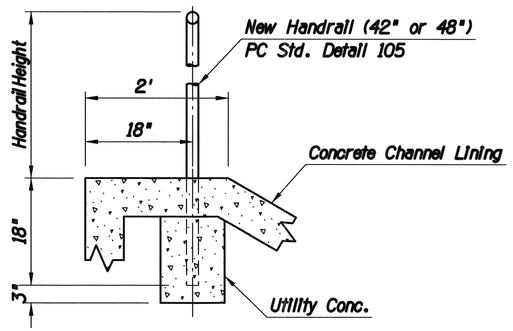

Concrete Channel Lining Handrail Installation

N.T.S.

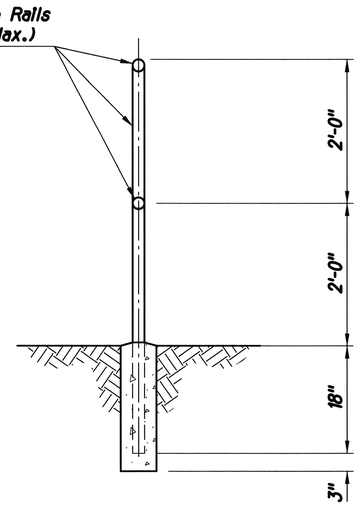

48" Handrail

N.T.S.

Notes:

1. Handrail (Special), including anchor plates, shall be painted in accordance with Standard Specification 933. The color shall be Sherwin-Williams 6164, Svelte Sage or approved equal.
2. This Detail will be paid under Bid Item 9330004 - Handrail (Special).
3. For Information not shown here, see PC Std. Detail 105.

DETAIL DG

48" Handrail

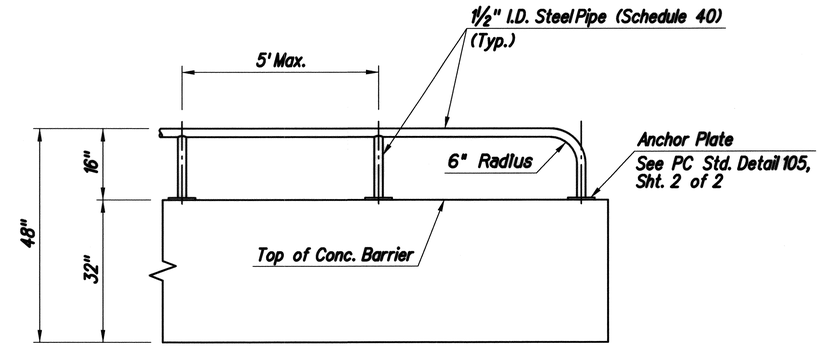

16" Barricade Railing

N.T.S.

Notes:

1. All steel pipe shall conform to PC/COT Std. Specification Section 933.
2. Posts shall be installed vertical.
3. All exposed edges shall be ground smooth.
4. Expansion joints shall be located at 30 foot intervals (max.). See PC Std. Detail 105, Sheet 1 of 2 for expansion joint detail.
5. Barricade Railing, including anchor plates, shall be painted in accordance with Standard Specification 933. The color shall be Sherwin-Williams 6164, Svelte Sage or approved equal.
6. This Barricade Railing will be paid for under Bid Item 9330002.

DETAIL DH

16" Barricade Railing

For Concrete Barrier

SPECIAL DETAILS

Priscilla S. Cornelio, P.E., Director

		Date
Designed	JMF	03/2014
Drawn	BJP, JMF	03/2014
Checked	RDB	03/2014
Proj. Engr.	RDB	03/2014

No.	Revision Description	Engineer	Date

Registered Professional Engineer (Civil) 31803 ARTURO B. LEDESMA Date Signed Arizona, U.S.A. Expires: 12-31-

HDR Engineering, Inc.
5210 East Williams Circle, Suite 530
Tucson, AZ 85711-4459
(520) 394-3600

Pima County Department of Transportation

VALENCIA ROAD
WADE ROAD TO MARK ROAD
PROJECT NO. 4RTVWW

Scales	Horiz. 1"=NA	Sheet DT45 of DT55	Page 58 of 281
	Vert. 1"=NA		

TRACS No. SS975 01C

Pentable: 152226_PLOTDRDR.TBL
Plotdriver: 152226_V8FULL_BW_PDF.plt

Project ID: 0000000000152226
Client Number: 002145

F.H.W.A. REGION	STATE	PROJECT NO.	SHEET NO.	TOTAL SHEETS	AS BUILT
9	ARIZ.	STP-PPM-0(230)A			
		0000 PM PPM SS975 01C			

Riprap Gradation

% Passing	Size
100-90	12"
85-70	9"
50-30	6"
15-5	4"
5-0	2"

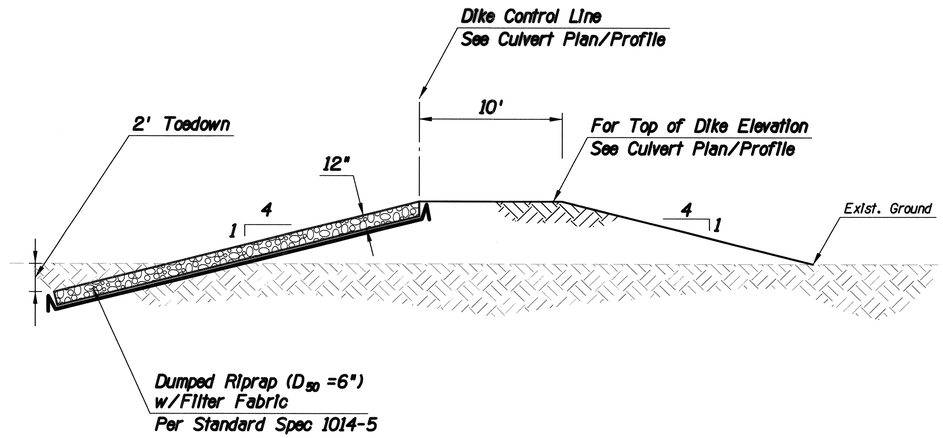

Section
N.T.S.

Notes:

Dumped Riprap & Filter Fabric will be paid for under Item 9130001.

DETAIL DI

Inlet Dike

* Use 4' Toedown for Box No. 6

Outfall Dimensions			
Culvert #	Station	A (Ft)	B (Ft)
Box 1	7+80.00	2.5	2.5
	8+68.25		22.7
	8+75.28	18.9	
Box 2	8+08.00	4.0	4.0
	8+47.39		29.4
	8+69.60	31.8	
Box 3	8+40.00	2.0	2.0
	8+68.00	2.0	2.0
	9+08.96		4.0
	9+13.58	4.0	
Pipe 7	8+25.00	2.0	2.0
	8+61.04		9.4
	8+68.84	6.7	
Box 5	8+15.00	3.0	3.3
	8+84.00		9.0
	8+87.71	13.5	
Box 6	6+19.00	1.0	1.3
	7+00.00	23.0	
	7+29.26		25.2
Box 7	6+87.00	4.0	4.0
	8+17.61		56.1
	8+89.54	57.5	

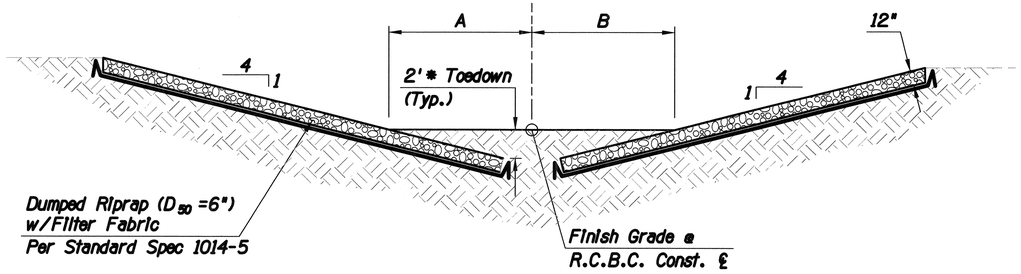

Section - ①②⟨7⟩⑤⑥⑦
N.T.S.

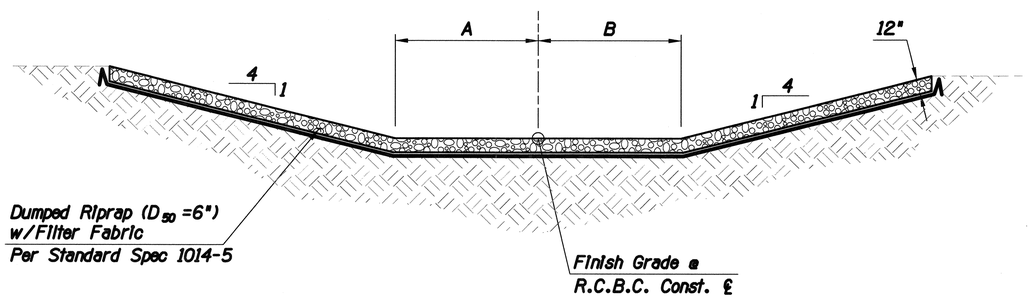

Section - ③
N.T.S.

Notes:

1. Dimensions A & B taper linearly with respect to the R.C.B.C. Const. ℄ between the stations given in the table.
2. Dumped Riprap & Filter Fabric will be paid for under Item 9130001.

Riprap Gradation

% Passing	Size
100-90	12"
85-70	9"
50-30	6"
15-5	4"
5-0	2"

DETAIL DJ

Outfall Channel

SPECIAL DETAILS

Priscilla S. Cornelio, P.E., Director

No.	Revision Description	Date

		Date
Designed	JMF	03/2014
Drawn	BJP, JMF	03/2014
Checked	RDB	03/2014
Proj. Engr.	RDB	03/2014

Engineer

Registered Professional Engineer (Civil) 51803 ARTURO B. LEDESMA ARIZONA U.S.A. Expires: 12-31-2014

HDR Engineering, Inc.
5210 East Williams Circle, Suite 530
Tucson, AZ 85711-4459
(520) 584-3600

Pima County Department of Transportation

VALENCIA ROAD
WADE ROAD TO MARK ROAD
PROJECT NO. 4RTVMW

Scales	Horiz. 1" =NA	Sheet DT46 of DT55	Page 59 of 281
	Vert. 1" =NA		

TRACS No. SS975 01C

Pentable: 152226_PLOTDROR.TBL
Plotdriver: 152226_V8FULL_B&W_PDF.plt

Project ID: 0000000000152226
Client Number: 012145

ProjectWise Directory: Pima_County_Dept_of_Transportation\PCDOT_Valencia_Mtn_Eagle_Mark\13.00_CAD\Construction Documents\Drainage\Wade to Mark\17D-01.dgn
Model: 17D-06

Printed By: jefrey Date: 7/21/2014 2:16:01 PM

Print Scale: 1:1

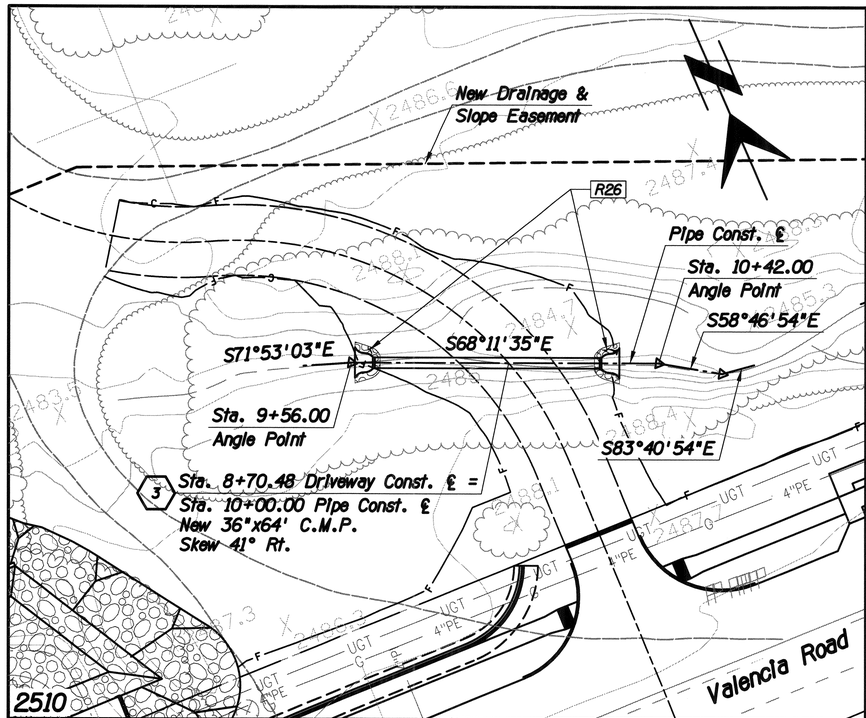

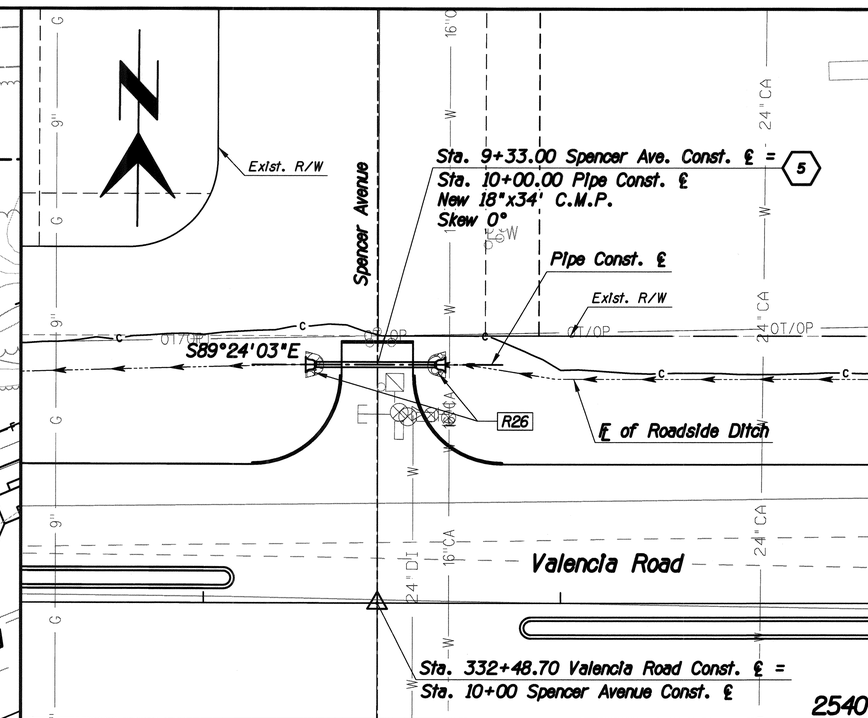

F.H.W.A. REGION	STATE	PROJECT NO.	SHEET NO.	TOTAL SHEETS	AS BUILT
9	ARIZ.	STP-PPM-0(230)A			
		0000 PM PPM SS975 01C			

Item No.	Qty.	Unit	Description
R26	5	C.Y.	Dumped Riprap

Note:

See Detail C for Driveway Details.

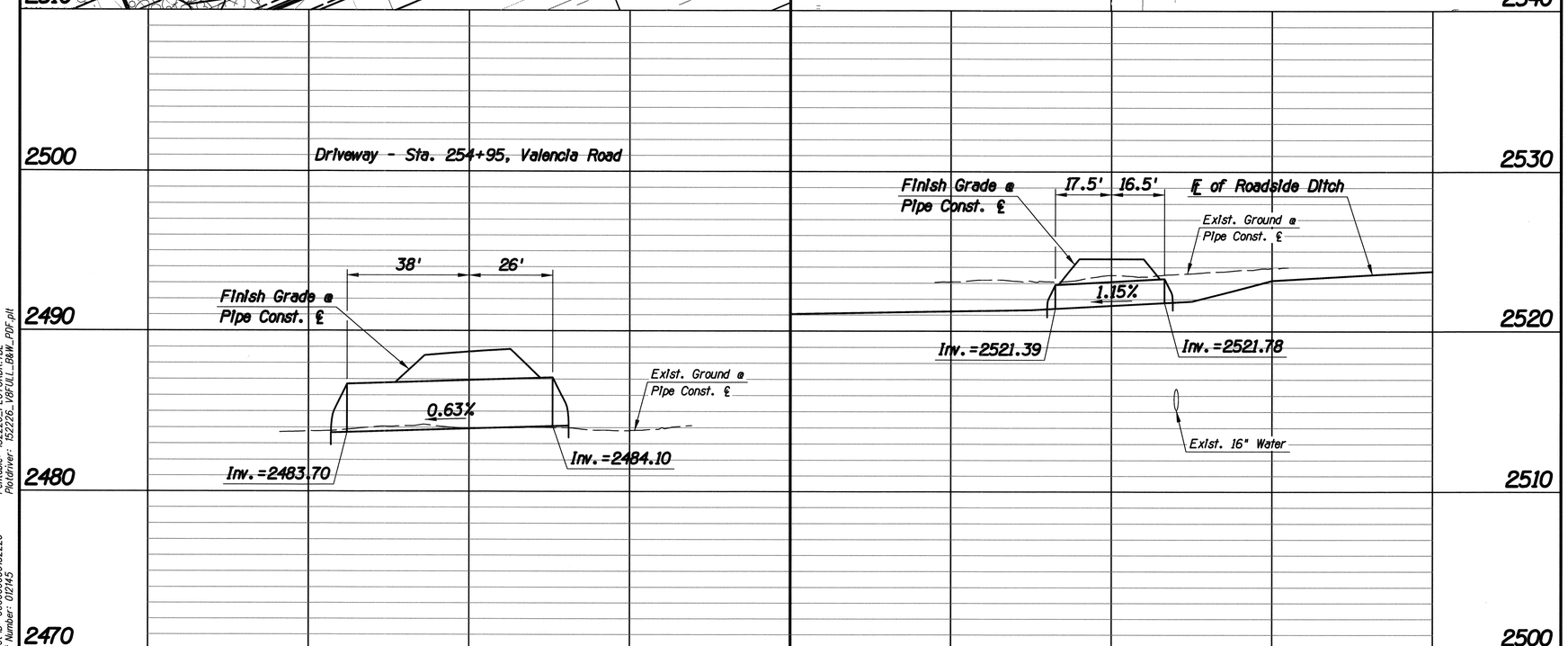

DETAIL DK

C.M.P. Plan & Profiles

SPECIAL DETAILS

Scales	Horiz. 1"=20' Vert. 1"=2'	Sheet DT47 of DT55	Page 60 of 281

TRACS No. SS975 01C

Pima County Department of Transportation

Priscilla S. Cornelio, P.E., Director

No.	Revision Description	Engineer	Date

		Date
Designed	JMF	03/2014
Drawn	JMF	03/2014
Checked	RDB	03/2014
Proj. Engr.	RDB	03/2014

Registered Professional Engineer (Civil) CERTIFICATE NO. 51803 ARTURO B. LEDESMA Date Signed ARIZONA, U.S.A. Expires: 12-31-2014

HDR Engineering, Inc.
5210 East Williams Circle, Suite 530
Tucson, AZ 85711-4459
(520) 584-3600

VALENCIA ROAD
WADE ROAD TO MARK ROAD
PROJECT NO. 4RTVMW

Pentable: 152226_PLOTORDR.TBL
Plotdriver: 152226_V8FULL_B&W_PDF.plt

Project ID: 0000000000152226
Client Number: 012145

ProjectWise Directory: Pima_County_Dept_of_Transportation\PCDOT_Valencia_Mtn_Eagle_Mark\13.00_CAD\Construction Documents\Drainage\Wade to Mark\17D-01.dgn
Model: 17D-07

Printed By: jefrey Date: 7/21/2014 2:16:06 PM

Print Scale: 1:20

F.H.W.A. REGION	STATE	PROJECT NO.	SHEET NO.	TOTAL SHEETS	AS BUILT
9	ARIZ.	STP-PPM-0(230)A			
		0000 PM PPM SS975 01C			

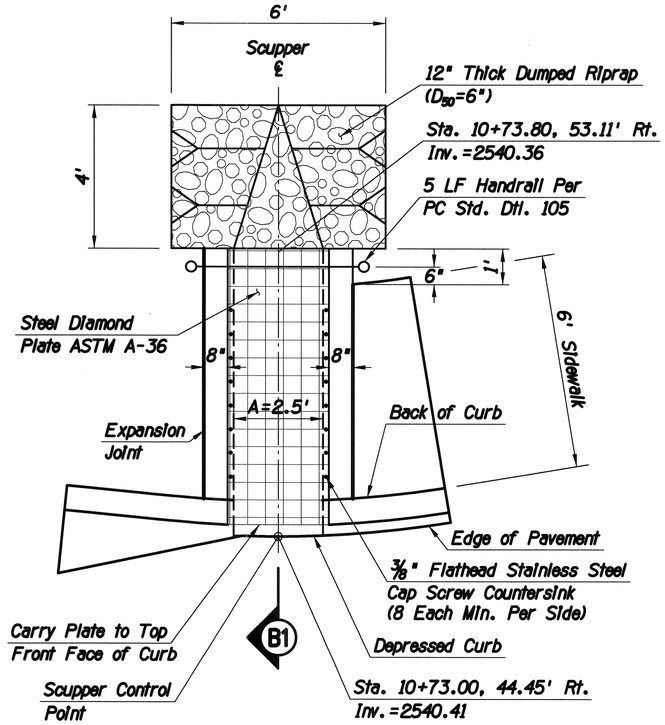

Sidewalk Scupper Plan View
N.T.S.

Note:

1. For all other information, refer to PC/COT Std. Dtl. 205.
2. Dimension A in Section A in PC/COT Std. Dtl. 205 is 2'-6".
3. All Stations shown are from East Casino Entrance.
4. All work shown in this detail, except for riprap & handrail, will be paid for under Bid Item 5030802.

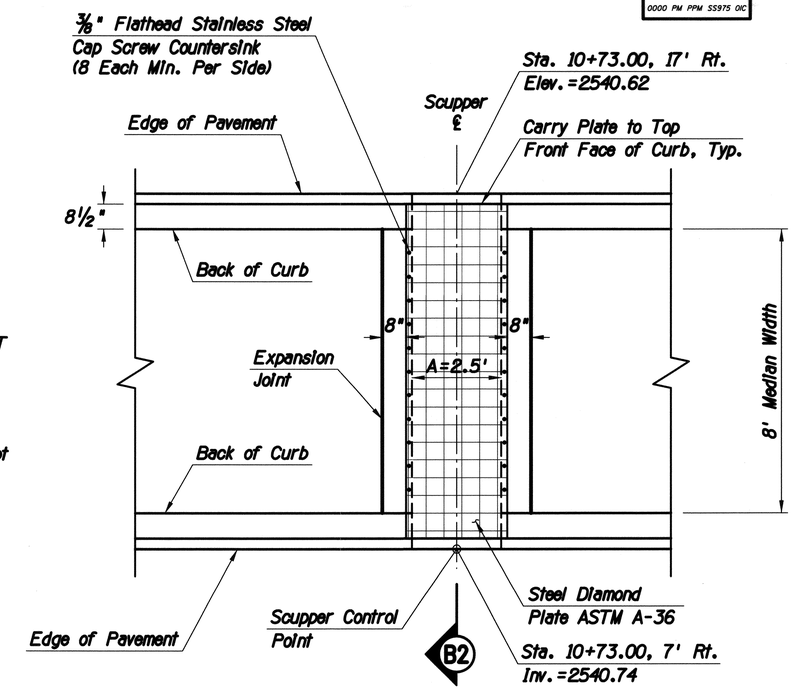

Median Scupper Plan View
N.T.S.

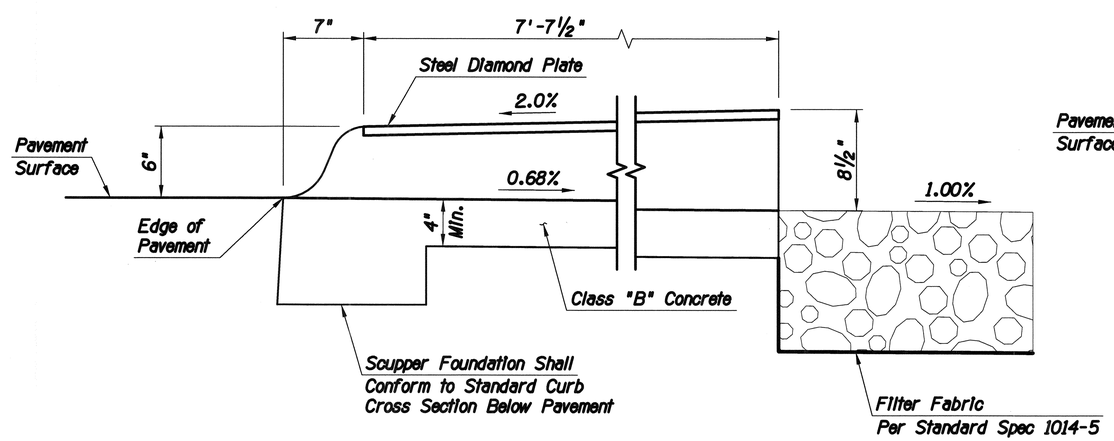

Section B1
N.T.S.

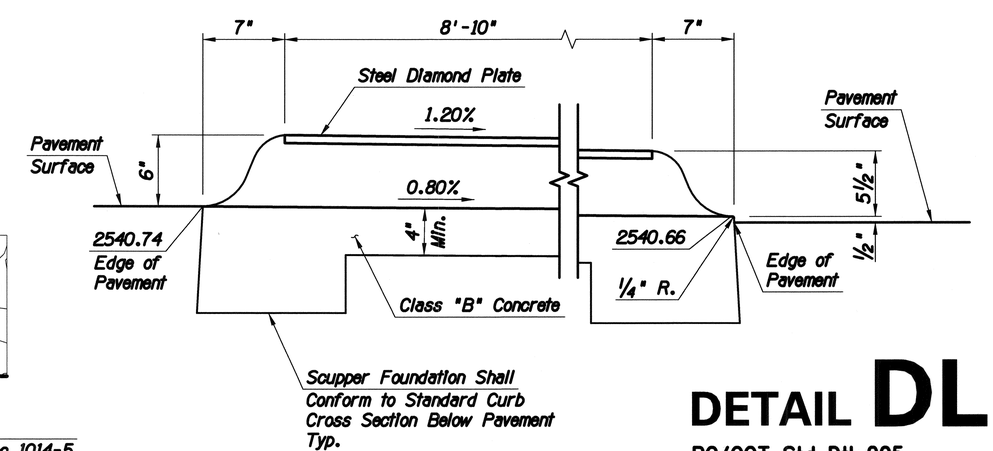

Section B2
N.T.S.

DETAIL DL

PC/COT Std. Dtl. 205
Type 2, Modified
SPECIAL DETAILS

Priscilla S. Cornelio, P.E., Director

No.	Revision Description	Engineer	Date

		Date
Designed	JMF	03/2014
Drawn	JMF	03/2014
Checked	RDB	03/2014
Proj. Engr.	RDB	03/2014

Pima County Department of Transportation

HDR Engineering, Inc.
5210 East Williams Circle, Suite 530
Tucson, AZ 85711-4459
(520) 584-3600

VALENCIA ROAD
WADE ROAD TO MARK ROAD
PROJECT NO. 4RTVMW

Scales	Horiz. 1"=NA / Vert. 1"=NA	Sheet DT48 of DT55	Page 61 of 281

Project ID: 000000000152226
Client Number: 012145
Pentable: 152226_PLOTORDR.TBL
Plotdriver: 152226_V8FULL_B&W_PDF.plt

ProjectWise Directory: Pima_County_Dept_of_Transportation\PCDOT_Valencia_Mtn_Eagle_Mark\13.00_CAD\Construction Documents\Drainage\Wade to Mark\17D-01.dgn
Model: 17D-08
Printed By: jefrey
Date: 7/21/2014 2:16:07 PM
Print Scale: 1:2
TRACS No. SS975 01C

F.H.W.A. REGION	STATE	PROJECT NO.	SHEET NO.	TOTAL SHEETS	AS BUILT
9	ARIZ.	STP-PPM-0(230)A			
		0000 PM PPM SS975 01C			

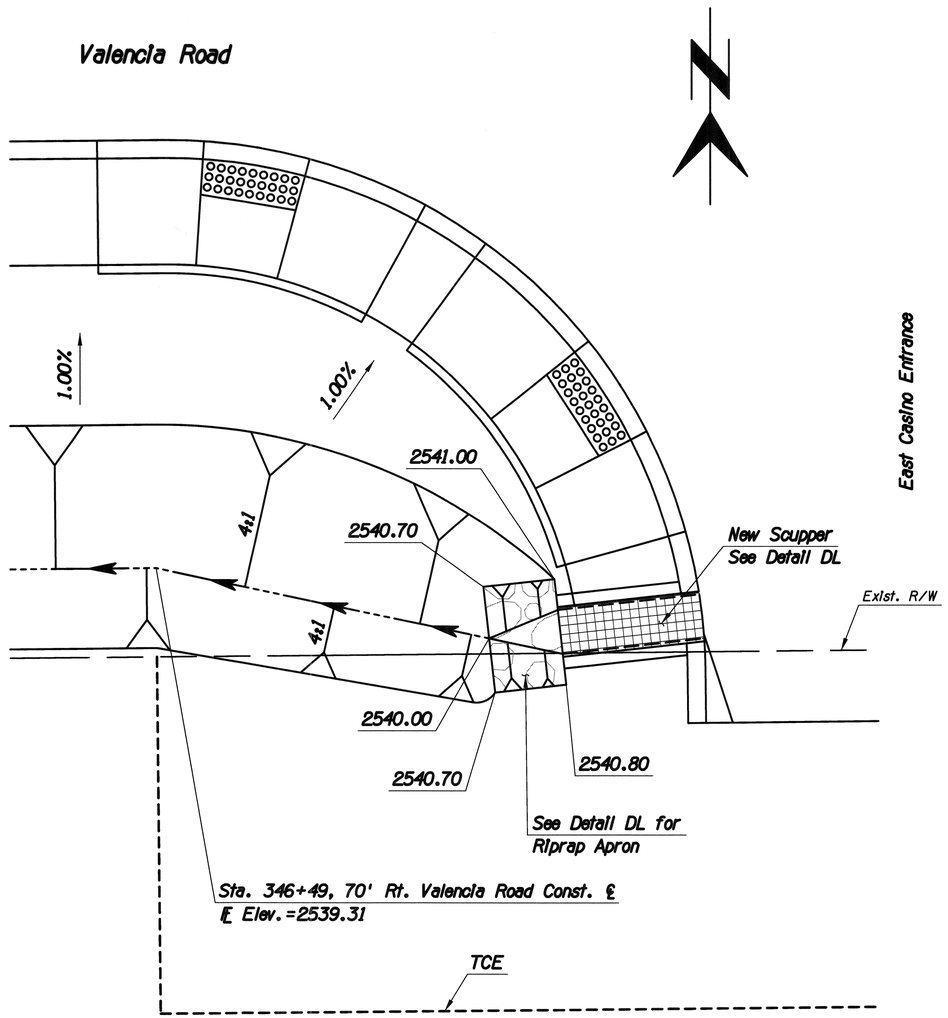

Note:

The scupper will be paid for under Item 5030802. The riprap apron will be paid for under Item 9130001.

DETAIL DM

Sidewalk Scupper Outlet Grading Plan
For East Casino Driveway

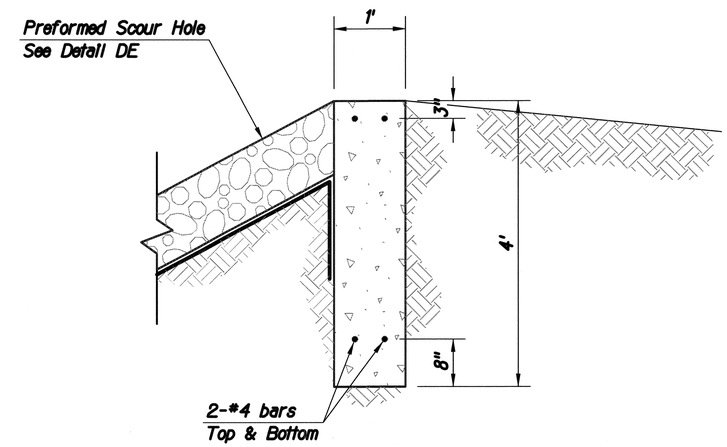

Section
N.T.S.

Note:

1. Concrete shall be Class B.
2. Reinforcing steel shall conform to ASTM A615 Grade 40 or 60.
3. Concrete ford wall (1'x4') will be paid for under Item 9080504.

DETAIL DN

Concrete Ford Wall (1'x4')

SPECIAL DETAILS

Priscilla S. Cornelio, P.E., Director

No.	Revision Description	Engineer	Date

		Date
Designed	JMF	03/2014
Drawn	JMF	03/2014
Checked	RDB	03/2014
Proj. Engr.	RDB	03/2014

Pima County Department of Transportation

HDR

HDR Engineering, Inc.
5210 East Williams Circle, Suite 530
Tucson, AZ 85711-4459
(520) 584-3600

VALENCIA ROAD
WADE ROAD TO MARK ROAD
PROJECT NO. 4RTVMW

Scales	Horiz. 1"=4' Vert. 1"=NA	Sheet DT49 of DT55	Page 62 of 281

Pentable: 152226_PLOTORDR.TBL
Plotdriver: 152226_V8FULL_B&W_PDF.plt
Project ID: 0000000000152226
Client Number: 012145

ProjectWise Directory: Pima_County_Dept_of_Transportation\PCDOT_Valencia_Mtn_Eagle_Mark\13.00_CAD\Construction Documents\Drainage\Wade to Mark\17D-01.dgn
Model: 17D-09
Printed By: jefrey
Date: 7/21/2014 2:16:11 PM
Print Scale: 1:4
TRACS No. SS975 01C

F.H.W.A. REGION	STATE	PROJECT NO.	SHEET NO.	TOTAL SHEETS	AS BUILT
9	ARIZ.	STP-PPM-0(230)A			
		0000 PM PPM SS975 01C			

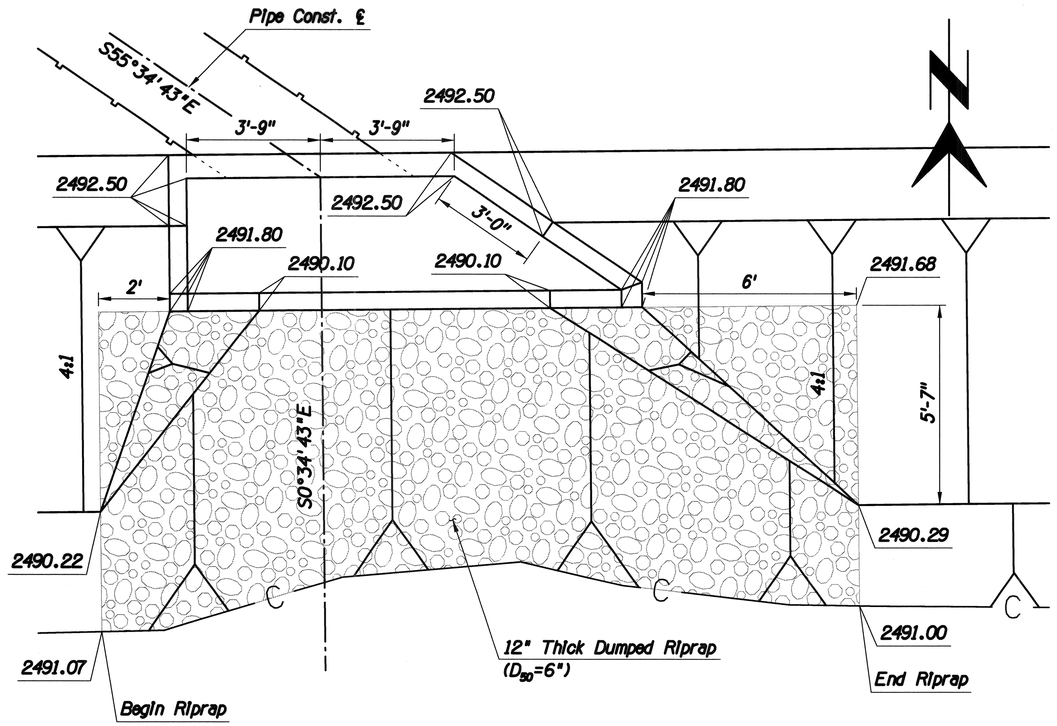

Grading Plan
1"=2'

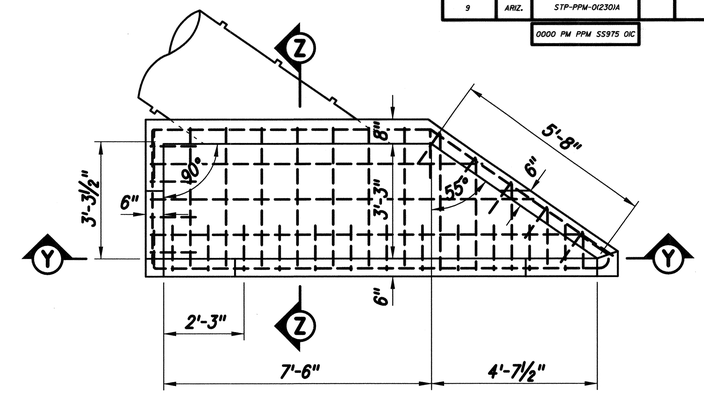

Plan
N.T.S.

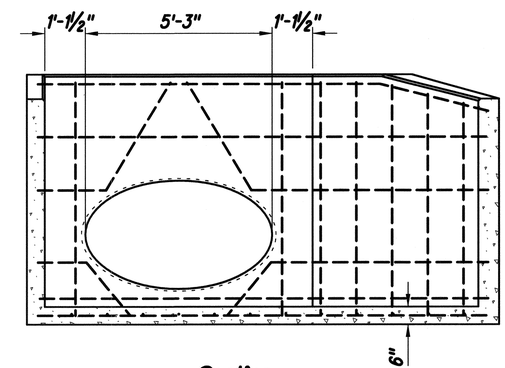

Section Y
N.T.S.

Notes:

1. All concrete shall be Class B.
2. All rebar shall be #4, 1'-0" center to center, with 3" minimum clear to inside of walls and floor.
3. Chamfer all exposed corners ¾".
4. Vertical rebar shall have 12" standard hook into floor.
5. This drop inlet will be paid for under Item No. 5030182.
6. The riprap will be paid for under Item No. 9130001.

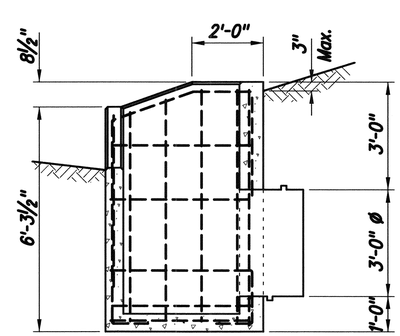

Section Z
N.T.S.

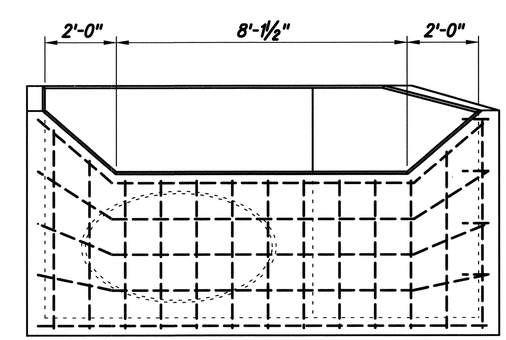

Elevation
N.T.S.

DETAIL DO

Drop Inlet
For Pipe Culvert No. 4

SPECIAL DETAILS

No.	Revision Description	Engineer	Date

Priscilla S. Cornello, P.E., Director

		Date
Designed	JMF	03/2014
Drawn	JMF	03/2014
Checked	RDB	03/2014
Proj. Engr.	RDB	03/2014

Pima County Department of Transportation

HDR Engineering, Inc.
5210 East Williams Circle, Suite 530
Tucson, AZ 85711-4459
(520) 584-3600

VALENCIA ROAD
WADE ROAD TO MARK ROAD
PROJECT NO. 4RTVMW

Scales	Horiz. 1"=NA / Vert. 1"=NA	Sheet DT50 of DT55	Page 63 of 281

Project ID: 000000000152226
Client Number: 012145
Pentable: 152226_PLOTORDR.TBL
Plotdriver: 152226_V8FULL_B&W_PDF.plt

ProjectWise Directory: Pima_County_Dept_of_Transportation\PCDOT_Valencia_Mtn_Eagle_Mark\13.00_CAD\Construction Documents\Drainage\Wade to Mark\17D-01.dgn
Model: 17D-10
Printed By: jefrey
Date: 7/21/2014 2:16:13 PM
Print Scale: 1:2
TRACS No. SS975 01C

F.H.W.A. REGION	STATE	PROJECT NO.	SHEET NO.	TOTAL SHEETS	AS BUILT
9	ARIZ.	STP-PPM-0(230)A			
		0000 PM PPM SS975 01C			

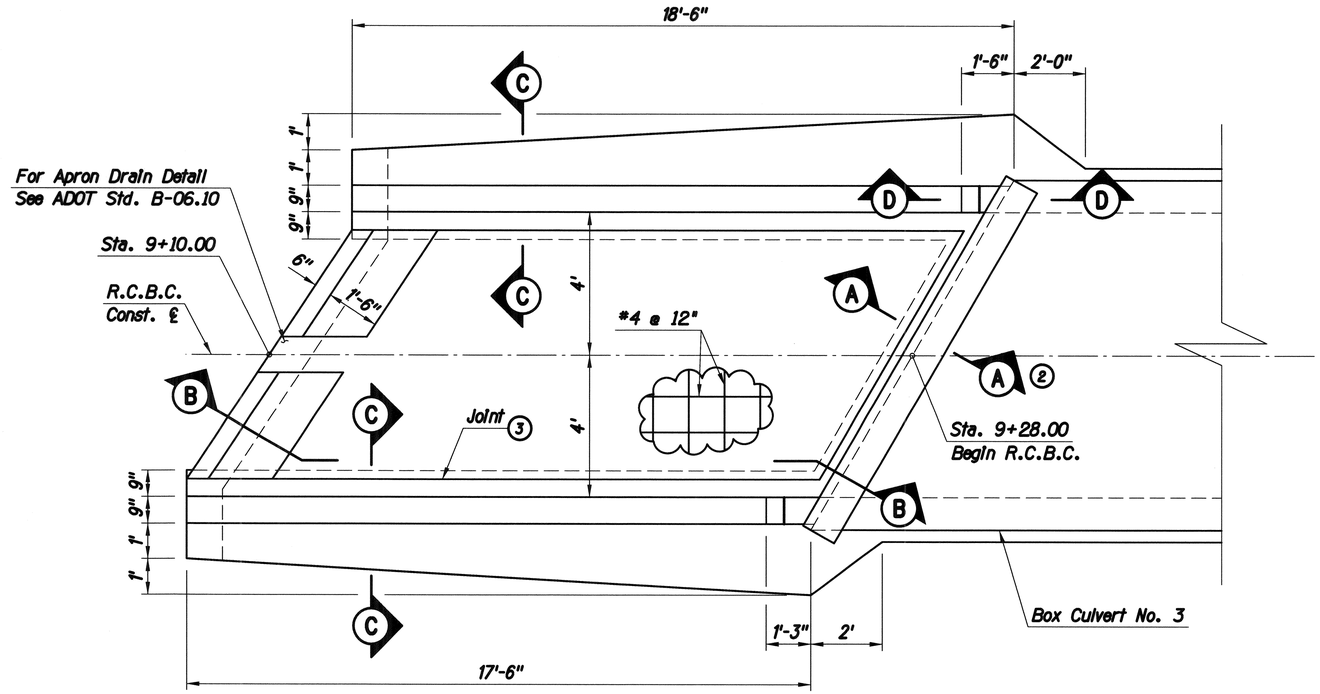

Plan
½" = 1'

Notes:

1. For general notes and miscellaneous details, See ADOT Std. B-01.10.
2. For Section A-A, See ADOT Std. B-04.50.
3. Optional Construction Joint. Apron may be poured with wingwall footings and bottom slab of R.C.B.C.
4. All work shown in this detail will be paid for under Bid Item 6010163.

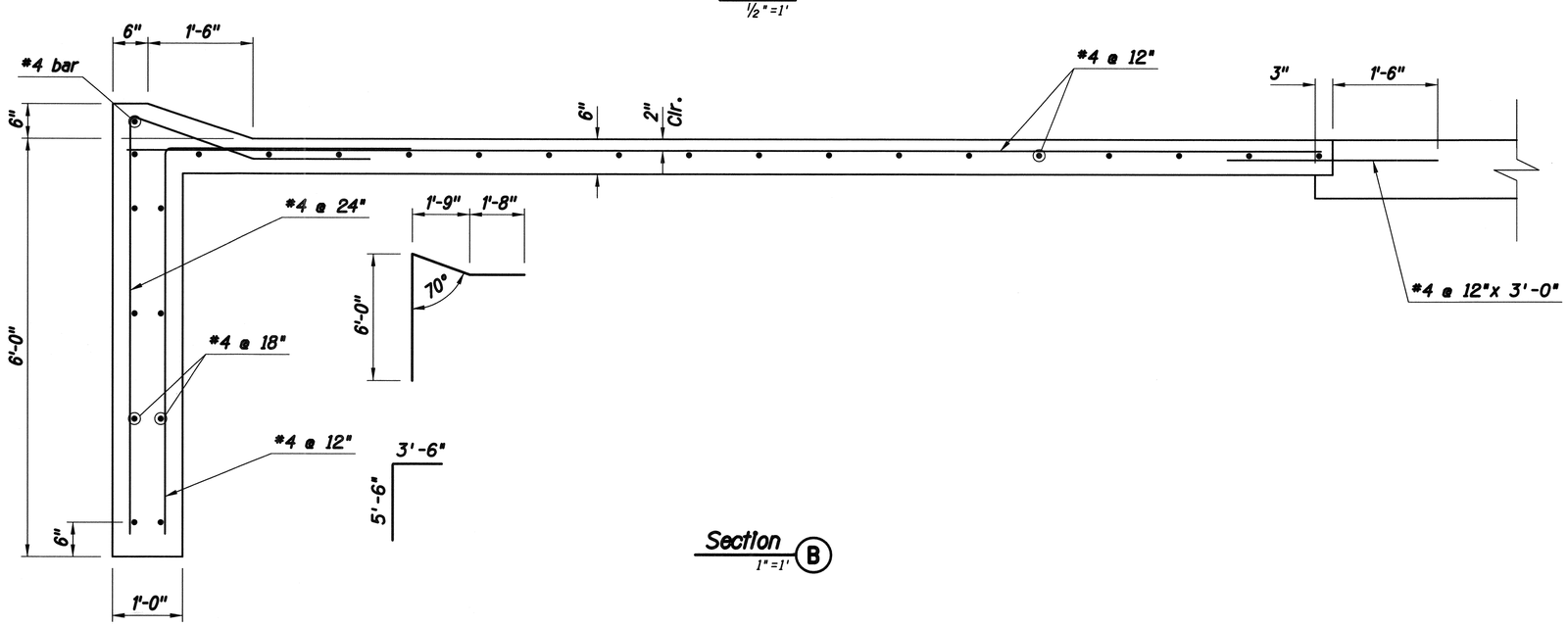

Section B
1" = 1'

DETAIL DP

Sheet 1 of 2

Outlet Detail - Box 3

SPECIAL DETAILS

Scales	Horiz. 1" = NA	Sheet DT51 of DT55	Page 64 of 281
	Vert. 1" = NA		

TRACS No. SS975 01C

Pima County Department of Transportation

Priscilla S. Cornelio, P.E., Director

		Date
Designed	JMF	03/2014
Drawn	BJP, JMF	03/2014
Checked	RDB	03/2014
Proj. Engr.	RDB	03/2014

No.	Revision Description	Engineer	Date

Registered Professional Engineer (Civil) 31803 ARTURO B. LEDESMA Date Signed 12-31-14 ARIZONA, U.S.A. Expires: 12-31-14

HDR Engineering, Inc.
5210 East Williams Circle, Suite 530
Tucson, AZ 85711-4459
(520) 584-3600

VALENCIA ROAD
WADE ROAD TO MARK ROAD
PROJECT NO. 4RTVMW

Pentable: 152226_PLOTDROR.TBL
Plotdriver: 152226_V8FULL_B&W_PDF.plt

Project ID: 0000000000152226
Client Number: 012145

ProjectWise Directory: Pima_County_Dept_of_Transportation\PCDOT_Valencia_Mtn_Eagle_Mark\13.00_CAD\Construction Documents\Drainage\Wade to Mark\17D-01.dgn
Model: 17D-11

Printed By: jefrey Date: 7/21/2014 2:16:15 PM

Print Scale: 1:2

F.H.W.A. REGION	STATE	PROJECT NO.	SHEET NO.	TOTAL SHEETS	AS BUILT
9	ARIZ.	STP-PPM-0(230)A			
		0000 PM PPM SS975 01C			

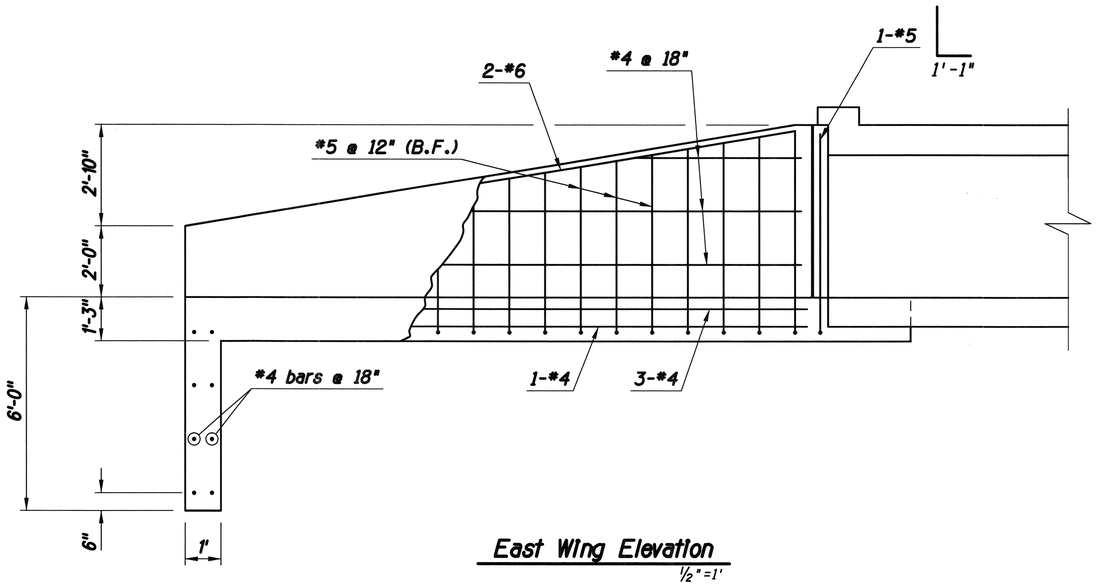

East Wing Elevation
1/2"=1'

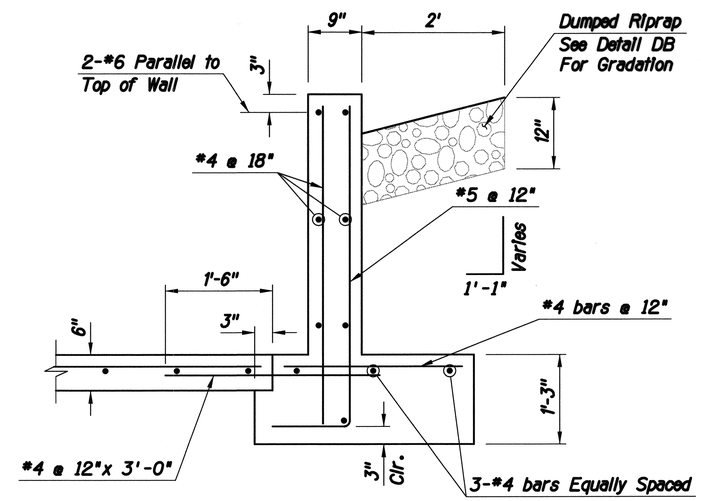

Section C
1"=1'

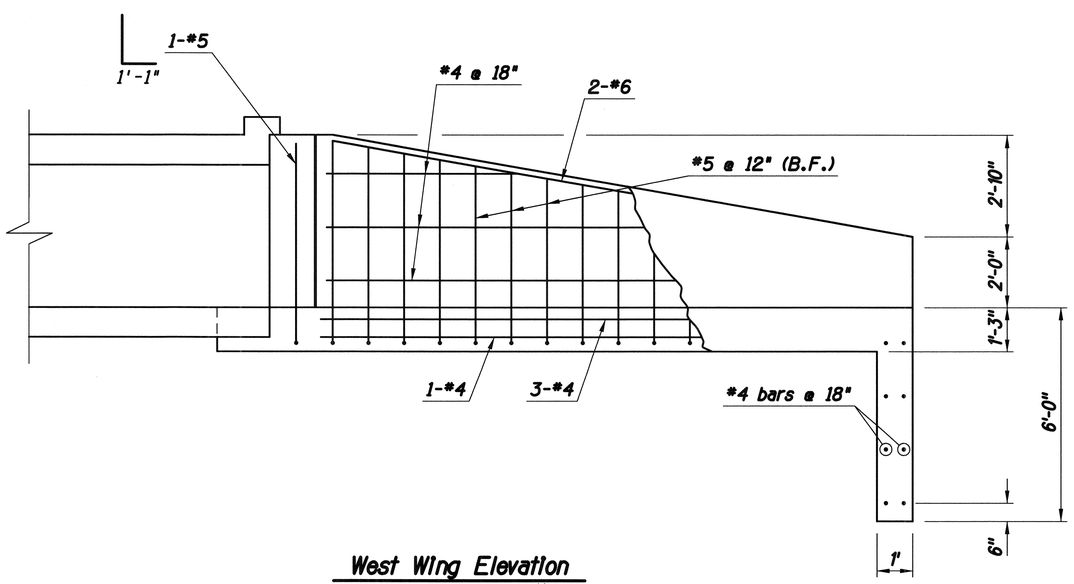

West Wing Elevation
1/2"=1'

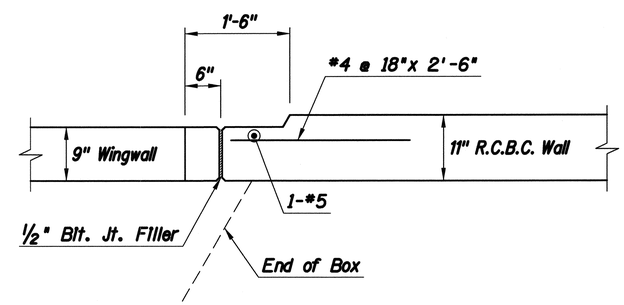

Section D
1"=1'

DETAIL DP

Sheet 2 of 2

Outlet Detail - Box 3

SPECIAL DETAILS

Scales	Horiz. 1"=NA	Sheet DT52 of DT55	Page 65 of 281
	Vert. 1"=NA		

Priscilla S. Cornelio, P.E., Director

No.	Revision Description	Engineer	Date

		Date
Designed	JMF	03/2014
Drawn	BJP, JMF	03/2014
Checked	RDB	03/2014
Proj. Engr.	RDB	03/2014

Pima County Department of Transportation

HDR

HDR Engineering, Inc.
5210 East Williams Circle, Suite 530
Tucson, AZ 85711-4459
(520) 584-3600

VALENCIA ROAD
WADE ROAD TO MARK ROAD
PROJECT NO. 4RTVMW

Project ID: 0000000000152226
Client Number: 012145
Pentable: 152226_PLOTORDR.TBL
Plotdriver: 152226_V8FULL_B&W_PDF.plt

F.H.W.A. REGION	STATE	PROJECT NO.	SHEET NO.	TOTAL SHEETS	AS BUILT
9	ARIZ.	STP-PPM-012301A			
		0000 PM PPM SS975 01C			

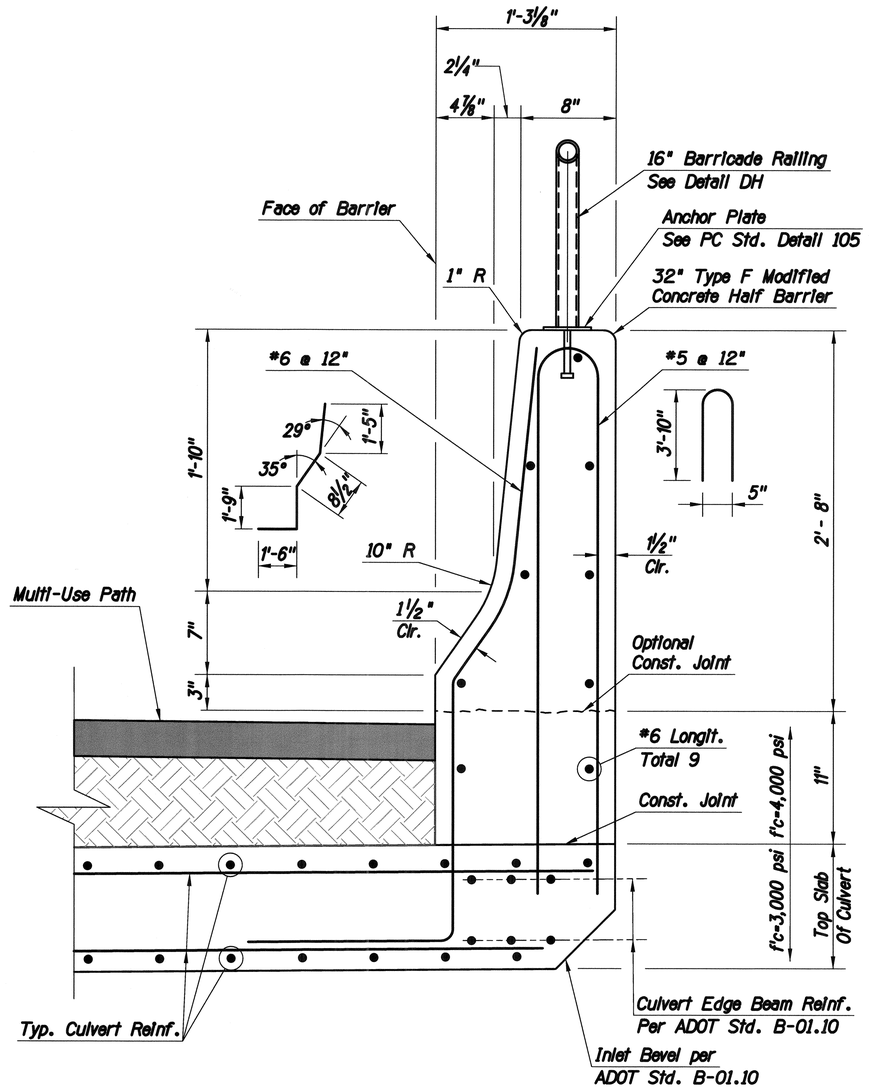

Barrier Headwall Section

2" = 1'

Barrier Dimension Schedule

Culvert #	A	B	C
2	2'-7"	4'-11"	1'-9"
3	2'-8"	5'-0"	1'-10"

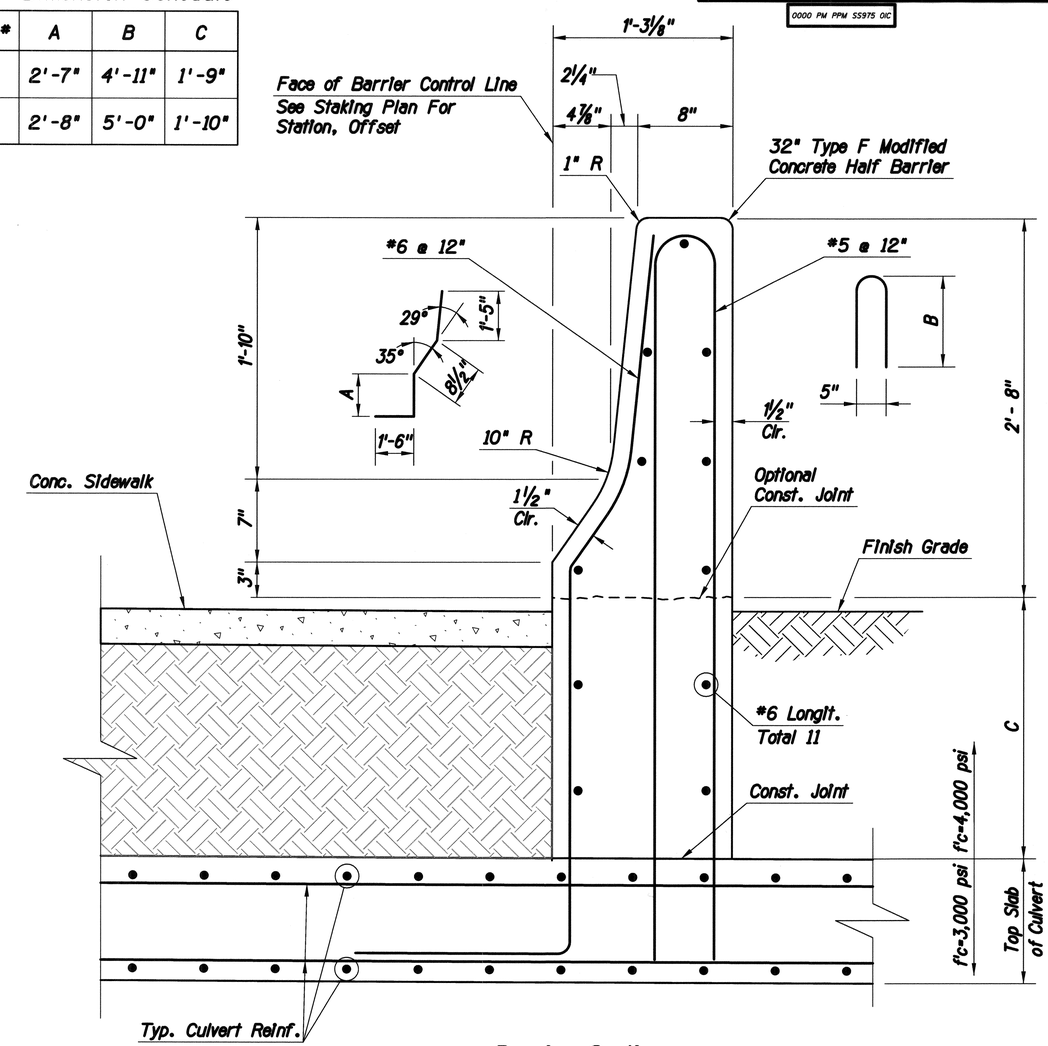

Barrier Section

2" = 1'

DETAIL DQ

Inlet Headwall for Box Culvert No. 2

Notes:

1. All work shown in this detail, except for Barricade Railing, will be paid for under Bid Item 6010162 (Box No. 2).
2. See Detail DR for all other notes.

Notes:

1. Concrete for barrier shall be Class S (f'c=4,000 psi).
2. Reinforcing steel shall conform to ASTM A 615, Grade 60.
3. All reinforcing steel shall have 2" clear cover unless noted otherwise.
4. Provide ½" vertical expansion joints between barrier constructed on culvert and barrier constructed on footings. See Expansion Joint Detail DT.
5. The concrete barrier on Box 2 will be paid for under Bid Item 6010162 (Box No. 2). The concrete barrier on Box 3 will be paid for under Bid Item 6010163 (Box No. 3).
6. For dimensions denoted as A, B & C, see schedule, this sheet.

DETAIL DR

Concrete Barrier On

Box Culvert Nos. 2 & 3

SPECIAL DETAILS

Priscilla S. Cornelio, P.E., Director

No.	Revision Description	Engineer	Date

		Date
Designed	TWB	03/2014
Drawn	ABL, JMF	03/2014
Checked	RDB	03/2014
Proj. Engr.	RDB	03/2014

Registered Professional Engineer (Civil) CERTIFICATE NO. 51803 ARTURO B. LEDESMA Date Signed 03/2014 ARIZONA, U.S.A. Expires: 12-31-2016

HDR

HDR Engineering, Inc.
5210 East Williams Circle, Suite 530
Tucson, AZ 85711-4459
(520) 584-3600

Pima County Department of Transportation

VALENCIA ROAD
WADE ROAD TO MARK ROAD
PROJECT NO. 4RTVMW

Scales	Horiz. 1"=NA / Vert. 1"=NA	Sheet DT53 of DT55	Page 66 of 281

Project ID: 000000000152226
Client Number: 012145
Pentable: 152226_PLOTORDR.TBL
Plotdriver: 152226_V8FULL_B&W_PDF.plt

ProjectWise Directory: Pima_County_Dept_of_Transportation\PCDOT_Valencia_Mtn_Eagle_Mark\13.00_CAD\Construction Documents\Drainage\Wade to Mark\17D-01.dgn
Model: 17D-13

Printed By: jefrey Date: 7/21/2014 2:16:18 PM Print Scale: 1:1

TRACS No. SS975 01C

F.H.W.A. REGION	STATE	PROJECT NO.	SHEET NO.	TOTAL SHEETS	AS BUILT
9	ARIZ.	STP-PPM-0(230)A			
		0000 PM PPM SS975 01C			

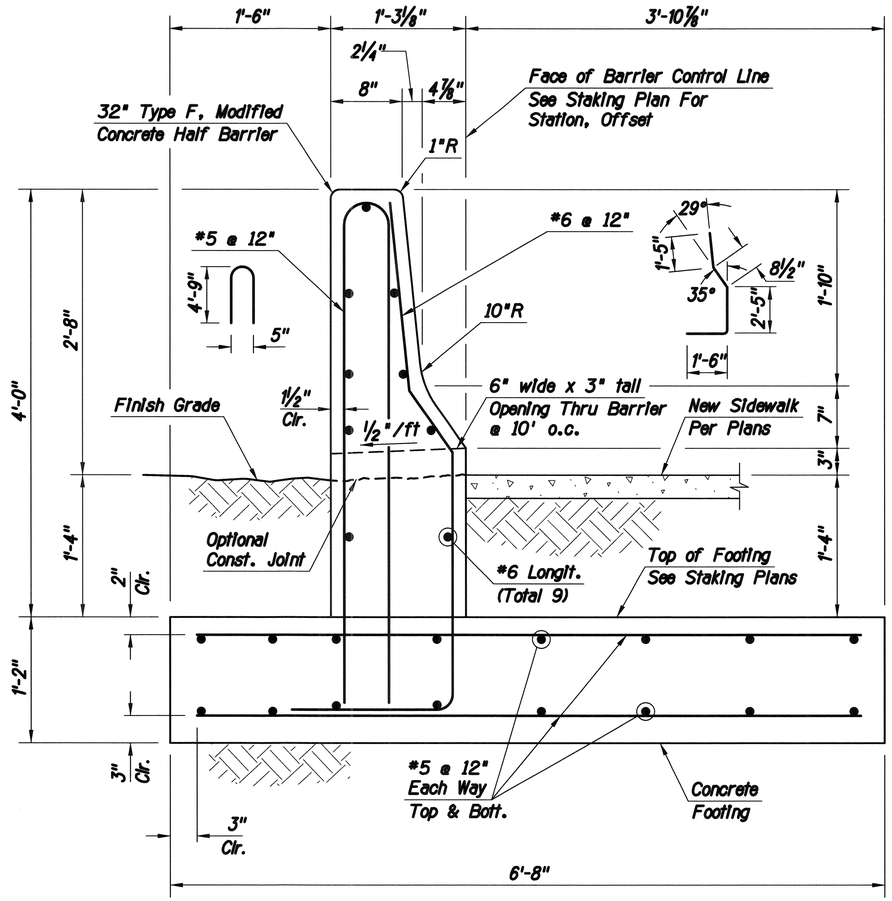

Section - Concrete Barrier on Footing

N.T.S.

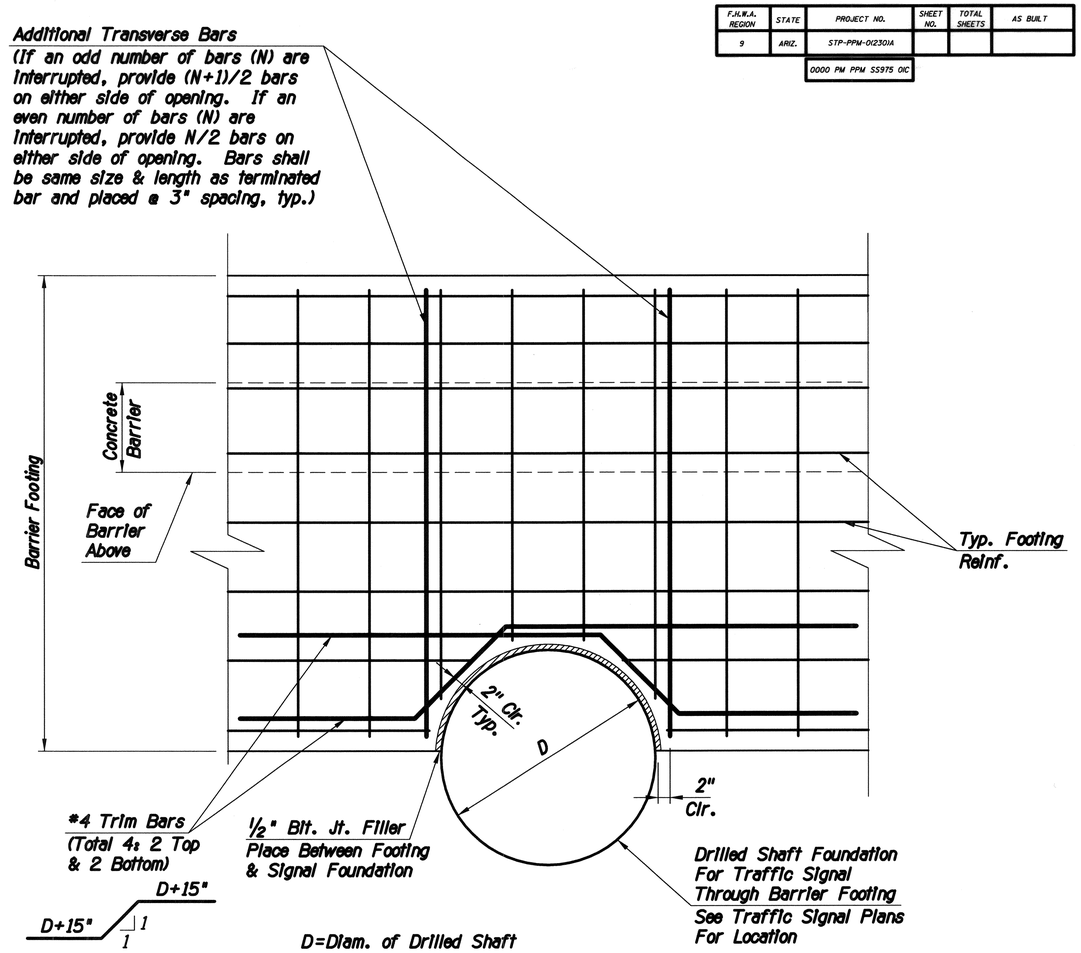

Plan - Drilled Shaft Foundation Through Barrier Footing

N.T.S.

Notes:

1. All concrete shall be Class 'S', f'_c=4,000 psi.
2. Reinforcing steel shall conform to ASTM A615, Grade 60.
3. Reinforcing steel shall have 2" clear cover unless noted otherwise.
4. All bend dimensions for reinforcing steel are out-to-out of bars.
5. Provide ½" vertical expansion joints between barrier constructed on culvert and barrier constructed on footing. See Expansion Joint Detail DT.
6. Provide End Treatment per detail on this sheet at beginning & end of barriers, typ.
7. This Concrete Barrier will be paid for under Bid Item 9100006.

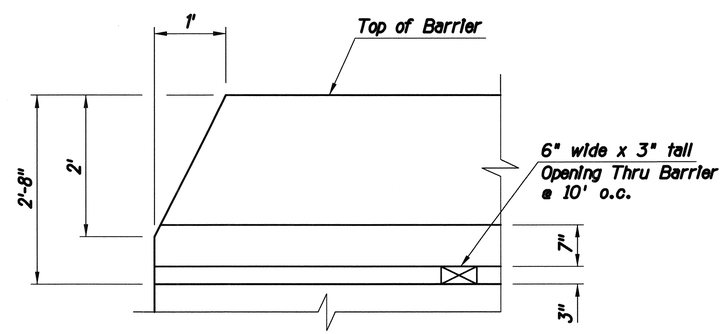

Elevation - End Treatment

N.T.S.

DETAIL DS

Concrete Barrier on Footing

SPECIAL DETAILS

Scales	Horiz. 1"=NA / Vert. 1"=NA	Sheet DT54 of DT55	Page 67 of 281

Pima County Department of Transportation

Priscilla S. Cornelio, P.E., Director

No.	Revision Description	Engineer	Date

		Date
Designed	TWB	03/2014
Drawn	BJP, JMF	03/2014
Checked	RDB	03/2014
Proj. Engr.	RDB	03/2014

HDR Engineering, Inc.
5210 East Williams Circle, Suite 530
Tucson, AZ 85711-4459
(520) 584-3600

VALENCIA ROAD
WADE ROAD TO MARK ROAD
PROJECT NO. 4RTVMW

Project ID: 0000000000152226
Client Number: 012145
Pentable: 152226_PLOTORDR.TBL
Plotdriver: 152226_V8FULL_B&W_PDF.plt

ProjectWise Directory: Pima_County_Dept_of_Transportation\PCDOT_Valencia_Mtn_Eagle_Mark\13.00_CAD\Construction Documents\Drainage\Wade to Mark\17D-01.dgn
Model: 17D-14
Printed By: jefrey
Date: 7/21/2014 2:16:20 PM
Print Scale: 1:1
TRACS No. SS975 01C

F.H.W.A. REGION	STATE	PROJECT NO.	SHEET NO.	TOTAL SHEETS	AS BUILT
9	ARIZ.	STP-PPM-0(230)A			
		0000 PM PPM SS975 01C			

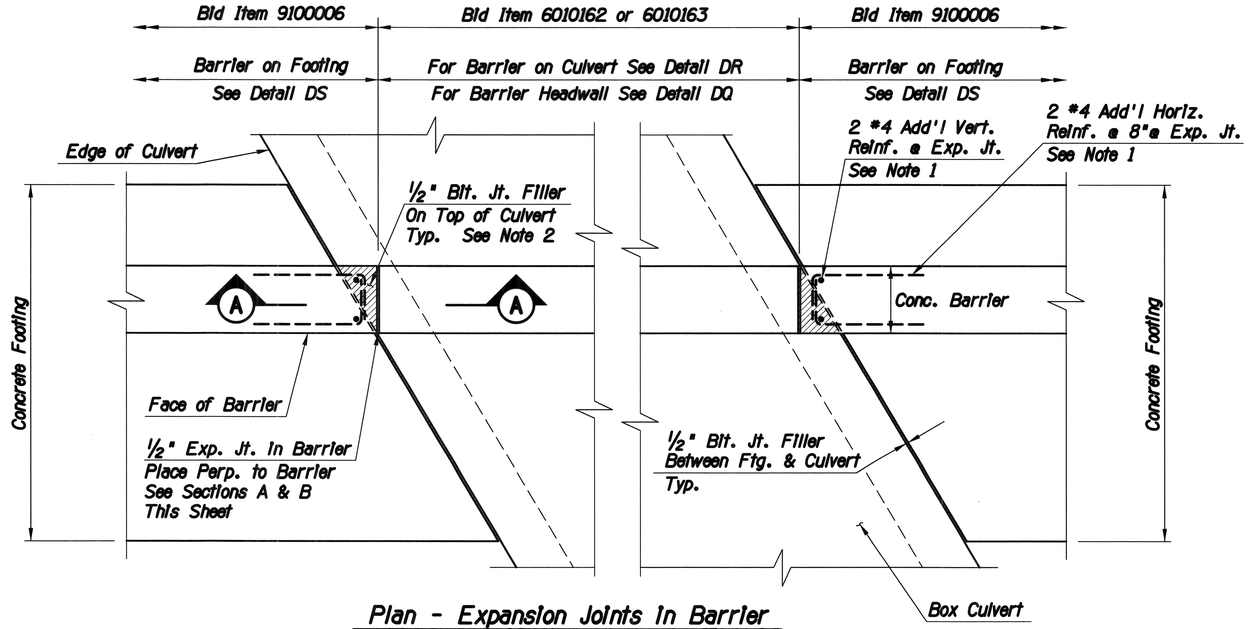

Plan - Expansion Joints In Barrier
(Barrier on Culvert Shown
Barrier Headwall, Sim.)
N.T.S.

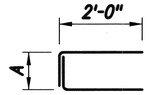

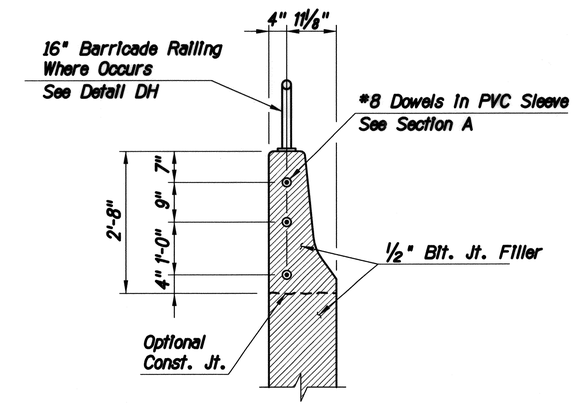

Section B
N.T.S.

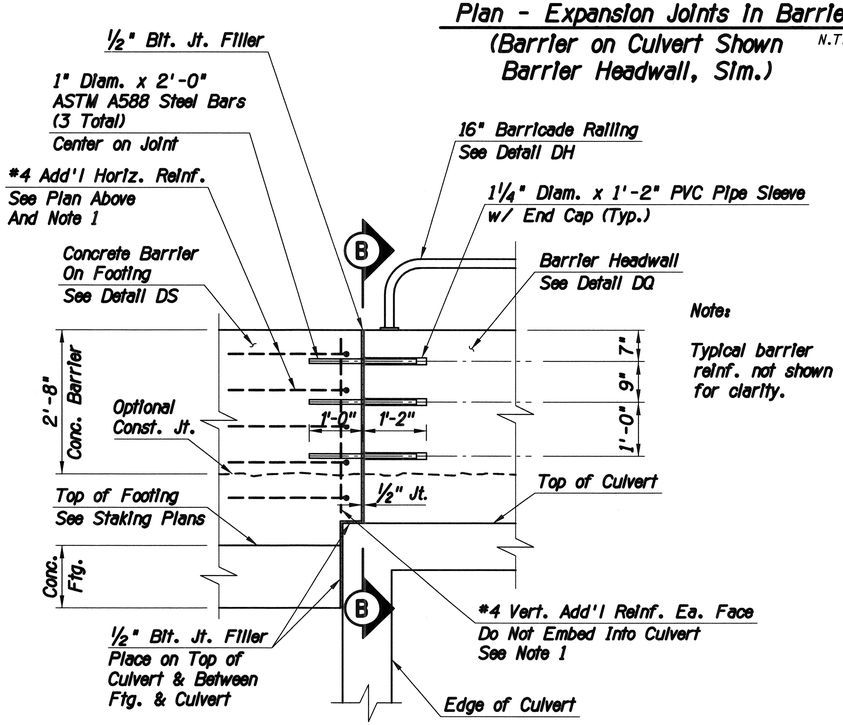

@ Barrier Headwall

Note:

Typical barrier reinf. not shown for clarity.

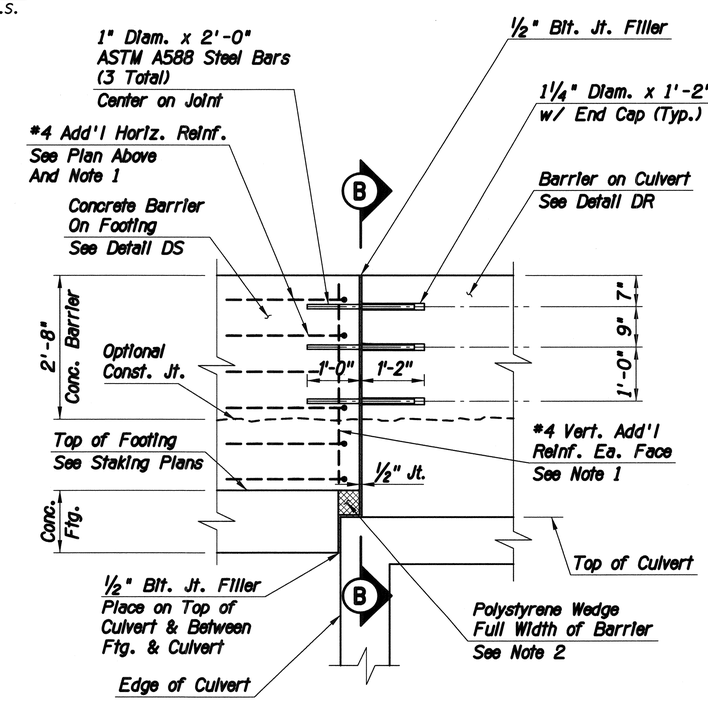

@ Barrier on Culvert

SECTION - EXPANSION JT IN BARRIER @ EDGE OF CULVERT (A)
N.T.S.

Notes:

1. Provide additional reinforcing in barrier on the side of the expansion joints where the barriers cantilever over the culvert. Dimension 'A' on the horizontal L-shape bars varies from 3 1/2" at top of barrier to 10" at bottom of barrier. The #4 vertical bars shall be placed parallel to the front and back faces of the barrier and shall not be embedded into the top slab of the culvert.
2. Use polystyrene block instead of Blt. Jt. filler between bottom of barrier and top of culvert when top of barrier footing is above top of culvert.
3. All concrete barrier on footing will be paid for under item 9100006. This item will also include the cost of dowels, sleeves, blt. jt. filler, additional reinforcing and polystyrene wedge. 16" barricade railing will be paid for under item 9330002.

DETAIL DT

Expansion Joint In Concrete Barrier

SPECIAL DETAILS

No.	Revision Description	Engineer	Date

		Date
Designed	TWD	03/2014
Drawn	JMF	03/2014
Checked	RDB	03/2014
Proj. Engr.	RDB	03/2014

Priscilla S. Cornelio, P.E., Director

Pima County Department of Transportation

HDR Engineering, Inc.
5210 East Williams Circle, Suite 530
Tucson, AZ 85711-4459
(520) 584-3600

VALENCIA ROAD
WADE ROAD TO MARK ROAD
PROJECT NO. 4RTVMW

Scales	Horiz. 1"=NA	Sheet DT55 of DT55	Page 68 of 281
	Vert. 1"=NA		

TRACS No. SS975 01C

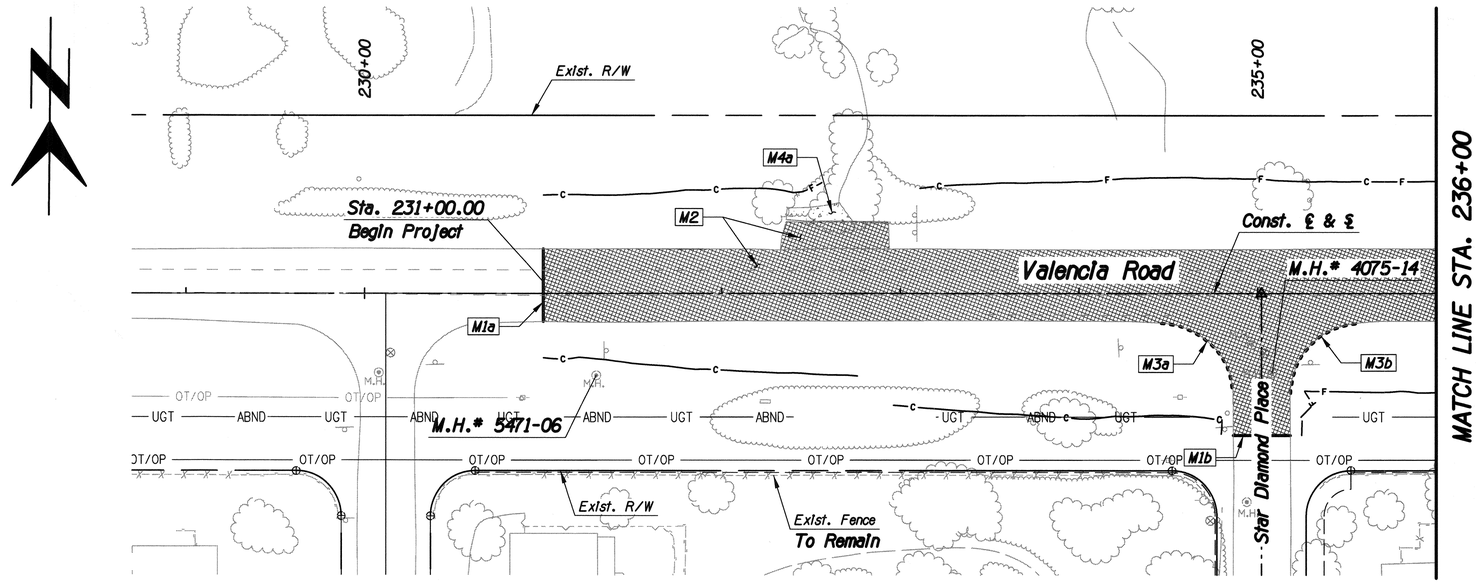

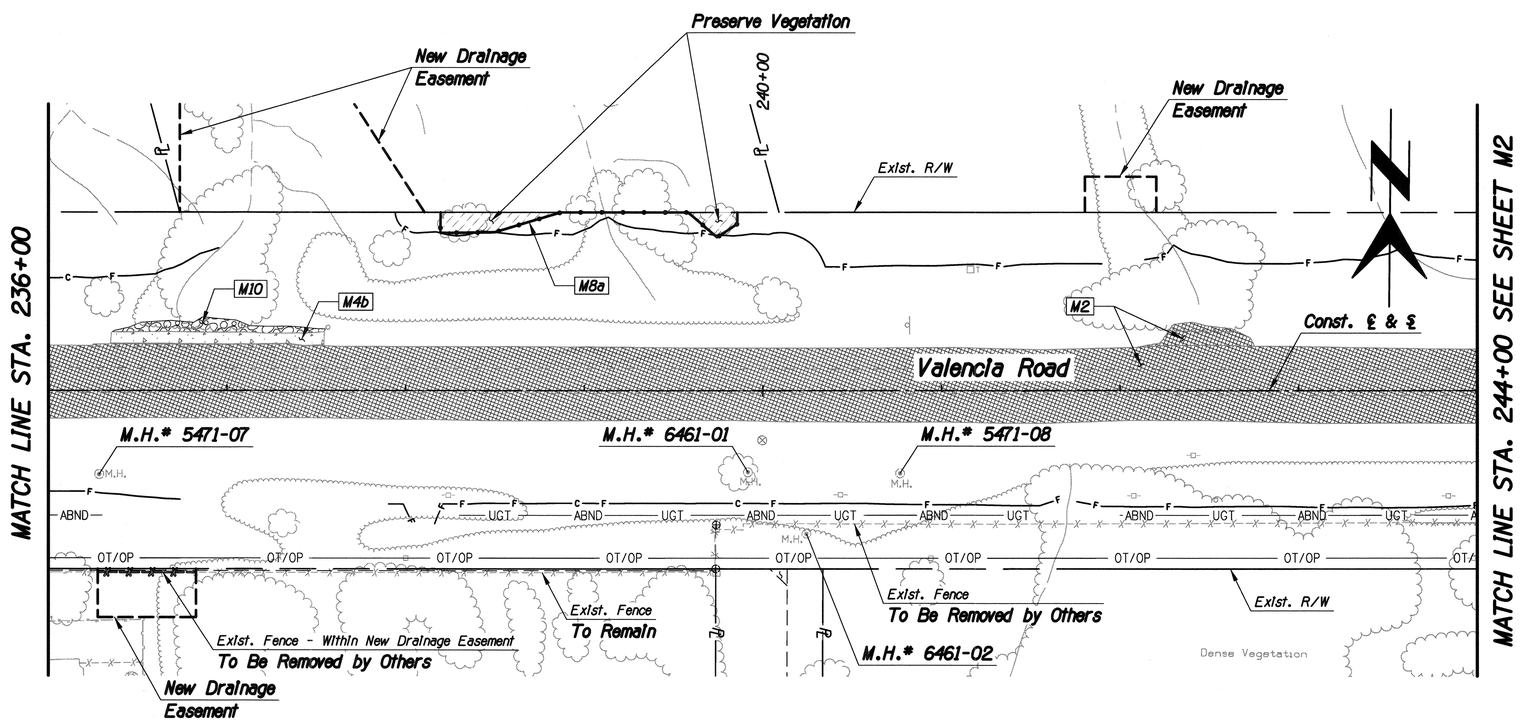

F.H.W.A. REGION	STATE	PROJECT NO.	SHEET NO.	TOTAL SHEETS	AS BUILT
9	ARIZ.	STP-PPM-0(230)A			
		0000 PM PPM SS975 01C			

Item No.	Qty.	Unit	Description
M1	73	L.F.	Sawcut Pavement
a	41	L.F.	Sta. 231+00.00, 25.3' Lt. to Sta. 231+00.00, 15.8' Rt.
b	32	L.F.	Sta. 234+86.32, 80.0' Rt. to Sta. 235+18.23, 80.0' Rt.
M2	6,431	S.Y.	Removal of Bituminous Pav't
M3	123	L.F.	Removal of Curb
a	62	L.F.	Header-Sta. 234+46.04, 16.6' Rt. to Sta. 234+86.18, 56.2' Rt.
b	61	L.F.	Header-Sta. 235+18.12, 56.6' Rt. to Sta. 235+56.96, 16.5' Rt.
M4	1,043	S.F.	Removal of Misc. Concrete
a	276	S.F.	Drop Structure-Sta. 232+36.14, 41.8' Lt. to Sta. 232+73.23, 40.9' Lt.
b	767	S.F.	Concrete Slab-Sta. 236+34.74, 26.6' Lt. to Sta. 237+54.15, 25.8' Lt.
M5	2.97	Ac.	Clear & Grub
M8	192	L.F.	Install Preservation Fencing See Detail 8 on Sheet L23
a	192	L.F.	Sta. 238+20.00, 100.0' Lt. to Sta. 238+19.00, 88.5' Lt. to Sta. 238+49.80, 89.0' Lt. to Sta. 238+87.00, 100.0' Lt. to Sta. 239+58.15, 100.0' Lt. to Sta. 239+74.40' 86.1' Lt. to Sta. 239+85.70, 93.6' Lt. to Sta. 239+85.70, 100.0' Lt.
M10	21	C.Y.	Removal of Riprap

All removals are paid for under Item No. 2020001.

Notes:

1. All sign removal information is shown on Signing Plans.
2. All water valve and meter adjustments are shown on the Water Relocation Plans.
3. Prior to clearing and grubbing, site shall be treated for buffelgrass and other invasive species. See Special Provisions 201-3.01 and 201-3.04. The location of areas of invasive species shown may have changed since the preparation of these plans. All areas containing invasive species must be treated whether shown here or not.
4. Location of preservation fencing shown on plans corresponds to conditions at time of plan preparation. Conditions may have been altered between plan preparation and construction. Fencing may be adjusted in field at the direction of the Engineer based on current field conditions.

DEMOLITION PLANS

40 0 40 80

Priscilla S. Cornelio, P.E., Director

Pima County Department of Transportation

Designed	KAM	03/2014
Drawn	KAM, JMF	03/2014
Checked	RDB	03/2014
Proj. Engr.	RDB	03/2014

No.	Revision Description	Engineer	Date

Registered Professional Engineer (Civil) CERTIFICATE NO. 13762 ROBERT DEAN BRITTAIN Date Signed 7-21-14 ARIZONA U.S.A.

Expires: 3-31-17

HDR Engineering, Inc. 5210 East Williams Circle, Suite 530 Tucson, AZ 85711-4459 (520) 584-3500

VALENCIA ROAD
WADE ROAD TO MARK ROAD
PROJECT NO. 4RTVMW

Scales: Horiz. 1"=40' Vert. 1"=4'

Sheet M1 of M11

Page 69 of 281

TRACS No. SS975 01C

Print Scale: 1:40

Pantable: 152226_PLOTORDR.TBL
Plotdriver: 152226_V6FULL_B&W_PDF.plt

Project ID: 0000000152226
Client Number: 012145

ProjectWise Directory: Pima_County_Dept_of_Transportation\PCDOT_Valencia_Mtn_Eagle_Mark\13.00_CAD\Construction Documents\Civil\Wade to Mark\08C-01.dgn
Model: B08C01

Printed By: jefrey Date: 7/21/2014 2:16:30 PM

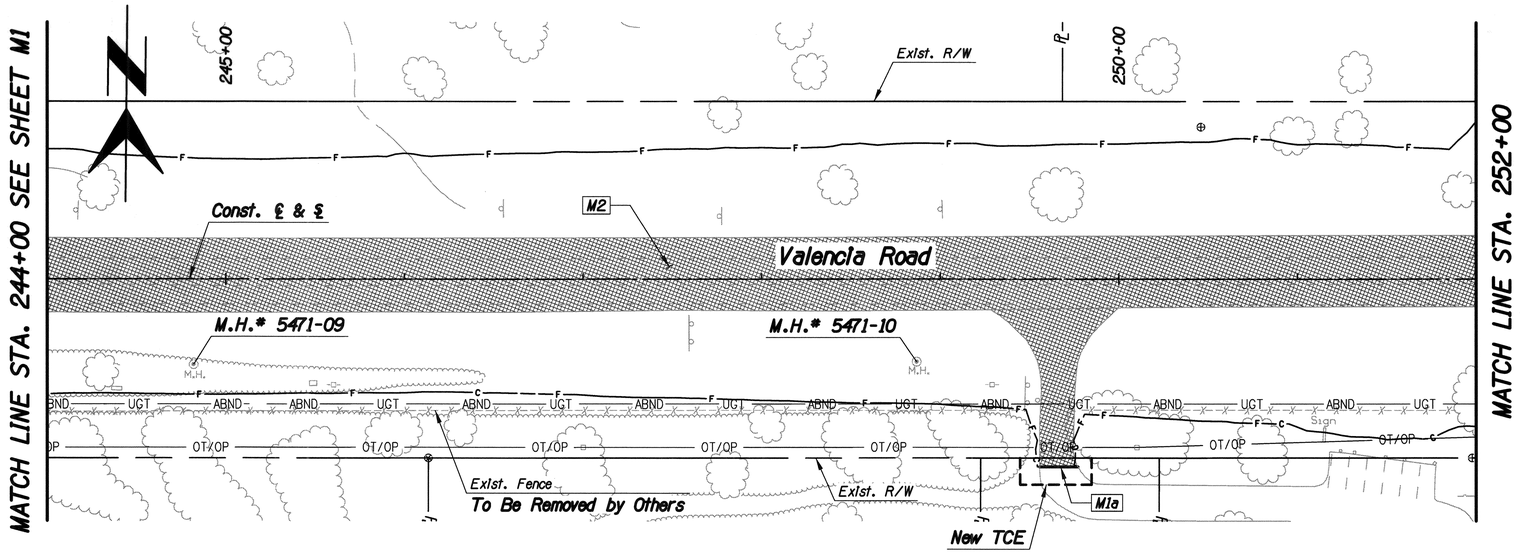

4. Location of preservation fencing shown on plans corresponds to conditions at time of plan preparation. Conditions may have been altered between plan preparation and construction. Fencing may be adjusted in field at the direction of the Engineer based on current field conditions.

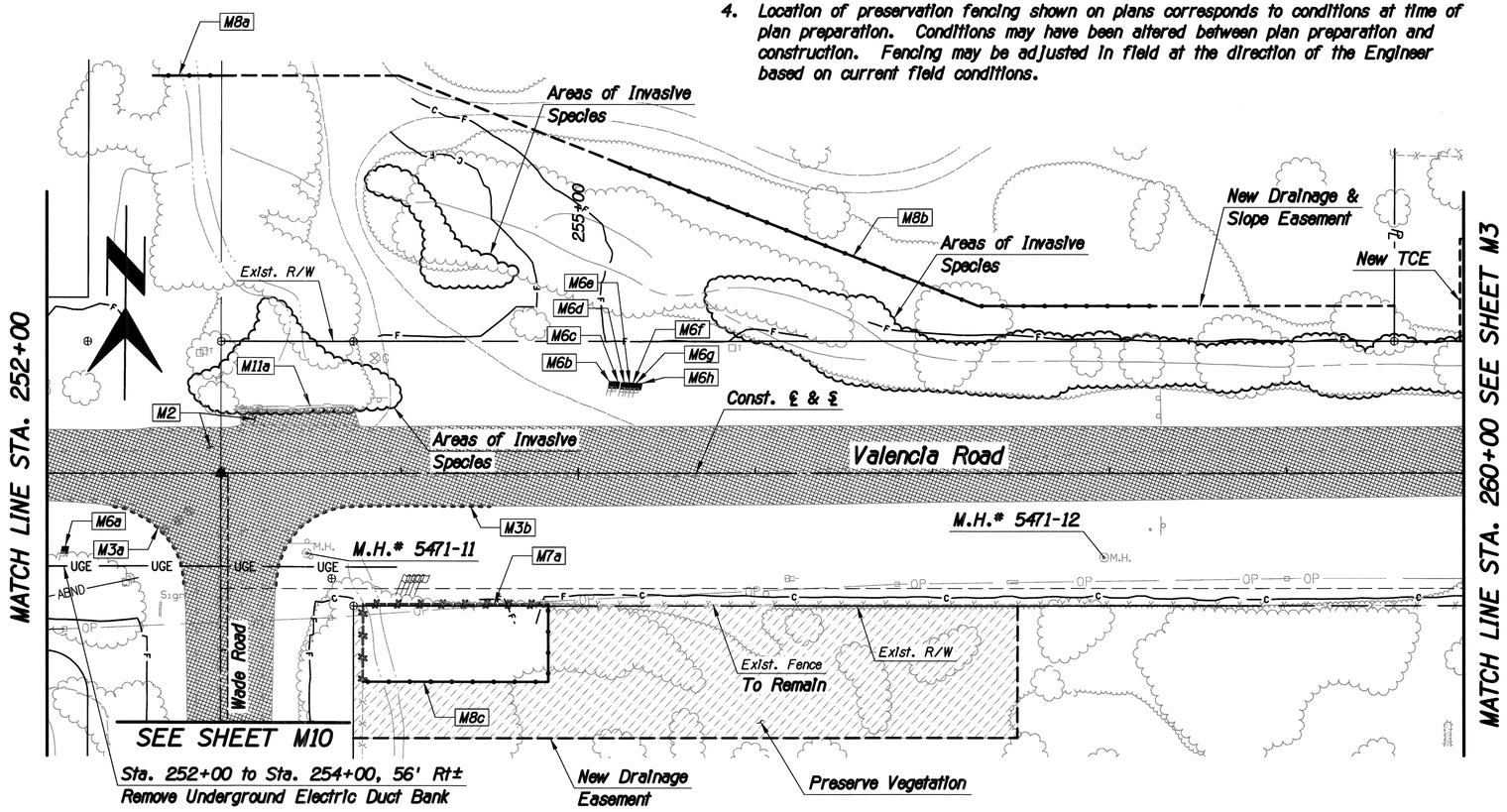

F.H.W.A. REGION	STATE	PROJECT NO.	SHEET NO.	TOTAL SHEETS	AS BUILT
9	ARIZ.	STP-PPM-0(230)A			
		0000 PM PPM SS975 01C			

Item No.	Qty.	Unit	Description
M1	21.5	L.F.	**Sawcut Pavement**
a	21.5	L.F.	Sta. 249+55.52, 96.4' Rt. to Sta. 249+74.35, 96.4' Rt.
M2	8,530	S.Y.	**Removal of Bituminous Pav't**
M3	210	L.F.	**Removal of Curb**
a	64	L.F.	Header-Sta. 252+37.73, 18.5' Rt. to Sta. 252+77.47, 62.3' Rt.
b	146	L.F.	Header-Sta. 253+28.92, 63.2' Rt. to Sta. 254+50.04, 18.3' Rt.
M5	4.26	Ac.	**Clear and Grub**
M6	1	Each	**Relocate Mailbox to Wade Road Sta. 14+35, 42' Rt.**
a	1	Each	CBU-Sta. 252+06.73, 49.3' Rt.
M6	7	Each	**Relocate Mailboxes - Detail N**
b	1	Each	CBU-Sta. 255+15.79, 44.2' Lt.
c	1	Each	CBU-Sta. 255+17.89, 44.0' Lt.
d	1	Each	Sta. 255+22.62, 43.6' Lt.
e	1	Each	Sta. 255+24.93, 43.5' Lt.
f	1	Each	Sta. 255+26.22, 43.4' Lt.
g	1	Each	Sta. 255+28.34, 43.2' Lt.
h	1	Each	Sta. 255+30.64, 43.2' Lt.
M7	149	L.F.	**Remove Fence**
a	149	L.F.	3-Rail Vinyl-Sta. 253+78, 118' Rt. to Sta. 254+83, 74' Rt.
M8	508	L.F.	**Install Preservation Fencing See Detail 8 on Sheet L23**
a	40	L.F.	Sta. 252+60.00, 225.0' Lt. to Sta. 253+00.00, 225.0' Lt.
b	319	L.F.	Sta. 255+21.73, 176.1' Lt. to Sta. 257+25.91, 95.0' Lt. to Sta. 258+25.62, 95.0' Lt.
c	149	L.F.	Sta. 253+78.11, 118.0' Rt. to Sta. 254+82.89, 118.0' Rt.
M11	1	Each	**Removal of Structures & Obstructions**
a	1	Each	Rock Wall-Sta. 253+08, 37.5' Lt. to Sta. 253+73, 38.3' Lt.

All removals are paid for under Item No. 2020001.

Notes:

1. All sign removal information is shown on Signing Plans.
2. All water valve and meter adjustments are shown on the Water Relocation Plans.
3. Prior to clearing and grubbing, site shall be treated for buffelgrass and other invasive species. See Special Provisions 201-3.01 and 201-3.04. The location of areas of invasive species shown may have changed since the preparation of these plans. All areas containing invasive species must be treated whether shown here or not.

DEMOLITION PLANS

40 0 40 80

Priscilla S. Cornello, P.E., Director
Pima County Department of Transportation

No.	Revision Description	Engineer	Date

		Date
Designed	KAM	03/2014
Drawn	KAM, JMF	03/2014
Checked	RDB	03/2014
Proj. Engr.	RDB	03/2014

Registered Professional Engineer (Civil) CERTIFICATE NO. 13762 ROBERT DEAN BRITTAIN Date Signed 3-21-14 ARIZONA U.S.A. Expires 3-31-17

HDR Engineering, Inc.
5210 East Williams Circle, Suite 530
Tucson, AZ 85711-4459
(520) 564-2600

VALENCIA ROAD
WADE ROAD TO MARK ROAD
PROJECT NO. 4RTVMW

Scales	Horiz. 1"=40' Vert. 1"=4'	Sheet M2 of M11	Page 70 of 281

TRACS No. SS975 01C

Print Scale: 1:40

Project ID: 0000000000152226
Client Number: 012145
Pentable: 152226_PLOTORDR.TBL
Plotdriver: 152226_18FULL_BW_PDF.plt

ProjectWise Directory: Pima_County_Dept_of_Transportation\PCDOT_Valencia_Mtn_Eagle_Mark\13.00_CAD\Construction Documents\Civil\Wade to Mark\08C-01.dgn
Model: B08C02

Printed By: jefrey Date: 7/21/2014 2:16:31 PM