4RTVWE – Valencia Road (Wade Road to Ajo Way)

Draft Final Traffic Memorandum

October 17, 2016

Prepared for:
Pima County Department of Transportation

Prepared by:
Kimley-Horn and Associates, Inc.
333 E. Wetmore Road, Suite 280
Tucson, AZ 85705

4RTVWE – Valencia Road (Wade Road to Ajo Way)

Draft Final Traffic Memorandum

October 17, 2016

Prepared for:

Pima County Department of Transportation

Prepared by:

Kimley-Horn and Associates, Inc.

333 E. Wetmore Road, Suite 280

Tucson, AZ 85705

Draft Final Traffic Engineering Memorandum

4RTVWE - Valencia Road (Wade Road to Ajo Hwy)

INTRODUCTION

This memorandum serves as a supplement to the July 2011 *Traffic Engineering Study for Valencia Road, Mountain Eagle Drive to Mark Road (4RTVMW and 4RTVWE).* **This memorandum's focus corridor is Valencia Road between Wade Road and Ajo Hwy, located in southwest Tucson, Arizona within unincorporated Pima County – Project # 4RTVWE.** This project will reconstruct the current roadway section into a four-lane divided roadway. The roadway improvements will provide capacity for future traffic demands to reduce congestion and improve safety.

PURPOSE

The purpose of the memorandum is to update and document traffic laneage and storage recommendations found in the July 2011 *Traffic Engineering Study* based on 2016 traffic count data and other relevant and available traffic studies in the area. The development and documentation of the following design inputs are critical to the completion of this project, and are provided within this Traffic Engineering Memorandum:

- Intersection geometry
- Median opening requirements;
- Turn lane storage lengths, based on PCDOT Pavement Marking Standards (Sheet No. 4-6). At SR86, ADOT PGP 430 will be used to verify minimum left and right-turn storage requirements;
- Signalization nodes; and
- Design year & ADT / heavy vehicle %.

PREVIOUS TRAFFIC STUDIES / REPORTS:

The following traffic studies/reports reflect new public infrastructure projects and development in the vicinity of the study corridor:

- *State Route 86 Traffic Analysis Study: Kinney Road to Continental Road*; February 2007
- *State Route 86: Sandario Road to Kinney Road, Final Design Concept Report (DCR)*, April 2010
- *Traffic Engineering Study for Valencia Road, Mountain Eagle Drive to Mark Road (4RTVMW and 4RTVWE)*, July 2011
- *Sendero Pass Traffic Impact Analysis (16415-P)*; August 22, 2016
- *Southwest Infrastructure Report*, 2007 (1980)
- *Sonoran Ranch Estates II – Traffic Statement and Approved Construction Plans*

The State Route 86 Traffic Analysis Study evaluated the needs of SR 86 between Kinney Road and Continental Road for years 2007 and 2030. Year 2030 traffic was forecasted using Pima Association of

Governments (PAG) travel demand model. The study recommended a traffic signal at Valencia / SR86 for year 2007 conditions. For year 2030, Valencia Road is shown to be realigned approximately 1200-feet to the east along SR86, establishing a new “T” intersection with SR86. The configuration would also result in a “T” intersection with SR86 / Airfield Drive (at the existing intersection SR86 /Valencia-Airfield). **It should be noted that while this report included the intersection relocation, the actual design by ADOT (H6806, dated 2015) moved the intersection back to where it is today.** The current intersection location also corresponds with the Ryan Airfield Master Plan.

The State Route 86 DCR recommends a new traffic signal at the existing SR86 / Valencia Road intersection. The DCR states that this signalized intersection operates at **LOS B** for both the AM and PM periods in 2030 and **LOS A** for both the AM and PM periods in 2007 (opening year with signalization).

Traffic Engineering Study for Valencia Road, Mountain Eagle Drive to Mark Road (4RTVMW and 4RTVWE) was completed in 2011. The study recommended traffic signals at the intersection of Vahalla Road, Iberia Road and Wade Road (currently signalized) based on 2030 traffic volume forecasts. Dedicated right and left turn lanes were recommended to accommodate the signalized intersections.

The Sendero Pass Traffic Analysis evaluated the traffic impacts of the proposed development situated on 837 acres of land south of Ryan Airfield. The development would have a significant impact to Valencia Twin Mustang Trail and the driveway to Lots 32,33 (intersection #22 in the TIA) are shown in Exhibit 1 above. The ultimate year 2030 Valencia Road / Twin Mustang Trail intersection recommends dual

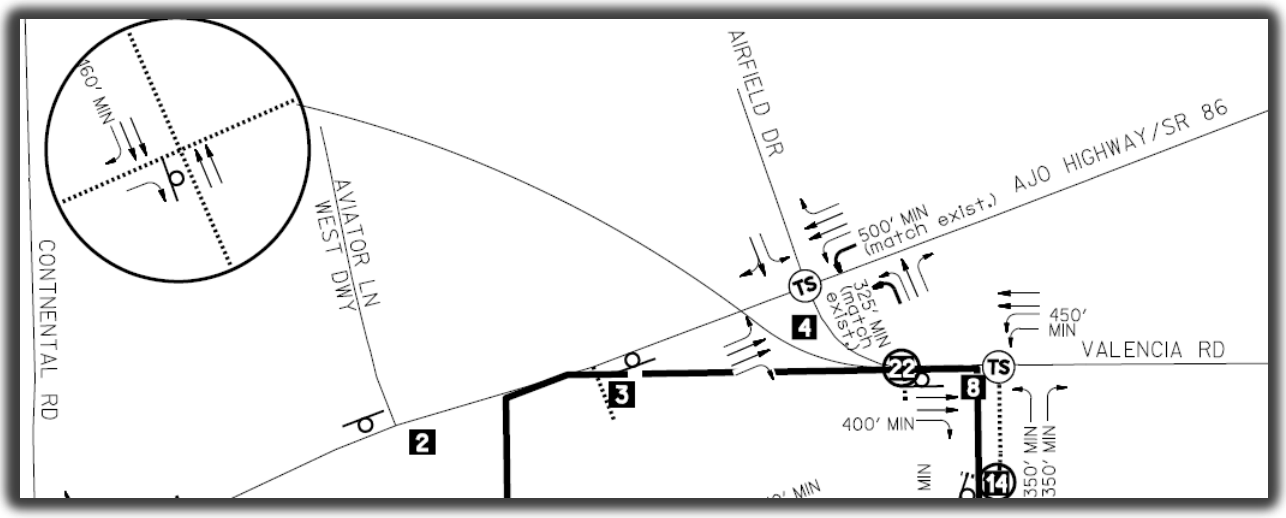

westbound to southbound left turn lanes (450-ft min), two westbound thru lanes, a dedicated eastbound to southbound right turn lane (400-ft min), and two eastbound thru lanes. In addition, Intersection # 22 shows right-in/ right-out access onto Valencia within the curve. The Sendero Pass traffic study recommends improvements to the newly constructed SR86/Valencia intersection for the 2030 horizon year. The improvements are the addition of a westbound to southbound left-turn lane, resulting in dual Lefts (500-ft min) – No additional improvements to the intersection were shown

Pima County project 4RTVWE will design the median opening locations fronting the Sendero Pass and Pomegranate Farms properties to match the Sendero Tentative Plat and the preliminary line work obtained from Pomegranate Farms. While project 4RTVWE will not construct the developments ultimate dual left turn and right turn lane configurations, the project will design the roadway width, median width, and drainage infrastructure at Twin Mustang Trail to accommodate these future laneage needs that will be constructed by the developer. Traffic signal conduit and pull boxes will also be installed with project 4RTVWE.

Southwest Infrastructure Report (SIR), updated 2007 – The SIR indicated that Pima County plans to improve Valencia Road to a four-lane divided roadway between Ajo Highway and Mark Road and that this project will be funded through the Regional Transportation Authority (RTA). The proposed improvements included: four travel lanes (two in each direction), six-foot paved shoulders, four-foot graded and landscaped shoulders and Americans with Disabilities Act (ADA) compliant pedestrian pathways.

The Sonoran Ranch Estates II traffic statement states that the original construction of offsite turn lanes associated with the original plat were still valid for this approved construction plan and are to receive no improvements. As such, project 4RTVWE will only construct the driveway and associated curb returns as well as the turn lanes accessing Reed Bunting to match existing conditions. The driveway will accommodate three lanes; 12-ft ingress, 12-ft left turn lane, and 12-ft egress. Pavement is 2.5 AC (Mix 2) / 4" AB.

Additional developments and studies that were not reviewed or made available include Pomegranate Farms and Sonoran Ranch Estates. The Pomegranate Farms development is to occur on the western portion of Valencia Road, adjacent to Sendero Pass.

EXISTING CONDITIONS

This segment of roadway is classified as Major Collector (Dated 8/19/2014 - FHWA Division Office). The Pima County Major Streets and Scenic Routes Plan (MSSR) and Ordinance establishes the entire Valencia Road project segment as Major Scenic Route and High Volume Arterial with 200-foot Right-of-Way. The posted speed limit is 45MPH.

Within the study area, Wade Road is the only signalized intersection and has recently been constructed based on the recommendations of the 2011 Traffic Study. All other intersections have the same configurations documented in the 2011 study. **Figure 1** illustrates the existing conditions at cross-streets along Valencia Road.

Traffic Count Data

Traffic count data was collected on Wednesday, April 6, 2016. The following data was collected:

- AM (7:00 AM – 9:00 AM) and PM (4:00 PM – 6:00 PM) peak period turning movement counts at the Valencia Road / Wade Road intersection.
- 24-Hour direction daily traffic volumes with vehicle classifications:
    - Valencia Road, west of Via Molino De Viento;
    - Valencia Road, between Star Diamond Place and Wade Road.

The collected 24-hour traffic tube counts (**Appendix A**, and depicted in Figure 2) revealed the following traffic patterns

- West of Via Molino De Viento, traffic volumes on Valencia Road reach 2,899 vehicles per day (VPD). This represents a 39% decrease as compared to the 2011 Traffic Study where 4,724 vpd was counted.
- Between Star Diamond Place and Wade Road, the current daily traffic volumes along Valencia reach 9,700 VPD, an increase of 7.6 percent when compared to the 2011 traffic study where 9015 vpd was counted.
- The 24-hour traffic counts indicate an approximate 9% K-Factor.

The turning movement count data collected at Wade Road is provided in **Appendix B**.

The AM/PM peak period turning movement volumes at Valencia Road and Wade Road illustrated the following traffic patterns, see **Figure 2**:

- The 2016 turning movement counts show that the total entering traffic volumes at the Valencia Road and Wade Road intersection during the AM peak period is 1,158 vehicles per hour. This is a negligible percent increase in traffic volumes (0.2%) as compared to the turning movement counts collected in 2011.
- For the PM peak period, the 2016 turning movement counts show that the total entering traffic volumes is 965 vehicles per hour. In 2011, the intersection had 1,452 vehicles per hour. Which

indicates a 33.5% reduction in traffic at the intersection. The recently constructed extension of Camino Verde to the south of Valencia Road has changed traffic patterns in the area.

- The direction split (D-factor) of the traffic for the 24-hour period is around 50% for both the EB and WB. For the AM peak period, the heavy direction of traffic is in the EB direction and the PM peak period shows the heavy direction of traffic in the WB direction.

Heavy Vehicle Percentage

Vehicle classification collected with the 24-hour traffic volume data collection on April 6, 2016. The Federal Highway Association (FHWA) defines heavy vehicles that fall within the categories of "2 Axle 6 Tire" through ">6 Axle Multi". The existing vehicle classifications are summarized in **Table 1**.

Table 1 - Vehicle Classification Data

Bikes	Cars & Trailers	2 Axle Long	Bus	2 Axle 6-Tire	3 Axle Single	4 Axle Single	<5 Axle Double	5 Axle Double	>6 Axle Double	5 Axle Multi	6 Axle Multi	>6 Axle Multi
Valencia, West of Via Molino De Viento												
9	1866	622	10	375	4	1	10	2	0	0	0	0
0.3%	64.4%	21.5%	0.3%	12.9%	0.1%	0.0%	0.3%	0.1%	0.0%	0.0%	0.0%	0.0%
Valencia Road, Between Star Diamond Place and Wade Road												
17	6628	1833	99	1047	30	6	24	3	5	7	1	0
0.2%	68.3%	18.9%	1.0%	10.8%	0.3%	0.1%	0.2%	0.0%	0.1%	0.1%	0.0%	0.0%

The vehicle classifications along Valencia Road, west of Via Molino De Viento, show that the heavy vehicle percentage for the eastbound direction is 6.6% and the westbound direction is 19.8%. A total of 13.4% of heavy vehicles were observed for both directions. Between Star Diamond Place and Wade Road, Valencia Road was observed to have 5.0% for the eastbound direction and 17.7% for the westbound direction. The total heavy vehicle percentage is 11.6%, which is lower than what was observed west of Via Molino since there is a higher volume of light-duty vehicles further east of the study area. The 24-hour count data with vehicle classifications are in **Appendix A.**

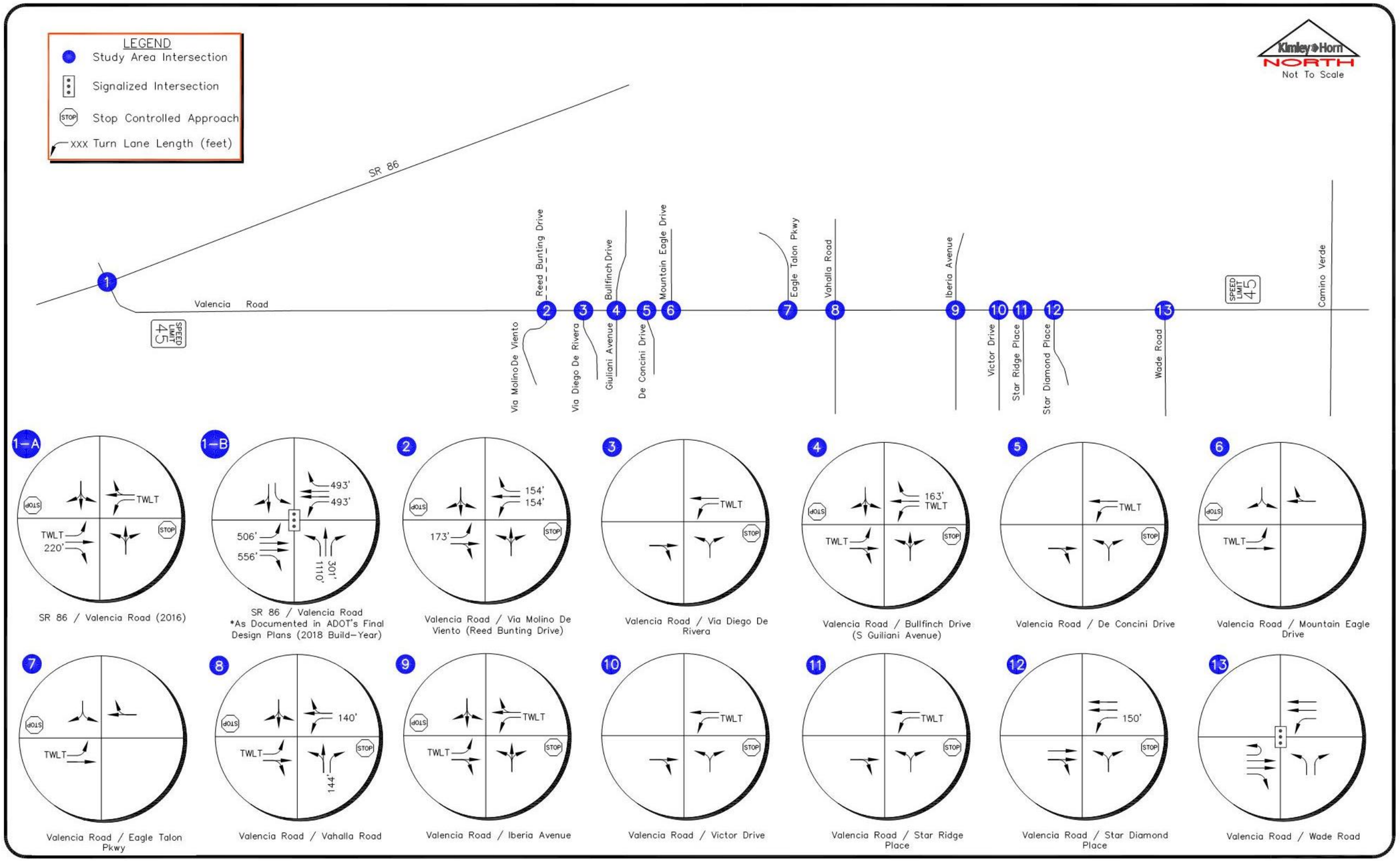

Figure 1 - Existing Conditions

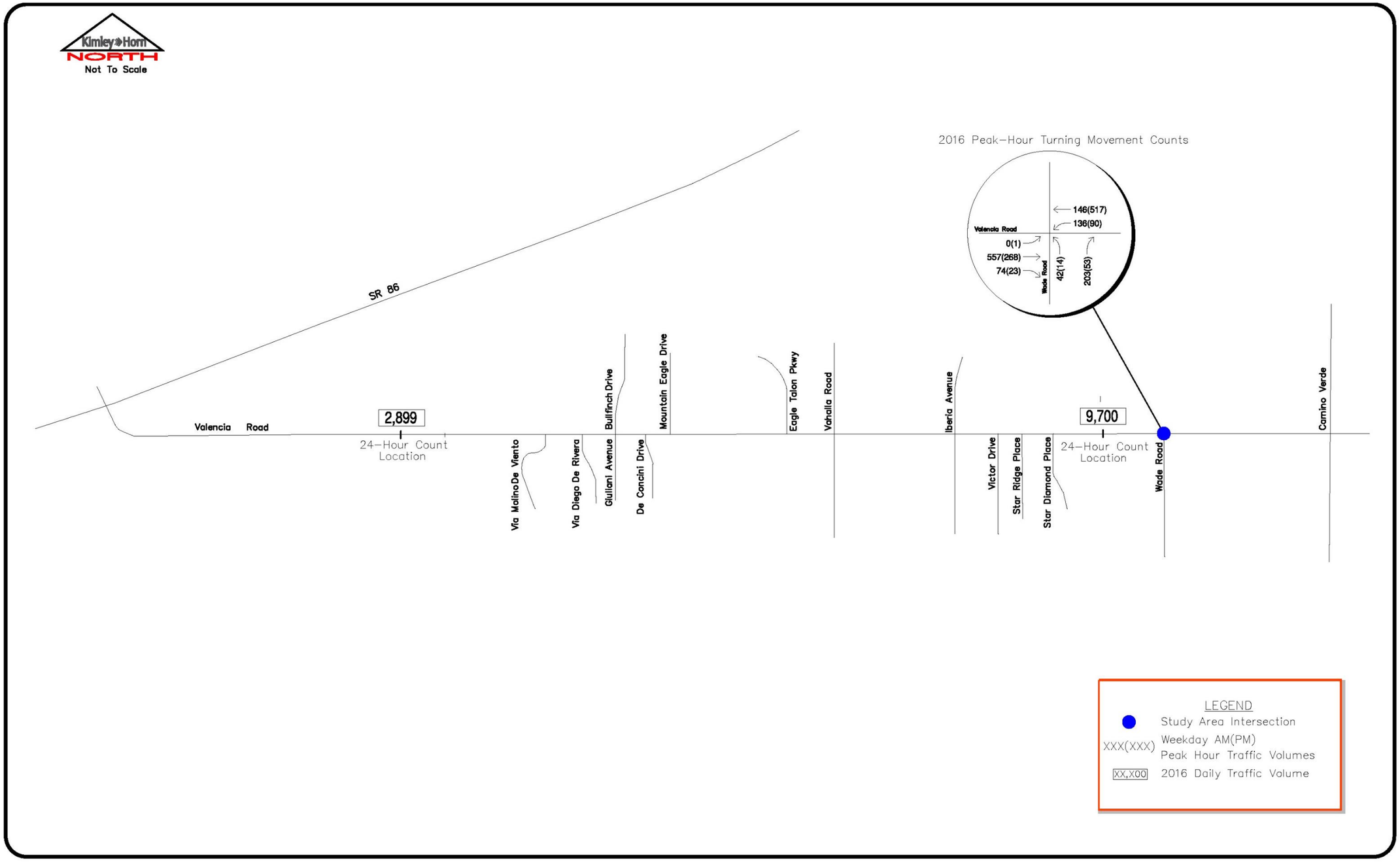

Figure 2 - 2016 Traffic Volumes

Crash Summary

A crash analysis was performed for study area intersections and segments. The historic crash data for intersections and segments along Valencia Road during the period of August 1, 2011 to August 31, 2015 was provided by PCDOT and is included in **Appendix C**. In total, 24 crashes occurred during the analysis period.

Intersection related crashes are summarized in **Table 2**, and segment related crashes are summarized in **Table 3**.

The crash rates are compared to the average crash rates documented in the PCDOT Safety System Management Report (2013). Study area intersections that are not listed indicate that no crashes occurred at them during the analysis period.

Table 2 - Intersection Crash Data Summary

	Valencia Road at Victor Drive		Valencia Road at Iberia Avenue		Valencia Road at Vahalla Road		Valencia Road at Mountain Eagle Drive		Valencia Road at De Concini	
Severity	**Occurrence**	**%**	**Occurrence**	**%**	**Occurrence**	**%**	**Occurrence**	**%**	**Occurrence**	**%**
Fatal	0	0%	0	0%	0	0%	0	0%	0	0%
Class 4 Injury	0	0%	0	0%	1	50%	0	0%	0	0%
Class 3 Injury	0	0%	1	25%	1	50%	0	0%	0	0%
Class 2 Injury	0	0%	0	0%	0	0%	0	0%	1	100%
Bodily Injury	0	0%	0	0%	0	0%	0	0%	0	0%
PDO	1	100%	3	75%	0	0%	1	100%	0	0%
Total Crashes	1	-	4	-	2	-	1	-	1	-
Severity Index	1.00	-	1.25	-	3.90	-	1.00	-	2.00	-
Average Severity Index	1.44	-	1.44	-	1.44	-	1.44	-	1.44	-
Crash Type	**Occurrence**	**%**	**Occurrence**	**%**	**Occurrence**	**%**	**Occurrence**	**%**	**Occurrence**	**%**
Turning	0	0%	1	25%	1	50%	0	0%	0	0%
Angle	0	0%	0	0%	1	50%	0	0%	0	0%
Rear-end	1	100%	1	25%	0	0%	1	100%	1	100%
Out of Control	0	0%	0	0%	0	0%	0	0%	0	0%
Sideswipe	0	0%	0	0%	0	0%	0	0%	0	0%
Fixed Object	0	0%	0	0%	0	0%	0	0%	0	0%
Backing	0	0%	0	0%	0	0%	0	0%	0	0%
Head on	0	0%	1	25%	0	0%	0	0%	0	0%
Pedestrian	0	0%	0	0%	0	0%	0	0%	0	0%
Animal	0	0%	0	0%	0	0%	0	0%	0	0%
Miscellaneous	0	0%	1	25%	0	0%	0	0%	0	0%
Total Crashes	1	-	4	-	2	-	1	-	1	-
Daily ADT	9,700	-	9,700	-	9,700	-	2,899	-	2,899	-
Crash Rate	0.06	-	0.23	-	0.11	-	0.19	-	0.19	-
Average Crash Rate	0.39	-	0.39	-	0.39	-	0.39	-	0.39	-

No study area intersections exhibited a crash rate higher than the PCDOT Safety Management System Management Report three-year average crash rate of 0.39 crashes per million entering vehicles (unsignalized intersections). The unsignalized intersections of Valencia Road / Vahalla Road and Valencia Road / De Concini exhibit a severity index higher than the average severity index for all unsignalized intersections within Pima County. Each intersection that experienced crashes is summarized below.

Valencia Road at Victor Drive Intersection

This unsignalized intersection had a crash rate of 0.06 crashes per million entering vehicles and a severity index of 1.00, a value lower than the Pima County severity index average of 1.44. Only 1 rear-end crash occurred at this intersection which resulted in Property Damage Only (PDO).

Valencia Road at Iberia Avenue Intersection

This unsignalized intersection had a crash rate of 0.23 crashes per million entering vehicles and a severity index of 1.25, a value lower than the Pima County severity index average of 1.44. A total of 4 crashes occurred at this intersection. The crash types include Turning, Head-On, and Rear-end collisions.

Valencia Road at Vahalla Road Intersection

This unsignalized intersection had a crash rate of 0.11 crashes per million entering vehicles and a severity index of 3.90, a value higher than the Pima County severity index average of 1.44. The crash types involved Turing and Angle related crashes with Class 4 Injury and Class 3 Injury severities.

Valencia Road at Mountain Eagle Drive Intersection

This unsignalized intersection had a crash rate of 0.19 crashes per million entering vehicles and a severity index of 1.00, a value lower than the Pima County severity index average of 1.44. One rear-end crash occurred that resulted in a PDO.

Valencia Road at De Concini Intersection

This unsignalized intersection had a crash rate of 0.19 crashes per million entering vehicles and a severity index of 2.00, a value higher than the Pima County severity index average of 1.44. One rear-end crash occurred that resulted in a Class 2 Injury.

Table 3 - Segment Crash Data Summary

	Valencia Road from Ajo Hwy to Mountain Eagle Drive (9600-8200)		Valencia Road from Mountain Eagle Drive to Iberia Avenue (8200-7400)		Valencia Road from Iberia Avenue to Wade Road (7399-7000)	
Severity	**Occurrence**	**%**	**Occurrence**	**%**	**Occurrence**	**%**
Fatal	0	0%	0	0%	0	0%
Class 4 Injury	0	0%	0	0%	0	0%
Class 3 Injury	1	17%	2	40%	2	50%
Class 2 Injury	2	33%	1	20%	0	0%
Bodily Injury	0	0%	0	0%	0	0%
PDO	3	50%	2	40%	2	50%
Total Crashes	6	-	5	-	4	-
Severity Index	1.50	-	1.60	-	1.50	-
Average Severity Index	1.60		1.60	-	1.60	-
Crash Type	**Occurrence**	**%**	**Occurrence**	**%**	**Occurrence**	**%**
Turning	0	0%	0	0%	0	0%
Angle	0	0%	0	0%	0	0%
Rear-end	1	17%	2	40%	2	50%
Out of Control	0	0%	0	0%	0	0%
Sideswipe	0	0%	1	20%	2	50%
Fixed Object	2	33%	0	0%	0	0%

	Valencia Road from Ajo Hwy to Mountain Eagle Drive (9600-8200)		Valencia Road from Mountain Eagle Drive to Iberia Avenue (8200-7400)		Valencia Road from Iberia Avenue to Wade Road (7399-7000)	
Severity	**Occurrence**	**%**	**Occurrence**	**%**	**Occurrence**	**%**
Backing	0	0%	0	0%	0	0%
Head on	1	17%	0	0%	0	0%
Pedestrian	0	0%	2	40%	0	0%
Animal	1	17%	0	0%	0	0%
Miscellaneous	1	17%	0	0%	0	0%
Total Crashes	6	-	5	-	4	-
Daily ADT	2,899	-	9,700	-	9,700	-
Crash Rate	1.13	-	0.28	-	0.23	-
Average Crash Rate	1.42	-	1.42	-	1.42	-

For roadway segments, the crash rates and Severity Indices are compared to the average crash rates and Severity Indices provided in the PCDOT Safety System Management Report (2013) based on roadway segments with ADTs < 10,000 VPD.

Each of the three Valencia Road segments had crash rates below the average crash rate of 1.42 crashes per million vehicle-miles. The Severity Index for each of the segments were below or equal to the Average Severity Index of 1.60.

Valencia Road from Ajo Hwy to Mountain Eagle Drive

This segment had a crash rate of 1.13 crashes per million vehicle-miles and a severity index of 1.50. Reported crash types include Sideswipes, Head On, Animal, and Rear-End. Crash severity included PDO, Class 3 Injury, and Class 2 Injury.

Valencia Road from Mountain Eagle Drive to Iberia Avenue

This segment had a crash rate of 0.28 crashes per million vehicle-miles and a severity index of 1.60. Two pedestrian related crashes were reported. Other reported crash types include Rear-end and Sideswipes. Crash severity included PDO, Class 3 Injury, and Class 2 Injury.

Valencia Road from Iberia Avenue to Wade Road

This segment had a crash rate of 0.23 crashes per million vehicle-miles and a severity index of 1.50. Reported crash types include Rear-end and Sideswipes. Crash severity included Class 3 Injuries and PDO crash severities.

FUTURE TRAFFIC CONDITIONS

This section documents the development of 2040 design hour volumes which serve as the foundation for recommended improvements.

Pima Association of Governments maintains and regularly updates the regional travel demand model (TDM). Population, land use, and development assumptions were recently updated in the travel demand model, in support of the PAG 2045 Regional Mobility and Accessibility Plan (RMAP). As the 2045 regional travel demand model represents the best information available, the 2045 model served as the basis for derivation of 2040 design hour volumes.

A comparison of 2040 PAG travel demand model (developed for the 2040 PAG Regional Transportation Plan), and the updated 2045 travel demand model demonstrated that the 2040 model included significantly more new development and population, than is now considered reasonable.

Illustrative of this differentiation, the 2045 PAG TDM forecasts Valencia Road to have 18,800 VPD west of Via Molin De Vento and 30,000 VPD to the east towards Wade Road. In contrast, the PAG 2040 model projected these segments to include 33,000 and 48,000 VPD, respectively. A summary of the traffic forecast is shown in **Table 4**. The 2040 design volumes are also summarized in the table.

Table 4 - Traffic Volume Forecast

Roadway	Segment	2016	PAG 2040 Forecast	Annual Growth Rate (%)	PAG 2045 Forecast	Annual Growth Rate (%)	2040 Design Volumes	Annual Growth Rate (%)
Valencia Road	Ajo Hwy to Via Molino de Viento	2,899	33,228	10.7	18,800	6.4	25,000	9.24
Valencia Road	Victor Drive to Wade Road	9,700	47,608	6.9	35,000	4.0	35,000	5.36

In terms of traffic volumes, there is a large disparity between various traffic forecast sources for the Valencia Road and SR 86 area. These include the Sendero Pass Traffic Impact Analysis with a 2030 horizon year, the Pima Association of Governments (PAG) 2040, and PAG 2045 forecasted volumes. **Figure 3** illustrates the forecasted volumes for the area. Note that the Sendero Pass study assumes a 2% growth in traffic volumes per year. The design team has agreed that this growth rate is reasonable to capture the potential traffic generated by the Pomegranate Farms development (currently under study) and any other background traffic. Details and justification of these design parameters are provided in Note to File memorandum submitted to Pima County (**Appendix D**).

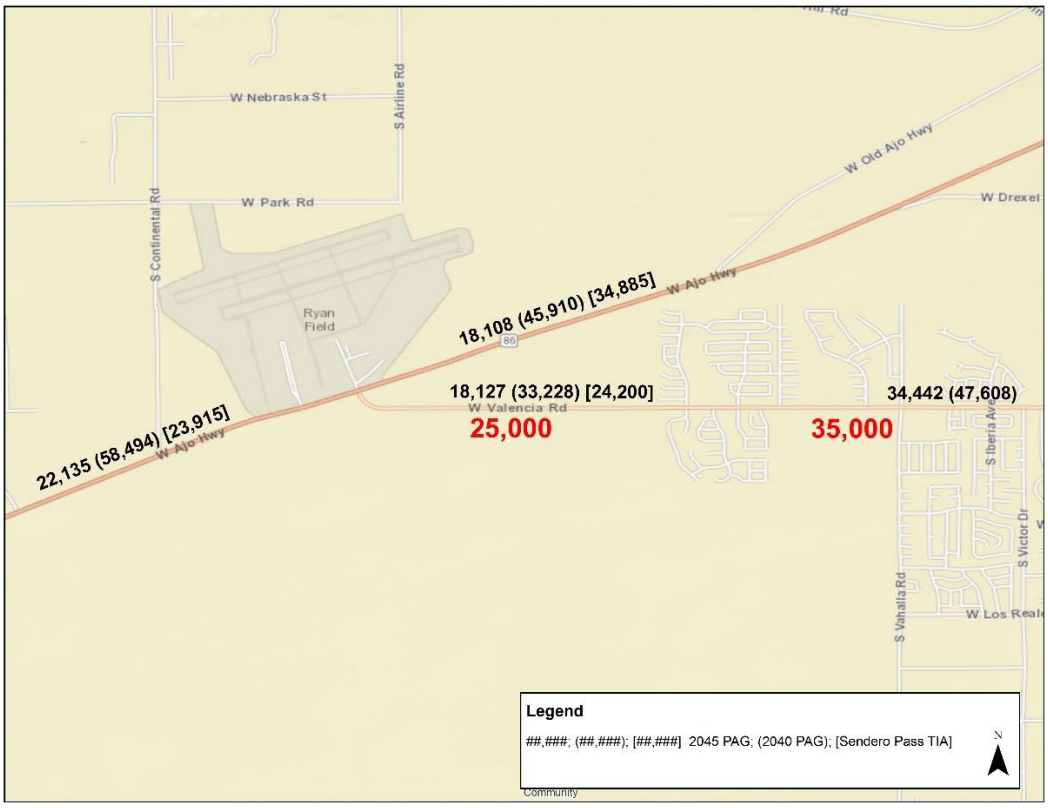

Figure 3 – Forecasted Average Daily Traffic Comparison

As such, considering the large disparity between various traffic forecast sources for the Valencia Road corridor, the following design year 2040 ADTs will be used for design:

- **25,000-VPD - SR86 to Via Molino De Viento**
- **35,000-VPD - Via Molino De Viento to Wade Rd**

Based on the 2012 Florida Department of Transportation (FDOT) published 2012 service volume tables, Valencia Road, when improved to a four-lane median divided, signalized arterial (with a capacity of 39,800 VPD), will perform at LOS C or better. Thus, the proposed 4-lane median divided cross-section will provide performance that exceeds county-required standards, as per Pima County Roadway Design Manual requirements (Section 3.15).

Forecasted traffic volumes at key intersections are shown in **Figure 4**. The traffic volumes were forecasted using the 2040 design year growth rates. A traffic capacity analysis was performed for the key intersections within the project limits. The results are shown in **Table 5**.

Table 5 – 2040 Future Capacity Analysis for Key Intersections

Intersections	EB			WB			NB			SB			Intersection LOS	Traffic Control
	L	T	R	L	T	R	L	T	R	L	T	R		
SR 86 / Valencia Road*														
AM Peak Hour	-	D	A	E	B	A	C	C	C	D	D		C	Signalized
PM Peak Hour	-	D	A	D	B	A	E	-	A	D	D		C	
Valencia Road / Mountain Eagle Drive														
AM Peak Hour	A	A	-	A	A	-	-	-	-	D	-	D	D	Stop-Sign Controlled
PM Peak Hour	A	A	-	A	A	-	-	-	-	E	-	E	E	
Valencia Road / Iberia Road														
AM Peak Hour	A	B	B	B	A	A	A	A	C	C	A	C	B	Signalized
PM Peak Hour	B	B	B	A	C	C	C	A	D	C	A	C	C	

**Assumes a dual left-turn lane per the Sendero Traffic Impact Analysis*

Traffic movement counts were not collected at Vahalla Road and the existing traffic volumes documented in the 2011 study did not appear to be reliable in representing the existing conditions. To confirm the design year geometry requirements for Vahalla Road, a sensitivity analysis was performed. The analysis estimated the number of single-family units (approximately 159 units south and 110 units north of Valencia Road) that would be expected to utilize Vahalla Road. The Institute of Transportation Engineers (ITE) Trip Generation Manual (9th Edition) was used to determine the conservative number of trips. Based on the trip generation. The estimated AM and PM peak-hour turning movement volumes forecasted for design year 2040 are illustrated in **Figure 3**.

Table 6 - Vahalla Road Sensitivity Analysis

Intersections	EB			WB			NB			SB			Intersection LOS	Traffic Control
	L	T	R	L	T	R	L	T	R	L	T	R		
Vahalla Road / Valencia Road														
AM Peak Hour	B	C	B	B	A	C	B	B	C	C	B	B	B	Signalized
PM Peak Hour	C	C	A	B	B	A	B	B	A	C	C	A	B	

Table 6 represents the capacity analysis for 2040 design-year conditions. With the proposed signalization at Vahalla Road, adequate LOS is anticipated with conservative growth. Vehicle queueing at the turning lanes are anticipated to be below the Pima County minimum storage length requirements. The maximum 95th percentile queue that is achieved during the evaluation is 95' for the northbound right-turn movement.

Overall, the intersection evaluated for future design-year conditions demonstrate adequate performance. Based on the review of queue lengths that can be anticipated, minimum Pima County turn-lane storage length of 150' will provide adequate storage, with the exception of SR 86 / Valencia Road (discussed in the next section). Output files from the traffic analysis can be reviewed in **Appendix E**.

PROPOSED IMPROVEMENTS

The proposed improvements for Valencia Road are documented in this section. Intersection improvements were maintained from the 2011 Traffic Study except where the proposed ¼ mile (approximate) spacing median openings would restrict movements as recent traffic data collection demonstrated little change in terms of traffic volumes.

Design Speed

Valencia Road will maintain the existing 45 MPH posted speed limit. A design speed of 50 MPH is recommended.

Design Volumes

As described in the previous section, the 2040 design ADTs were developed for the Valencia Road project. These volumes are based on the growth rates derived from the PAG 2045 TDM forecast.

- 25,000 VPD, west of Via Molino De Viento/Reed Bunting Drive
- 35,000 VPD, west of Wade Road

Assuming a 9% K-factor derived from 24-hour traffic counts collected in 2016, the Design Hour Volumes (DHV) include:

- 2,250 VPH, west of Via Molino De Viento/Reed Bunting Drive
- 3,150 VPH, west of Wade Road

Median Openings

For existing cross-streets, full median openings will be provided at the following:

- Via Molino De Viento
- Bullfinch Drive
- Mountain Eagle Drive
- Vahalla Road
- Iberia Avenue
- Victor Drive (Left-turn out only)
- Star Ridge Place

Turn Lanes

Note that Pima County recommends that the signalized intersection approaches of Valencia Road / Vahalla Road and Valencia Road / Iberia Road be designed to include dedicated right-turn and left-turn lanes when geometrically feasible. The inclusion of right-turn lanes for the key non-signalized intersections will be based on Pima County Right-Turn Lane Warrants for multi-lane roads, **Table 7**.

Table 7 –Pima County Right-Turn Lane Warrant

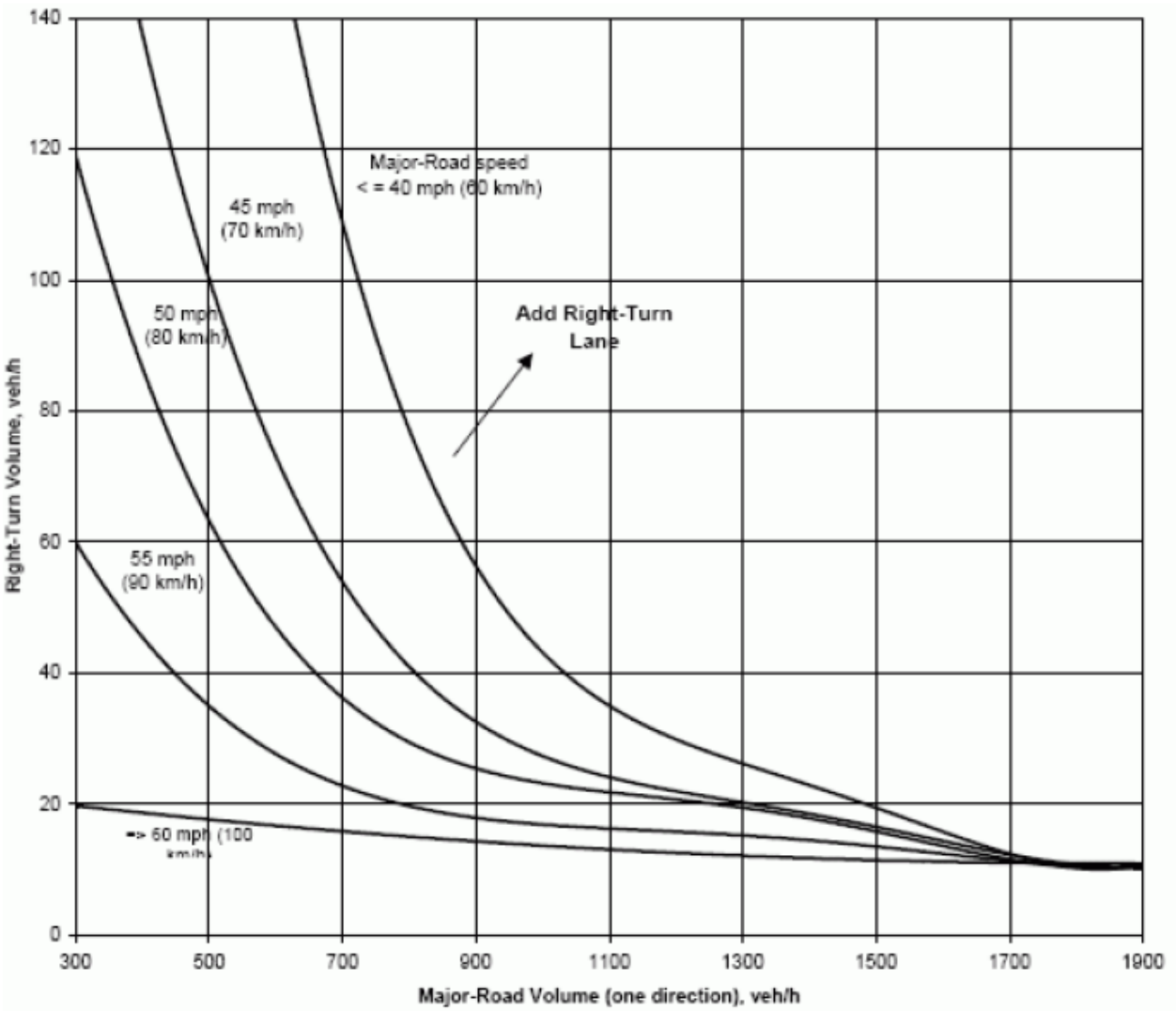

The turn-lane analysis using the forecasted volumes in **Figure 3** and assumed trip generation shows that right-turn lanes are warranted at the following approaches:

- WB approach at Valencia Road / Mountain Eagle Drive
- WB approach at Valencia Road / Vahalla Road
- EB approach at Valencia Road / Vahalla Road
- WB approach at Valencia Road / Iberia Road
- WB approach at Valencia Road / Eagle Talon Parkway

Additional Design Considerations

The following intersection configurations will be impacted by the construction of the raised median. **Figure 4** contains an illustration of the proposed intersection configurations.

SR 86 / Valencia Road

The northbound Valencia Road approach was documented to have a single left-turn lane according to ADOT's final design plans. A sensitivity analysis was performed based on the 2013 traffic volumes at the intersection to confirm the adequacy of the single left-turn lane, capacity analysis summary provided in **Table 5** of the previous section.

Because the Valencia Road approach is within the vicinity of an ADOT facility, ADOT's Traffic Engineering Guidelines and Processes (Section 400) for Turn Lane Design was used to determine the design storage length. According to the guidelines:

- Storage length = braking distance + queue length

The braking distance (Table 430-2 per the ADOT guidelines) is assumed to be based on the speed recommended for the curve approaching SR 86. ADOT's final design plans recommend a Curve Warning Sign and a 30 MPH warning speed plaque be posted.

- Assuming a 35 MPH curve design speed, the desirable ADOT breaking distance is 115'.
- Alternatively, the minimum breaking distance for 45 MPH is 85'.
- The maximum northbound left turn queue lengths occur in the PM (See Synchro reports) and was calculated between 503' (SimTraffic) and 556'. The maximum NB RT turn queue was 339 in the AM.
- Therefore, the maximum NB LT Storage Length Need = 115' + 556' = 671'.

Therefore, the provided storage lengths in the current design of 685' (NB LT) and 665' (NB RT) exceed the storage needs. The traffic analysis assumes that dual WB left-turns along SR86 are in-place in year 2040.

Valencia Road / Via Molino De Viento (Reed Bunting Drive)

This intersection will maintain the existing northbound stop controlled approach and have a full median opening. The storage lengths for the southbound approach turn-lanes will be determined based on the Sonoran Ranch Estates II development.

Valencia Road / Via Diego De Rivera

The raised median will restrict northbound left-turns and allow only right-turn in / right-turn out movements. The existing northbound stop controlled approach will be maintained.

Valencia Road / Bullfinch Drive (S. Guiliani Avenue)

This intersection will maintain the existing northbound/southbound stop controlled approach and have a full median opening. The eastbound/westbound left-turn lanes are recommended to have a minimum storage length of 150'.

Valencia Road / De Concini Drive

The raised median will restrict northbound left-turns and allow only right-turn in / right-turn out movements. The existing northbound stop controlled approach will be maintained.

It was noted that this intersection exceeds Pima County's severity index for intersection related crashes. As referenced in the FHWA Crash Modification Factor Clearinghouse, the presence of a median that would restrict movements may reduce all crash types by 22% and reduce the severity index.

Valencia Road / Mountain Eagle Drive

This intersection will maintain the existing southbound stop controlled approach and have a full median opening. The eastbound/westbound left-turn lanes are recommended to have a minimum storage length of 150'. A 150' westbound right-turn lane is also recommended.

Valencia Road / Eagle Talon Parkway

The raised median will restrict southbound left-turns and allow only right-turn in / right-turn out movements. The existing southbound stop controlled approach will be maintained. A 150' westbound right-turn lane is also recommended

Valencia Road / Vahalla Road

This intersection is recommended to have a traffic signal installed, consistent with the 2011 recommendation. Preliminary traffic signal warrants are not met for opening year, however this intersection should be monitored for traffic signal installation as development in the area occurs. The northbound/southbound approaches are recommended to have dedicated left-turn and right-turn lanes with 150' storage length. The eastbound/westbound left-turn and right-turn lanes are recommended to have a minimum storage length of 150'. The minimum lengths were confirmed to be adequate by performing a sensitivity analysis with reference to the Institute of Transportation Engineers (ITE) Trip Generation Manual (9th Edition).

It was noted that this intersection exceeds Pima County's severity index for intersection related crashes. As referenced in the Highway Safety Manual (HSM), the installation of a traffic signal may reduce crashes of all severities by 44% and reduce the severity index

Valencia Road / Iberia Avenue

This intersection is recommended to have a traffic signal installed, consistent with the 2011 recommendation. Preliminary traffic signal warrants are not met for opening year, however this intersection should be monitored for traffic signal installation as development in the area occurs. The existing northbound/southbound approach configurations are recommended to include a dedicated left-turn lane with a shared thru/right-turn lane. The eastbound/westbound left-turn lanes are recommended to have a minimum storage length of 150. Based on drainage constraint, a 110' dedicated left-turn lane for the SB

approach and 105' dedicated left-turn lane for the NB approach is recommended. A right-turn (150') lane is warranted for the westbound approach of the intersection.

Valencia Road / Victor Drive

The raised median will allow westbound left-turns and northbound left-turns. Due to the vicinity of the Star Ridge Place median opening, a storage length of 85' and 122' bay taper would have to be implemented. Note that this is below Pima County requirements. The existing northbound stop controlled approach will be maintained.

Valencia Road / Star Ridge Place

This intersection will maintain the existing southbound stop controlled approach and have a full median opening. A westbound 150' left-turn lane into Star Ridge Place is recommended. Due to the vicinity of Victor Drive, a storage length of 85' and a 122' bay taper would have to be implemented. Note that this is below Pima County requirements. The existing northbound stop controlled approach will be maintained.

Valencia Road / Plaza Naranja (future development)

This intersection will provide access to the future Diablo Village development (see **Figure 4**). A full median opening is recommended to accommodate the future development.

Valencia Road / Calle Diablo Drive (future development)

This intersection provides additional access to the future Diablo Village development (see **Figure 4**). Based on the minimum distance (660') from the full median opening at Iberia Avenue, it is recommended to provide a right-in/right-out configuration since the distance between Iberia and Calle Diablo is less than 660'.

Lighting Recommendation

Based on the 2012 *FHWA Lighting Handbook, Analysis for Lighting Needs,* lighting is required at all signalized intersections. Thus, lighting is required at the intersection of Valencia Road / Vahalla Road and Valencia Road / Iberia Avenue.

For non-signalized intersections, the FHWA presents an example for prioritizing lighting needs shown in **Table 8**. Since the crash data doesn't show significant night-time crashes, intersection lighting should be based on the major-street ADT. The ADT on Valencia Road (> 5,000 VPD) places lighting as a high priority when comparing to the thresholds provided in the table. It is recommended that each intersection has lighting present.

Table 8 - Street Light Installation by Functional Class

Major Street Functional Classification				
	Principal Arterial (TH)	**Minor Arterial (TH or CSAH)**	**Collector (CSAH or CR)**	**Local (CR or TWN Rd)**
Priority	Major street volumes in vehicles per day (% of major street volume that is recommended on the minor street)			
Low	0-2000 (10%)	0-1000 (10%)	0-500 (10%)	0-250 (10%)
Moderate	2,000-5,000 (15%)	1,000-2,000 (15%)	500-1,000 (15%)	250-500 (15%)
High	>5,000	>2,000	>1,000	>500
	20%	20%	20%	20%

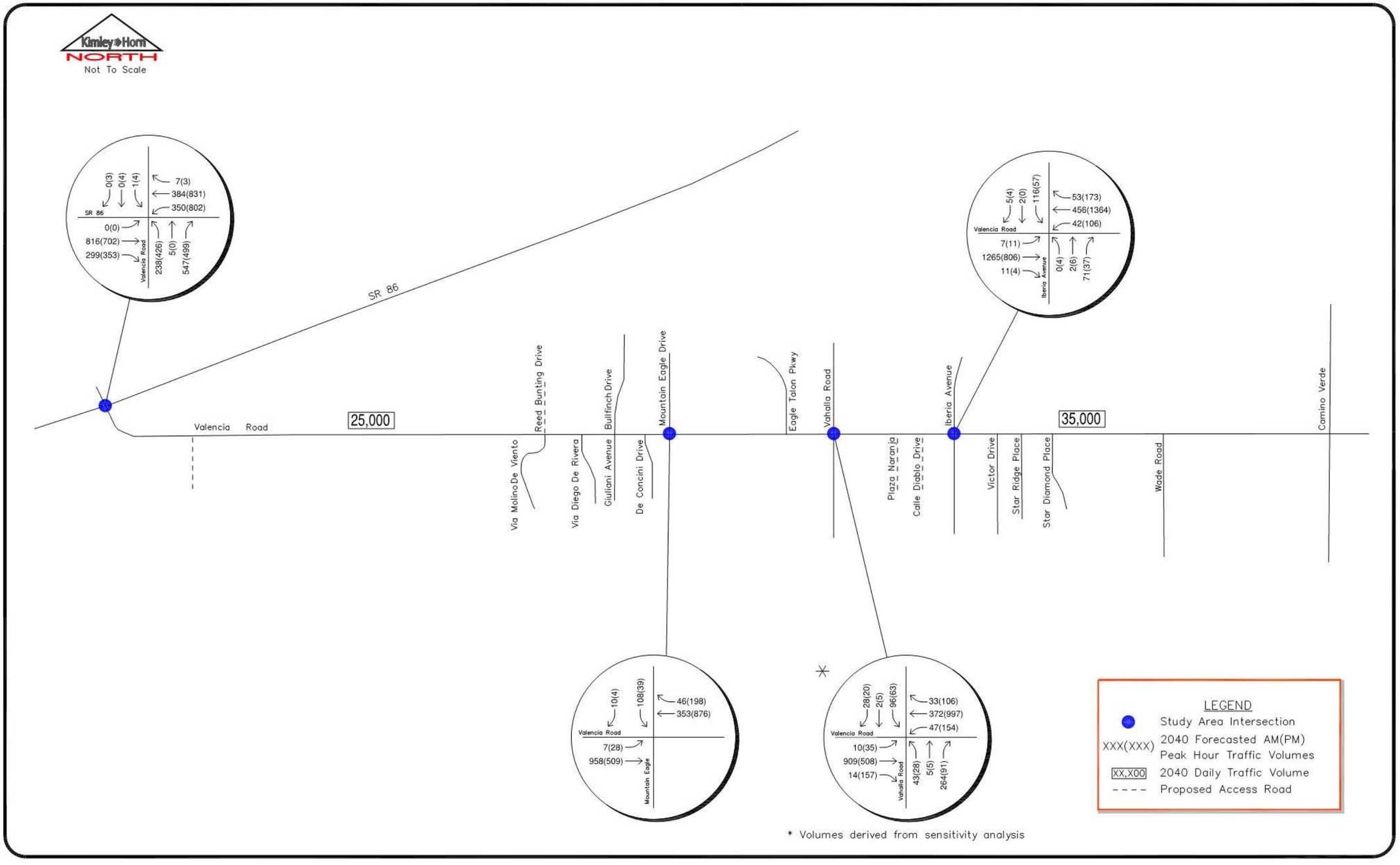

Figure 4 – 2040 Forecasted Traffic Volumes at Key Intersections

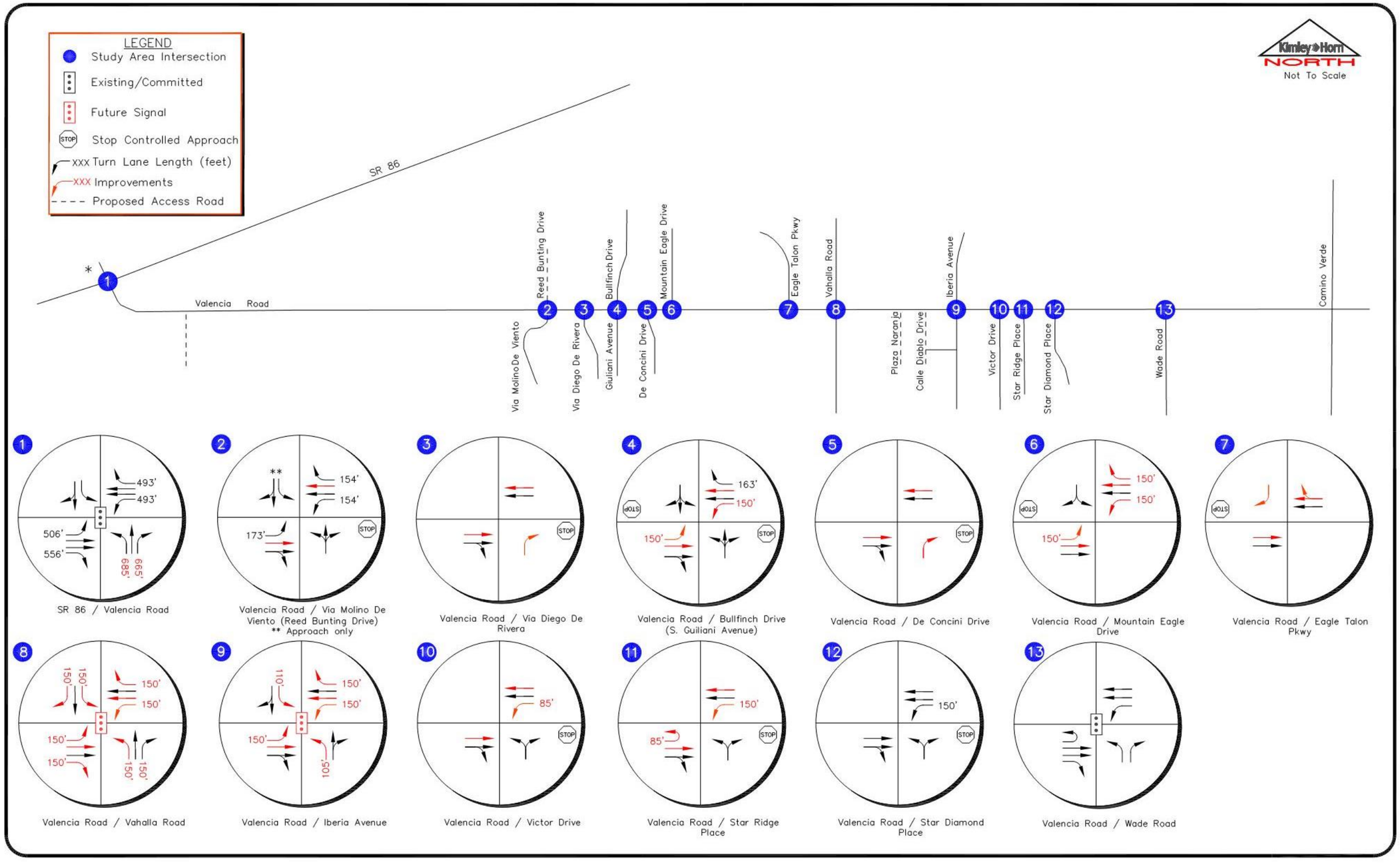

Figure 5 - Proposed Intersection Configurations

APPENDIX A – DAILY TRAFFIC COUNTS / VEHICLE CLASSIFICATION

Field Data Services of Arizona

21636 N. Dietz Dr.
Maricopa, AZ 85138
520.316.6745

Site Code: 16-1122-001
Station ID: Tues 04/06/2016
Valencia Rd. west of Via Molino De Viento 32.133351, -111.151065
Latitude: 0' 0.000 Undefined

Eastbound

Start Time	Bikes	Cars & Tlrs	2 Axle Long	Buses	2 Axle 6 Tire	3 Axle Single	4 Axle Single	<5 Axle Double	5 Axle Double	>6 Axle Double	<6 Axle Multi	6 Axle Multi	>6 Axle Multi	Total
4/5/16	0	8	2	0	0	0	0	0	0	0	0	0	0	10
01:00	0	5	0	0	0	0	0	0	0	0	0	0	0	5
02:00	0	0	0	0	0	0	0	0	0	0	0	0	0	0
03:00	0	5	3	0	0	0	0	0	0	0	0	0	0	8
04:00	0	10	6	0	3	0	0	0	0	0	0	0	0	19
05:00	0	22	12	0	5	0	0	1	0	0	0	0	0	40
06:00	0	44	8	0	1	0	0	0	0	0	0	0	0	53
07:00	0	49	16	**2**	5	0	0	0	0	0	0	0	0	72
08:00	0	**63**	14	0	5	0	0	**2**	0	0	0	0	0	84
09:00	0	51	**21**	0	3	0	0	0	**1**	0	0	0	0	76
10:00	0	45	21	0	**7**	0	**1**	0	0	0	0	0	0	74
11:00	0	56	21	1	7	0	0	0	0	0	0	0	0	**85**
12 PM	0	48	22	0	4	0	0	**2**	0	0	0	0	0	76
13:00	0	42	18	0	6	**1**	0	0	0	0	0	0	0	67
14:00	0	49	15	0	5	0	0	1	0	0	0	0	0	70
15:00	0	60	17	0	6	0	0	0	0	0	0	0	0	83
16:00	0	**96**	23	**2**	**7**	0	0	0	0	0	0	0	0	128
17:00	0	95	**36**	2	4	0	0	0	0	0	0	0	0	**137**
18:00	**1**	72	18	0	5	0	0	0	0	0	0	0	0	96
19:00	0	46	15	0	3	0	0	0	0	0	0	0	0	64
20:00	0	33	5	0	2	0	0	0	0	0	0	0	0	40
21:00	0	30	3	0	1	0	0	0	0	0	0	0	0	34
22:00	0	23	10	0	1	0	0	0	0	0	0	0	0	34
23:00	1	10	1	0	1	0	0	0	0	0	0	0	0	13
Day Total	2	962	307	7	81	1	1	6	1	0	0	0	0	1368
Percent	0.1%	70.3%	22.4%	0.5%	5.9%	0.1%	0.1%	0.4%	0.1%	0.0%	0.0%	0.0%	0.0%	
AM Peak		08:00	09:00	07:00	10:00		10:00	08:00	09:00					11:00
Vol.		63	21	2	7		1	2	1					85
PM Peak	18:00	16:00	17:00	16:00	16:00	13:00		12:00						17:00
Vol.	1	96	36	2	7	1		2						137
Grand Total	2	962	307	7	81	1	1	6	1	0	0	0	0	1368
Percent	0.1%	70.3%	22.4%	0.5%	5.9%	0.1%	0.1%	0.4%	0.1%	0.0%	0.0%	0.0%	0.0%	

Field Data Services of Arizona

21636 N. Dietz Dr.
Maricopa, AZ 85138
520.316.6745

Site Code: 16-1122-001
Station ID: Tues 04/06/2016
Valencia Rd. west of Via Molino De Viento 32.133351, -111.151065
Latitude: 0' 0.000 Undefined

Westbound

Start Time	Bikes	Cars & Tlrs	2 Axle Long	Buses	2 Axle 6 Tire	3 Axle Single	4 Axle Single	<5 Axle Double	5 Axle Double	>6 Axle Double	<6 Axle Multi	6 Axle Multi	>6 Axle Multi	Total
4/5/16	0	11	1	0	1	0	0	0	0	0	0	0	0	13
01:00	0	7	0	0	2	0	0	0	0	0	0	0	0	9
02:00	0	2	2	0	0	0	0	0	0	0	0	0	0	4
03:00	0	1	2	0	0	0	0	0	0	0	0	0	0	3
04:00	0	15	1	0	5	0	0	0	0	0	0	0	0	21
05:00	0	25	10	0	13	0	0	0	0	0	0	0	0	48
06:00	**1**	62	22	0	16	0	0	**2**	0	0	0	0	0	103
07:00	0	**68**	**25**	**1**	**19**	0	0	0	0	0	0	0	0	**113**
08:00	0	44	15	1	18	0	0	0	0	0	0	0	0	78
09:00	0	39	11	0	10	**1**	0	1	0	0	0	0	0	62
10:00	1	35	17	0	14	0	0	0	0	0	0	0	0	67
11:00	0	37	12	0	12	0	0	1	0	0	0	0	0	62
12 PM	0	58	16	0	10	0	0	0	0	0	0	0	0	84
13:00	0	53	19	0	19	0	0	0	0	0	0	0	0	91
14:00	0	47	24	0	21	0	0	0	0	0	0	0	0	92
15:00	1	51	23	0	23	**1**	0	0	**1**	0	0	0	0	100
16:00	**4**	58	22	0	21	1	0	0	0	0	0	0	0	106
17:00	0	**70**	**26**	**1**	**36**	0	0	0	0	0	0	0	0	**133**
18:00	0	59	24	0	16	0	0	0	0	0	0	0	0	99
19:00	0	46	19	0	6	0	0	0	0	0	0	0	0	71
20:00	0	35	9	0	13	0	0	0	0	0	0	0	0	57
21:00	0	29	6	0	8	0	0	0	0	0	0	0	0	43
22:00	0	26	5	0	8	0	0	0	0	0	0	0	0	39
23:00	0	26	4	0	3	0	0	0	0	0	0	0	0	33
Day Total	7	904	315	3	294	3	0	4	1	0	0	0	0	1531
Percent	0.5%	59.0%	20.6%	0.2%	19.2%	0.2%	0.0%	0.3%	0.1%	0.0%	0.0%	0.0%	0.0%	
AM Peak	06:00	07:00	07:00	07:00	07:00	09:00		06:00						07:00
Vol.	1	68	25	1	19	1		2						113
PM Peak	16:00	17:00	17:00	17:00	17:00	15:00			15:00					17:00
Vol.	4	70	26	1	36	1			1					133
Grand Total	7	904	315	3	294	3	0	4	1	0	0	0	0	1531
Percent	0.5%	59.0%	20.6%	0.2%	19.2%	0.2%	0.0%	0.3%	0.1%	0.0%	0.0%	0.0%	0.0%	

Field Data Services of Arizona

21636 N. Dietz Dr.
Maricopa, AZ 85138
520.316.6745

Site Code: 16-1122-001
Station ID: Tues 04/06/2016
Valencia Rd. west of Via Molino De Viento 32.133351, -111.151065
Latitude: 0' 0.000 Undefined

Eastbound, Westbound

Start Time	Bikes	Cars & Tlrs	2 Axle Long	Buses	2 Axle 6 Tire	3 Axle Single	4 Axle Single	<5 Axle Double	5 Axle Double	>6 Axle Double	<6 Axle Multi	6 Axle Multi	>6 Axle Multi	Total
4/5/16	0	19	3	0	1	0	0	0	0	0	0	0	0	23
01:00	0	12	0	0	2	0	0	0	0	0	0	0	0	14
02:00	0	2	2	0	0	0	0	0	0	0	0	0	0	4
03:00	0	6	5	0	0	0	0	0	0	0	0	0	0	11
04:00	0	25	7	0	8	0	0	0	0	0	0	0	0	40
05:00	0	47	22	0	18	0	0	1	0	0	0	0	0	88
06:00	**1**	106	30	0	17	0	0	**2**	0	0	0	0	0	156
07:00	0	**117**	**41**	**3**	**24**	0	0	0	0	0	0	0	0	**185**
08:00	0	107	29	1	23	0	0	2	0	0	0	0	0	162
09:00	0	90	32	0	13	**1**	0	1	**1**	0	0	0	0	138
10:00	1	80	38	0	21	0	**1**	0	0	0	0	0	0	141
11:00	0	93	33	1	19	0	0	1	0	0	0	0	0	147
12 PM	0	106	38	0	14	0	0	**2**	0	0	0	0	0	160
13:00	0	95	37	0	25	**1**	0	0	0	0	0	0	0	158
14:00	0	96	39	0	26	0	0	1	0	0	0	0	0	162
15:00	1	111	40	0	29	1	0	0	**1**	0	0	0	0	183
16:00	**4**	154	45	2	28	1	0	0	0	0	0	0	0	234
17:00	0	**165**	**62**	**3**	**40**	0	0	0	0	0	0	0	0	**270**
18:00	1	131	42	0	21	0	0	0	0	0	0	0	0	195
19:00	0	92	34	0	9	0	0	0	0	0	0	0	0	135
20:00	0	68	14	0	15	0	0	0	0	0	0	0	0	97
21:00	0	59	9	0	9	0	0	0	0	0	0	0	0	77
22:00	0	49	15	0	9	0	0	0	0	0	0	0	0	73
23:00	1	36	5	0	4	0	0	0	0	0	0	0	0	46
Day Total	9	1866	622	10	375	4	1	10	2	0	0	0	0	2899
Percent	0.3%	64.4%	21.5%	0.3%	12.9%	0.1%	0.0%	0.3%	0.1%	0.0%	0.0%	0.0%	0.0%	
AM Peak	06:00	07:00	07:00	07:00	07:00	09:00	10:00	06:00	09:00					07:00
Vol.	1	117	41	3	24	1	1	2	1					185
PM Peak	16:00	17:00	17:00	17:00	17:00	13:00		12:00	15:00					17:00
Vol.	4	165	62	3	40	1		2	1					270
Grand Total	9	1866	622	10	375	4	1	10	2	0	0	0	0	2899
Percent	0.3%	64.4%	21.5%	0.3%	12.9%	0.1%	0.0%	0.3%	0.1%	0.0%	0.0%	0.0%	0.0%	

Field Data Services of Arizona

21636 N. Dietz Dr.
Maricopa, AZ 85138
520.316.6745

Site Code: 16-1122-002
Station ID: Tues 04/05/2016
Valencia Rd. btwn. Star Diamond Pl. &
Wade Rd. 32.133321, -111.118883
Latitude: 0' 0.000 Undefined

Eastbound

Start Time	Bikes	Cars & Tlrs	2 Axle Long	Buses	2 Axle 6 Tire	3 Axle Single	4 Axle Single	<5 Axle Double	5 Axle Double	>6 Axle Double	<6 Axle Multi	6 Axle Multi	>6 Axle Multi	Total
4/5/16	0	15	1	0	0	1	0	0	0	0	0	0	0	17
01:00	0	15	2	0	0	0	0	0	0	0	0	0	0	17
02:00	0	13	1	0	0	0	0	0	0	0	0	0	0	14
03:00	0	25	10	0	1	0	0	0	0	0	0	0	0	36
04:00	0	78	22	0	7	0	0	1	0	0	0	0	0	108
05:00	0	162	66	0	13	1	0	0	0	0	0	0	0	242
06:00	0	334	71	8	13	1	0	1	0	0	0	0	0	428
07:00	**1**	**475**	**80**	4	**21**	0	**1**	1	0	0	**2**	0	0	**585**
08:00	0	281	58	**9**	19	**4**	0	**3**	0	0	0	0	0	374
09:00	0	193	51	0	17	0	1	1	0	0	0	0	0	263
10:00	0	169	48	1	12	2	0	2	0	0	1	0	0	235
11:00	0	184	54	2	11	3	0	0	0	0	0	0	0	254
12 PM	0	159	47	0	12	1	0	**2**	0	0	**1**	0	0	222
13:00	0	160	48	0	10	**2**	0	0	0	0	0	0	0	220
14:00	0	158	41	2	12	0	**1**	1	0	0	0	0	0	215
15:00	0	**202**	50	0	**15**	0	0	0	0	0	0	0	0	267
16:00	0	200	39	**13**	10	0	1	0	0	0	0	0	0	263
17:00	0	194	**62**	5	9	0	0	1	0	0	0	0	0	**271**
18:00	0	181	46	2	5	1	0	0	0	0	1	0	0	236
19:00	**1**	126	29	2	5	0	0	0	0	0	0	0	0	163
20:00	0	83	16	0	2	0	0	0	0	0	0	0	0	101
21:00	0	85	6	0	4	0	0	0	0	0	0	0	0	95
22:00	0	44	13	0	2	0	0	0	0	0	0	0	0	59
23:00	0	20	1	0	0	0	0	0	0	0	0	0	0	21
Day Total	2	3556	862	48	200	16	4	13	0	0	5	0	0	4706
Percent	0.0%	75.6%	18.3%	1.0%	4.2%	0.3%	0.1%	0.3%	0.0%	0.0%	0.1%	0.0%	0.0%	
AM Peak	07:00	07:00	07:00	08:00	07:00	08:00	07:00	08:00			07:00			07:00
Vol.	1	475	80	9	21	4	1	3			2			585
PM Peak	19:00	15:00	17:00	16:00	15:00	13:00	14:00	12:00			12:00			17:00
Vol.	1	202	62	13	15	2	1	2			1			271
Grand Total	2	3556	862	48	200	16	4	13	0	0	5	0	0	4706
Percent	0.0%	75.6%	18.3%	1.0%	4.2%	0.3%	0.1%	0.3%	0.0%	0.0%	0.1%	0.0%	0.0%	

Field Data Services of Arizona

21636 N. Dietz Dr.
Maricopa, AZ 85138
520.316.6745

Site Code: 16-1122-002
Station ID: Tues 04/05/2016
Valencia Rd. btwn. Star Diamond Pl. &
Wade Rd. 32.133321, -111.118883
Latitude: 0' 0.000 Undefined

Westbound

Start Time	Bikes	Cars & Tlrs	2 Axle Long	Buses	2 Axle 6 Tire	3 Axle Single	4 Axle Single	<5 Axle Double	5 Axle Double	>6 Axle Double	<6 Axle Multi	6 Axle Multi	>6 Axle Multi	Total
4/5/16	0	40	7	0	5	0	0	0	0	0	0	0	0	52
01:00	0	24	5	0	3	0	0	0	0	0	0	0	0	32
02:00	0	8	0	0	1	0	0	0	0	0	0	0	0	9
03:00	0	9	2	0	1	0	0	0	0	0	0	0	0	12
04:00	0	21	2	0	2	0	0	0	0	0	0	0	0	25
05:00	0	26	14	2	10	1	0	0	0	**1**	0	0	0	54
06:00	**1**	74	19	**8**	28	1	0	0	**1**	0	0	0	0	132
07:00	1	96	47	8	37	**2**	0	0	0	0	0	**1**	0	192
08:00	0	108	30	5	34	0	**1**	0	1	0	0	0	0	179
09:00	0	**115**	37	3	36	1	0	**1**	0	1	0	0	0	**194**
10:00	0	94	38	0	**42**	1	0	1	0	0	0	0	0	176
11:00	0	96	**53**	1	29	1	0	1	0	0	0	0	0	181
12 PM	0	146	51	1	38	1	0	0	0	0	0	0	0	237
13:00	0	147	45	0	50	0	**1**	1	0	**1**	0	0	0	245
14:00	1	155	66	2	48	0	0	1	0	1	0	0	0	274
15:00	**4**	232	68	4	82	2	0	**2**	**1**	0	0	0	0	395
16:00	2	267	96	**11**	78	0	0	1	0	0	0	0	0	455
17:00	2	**315**	**103**	4	**101**	**3**	0	1	0	1	**1**	0	0	**531**
18:00	0	292	94	0	62	0	0	1	0	0	0	0	0	449
19:00	2	262	78	2	61	1	0	0	0	0	1	0	0	407
20:00	1	205	47	0	50	0	0	1	0	0	0	0	0	304
21:00	1	157	41	0	26	0	0	0	0	0	0	0	0	225
22:00	0	108	19	0	17	0	0	0	0	0	0	0	0	144
23:00	0	75	9	0	6	0	0	0	0	0	0	0	0	90
Day Total	15	3072	971	51	847	14	2	11	3	5	2	1	0	4994
Percent	0.3%	61.5%	19.4%	1.0%	17.0%	0.3%	0.0%	0.2%	0.1%	0.1%	0.0%	0.0%	0.0%	
AM Peak	06:00	09:00	11:00	06:00	10:00	07:00	08:00	09:00	06:00	05:00		07:00		09:00
Vol.	1	115	53	8	42	2	1	1	1	1		1		194
PM Peak	15:00	17:00	17:00	16:00	17:00	17:00	13:00	15:00	15:00	13:00	17:00			17:00
Vol.	4	315	103	11	101	3	1	2	1	1	1			531
Grand Total	15	3072	971	51	847	14	2	11	3	5	2	1	0	4994
Percent	0.3%	61.5%	19.4%	1.0%	17.0%	0.3%	0.0%	0.2%	0.1%	0.1%	0.0%	0.0%	0.0%	

Field Data Services of Arizona

21636 N. Dietz Dr.
Maricopa, AZ 85138
520.316.6745

Site Code: 16-1122-002
Station ID: Tues 04/05/2016
Valencia Rd. btwn. Star Diamond Pl. &
Wade Rd. 32.133321, -111.118883
Latitude: 0' 0.000 Undefined

Eastbound, Westbound

Start Time	Bikes	Cars & Tlrs	2 Axle Long	Buses	2 Axle 6 Tire	3 Axle Single	4 Axle Single	<5 Axle Double	5 Axle Double	>6 Axle Double	<6 Axle Multi	6 Axle Multi	>6 Axle Multi	Total
4/5/16	0	55	8	0	5	1	0	0	0	0	0	0	0	69
01:00	0	39	7	0	3	0	0	0	0	0	0	0	0	49
02:00	0	21	1	0	1	0	0	0	0	0	0	0	0	23
03:00	0	34	12	0	2	0	0	0	0	0	0	0	0	48
04:00	0	99	24	0	9	0	0	1	0	0	0	0	0	133
05:00	0	188	80	2	23	2	0	0	0	**1**	0	0	0	296
06:00	1	408	90	**16**	41	2	0	1	**1**	0	0	0	0	560
07:00	**2**	**571**	**127**	12	**58**	2	**1**	1	0	0	**2**	**1**	0	**777**
08:00	0	389	88	14	53	**4**	1	**3**	1	0	0	0	0	553
09:00	0	308	88	3	53	1	1	2	0	1	0	0	0	457
10:00	0	263	86	1	54	3	0	3	0	0	1	0	0	411
11:00	0	280	107	3	40	4	0	1	0	0	0	0	0	435
12 PM	0	305	98	1	50	2	0	**2**	0	0	**1**	0	0	459
13:00	0	307	93	0	60	2	**1**	1	0	**1**	0	0	0	465
14:00	1	313	107	4	60	0	1	2	0	1	0	0	0	489
15:00	**4**	434	118	4	97	2	0	2	**1**	0	0	0	0	662
16:00	2	467	135	**24**	88	0	1	1	0	0	0	0	0	718
17:00	2	**509**	**165**	9	**110**	**3**	0	2	0	1	1	0	0	**802**
18:00	0	473	140	2	67	1	0	1	0	0	1	0	0	685
19:00	3	388	107	4	66	1	0	0	0	0	1	0	0	570
20:00	1	288	63	0	52	0	0	1	0	0	0	0	0	405
21:00	1	242	47	0	30	0	0	0	0	0	0	0	0	320
22:00	0	152	32	0	19	0	0	0	0	0	0	0	0	203
23:00	0	95	10	0	6	0	0	0	0	0	0	0	0	111
Day Total	17	6628	1833	99	1047	30	6	24	3	5	7	1	0	9700
Percent	0.2%	68.3%	18.9%	1.0%	10.8%	0.3%	0.1%	0.2%	0.0%	0.1%	0.1%	0.0%	0.0%	
AM Peak	07:00	07:00	07:00	06:00	07:00	08:00	07:00	08:00	06:00	05:00	07:00	07:00		07:00
Vol.	2	571	127	16	58	4	1	3	1	1	2	1		777
PM Peak	15:00	17:00	17:00	16:00	17:00	17:00	13:00	12:00	15:00	13:00	12:00			17:00
Vol.	4	509	165	24	110	3	1	2	1	1	1			802
Grand Total	17	6628	1833	99	1047	30	6	24	3	5	7	1	0	9700
Percent	0.2%	68.3%	18.9%	1.0%	10.8%	0.3%	0.1%	0.2%	0.0%	0.1%	0.1%	0.0%	0.0%	

APPENDIX B – TURNING MOVEMENT VOLUMES

Intersection Turning Movement
Prepared by:

FIELD DATA SERVICES OF ARIZONA, INC.
520.316.6745

Project #: 16-1122-001

TMC SUMMARY OF Wade Rd. & Valencia Rd.

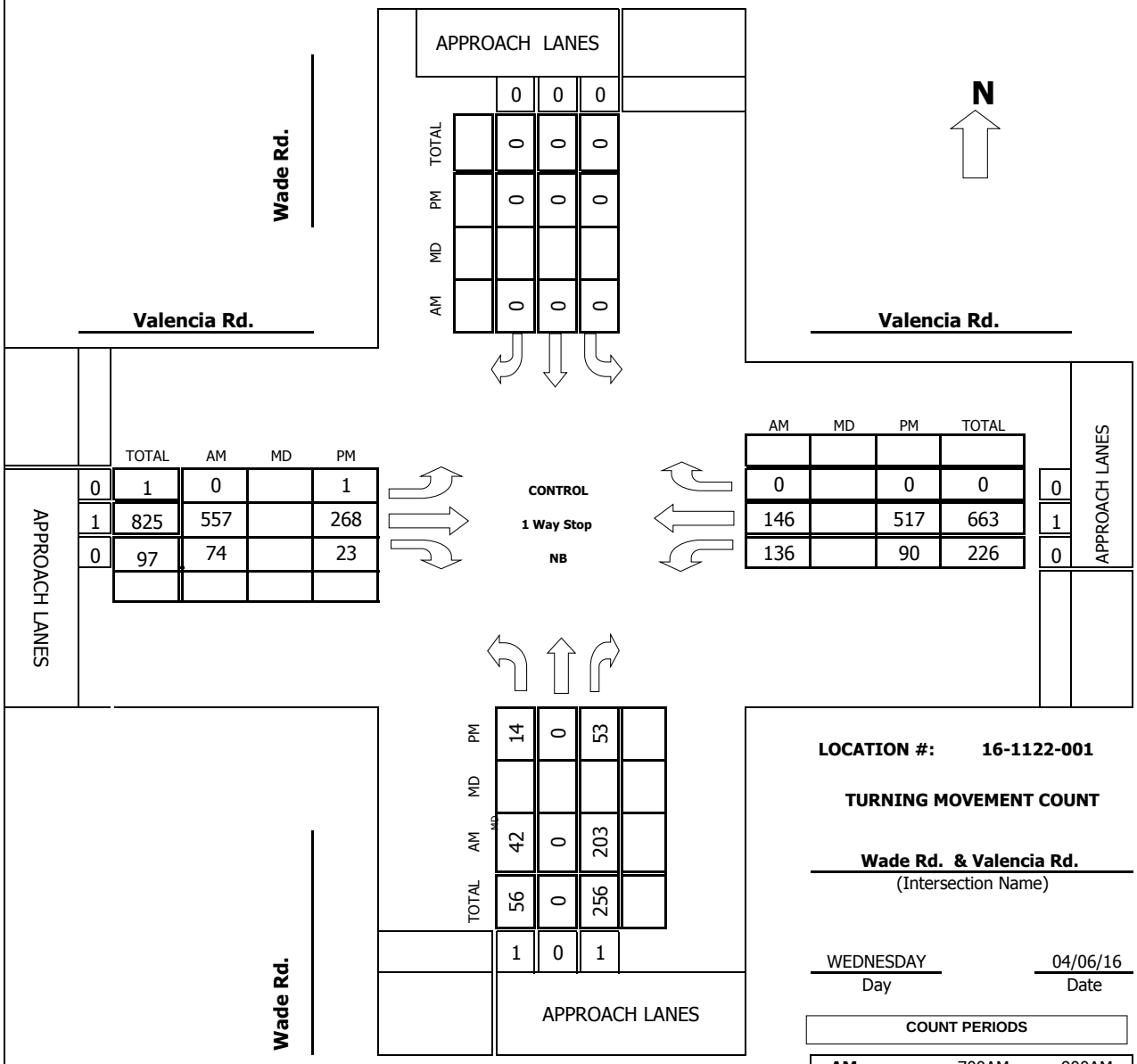

LOCATION #: 16-1122-001

TURNING MOVEMENT COUNT

Wade Rd. & Valencia Rd.
(Intersection Name)

WEDNESDAY — Day
04/06/16 — Date

COUNT PERIODS

AM	700AM	-	900AM
NOON		-	
PM	400PM	-	600PM

AM PEAK HOUR: 700 AM

NOON PEAK HOUR:

PM PEAK HOUR: 500 PM

APPENDIX C – CRASH DATA

PIMA COUNTY
TRANSPORTATION
TRAFFIC ENGINEERING DIVISION

VALENCIA RD@VICTOR DR
8/1/2011 to 8/31/2015

LEGEND

- REAR END
- TURNING
- ANGLE
- OUT OF CONTROL
- MISC
- FIXED OBJ
- BACKING
- HEAD ON
- BODILY INJURY
- FATALITY

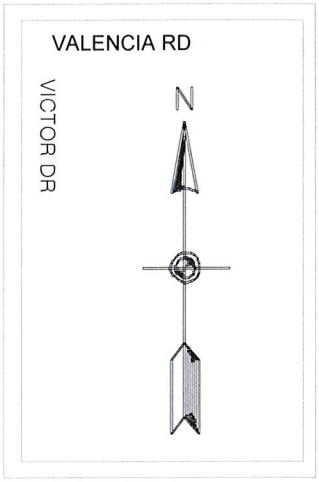

2

Print Date: 2/17/2016

CRASH AND INJURY SEVERITY SUMMARY

PROPERTY	1
INJURY	0
FATALITY	0
TOTAL	1

PIMA COUNTY
TRANSPORTATION
TRAFFIC ENGINEERING DIVISION

VALENCIA RD @ VICTOR DR

8/1/2011 to 8/31/2015

TYPE	DATE CASE #	TIME LIGHT	DAY	SEVERITY BLOCK #	DISTRACTED DRIVING	VIOLATIONS CITED	NARRATIVE
2	3/7/2014 140307278	17 : 13 Day	Fri	PROPERTY 7400 W	DR 1: UNKNOWN DISTRACTIONS	VEH 1: SPEED TOO FAST FOR CONDITIONS VEH 2: NONE	EB REAR-END

Date Printed 2/17/2016

** Denotes Driver Impairment

PIMA COUNTY
TRANSPORTATION
TRAFFIC ENGINEERING DIVISION

IBERIA AV@VALENCIA RD
8/1/2011 to 8/31/2015

LEGEND

- REAR END
- TURNING
- ANGLE
- OUT OF CONTROL
- MISC
- FIXED OBJ
- BACKING
- HEAD ON
- BODILY INJURY
- FATALITY

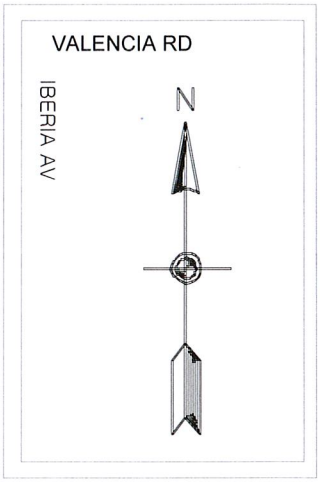

CRASH AND INJURY SEVERITY SUMMARY

PROPERTY	3
INJURY	1
FATALITY	0
TOTAL	4

Print Date: 2/17/2016

PIMA COUNTY
TRANSPORTATION
TRAFFIC ENGINEERING DIVISION

IBERIA AV @ VALENCIA RD

8/1/2011 to 8/31/2015

TYPE	DATE CASE #	TIME LIGHT	DAY	SEVERITY BLOCK #	DISTRACTED DRIVING	VIOLATIONS CITED	NARRATIVE
31	1/29/2014 140129189	15:59 Day	Wed	INJURY - 3 7510 W		VEH 1: PASSED IN NO PASSING ZONE OTHER VEH 2: NONE	EB HIT WBLT HEAD-ON, LEFT RDWY & HIT BRICK WALL.
12	3/14/2013 130314362	19:45 Dark	Thu	PROPERTY 7500 W		VEH 1: SPEED TOO FAST FOR CONDITIONS FOLLOWED TOO CLOSELY VEH 2: NONE	WB REAR-ENDED A WB RT
15	2/5/2012 120205239	18:16 Dusk	Sun	PROPERTY 7500 W		VEH 1: MADE IMPROPER TURN VEH 2: OTHER UNSAFE PASSING	WB PASSING ON THE LEFT HIT A WB LT
11	11/16/2011 111116305	19:51 Dark	Wed	PROPERTY 7500 W		VEH 1: NONE VEH 2: OTHER	WB LT HIT AN EB

Date Printed 2/17/2016

** Denotes Driver Impairment

PIMA COUNTY
TRANSPORTATION
TRAFFIC ENGINEERING DIVISION

VAHALLA RD@VALENCIA RD
8/1/2011 to 8/31/2015

LEGEND

- REAR END
- TURNING
- ANGLE
- OUT OF CONTROL
- MISC
- FIXED OBJ
- BACKING
- HEAD ON
- BODILY INJURY
- FATALITY

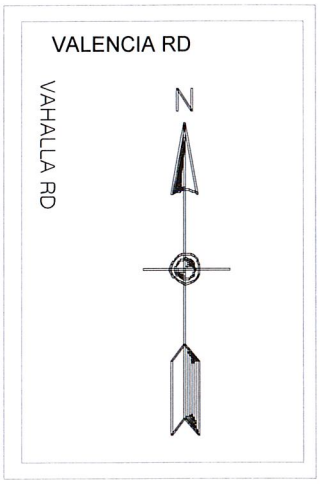

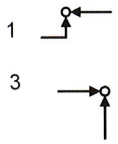

Print Date: 2/17/2016

CRASH AND INJURY SEVERITY SUMMARY

PROPERTY	0
INJURY	2
FATALITY	0
TOTAL	2

PIMA COUNTY
TRANSPORTATION
TRAFFIC ENGINEERING DIVISION

VAHALLA RD @ VALENCIA RD

8/1/2011 to 8/31/2015

TYPE	DATE CASE #	TIME LIGHT	DAY	SEVERITY BLOCK #	DISTRACTED DRIVING	VIOLATIONS CITED	NARRATIVE
3	1/17/2015 150117243	20:27 Dark	Sat	INJURY - 4 6500 S	DR 1: UNKNOWN DISTRACTIONS	VEH 1: RAN STOP SIGN VEH 2: NONE	NB RAN STOP SIGN & HIT EB (DELAYED FATAL)
1	8/11/2014 140811262	20:45 Dark	Mon	INJURY - 3 7800 W		VEH 1: UNKNOWN VEH 2: UNKNOWN	EB MOTORCYCLE TURNING LEFT HIT A WB HEAD-ON

Date Printed 2/17/2016

** Denotes Driver Impairment

PIMA COUNTY
TRANSPORTATION
TRAFFIC ENGINEERING DIVISION

MOUNTAIN EAGLE DR@VALENCIA RD
8/1/2011 to 8/31/2015

LEGEND

- REAR END
- TURNING
- ANGLE
- OUT OF CONTROL
- MISC
- FIXED OBJ
- BACKING
- HEAD ON
- BODILY INJURY
- FATALITY

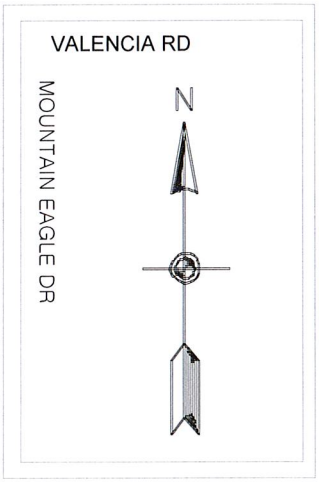

17

CRASH AND INJURY SEVERITY SUMMARY

PROPERTY	1
INJURY	0
FATALITY	0
TOTAL	1

Print Date: 2/17/2016

PIMA COUNTY
TRANSPORTATION
TRAFFIC ENGINEERING DIVISION

MOUNTAIN EAGLE DR @ VALENCIA RD

8/1/2011 to 8/31/2015

TYPE	DATE CASE #	TIME LIGHT	DAY	SEVERITY BLOCK #	DISTRACTED DRIVING	VIOLATIONS CITED	NARRATIVE
17	3/27/2012 120327083	10 : 12 Dawn	Tue	PROPERTY 6500 S		VEH 1: NONE VEH 2: DISREGARD TRAFFIC SIGNAL	SB RE SB

Date Printed 2/17/2016

** Denotes Driver Impairment

PIMA COUNTY
TRANSPORTATION
TRAFFIC ENGINEERING DIVISION

DE CONCINI DR@VALENCIA RD
8/1/2011 to 8/31/2015

LEGEND

- REAR END
- TURNING
- ANGLE
- OUT OF CONTROL
- MISC
- FIXED OBJ
- BACKING
- HEAD ON
- BODILY INJURY
- FATALITY

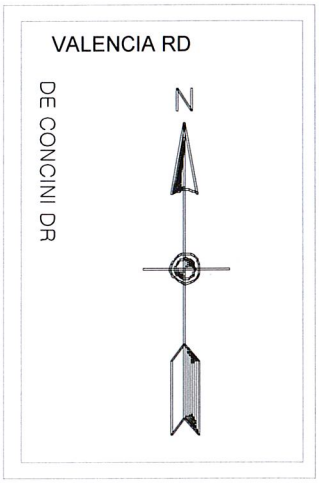

12

CRASH AND INJURY SEVERITY SUMMARY

PROPERTY	0
INJURY	1
FATALITY	0
TOTAL	1

Print Date: 2/17/2016

PIMA COUNTY
TRANSPORTATION
TRAFFIC ENGINEERING DIVISION

DE CONCINI DR @ VALENCIA RD

8/1/2011 to 8/31/2015

TYPE	DATE CASE #	TIME LIGHT	DAY	SEVERITY BLOCK #	DISTRACTED DRIVING	VIOLATIONS CITED	NARRATIVE
12	3/28/2012 120328181	15 : 5 Day	Wed	INJURY - 2 8200 W	DR 1: UNKNOWN DISTRACTIONS	VEH 1: SPEED TOO FAST FOR CONDITIONS VEH 2: NONE	WB REAR-END

Date Printed 2/17/2016

** Denotes Driver Impairment

PIMA COUNTY
TRANSPORTATION
TRAFFIC ENGINEERING DIVISION

VALENCIA RD FROM 7000W TO 9600W

08/01/11 THROUGH 08/31/15

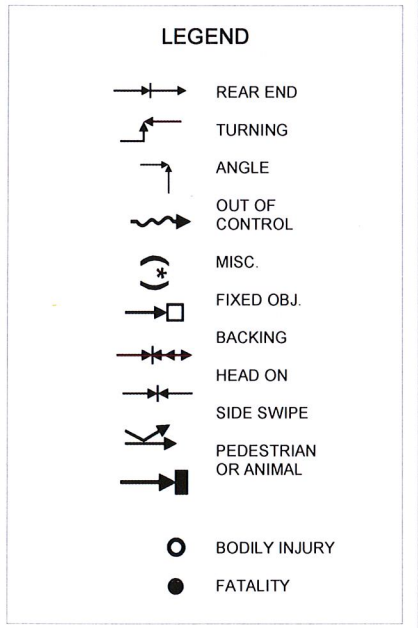

CRASH AND INJURY SEVERITY SUMMARY

PROPERTY	7
INJURY	8
FATALITY	0
TOTAL	15

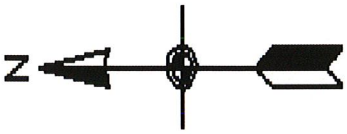

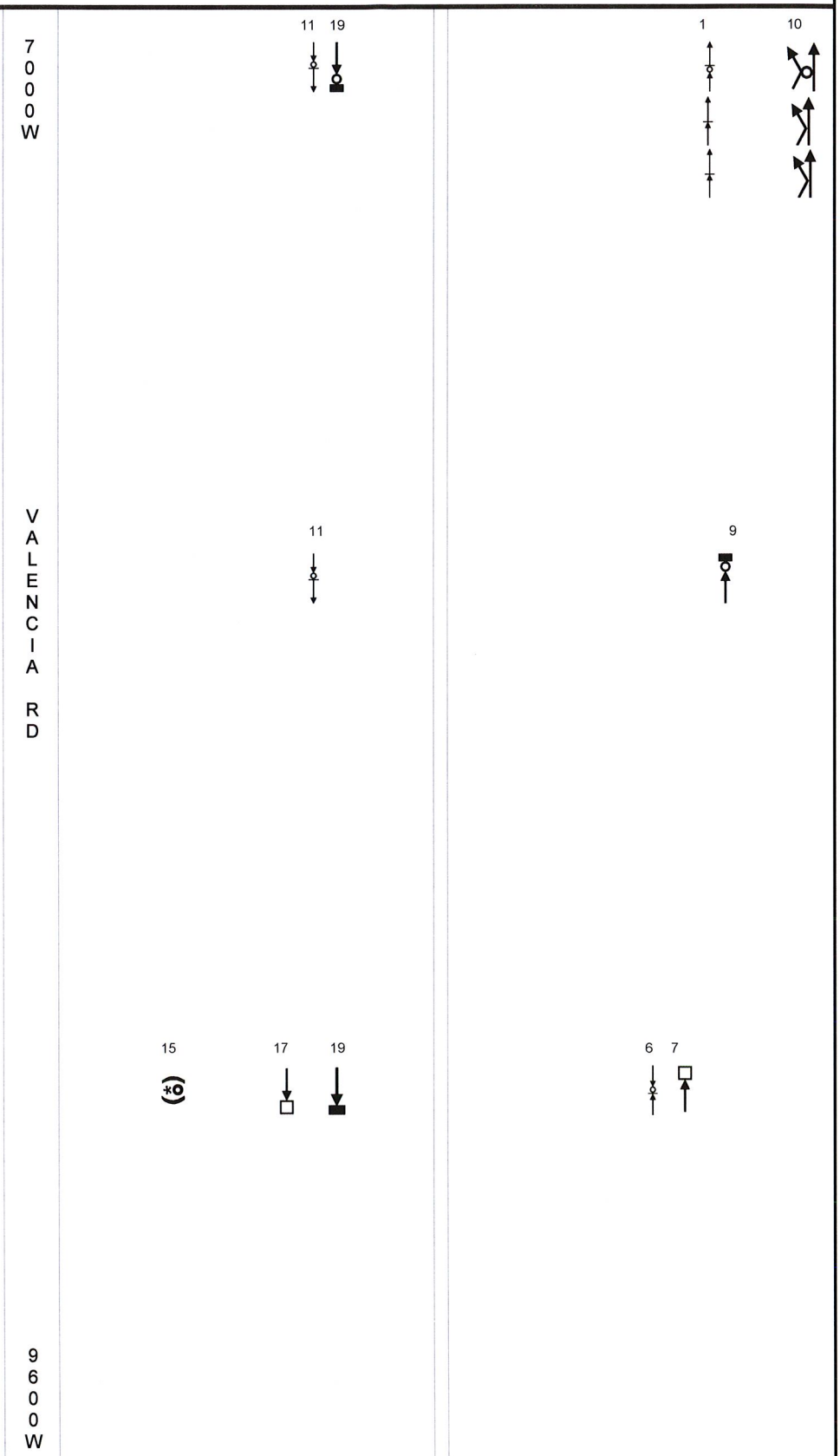

Print Date: 2/17/2016

PIMA COUNTY
TRANSPORTATION
TRAFFIC ENGINEERING DIVISION

VALENCIA RD **: 7000 - 9600 W**

08/01/11 to 08/31/15

TYPE	DATE CASE #	TIME LIGHT	DAY	SEVERITY BLOCK #	DISTRACTED DRIVING	VIOLATIONS CITED	NARRATIVE
9	3/11/2015 150311022	6:53 Dawn	Wed	INJURY - 3 8170	DR 1: UNKNOWN DISTRACTIONS	VEH 1: UNKNOWN VEH 2: NONE	EB VEH HIT EB PEDESTRIAN
11	2/1/2015 150201042	4:30 Dark--lighted	Sun	INJURY - 2 8320	DR 1: UNKNOWN DISTRACTIONS	** VEH 1: SPEED TOO FAST FOR CONDITIONS VEH 2: OTHER	WB CHANGED LANES & RE A WB PARKED VEH. (ALCOHOL)
6	1/1/2015 150101204	13:27 Day	Thu	INJURY - 3 9500	DR 2: UNKNOWN DISTRACTIONS	** VEH 1: NONE VEH 2: DROVE/RODE IN OPPOSING LANE DISREGARDED PAVEMENT MARKINGS	WB HIT EB HEAD ON IN CURVE
19	10/26/2014 141026043	3:32 Dark	Sun	INJURY - 3 7580	DR 1: UNKNOWN DISTRACTIONS DR 2: UNKNOWN DISTRACTIONS	** VEH 1: SPEED TOO FAST FOR CONDITIONS VEH 2: DID NOT USE CROSSWALK	WB HIT A NB PEDESTRIAN (ALCOHOL)
7	2/4/2014 140204301	23:44 Dark	Tue	PROPERTY 9500		** VEH 1: SPEED TOO FAST FOR CONDITIONS	EB NEGO CURVE HIT A TRAFFIC SIGN (FELL ASLEEP)
19	1/2/2014 140102259	22:0 Dark	Thu	PROPERTY 9200		VEH 1: NONE	WB HIT AN ANIMAL IN THE RDWY (DEER)
17	9/13/2013 130913152	13:15 Day	Fri	PROPERTY 9200		VEH 1: OTHER	WB LOST CTRL, LEFT THE RDWY & HIT A FENCE (FAULTY BRAKES)
1	8/27/2013 130827040	07:43 Day	Tue	INJURY - 3 7200		VEH 1: SPEED TOO FAST FOR CONDITIONS VEH 2: NONE VEH 3: NONE VEH 4: NONE	EB REAR-END
10	1/4/2013 130104063	08:0 Day	Fri	PROPERTY 7450		VEH 1: UNKNOWN VEH 2: UNKNOWN	EB PASSING HIT EB
11	10/19/2012 121019063	08:19 Day	Fri	INJURY - 2 7670	DR 1: UNKNOWN DISTRACTIONS	VEH 1: FOLLOWED TOO CLOSELY VEH 2: NONE VEH 3: NONE	WB REAR-END
10	5/21/2012 120521382	21:58 Dark	Mon	PROPERTY 7010		VEH 1: NONE VEH 2: PASSED IN NO PASSING ZONE	WB PASSING SIDESWIPED AN EB
15	3/12/2012 120312171	13:29 Day	Mon	INJURY - 2 9480		VEH 1: SPEED TOO FAST FOR CONDITIONS	WB CROSSED CENTER LANE ROLLED & RAN OFF RD

Date Printed 2/17/2016

** Denotes Driver Impairment

TYPE	DATE CASE #	TIME LIGHT	DAY	SEVERITY BLOCK #	DISTRACTED DRIVING	VIOLATIONS CITED	NARRATIVE
10	11/9/2011 111109032	06 : 42 Day	Wed	INJURY - 3 7390	DR 1: UNKNOWN DISTRACTIONS	VEH 1: OTHER UNSAFE PASSING VEH 2: NONE	EB PASSING SIDESWIPED AN EB BICYCLE
1	10/15/2011 111015213	17 : 7 Day	Sat	PROPERTY 7570		** VEH 1: NONE VEH 2: SPEED TOO FAST FOR CONDITIONS	EB REAR-END (ALCOHOL)
	8/23/2011 110823057	08 : 25 Day	Tue	PROPERTY 7390	DR 1: UNKNOWN DISTRACTIONS	VEH 1: SPEED TOO FAST FOR CONDITIONS VEH 2: NONE	EB REAR-END (STOPPED FOR SCHOOL BUS)

Date Printed 2/17/2016

** Denotes Driver Impairment

APPENDIX D – SUBMITTED NOTE TO FILE

MEMORANDUM

To: Mr. Paul Bennett, PE

From: Rick Solis, PE

Kimley-Horn and Associates, Inc.

Date: 10/11/2016

Subject: 4RTVWE Valencia Road - Wade Rd to Ajo – SR86 Intersection and Valencia ADT Final Traffic Assumptions - **Note to File**

The Sendero Pass Traffic Analysis evaluated the traffic impacts of the proposed development situated on 837 acres of land south of Ryan Airfield. The development would have a significant impact to Valencia Road as the project proposes two access points along Valencia Road;

Exhibit 1. SR86 and Valencia Road Geometry (2030)

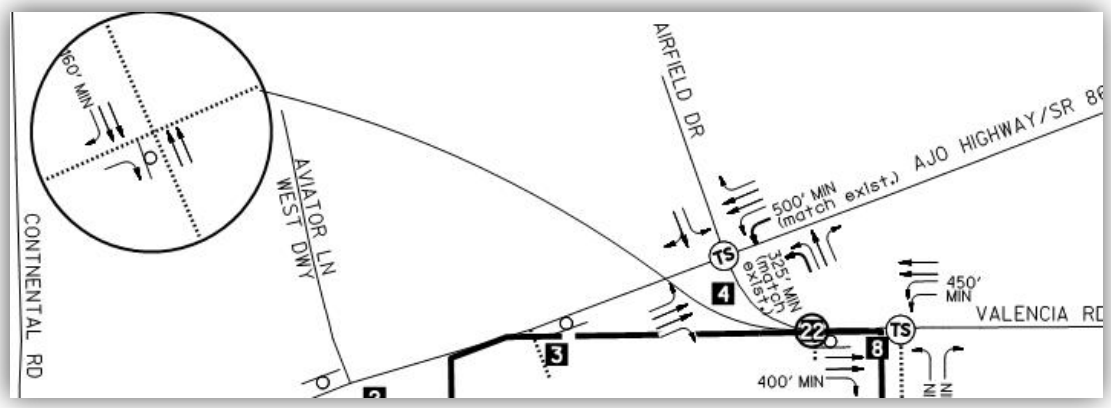

Source: Sendero Pass Traffic Impact Study

Twin Mustang Trail and the driveway to Lots 32,33 (intersection #22 in the TIA) are shown in Exhibit 1 above. The ultimate year 2030 Valencia Road / Twin Mustang Trail intersection recommends dual westbound to southbound left turn lanes (450-ft min), two westbound thru lanes, a dedicated eastbound to southbound right turn lane (400-ft min), and two eastbound thru lanes. In addition, Intersection # 22 shows right-in/ right-out access onto Valencia within the curve. The Sendero Pass traffic study recommends improvements to the newly constructed SR86/Valencia intersection for the

2030 horizon year. The improvements are the addition of a westbound to southbound left-turn lane, resulting in dual Lefts (500-ft min) – No additional improvements to the intersection were shown.

In terms of traffic volumes, there is a large disparity between various traffic forecast sources for the Valencia Road and SR 86 area. These include the Sendero Pass Traffic Impact Analysis with a 2030 horizon year (**Exhibit 2)**, the Pima Association of Governments (PAG) 2040, and PAG 2045 forecasted volumes. **Exhibit 3** (Page 3) illustrates the forecasted volumes for the area. Note that the Sendero Pass study assumes a 2% growth in traffic volumes per year. The design team has agreed that this growth rate is reasonable to capture the potential traffic generated by the Pomegranate Farms development (currently under study) and any other background traffic.

Exhibit 2. Sendero Pass 2030 Turning Movement Volumes

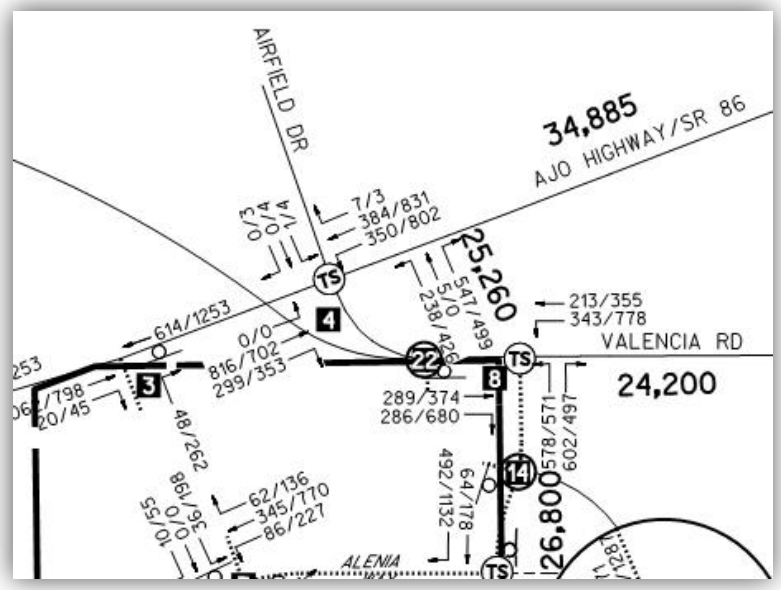

Conclusion

1. **Design Turning Movements for project 4RTVWE (SR 86 / Valencia Road)** - The 2030 forecasted traffic volumes from the Sendero Pass Traffic Impact Analysis (**Exhibit 2**) will be used as the 2040 design turning movement volumes to evaluate queuing for this project 4RTVWE. This is based on the review that the forecasted ADT volumes from the 2045 PAG Travel Demand Model are exceeded by the Sendero Pass study.

2. **Design ADT for Valencia Road** – To aid in the development of design ADT's, a pavement design sensitivity analysis was performed and found that ADTs ranging between 25k -35k ADT had negligible effect on the AC depth but exhibited some impact on the AB thickness. A cost comparison of Alternative AB scenarios was performed (See AB Calculations on page 5).

As such, considering the large disparity between various traffic forecast sources for the Valencia Road corridor, the following design year 2040 ADTs will be used for design:

- **25,000-VPD - SR86 to Via Molino De Viento**
- **35,000-VPD - Via Molino De Viento to Wade Rd**

Justification for these design parameters are as follows:

- **SR86 to Via Molino De Viento –** The 25,000 VPD value is in between the PAG 2045 ADT (18,127 VPD) and PAG 2040 ADT (33,228 VPD) and matches the Sendero Pass 2030 ADT's (25,260 VPD & 24,200 VPD).
- **Via Molino De Viento to Wade Rd –** The highest PAG 2045 (34,442) volume is in range of a 35,000 VPD.
- **Wade Rd to Camino Verde –** For comparison purposes, the 2030 ADT used for the recently constructed Wade to Camino Verde segment was 28,400 VPD. At a growth rate of 3.3%, this would equate to a 39,341 VPD in 2040.

Exhibit 3. – Average Daily Traffic Comparision

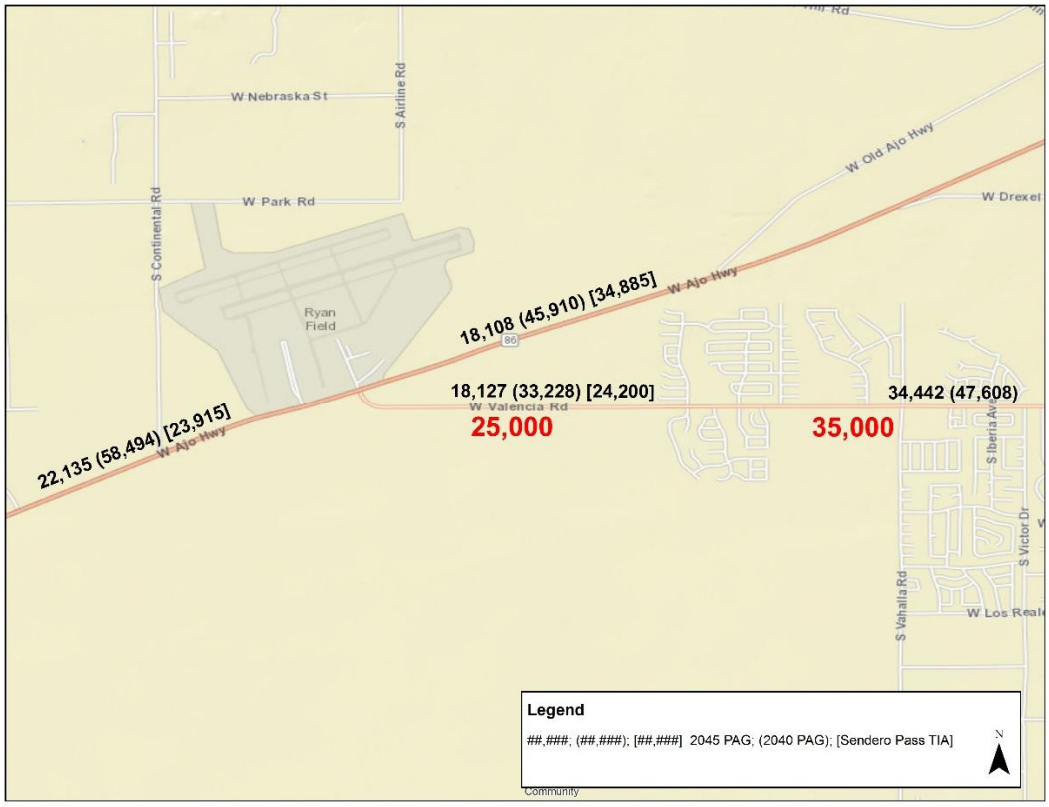

3. **Heavy Vehicle Percentages** - The Valencia Road pavement design will utilize the recorded 2016 heavy vehicle percentages (Table 1 from the project Traffic Memorandum) and the existing year 2016 ADT's; 2,899 VPD - SR86 to Via Molino De Viento and 9,700 VPD - Via Molino De Viento to Wade Rd.

Table 1 - Vehicle Classification Data

Bikes	Cars & Trailers	2 Axle Long	Bus	2 Axle 6-Tire	3 Axle Single	4 Axle Single	<5 Axle Double	5 Axle Double	>6 Axle Double	5 Axle Multi	6 Axle Multi	>6 Axle Multi
Valencia, West of Via Molino De Viento												
9	1866	622	10	375	4	1	10	2	0	0	0	0
0.3%	64.4%	21.5%	0.3%	12.9%	0.1%	0.0%	0.3%	0.1%	0.0%	0.0%	0.0%	0.0%
Valencia Road, Between Star Diamond Place and Wade Road												
17	6628	1833	99	1047	30	6	24	3	5	7	1	0
0.2%	68.3%	18.9%	1.0%	10.8%	0.3%	0.1%	0.2%	0.0%	0.1%	0.1%	0.0%	0.0%

4. **Turn Lane Storage Requirements at Valencia Approach to SR86** - Because the Valencia Road approach is within the vicinity of an ADOT facility, ADOT's Traffic Engineering Guidelines and Processes (Section 400) for Turn Lane Design was used to determine the design storage length. According to the guidelines:

   - Storage length = braking distance + queue length

   The braking distance (Table 430-2 per the ADOT guidelines) is assumed to be based on the speed recommended for the curve approaching SR 86. ADOT's final design plans recommend a Curve Warning Sign and a 30 MPH warning speed plaque be posted.

   - Assuming a 35 MPH curve design speed, the desirable ADOT breaking distance is 115'.
   - Alternatively, the minimum breaking distance for 45 MPH is 85'.
   - The maximum northbound left turn queue lengths occur in the PM (See Synchro reports) and was calculated between 503' (Sim Traffic) and 556'. The maximum NB RT turn queue was 339 in the AM.
   - Therefore, the maximum NB LT Storage Length Need = 115' + 556' = 671'.

   Therefore, the provided storage lengths in the current design of 685' (NB LT) and 665' (NB RT) exceed the storage needs. The traffic analysis assumes that dual WB left-turns along SR86 are in-place in year 2040. See the attached AM/PM traffic outputs.

AB Calculations:

Segment 1, Area: Valencia Road - SR86 to Via Molino De Viento = 47,860 SY
Segment 2, Area: Valencia Road - Via Molino De Viento to Wade Rd = 59,999 SY

Preliminary pavement design results include the following:

Alt 1 - 25,000 ADT, 6 AC / 9 AB on 8-in lime-treated subgrade
Alt 2 - 28,000 ADT, 6 AC / 11 AB on 8-in lime-treated subgrade
Alt 3 - 35,000 ADT, 6 AC / 12 AB on 8-in lime-treated subgrade

Segment 1 & Alt 1 Combination Cost: (47,860 SY) x (9”/12”)’ x (1 Yd / 3’) = 11,965 CY
Segment 1 & Alt 2 Combination Cost: (47,860 SY) x (12”/12”)’ x (1 Yd / 3’) = 14,623 CY

Sub-Total Dollar Difference (Cost Range $28/CY - $45/CY) = ($74,449) to ($119,650)

Segment 2 & Alt 2 Combination Cost: (59,999 SY) x (11”/12”)’ x (1 Yd / 3’) = 18,333 CY
Segment 2 & Alt 3 Combination Cost: (59,999 SY) x (12”/12”)’ x (1 Yd / 3’) = 19,999 CY

Sub-Total Dollar Difference (Cost Range $28/CY - $45/CY) = $46,665 to $74,999

Total Dollar Difference AB Cost [(1)(2)] (Cost Range $28/CY - $45/CY) = (**$27,783) to ($44,651)**

(1) Negative values reflect savings from the assumed pavement section 6” AC / 11” AB used throughout Valencia Road in the Draft DCR’s base cost estimate.
(2) Costs do not include 8-in lime-treated subgrade. Only the variable AB quantity was compared.

APPENDIX E – SYNCHRO OUTPUT SHEETS

Lanes and Geometrics
3: Valencia Road/Ryan Airfield Drive & Ajo Highway

10/11/2016

Lane Group	EBL	EBT	EBR	WBL	WBT	WBR	NBL	NBT	NBR	SBL	SBT	SBR
Lane Configurations												
Ideal Flow (vphpl)	1900	1900	1900	1900	1900	1900	1900	1900	1900	1900	1900	1900
Lane Width (ft)	12	12	12	12	12	12	12	12	12	12	12	12
Grade (%)		0%			0%			0%			0%	
Storage Length (ft)	495		532	493		493	685		666	362		125
Storage Lanes	1		1	2		1	1		1	1		0
Taper Length (ft)	25			25			25			25		
Lane Util. Factor	1.00	0.95	1.00	0.97	0.95	1.00	1.00	1.00	1.00	1.00	1.00	1.00
Ped Bike Factor												
Frt			0.850			0.850			0.850		0.936	
Flt Protected				0.950			0.950			0.950		
Satd. Flow (prot)	1863	3362	1583	3433	3539	1583	1770	1863	1583	1770	1744	0
Flt Permitted				0.950			0.471			0.754		
Satd. Flow (perm)	1863	3362	1583	3433	3539	1583	877	1863	1583	1405	1744	0
Right Turn on Red			Yes			Yes			Yes			Yes
Satd. Flow (RTOR)			325			113			372		3	
Link Speed (mph)		55			55			35			35	
Link Distance (ft)		731			847			966			535	
Travel Time (s)		9.1			10.5			18.8			10.4	

Intersection Summary	
Area Type:	Other

3: Valencia Road/Ryan Airfield Drive & Ajo Highway

10/11/2016

Lane Group	EBL	EBT	EBR	WBL	WBT	WBR	NBL	NBT	NBR	SBL	SBT	SBR
Traffic Volume (vph)	0	816	299	350	384	7	238	5	547	1	4	3
Future Volume (vph)	0	816	299	350	384	7	238	5	547	1	4	3
Confl. Peds. (#/hr)												
Confl. Bikes (#/hr)												
Peak Hour Factor	0.92	0.92	0.92	0.92	0.92	0.92	0.92	0.92	0.92	0.92	0.92	0.92
Growth Factor	100%	100%	100%	100%	100%	100%	100%	100%	100%	100%	100%	100%
Heavy Vehicles (%)	2%	2%	2%	2%	2%	2%	2%	2%	2%	2%	2%	2%
Bus Blockages (#/hr)	0	0	0	0	0	0	0	0	0	0	0	0
Parking (#/hr)		0										
Mid-Block Traffic (%)		0%			0%			0%			0%	
Adj. Flow (vph)	0	887	325	380	417	8	259	5	595	1	4	3
Shared Lane Traffic (%)												
Lane Group Flow (vph)	0	887	325	380	417	8	259	5	595	1	7	0

Intersection Summary

Lane Group	EBT	EBR	WBL	WBT	WBR	NBL	NBT	NBR	SBL	SBT	ø7
Lane Configurations											
Traffic Volume (vph)	816	299	350	384	7	238	5	547	1	4	
Future Volume (vph)	816	299	350	384	7	238	5	547	1	4	
Turn Type	NA	Perm	Prot	NA	Perm	pm+pt	NA	Perm	pm+pt	NA	
Protected Phases	4		3	8		5	2		1	6	7
Permitted Phases		4			8	2		2	6		
Detector Phase	4	4	3	8	8	5	2	2	1	6	
Switch Phase											
Minimum Initial (s)	4.0	4.0	5.0	4.0	4.0	5.0	4.0	4.0	5.0	4.0	5.0
Minimum Split (s)	20.0	20.0	9.5	20.0	20.0	9.5	20.0	20.0	9.5	20.0	9.5
Total Split (s)	50.0	50.0	26.0	66.5	66.5	19.4	54.5	54.5	9.5	44.6	9.5
Total Split (%)	35.7%	35.7%	18.6%	47.5%	47.5%	13.9%	38.9%	38.9%	6.8%	31.9%	7%
Yellow Time (s)	3.5	3.5	3.5	3.5	3.5	3.5	3.5	3.5	3.5	3.5	3.5
All-Red Time (s)	0.5	0.5	1.0	0.5	0.5	1.0	0.5	0.5	1.0	0.5	1.0
Lost Time Adjust (s)	0.0	0.0	0.0	0.0	0.0	0.0	0.0	0.0	0.0	0.0	
Total Lost Time (s)	4.0	4.0	4.5	4.0	4.0	4.5	4.0	4.0	4.5	4.0	
Lead/Lag	Lag	Lag	Lead	Lag	Lag	Lead	Lag	Lag	Lead	Lag	Lead
Lead-Lag Optimize?						Yes				Yes	
Recall Mode	None	None	None	None	None	None	Max	Max	None	None	None
Act Effct Green (s)	38.8	38.8	18.2	61.5	61.5	52.2	51.0	51.0	12.1	11.9	
Actuated g/C Ratio	0.32	0.32	0.15	0.50	0.50	0.43	0.42	0.42	0.10	0.10	
v/c Ratio	0.83	0.45	0.74	0.23	0.01	0.37	0.01	0.68	0.01	0.04	
Control Delay	46.9	5.4	60.5	17.4	0.0	27.3	26.4	16.0	38.0	36.5	
Queue Delay	0.0	0.0	0.0	0.0	0.0	0.0	0.0	0.0	0.0	0.0	
Total Delay	46.9	5.4	60.5	17.4	0.0	27.3	26.4	16.0	38.0	36.5	
LOS	D	A	E	B	A	C	C	B	D	D	
Approach Delay	35.8			37.5			19.5			36.7	
Approach LOS	D			D			B			D	

Intersection Summary

Cycle Length: 140
Actuated Cycle Length: 122.3
Natural Cycle: 70
Control Type: Semi Act-Uncoord
Maximum v/c Ratio: 0.83
Intersection Signal Delay: 31.4 Intersection LOS: C
Intersection Capacity Utilization 69.8% ICU Level of Service C
Analysis Period (min) 15

Splits and Phases: 3: Valencia Road/Ryan Airfield Drive & Ajo Highway

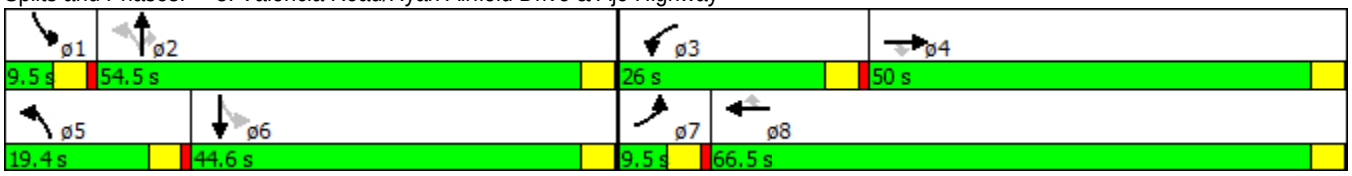

Phasings
3: Valencia Road/Ryan Airfield Drive & Ajo Highway

10/11/2016

Lane Group	EBT	EBR	WBL	WBT	WBR	NBL	NBT	NBR	SBL	SBT	ø7
Protected Phases	4		3	8		5	2		1	6	7
Permitted Phases		4			8	2		2	6		
Minimum Initial (s)	4.0	4.0	5.0	4.0	4.0	5.0	4.0	4.0	5.0	4.0	5.0
Minimum Split (s)	20.0	20.0	9.5	20.0	20.0	9.5	20.0	20.0	9.5	20.0	9.5
Total Split (s)	50.0	50.0	26.0	66.5	66.5	19.4	54.5	54.5	9.5	44.6	9.5
Total Split (%)	35.7%	35.7%	18.6%	47.5%	47.5%	13.9%	38.9%	38.9%	6.8%	31.9%	7%
Maximum Green (s)	46.0	46.0	21.5	62.5	62.5	14.9	50.5	50.5	5.0	40.6	5.0
Yellow Time (s)	3.5	3.5	3.5	3.5	3.5	3.5	3.5	3.5	3.5	3.5	3.5
All-Red Time (s)	0.5	0.5	1.0	0.5	0.5	1.0	0.5	0.5	1.0	0.5	1.0
Lead/Lag	Lag	Lag	Lead	Lag	Lag	Lead	Lag	Lag	Lead	Lag	Lead
Lead-Lag Optimize?						Yes				Yes	
Vehicle Extension (s)	3.0	3.0	3.0	3.0	3.0	3.0	3.0	3.0	3.0	3.0	3.0
Minimum Gap (s)	3.0	3.0	3.0	3.0	3.0	3.0	3.0	3.0	3.0	3.0	3.0
Time Before Reduce (s)	0.0	0.0	0.0	0.0	0.0	0.0	0.0	0.0	0.0	0.0	0.0
Time To Reduce (s)	0.0	0.0	0.0	0.0	0.0	0.0	0.0	0.0	0.0	0.0	0.0
Recall Mode	None	None	None	None	None	None	Max	Max	None	None	None
Walk Time (s)											
Flash Dont Walk (s)											
Pedestrian Calls (#/hr)											
90th %ile Green (s)	46.0	46.0	21.5	72.0	72.0	14.9	50.5	50.5	5.0	40.6	0.0
90th %ile Term Code	Max	Max	Max	Hold	Hold	Max	MaxR	MaxR	Max	Hold	Skip
70th %ile Green (s)	45.5	45.5	21.5	71.5	71.5	50.0	50.5	50.5	0.0	0.0	0.0
70th %ile Term Code	Gap	Gap	Max	Hold	Hold	Hold	MaxR	MaxR	Skip	Skip	Skip
50th %ile Green (s)	40.3	40.3	19.1	63.9	63.9	50.0	50.5	50.5	0.0	0.0	0.0
50th %ile Term Code	Gap	Gap	Gap	Hold	Hold	Hold	MaxR	MaxR	Skip	Skip	Skip
30th %ile Green (s)	34.9	34.9	16.5	55.9	55.9	50.0	50.5	50.5	0.0	0.0	0.0
30th %ile Term Code	Gap	Gap	Gap	Hold	Hold	Hold	MaxR	MaxR	Skip	Skip	Skip
10th %ile Green (s)	28.4	28.4	13.2	46.1	46.1	50.0	50.5	50.5	0.0	0.0	0.0
10th %ile Term Code	Gap	Gap	Gap	Hold	Hold	Hold	MaxR	MaxR	Skip	Skip	Skip

Intersection Summary
Cycle Length: 140
Actuated Cycle Length: 122.3
Control Type: Semi Act-Uncoord
90th %ile Actuated Cycle: 140
70th %ile Actuated Cycle: 130
50th %ile Actuated Cycle: 122.4
30th %ile Actuated Cycle: 114.4
10th %ile Actuated Cycle: 104.6

Lane Group	EBT	EBR	WBL	WBT	WBR	NBL	NBT	NBR	SBL	SBT
Lane Group Flow (vph)	887	325	380	417	8	259	5	595	1	7
v/c Ratio	0.83	0.45	0.74	0.23	0.01	0.37	0.01	0.68	0.01	0.04
Control Delay	46.9	5.4	60.5	17.4	0.0	27.3	26.4	16.0	38.0	36.5
Queue Delay	0.0	0.0	0.0	0.0	0.0	0.0	0.0	0.0	0.0	0.0
Total Delay	46.9	5.4	60.5	17.4	0.0	27.3	26.4	16.0	38.0	36.5
Queue Length 50th (ft)	335	0	148	90	0	140	2	139	1	3
Queue Length 95th (ft)	472	68	229	141	0	229	13	339	4	15
Internal Link Dist (ft)	651			767			886			455
Turn Bay Length (ft)		532	493		493	685		666	362	
Base Capacity (vph)	1277	803	609	1932	915	698	777	877	153	586
Starvation Cap Reductn	0	0	0	0	0	0	0	0	0	0
Spillback Cap Reductn	0	0	0	0	0	0	0	0	0	0
Storage Cap Reductn	0	0	0	0	0	0	0	0	0	0
Reduced v/c Ratio	0.69	0.40	0.62	0.22	0.01	0.37	0.01	0.68	0.01	0.01

Intersection Summary

Lanes and Geometrics

3: Valencia Road/Ryan Airfield Drive & Ajo Highway

10/11/2016

Lane Group	EBL	EBT	EBR	WBL	WBT	WBR	NBL	NBT	NBR	SBL	SBT	SBR
Lane Configurations												
Ideal Flow (vphpl)	1900	1900	1900	1900	1900	1900	1900	1900	1900	1900	1900	1900
Lane Width (ft)	12	12	12	12	12	12	12	12	12	12	12	12
Grade (%)		0%			0%			0%			0%	
Storage Length (ft)	495		532	493		685	685		666	362		125
Storage Lanes	1		1	2		1	1		1	1		0
Taper Length (ft)	25			25			25			25		
Lane Util. Factor	1.00	0.95	1.00	0.97	0.95	1.00	1.00	1.00	1.00	1.00	1.00	1.00
Ped Bike Factor												
Frt			0.850			0.850			0.850		0.936	
Flt Protected				0.950			0.950			0.950		
Satd. Flow (prot)	1863	3539	1583	3433	3539	1583	1770	1863	1583	1770	1744	0
Flt Permitted				0.950			0.702					
Satd. Flow (perm)	1863	3539	1583	3433	3539	1583	1308	1863	1583	1863	1744	0
Right Turn on Red			Yes			Yes			Yes			Yes
Satd. Flow (RTOR)			384			117			597		3	
Link Speed (mph)		55			55			35			35	
Link Distance (ft)		731			847			1101			535	
Travel Time (s)		9.1			10.5			21.4			10.4	

Intersection Summary

Area Type: Other

Volume

3: Valencia Road/Ryan Airfield Drive & Ajo Highway

10/11/2016

Lane Group	EBL	EBT	EBR	WBL	WBT	WBR	NBL	NBT	NBR	SBL	SBT	SBR
Traffic Volume (vph)	0	702	353	802	831	3	426	0	499	4	4	3
Future Volume (vph)	0	702	353	802	831	3	426	0	499	4	4	3
Confl. Peds. (#/hr)												
Confl. Bikes (#/hr)												
Peak Hour Factor	0.92	0.92	0.92	0.92	0.92	0.92	0.92	0.92	0.92	0.92	0.92	0.92
Growth Factor	100%	100%	100%	100%	100%	100%	100%	100%	100%	100%	100%	100%
Heavy Vehicles (%)	2%	2%	2%	2%	2%	2%	2%	2%	2%	2%	2%	2%
Bus Blockages (#/hr)	0	0	0	0	0	0	0	0	0	0	0	0
Parking (#/hr)												
Mid-Block Traffic (%)		0%			0%			0%			0%	
Adj. Flow (vph)	0	763	384	872	903	3	463	0	542	4	4	3
Shared Lane Traffic (%)												
Lane Group Flow (vph)	0	763	384	872	903	3	463	0	542	4	7	0

Intersection Summary

Lane Group	EBT	EBR	WBL	WBT	WBR	NBL	NBR	SBL	SBT	ø7
Lane Configurations										
Traffic Volume (vph)	702	353	802	831	3	426	499	4	4	
Future Volume (vph)	702	353	802	831	3	426	499	4	4	
Turn Type	NA	Perm	Prot	NA	Perm	pm+pt	Perm	pm+pt	NA	
Protected Phases	4		3	8		5		1	6	7
Permitted Phases		4			8	2	2	6		
Detector Phase	4	4	3	8	8	5	2	1	6	
Switch Phase										
Minimum Initial (s)	4.0	4.0	5.0	4.0	4.0	5.0	4.0	5.0	4.0	5.0
Minimum Split (s)	20.0	20.0	9.5	20.0	20.0	9.5	20.0	9.5	20.0	9.5
Total Split (s)	39.0	39.0	45.0	74.5	74.5	36.0	46.5	9.5	20.0	9.5
Total Split (%)	27.9%	27.9%	32.1%	53.2%	53.2%	25.7%	33.2%	6.8%	14.3%	7%
Yellow Time (s)	3.5	3.5	3.5	3.5	3.5	3.5	3.5	3.5	3.5	3.5
All-Red Time (s)	1.0	1.0	1.0	1.0	1.0	1.0	1.0	1.0	1.0	1.0
Lost Time Adjust (s)	0.0	0.0	0.0	0.0	0.0	0.0	0.0	0.0	0.0	
Total Lost Time (s)	4.5	4.5	4.5	4.5	4.5	4.5	4.5	4.5	4.5	
Lead/Lag	Lag	Lag	Lead	Lag	Lag	Lead	Lag	Lead	Lag	Lead
Lead-Lag Optimize?										
Recall Mode	None	None	None	None	None	None	Min	None	None	None
Act Effct Green (s)	31.1	31.1	34.0	69.7	69.7	32.1	30.5	6.3	6.0	
Actuated g/C Ratio	0.28	0.28	0.31	0.63	0.63	0.29	0.27	0.06	0.05	
v/c Ratio	0.77	0.53	0.83	0.41	0.00	0.92	0.62	0.04	0.07	
Control Delay	44.0	6.6	44.5	11.3	0.0	64.1	5.1	43.5	47.3	
Queue Delay	0.0	0.0	0.0	0.0	0.0	0.0	0.0	0.0	0.0	
Total Delay	44.0	6.6	44.5	11.3	0.0	64.1	5.1	43.5	47.3	
LOS	D	A	D	B	A	E	A	D	D	
Approach Delay	31.5			27.6					45.9	
Approach LOS	C			C					D	

Intersection Summary	
Cycle Length: 140	
Actuated Cycle Length: 111	
Natural Cycle: 90	
Control Type: Actuated-Uncoordinated	
Maximum v/c Ratio: 0.92	
Intersection Signal Delay: 30.0	Intersection LOS: C
Intersection Capacity Utilization 83.8%	ICU Level of Service E
Analysis Period (min) 15	

Splits and Phases: 3: Valencia Road/Ryan Airfield Drive & Ajo Highway

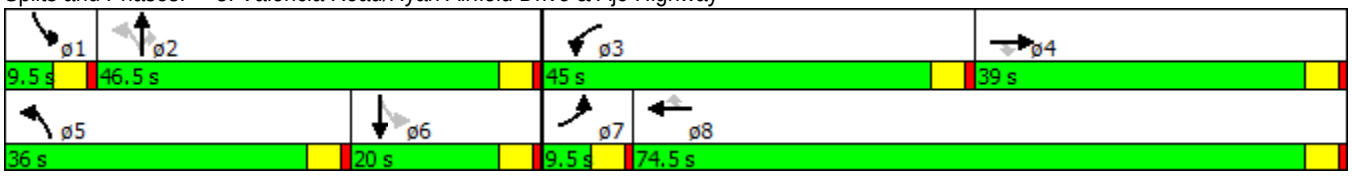

Phasings
3: Valencia Road/Ryan Airfield Drive & Ajo Highway

10/11/2016

Lane Group	EBT	EBR	WBL	WBT	WBR	NBL	NBR	SBL	SBT	ø7
Protected Phases	4		3	8		5		1	6	7
Permitted Phases		4			8	2	2	6		
Minimum Initial (s)	4.0	4.0	5.0	4.0	4.0	5.0	4.0	5.0	4.0	5.0
Minimum Split (s)	20.0	20.0	9.5	20.0	20.0	9.5	20.0	9.5	20.0	9.5
Total Split (s)	39.0	39.0	45.0	74.5	74.5	36.0	46.5	9.5	20.0	9.5
Total Split (%)	27.9%	27.9%	32.1%	53.2%	53.2%	25.7%	33.2%	6.8%	14.3%	7%
Maximum Green (s)	34.5	34.5	40.5	70.0	70.0	31.5	42.0	5.0	15.5	5.0
Yellow Time (s)	3.5	3.5	3.5	3.5	3.5	3.5	3.5	3.5	3.5	3.5
All-Red Time (s)	1.0	1.0	1.0	1.0	1.0	1.0	1.0	1.0	1.0	1.0
Lead/Lag	Lag	Lag	Lead	Lag	Lag	Lead	Lag	Lead	Lag	Lead
Lead-Lag Optimize?										
Vehicle Extension (s)	3.0	3.0	3.0	3.0	3.0	3.0	3.0	3.0	3.0	3.0
Minimum Gap (s)	3.0	3.0	3.0	3.0	3.0	3.0	3.0	3.0	3.0	3.0
Time Before Reduce (s)	0.0	0.0	0.0	0.0	0.0	0.0	0.0	0.0	0.0	0.0
Time To Reduce (s)	0.0	0.0	0.0	0.0	0.0	0.0	0.0	0.0	0.0	0.0
Recall Mode	None	None	None	None	None	None	Min	None	None	None
Walk Time (s)										
Flash Dont Walk (s)										
Pedestrian Calls (#/hr)										
90th %ile Green (s)	34.5	34.5	40.5	79.5	79.5	31.5	33.5	5.0	7.0	0.0
90th %ile Term Code	Max	Max	Max	Hold	Hold	Max	Hold	Max	Gap	Skip
70th %ile Green (s)	34.5	34.5	38.9	77.9	77.9	31.5	31.5	0.0	0.0	0.0
70th %ile Term Code	Max	Max	Gap	Hold	Hold	Max	Hold	Skip	Skip	Skip
50th %ile Green (s)	33.5	33.5	35.3	73.3	73.3	31.5	31.5	0.0	0.0	0.0
50th %ile Term Code	Gap	Gap	Gap	Hold	Hold	Max	Hold	Skip	Skip	Skip
30th %ile Green (s)	30.0	30.0	32.0	66.5	66.5	31.5	31.5	0.0	0.0	0.0
30th %ile Term Code	Gap	Gap	Gap	Hold	Hold	Max	Hold	Skip	Skip	Skip
10th %ile Green (s)	22.9	22.9	24.1	51.5	51.5	23.9	23.9	0.0	0.0	0.0
10th %ile Term Code	Gap	Gap	Gap	Hold	Hold	Gap	Hold	Skip	Skip	Skip

Intersection Summary
Cycle Length: 140
Actuated Cycle Length: 111
Control Type: Actuated-Uncoordinated
90th %ile Actuated Cycle: 131.5
70th %ile Actuated Cycle: 118.4
50th %ile Actuated Cycle: 113.8
30th %ile Actuated Cycle: 107
10th %ile Actuated Cycle: 84.4

Lane Group	EBT	EBR	WBL	WBT	WBR	NBL	NBR	SBL	SBT
Lane Group Flow (vph)	763	384	872	903	3	463	542	4	7
v/c Ratio	0.77	0.53	0.83	0.41	0.00	0.92	0.62	0.04	0.07
Control Delay	44.0	6.6	44.5	11.3	0.0	64.1	5.1	43.5	47.3
Queue Delay	0.0	0.0	0.0	0.0	0.0	0.0	0.0	0.0	0.0
Total Delay	44.0	6.6	44.5	11.3	0.0	64.1	5.1	43.5	47.3
Queue Length 50th (ft)	264	0	303	153	0	332	0	3	3
Queue Length 95th (ft)	402	82	437	250	0	#556	48	11	20
Internal Link Dist (ft)	651			767					455
Turn Bay Length (ft)		532	493		685	685	666	362	
Base Capacity (vph)	1124	764	1280	2399	1111	536	978	101	251
Starvation Cap Reductn	0	0	0	0	0	0	0	0	0
Spillback Cap Reductn	0	0	0	0	0	0	0	0	0
Storage Cap Reductn	0	0	0	0	0	0	0	0	0
Reduced v/c Ratio	0.68	0.50	0.68	0.38	0.00	0.86	0.55	0.04	0.03

Intersection Summary

95th percentile volume exceeds capacity, queue may be longer.
Queue shown is maximum after two cycles.

Movement	EBL	EBT	EBR	WBL	WBT	WBR	NBL	NBT	NBR	SBL	SBT	SBR
Lane Configurations												
Traffic Volume (veh/h)	10	909	14	47	372	33	43	5	264	96	2	28
Future Volume (veh/h)	10	909	14	47	372	33	43	5	264	96	2	28
Number	7	4	14	3	8	18	5	2	12	1	6	16
Initial Q, veh	0	0	0	0	0	0	0	0	0	0	0	0
Ped-Bike Adj (A_pbT)	1.00		1.00	1.00		1.00	1.00		1.00	1.00		1.00
Parking Bus Adj	1.00	1.00	1.00	1.00	1.00	1.00	1.00	1.00	1.00	1.00	1.00	1.00
Adj Sat Flow, veh/h/ln	1863	1696	1696	1652	1652	1652	1583	1583	1583	1863	1863	1863
Adj Flow Rate, veh/h	11	988	15	51	404	36	47	5	287	104	2	30
Adj No. of Lanes	1	2	1	1	2	1	1	1	1	1	1	1
Peak Hour Factor	0.92	0.92	0.92	0.92	0.92	0.92	0.92	0.92	0.92	0.92	0.92	0.92
Percent Heavy Veh, %	2	12	12	15	15	15	20	20	20	2	2	2
Opposing Right Turn Influence	Yes			Yes			Yes			Yes		
Cap, veh/h	478	1291	578	237	1592	712	486	605	514	400	517	439
HCM Platoon Ratio	1.00	1.00	1.00	1.00	1.00	1.00	1.00	1.00	1.00	1.00	1.00	1.00
Prop Arrive On Green	0.40	0.40	0.40	0.04	0.51	0.51	0.04	0.38	0.38	0.28	0.28	0.28
Ln Grp Delay, s/veh	13.1	20.7	13.1	14.3	10.1	9.0	16.0	13.9	21.9	21.2	18.9	19.3
Ln Grp LOS	B	C	B	B	B	A	B	B	C	C	B	B
Approach Vol, veh/h		1014			491			339			136	
Approach Delay, s/veh		20.5			10.5			20.9			20.7	
Approach LOS		C			B			C			C	

Timer:	1	2	3	4	5	6	7	8
Assigned Phs		2	3	4	5	6		8
Case No		3.0	1.2	5.0	1.2	5.0		3.0
Phs Duration (G+Y+Rc), s		31.6	7.7	32.9	7.6	24.0		40.6
Change Period (Y+Rc), s		4.0	4.5	4.0	4.5	4.0		4.0
Max Green (Gmax), s		27.6	5.9	34.0	5.1	18.0		44.4
Max Allow Headway (MAH), s		4.2	3.9	5.2	3.9	4.2		5.2
Max Q Clear (g_c+l1), s		14.1	3.3	21.1	3.5	7.5		7.3
Green Ext Time (g_e), s		1.4	0.0	7.8	0.0	1.2		13.8
Prob of Phs Call (p_c)		1.00	0.64	1.00	0.61	1.00		1.00
Prob of Max Out (p_x)		0.00	1.00	0.61	1.00	0.07		0.13

Left-Turn Movement Data								
Assigned Mvmt			3	7	5	1		
Mvmt Sat Flow, veh/h			1573	945	1508	1083		

Through Movement Data								
Assigned Mvmt		2		4		6		8
Mvmt Sat Flow, veh/h		1583		3223		1863		3139

Right-Turn Movement Data								
Assigned Mvmt		12		14		16		18
Mvmt Sat Flow, veh/h		1346		1442		1583		1404

Left Lane Group Data								
Assigned Mvmt	0	0	3	7	5	1	0	0
Lane Assignment			(Pr/Pm)		(Pr/Pm)			

Lanes in Grp	0	0	1	1	1	1	0	0
Grp Vol (v), veh/h	0	0	51	11	47	104	0	0
Grp Sat Flow (s), veh/h/ln	0	0	1573	945	1508	1083	0	0
Q Serve Time (g_s), s	0.0	0.0	1.3	0.5	1.5	5.5	0.0	0.0
Cycle Q Clear Time (g_c), s	0.0	0.0	1.3	0.5	1.5	5.5	0.0	0.0
Perm LT Sat Flow (s_l), veh/h/ln	0	0	496	945	1166	1083	0	0
Shared LT Sat Flow (s_sh), veh/h/ln	0	0	0	0	0	0	0	0
Perm LT Eff Green (g_p), s	0.0	0.0	30.9	28.9	22.0	20.0	0.0	0.0
Perm LT Serve Time (g_u), s	0.0	0.0	9.8	28.9	20.0	20.0	0.0	0.0
Perm LT Q Serve Time (g_ps), s	0.0	0.0	2.4	0.5	0.1	5.5	0.0	0.0
Time to First Blk (g_f), s	0.0	0.0	0.0	0.0	0.0	0.0	0.0	0.0
Serve Time pre Blk (g_fs), s	0.0	0.0	0.0	0.0	0.0	0.0	0.0	0.0
Prop LT Inside Lane (P_L)	0.00	0.00	1.00	1.00	1.00	1.00	0.00	0.00
Lane Grp Cap (c), veh/h	0	0	237	478	486	400	0	0
V/C Ratio (X)	0.00	0.00	0.22	0.02	0.10	0.26	0.00	0.00
Avail Cap (c_a), veh/h	0	0	295	545	529	400	0	0
Upstream Filter (I)	0.00	0.00	1.00	1.00	1.00	1.00	0.00	0.00
Uniform Delay (d1), s/veh	0.0	0.0	13.8	13.1	15.9	20.9	0.0	0.0
Incr Delay (d2), s/veh	0.0	0.0	0.5	0.0	0.1	0.3	0.0	0.0
Initial Q Delay (d3), s/veh	0.0	0.0	0.0	0.0	0.0	0.0	0.0	0.0
Control Delay (d), s/veh	0.0	0.0	14.3	13.1	16.0	21.2	0.0	0.0
1st-Term Q (Q1), veh/ln	0.0	0.0	0.5	0.1	0.6	1.6	0.0	0.0
2nd-Term Q (Q2), veh/ln	0.0	0.0	0.0	0.0	0.0	0.0	0.0	0.0
3rd-Term Q (Q3), veh/ln	0.0	0.0	0.0	0.0	0.0	0.0	0.0	0.0
%ile Back of Q Factor (f_B%)	0.00	0.00	1.00	1.00	1.00	1.00	0.00	0.00
%ile Back of Q (50%), veh/ln	0.0	0.0	0.6	0.1	0.6	1.7	0.0	0.0
%ile Storage Ratio (RQ%)	0.00	0.00	0.11	0.02	0.12	0.29	0.00	0.00
Initial Q (Qb), veh	0.0	0.0	0.0	0.0	0.0	0.0	0.0	0.0
Final (Residual) Q (Qe), veh	0.0	0.0	0.0	0.0	0.0	0.0	0.0	0.0
Sat Delay (ds), s/veh	0.0	0.0	0.0	0.0	0.0	0.0	0.0	0.0
Sat Q (Qs), veh	0.0	0.0	0.0	0.0	0.0	0.0	0.0	0.0
Sat Cap (cs), veh/h	0	0	0	0	0	0	0	0
Initial Q Clear Time (tc), h	0.0	0.0	0.0	0.0	0.0	0.0	0.0	0.0
Middle Lane Group Data								
Assigned Mvmt	0	2	0	4	0	6	0	8
Lane Assignment		T		T		T		T
Lanes in Grp	0	1	0	2	0	1	0	2
Grp Vol (v), veh/h	0	5	0	988	0	2	0	404
Grp Sat Flow (s), veh/h/ln	0	1583	0	1612	0	1863	0	1570
Q Serve Time (g_s), s	0.0	0.1	0.0	19.1	0.0	0.1	0.0	5.3
Cycle Q Clear Time (g_c), s	0.0	0.1	0.0	19.1	0.0	0.1	0.0	5.3
Lane Grp Cap (c), veh/h	0	605	0	1291	0	517	0	1592
V/C Ratio (X)	0.00	0.01	0.00	0.77	0.00	0.00	0.00	0.25
Avail Cap (c_a), veh/h	0	605	0	1517	0	517	0	1929
Upstream Filter (I)	0.00	1.00	0.00	1.00	0.00	1.00	0.00	1.00
Uniform Delay (d1), s/veh	0.0	13.8	0.0	18.7	0.0	18.9	0.0	10.1
Incr Delay (d2), s/veh	0.0	0.0	0.0	2.0	0.0	0.0	0.0	0.1
Initial Q Delay (d3), s/veh	0.0	0.0	0.0	0.0	0.0	0.0	0.0	0.0
Control Delay (d), s/veh	0.0	13.9	0.0	20.7	0.0	18.9	0.0	10.1
1st-Term Q (Q1), veh/ln	0.0	0.1	0.0	8.5	0.0	0.0	0.0	2.2

2nd-Term Q (Q2), veh/ln	0.0	0.0	0.0	0.4	0.0	0.0	0.0	0.0
3rd-Term Q (Q3), veh/ln	0.0	0.0	0.0	0.0	0.0	0.0	0.0	0.0
%ile Back of Q Factor (f_B%)	0.00	1.00	0.00	1.00	0.00	1.00	0.00	1.00
%ile Back of Q (50%), veh/ln	0.0	0.1	0.0	8.9	0.0	0.0	0.0	2.3
%ile Storage Ratio (RQ%)	0.00	0.00	0.00	0.36	0.00	0.00	0.00	0.08
Initial Q (Qb), veh	0.0	0.0	0.0	0.0	0.0	0.0	0.0	0.0
Final (Residual) Q (Qe), veh	0.0	0.0	0.0	0.0	0.0	0.0	0.0	0.0
Sat Delay (ds), s/veh	0.0	0.0	0.0	0.0	0.0	0.0	0.0	0.0
Sat Q (Qs), veh	0.0	0.0	0.0	0.0	0.0	0.0	0.0	0.0
Sat Cap (cs), veh/h	0	0	0	0	0	0	0	0
Initial Q Clear Time (tc), h	0.0	0.0	0.0	0.0	0.0	0.0	0.0	0.0
Right Lane Group Data								
Assigned Mvmt	0	12	0	14	0	16	0	18
Lane Assignment		R		R		R		R
Lanes in Grp	0	1	0	1	0	1	0	1
Grp Vol (v), veh/h	0	287	0	15	0	30	0	36
Grp Sat Flow (s), veh/h/ln	0	1346	0	1442	0	1583	0	1404
Q Serve Time (g_s), s	0.0	12.1	0.0	0.5	0.0	1.0	0.0	0.9
Cycle Q Clear Time (g_c), s	0.0	12.1	0.0	0.5	0.0	1.0	0.0	0.9
Prot RT Sat Flow (s_R), veh/h/ln	0.0	0.0	0.0	0.0	0.0	0.0	0.0	0.0
Prot RT Eff Green (g_R), s	0.0	0.0	0.0	0.0	0.0	0.0	0.0	0.0
Prop RT Outside Lane (P_R)	0.00	1.00	0.00	1.00	0.00	1.00	0.00	1.00
Lane Grp Cap (c), veh/h	0	514	0	578	0	439	0	712
V/C Ratio (X)	0.00	0.56	0.00	0.03	0.00	0.07	0.00	0.05
Avail Cap (c_a), veh/h	0	514	0	679	0	439	0	863
Upstream Filter (I)	0.00	1.00	0.00	1.00	0.00	1.00	0.00	1.00
Uniform Delay (d1), s/veh	0.0	17.5	0.0	13.1	0.0	19.2	0.0	9.0
Incr Delay (d2), s/veh	0.0	4.3	0.0	0.0	0.0	0.1	0.0	0.0
Initial Q Delay (d3), s/veh	0.0	0.0	0.0	0.0	0.0	0.0	0.0	0.0
Control Delay (d), s/veh	0.0	21.9	0.0	13.1	0.0	19.3	0.0	9.0
1st-Term Q (Q1), veh/ln	0.0	4.4	0.0	0.2	0.0	0.4	0.0	0.4
2nd-Term Q (Q2), veh/ln	0.0	0.6	0.0	0.0	0.0	0.0	0.0	0.0
3rd-Term Q (Q3), veh/ln	0.0	0.0	0.0	0.0	0.0	0.0	0.0	0.0
%ile Back of Q Factor (f_B%)	0.00	1.00	0.00	1.00	0.00	1.00	0.00	1.00
%ile Back of Q (50%), veh/ln	0.0	5.1	0.0	0.2	0.0	0.4	0.0	0.4
%ile Storage Ratio (RQ%)	0.00	0.98	0.00	0.03	0.00	0.08	0.00	0.07
Initial Q (Qb), veh	0.0	0.0	0.0	0.0	0.0	0.0	0.0	0.0
Final (Residual) Q (Qe), veh	0.0	0.0	0.0	0.0	0.0	0.0	0.0	0.0
Sat Delay (ds), s/veh	0.0	0.0	0.0	0.0	0.0	0.0	0.0	0.0
Sat Q (Qs), veh	0.0	0.0	0.0	0.0	0.0	0.0	0.0	0.0
Sat Cap (cs), veh/h	0	0	0	0	0	0	0	0
Initial Q Clear Time (tc), h	0.0	0.0	0.0	0.0	0.0	0.0	0.0	0.0
Intersection Summary								
HCM 2010 Ctrl Delay		18.1						
HCM 2010 LOS		B						

Movement	EBL	EBT	EBR	WBL	WBT	WBR	NBL	NBT	NBR	SBL	SBT	SBR
Lane Configurations												
Traffic Volume (veh/h)	10	909	14	47	372	33	43	5	264	96	2	28
Future Volume (veh/h)	10	909	14	47	372	33	43	5	264	96	2	28
Number	7	4	14	3	8	18	5	2	12	1	6	16
Initial Q (Qb), veh	0	0	0	0	0	0	0	0	0	0	0	0
Ped-Bike Adj(A_pbT)	1.00		1.00	1.00		1.00	1.00		1.00	1.00		1.00
Parking Bus, Adj	1.00	1.00	1.00	1.00	1.00	1.00	1.00	1.00	1.00	1.00	1.00	1.00
Adj Sat Flow, veh/h/ln	1863	1696	1696	1652	1652	1652	1583	1583	1583	1863	1863	1863
Adj Flow Rate, veh/h	11	988	15	51	404	36	47	5	287	104	2	30
Adj No. of Lanes	1	2	1	1	2	1	1	1	1	1	1	1
Peak Hour Factor	0.92	0.92	0.92	0.92	0.92	0.92	0.92	0.92	0.92	0.92	0.92	0.92
Percent Heavy Veh, %	2	12	12	15	15	15	20	20	20	2	2	2
Cap, veh/h	478	1291	578	237	1592	712	486	605	514	400	517	439
Arrive On Green	0.40	0.40	0.40	0.04	0.51	0.51	0.04	0.38	0.38	0.28	0.28	0.28
Sat Flow, veh/h	945	3223	1442	1573	3139	1404	1508	1583	1346	1083	1863	1583
Grp Volume(v), veh/h	11	988	15	51	404	36	47	5	287	104	2	30
Grp Sat Flow(s),veh/h/ln	945	1612	1442	1573	1570	1404	1508	1583	1346	1083	1863	1583
Q Serve(g_s), s	0.5	19.1	0.5	1.3	5.3	0.9	1.5	0.1	12.1	5.5	0.1	1.0
Cycle Q Clear(g_c), s	0.5	19.1	0.5	1.3	5.3	0.9	1.5	0.1	12.1	5.5	0.1	1.0
Prop In Lane	1.00		1.00	1.00		1.00	1.00		1.00	1.00		1.00
Lane Grp Cap(c), veh/h	478	1291	578	237	1592	712	486	605	514	400	517	439
V/C Ratio(X)	0.02	0.77	0.03	0.22	0.25	0.05	0.10	0.01	0.56	0.26	0.00	0.07
Avail Cap(c_a), veh/h	545	1517	679	295	1929	863	529	605	514	400	517	439
HCM Platoon Ratio	1.00	1.00	1.00	1.00	1.00	1.00	1.00	1.00	1.00	1.00	1.00	1.00
Upstream Filter(I)	1.00	1.00	1.00	1.00	1.00	1.00	1.00	1.00	1.00	1.00	1.00	1.00
Uniform Delay (d), s/veh	13.1	18.7	13.1	13.8	10.1	9.0	15.9	13.8	17.5	20.9	18.9	19.2
Incr Delay (d2), s/veh	0.0	2.0	0.0	0.5	0.1	0.0	0.1	0.0	4.3	0.3	0.0	0.1
Initial Q Delay(d3),s/veh	0.0	0.0	0.0	0.0	0.0	0.0	0.0	0.0	0.0	0.0	0.0	0.0
%ile BackOfQ(50%),veh/ln	0.1	8.9	0.2	0.6	2.3	0.4	0.6	0.1	5.1	1.7	0.0	0.4
LnGrp Delay(d),s/veh	13.1	20.7	13.1	14.3	10.1	9.0	16.0	13.9	21.9	21.2	18.9	19.3
LnGrp LOS	B	C	B	B	B	A	B	B	C	C	B	B
Approach Vol, veh/h		1014			491			339			136	
Approach Delay, s/veh		20.5			10.5			20.9			20.7	
Approach LOS		C			B			C			C	

Timer	1	2	3	4	5	6	7	8
Assigned Phs		2	3	4	5	6		8
Phs Duration (G+Y+Rc), s		31.6	7.7	32.9	7.6	24.0		40.6
Change Period (Y+Rc), s		4.0	4.5	4.0	4.5	4.0		4.0
Max Green Setting (Gmax), s		27.6	5.9	34.0	5.1	18.0		44.4
Max Q Clear Time (g_c+I1), s		14.1	3.3	21.1	3.5	7.5		7.3
Green Ext Time (p_c), s		1.4	0.0	7.8	0.0	1.2		13.8

Intersection Summary	
HCM 2010 Ctrl Delay	18.1
HCM 2010 LOS	B

Movement	EBL	EBT	EBR	WBL	WBT	WBR	NBL	NBT	NBR	SBL	SBT	SBR
Lane Configurations												
Traffic Volume (veh/h)	17	508	77	76	997	52	14	5	45	31	5	10
Future Volume (veh/h)	17	508	77	76	997	52	14	5	45	31	5	10
Number	7	4	14	3	8	18	5	2	12	1	6	16
Initial Q, veh	0	0	0	0	0	0	0	0	0	0	0	0
Ped-Bike Adj (A_pbT)	1.00		1.00	1.00		1.00	1.00		1.00	1.00		1.00
Parking Bus Adj	1.00	1.00	1.00	1.00	1.00	1.00	1.00	1.00	1.00	1.00	1.00	1.00
Adj Sat Flow, veh/h/ln	1863	1696	1696	1652	1652	1652	1583	1583	1583	1863	1863	1863
Adj Flow Rate, veh/h	18	552	84	83	1084	57	15	5	49	34	5	11
Adj No. of Lanes	1	2	1	1	2	1	1	1	1	1	1	1
Peak Hour Factor	0.92	0.92	0.92	0.92	0.92	0.92	0.92	0.92	0.92	0.92	0.92	0.92
Percent Heavy Veh, %	2	12	12	15	15	15	20	20	20	2	2	2
Opposing Right Turn Influence	Yes			Yes			Yes			Yes		
Cap, veh/h	204	1177	526	353	1520	680	508	640	544	535	603	512
HCM Platoon Ratio	1.00	1.00	1.00	1.00	1.00	1.00	1.00	1.00	1.00	1.00	1.00	1.00
Prop Arrive On Green	0.37	0.37	0.37	0.06	0.48	0.48	0.02	0.40	0.40	0.32	0.32	0.32
Ln Grp Delay, s/veh	23.3	17.7	15.5	12.9	15.6	10.0	14.5	12.8	13.5	16.9	16.5	16.5
Ln Grp LOS	C	B	B	B	B	A	B	B	B	B	B	B
Approach Vol, veh/h		654			1224			69			50	
Approach Delay, s/veh		17.6			15.1			13.7			16.8	
Approach LOS		B			B			B			B	

Timer:	1	2	3	4	5	6	7	8
Assigned Phs		2	3	4	5	6		8
Case No		3.0	1.2	5.0	1.2	5.0		3.0
Phs Duration (G+Y+Rc), s		33.0	8.5	30.2	5.8	27.2		38.7
Change Period (Y+Rc), s		4.0	4.5	4.0	4.5	4.0		4.0
Max Green (Gmax), s		29.0	7.5	31.0	5.5	19.0		43.0
Max Allow Headway (MAH), s		4.1	3.9	5.2	3.9	4.1		5.2
Max Q Clear (g_c+l1), s		3.6	4.2	15.1	2.5	3.3		21.5
Green Ext Time (g_e), s		0.3	0.0	10.7	0.0	0.2		13.2
Prob of Phs Call (p_c)		1.00	0.81	1.00	0.26	0.87		1.00
Prob of Max Out (p_x)		0.00	1.00	0.64	1.00	0.00		0.51

Left-Turn Movement Data								
Assigned Mvmt			3	7	5	1		
Mvmt Sat Flow, veh/h			1573	491	1508	1345		

Through Movement Data								
Assigned Mvmt		2		4		6		8
Mvmt Sat Flow, veh/h		1583		3223		1863		3139

Right-Turn Movement Data								
Assigned Mvmt		12		14		16		18
Mvmt Sat Flow, veh/h		1346		1442		1583		1404

Left Lane Group Data								
Assigned Mvmt	0	0	3	7	5	1	0	0
Lane Assignment			(Pr/Pm)		(Pr/Pm)			

Lanes in Grp	0	0	1	1	1	1	0	0
Grp Vol (v), veh/h	0	0	83	18	15	34	0	0
Grp Sat Flow (s), veh/h/ln	0	0	1573	491	1508	1345	0	0
Q Serve Time (g_s), s	0.0	0.0	2.2	2.2	0.5	1.3	0.0	0.0
Cycle Q Clear Time (g_c), s	0.0	0.0	2.2	13.1	0.5	1.3	0.0	0.0
Perm LT Sat Flow (s_l), veh/h/ln	0	0	699	491	1183	1345	0	0
Shared LT Sat Flow (s_sh), veh/h/ln	0	0	0	0	0	0	0	0
Perm LT Eff Green (g_p), s	0.0	0.0	28.2	26.2	25.2	23.2	0.0	0.0
Perm LT Serve Time (g_u), s	0.0	0.0	16.8	15.2	23.1	23.2	0.0	0.0
Perm LT Q Serve Time (g_ps), s	0.0	0.0	1.5	2.2	0.0	1.3	0.0	0.0
Time to First Blk (g_f), s	0.0	0.0	0.0	0.0	0.0	0.0	0.0	0.0
Serve Time pre Blk (g_fs), s	0.0	0.0	0.0	0.0	0.0	0.0	0.0	0.0
Prop LT Inside Lane (P_L)	0.00	0.00	1.00	1.00	1.00	1.00	0.00	0.00
Lane Grp Cap (c), veh/h	0	0	353	204	508	535	0	0
V/C Ratio (X)	0.00	0.00	0.24	0.09	0.03	0.06	0.00	0.00
Avail Cap (c_a), veh/h	0	0	428	237	597	535	0	0
Upstream Filter (I)	0.00	0.00	1.00	1.00	1.00	1.00	0.00	0.00
Uniform Delay (d1), s/veh	0.0	0.0	12.5	23.1	14.4	16.8	0.0	0.0
Incr Delay (d2), s/veh	0.0	0.0	0.3	0.2	0.0	0.0	0.0	0.0
Initial Q Delay (d3), s/veh	0.0	0.0	0.0	0.0	0.0	0.0	0.0	0.0
Control Delay (d), s/veh	0.0	0.0	12.9	23.3	14.5	16.9	0.0	0.0
1st-Term Q (Q1), veh/ln	0.0	0.0	0.9	0.3	0.2	0.5	0.0	0.0
2nd-Term Q (Q2), veh/ln	0.0	0.0	0.0	0.0	0.0	0.0	0.0	0.0
3rd-Term Q (Q3), veh/ln	0.0	0.0	0.0	0.0	0.0	0.0	0.0	0.0
%ile Back of Q Factor (f_B%)	0.00	0.00	1.00	1.00	1.00	1.00	0.00	0.00
%ile Back of Q (50%), veh/ln	0.0	0.0	1.0	0.3	0.2	0.5	0.0	0.0
%ile Storage Ratio (RQ%)	0.00	0.00	0.18	0.05	0.04	0.08	0.00	0.00
Initial Q (Qb), veh	0.0	0.0	0.0	0.0	0.0	0.0	0.0	0.0
Final (Residual) Q (Qe), veh	0.0	0.0	0.0	0.0	0.0	0.0	0.0	0.0
Sat Delay (ds), s/veh	0.0	0.0	0.0	0.0	0.0	0.0	0.0	0.0
Sat Q (Qs), veh	0.0	0.0	0.0	0.0	0.0	0.0	0.0	0.0
Sat Cap (cs), veh/h	0	0	0	0	0	0	0	0
Initial Q Clear Time (tc), h	0.0	0.0	0.0	0.0	0.0	0.0	0.0	0.0
Middle Lane Group Data								
Assigned Mvmt	0	2	0	4	0	6	0	8
Lane Assignment		T		T		T		T
Lanes in Grp	0	1	0	2	0	1	0	2
Grp Vol (v), veh/h	0	5	0	552	0	5	0	1084
Grp Sat Flow (s), veh/h/ln	0	1583	0	1612	0	1863	0	1570
Q Serve Time (g_s), s	0.0	0.1	0.0	9.4	0.0	0.1	0.0	19.5
Cycle Q Clear Time (g_c), s	0.0	0.1	0.0	9.4	0.0	0.1	0.0	19.5
Lane Grp Cap (c), veh/h	0	640	0	1177	0	603	0	1520
V/C Ratio (X)	0.00	0.01	0.00	0.47	0.00	0.01	0.00	0.71
Avail Cap (c_a), veh/h	0	640	0	1393	0	603	0	1882
Upstream Filter (I)	0.00	1.00	0.00	1.00	0.00	1.00	0.00	1.00
Uniform Delay (d1), s/veh	0.0	12.8	0.0	17.4	0.0	16.5	0.0	14.6
Incr Delay (d2), s/veh	0.0	0.0	0.0	0.3	0.0	0.0	0.0	1.0
Initial Q Delay (d3), s/veh	0.0	0.0	0.0	0.0	0.0	0.0	0.0	0.0
Control Delay (d), s/veh	0.0	12.8	0.0	17.7	0.0	16.5	0.0	15.6
1st-Term Q (Q1), veh/ln	0.0	0.1	0.0	4.1	0.0	0.1	0.0	8.3

2nd-Term Q (Q2), veh/ln	0.0	0.0	0.0	0.0	0.0	0.0	0.0	0.2
3rd-Term Q (Q3), veh/ln	0.0	0.0	0.0	0.0	0.0	0.0	0.0	0.0
%ile Back of Q Factor (f_B%)	0.00	1.00	0.00	1.00	0.00	1.00	0.00	1.00
%ile Back of Q (50%), veh/ln	0.0	0.1	0.0	4.2	0.0	0.1	0.0	8.5
%ile Storage Ratio (RQ%)	0.00	0.00	0.00	0.17	0.00	0.00	0.00	0.30
Initial Q (Qb), veh	0.0	0.0	0.0	0.0	0.0	0.0	0.0	0.0
Final (Residual) Q (Qe), veh	0.0	0.0	0.0	0.0	0.0	0.0	0.0	0.0
Sat Delay (ds), s/veh	0.0	0.0	0.0	0.0	0.0	0.0	0.0	0.0
Sat Q (Qs), veh	0.0	0.0	0.0	0.0	0.0	0.0	0.0	0.0
Sat Cap (cs), veh/h	0	0	0	0	0	0	0	0
Initial Q Clear Time (tc), h	0.0	0.0	0.0	0.0	0.0	0.0	0.0	0.0
Right Lane Group Data								
Assigned Mvmt	0	12	0	14	0	16	0	18
Lane Assignment		R		R		R		R
Lanes in Grp	0	1	0	1	0	1	0	1
Grp Vol (v), veh/h	0	49	0	84	0	11	0	57
Grp Sat Flow (s), veh/h/ln	0	1346	0	1442	0	1583	0	1404
Q Serve Time (g_s), s	0.0	1.6	0.0	2.8	0.0	0.3	0.0	1.6
Cycle Q Clear Time (g_c), s	0.0	1.6	0.0	2.8	0.0	0.3	0.0	1.6
Prot RT Sat Flow (s_R), veh/h/ln	0.0	0.0	0.0	0.0	0.0	0.0	0.0	0.0
Prot RT Eff Green (g_R), s	0.0	0.0	0.0	0.0	0.0	0.0	0.0	0.0
Prop RT Outside Lane (P_R)	0.00	1.00	0.00	1.00	0.00	1.00	0.00	1.00
Lane Grp Cap (c), veh/h	0	544	0	526	0	512	0	680
V/C Ratio (X)	0.00	0.09	0.00	0.16	0.00	0.02	0.00	0.08
Avail Cap (c_a), veh/h	0	544	0	623	0	512	0	842
Upstream Filter (I)	0.00	1.00	0.00	1.00	0.00	1.00	0.00	1.00
Uniform Delay (d1), s/veh	0.0	13.2	0.0	15.4	0.0	16.5	0.0	9.9
Incr Delay (d2), s/veh	0.0	0.3	0.0	0.1	0.0	0.0	0.0	0.1
Initial Q Delay (d3), s/veh	0.0	0.0	0.0	0.0	0.0	0.0	0.0	0.0
Control Delay (d), s/veh	0.0	13.5	0.0	15.5	0.0	16.5	0.0	10.0
1st-Term Q (Q1), veh/ln	0.0	0.6	0.0	1.1	0.0	0.1	0.0	0.6
2nd-Term Q (Q2), veh/ln	0.0	0.0	0.0	0.0	0.0	0.0	0.0	0.0
3rd-Term Q (Q3), veh/ln	0.0	0.0	0.0	0.0	0.0	0.0	0.0	0.0
%ile Back of Q Factor (f_B%)	0.00	1.00	0.00	1.00	0.00	1.00	0.00	1.00
%ile Back of Q (50%), veh/ln	0.0	0.6	0.0	1.1	0.0	0.1	0.0	0.6
%ile Storage Ratio (RQ%)	0.00	0.12	0.00	0.21	0.00	0.03	0.00	0.11
Initial Q (Qb), veh	0.0	0.0	0.0	0.0	0.0	0.0	0.0	0.0
Final (Residual) Q (Qe), veh	0.0	0.0	0.0	0.0	0.0	0.0	0.0	0.0
Sat Delay (ds), s/veh	0.0	0.0	0.0	0.0	0.0	0.0	0.0	0.0
Sat Q (Qs), veh	0.0	0.0	0.0	0.0	0.0	0.0	0.0	0.0
Sat Cap (cs), veh/h	0	0	0	0	0	0	0	0
Initial Q Clear Time (tc), h	0.0	0.0	0.0	0.0	0.0	0.0	0.0	0.0
Intersection Summary								
HCM 2010 Ctrl Delay		15.9						
HCM 2010 LOS		B						

Movement	EBL	EBT	EBR	WBL	WBT	WBR	NBL	NBT	NBR	SBL	SBT	SBR
Lane Configurations												
Traffic Volume (veh/h)	17	508	77	76	997	52	14	5	45	31	5	10
Future Volume (veh/h)	17	508	77	76	997	52	14	5	45	31	5	10
Number	7	4	14	3	8	18	5	2	12	1	6	16
Initial Q (Qb), veh	0	0	0	0	0	0	0	0	0	0	0	0
Ped-Bike Adj(A_pbT)	1.00		1.00	1.00		1.00	1.00		1.00	1.00		1.00
Parking Bus, Adj	1.00	1.00	1.00	1.00	1.00	1.00	1.00	1.00	1.00	1.00	1.00	1.00
Adj Sat Flow, veh/h/ln	1863	1696	1696	1652	1652	1652	1583	1583	1583	1863	1863	1863
Adj Flow Rate, veh/h	18	552	84	83	1084	57	15	5	49	34	5	11
Adj No. of Lanes	1	2	1	1	2	1	1	1	1	1	1	1
Peak Hour Factor	0.92	0.92	0.92	0.92	0.92	0.92	0.92	0.92	0.92	0.92	0.92	0.92
Percent Heavy Veh, %	2	12	12	15	15	15	20	20	20	2	2	2
Cap, veh/h	204	1177	526	353	1520	680	508	640	544	535	603	512
Arrive On Green	0.37	0.37	0.37	0.06	0.48	0.48	0.02	0.40	0.40	0.32	0.32	0.32
Sat Flow, veh/h	491	3223	1442	1573	3139	1404	1508	1583	1346	1345	1863	1583
Grp Volume(v), veh/h	18	552	84	83	1084	57	15	5	49	34	5	11
Grp Sat Flow(s),veh/h/ln	491	1612	1442	1573	1570	1404	1508	1583	1346	1345	1863	1583
Q Serve(g_s), s	2.2	9.4	2.8	2.2	19.5	1.6	0.5	0.1	1.6	1.3	0.1	0.3
Cycle Q Clear(g_c), s	13.1	9.4	2.8	2.2	19.5	1.6	0.5	0.1	1.6	1.3	0.1	0.3
Prop In Lane	1.00		1.00	1.00		1.00	1.00		1.00	1.00		1.00
Lane Grp Cap(c), veh/h	204	1177	526	353	1520	680	508	640	544	535	603	512
V/C Ratio(X)	0.09	0.47	0.16	0.24	0.71	0.08	0.03	0.01	0.09	0.06	0.01	0.02
Avail Cap(c_a), veh/h	237	1393	623	428	1882	842	597	640	544	535	603	512
HCM Platoon Ratio	1.00	1.00	1.00	1.00	1.00	1.00	1.00	1.00	1.00	1.00	1.00	1.00
Upstream Filter(I)	1.00	1.00	1.00	1.00	1.00	1.00	1.00	1.00	1.00	1.00	1.00	1.00
Uniform Delay (d), s/veh	23.1	17.4	15.4	12.5	14.6	9.9	14.4	12.8	13.2	16.8	16.5	16.5
Incr Delay (d2), s/veh	0.2	0.3	0.1	0.3	1.0	0.1	0.0	0.0	0.3	0.0	0.0	0.0
Initial Q Delay(d3),s/veh	0.0	0.0	0.0	0.0	0.0	0.0	0.0	0.0	0.0	0.0	0.0	0.0
%ile BackOfQ(50%),veh/ln	0.3	4.2	1.1	1.0	8.5	0.6	0.2	0.1	0.6	0.5	0.1	0.1
LnGrp Delay(d),s/veh	23.3	17.7	15.5	12.9	15.6	10.0	14.5	12.8	13.5	16.9	16.5	16.5
LnGrp LOS	C	B	B	B	B	A	B	B	B	B	B	B
Approach Vol, veh/h		654			1224			69			50	
Approach Delay, s/veh		17.6			15.1			13.7			16.8	
Approach LOS		B			B			B			B	

Timer	1	2	3	4	5	6	7	8
Assigned Phs		2	3	4	5	6		8
Phs Duration (G+Y+Rc), s		33.0	8.5	30.2	5.8	27.2		38.7
Change Period (Y+Rc), s		4.0	4.5	4.0	4.5	4.0		4.0
Max Green Setting (Gmax), s		29.0	7.5	31.0	5.5	19.0		43.0
Max Q Clear Time (g_c+I1), s		3.6	4.2	15.1	2.5	3.3		21.5
Green Ext Time (p_c), s		0.3	0.0	10.7	0.0	0.2		13.2

Intersection Summary	
HCM 2010 Ctrl Delay	15.9
HCM 2010 LOS	B

Lanes and Geometrics

3: Valencia Road/Ryan Airfield Drive & Ajo Highway

10/11/2016

Lane Group	EBL	EBT	EBR	WBL	WBT	WBR	NBL	NBT	NBR	SBL	SBT	SBR
Lane Configurations												
Ideal Flow (vphpl)	1900	1900	1900	1900	1900	1900	1900	1900	1900	1900	1900	1900
Lane Width (ft)	12	12	12	12	12	12	12	12	12	12	12	12
Grade (%)		0%			0%			0%			0%	
Storage Length (ft)	495		532	493		685	685		666	362		125
Storage Lanes	1		1	2		1	1		1	1		0
Taper Length (ft)	25			25			25			25		
Lane Util. Factor	1.00	0.95	1.00	0.97	0.95	1.00	1.00	1.00	1.00	1.00	1.00	1.00
Ped Bike Factor												
Frt			0.850			0.850			0.850		0.936	
Flt Protected				0.950			0.950			0.950		
Satd. Flow (prot)	1863	3539	1583	3433	3539	1583	1770	1863	1583	1770	1744	0
Flt Permitted				0.950			0.702					
Satd. Flow (perm)	1863	3539	1583	3433	3539	1583	1308	1863	1583	1863	1744	0
Right Turn on Red			Yes			Yes			Yes			Yes
Satd. Flow (RTOR)			384			117			597		3	
Link Speed (mph)		55			55			35			35	
Link Distance (ft)		731			847			1101			535	
Travel Time (s)		9.1			10.5			21.4			10.4	

Intersection Summary

Area Type: Other

Volume

3: Valencia Road/Ryan Airfield Drive & Ajo Highway

10/11/2016

Lane Group	EBL	EBT	EBR	WBL	WBT	WBR	NBL	NBT	NBR	SBL	SBT	SBR
Traffic Volume (vph)	0	702	353	802	831	3	426	0	499	4	4	3
Future Volume (vph)	0	702	353	802	831	3	426	0	499	4	4	3
Confl. Peds. (#/hr)												
Confl. Bikes (#/hr)												
Peak Hour Factor	0.92	0.92	0.92	0.92	0.92	0.92	0.92	0.92	0.92	0.92	0.92	0.92
Growth Factor	100%	100%	100%	100%	100%	100%	100%	100%	100%	100%	100%	100%
Heavy Vehicles (%)	2%	2%	2%	2%	2%	2%	2%	2%	2%	2%	2%	2%
Bus Blockages (#/hr)	0	0	0	0	0	0	0	0	0	0	0	0
Parking (#/hr)												
Mid-Block Traffic (%)		0%			0%			0%			0%	
Adj. Flow (vph)	0	763	384	872	903	3	463	0	542	4	4	3
Shared Lane Traffic (%)												
Lane Group Flow (vph)	0	763	384	872	903	3	463	0	542	4	7	0

Intersection Summary

Lane Group	EBT	EBR	WBL	WBT	WBR	NBL	NBR	SBL	SBT	ø7
Lane Configurations										
Traffic Volume (vph)	702	353	802	831	3	426	499	4	4	
Future Volume (vph)	702	353	802	831	3	426	499	4	4	
Turn Type	NA	Perm	Prot	NA	Perm	pm+pt	Perm	pm+pt	NA	
Protected Phases	4		3	8		5		1	6	7
Permitted Phases		4			8	2	2	6		
Detector Phase	4	4	3	8	8	5	2	1	6	
Switch Phase										
Minimum Initial (s)	4.0	4.0	5.0	4.0	4.0	5.0	4.0	5.0	4.0	5.0
Minimum Split (s)	20.0	20.0	9.5	20.0	20.0	9.5	20.0	9.5	20.0	9.5
Total Split (s)	39.0	39.0	45.0	74.5	74.5	36.0	46.5	9.5	20.0	9.5
Total Split (%)	27.9%	27.9%	32.1%	53.2%	53.2%	25.7%	33.2%	6.8%	14.3%	7%
Yellow Time (s)	3.5	3.5	3.5	3.5	3.5	3.5	3.5	3.5	3.5	3.5
All-Red Time (s)	1.0	1.0	1.0	1.0	1.0	1.0	1.0	1.0	1.0	1.0
Lost Time Adjust (s)	0.0	0.0	0.0	0.0	0.0	0.0	0.0	0.0	0.0	
Total Lost Time (s)	4.5	4.5	4.5	4.5	4.5	4.5	4.5	4.5	4.5	
Lead/Lag	Lag	Lag	Lead	Lag	Lag	Lead	Lag	Lead	Lag	Lead
Lead-Lag Optimize?										
Recall Mode	None	None	None	None	None	None	Min	None	None	None
Act Effct Green (s)	31.1	31.1	34.0	69.7	69.7	32.1	30.5	6.3	6.0	
Actuated g/C Ratio	0.28	0.28	0.31	0.63	0.63	0.29	0.27	0.06	0.05	
v/c Ratio	0.77	0.53	0.83	0.41	0.00	0.92	0.62	0.04	0.07	
Control Delay	44.0	6.6	44.5	11.3	0.0	64.1	5.1	43.5	47.3	
Queue Delay	0.0	0.0	0.0	0.0	0.0	0.0	0.0	0.0	0.0	
Total Delay	44.0	6.6	44.5	11.3	0.0	64.1	5.1	43.5	47.3	
LOS	D	A	D	B	A	E	A	D	D	
Approach Delay	31.5			27.6					45.9	
Approach LOS	C			C					D	

Intersection Summary	
Cycle Length: 140	
Actuated Cycle Length: 111	
Natural Cycle: 90	
Control Type: Actuated-Uncoordinated	
Maximum v/c Ratio: 0.92	
Intersection Signal Delay: 30.0	Intersection LOS: C
Intersection Capacity Utilization 83.8%	ICU Level of Service E
Analysis Period (min) 15	

Splits and Phases: 3: Valencia Road/Ryan Airfield Drive & Ajo Highway

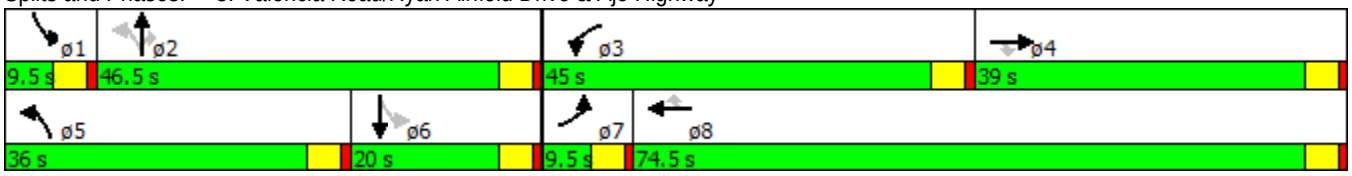

Phasings
3: Valencia Road/Ryan Airfield Drive & Ajo Highway

10/11/2016

Lane Group	EBT	EBR	WBL	WBT	WBR	NBL	NBR	SBL	SBT	ø7
Protected Phases	4		3	8		5		1	6	7
Permitted Phases		4			8	2	2	6		
Minimum Initial (s)	4.0	4.0	5.0	4.0	4.0	5.0	4.0	5.0	4.0	5.0
Minimum Split (s)	20.0	20.0	9.5	20.0	20.0	9.5	20.0	9.5	20.0	9.5
Total Split (s)	39.0	39.0	45.0	74.5	74.5	36.0	46.5	9.5	20.0	9.5
Total Split (%)	27.9%	27.9%	32.1%	53.2%	53.2%	25.7%	33.2%	6.8%	14.3%	7%
Maximum Green (s)	34.5	34.5	40.5	70.0	70.0	31.5	42.0	5.0	15.5	5.0
Yellow Time (s)	3.5	3.5	3.5	3.5	3.5	3.5	3.5	3.5	3.5	3.5
All-Red Time (s)	1.0	1.0	1.0	1.0	1.0	1.0	1.0	1.0	1.0	1.0
Lead/Lag	Lag	Lag	Lead	Lag	Lag	Lead	Lag	Lead	Lag	Lead
Lead-Lag Optimize?										
Vehicle Extension (s)	3.0	3.0	3.0	3.0	3.0	3.0	3.0	3.0	3.0	3.0
Minimum Gap (s)	3.0	3.0	3.0	3.0	3.0	3.0	3.0	3.0	3.0	3.0
Time Before Reduce (s)	0.0	0.0	0.0	0.0	0.0	0.0	0.0	0.0	0.0	0.0
Time To Reduce (s)	0.0	0.0	0.0	0.0	0.0	0.0	0.0	0.0	0.0	0.0
Recall Mode	None	None	None	None	None	None	Min	None	None	None
Walk Time (s)										
Flash Dont Walk (s)										
Pedestrian Calls (#/hr)										
90th %ile Green (s)	34.5	34.5	40.5	79.5	79.5	31.5	33.5	5.0	7.0	0.0
90th %ile Term Code	Max	Max	Max	Hold	Hold	Max	Hold	Max	Gap	Skip
70th %ile Green (s)	34.5	34.5	38.9	77.9	77.9	31.5	31.5	0.0	0.0	0.0
70th %ile Term Code	Max	Max	Gap	Hold	Hold	Max	Hold	Skip	Skip	Skip
50th %ile Green (s)	33.5	33.5	35.3	73.3	73.3	31.5	31.5	0.0	0.0	0.0
50th %ile Term Code	Gap	Gap	Gap	Hold	Hold	Max	Hold	Skip	Skip	Skip
30th %ile Green (s)	30.0	30.0	32.0	66.5	66.5	31.5	31.5	0.0	0.0	0.0
30th %ile Term Code	Gap	Gap	Gap	Hold	Hold	Max	Hold	Skip	Skip	Skip
10th %ile Green (s)	22.9	22.9	24.1	51.5	51.5	23.9	23.9	0.0	0.0	0.0
10th %ile Term Code	Gap	Gap	Gap	Hold	Hold	Gap	Hold	Skip	Skip	Skip

Intersection Summary
Cycle Length: 140
Actuated Cycle Length: 111
Control Type: Actuated-Uncoordinated
90th %ile Actuated Cycle: 131.5
70th %ile Actuated Cycle: 118.4
50th %ile Actuated Cycle: 113.8
30th %ile Actuated Cycle: 107
10th %ile Actuated Cycle: 84.4

Lane Group	EBT	EBR	WBL	WBT	WBR	NBL	NBR	SBL	SBT
Lane Group Flow (vph)	763	384	872	903	3	463	542	4	7
v/c Ratio	0.77	0.53	0.83	0.41	0.00	0.92	0.62	0.04	0.07
Control Delay	44.0	6.6	44.5	11.3	0.0	64.1	5.1	43.5	47.3
Queue Delay	0.0	0.0	0.0	0.0	0.0	0.0	0.0	0.0	0.0
Total Delay	44.0	6.6	44.5	11.3	0.0	64.1	5.1	43.5	47.3
Queue Length 50th (ft)	264	0	303	153	0	332	0	3	3
Queue Length 95th (ft)	402	82	437	250	0	#556	48	11	20
Internal Link Dist (ft)	651			767					455
Turn Bay Length (ft)		532	493		685	685	666	362	
Base Capacity (vph)	1124	764	1280	2399	1111	536	978	101	251
Starvation Cap Reductn	0	0	0	0	0	0	0	0	0
Spillback Cap Reductn	0	0	0	0	0	0	0	0	0
Storage Cap Reductn	0	0	0	0	0	0	0	0	0
Reduced v/c Ratio	0.68	0.50	0.68	0.38	0.00	0.86	0.55	0.04	0.03

Intersection Summary

95th percentile volume exceeds capacity, queue may be longer.
Queue shown is maximum after two cycles.

Lanes and Geometrics
3: Valencia Road/Ryan Airfield Drive & Ajo Highway

10/11/2016

Lane Group	EBL	EBT	EBR	WBL	WBT	WBR	NBL	NBT	NBR	SBL	SBT	SBR
Lane Configurations												
Ideal Flow (vphpl)	1900	1900	1900	1900	1900	1900	1900	1900	1900	1900	1900	1900
Lane Width (ft)	12	12	12	12	12	12	12	12	12	12	12	12
Grade (%)		0%			0%			0%			0%	
Storage Length (ft)	495		532	493		493	685		666	362		125
Storage Lanes	1		1	2		1	1		1	1		0
Taper Length (ft)	25			25			25			25		
Lane Util. Factor	1.00	0.95	1.00	0.97	0.95	1.00	1.00	1.00	1.00	1.00	1.00	1.00
Ped Bike Factor												
Frt			0.850			0.850			0.850		0.936	
Flt Protected				0.950			0.950			0.950		
Satd. Flow (prot)	1863	3362	1583	3433	3539	1583	1770	1863	1583	1770	1744	0
Flt Permitted				0.950			0.471			0.754		
Satd. Flow (perm)	1863	3362	1583	3433	3539	1583	877	1863	1583	1405	1744	0
Right Turn on Red			Yes			Yes			Yes			Yes
Satd. Flow (RTOR)			325			113			372		3	
Link Speed (mph)		55			55			35			35	
Link Distance (ft)		731			847			966			535	
Travel Time (s)		9.1			10.5			18.8			10.4	

Intersection Summary	
Area Type:	Other

3: Valencia Road/Ryan Airfield Drive & Ajo Highway

10/11/2016

Lane Group	EBL	EBT	EBR	WBL	WBT	WBR	NBL	NBT	NBR	SBL	SBT	SBR
Traffic Volume (vph)	0	816	299	350	384	7	238	5	547	1	4	3
Future Volume (vph)	0	816	299	350	384	7	238	5	547	1	4	3
Confl. Peds. (#/hr)												
Confl. Bikes (#/hr)												
Peak Hour Factor	0.92	0.92	0.92	0.92	0.92	0.92	0.92	0.92	0.92	0.92	0.92	0.92
Growth Factor	100%	100%	100%	100%	100%	100%	100%	100%	100%	100%	100%	100%
Heavy Vehicles (%)	2%	2%	2%	2%	2%	2%	2%	2%	2%	2%	2%	2%
Bus Blockages (#/hr)	0	0	0	0	0	0	0	0	0	0	0	0
Parking (#/hr)		0										
Mid-Block Traffic (%)		0%			0%			0%			0%	
Adj. Flow (vph)	0	887	325	380	417	8	259	5	595	1	4	3
Shared Lane Traffic (%)												
Lane Group Flow (vph)	0	887	325	380	417	8	259	5	595	1	7	0

Intersection Summary

Lane Group	EBT	EBR	WBL	WBT	WBR	NBL	NBT	NBR	SBL	SBT	ø7
Lane Configurations											
Traffic Volume (vph)	816	299	350	384	7	238	5	547	1	4	
Future Volume (vph)	816	299	350	384	7	238	5	547	1	4	
Turn Type	NA	Perm	Prot	NA	Perm	pm+pt	NA	Perm	pm+pt	NA	
Protected Phases	4		3	8		5	2		1	6	7
Permitted Phases		4			8	2		2	6		
Detector Phase	4	4	3	8	8	5	2	2	1	6	
Switch Phase											
Minimum Initial (s)	4.0	4.0	5.0	4.0	4.0	5.0	4.0	4.0	5.0	4.0	5.0
Minimum Split (s)	20.0	20.0	9.5	20.0	20.0	9.5	20.0	20.0	9.5	20.0	9.5
Total Split (s)	50.0	50.0	26.0	66.5	66.5	19.4	54.5	54.5	9.5	44.6	9.5
Total Split (%)	35.7%	35.7%	18.6%	47.5%	47.5%	13.9%	38.9%	38.9%	6.8%	31.9%	7%
Yellow Time (s)	3.5	3.5	3.5	3.5	3.5	3.5	3.5	3.5	3.5	3.5	3.5
All-Red Time (s)	0.5	0.5	1.0	0.5	0.5	1.0	0.5	0.5	1.0	0.5	1.0
Lost Time Adjust (s)	0.0	0.0	0.0	0.0	0.0	0.0	0.0	0.0	0.0	0.0	
Total Lost Time (s)	4.0	4.0	4.5	4.0	4.0	4.5	4.0	4.0	4.5	4.0	
Lead/Lag	Lag	Lag	Lead	Lag	Lag	Lead	Lag	Lag	Lead	Lag	Lead
Lead-Lag Optimize?						Yes				Yes	
Recall Mode	None	None	None	None	None	None	Max	Max	None	None	None
Act Effct Green (s)	38.8	38.8	18.2	61.5	61.5	52.2	51.0	51.0	12.1	11.9	
Actuated g/C Ratio	0.32	0.32	0.15	0.50	0.50	0.43	0.42	0.42	0.10	0.10	
v/c Ratio	0.83	0.45	0.74	0.23	0.01	0.37	0.01	0.68	0.01	0.04	
Control Delay	46.9	5.4	60.5	17.4	0.0	27.3	26.4	16.0	38.0	36.5	
Queue Delay	0.0	0.0	0.0	0.0	0.0	0.0	0.0	0.0	0.0	0.0	
Total Delay	46.9	5.4	60.5	17.4	0.0	27.3	26.4	16.0	38.0	36.5	
LOS	D	A	E	B	A	C	C	B	D	D	
Approach Delay	35.8			37.5			19.5			36.7	
Approach LOS	D			D			B			D	

Intersection Summary

Cycle Length: 140
Actuated Cycle Length: 122.3
Natural Cycle: 70
Control Type: Semi Act-Uncoord
Maximum v/c Ratio: 0.83
Intersection Signal Delay: 31.4 Intersection LOS: C
Intersection Capacity Utilization 69.8% ICU Level of Service C
Analysis Period (min) 15

Splits and Phases: 3: Valencia Road/Ryan Airfield Drive & Ajo Highway

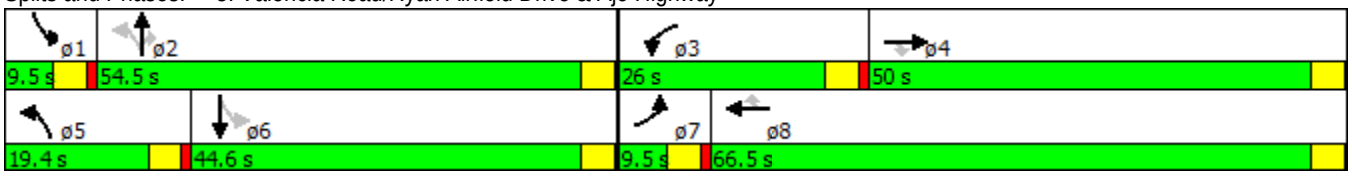

Phasings
3: Valencia Road/Ryan Airfield Drive & Ajo Highway

10/11/2016

Lane Group	EBT	EBR	WBL	WBT	WBR	NBL	NBT	NBR	SBL	SBT	ø7
Protected Phases	4		3	8		5	2		1	6	7
Permitted Phases		4			8	2		2	6		
Minimum Initial (s)	4.0	4.0	5.0	4.0	4.0	5.0	4.0	4.0	5.0	4.0	5.0
Minimum Split (s)	20.0	20.0	9.5	20.0	20.0	9.5	20.0	20.0	9.5	20.0	9.5
Total Split (s)	50.0	50.0	26.0	66.5	66.5	19.4	54.5	54.5	9.5	44.6	9.5
Total Split (%)	35.7%	35.7%	18.6%	47.5%	47.5%	13.9%	38.9%	38.9%	6.8%	31.9%	7%
Maximum Green (s)	46.0	46.0	21.5	62.5	62.5	14.9	50.5	50.5	5.0	40.6	5.0
Yellow Time (s)	3.5	3.5	3.5	3.5	3.5	3.5	3.5	3.5	3.5	3.5	3.5
All-Red Time (s)	0.5	0.5	1.0	0.5	0.5	1.0	0.5	0.5	1.0	0.5	1.0
Lead/Lag	Lag	Lag	Lead	Lag	Lag	Lead	Lag	Lag	Lead	Lag	Lead
Lead-Lag Optimize?						Yes				Yes	
Vehicle Extension (s)	3.0	3.0	3.0	3.0	3.0	3.0	3.0	3.0	3.0	3.0	3.0
Minimum Gap (s)	3.0	3.0	3.0	3.0	3.0	3.0	3.0	3.0	3.0	3.0	3.0
Time Before Reduce (s)	0.0	0.0	0.0	0.0	0.0	0.0	0.0	0.0	0.0	0.0	0.0
Time To Reduce (s)	0.0	0.0	0.0	0.0	0.0	0.0	0.0	0.0	0.0	0.0	0.0
Recall Mode	None	None	None	None	None	None	Max	Max	None	None	None
Walk Time (s)											
Flash Dont Walk (s)											
Pedestrian Calls (#/hr)											
90th %ile Green (s)	46.0	46.0	21.5	72.0	72.0	14.9	50.5	50.5	5.0	40.6	0.0
90th %ile Term Code	Max	Max	Max	Hold	Hold	Max	MaxR	MaxR	Max	Hold	Skip
70th %ile Green (s)	45.5	45.5	21.5	71.5	71.5	50.0	50.5	50.5	0.0	0.0	0.0
70th %ile Term Code	Gap	Gap	Max	Hold	Hold	Hold	MaxR	MaxR	Skip	Skip	Skip
50th %ile Green (s)	40.3	40.3	19.1	63.9	63.9	50.0	50.5	50.5	0.0	0.0	0.0
50th %ile Term Code	Gap	Gap	Gap	Hold	Hold	Hold	MaxR	MaxR	Skip	Skip	Skip
30th %ile Green (s)	34.9	34.9	16.5	55.9	55.9	50.0	50.5	50.5	0.0	0.0	0.0
30th %ile Term Code	Gap	Gap	Gap	Hold	Hold	Hold	MaxR	MaxR	Skip	Skip	Skip
10th %ile Green (s)	28.4	28.4	13.2	46.1	46.1	50.0	50.5	50.5	0.0	0.0	0.0
10th %ile Term Code	Gap	Gap	Gap	Hold	Hold	Hold	MaxR	MaxR	Skip	Skip	Skip

Intersection Summary
Cycle Length: 140
Actuated Cycle Length: 122.3
Control Type: Semi Act-Uncoord
90th %ile Actuated Cycle: 140
70th %ile Actuated Cycle: 130
50th %ile Actuated Cycle: 122.4
30th %ile Actuated Cycle: 114.4
10th %ile Actuated Cycle: 104.6

Lane Group	EBT	EBR	WBL	WBT	WBR	NBL	NBT	NBR	SBL	SBT
Lane Group Flow (vph)	887	325	380	417	8	259	5	595	1	7
v/c Ratio	0.83	0.45	0.74	0.23	0.01	0.37	0.01	0.68	0.01	0.04
Control Delay	46.9	5.4	60.5	17.4	0.0	27.3	26.4	16.0	38.0	36.5
Queue Delay	0.0	0.0	0.0	0.0	0.0	0.0	0.0	0.0	0.0	0.0
Total Delay	46.9	5.4	60.5	17.4	0.0	27.3	26.4	16.0	38.0	36.5
Queue Length 50th (ft)	335	0	148	90	0	140	2	139	1	3
Queue Length 95th (ft)	472	68	229	141	0	229	13	339	4	15
Internal Link Dist (ft)	651			767			886			455
Turn Bay Length (ft)		532	493		493	685		666	362	
Base Capacity (vph)	1277	803	609	1932	915	698	777	877	153	586
Starvation Cap Reductn	0	0	0	0	0	0	0	0	0	0
Spillback Cap Reductn	0	0	0	0	0	0	0	0	0	0
Storage Cap Reductn	0	0	0	0	0	0	0	0	0	0
Reduced v/c Ratio	0.69	0.40	0.62	0.22	0.01	0.37	0.01	0.68	0.01	0.01

Intersection Summary

Intersection	
Int Delay, s/veh	2.4

Movement	EBL	EBT	WBT	WBR	SBL	SBR
Traffic Vol, veh/h	7	958	353	46	108	10
Future Vol, veh/h	7	958	353	46	108	10
Conflicting Peds, #/hr	0	0	0	0	0	0
Sign Control	Free	Free	Free	Free	Stop	Stop
RT Channelized	-	None	-	None	-	None
Storage Length	150	-	-	-	-	-
Veh in Median Storage, #	-	0	0	-	0	-
Grade, %	-	0	0	-	0	-
Peak Hour Factor	92	92	92	92	92	92
Heavy Vehicles, %	2	12	15	15	2	2
Mvmt Flow	8	1041	384	50	117	11

Major/Minor	Major1		Major2		Minor2	
Conflicting Flow All	434	0	-	0	945	217
Stage 1	-	-	-	-	409	-
Stage 2	-	-	-	-	536	-
Critical Hdwy	4.14	-	-	-	6.84	6.94
Critical Hdwy Stg 1	-	-	-	-	5.84	-
Critical Hdwy Stg 2	-	-	-	-	5.84	-
Follow-up Hdwy	2.22	-	-	-	3.52	3.32
Pot Cap-1 Maneuver	1122	-	-	-	260	787
Stage 1	-	-	-	-	639	-
Stage 2	-	-	-	-	551	-
Platoon blocked, %		-	-	-		
Mov Cap-1 Maneuver	1122	-	-	-	258	787
Mov Cap-2 Maneuver	-	-	-	-	258	-
Stage 1	-	-	-	-	639	-
Stage 2	-	-	-	-	547	-

Approach	EB	WB	SB
HCM Control Delay, s	0.1	0	29.2
HCM LOS			D

Minor Lane/Major Mvmt	EBL	EBT	WBT	WBR	SBLn1
Capacity (veh/h)	1122	-	-	-	274
HCM Lane V/C Ratio	0.007	-	-	-	0.468
HCM Control Delay (s)	8.2	-	-	-	29.2
HCM Lane LOS	A	-	-	-	D
HCM 95th %tile Q(veh)	0	-	-	-	2.3

Intersection	
Int Delay, s/veh	1.4

Movement	EBL	EBT	WBT	WBR	SBL	SBR
Traffic Vol, veh/h	28	509	876	198	39	4
Future Vol, veh/h	28	509	876	198	39	4
Conflicting Peds, #/hr	0	0	0	0	0	0
Sign Control	Free	Free	Free	Free	Stop	Stop
RT Channelized	-	None	-	None	-	None
Storage Length	150	-	-	-	-	-
Veh in Median Storage, #	-	0	0	-	0	-
Grade, %	-	0	0	-	0	-
Peak Hour Factor	92	92	92	92	92	92
Heavy Vehicles, %	2	12	15	15	2	2
Mvmt Flow	30	553	952	215	42	4

Major/Minor	Major1		Major2		Minor2	
Conflicting Flow All	1167	0	-	0	1398	584
Stage 1	-	-	-	-	1060	-
Stage 2	-	-	-	-	338	-
Critical Hdwy	4.14	-	-	-	6.84	6.94
Critical Hdwy Stg 1	-	-	-	-	5.84	-
Critical Hdwy Stg 2	-	-	-	-	5.84	-
Follow-up Hdwy	2.22	-	-	-	3.52	3.32
Pot Cap-1 Maneuver	594	-	-	-	132	455
Stage 1	-	-	-	-	294	-
Stage 2	-	-	-	-	694	-
Platoon blocked, %		-	-	-		
Mov Cap-1 Maneuver	594	-	-	-	125	455
Mov Cap-2 Maneuver	-	-	-	-	125	-
Stage 1	-	-	-	-	294	-
Stage 2	-	-	-	-	659	-

Approach	EB	WB	SB
HCM Control Delay, s	0.6	0	45.6
HCM LOS			E

Minor Lane/Major Mvmt	EBL	EBT	WBT	WBR	SBLn1
Capacity (veh/h)	594	-	-	-	134
HCM Lane V/C Ratio	0.051	-	-	-	0.349
HCM Control Delay (s)	11.4	-	-	-	45.6
HCM Lane LOS	B	-	-	-	E
HCM 95th %tile Q(veh)	0.2	-	-	-	1.4

Movement	EBL	EBT	EBR	WBL	WBT	WBR	NBL	NBT	NBR	SBL	SBT	SBR
Lane Configurations												
Traffic Volume (veh/h)	7	1265	11	42	456	53	0	2	71	5	2	96
Future Volume (veh/h)	7	1265	11	42	456	53	0	2	71	5	2	96
Number	7	4	14	3	8	18	5	2	12	1	6	16
Initial Q, veh	0	0	0	0	0	0	0	0	0	0	0	0
Ped-Bike Adj (A_pbT)	1.00		1.00	1.00		1.00	1.00		1.00	1.00		1.00
Parking Bus Adj	1.00	1.00	1.00	1.00	1.00	1.00	1.00	1.00	1.00	1.00	1.00	1.00
Adj Sat Flow, veh/h/ln	1863	1696	1900	1652	1652	1900	1583	1583	1900	1863	1863	1900
Adj Flow Rate, veh/h	8	1375	12	46	496	58	0	2	77	5	2	104
Adj No. of Lanes	1	2	0	1	2	0	1	1	0	1	1	0
Peak Hour Factor	0.92	0.92	0.92	0.92	0.92	0.92	0.92	0.92	0.92	0.92	0.92	0.92
Percent Heavy Veh, %	2	12	12	15	15	15	20	20	20	2	2	2
Opposing Right Turn Influence	Yes			Yes			Yes			Yes		
Cap, veh/h	514	1799	16	218	1636	191	316	7	282	310	8	423
HCM Platoon Ratio	1.00	1.00	1.00	1.00	1.00	1.00	1.00	1.00	1.00	1.00	1.00	1.00
Prop Arrive On Green	0.01	0.55	0.55	0.04	0.58	0.58	0.00	0.21	0.21	0.01	0.27	0.27
Ln Grp Delay, s/veh	8.8	17.9	17.8	13.7	9.8	9.8	0.0	0.0	31.4	25.7	0.0	25.5
Ln Grp LOS	A	B	B	B	A	A			C	C		C
Approach Vol, veh/h		1395			600			79			111	
Approach Delay, s/veh		17.8			10.1			31.4			25.5	
Approach LOS		B			B			C			C	

Timer:	1	2	3	4	5	6	7	8
Assigned Phs	1	2	3	4	5	6	7	8
Case No	1.1	4.0	1.1	4.0	1.1	4.0	1.1	4.0
Phs Duration (G+Y+Rc), s	5.1	23.0	7.9	52.7	0.0	28.1	5.4	55.2
Change Period (Y+Rc), s	4.5	4.0	4.5	4.0	4.5	4.0	4.5	4.0
Max Green (Gmax), s	5.1	19.0	6.9	62.0	5.0	19.1	5.5	63.4
Max Allow Headway (MAH), s	3.8	5.6	3.9	5.3	0.0	5.6	3.8	5.3
Max Q Clear (g_c+l1), s	2.2	6.3	3.1	30.9	0.0	6.6	2.2	10.0
Green Ext Time (g_e), s	0.0	0.8	0.0	17.8	0.0	0.8	0.0	23.0
Prob of Phs Call (p_c)	0.12	1.00	0.68	1.00	0.00	0.99	0.18	1.00
Prob of Max Out (p_x)	1.00	0.00	1.00	0.49	0.00	0.04	1.00	0.27

Left-Turn Movement Data				
Assigned Mvmt	1	3	5	7
Mvmt Sat Flow, veh/h	1774	1573	1508	1774

Through Movement Data				
Assigned Mvmt	2	4	6	8
Mvmt Sat Flow, veh/h	34	3274	30	2833

Right-Turn Movement Data				
Assigned Mvmt	12	14	16	18
Mvmt Sat Flow, veh/h	1317	29	1558	330

Left Lane Group Data								
Assigned Mvmt	1	0	3	0	5	0	7	0
Lane Assignment	(Pr/Pm)		(Pr/Pm)		(Pr/Pm)		(Pr/Pm)	

Lanes in Grp	1	0	1	0	1	0	1	0
Grp Vol (v), veh/h	5	0	46	0	0	0	8	0
Grp Sat Flow (s), veh/h/ln	1774	0	1573	0	1508	0	1774	0
Q Serve Time (g_s), s	0.2	0.0	1.1	0.0	0.0	0.0	0.2	0.0
Cycle Q Clear Time (g_c), s	0.2	0.0	1.1	0.0	0.0	0.0	0.2	0.0
Perm LT Sat Flow (s_l), veh/h/ln	1314	0	345	0	1090	0	851	0
Shared LT Sat Flow (s_sh), veh/h/ln	0	0	0	0	0	0	0	0
Perm LT Eff Green (g_p), s	21.0	0.0	48.7	0.0	19.0	0.0	48.7	0.0
Perm LT Serve Time (g_u), s	14.7	0.0	19.8	0.0	19.0	0.0	43.2	0.0
Perm LT Q Serve Time (g_ps), s	0.0	0.0	4.5	0.0	0.0	0.0	0.1	0.0
Time to First Blk (g_f), s	0.0	0.0	0.0	0.0	0.0	0.0	0.0	0.0
Serve Time pre Blk (g_fs), s	0.0	0.0	0.0	0.0	0.0	0.0	0.0	0.0
Prop LT Inside Lane (P_L)	1.00	0.00	1.00	0.00	1.00	0.00	1.00	0.00
Lane Grp Cap (c), veh/h	310	0	218	0	316	0	514	0
V/C Ratio (X)	0.02	0.00	0.21	0.00	0.00	0.00	0.02	0.00
Avail Cap (c_a), veh/h	401	0	280	0	400	0	606	0
Upstream Filter (I)	1.00	0.00	1.00	0.00	0.00	0.00	1.00	0.00
Uniform Delay (d1), s/veh	25.7	0.0	13.2	0.0	0.0	0.0	8.8	0.0
Incr Delay (d2), s/veh	0.0	0.0	0.5	0.0	0.0	0.0	0.0	0.0
Initial Q Delay (d3), s/veh	0.0	0.0	0.0	0.0	0.0	0.0	0.0	0.0
Control Delay (d), s/veh	25.7	0.0	13.7	0.0	0.0	0.0	8.8	0.0
1st-Term Q (Q1), veh/ln	0.1	0.0	0.5	0.0	0.0	0.0	0.1	0.0
2nd-Term Q (Q2), veh/ln	0.0	0.0	0.0	0.0	0.0	0.0	0.0	0.0
3rd-Term Q (Q3), veh/ln	0.0	0.0	0.0	0.0	0.0	0.0	0.0	0.0
%ile Back of Q Factor (f_B%)	1.00	0.00	1.00	0.00	1.00	0.00	1.00	0.00
%ile Back of Q (50%), veh/ln	0.1	0.0	0.5	0.0	0.0	0.0	0.1	0.0
%ile Storage Ratio (RQ%)	0.02	0.00	0.09	0.00	0.00	0.00	0.01	0.00
Initial Q (Qb), veh	0.0	0.0	0.0	0.0	0.0	0.0	0.0	0.0
Final (Residual) Q (Qe), veh	0.0	0.0	0.0	0.0	0.0	0.0	0.0	0.0
Sat Delay (ds), s/veh	0.0	0.0	0.0	0.0	0.0	0.0	0.0	0.0
Sat Q (Qs), veh	0.0	0.0	0.0	0.0	0.0	0.0	0.0	0.0
Sat Cap (cs), veh/h	0	0	0	0	0	0	0	0
Initial Q Clear Time (tc), h	0.0	0.0	0.0	0.0	0.0	0.0	0.0	0.0
Middle Lane Group Data								
Assigned Mvmt	0	2	0	4	0	6	0	8
Lane Assignment				T				T
Lanes in Grp	0	0	0	1	0	0	0	1
Grp Vol (v), veh/h	0	0	0	677	0	0	0	274
Grp Sat Flow (s), veh/h/ln	0	0	0	1612	0	0	0	1570
Q Serve Time (g_s), s	0.0	0.0	0.0	28.9	0.0	0.0	0.0	7.9
Cycle Q Clear Time (g_c), s	0.0	0.0	0.0	28.9	0.0	0.0	0.0	7.9
Lane Grp Cap (c), veh/h	0	0	0	885	0	0	0	906
V/C Ratio (X)	0.00	0.00	0.00	0.76	0.00	0.00	0.00	0.30
Avail Cap (c_a), veh/h	0	0	0	1127	0	0	0	1122
Upstream Filter (I)	0.00	0.00	0.00	1.00	0.00	0.00	0.00	1.00
Uniform Delay (d1), s/veh	0.0	0.0	0.0	15.5	0.0	0.0	0.0	9.6
Incr Delay (d2), s/veh	0.0	0.0	0.0	2.4	0.0	0.0	0.0	0.2
Initial Q Delay (d3), s/veh	0.0	0.0	0.0	0.0	0.0	0.0	0.0	0.0
Control Delay (d), s/veh	0.0	0.0	0.0	17.9	0.0	0.0	0.0	9.8
1st-Term Q (Q1), veh/ln	0.0	0.0	0.0	12.8	0.0	0.0	0.0	3.4

2nd-Term Q (Q2), veh/ln	0.0	0.0	0.0	0.6	0.0	0.0	0.0	0.0
3rd-Term Q (Q3), veh/ln	0.0	0.0	0.0	0.0	0.0	0.0	0.0	0.0
%ile Back of Q Factor (f_B%)	0.00	1.00	0.00	1.00	0.00	1.00	0.00	1.00
%ile Back of Q (50%), veh/ln	0.0	0.0	0.0	13.4	0.0	0.0	0.0	3.5
%ile Storage Ratio (RQ%)	0.00	0.00	0.00	0.53	0.00	0.00	0.00	0.12
Initial Q (Qb), veh	0.0	0.0	0.0	0.0	0.0	0.0	0.0	0.0
Final (Residual) Q (Qe), veh	0.0	0.0	0.0	0.0	0.0	0.0	0.0	0.0
Sat Delay (ds), s/veh	0.0	0.0	0.0	0.0	0.0	0.0	0.0	0.0
Sat Q (Qs), veh	0.0	0.0	0.0	0.0	0.0	0.0	0.0	0.0
Sat Cap (cs), veh/h	0	0	0	0	0	0	0	0
Initial Q Clear Time (tc), h	0.0	0.0	0.0	0.0	0.0	0.0	0.0	0.0
Right Lane Group Data								
Assigned Mvmt	0	12	0	14	0	16	0	18
Lane Assignment		T+R		T+R		T+R		T+R
Lanes in Grp	0	1	0	1	0	1	0	1
Grp Vol (v), veh/h	0	79	0	710	0	106	0	280
Grp Sat Flow (s), veh/h/ln	0	1351	0	1691	0	1588	0	1594
Q Serve Time (g_s), s	0.0	4.3	0.0	28.9	0.0	4.6	0.0	8.0
Cycle Q Clear Time (g_c), s	0.0	4.3	0.0	28.9	0.0	4.6	0.0	8.0
Prot RT Sat Flow (s_R), veh/h/ln	0.0	0.0	0.0	0.0	0.0	0.0	0.0	0.0
Prot RT Eff Green (g_R), s	0.0	0.0	0.0	0.0	0.0	0.0	0.0	0.0
Prop RT Outside Lane (P_R)	0.00	0.97	0.00	0.02	0.00	0.98	0.00	0.21
Lane Grp Cap (c), veh/h	0	289	0	929	0	431	0	920
V/C Ratio (X)	0.00	0.27	0.00	0.76	0.00	0.25	0.00	0.30
Avail Cap (c_a), veh/h	0	289	0	1182	0	431	0	1139
Upstream Filter (I)	0.00	1.00	0.00	1.00	0.00	1.00	0.00	1.00
Uniform Delay (d1), s/veh	0.0	29.1	0.0	15.5	0.0	25.2	0.0	9.6
Incr Delay (d2), s/veh	0.0	2.3	0.0	2.3	0.0	0.3	0.0	0.2
Initial Q Delay (d3), s/veh	0.0	0.0	0.0	0.0	0.0	0.0	0.0	0.0
Control Delay (d), s/veh	0.0	31.4	0.0	17.8	0.0	25.5	0.0	9.8
1st-Term Q (Q1), veh/ln	0.0	1.6	0.0	13.4	0.0	2.0	0.0	3.5
2nd-Term Q (Q2), veh/ln	0.0	0.2	0.0	0.6	0.0	0.0	0.0	0.0
3rd-Term Q (Q3), veh/ln	0.0	0.0	0.0	0.0	0.0	0.0	0.0	0.0
%ile Back of Q Factor (f_B%)	0.00	1.00	0.00	1.00	0.00	1.00	0.00	1.00
%ile Back of Q (50%), veh/ln	0.0	1.8	0.0	14.0	0.0	2.1	0.0	3.5
%ile Storage Ratio (RQ%)	0.00	0.09	0.00	0.55	0.00	0.11	0.00	0.12
Initial Q (Qb), veh	0.0	0.0	0.0	0.0	0.0	0.0	0.0	0.0
Final (Residual) Q (Qe), veh	0.0	0.0	0.0	0.0	0.0	0.0	0.0	0.0
Sat Delay (ds), s/veh	0.0	0.0	0.0	0.0	0.0	0.0	0.0	0.0
Sat Q (Qs), veh	0.0	0.0	0.0	0.0	0.0	0.0	0.0	0.0
Sat Cap (cs), veh/h	0	0	0	0	0	0	0	0
Initial Q Clear Time (tc), h	0.0	0.0	0.0	0.0	0.0	0.0	0.0	0.0
Intersection Summary								
HCM 2010 Ctrl Delay		16.6						
HCM 2010 LOS		B						

Movement	EBL	EBT	EBR	WBL	WBT	WBR	NBL	NBT	NBR	SBL	SBT	SBR
Lane Configurations												
Traffic Volume (veh/h)	7	1265	11	42	456	53	0	2	71	5	2	96
Future Volume (veh/h)	7	1265	11	42	456	53	0	2	71	5	2	96
Number	7	4	14	3	8	18	5	2	12	1	6	16
Initial Q (Qb), veh	0	0	0	0	0	0	0	0	0	0	0	0
Ped-Bike Adj(A_pbT)	1.00		1.00	1.00		1.00	1.00		1.00	1.00		1.00
Parking Bus, Adj	1.00	1.00	1.00	1.00	1.00	1.00	1.00	1.00	1.00	1.00	1.00	1.00
Adj Sat Flow, veh/h/ln	1863	1696	1900	1652	1652	1900	1583	1583	1900	1863	1863	1900
Adj Flow Rate, veh/h	8	1375	12	46	496	58	0	2	77	5	2	104
Adj No. of Lanes	1	2	0	1	2	0	1	1	0	1	1	0
Peak Hour Factor	0.92	0.92	0.92	0.92	0.92	0.92	0.92	0.92	0.92	0.92	0.92	0.92
Percent Heavy Veh, %	2	12	12	15	15	15	20	20	20	2	2	2
Cap, veh/h	514	1799	16	218	1636	191	316	7	282	310	8	423
Arrive On Green	0.01	0.55	0.55	0.04	0.58	0.58	0.00	0.21	0.21	0.01	0.27	0.27
Sat Flow, veh/h	1774	3274	29	1573	2833	330	1508	34	1317	1774	30	1558
Grp Volume(v), veh/h	8	677	710	46	274	280	0	0	79	5	0	106
Grp Sat Flow(s),veh/h/ln	1774	1612	1691	1573	1570	1594	1508	0	1351	1774	0	1588
Q Serve(g_s), s	0.2	28.9	28.9	1.1	7.9	8.0	0.0	0.0	4.3	0.2	0.0	4.6
Cycle Q Clear(g_c), s	0.2	28.9	28.9	1.1	7.9	8.0	0.0	0.0	4.3	0.2	0.0	4.6
Prop In Lane	1.00		0.02	1.00		0.21	1.00		0.97	1.00		0.98
Lane Grp Cap(c), veh/h	514	885	929	218	906	920	316	0	289	310	0	431
V/C Ratio(X)	0.02	0.76	0.76	0.21	0.30	0.30	0.00	0.00	0.27	0.02	0.00	0.25
Avail Cap(c_a), veh/h	606	1127	1182	280	1122	1139	400	0	289	401	0	431
HCM Platoon Ratio	1.00	1.00	1.00	1.00	1.00	1.00	1.00	1.00	1.00	1.00	1.00	1.00
Upstream Filter(I)	1.00	1.00	1.00	1.00	1.00	1.00	0.00	0.00	1.00	1.00	0.00	1.00
Uniform Delay (d), s/veh	8.8	15.5	15.5	13.2	9.6	9.6	0.0	0.0	29.1	25.7	0.0	25.2
Incr Delay (d2), s/veh	0.0	2.4	2.3	0.5	0.2	0.2	0.0	0.0	2.3	0.0	0.0	0.3
Initial Q Delay(d3),s/veh	0.0	0.0	0.0	0.0	0.0	0.0	0.0	0.0	0.0	0.0	0.0	0.0
%ile BackOfQ(50%),veh/ln	0.1	13.4	14.0	0.5	3.5	3.5	0.0	0.0	1.8	0.1	0.0	2.1
LnGrp Delay(d),s/veh	8.8	17.9	17.8	13.7	9.8	9.8	0.0	0.0	31.4	25.7	0.0	25.5
LnGrp LOS	A	B	B	B	A	A			C	C		C
Approach Vol, veh/h		1395			600			79			111	
Approach Delay, s/veh		17.8			10.1			31.4			25.5	
Approach LOS		B			B			C			C	

Timer	1	2	3	4	5	6	7	8
Assigned Phs	1	2	3	4	5	6	7	8
Phs Duration (G+Y+Rc), s	5.1	23.0	7.9	52.7	0.0	28.1	5.4	55.2
Change Period (Y+Rc), s	4.5	4.0	4.5	4.0	4.5	4.0	4.5	4.0
Max Green Setting (Gmax), s	5.1	19.0	6.9	62.0	5.0	19.1	5.5	63.4
Max Q Clear Time (g_c+I1), s	2.2	6.3	3.1	30.9	0.0	6.6	2.2	10.0
Green Ext Time (p_c), s	0.0	0.8	0.0	17.8	0.0	0.8	0.0	23.0

Intersection Summary	
HCM 2010 Ctrl Delay	16.6
HCM 2010 LOS	B

Movement	EBL	EBT	EBR	WBL	WBT	WBR	NBL	NBT	NBR	SBL	SBT	SBR
Lane Configurations												
Traffic Volume (veh/h)	11	806	4	106	1364	173	37	6	4	57	0	4
Future Volume (veh/h)	11	806	4	106	1364	173	37	6	4	57	0	4
Number	7	4	14	3	8	18	5	2	12	1	6	16
Initial Q, veh	0	0	0	0	0	0	0	0	0	0	0	0
Ped-Bike Adj (A_pbT)	1.00		1.00	1.00		1.00	1.00		1.00	1.00		1.00
Parking Bus Adj	1.00	1.00	1.00	1.00	1.00	1.00	1.00	1.00	1.00	1.00	1.00	1.00
Adj Sat Flow, veh/h/ln	1863	1696	1900	1652	1652	1900	1583	1583	1900	1863	1863	1900
Adj Flow Rate, veh/h	12	876	4	115	1483	188	40	7	4	62	0	4
Adj No. of Lanes	1	2	0	1	2	0	1	1	0	1	1	0
Peak Hour Factor	0.92	0.92	0.92	0.92	0.92	0.92	0.92	0.92	0.92	0.92	0.92	0.92
Percent Heavy Veh, %	2	12	12	15	15	15	20	20	20	2	2	2
Opposing Right Turn Influence	Yes			Yes			Yes			Yes		
Cap, veh/h	143	1893	9	380	1709	214	325	162	93	373	0	283
HCM Platoon Ratio	1.00	1.00	1.00	1.00	1.00	1.00	1.00	1.00	1.00	1.00	1.00	1.00
Prop Arrive On Green	0.01	0.58	0.58	0.05	0.61	0.61	0.03	0.17	0.17	0.04	0.00	0.18
Ln Grp Delay, s/veh	18.2	13.0	13.0	9.7	24.1	25.5	33.6	0.0	35.9	33.3	0.0	34.8
Ln Grp LOS	B	B	B	A	C	C	C		D	C		C
Approach Vol, veh/h		892			1786			51			66	
Approach Delay, s/veh		13.0			23.8			34.1			33.4	
Approach LOS		B			C			C			C	

Timer:	1	2	3	4	5	6	7	8
Assigned Phs	1	2	3	4	5	6	7	8
Case No	1.1	4.0	1.1	4.0	1.1	4.0	1.1	4.0
Phs Duration (G+Y+Rc), s	8.6	21.6	9.4	63.1	7.9	22.3	5.9	66.5
Change Period (Y+Rc), s	4.5	4.0	4.5	4.0	4.5	4.0	4.5	4.0
Max Green (Gmax), s	5.3	17.6	9.3	60.8	5.3	17.6	5.1	65.0
Max Allow Headway (MAH), s	3.8	5.5	3.9	5.3	3.9	5.5	3.8	5.3
Max Q Clear (g_c+l1), s	4.9	2.6	5.0	17.8	4.2	2.2	2.3	48.1
Green Ext Time (g_e), s	0.0	0.0	0.1	30.7	0.0	0.0	0.0	14.5
Prob of Phs Call (p_c)	0.83	1.00	0.96	1.00	0.68	0.89	0.29	1.00
Prob of Max Out (p_x)	1.00	0.00	0.64	0.67	1.00	0.00	1.00	0.89

Left-Turn Movement Data								
Assigned Mvmt	1		3		5		7	
Mvmt Sat Flow, veh/h	1774		1573		1508		1774	

Through Movement Data								
Assigned Mvmt		2		4		6		8
Mvmt Sat Flow, veh/h		947		3290		0		2808

Right-Turn Movement Data								
Assigned Mvmt		12		14		16		18
Mvmt Sat Flow, veh/h		541		15		1583		352

Left Lane Group Data								
Assigned Mvmt	1	0	3	0	5	0	7	0
Lane Assignment	(Pr/Pm)		(Pr/Pm)		(Pr/Pm)		(Pr/Pm)	

Lanes in Grp	1	0	1	0	1	0	1	0
Grp Vol (v), veh/h	62	0	115	0	40	0	12	0
Grp Sat Flow (s), veh/h/ln	1774	0	1573	0	1508	0	1774	0
Q Serve Time (g_s), s	2.9	0.0	3.0	0.0	2.2	0.0	0.3	0.0
Cycle Q Clear Time (g_c), s	2.9	0.0	3.0	0.0	2.2	0.0	0.3	0.0
Perm LT Sat Flow (s_l), veh/h/ln	1398	0	557	0	1196	0	295	0
Shared LT Sat Flow (s_sh), veh/h/ln	0	0	0	0	0	0	0	0
Perm LT Eff Green (g_p), s	17.6	0.0	60.0	0.0	17.6	0.0	59.1	0.0
Perm LT Serve Time (g_u), s	17.0	0.0	43.3	0.0	17.6	0.0	16.5	0.0
Perm LT Q Serve Time (g_ps), s	0.0	0.0	4.4	0.0	0.0	0.0	1.8	0.0
Time to First Blk (g_f), s	0.0	0.0	0.0	0.0	0.0	0.0	0.0	0.0
Serve Time pre Blk (g_fs), s	0.0	0.0	0.0	0.0	0.0	0.0	0.0	0.0
Prop LT Inside Lane (P_L)	1.00	0.00	1.00	0.00	1.00	0.00	1.00	0.00
Lane Grp Cap (c), veh/h	373	0	380	0	325	0	143	0
V/C Ratio (X)	0.17	0.00	0.30	0.00	0.12	0.00	0.08	0.00
Avail Cap (c_a), veh/h	392	0	447	0	353	0	206	0
Upstream Filter (I)	1.00	0.00	1.00	0.00	1.00	0.00	1.00	0.00
Uniform Delay (d1), s/veh	33.1	0.0	9.2	0.0	33.4	0.0	17.9	0.0
Incr Delay (d2), s/veh	0.2	0.0	0.4	0.0	0.2	0.0	0.3	0.0
Initial Q Delay (d3), s/veh	0.0	0.0	0.0	0.0	0.0	0.0	0.0	0.0
Control Delay (d), s/veh	33.3	0.0	9.7	0.0	33.6	0.0	18.2	0.0
1st-Term Q (Q1), veh/ln	1.4	0.0	1.2	0.0	0.9	0.0	0.1	0.0
2nd-Term Q (Q2), veh/ln	0.0	0.0	0.0	0.0	0.0	0.0	0.0	0.0
3rd-Term Q (Q3), veh/ln	0.0	0.0	0.0	0.0	0.0	0.0	0.0	0.0
%ile Back of Q Factor (f_B%)	1.00	0.00	1.00	0.00	1.00	0.00	1.00	0.00
%ile Back of Q (50%), veh/ln	1.5	0.0	1.3	0.0	0.9	0.0	0.2	0.0
%ile Storage Ratio (RQ%)	0.25	0.00	0.24	0.00	0.18	0.00	0.03	0.00
Initial Q (Qb), veh	0.0	0.0	0.0	0.0	0.0	0.0	0.0	0.0
Final (Residual) Q (Qe), veh	0.0	0.0	0.0	0.0	0.0	0.0	0.0	0.0
Sat Delay (ds), s/veh	0.0	0.0	0.0	0.0	0.0	0.0	0.0	0.0
Sat Q (Qs), veh	0.0	0.0	0.0	0.0	0.0	0.0	0.0	0.0
Sat Cap (cs), veh/h	0	0	0	0	0	0	0	0
Initial Q Clear Time (tc), h	0.0	0.0	0.0	0.0	0.0	0.0	0.0	0.0
Middle Lane Group Data								
Assigned Mvmt	0	2	0	4	0	6	0	8
Lane Assignment				T				T
Lanes in Grp	0	0	0	1	0	0	0	1
Grp Vol (v), veh/h	0	0	0	429	0	0	0	822
Grp Sat Flow (s), veh/h/ln	0	0	0	1612	0	0	0	1570
Q Serve Time (g_s), s	0.0	0.0	0.0	15.8	0.0	0.0	0.0	44.2
Cycle Q Clear Time (g_c), s	0.0	0.0	0.0	15.8	0.0	0.0	0.0	44.2
Lane Grp Cap (c), veh/h	0	0	0	927	0	0	0	955
V/C Ratio (X)	0.00	0.00	0.00	0.46	0.00	0.00	0.00	0.86
Avail Cap (c_a), veh/h	0	0	0	954	0	0	0	993
Upstream Filter (I)	0.00	0.00	0.00	1.00	0.00	0.00	0.00	1.00
Uniform Delay (d1), s/veh	0.0	0.0	0.0	12.6	0.0	0.0	0.0	16.5
Incr Delay (d2), s/veh	0.0	0.0	0.0	0.4	0.0	0.0	0.0	7.6
Initial Q Delay (d3), s/veh	0.0	0.0	0.0	0.0	0.0	0.0	0.0	0.0
Control Delay (d), s/veh	0.0	0.0	0.0	13.0	0.0	0.0	0.0	24.1
1st-Term Q (Q1), veh/ln	0.0	0.0	0.0	7.0	0.0	0.0	0.0	18.9

2nd-Term Q (Q2), veh/ln	0.0	0.0	0.0	0.1	0.0	0.0	0.0	2.0
3rd-Term Q (Q3), veh/ln	0.0	0.0	0.0	0.0	0.0	0.0	0.0	0.0
%ile Back of Q Factor (f_B%)	0.00	1.00	0.00	1.00	0.00	1.00	0.00	1.00
%ile Back of Q (50%), veh/ln	0.0	0.0	0.0	7.1	0.0	0.0	0.0	21.0
%ile Storage Ratio (RQ%)	0.00	0.00	0.00	0.28	0.00	0.00	0.00	0.72
Initial Q (Qb), veh	0.0	0.0	0.0	0.0	0.0	0.0	0.0	0.0
Final (Residual) Q (Qe), veh	0.0	0.0	0.0	0.0	0.0	0.0	0.0	0.0
Sat Delay (ds), s/veh	0.0	0.0	0.0	0.0	0.0	0.0	0.0	0.0
Sat Q (Qs), veh	0.0	0.0	0.0	0.0	0.0	0.0	0.0	0.0
Sat Cap (cs), veh/h	0	0	0	0	0	0	0	0
Initial Q Clear Time (tc), h	0.0	0.0	0.0	0.0	0.0	0.0	0.0	0.0
Right Lane Group Data								
Assigned Mvmt	0	12	0	14	0	16	0	18
Lane Assignment		T+R		T+R		T+R		T+R
Lanes in Grp	0	1	0	1	0	1	0	1
Grp Vol (v), veh/h	0	11	0	451	0	4	0	849
Grp Sat Flow (s), veh/h/ln	0	1488	0	1694	0	1583	0	1590
Q Serve Time (g_s), s	0.0	0.6	0.0	15.8	0.0	0.2	0.0	46.1
Cycle Q Clear Time (g_c), s	0.0	0.6	0.0	15.8	0.0	0.2	0.0	46.1
Prot RT Sat Flow (s_R), veh/h/ln	0.0	0.0	0.0	0.0	0.0	0.0	0.0	0.0
Prot RT Eff Green (g_R), s	0.0	0.0	0.0	0.0	0.0	0.0	0.0	0.0
Prop RT Outside Lane (P_R)	0.00	0.36	0.00	0.01	0.00	1.00	0.00	0.22
Lane Grp Cap (c), veh/h	0	255	0	974	0	283	0	968
V/C Ratio (X)	0.00	0.04	0.00	0.46	0.00	0.01	0.00	0.88
Avail Cap (c_a), veh/h	0	255	0	1002	0	283	0	1006
Upstream Filter (I)	0.00	1.00	0.00	1.00	0.00	1.00	0.00	1.00
Uniform Delay (d1), s/veh	0.0	35.5	0.0	12.6	0.0	34.8	0.0	16.9
Incr Delay (d2), s/veh	0.0	0.3	0.0	0.3	0.0	0.0	0.0	8.7
Initial Q Delay (d3), s/veh	0.0	0.0	0.0	0.0	0.0	0.0	0.0	0.0
Control Delay (d), s/veh	0.0	35.9	0.0	13.0	0.0	34.8	0.0	25.5
1st-Term Q (Q1), veh/ln	0.0	0.3	0.0	7.4	0.0	0.1	0.0	20.0
2nd-Term Q (Q2), veh/ln	0.0	0.0	0.0	0.1	0.0	0.0	0.0	2.3
3rd-Term Q (Q3), veh/ln	0.0	0.0	0.0	0.0	0.0	0.0	0.0	0.0
%ile Back of Q Factor (f_B%)	0.00	1.00	0.00	1.00	0.00	1.00	0.00	1.00
%ile Back of Q (50%), veh/ln	0.0	0.3	0.0	7.5	0.0	0.1	0.0	22.4
%ile Storage Ratio (RQ%)	0.00	0.01	0.00	0.29	0.00	0.00	0.00	0.77
Initial Q (Qb), veh	0.0	0.0	0.0	0.0	0.0	0.0	0.0	0.0
Final (Residual) Q (Qe), veh	0.0	0.0	0.0	0.0	0.0	0.0	0.0	0.0
Sat Delay (ds), s/veh	0.0	0.0	0.0	0.0	0.0	0.0	0.0	0.0
Sat Q (Qs), veh	0.0	0.0	0.0	0.0	0.0	0.0	0.0	0.0
Sat Cap (cs), veh/h	0	0	0	0	0	0	0	0
Initial Q Clear Time (tc), h	0.0	0.0	0.0	0.0	0.0	0.0	0.0	0.0
Intersection Summary								
HCM 2010 Ctrl Delay		20.8						
HCM 2010 LOS		C						

Movement	EBL	EBT	EBR	WBL	WBT	WBR	NBL	NBT	NBR	SBL	SBT	SBR
Lane Configurations												
Traffic Volume (veh/h)	11	806	4	106	1364	173	37	6	4	57	0	4
Future Volume (veh/h)	11	806	4	106	1364	173	37	6	4	57	0	4
Number	7	4	14	3	8	18	5	2	12	1	6	16
Initial Q (Qb), veh	0	0	0	0	0	0	0	0	0	0	0	0
Ped-Bike Adj(A_pbT)	1.00		1.00	1.00		1.00	1.00		1.00	1.00		1.00
Parking Bus, Adj	1.00	1.00	1.00	1.00	1.00	1.00	1.00	1.00	1.00	1.00	1.00	1.00
Adj Sat Flow, veh/h/ln	1863	1696	1900	1652	1652	1900	1583	1583	1900	1863	1863	1900
Adj Flow Rate, veh/h	12	876	4	115	1483	188	40	7	4	62	0	4
Adj No. of Lanes	1	2	0	1	2	0	1	1	0	1	1	0
Peak Hour Factor	0.92	0.92	0.92	0.92	0.92	0.92	0.92	0.92	0.92	0.92	0.92	0.92
Percent Heavy Veh, %	2	12	12	15	15	15	20	20	20	2	2	2
Cap, veh/h	143	1893	9	380	1709	214	325	162	93	373	0	283
Arrive On Green	0.01	0.58	0.58	0.05	0.61	0.61	0.03	0.17	0.17	0.04	0.00	0.18
Sat Flow, veh/h	1774	3290	15	1573	2808	352	1508	947	541	1774	0	1583
Grp Volume(v), veh/h	12	429	451	115	822	849	40	0	11	62	0	4
Grp Sat Flow(s),veh/h/ln	1774	1612	1694	1573	1570	1590	1508	0	1488	1774	0	1583
Q Serve(g_s), s	0.3	15.8	15.8	3.0	44.2	46.1	2.2	0.0	0.6	2.9	0.0	0.2
Cycle Q Clear(g_c), s	0.3	15.8	15.8	3.0	44.2	46.1	2.2	0.0	0.6	2.9	0.0	0.2
Prop In Lane	1.00		0.01	1.00		0.22	1.00		0.36	1.00		1.00
Lane Grp Cap(c), veh/h	143	927	974	380	955	968	325	0	255	373	0	283
V/C Ratio(X)	0.08	0.46	0.46	0.30	0.86	0.88	0.12	0.00	0.04	0.17	0.00	0.01
Avail Cap(c_a), veh/h	206	954	1002	447	993	1006	353	0	255	392	0	283
HCM Platoon Ratio	1.00	1.00	1.00	1.00	1.00	1.00	1.00	1.00	1.00	1.00	1.00	1.00
Upstream Filter(I)	1.00	1.00	1.00	1.00	1.00	1.00	1.00	0.00	1.00	1.00	0.00	1.00
Uniform Delay (d), s/veh	17.9	12.6	12.6	9.2	16.5	16.9	33.4	0.0	35.5	33.1	0.0	34.8
Incr Delay (d2), s/veh	0.3	0.4	0.3	0.4	7.6	8.7	0.2	0.0	0.3	0.2	0.0	0.0
Initial Q Delay(d3),s/veh	0.0	0.0	0.0	0.0	0.0	0.0	0.0	0.0	0.0	0.0	0.0	0.0
%ile BackOfQ(50%),veh/ln	0.2	7.1	7.5	1.3	21.0	22.4	0.9	0.0	0.3	1.5	0.0	0.1
LnGrp Delay(d),s/veh	18.2	13.0	13.0	9.7	24.1	25.5	33.6	0.0	35.9	33.3	0.0	34.8
LnGrp LOS	B	B	B	A	C	C	C		D	C		C
Approach Vol, veh/h		892			1786			51			66	
Approach Delay, s/veh		13.0			23.8			34.1			33.4	
Approach LOS		B			C			C			C	

Timer	1	2	3	4	5	6	7	8
Assigned Phs	1	2	3	4	5	6	7	8
Phs Duration (G+Y+Rc), s	8.6	21.6	9.4	63.1	7.9	22.3	5.9	66.5
Change Period (Y+Rc), s	4.5	4.0	4.5	4.0	4.5	4.0	4.5	4.0
Max Green Setting (Gmax), s	5.3	17.6	9.3	60.8	5.3	17.6	5.1	65.0
Max Q Clear Time (g_c+I1), s	4.9	2.6	5.0	17.8	4.2	2.2	2.3	48.1
Green Ext Time (p_c), s	0.0	0.0	0.1	30.7	0.0	0.0	0.0	14.5

Intersection Summary	
HCM 2010 Ctrl Delay	20.8
HCM 2010 LOS	C