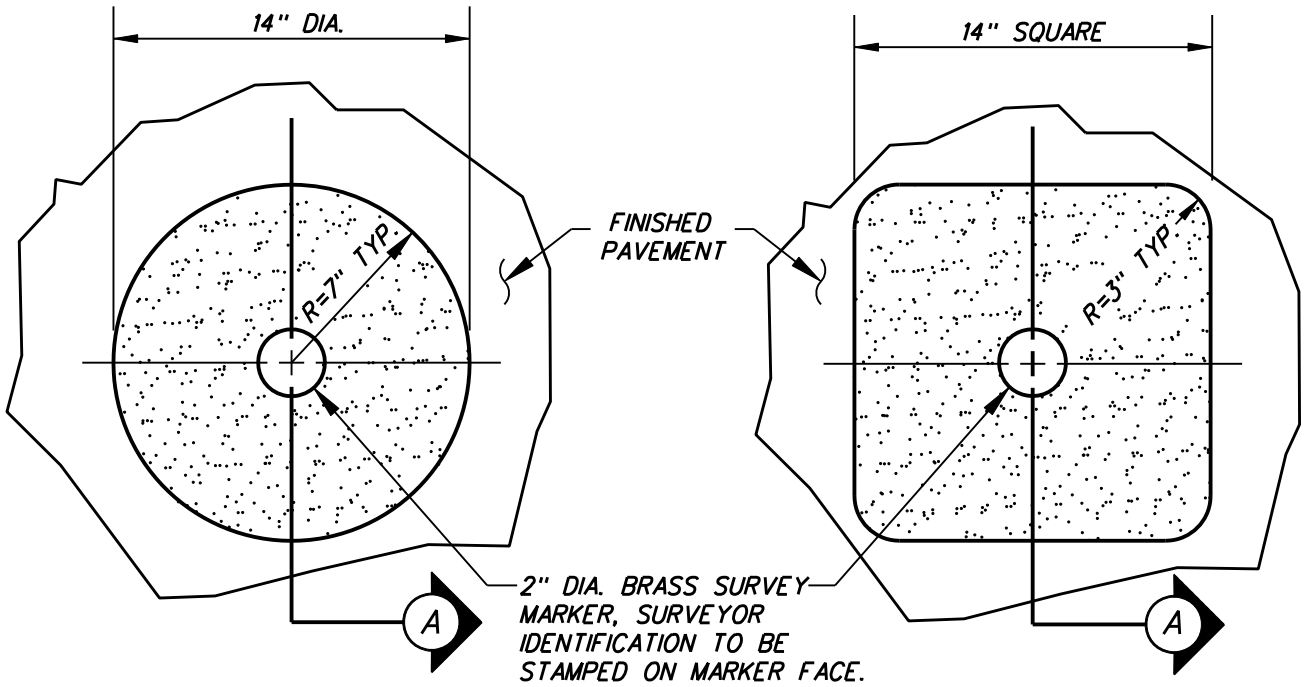

PLAN VIEW
PREFERRED OPTION

PLAN VIEW
ALTERNATE OPTION

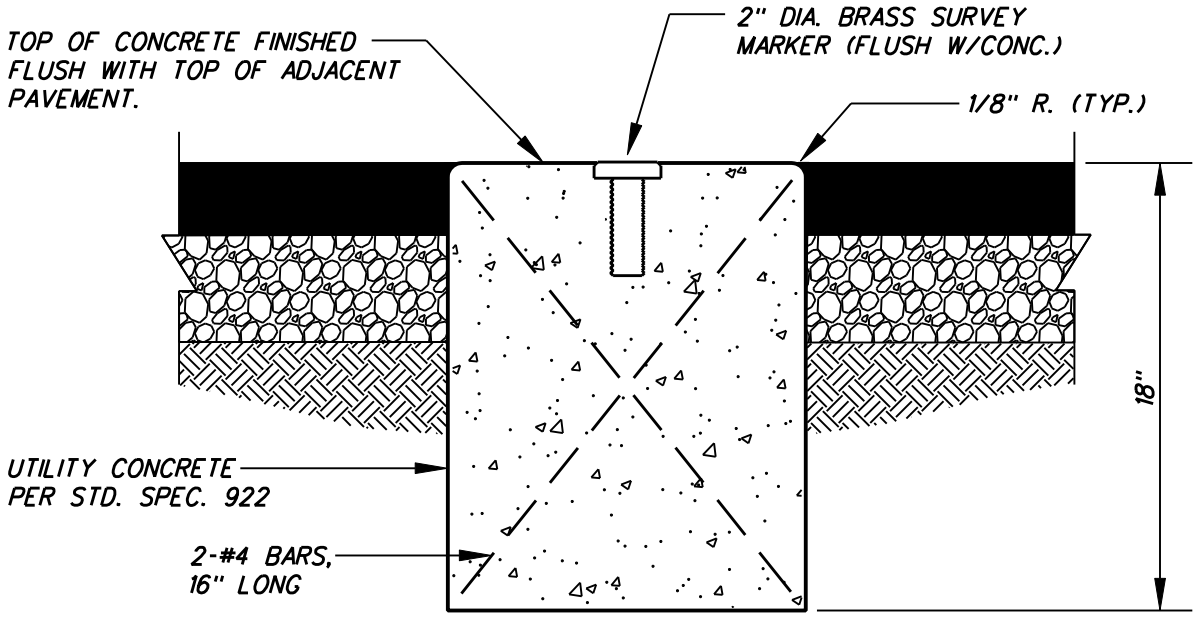

A SECTION

NOTE: 1. THE 2- #4 BARS MAY BE REPLACED BY A MAGNET OF A SIZE APPROVED BY THE AGENCY, PLACED AT THE BASE OF THE BRASS MARKER.

2. BRASS MARKER TO BE SET BY CONTRACTOR AND MARKED BY SURVEYOR.

3. SURVEYOR IDENTIFICATION TO BE STAMPED ON MARKER FACE.

ISSUED:		STANDARD DETAIL		DETAIL NO.
10/88		SURVEY MONUMENT		103
REVISED:				
03/12				1 OF 1

103018.DWG 08/03/00 15:46

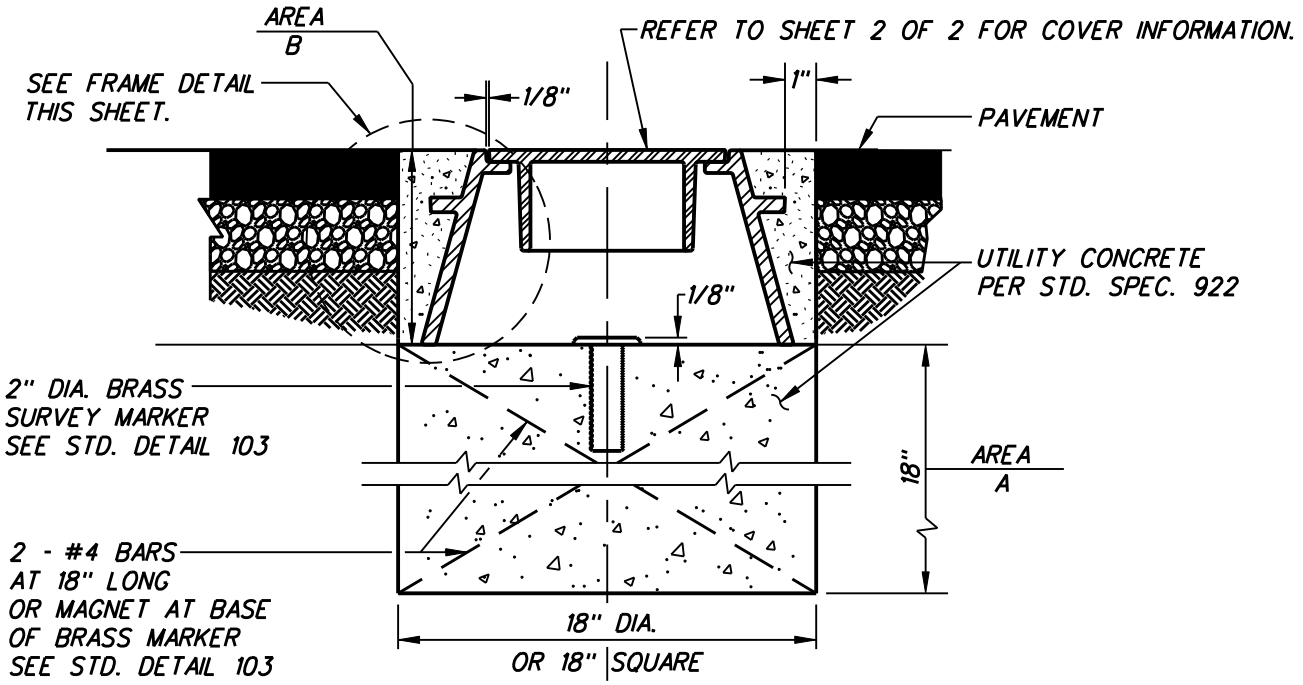

FRAME AND MONUMENT

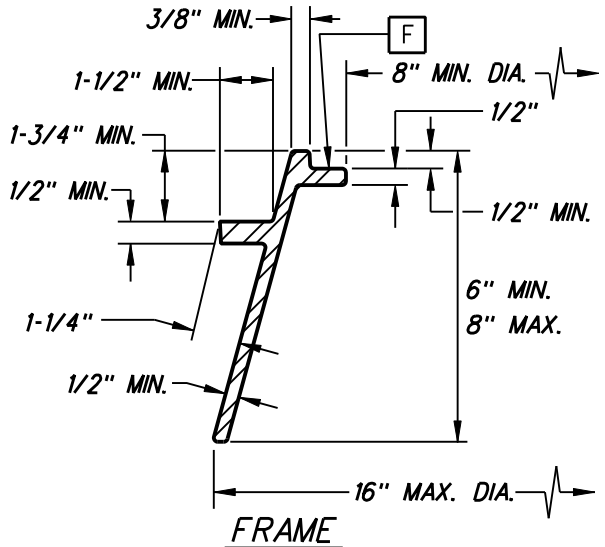

FRAME

NOTE:

DIMENSIONS NOT SHOWN PER THE MANUFACTURER

NOTES:

1. SURVEY MARKER, FRAME AND COVER, COMPLETE-IN-PLACE, SHALL BE CONSIDERED A SINGLE UNIT.
2. FRAME AND COVER SHALL BE FIRST CLASS GREY IRON, TOUGH AND EVEN GRAINED.
3. FRAME AND COVER TO BE TRAFFIC RATED.
4. FRAME TO BE SET ON CONCRETE AND LEFT FREE TO SLIDE.
5. BRASS MARKER TO BE SET BY CONTRACTOR AND MARKED BY SURVEYOR.
6. SURVEYORS REGISTRATION NUMBER TO BE STAMPED ON BRASS CAP.
7. AREA "B" TO BE PLACED AFTER AREA "A" HAS ACHIEVED INITIAL SET.
8. PORTIONS OF THE FRAME TO BE MACHINE FINISHED ARE SHOWN BY THE SYMBOL F
   THE ALLOWABLE TOLERANCE FOR MACHINED AREAS SHALL BE 1/64".

ISSUED:		STANDARD DETAIL		DETAIL NO.
10/88		SURVEY MONUMENT FRAME AND COVER		103.1
REVISED:				
03/12				1 OF 2

19302B.DWG 08/02/00 10:44

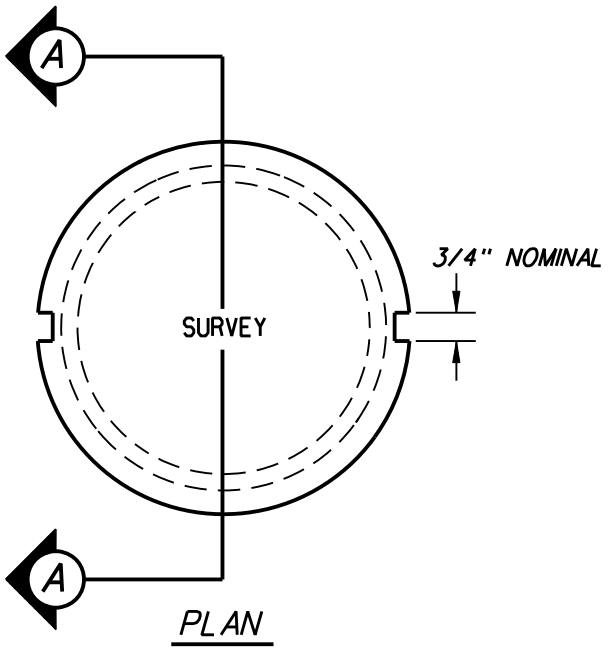

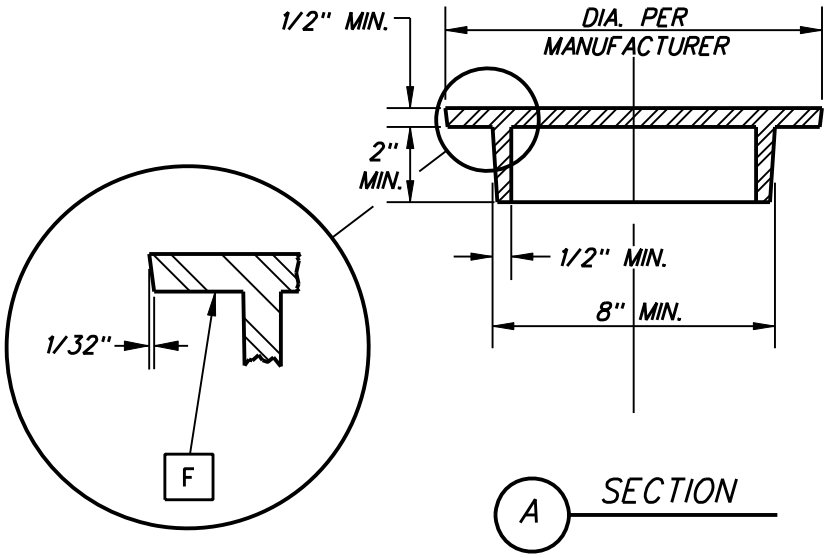

NOTES:

1. COVER SHALL BE TRAFFIC RATED.
2. LETTERS ON COVER SHALL BE BLOCK 5/8" X 3/4" AND RAISED 1/16" AND 1/8" WIDE.
3. PORTIONS OF THE COVER TO BE MACHINE FINISHED ARE SHOWN BY THE SYMBOL, F THE ALLOWABLE TOLERANCE FOR MACHINED AREAS SHALL BE 1/64".

ISSUED:		STANDARD DETAIL		DETAIL NO.
10/88		SURVEY MONUMENT COVER		103.1
REVISED:				
03/12				2 OF 2

10303B.DWG 06/02/00 09:03