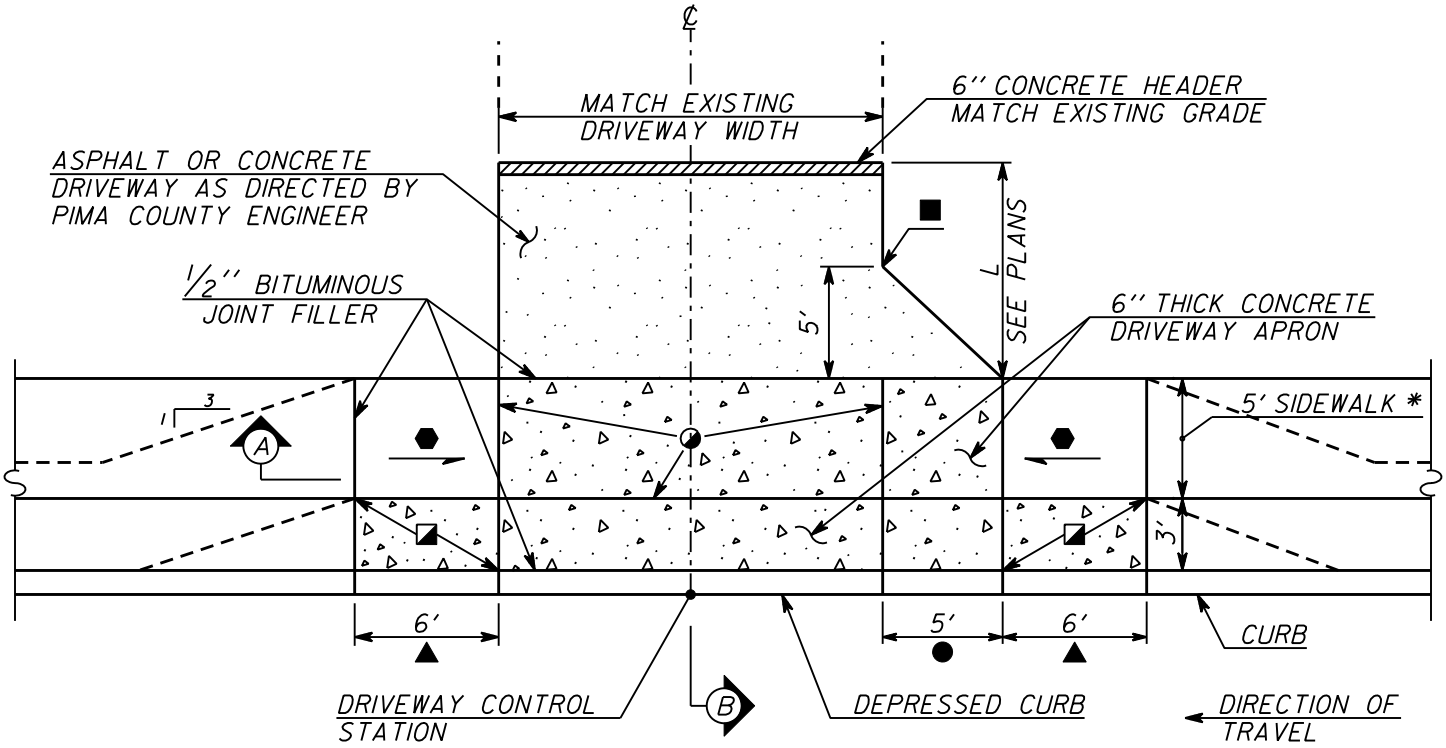

- 1/4'' DEEP SCORED JOINTS EVENLY SPACED (8' MAX. SPACING).
- SIDEWALK TRANSITION TO DRIVEWAY GRADE AT 12:1 MAX.
- SLOPE TO MATCH DEPRESSED CURB.
- WARP TO MATCH SIDEWALK TRANSITION.
- DRIVEWAY APRON LIMIT.
- *** FOR ROADWAY LONGITUDINAL GRADES OVER 8.3%, PCDOT ENGINEER SHALL APPROVE LENGTH.
- ADDITIONAL DEPRESSED CURB. LOCATE ON INGRESS SIDE IN THE DIRECTION OF TRAVEL. USE FOR POSTED SPEEDS ≥ 35 mph.
- BEGIN TRANSITION TO MATCH EXISTING DRIVEWAY WIDTH.
- * 4' ONLY FOR USE WITH ALTERNATIVE NO. 2 LOCAL STREET, URBAN RESIDENTIAL SUBDIVISION (DTL 4.2 - PCDOT SUBDIVISION AND DEVELOPMENT STANDARDS).

PLAN VIEW
N.T.S.

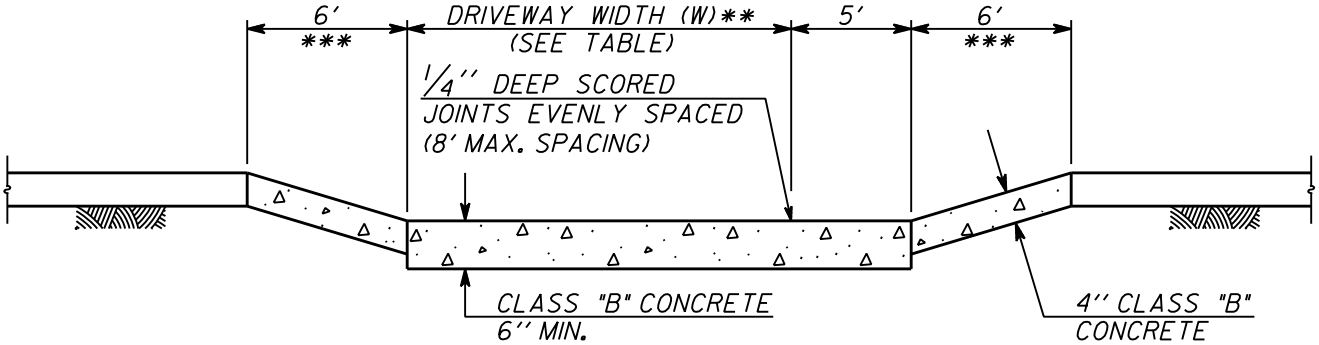

DRIVEWAY WIDTH **	
SINGLE RESIDENTIAL	14'
JOINT USE RESIDENTIAL	20'
COMMERCIAL AND INDUSTRIAL (SEE SUBDIVISION AND DEVELOPMENT STREET STANDARDS MANUAL)	24' TO 30'

(A) SECTION
N.T.S.

** WIDTH MEASURED AT BACK OF CURB. MATCH THE EXISTING DRIVEWAY WIDTH AT THE MATCH POINT, NOT TO EXCEED THE WIDTH SHOWN.

ISSUED:	STANDARD DETAIL	DETAIL NO.
10/88	DRIVEWAY APRON PIMA COUNTY DOT	206
REVISED: 04/11		SHEET 1 OF 2

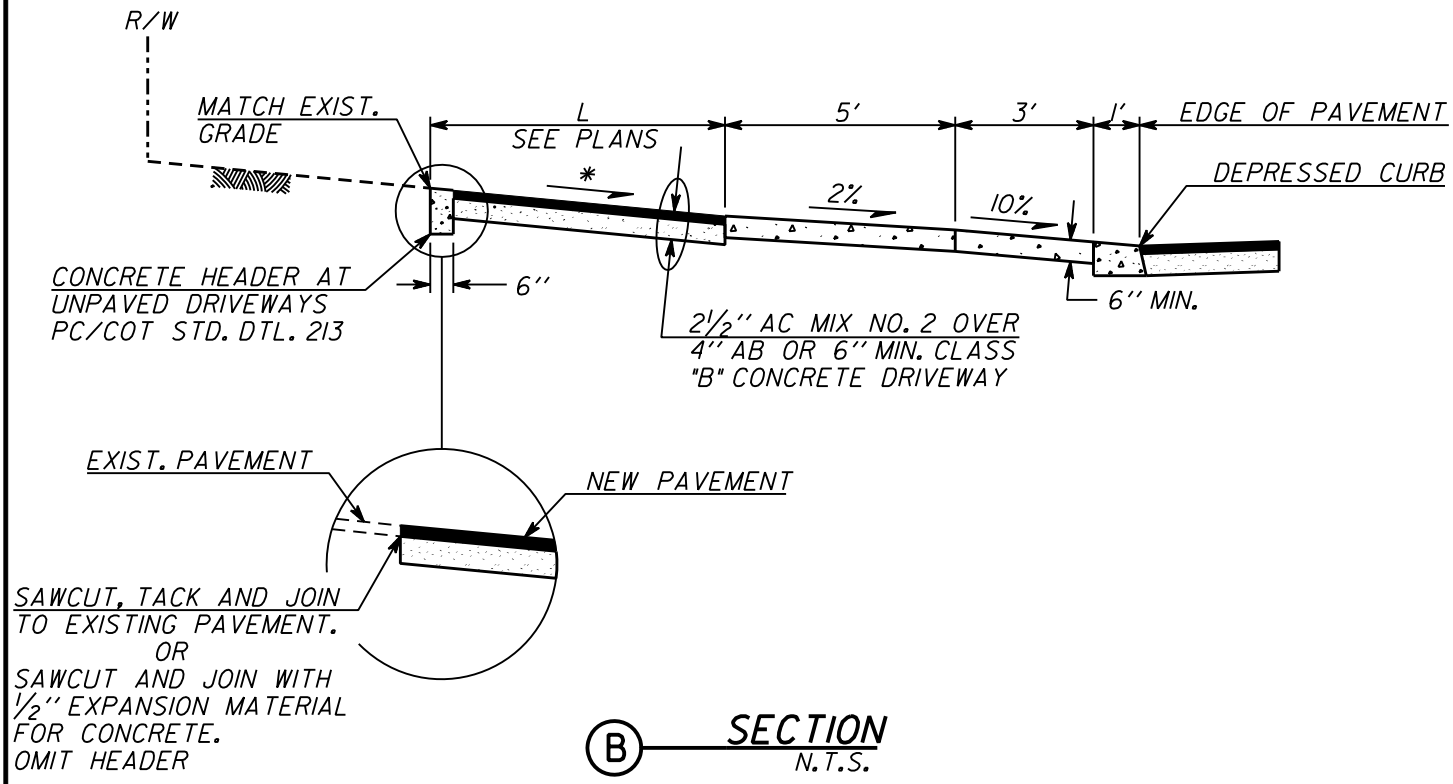

B **SECTION**
N.T.S.

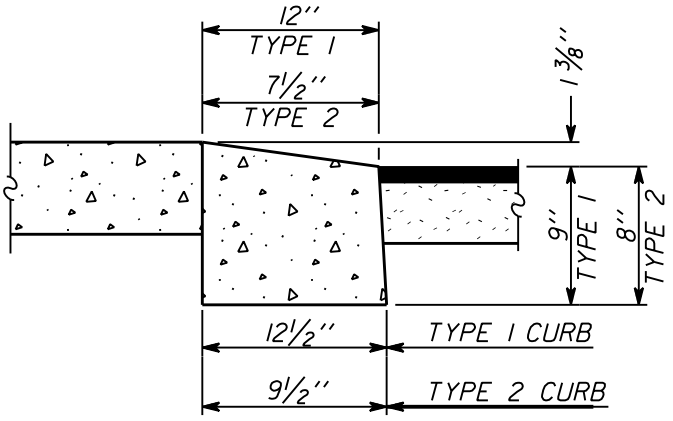

DEPRESSED CURB DETAIL
N.T.S.

NOTES:

FOR THE DESIGN OF COMMERCIAL DRIVEWAYS, SEE THE PIMA COUNTY SUBDIVISION AND DEVELOPMENT STREET STANDARDS MANUAL.

* GRADE BREAK >8% REQUIRES A VERTICAL CURVE, L=10' MINIMUM. THE VERTICAL CURVE SHALL NOT ENCROACH ON THE SIDEWALK.

ALL DRIVEWAYS SHALL CONFORM TO THE AMERICANS WITH DISABILITIES ACT OF 1990. DEVIATIONS FROM THE STANDARD DETAIL SHALL BE COORDINATED WITH THE AGENCY.

ISSUED:		STANDARD DETAIL		DETAIL NO.
10/88	SEAL OF PIMA COUNTY ARIZONA	DRIVEWAY APRON PIMA COUNTY DOT	SEAL OF PIMA COUNTY ARIZONA	206
REVISED: 10/10				SHEET 2 OF 2

20701.8.DWG 01/09

① ACCESS RAMP CONTROL POINT SEE PLANS FOR LOCATION

② DETECTABLE WARNING 6' x 2' (TYP.) SEE SHT. 6 OF 6

③ ROUGH BROOM FINISH (TYP.)

④ SEE PLANS FOR RADIUS.

⑤ BLENDED TRANSITION (TYP.)

⑥ MID-POINT OF CURB RETURN

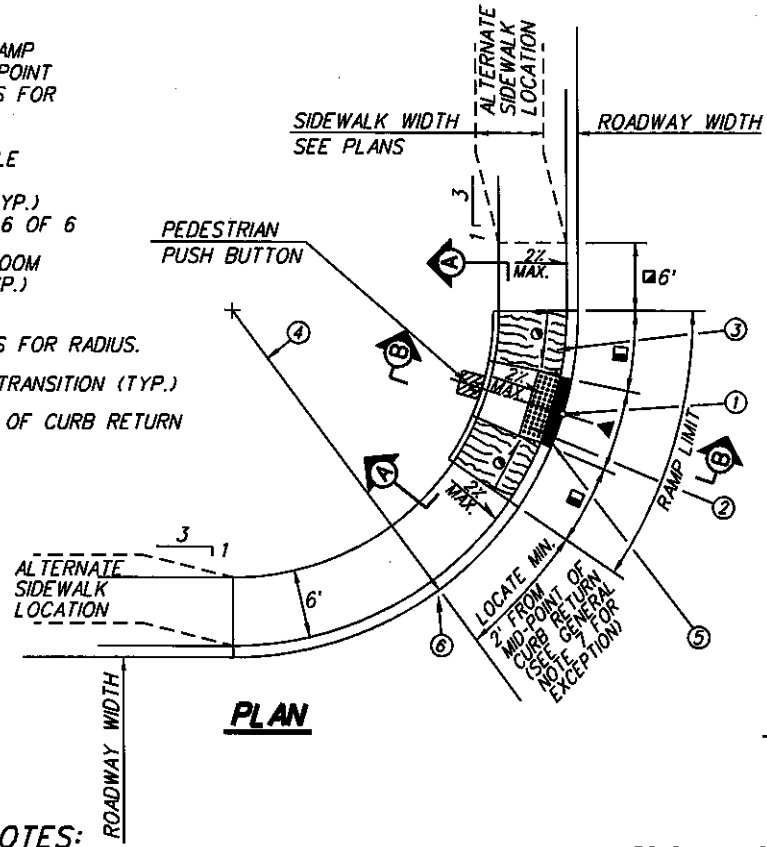

PLAN

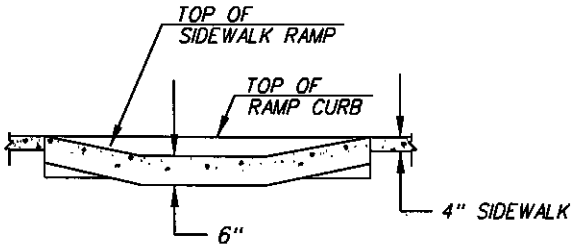

A SECTION

◪ PROVIDE MINIMUM OF 6' OF SIDEWALK ALONG CURBLINE (TYP.)

◑ SLOPE 5% MIN. & 8.33% (12:1) MAX.

◧ 6' MINIMUM, 15' MAXIMUM

▲ 6' WIDE AT BACK OF CURB

■ BLENDED TRANSITION

✱ PEDESTRIAN PUSH BUTTON AND POLE SHALL BE PLACED ONLY WHEN APPLICABLE AND APPROVED BY PCDOT ENGINEERING.

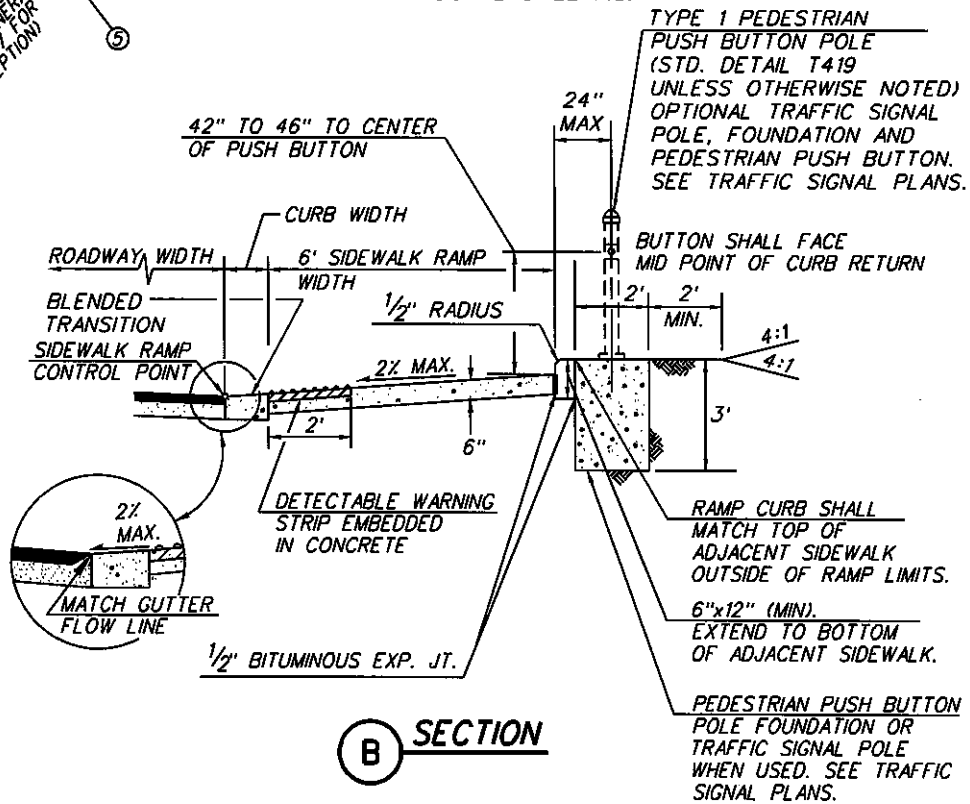

B SECTION

GENERAL NOTES:

1. SEE SHEET 6 OF 6 FOR ADDITIONAL CONSTRUCTION NOTES.
2. PEDESTRIAN PUSH BUTTON POLE OR TRAFFIC SIGNAL POLE. SEE TRAFFIC SIGNAL PLANS FOR ADDITIONAL INFORMATION.
3. SEE STD. DETAIL 200 FOR JOINT REQUIREMENTS.
4. RAMP JOINTS ALONG RETURNS SHALL BE RADIAL FROM THE BACK OF CURB OR BACK OF DETECTABLE WARNING STRIP.
5. SEE PROJECT PLANS FOR RAMP LOCATION. CURB ACCESS RAMP SHOULD BE ORIENTED TO ALIGN WITH THE CROSSWALK OR STOP BAR, MEDIAN REFUGE AREA, AND WITH THE OPPOSITE ACCESS RAMP IN THE DIRECTION OF PEDESTRIAN TRAVEL.
6. DRAINAGE INLETS ARE NOT PERMITTED WITHIN CROSSWALKS OR WITHIN 10' OF AN ACCESS RAMP.
7. CURB ACCESS RAMP LOCATION IS NOT RESTRICTED WITHIN CURB RADII ON LOCAL STREETS AND RESIDENTIAL COLLECTORS WITH A MAXIMUM 2,500 VEHICLES PER DAY AND WHICH IS NOT ADJACENT TO A MAJOR ARTERIAL.

ISSUED: 04/10

REVISED: 11/11

STANDARD DETAIL

TYPE 1
CURB ACCESS RAMP
PIMA COUNTY D.O.T. DETAIL

DETAIL NO. 207

SHEET 1 OF 6

207OLA.DWG 01/09

ISSUED:	04/10
REVISED:	11/11

① ACCESS RAMP CONTROL POINT. (SEE PLANS FOR LOCATION (TYP.))

② DETECTABLE WARNING STRIP 6' x 2' (TYP.) SEE SHT. 6 OF 6

③ ROUGH BROOM FINISH (TYP.)

④ SEE PLANS FOR RADIUS

⑤ BLEND TRANSITION (TYP.)

⑥ MID-POINT CURB RETURN. (LOCATE RAMP LIMIT A MIN. 2' FROM MID-POINT (TYP.)).

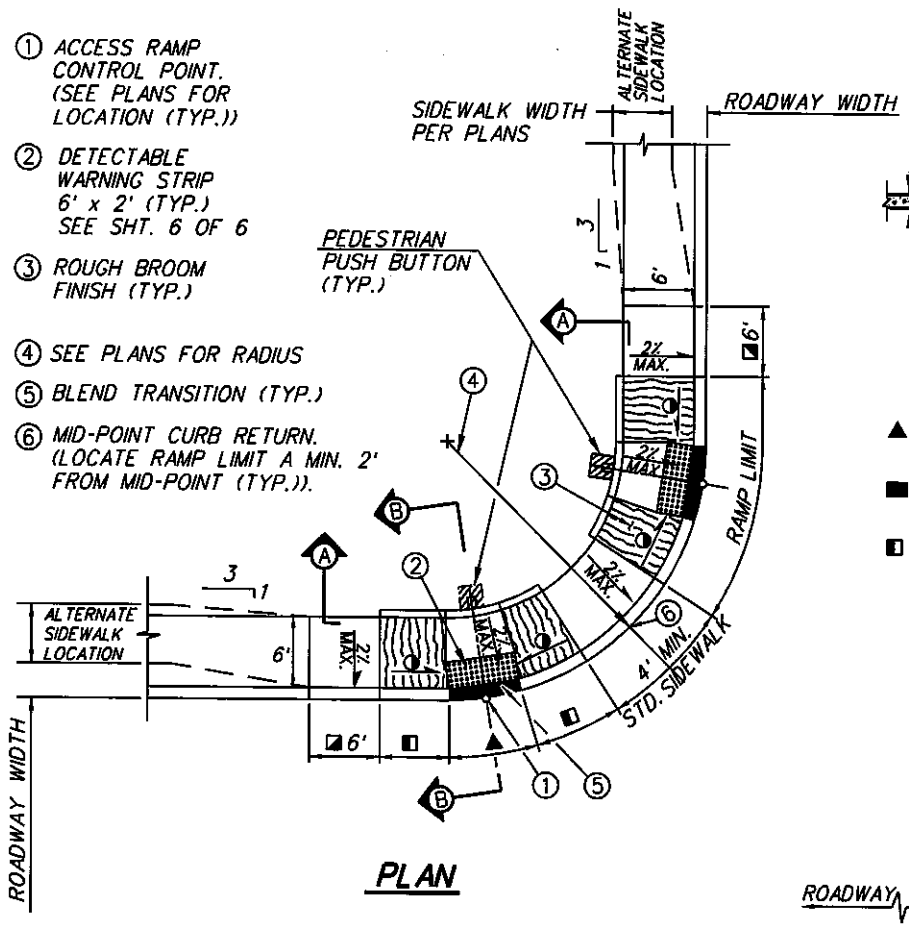

PLAN

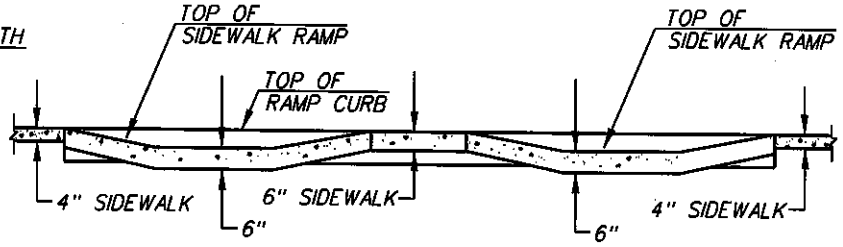

A SECTION

▲ 6' AT BACK OF CURB

■ BLENDED TRANSITION

◧ 6' MINIMUM, 15' MAXIMUM

◪ PROVIDE MINIMUM OF 6' OF SIDEWALK ALONG CURBLINE (TYP.)

◑ SLOPE 5% MIN. & 8.33% (12:1) MAX.

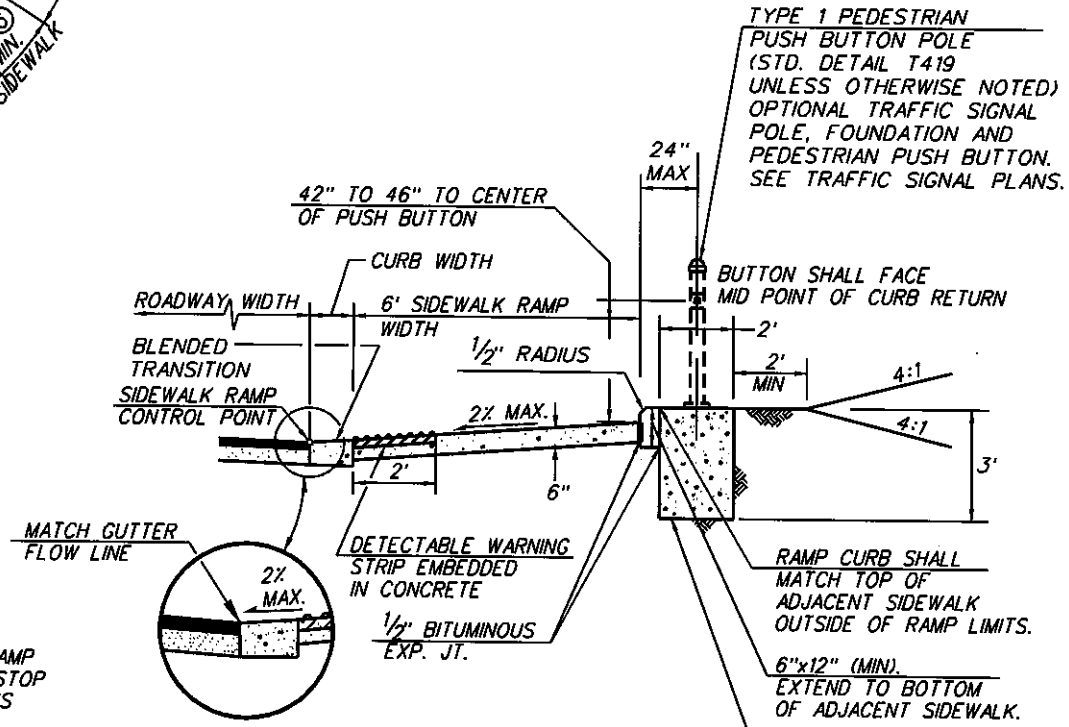

B SECTION

GENERAL NOTES:

1. SEE SHEET 6 OF 6 FOR ADDITIONAL CONSTRUCTION NOTES.
2. PEDESTRIAN PUSH BUTTON POLE OR TRAFFIC SIGNAL POLE. SEE TRAFFIC SIGNAL PLANS FOR ADDITIONAL INFORMATION.
3. SEE STD. DETAIL 200 FOR JOINT REQUIREMENTS.
4. RAMP JOINTS ALONG RETURNS SHALL BE RADIAL FROM THE BACK OF CURB OR BACK OF DETECTABLE WARNING STRIP.
5. SEE PROJECT PLANS FOR RAMP LOCATION. CURB ACCESS RAMP SHOULD BE ORIENTED TO ALIGN WITH THE CROSSWALK OR STOP BAR, MEDIAN REFUGE AREA, AND WITH THE OPPOSITE ACCESS RAMP IN THE DIRECTION OF PEDESTRIAN TRAVEL.
6. DRAINAGE INLETS ARE NOT PERMITTED WITHIN CROSSWALKS OR WITHIN 10' OF AN ACCESS RAMP.

STANDARD DETAIL

TYPE 1

CURB ACCESS RAMP

DUAL RAMP CONFIGURATION

PIMA COUNTY D.O.T. DETAIL

DETAIL NO. 207

SHEET 2 OF 6

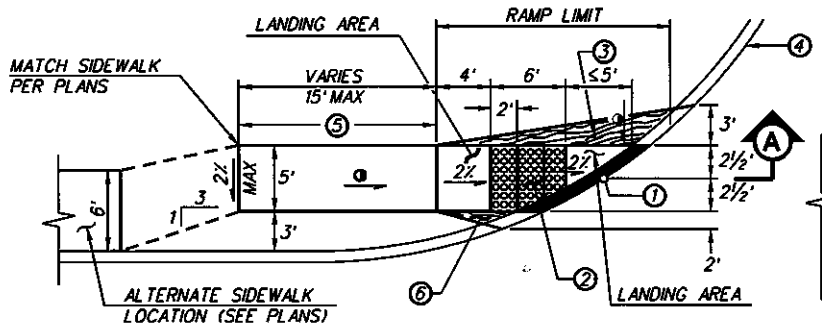

40' RADIUS RETURN

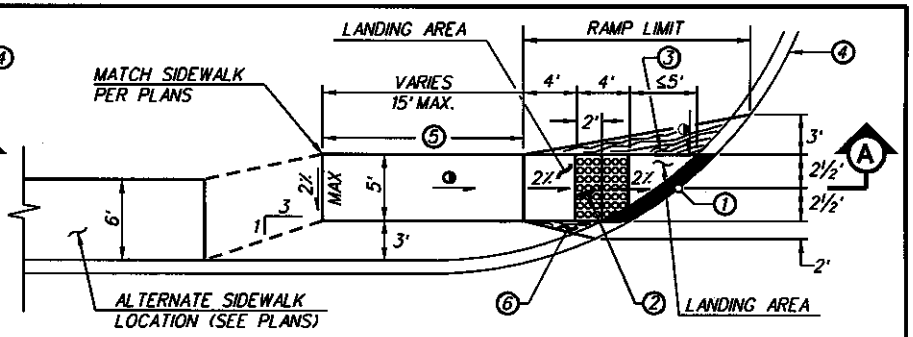

25' & 30' RADIUS RETURN

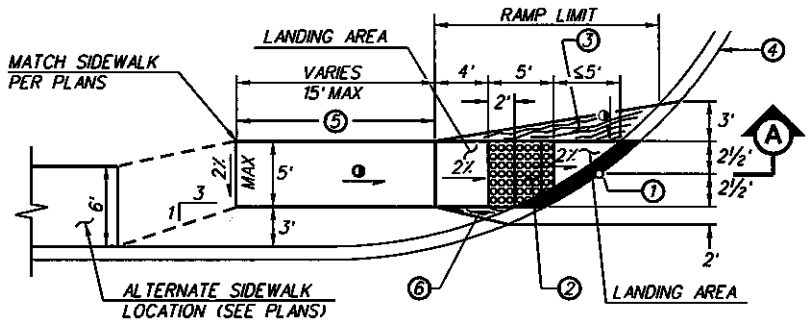

35' RADIUS RETURN

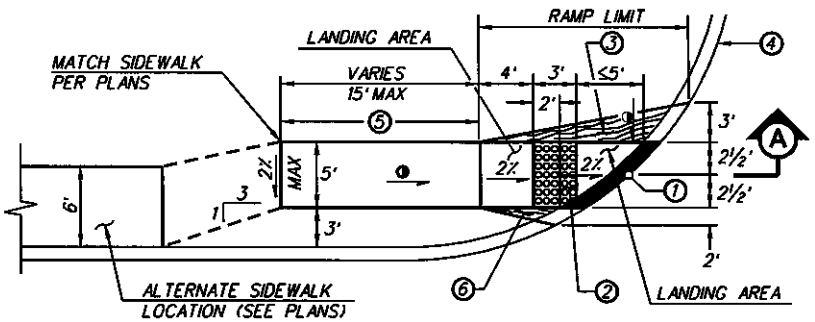

< 25' RADIUS RETURN

- SLOPE: 5% MIN. AND 8.33% (12:1) MAX.
- BLENDED TRANSITION.

1. ACCESS RAMP CONTROL POINT. SEE PLANS FOR LOCATION. (SIDEWALK MID-POINT).
2. DETECTABLE WARNING STRIP. FOR LENGTH SEE DETAILS ABOVE.
3. ROUGH BROOM FINISH. ¼" DEEP SCORED JOINT SHALL BE PLACED PERPENDICULAR TO DIRECTION OF TRAVEL AT THE MIDWAY POINT OF ACCESS RAMP LENGTH.
4. SEE PLANS FOR RADIUS.
5. TRANSITION GRADING TO MATCH TYPICAL SECTION.
6. ROUGH BROOM FINISH.

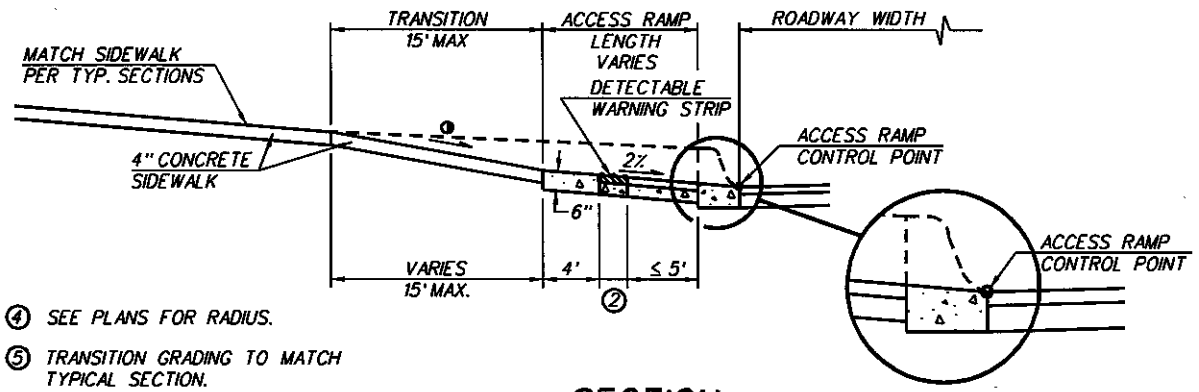

A SECTION
N.T.S.

ISSUED:	5/11
REVISED:	11/11

THE SEAL OF PIMA COUNTY ARIZONA

STANDARD DETAIL

TYPE 2
CURB ACCESS
DIRECTIONAL RAMP

PIMA COUNTY D.O.T. DETAIL

THE SEAL OF PIMA COUNTY ARIZONA

DETAIL NO. 207

SHEET 3 OF 6

20701.D.DWG 01/09

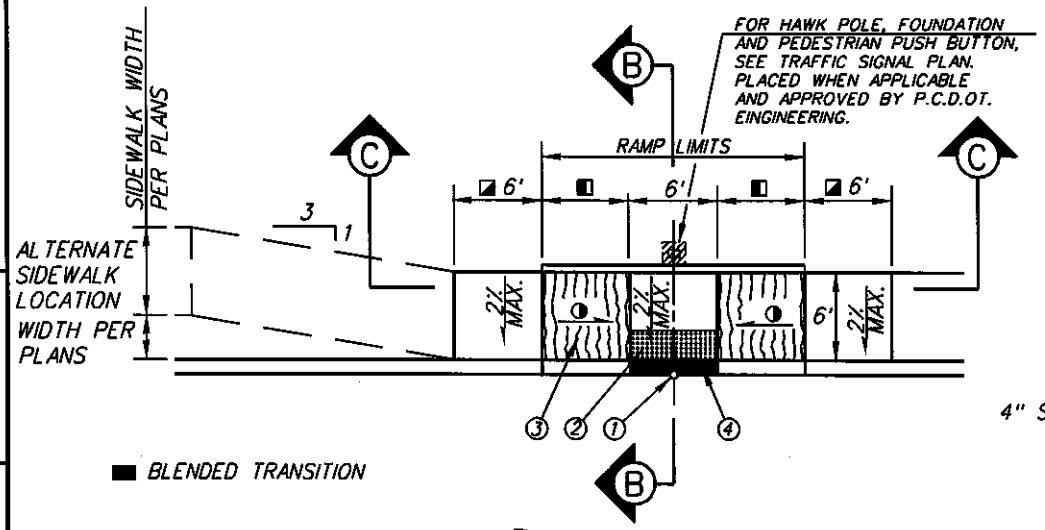

■ BLENDED TRANSITION

◪ PROVIDE MINIMUM OF 6' OF SIDEWALK ALONG CURBLINE (TYP.)

◑ SLOPE 5% MIN. & 8.33% (12:1) MAX.

◧ 6' MINIMUM, 15' MAXIMUM

PLAN

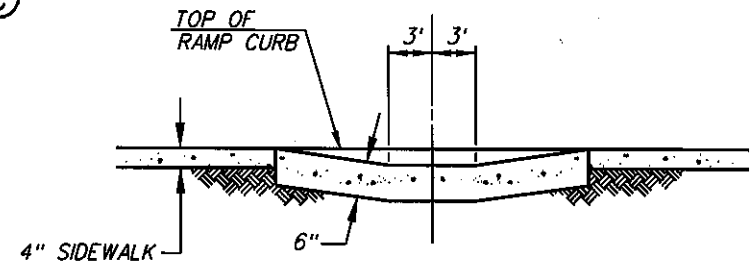

(C) SECTION

① ACCESS RAMP CONTROL POINT. SEE PLANS FOR LOCATION (TYP.)

② DETECTABLE WARNING STRIP 6' x 2' (TYP.) SEE SHT. 6 OF 6

③ ROUGH BROOM FINISH, (TYP.)

④ BLENDED TRANSITION

GENERAL NOTES:

1. SEE SHEET 6 OF 6 FOR ADDITIONAL CONSTRUCTION NOTES.
2. SEE STD. DETAIL 200 FOR JOINT REQUIREMENTS.
3. DRAINAGE INLETS ARE NOT PERMITTED WITHIN CROSSWALKS OR WITHIN 10' OF AN ACCESS RAMP.
4. SEE PROJECT PLANS FOR RAMP LOCATION. CURB ACCESS RAMP SHOULD BE ORIENTED TO ALIGN WITH THE CROSSWALK OR STOP BAR, MEDIAN REFUGE AREA, AND WITH THE OPPOSITE ACCESS RAMP IN THE DIRECTION OF PEDESTRIAN TRAVEL.

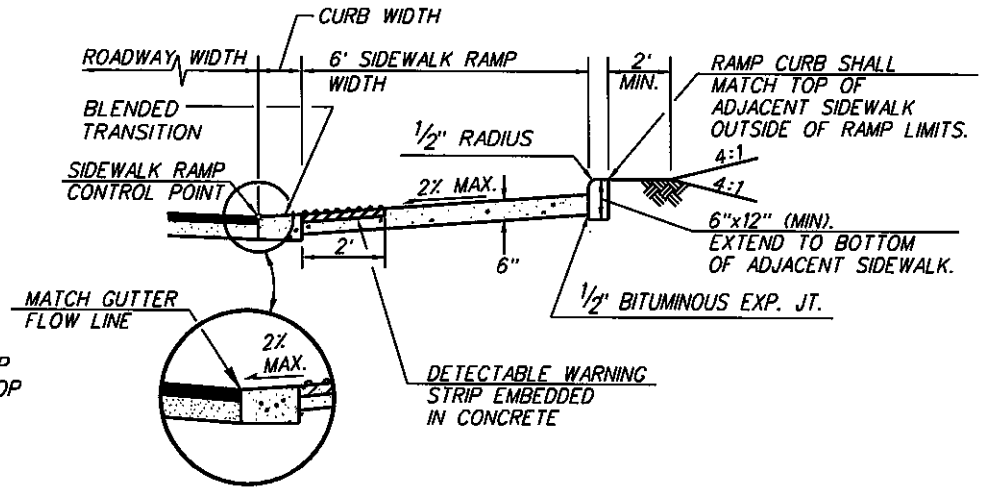

(B) SECTION

ISSUED: 11/11

REVISED: 05/10

THE SEAL OF PIMA COUNTY ARIZONA

STANDARD DETAIL

TYPE 3
SINGLE CURB ACCESS RAMP
PIMA COUNTY D.O.T. DETAIL

THE SEAL OF PIMA COUNTY ARIZONA

DETAIL NO. 207

SHEET 4 OF 6

207028.DWG 08/02/00 11:12

① ACCESS RAMP CONTROL POINT. (SEE PLANS FOR LOCATION (TYP.))

② DETECTABLE WARNING STRIP 5'x 2' (TYP.) SEE SHT. 6 OF 6

③ ROUGH BROOM FINISH (TYP.)

④ SEE PLANS FOR RADIUS

⑤ BLENDED TRANSITION (TYP.)

⑥ MID-POINT CURB RETURN. OFFSET FROM MID-POINT IS ALLOWED.

CROSS SLOPE 2% MAX

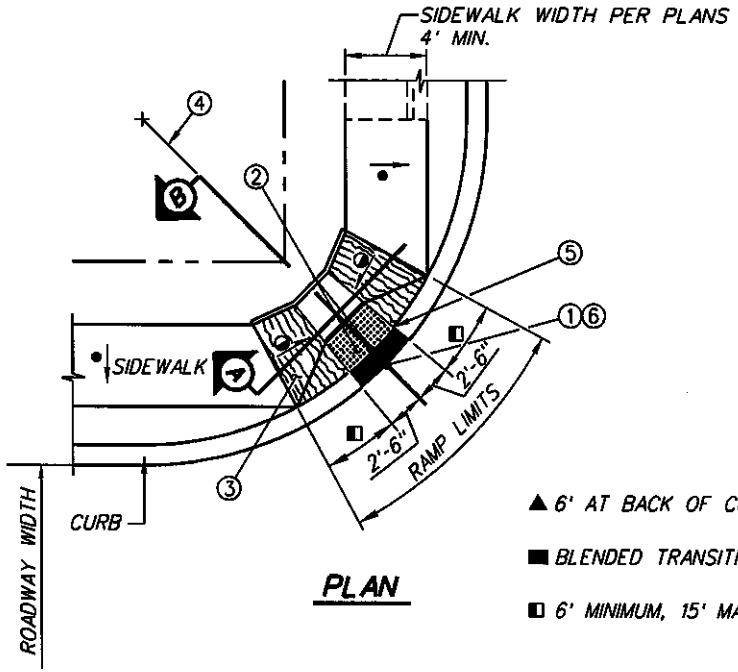

PLAN

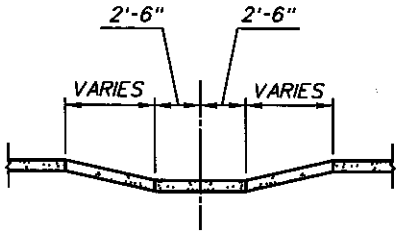

A SECTION

DEPRESSED CURB AT SIDEWALK RAMP

▲ 6' AT BACK OF CURB

■ BLENDED TRANSITION

◧ 6' MINIMUM, 15' MAXIMUM

◑ SLOPE 5% MIN. & 8.33% (12:1) MAX.

GENERAL NOTES:

1. FOR USE ONLY WITHIN LOCAL STREETS AND RESIDENTIAL COLLECTORS WITH A MAXIMUM 2,500 VEHICLES PER DAY AND WHICH IS NOT ADJACENT TO A MAJOR ARTERIAL.
2. SEE SHEET 6 OF 6 FOR ADDITIONAL CONSTRUCTION NOTES.
3. SEE STD. DETAIL 200 FOR JOINT REQUIREMENTS.
4. RAMP JOINTS ALONG RETURNS SHALL BE RADIAL FROM THE BACK OF CURB OR BACK OF DETECTABLE WARNING STRIP.
5. SEE PROJECT PLANS FOR RAMP LOCATION.
6. DRAINAGE INLETS ARE NOT PERMITTED WITHIN CROSSWALKS OR WITHIN 10' OF AN ACCESS RAMP.

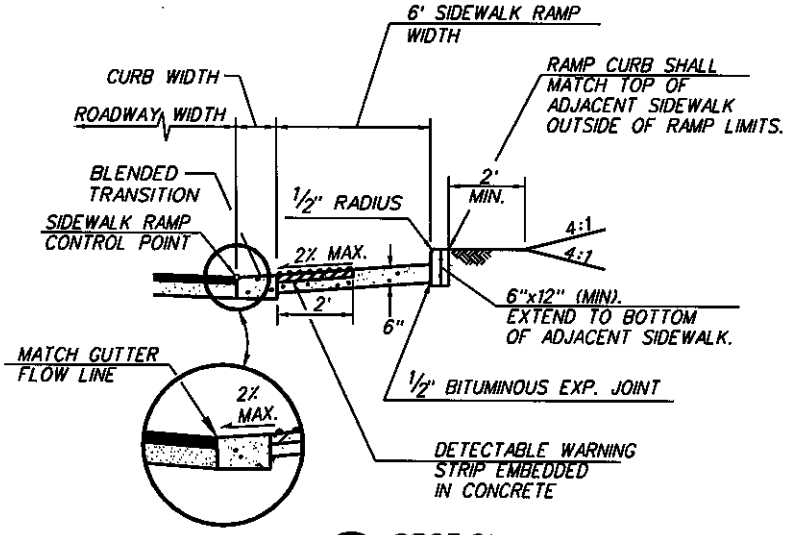

B SECTION

ISSUED:	10/88
REVISED:	11/11

STANDARD DETAIL

TYPE 4
CURB ACCESS RAMP
PIMA COUNTY D.O.T. DETAIL

DETAIL NO. 207

SHEET 5 OF 6

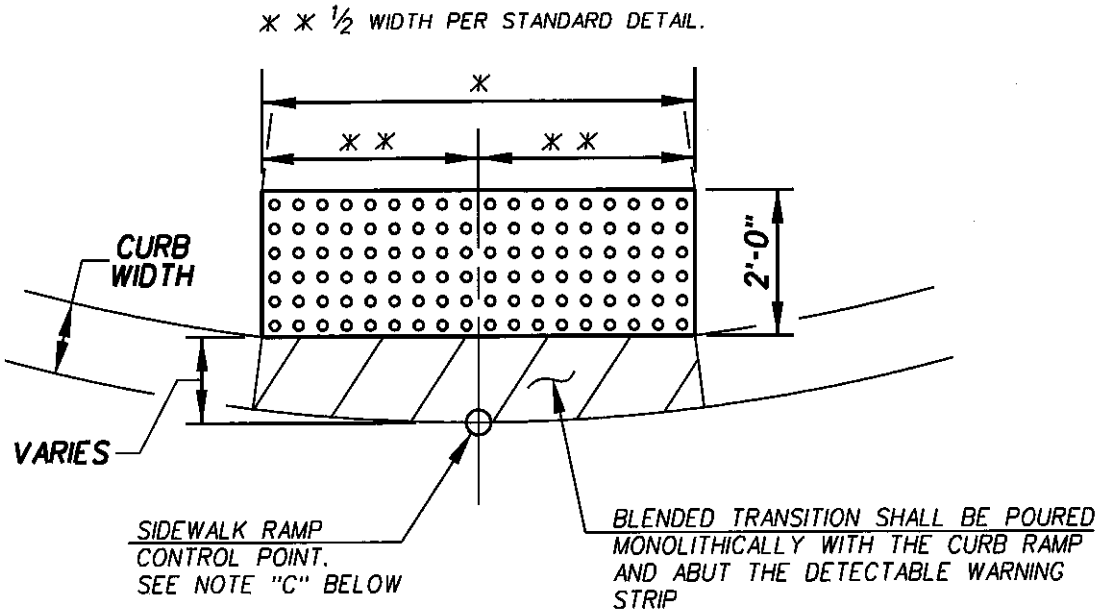

DETECTABLE WARNING STRIP PLAN

CONSTRUCTION NOTES:

(A) SEE STD. DETAIL 200 FOR JOINT REQUIREMENTS.

(B) RAMP SHOULD BE LAID OUT RADIALLY FROM THE BACK OF THE DETECTABLE WARNING STRIP. (EXCEPT FOR TYPE 2 AND TYPE 3 CURB ACCESS RAMP).

(C) SEE PROJECT PLANS FOR RAMP LOCATION. CURB ACCESS RAMPS SHOULD BE ORIENTED TO ALIGN WITH THE CROSSWALK, MEDIAN REFUGE AREA, AND WITH THE OPPOSITE ACCESS RAMPS IN THE DIRECTION OF PEDESTRIAN TRAVEL.

(D) DRAINAGE INLETS ARE NOT PERMITTED WITHIN CROSSWALKS OR WITHIN 10' OF AN ACCESS RAMP.

NOTES FOR DETECTABLE WARNING SURFACE:

1. DETECTABLE WARNINGS SHALL BE EMBEDDED IN CONCRETE, AND SHALL CONSIST OF A SURFACE OF TRUNCATED DOMES ALIGNED IN A SQUARE OR RADIAL GRID PATTERN IN THE DIRECTION OF TRAVEL, AND SHALL COMPLY WITH R304 OF THE DRAFT PUBLIC RIGHTS-OF-WAY ACCESSIBILITY GUIDE LINES.

2. DOME SIZE: TRUNCATED DOMES IN A DETECTABLE WARNING SURFACE SHALL HAVE A BASE DIAMETER OF 0.9 IN. MINIMUM TO 1.4 IN. MAXIMUM, A TOP DIAMETER OF 50 PERCENT OF THE BASE DIAMETER MINIMUM TO 65 PERCENT OF THE BASE DIAMETER MAXIMUM, AND A HEIGHT OF 0.2 IN.

3. DOME SPACING: TRUNCATED DOMES IN A DETECTABLE WARNING SURFACE SHALL HAVE A CENTER-TO-CENTER SPACING OF 1.6 IN. MINIMUM AND 2.4 IN. MAXIMUM, AND A BASE-TO-BASE SPACING OF 0.65 IN. MINIMUM MEASURED BETWEEN THE MOST ADJACENT DOMES.

4. COLOR CONTRAST: DETECTABLE WARNING SURFACES SHALL CONTRAST VISUALLY WITH ADJACENT GUTTER, STREET OR HIGHWAY, OR WALKWAY SURFACE, EITHER RIGHTS-OF-WAY OR BASE-TO-BASE.

5. SIZE: DETECTABLE WARNING SURFACES SHALL EXTEND 24 IN. MINIMUM IN THE DIRECTION OF TRAVEL AND THE FULL WIDTH OF THE CURB RAMP (EXCLUSIVE OF FLARES), THE LANDING, OR THE BLENDED TRANSITION.

6. PREFABRICATED DETECTABLE WARNING STRIP PANELS SHALL BE UTILIZED FOR BOTH NEW CONSTRUCTION AND RETROFIT INSTALLATIONS. SURFACE APPLICATIONS DEPENDENT ON AN ADHESIVE BONDING AGENT(S) AND ANCHORED SYSTEMS ARE NOT APPROVED FOR USE.

ISSUED:		STANDARD DETAIL		DETAIL NO.
04/10	THE SEAL OF PIMA COUNTY ARIZONA	DETECTABLE WARNING STRIP AND CONSTRUCTION NOTES PIMA COUNTY D.O.T. DETAIL	THE SEAL OF PIMA COUNTY ARIZONA	207
REVISED:				
11/11				SHEET 6 OF 6

20701.D.DWG 11/08

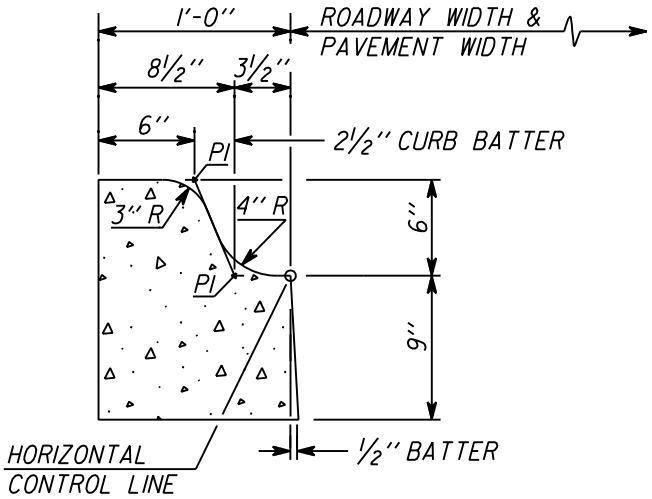

CONCRETE VERTICAL CURB-TYPE (I)

N.T.S.

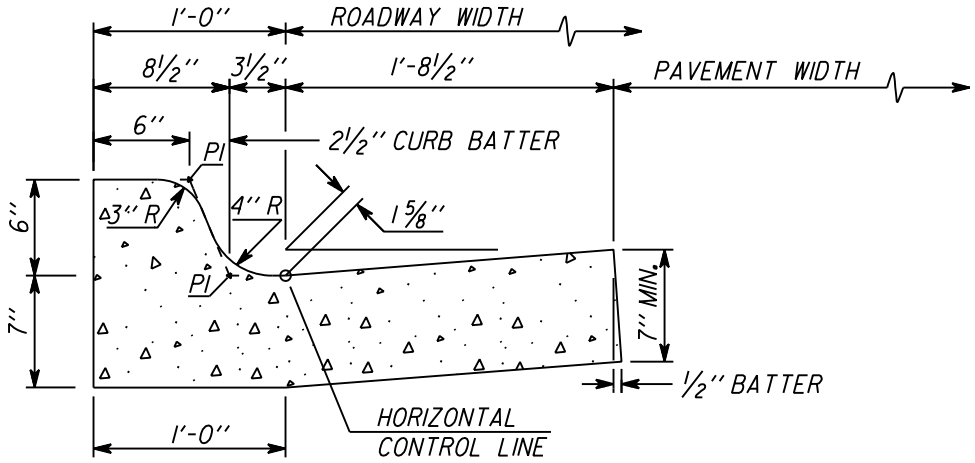

CONCRETE VERTICAL CURB AND GUTTER TYPE - I(G)

N.T.S.

REFER TO NOTES SHEET 3 OF 3

ISSUED:		STANDARD DETAIL		DETAIL NO.
10/88		CONCRETE CURB PIMA COUNTY DOT		209
REVISED:				
08/10				SHEET 1 OF 3

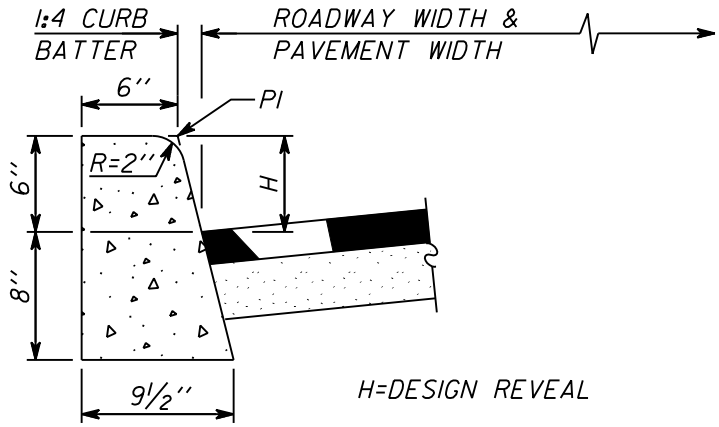

CONCRETE VERTICAL CURB-TYPE 2

N.T.S.

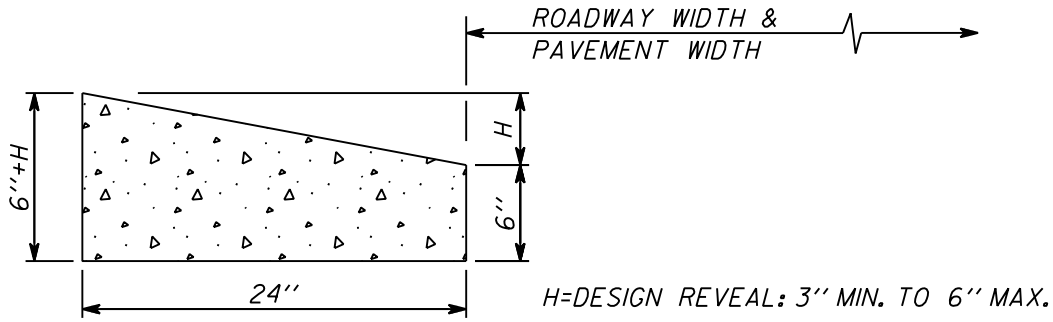

CONCRETE WEDGE CURB

N.T.S.

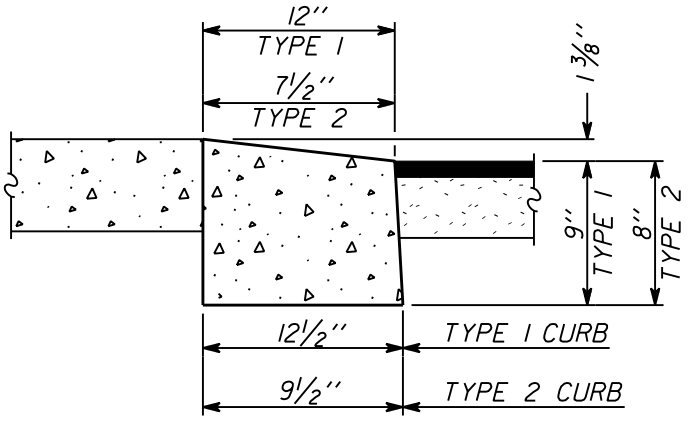

DEPRESSED CURB DETAIL

N.T.S.

REFER TO NOTES SHEET 3 OF 3

ISSUED:		STANDARD DETAIL		DETAIL NO.
10/88		CONCRETE CURB PIMA COUNTY DOT		209
REVISED:				
08/10				SHEET 2 OF 3

NOTES

1. ALL CONCRETE CURBS AND TRANSITIONS, SHALL BE CLASS "B" CONCRETE.

2. MAXIMUM SPACING ON SCORED JOINTS SHALL BE 10 FEET.

3. ONE HALF INCH THICK EXPANSION JOINTS SHALL BE LOCATED AT TANGENT POINTS IN CURB RETURNS, TRANSITIONS, AND AT A MAXIMUM OF 60 FEET INTERVALS. EXPANSION MATERIAL SHALL ALSO BE PLACED BETWEEN CURBS AND ADJACENT STRUCTURES, SIDEWALKS, DRIVEWAYS AND HANDICAP RAMPS. THE 1/2 INCH JOINT FILLER SHALL EXTEND THE FULL DEPTH OF THE CONCRETE.

4. CONCRETE SHALL BE FINISHED WITH A STEEL TROWEL FOLLOWED BY BRUSHING WITH A FINE BRUSH ALONG THE LENGTH OF THE CURB OR CURB AND GUTTER.

5. ALL FLOW LINES OF CONCRETE GUTTERS SHALL BE TROWELED TO AN ACCURATE GRADE.

6. WHEN THE SLOPE OF THE PAVEMENT IS AWAY FROM THE CURB AND GUTTER THE SLOPE OF THE GUTTER SHALL MATCH THE PAVEMENT CROSS SLOPE.

7. THE HEIGHT OF THE WEDGE CURB SHALL BE DETERMINED BY THE DRAINAGE CONTAINMENT REQUIRED.

8. SINGLE CURB AND CURB AND GUTTER MAY BE CONSTRUCTED BY THE USE OF FORMS OR MAY BE SLIP FORMED.

9. ALL EXPOSED EDGES AND HAND TOOLED JOINTS SHALL BE FINISHED WITH A TOOL HAVING A 1/4 INCH RADIUS UNLESS A LARGER RADIUS IS INDICATED BY THE APPLICABLE STANDARD DETAIL OR PROJECT PLANS.

21701PC,MN,T1.DWG 04/09

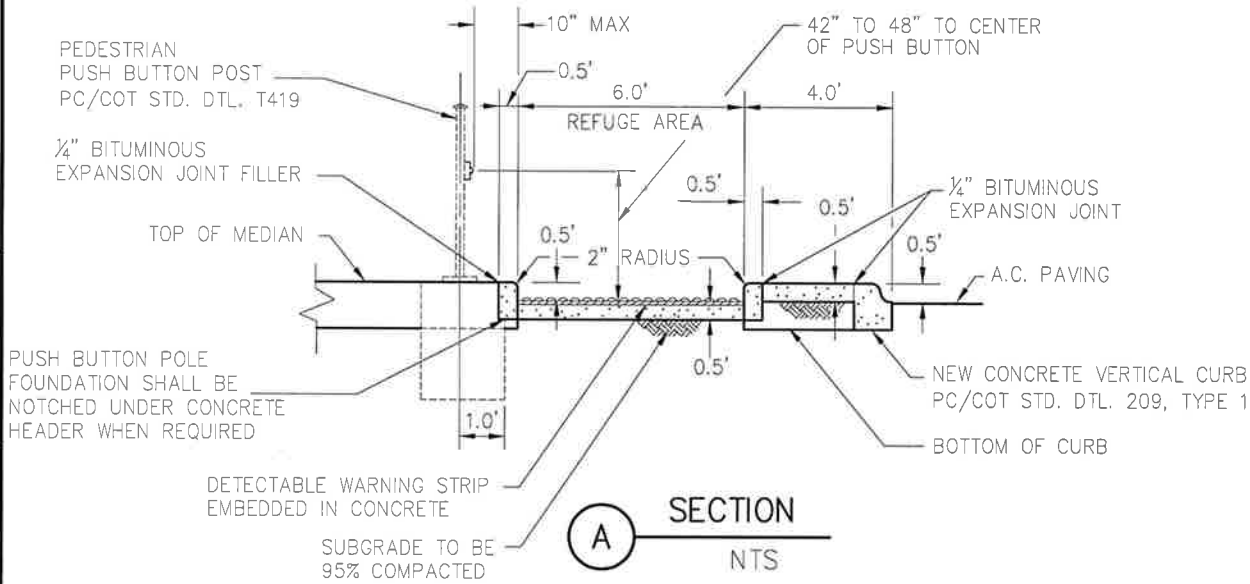

A SECTION
NTS

① DETECTABLE WARNING STRIP 6' x 2' (TYP.) SEE SHT. 3 OF 3

② 6" x 12" CONCRETE HEADER PER PC/COT STD. DTL. 213 WITH 2" RADIUS TROWEL INSIDE EDGE.

BLENDED TRANSITION

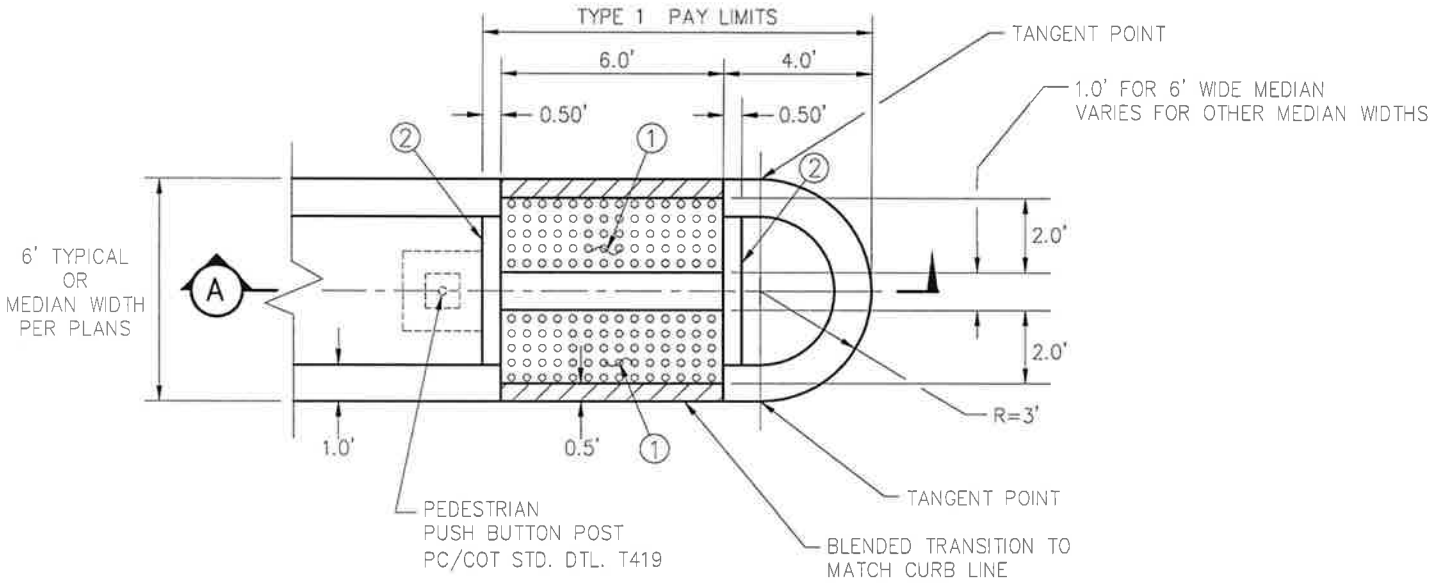

TYPE 1 MEDIAN NOSE
NTS

ISSUED: 04/10
REVISED:

STANDARD DETAIL

MEDIAN NOSE
PIMA COUNTY D.O.T. DETAIL

DETAIL NO. 217

SHEET 1 OF 3

21702PC.MN_T2.DWG 04/09

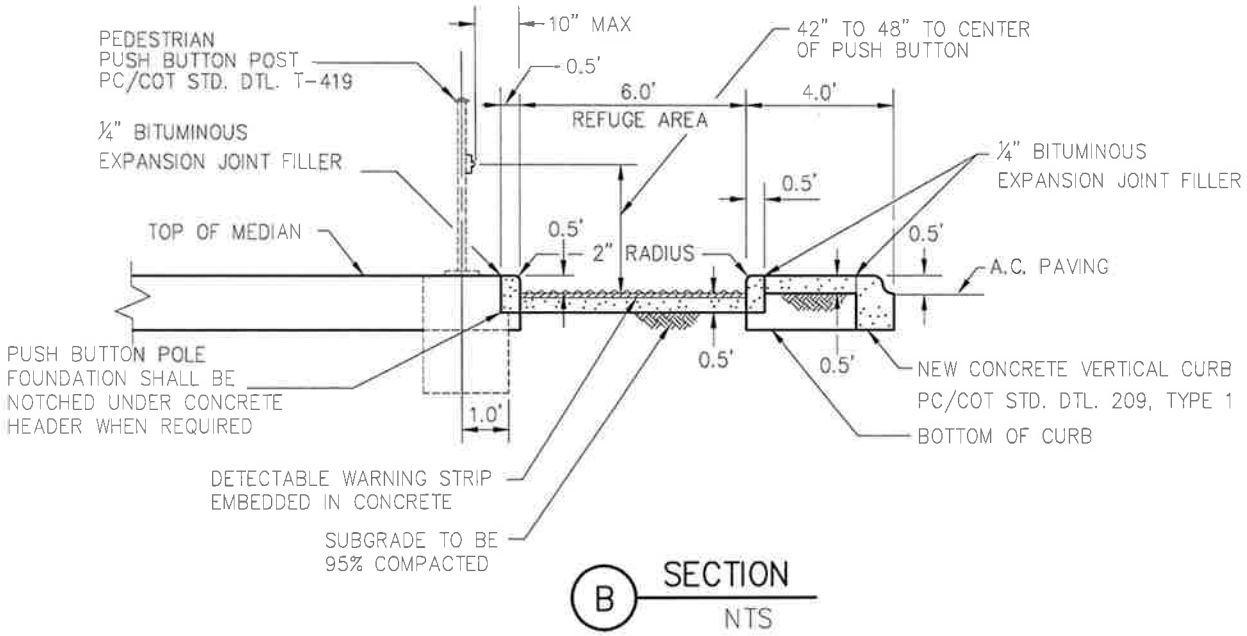

B SECTION
NTS

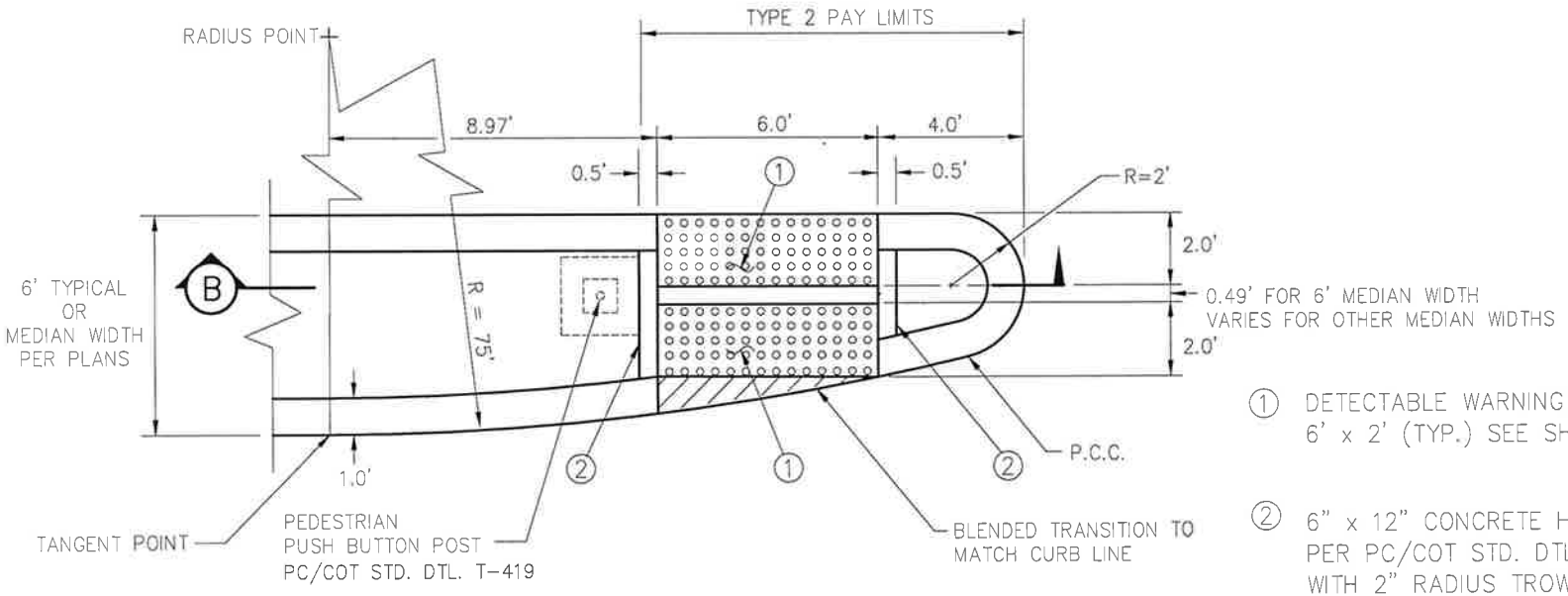

TYPE 2 MEDIAN NOSE
NTS

1 DETECTABLE WARNING STRIP
6' x 2' (TYP.) SEE SHT. 3 OF 3

2 6" x 12" CONCRETE HEADER
PER PC/COT STD. DTL. 213
WITH 2" RADIUS TROWEL
INSIDE EDGE.

BLENDED TRANSITION

ISSUED: 04/10
REVISED:

THE SEAL of PIMA COUNTY ARIZONA

STANDARD DETAIL

MEDIAN NOSE
PIMA COUNTY D.O.T. DETAIL

THE SEAL of PIMA COUNTY ARIZONA

DETAIL NO. 217

SHEET 2 OF 3

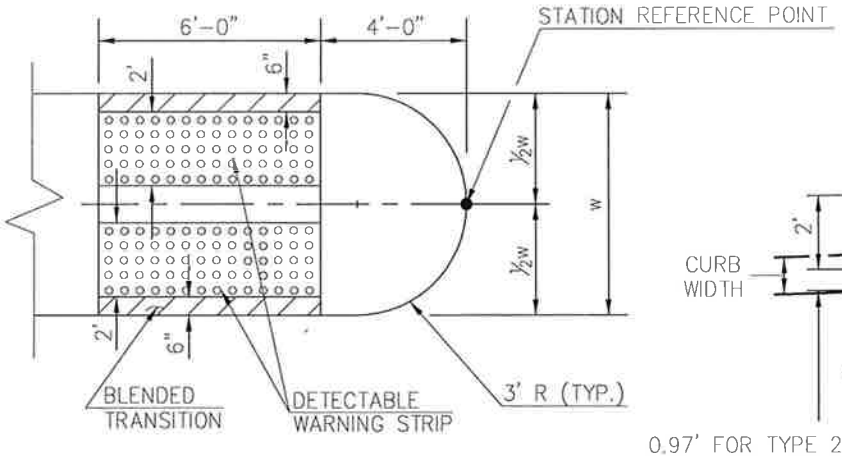

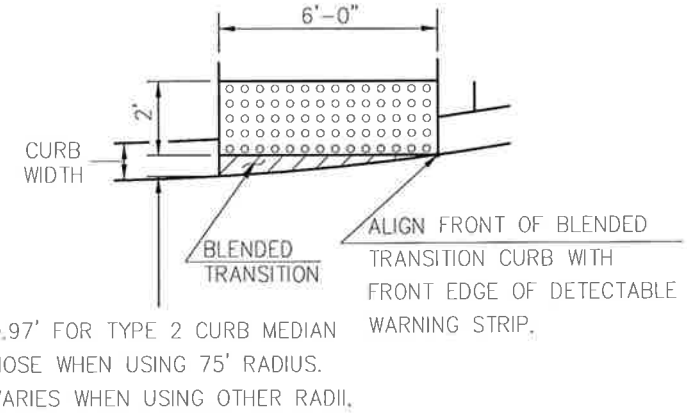

DETECTABLE WARNING STRIP PLAN – TYPE 1 MEDIAN NOSE

DETECTABLE WARNING STRIP PLAN – TYPE 2 MEDIAN NOSE

CONSTRUCTION NOTES:

(A) SEE STD. DETAIL 200 FOR JOINT REQUIREMENTS.

(B) SEE PROJECT PLANS FOR MEDIAN REFUGE AREA LOCATIONS. MEDIAN REFUGE AREA SHOULD BE ORIENTED TO ALIGN WITH THE CROSSWALK, AND WITH THE OPPOSITE ACCESS RAMPS IN THE DIRECTION OF PEDESTRIAN TRAVEL.

(C) DRAINAGE INLETS ARE NOT PERMITTED WITHIN CROSSWALKS OR WITHIN 10' OF A MEDIAN REFUGE AREA.

NOTES FOR DETECTABLE WARNING SURFACE:

1. DETECTABLE WARNINGS SHALL BE EMBEDDED IN CONCRETE, AND SHALL CONSIST OF A SURFACE OF TRUNCATED DOMES ALIGNED IN A SQUARE OR RADIAL GRID PATTERN IN THE DIRECTION OF TRAVEL, AND SHALL COMPLY WITH R304 OF THE DRAFT PUBLIC RIGHTS-OF-WAY ACCESSIBILITY GUIDE LINES.

2. DOME SIZE: TRUNCATED DOMES IN A DETECTABLE WARNING SURFACE SHALL HAVE A BASE DIAMETER OF 0.9 INCHES MINIMUM TO 1.4 INCHES MAXIMUM, A TOP DIAMETER OF 50 PERCENT OF THE BASE DIAMETER MINIMUM TO 65 PERCENT OF THE BASE DIAMETER MAXIMUM, AND A HEIGHT OF 0.2 IN.

3. DOME SPACING: TRUNCATED DOMES IN A DETECTABLE WARNING SURFACE SHALL HAVE A CENTER-TO-CENTER SPACING OF 1.6 IN. MINIMUM AND 2.4 IN. MAXIMUM, AND A BASE-TO-BASE SPACING OF 0.65 IN. MINIMUM MEASURED BETWEEN THE MOST ADJACENT DOMES.

4. COLOR CONTRAST: DETECTABLE WARNING SURFACES SHALL CONTRAST VISUALLY WITH ADJACENT GUTTER, STREET OR HIGHWAY, OR WALKWAY SURFACE, EITHER RIGHTS-OF-WAY OR BASE-TO-BASE.

5. SIZE: DETECTABLE WARNING SURFACES SHALL EXTEND 24 IN. MINIMUM IN THE DIRECTION OF TRAVEL AND THE FULL WIDTH OF THE MEDIAN REFUGE AREA, LANDING, OR THE BLENDED TRANSITION.

6. PREFABRICATED DETECTABLE WARNING STRIP PANELS SHALL BE UTILIZED FOR BOTH NEW CONSTRUCTION AND RETROFIT INSTALLATIONS. SURFACE APPLICATIONS DEPENDENT ON AN ADHESIVE BONDING AGENT(S) AND ANCHORED SYSTEMS ARE NOT APPROVED FOR USE.

ISSUED:		STANDARD DETAIL		DETAIL NO.
04/10		DETECTABLE WARNING STRIP AND CONSTRUCTION NOTES PIMA COUNTY D.O.T. DETAIL		217
REVISED:				SHEET 3 OF 3

20701.D.DWG 04/09