EL RIO PRESERVE
BANK PROTECTION
PCRFCD PROJECT No. 5LKMNA
100% PLANS

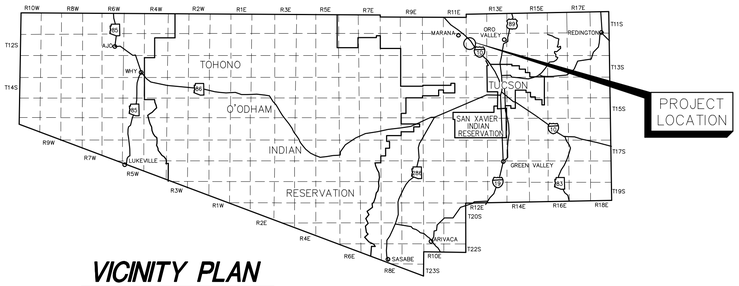

VICINITY PLAN

GENERAL DESCRIPTION OF PROJECT

THIS PROJECT WILL INCLUDE GRADING AND CONSTRUCTION OF ±3,475 L.F. OF SOIL CEMENT BANK PROTECTION

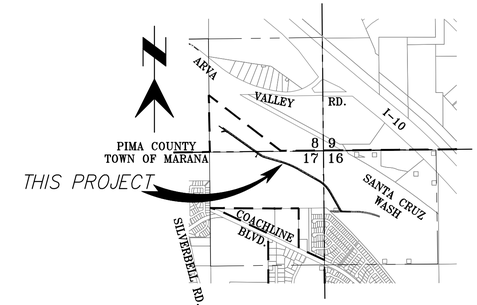

LOCATION MAP

Portion of Sections 8, 16 & 17
T-12-S, R-12-E, G & S R M
City of Marana, Pima County, Arizona
Scale: 3"=1 Mile

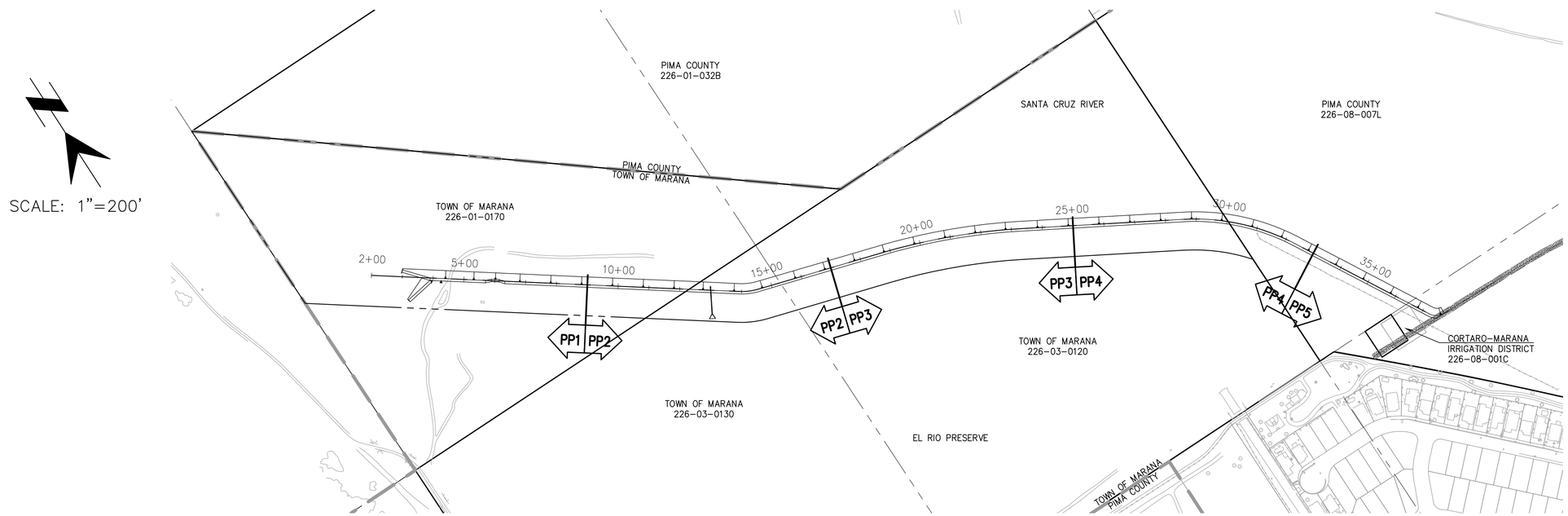

PROJECT INDEX MAP

SHEET INDEX

SHEET NO.	PAGE NO.	SHEET DESCRIPTION
CS1	1	COVER SHEET
GN1–GN2	2–3	GENERAL NOTES
NR1–NR2	4–5	NEW RIGHT-OF-WAY SHEET
TS1	6	TYPICAL SECTIONS
CD1–CD4	7–10	CIVIL DETAILS
PP1–PP5	11–15	PLAN AND PROFILE SHEET
GR1–GR2	16–17	GRADING PLANS
SW1–SW5	18–22	STORMWATER POLLUTION PREVENTION PLANS
XS1–XS3	1–3	CROSS-SECTIONS (N.I.C.)

PIMA COUNTY

PIMA COUNTY BOARD OF DIRECTORS

RICHARD ELIAS	CHAIR	DISTRICT 5
ALLY MILLER	MEMBER	DISTRICT 1
RAMON VALADEZ	MEMBER	DISTRICT 2
SHARON BRONSON	MEMBER	DISTRICT 3
STEVE CHRISTY	MEMBER	DISTRICT 4

THIS PROJECT IS LOCATED IN SUPERVISOR DISTRICT 3

PIMA COUNTY FLOOD CONTROL

PSOMAS
333 E. Wetmore Road, Suite 450
Tucson, AZ 85705
(520) 292-2300 (520) 292-1290 fax
www.psomas.com

NO.	REVIEWED BY	ENGINEER	DATE
NO.	AS BUILT	ENGINEER	DATE

Registered Professional Engineer (Civil) CERTIFICATE NO. 46896 KEVIN U. LETENDRE Date Signed 10/31/25 ARIZONA U.S.A. Expires 09/30/26

PIMA COUNTY REGIONAL FLOOD CONTROL DISTRICT

201 N. STONE AVE., 9th FLOOR TUCSON, ARIZONA 85701

SUZANNE SHIELDS, P.E., DIRECTOR

REVIEWED BY	ENGINEER	DATE
MGR. DESIGN ENGR.		
MGR. FIELD ENGR.		

APPROVED _____20__

DIRECTOR

SCALES: HORIZ.: AS SHOWN VERT.: N/A

SHEET CS1 OF CS1

PAGE 1 OF 22

GENERAL NOTES:

1. ALL CONSTRUCTION AND TEST METHODS SHALL BE IN CONFORMANCE WITH PIMA ASSOCIATION OF GOVERNMENTS (PAG) STANDARD SPECIFICATIONS AND DRAWINGS, 2015 EDITION, EXCEPT AS MODIFIED BY THE CONTRACT.

2. UTILITY LOCATIONS SHOWN ON PLANS WERE COMPILED BASED ON RECORD DRAWINGS FROM THE TUCSON WATER DEPARTMENT AND THE PIMA COUNTY REGIONAL WASTEWATER RECLAMATION DEPARTMENT. ADDITIONAL SYSTEM MAPS WERE USED FOR THE LOCATION OF DRY UTILITIES. THE CONTRACTOR SHALL VERIFY THE LOCATION OF ALL UTILITIES WITH THE APPROPRIATE ORGANIZATIONS. CONTACT "ARIZONA 811" AT 811 OR AT ARIZONA811.COM TWO FULL WORKING DAYS PRIOR TO BEGINNING CONSTRUCTION. THE CONTRACTOR SHALL NOTIFY PIMA COUNTY IN WRITING OF ANY UTILITY LOCATIONS DISCOVERED DIFFERING FROM THE PLAN INFORMATION IN A TIMELY MANNER.

3. RIGHT OF WAY ENCROACHMENTS SHALL BE REMOVED ONLY BY THE ORDER OF PIMA COUNTY, UNLESS OTHERWISE NOTED.

4. REMOVAL OF ALL CACTI AND NATIVE PLANTS SHALL BE IN ACCORDANCE WITH THE PROVISIONS OF THE "ARIZONA NATIVE PLANT LAW", A.R.S., CHAPTER 7. (ARS SECTION 3-901, ET. SEQ.) AND THE PIMA COUNTY NATIVE PLANT PRESERVATION ORDINANCE.

5. THE CONTRACTOR SHALL COMPLY WITH ALL APPLICABLE OCCUPATIONAL SAFETY AND HEALTH ADMINISTRATION REGULATIONS, IN PARTICULAR SHORING OF TRENCHES.

6. THE CONTRACTOR SHALL OBTAIN ALL PERMITS REQUIRED BY ALL GOVERNMENTAL AGENCIES. SINCE THIS PROJECT IS IN CITY OF TUCSON, THE CONTRACTOR WILL BE REQUIRED TO OBTAIN A GRADING PERMIT, FLOODPLAIN USE PERMIT AND TRAFFIC CONTROL PERMIT FROM THE CITY PRIOR TO CONSTRUCTION. FOR WORK BEYOND THE SCOPE OF THESE PROJECT LIMITS, PLANS OR SPECIFICATIONS, THE CONTRACTOR SHALL OBTAIN A SEPARATE FLOODPLAIN AND/OR GRADING PERMIT PRIOR TO COMMENCING SUCH WORK.

7. SOILS INFORMATION WILL BE MADE AVAILABLE TO PROSPECTIVE BIDDERS. SOILS INFORMATION SO PROVIDED SHALL BE FOR INFORMATION PURPOSES ONLY AND IS NOT TO BE CONSIDERED A PART OF THE CONTRACT DOCUMENTS. THIS INFORMATION WAS DEVELOPED AS ACCURATELY AS POSSIBLE BY UTILIZING STANDARD METHODS. PIMA COUNTY ACCEPTS NO RESPONSIBILITY FOR ANY CONDITIONS ENCOUNTERED WHICH VARY FROM INFORMATION PROVIDED.

8. CONTOUR LINES ON THE GRADING PLAN ARE TO USED FOR ROUGH GRADING. SPECIFIC SPOT ELEVATIONS ARE TO BE USED FOR FINAL GRADING AND CONSTRUCTION.

9. THE CONTRACTOR SHALL PRESERVE ALL STAKES SET FOR THE LINES, LEVELS OR MEASUREMENTS OF THE WORK IN THEIR PROPER PLACES UNTIL AUTHORIZED TO REMOVE THEM BY THE OWNER OR HIS REPRESENTATIVE. ANY EXPENSE INCURRED IN REPLACING ANY STAKES WHICH THE CONTRACTOR OR HIS SUBORDINATES MAY HAVE FAILED TO PRESERVE SHALL BE CHARGED TO THE CONTRACTOR.

10. EXISTING VEGETATION BEYOND THE LIMITS OF GRADING WILL BE PRESERVED IN PLACE. PRIOR TO GRADING, THE CONTRACTOR SHALL STAKE THE GRADING LIMITS AND CONDUCT A FIELD VISIT WITH THE ENGINEER AT WHICH TIME EXISTING VEGETATION THAT IS TO BE PRESERVED IN PLACE SHALL BE AGREED UPON AND CLEARLY MARKED. EXISTING VEGETATION OUTSIDE THE LIMITS OF GRADING THAT IS DAMAGED BY CONSTRUCTION ACTIVITIES SHALL BE REPLACED BY THE CONTRACTOR AT NO ADDITIONAL EXPENSE TO THE OWNER. DAMAGED VEGETATION SHALL BE REPLACED WITH THE SAME SPECIES AND AT THE SAME SIZE OR LARGER. ADDITIONALLY, VEGETATION WITHIN THE GRADING LIMITS WHICH CAN BE PROTECTED IN PLACE WITH REASONABLE EFFORT, IS NOT IN CONFLICT WITH PROPOSED IMPROVEMENTS, AND DOES NOT POSE A SIGNIFICANT IMPEDIMENT TO CONSTRUCTION ACTIVITIES SHALL BE IDENTIFIED PRIOR TO COMMENCEMENT OF GRADING ACTIVITIES AND MARKED ACCORDINGLY.

11. PROTECTION FENCE (PENDANT) TO BE UTILIZED ON DISTURBANCE LIMITS AND TO BE MAINTAINED THROUGHOUT PROJECT DURATION ON ALL LIMITS UNTIL PERMANENT BOUNDARIES (POST AND CABLE FENCE) ARE INSTALLED OR JOB IS COMPLETED.

HORIZONTAL CONTROL

THIS PROJECT UTILIZES THE ARIZONA COORDINATE SYSTEM, 1983 (ACS 83), NAD83 (HARN 92), INTERNATIONAL FEET, AND IS LOCATED IN THE CENTRAL ZONE. THE CONTROL NETWORK WAS SURVEYED IN MAY, 2018 USING TRIMBLE GPS UNITS UTILIZING RTK METHODS AND INCORPORATED THE FOLLOWING CONTROL POINTS:

STATION	(REFERENCE)	
J09	(PIMA CTY. OPUS CTRL.)	* PRIMARY CONTROL POINT
G05	(PIMA CTY. OPUS CTRL.)	
NN 121	CZ2524 (NGS)	
H 140	CZ0522 (NGS)	

SURFACE COORDINATES AND/OR DISTANCES WERE COMPUTED FROM THE ACS 83 COORDINATES BY APPLYING A PROJECT SPECIFIC GRID TO A SURFACE COMBINED ELEVATION AND SCALE FACTOR (CF) AT A CENTRAL POINT (NCP/ECP); COORDINATES WERE NOT TRUNCATED:

NP LOC = (NP ACS83 – NCP ACS83) * CF + NCP ACS83

EP LOC = (EP ACS83 – ECP ACS83) * CF + ECP ACS83

WHERE: NP LOC = LOCAL NORTH NP ACS83 = ACS 83 NORTH
NCP ACS83 = ACS 83 AT CENTRAL POINT
EP LOC = LOCAL EAST EP ACS83 = ACS 83 EAST
ECP ACS83 = ACS 83 AT CENTRAL POINT

COMBINED FACTOR (CF) = 1.0001278096

N 508803.790 (ACS83) E 942315.108 (ACS83) *CENTRAL POINT

VERTICAL CONTROL

The vertical datum for this project is the North American Vertical Datum, 1988 (NAVD88). The bench marks used for this project were:

Station	Reference	Elevation	
H 140	CZ0522 (NGS)	2089.95	
B 424	CZ1431 (NGS)	2073.34	* Project Benchmark

Note: Orthometric heights (elevations) were derived from GPS ellipsoid height measurements and the application of a high-resolution hybrid geoid model, Geoid 12A.

Contact Arizona 811 at least two full working days before you begin excavation
ARIZONA811
Call 811 or click Arizona811.com

SCALES: HORIZ. N/A VERT. N/A

SHEET GN1 OF GN2

PAGE 2 OF 22

SUZANNE SHIELDS, P.E., DIRECTOR

NO.	REVISION DESCRIPTION	DIV. ENGINEER	DATE

		DATE
DESIGNED:	CR	1/2020
DRAWN:	CR/KL/EA	1/2020
CHECKED:	KL	1/2020
PROJ. ENG.:	CR	1/2020

Registered Professional Engineer (Civil) 46896 KEVIN U. LETENDRE Date Signed 7/21/20 ARIZONA, U.S.A. Series 09/12

PSOMAS
333 E. Wetmore Road, Suite 450
Tucson, Arizona 85705
(520) 792-2300 (520) 292-1290 (FAX)

PIMA COUNTY REGIONAL FLOOD CONTROL DISTRICT

GENERAL NOTES
FOR
EL RIO PRESERVE
BANK PROTECTION

PIMA COUNTY W.O. 5LKMNA

T:\7PFC180101\ENGR\SHEETS\PHASE I PLANS\Cover Sheet And Notes\NT1-2.dwg GN1 Last Saved: Tue, 21 Jan 2020 By: Chelsi.remme Plotted: Tuesday, January 21, 2020 12:38:01 PM

EARTHWORK QUANTITIES

APPROXIMATE EARTHWORK QUANTITIES*	
SOIL CEMENT QUANTITIES	
SOIL CEMENT (IN-PLACE)	25003
SHRINKAGE AND SCREENING ADJUSTMENT (15%)	3750
NEAT LINE AND TRIMMING ADJUSTMENT (7%)	1750
REQUIRED AGGREGATE FOR SOIL CEMENT	30503
BACKFILL QUANTITIES	
EMBANKMENT AND GENERAL BACKFILL (IN-PLACE)	184
SHRINKAGE AND SCREENING ADJUSTMENT (10%)	2
REQUIRED AGGREGATE FOR BACKFILL	186
TOTAL REQUIRED AGGREGATE	30689
AGGREGATE SOURCES	
DRAINAGE EXCAVATION	36262
STRUCTURAL EXCAVATION	----
TOTAL AVAILABLE AGGREGATE	36262

*ALL QUANTITIES IN CUBIC YARDS IN PLACE

NOTE: THE QUANTITIES ABOVE ARE APPROXIMATE AND MAY VARY SIGNIFICANTLY DEPENDING ON FIELD CONDITIONS. EXISTING FILL WILL BE PLACED AS PART OF CHANNEL MAINTENANCE UNDER A SEPARATE PROJECT. THE PRECISE NATURE OF THE MATERIAL ENCOUNTERED DURING CONSTRUCTION. GEOTECHNICAL ANALYSIS WAS COMPLETED ON MATERIALS WITHIN THE PROJECT LIMITS. HOWEVER, THE RESULTS OF THE ANALYSIS AS WELL AS FIELD OBSERVATIONS INDICATE CONDITIONS VARY WIDELY OVER THE PROJECT EXTENTS.

LEGEND

NEW	EXISTING	FEATURE
	8" S	SANITARY SEWER
	OHE	OVERHEAD ELECTRIC LINE
	BSE	UNDERGROUND ELECTRIC LINE (BLUESTAKE)
	W	WATER MAIN & VALVE
	BSG	GAS MAIN (BLUESTAKE)
	IV	IRRIGATION CONTROL VALVE
	ECB	ELECTRICAL BOX
	EM	ELECTRIC METER
	TS	TRAFFIC SIGNAL
	SL	SIGNAL LIGHT
		LIGHT POLE
		WATER METER BOX
100		HORIZ./VERT. CONTROL POINT
		FLOW ARROW
	2 1 / 11 12	SECTION CORNERS
FG		FINISHED GRADE
2965	2965	CONTOUR LINE
X	X	Barricade Railing
		Post & Cable
		Direction of Slope
		Utility Pole
		Sign
		Survey Monument
		Benchmark
		Section Line & Corner
C		Cut Limits
F		Fill Limits
		Preservation Fencing
		100 Year WSE
	PL	Property Line
		Survey Control Line
		Existing Ground Profile
		Finished Flowline
		Temp. Construction Esmt. (TCE)
		R/W Line
XX.XX		Finished Grade Elevation

Contact Arizona 811 at least two full working days before you begin excavation
ARIZONA811
Call 811 or click Arizona811.com

SCALES: HORIZ. N/A VERT. N/A | SHEET GN2 OF GN2 | PAGE 3 OF 22

SUZANNE SHIELDS, P.E., DIRECTOR

NO.	REVISION DESCRIPTION	DIV. ENGINEER	DATE

		DATE
DESIGNED:	CR	1/2020
DRAWN:	CR/KL/EA	1/2020
CHECKED:	KL	1/2020
PROJ. ENG.:	CR	1/2020

Registered Assured Water Supply Provider (Civil) 46896 KEVIN LI LETENDRE Date Signed 1/21/20 Expires 6/30/20

PSOMAS
333 E. Wetmore Road, Suite 450
Tucson, Arizona 85705
(520) 292-2300 (520) 292-1290 (FAX)

PIMA COUNTY REGIONAL FLOOD CONTROL DISTRICT

GENERAL NOTES FOR EL RIO PRESERVE BANK PROTECTION

PIMA COUNTY W.O. 5LKMNA

T:\PFC180101\ENGR\SHEETS\PHASE I PLANS\Cover Sheet And Notes\NT1-2.dwg GN2 Last Saved: Tue, 21 Jan 2020 By: Chelsi.remme Plotted: Tuesday, January 21, 2020 12:38:04 PM

SCALES: HORIZ. 1"=150' VERT. N/A

SHEET NR1 OF NR2

PAGE 4 OF 22

SUZANNE SHIELDS, P.E., DIRECTOR

DESIGNED:	CR	1/2020
DRAWN:	CR/KL/EA	1/2020
CHECKED:	KL	1/2020
PROJ. ENG.:	CR	1/2020

NO.	REVISION DESCRIPTION	DIV. ENGINEER	DATE

Registered Professional Engineer (Civil) CERTIFICATE NO. 46896 KEVIN LL LETENDRE Date Signed 1-21-20 Expires 6/30/20 Arizona U.S.A.

PSOMAS
333 E. Wetmore Road, Suite 450
Tucson, Arizona 85705
(520) 292-2300 (520) 292-1290 (FAX)

PIMA COUNTY REGIONAL FLOOD CONTROL DISTRICT

NEW RIGHT-OF-WAY SHEET
FOR
EL RIO PRESERVE
BANK PROTECTION

PIMA COUNTY W.O. 5LKMNA

T:\PFC180101\ENGR\SHEETS\PHASE I PLANS\Right-of-Way\RW1.dwg RW1 Last Saved: Tue, 21 Jan 2020 By: Chelsi.remme Plotted: Tuesday, January 21, 2020 12:38:28 PM

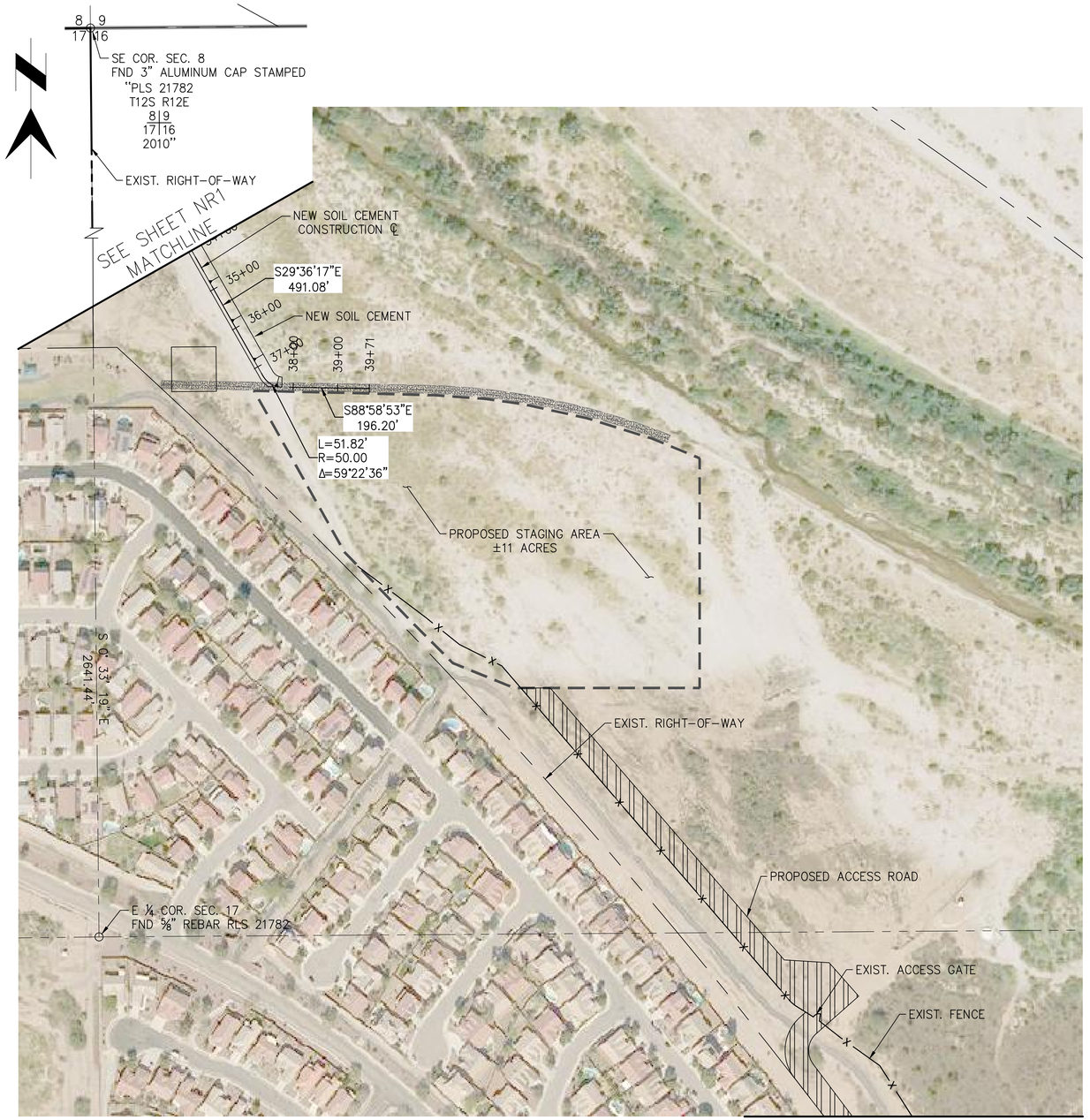

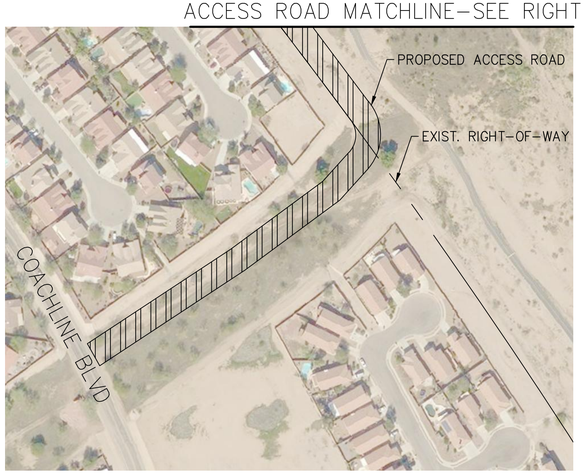

NOTE:
CONTRACTOR TO COORDINATE WITH CMID FOR CONSTRUCTION WATER.

Contact Arizona 811 at least two full working days before you begin excavation
ARIZONA811
Call 811 or click Arizona811.com

SCALES:	HORIZ. 1"=150'
	VERT. N/A

SHEET NR2 OF NR2

PAGE 5 OF 22

SUZANNE SHIELDS, P.E., DIRECTOR

		DATE
DESIGNED:	CR	1/2020
DRAWN:	CR/KL/EA	1/2020
CHECKED:	KL	1/2020
PROJ. ENG.:	CR	1/2020

NO.	REVISION DESCRIPTION	DIV. ENGINEER	DATE

Registered Professional Engineer (Civil) CERTIFICATE NO. 46896 KEVIN LI LETENDRE Date Signed 1/21/20 Expires 6/30/20

PSOMAS
333 E. Wetmore Road, Suite 450
Tucson, Arizona 85705
(520) 292-2300 (520) 292-1290 (FAX)

PIMA COUNTY REGIONAL FLOOD CONTROL DISTRICT

NEW RIGHT-OF-WAY SHEET
FOR
EL RIO PRESERVE
BANK PROTECTION

PIMA COUNTY W.O. 5LKMNA

T:\PFC18010\ENGR\SHEETS\PHASE I PLANS\Right-of-Way\RW1.dwg RW2 Last Saved: Tue, 21 Jan 2020 By: Chelsi.remme Plotted: Tuesday, January 21, 2020 12:38:43 PM

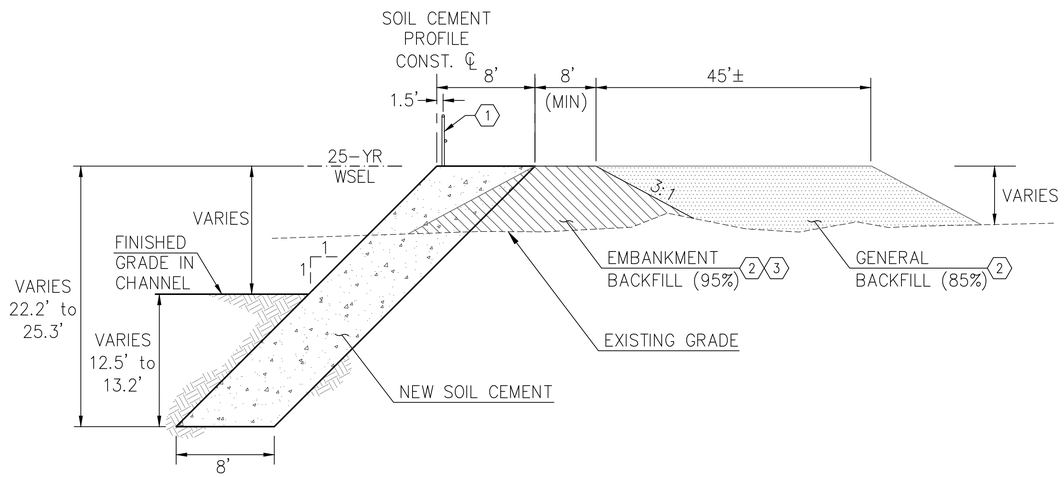

A TYPICAL SOIL CEMENT SECTION
STA 4+85 TO STA 29+90
NTS

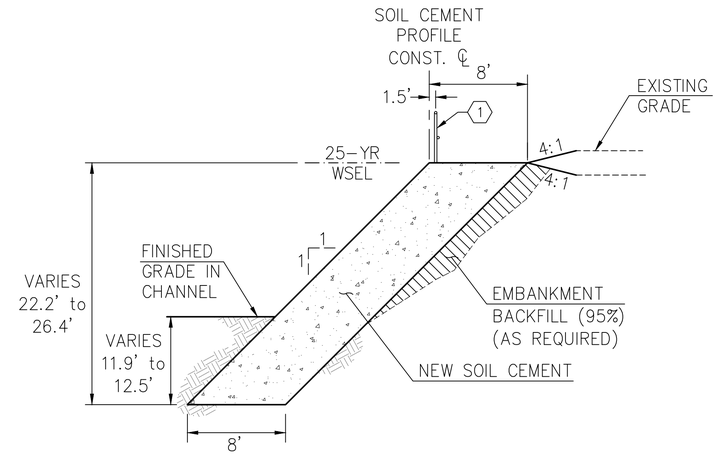

B TYPICAL SOIL CEMENT SECTION
STA 3+00 TO STA 4+85
STA 29+90 TO STA 37+75
NTS

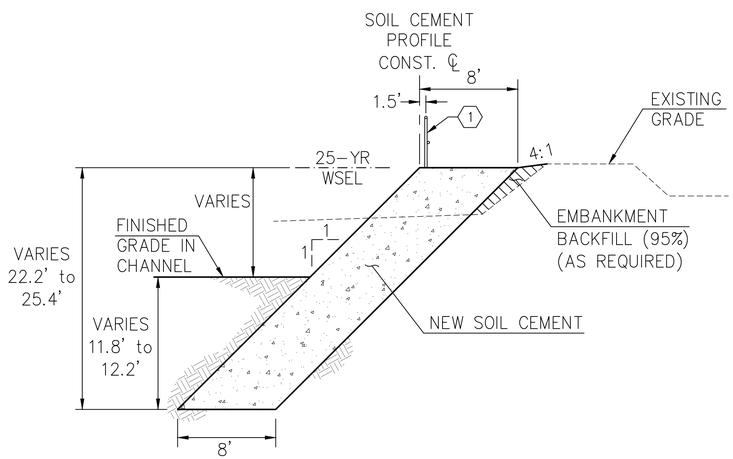

C TYPICAL SOIL CEMENT SECTION
NTS

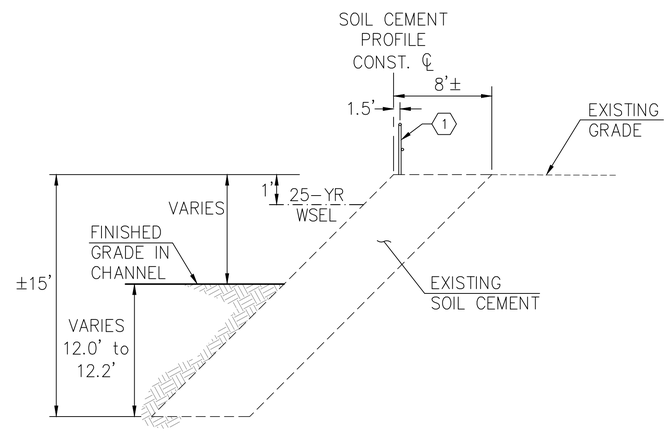

D TYPICAL SOIL CEMENT SECTION
NTS

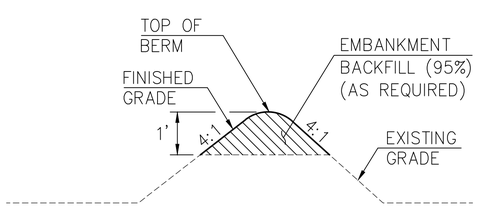

E TYPICAL SOIL CEMENT SECTION
NTS

KEYNOTES:

1. NEW BARRICADE RAILING PER PC/COT STD. DTL. 105
2. FILL MATERIAL TO BE PLACED PRIOR TO SOIL CEMENT CONSTRUCTION AS PART OF SANTA CRUZ RIVER MAINTENANCE PROJECT. 3:1 SLOPE TO BE CUT BACK TO ACCOMMODATE SOIL CEMENT.
3. EXISTING EMBANKMENT BACKFILL SHALL BE TESTED TO VERIFIED 95% COMPACTION. IF BACKFILL DOES NOT MEET MINIMUM COMPACTION THE MATERIAL SHALL BE REMOVED AND RECOMPACTED TO 95%.

NOTE: DUE TO VARYING CONDITIONS, TYPICAL SECTION STATIONING AND DIMENSIONING ARE APPROXIMATE AND ALL CONDITIONS ARE NOT REPRESENTED. SEE PLAN AND PROFILE, AND DETAIL SHEETS FOR SPECIFIC DESIGN INFORMATION.

Contact Arizona 811 at least two full working days before you begin excavation
ARIZONA811
Call 811 or click Arizona811.com

DESIGNED:	CR		DATE
DRAWN:	CR/KL/EA		1/2020
CHECKED:	KL		1/2020
PROJ. ENG.:	CR		1/2020
			1/2020

SUZANNE SHIELDS, P.E., DIRECTOR

NO.	REVISION DESCRIPTION	DIV. ENGINEER	DATE

REGISTERED PROFESSIONAL ENGINEER (CIVIL) 46896 KEVIN J. LETENDRE Date Signed 1/2/20 ARIZONA U.S.A. Expires 6/30/20

PSOMAS
333 E. Wetmore Road, Suite 450
Tucson, Arizona 85705
(520) 292-2200 (520) 292-1290 (FAX)

PIMA COUNTY REGIONAL FLOOD CONTROL DISTRICT

TYPICAL SECTIONS
FOR
EL RIO PRESERVE
BANK PROTECTION

PIMA COUNTY W.O. 5LKMNA

SCALES: HORIZ. N/A VERT. N/A

SHEET TS1 OF TS1

PAGE 6 OF 22

T:\7PFC180101\ENGR\SHEETS\PHASE I PLANS\Typical Sections\TS1.dwg TS1 Last Saved: Tue, 21 Jan 2020 By: Chelsi.remme Plotted: Tuesday, January 21, 2020 12:38:45 PM

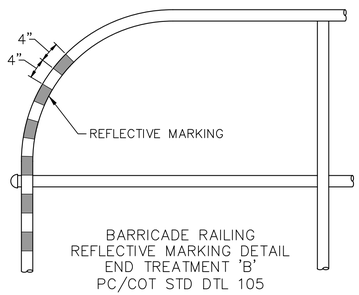

A BARRICADE END TREATMENT AND MARKINGS
END TREATMENT 'A' – PC/COT STD DTL 105

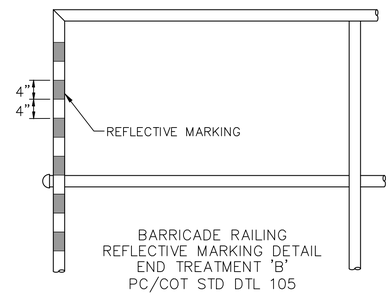

B BARRICADE END TREATMENT AND MARKINGS
END TREATMENT 'B' – PC/COT STD DTL 105

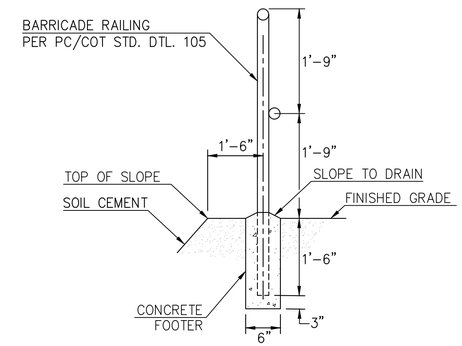

C BARRICADE RAILING IN SOIL CEMENT
MOFIFIED PC/COT STD DTL 105

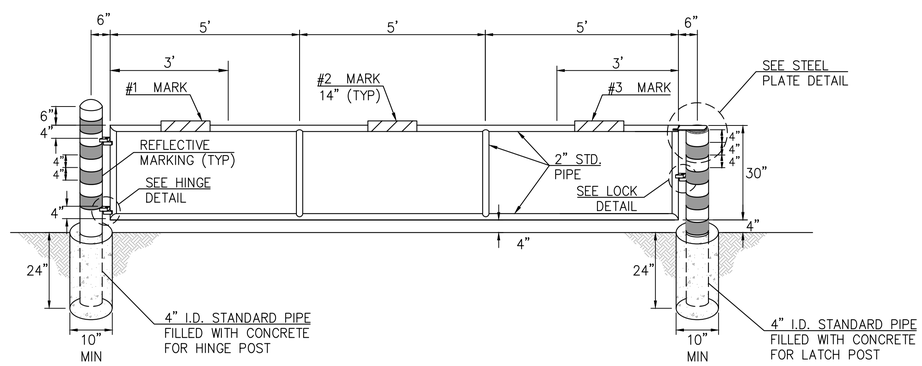

D TYPICAL ACCESS GATE

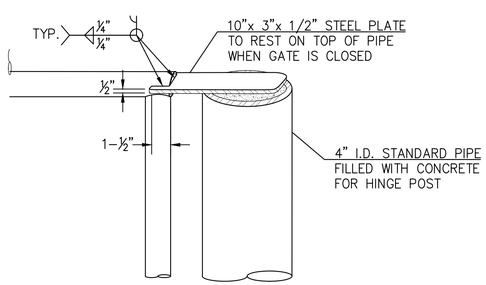

STEEL PLATE DETAIL
NTS

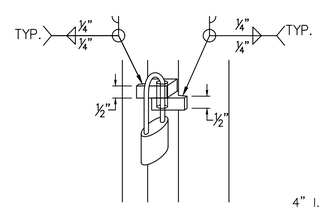

LOCK DETAIL
NTS

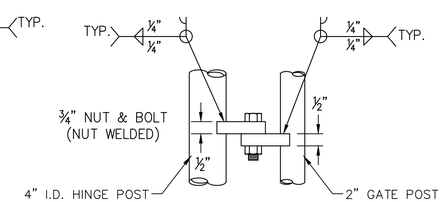

HINGE DETAIL
NTS

Contact Arizona 811 at least two full working days before you begin excavation
ARIZONA811
Call 811 or click Arizona811.com

SUZANNE SHIELDS, P.E., DIRECTOR

		DATE
DESIGNED:	CR	1/2020
DRAWN:	CR/KL/EA	1/2020
CHECKED:	KL	1/2020
PROJ. ENG.:	CR	1/2020

NO.	REVISION DESCRIPTION	DIV. ENGINEER	DATE

Registered Professional Engineer (Civil) CERTIFICATE NO. 46896 KEVIN LL LETENDRE Date Signed 1/21/20 ARIZONA U.S.A. Expires 6/30/20

PSOMAS
333 E. Wetmore Road, Suite 450
Tucson, Arizona 85705
(520) 292-2300 (520) 292-1290 (FAX)

PIMA COUNTY REGIONAL FLOOD CONTROL DISTRICT

CIVIL DETAILS
FOR
EL RIO PRESERVE
BANK PROTECTION

PIMA COUNTY W.O. 5LKMNA

SCALES:	HORIZ. N/A	SHEET CD1 OF CD4	PAGE 7 OF 22
	VERT. N/A		

T:\7PFC180101\ENGR\SHEETS\PHASE I PLANS\Civil Details\CD1.dwg CD1 Last Saved: Tue, 21 Jan 2020 By: Chelsi.remme Plotted: Tuesday, January 21, 2020 12:39:01 PM

NOTES:

1. GRIND SMOOTH ALL WELDS. PAINT ALL POSTS AND RAILS WITH RUST INHIBITING PAINT AS SPECIFIED. COLOR TO BE AS SPECIFIED, NOTED, OR SELECTED BY OWNER.
2. AT CORNERS, PROVIDE SECOND "END CONDITION" PANEL AT RIGHT ANGLE TO FIRST.

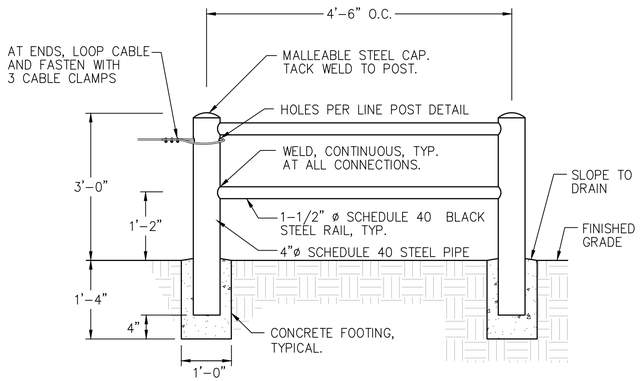

END & CORNER PANEL – ELEVATION
NTS

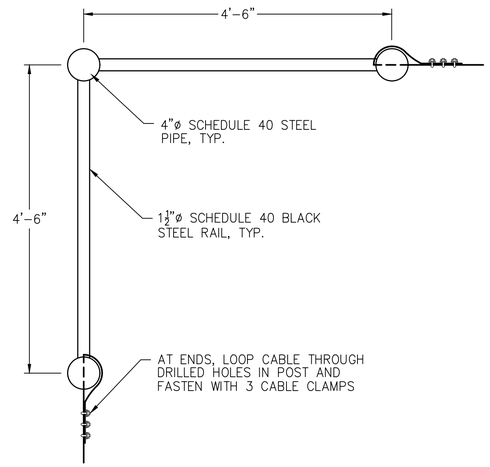

END & CORNER POST – PLAN VIEW
NTS

NOTES:

1. CABLE TO BE TERMINATED AT END/CORNER PANELS ONLY. SPLICING OF CABLE BETWEEN END/CORNER PANELS IS PROHIBITED.
2. DISTANCE BETWEEN POSTS SHALL BE 12'-0".
3. PLACE CABLE CLAMPS ON BOTH SIDES OF POST (8" FROM CENTER) EVERY FOURTH POST TO PREVENT REMOVAL OF CABLE. CUT CABLE EVERY 250', OVERLAP AND SPLICE WITH THREE CABLE CLAMPS.

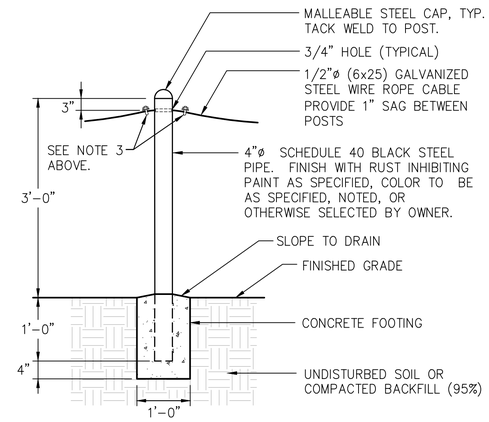

LINE POST – ELEVATION
NTS

(A) POST AND CABLE BARRIER DETAILS

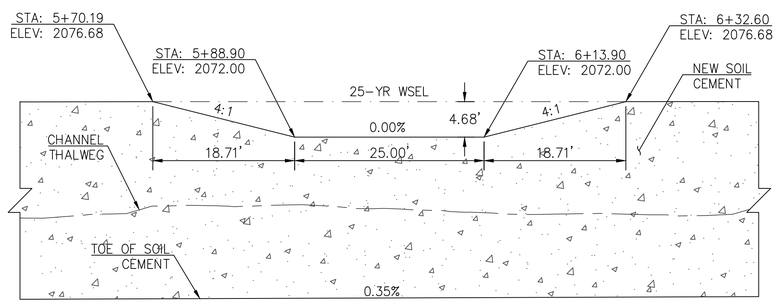

(B) SOIL CEMENT NOTCH DETAIL

NTS

Contact Arizona 811 at least two full working days before you begin excavation
ARIZONA811
Call 811 or click Arizona811.com

SCALES:	HORIZ. N/A
	VERT. N/A

SHEET CD2 OF CD4

PAGE 8 OF 22

PIMA COUNTY REGIONAL FLOOD CONTROL DISTRICT

CIVIL DETAILS FOR EL RIO PRESERVE BANK PROTECTION

PSOMAS
333 E. Wetmore Road, Suite 450
Tucson, Arizona 85705
(520) 292-2300 (520) 292-1290 (FAX)

NO.	REVISION DESCRIPTION	DIV. ENGINEER	DATE

Registered Professional Engineer (Civil) 46896 KEVIN LL LETENDRE Date Signed 1/21/20 Arizona U.S.A. Expires 6/30/20

		DATE
DESIGNED:	CR	1/2020
DRAWN:	CR/KL/EA	1/2020
CHECKED:	KL	1/2020
PROJ. ENG.:	CR	1/2020

SUZANNE SHIELDS, P.E., DIRECTOR

PIMA COUNTY W.O. 5LKMNA

T:\PFC80101\ENGR\SHEETS\PHASE I PLANS\Civil Details\CD1.dwg CD2 Last Saved: Tue, 21 Jan 2020 By: Chelsi.remme Plotted: Tuesday, January 21, 2020 12:39:05 PM

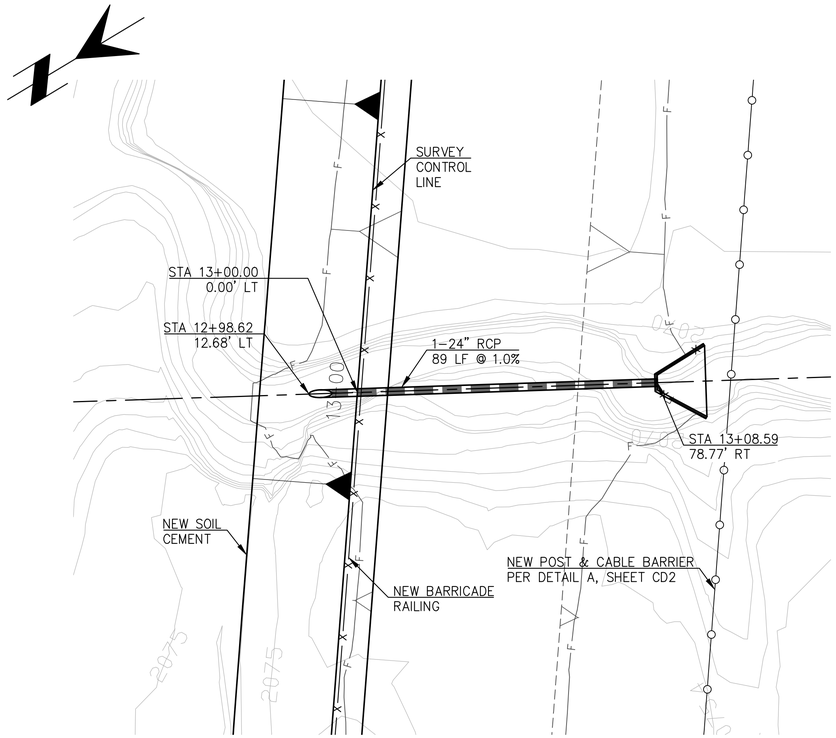

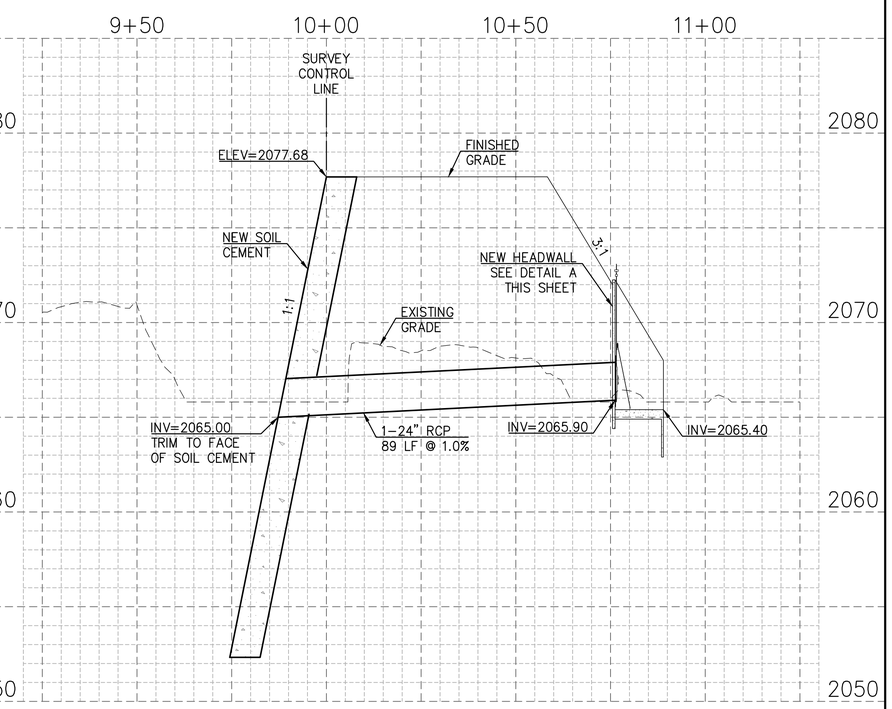

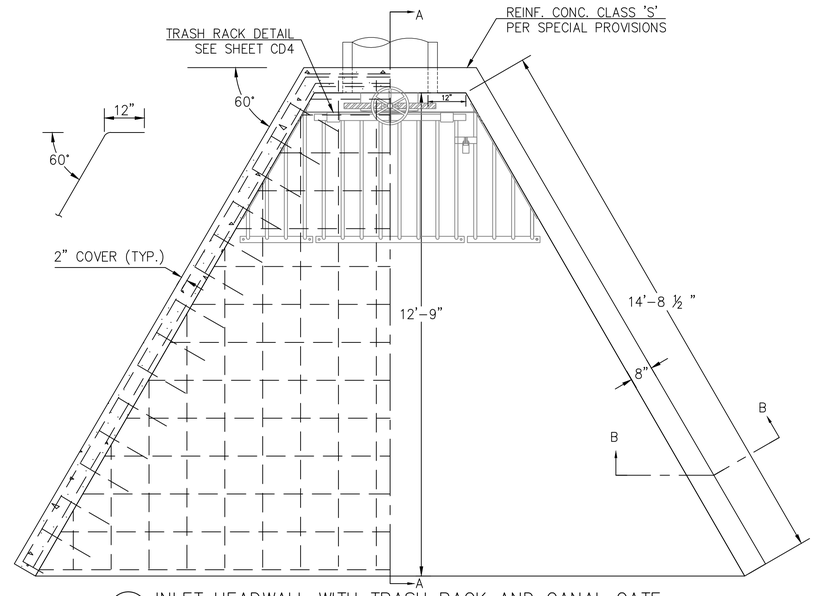

A INLET HEADWALL WITH TRASH RACK AND CANAL GATE

NTS

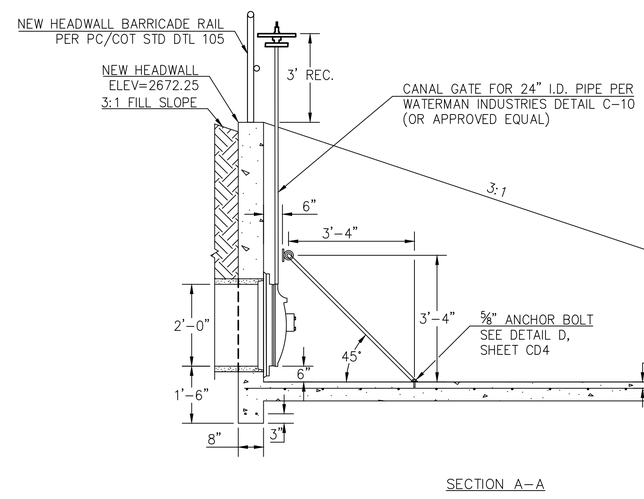

SECTION A–A

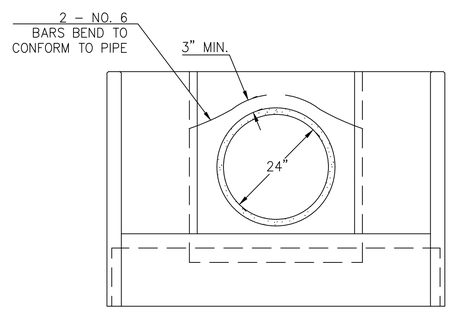

ELEVATION

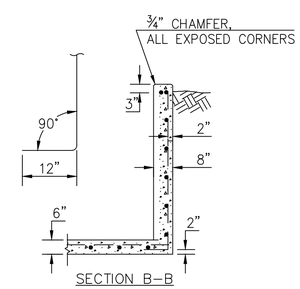

SECTION B–B

GENERAL NOTES

1. CONTRACTOR TO VERIFY ALL DIMENSIONS PRIOR TO FABRICATION.
2. CONTRACTOR SHALL SUBMIT SHOP DRAWINGS FOR ANY MODIFICATIONS AND PROVIDE AS-BUILT DRAWINGS AFTER COMPLETION.
3. GALVANIZE ALL FERROUS PARTS AFTER FABRICATION.
4. ALL STEEL SHALL BE IN ACCORDANCE WITH ASTM A36.
5. ALL BOLTS AND NUTS SHALL BE HIGH STRENGTH GALVANIZED AND CONFIRM TO PAG SECTION 604-2.03.
6. BARRIER PIPES SHALL BE EQUALLY SPACED.
7. UPSET OR DAMAGE EXPOSED THREADS ON ANCHOR BOLTS AFTER INSTALLATION.
8. ALL WELDING SHALL BE IN ACCORDANCE WITH ADOT STD. SPEC 604-3.06.
9. ALL CONCRETE SHALL BE CLASS 'S' PER SPECIAL PROVISIONS.
10. ALL REINFORCING BARS SHALL BE NO. 4 EXCEPT NO. 6 BARS OVER PIPE. BAR SPACING APPROXIMATELY 12" C TO C UNLESS OTHERWISE NOTED.
11. FOR WALLS REQUIRING SAFETY RAIL, MIN. WALL THICKNESS IS 8".

HZ. SCALE IN FEET
20 0 20 40
4 0 4 8
VT. SCALE IN FEET

Contact Arizona 811 at least two full working days before you begin excavation
ARIZONA811
Call 811 or click Arizona811.com

SCALES:	HORIZ. 1"=20'
	VERT. 1"=4'

SHEET CD3 OF CD4

SUZANNE SHIELDS, P.E., DIRECTOR

		DATE
DESIGNED:	CR	1/2020
DRAWN:	CR/KL/EA	1/2020
CHECKED:	KL	1/2020
PROJ. ENG.:	CR	1/2020

NO.	REVISION DESCRIPTION	DIV. ENGINEER	DATE

Registered Professional Engineer (Civil) 46896 KEUN LI LETENDRE Date Signed 1/21/20 Arizona U.S.A. Expires 6/30/20

PSOMAS
333 E. Wetmore Road, Suite 450
Tucson, Arizona 85705
(520) 292-2300 (520) 292-1290 (FAX)

PIMA COUNTY REGIONAL FLOOD CONTROL DISTRICT

CIVIL DETAILS FOR EL RIO PRESERVE BANK PROTECTION

PIMA COUNTY W.O. 5LKMNA

PAGE 9 OF 22

T:\PFC80101\ENGR\SHEETS\PHASE I PLANS\Civil Details\CD1.dwg CD3 Last Saved: Tue, 21 Jan 2020 By: Chelsi.remme Plotted: Tuesday, January 21, 2020 12:39:17 PM

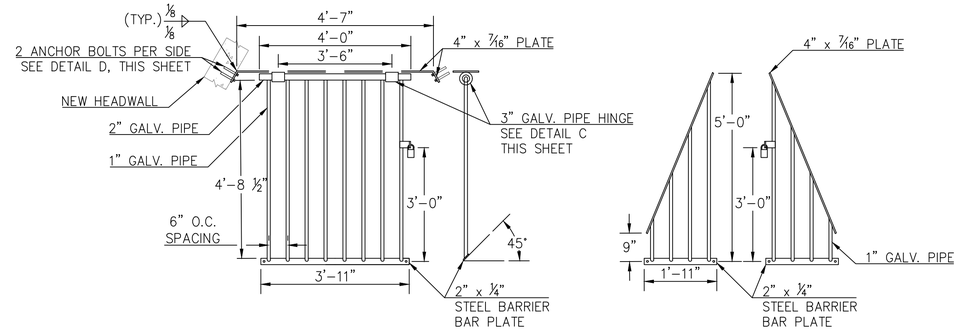

A TRASH RACK GATE DETAIL
MODIFIED MAG STD. DTL. 502-2 NTS

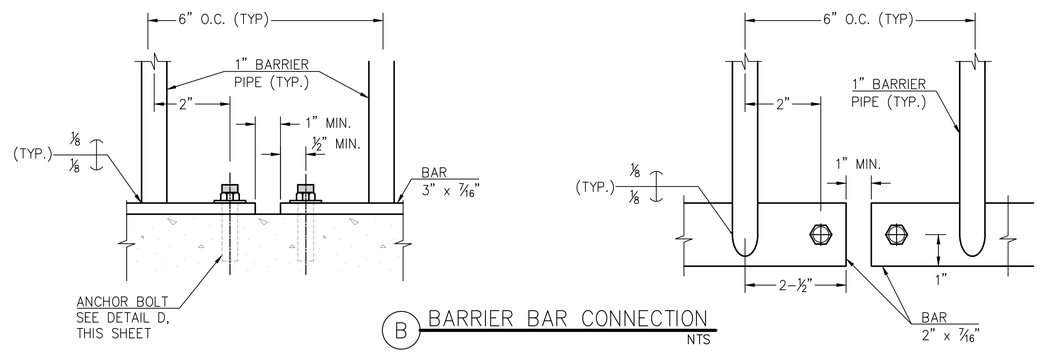

B BARRIER BAR CONNECTION
NTS

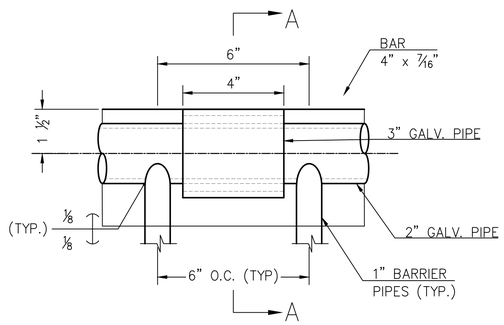

C BARRIER HINGE
NTS

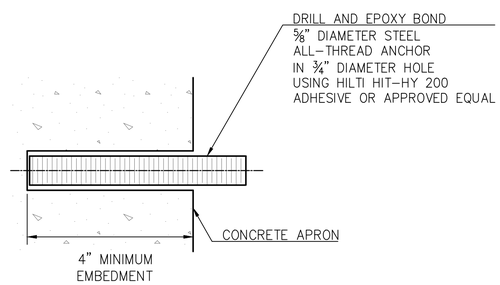

D ANCHOR BOLT
NTS

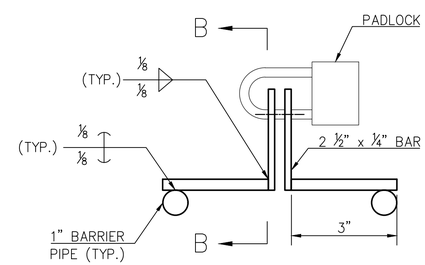

E LOCK BARS
NTS

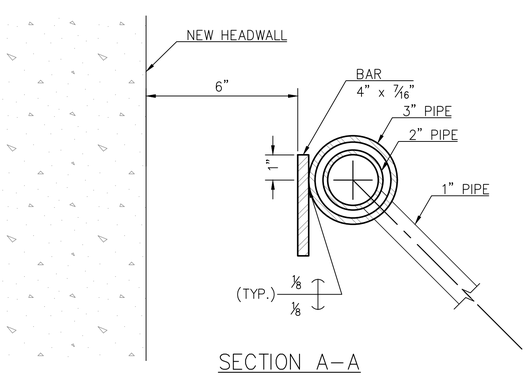

SECTION A-A

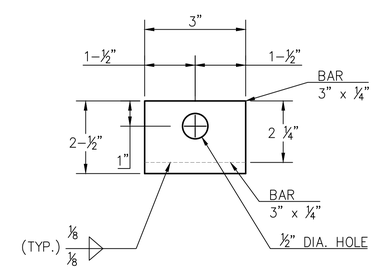

SECTION B-B

GENERAL NOTES

1. CONTRACTOR TO VERIFY ALL DIMENSIONS PRIOR TO FABRICATION.
2. CONTRACTOR SHALL SUBMIT SHOP DRAWINGS FOR ANY MODIFICATIONS AND PROVIDE AS-BUILT DRAWINGS AFTER COMPLETION.
3. GALVANIZE ALL FERROUS PARTS AFTER FABRICATION.
4. ALL STEEL SHALL BE IN ACCORDANCE WITH ASTM A36.
5. ALL BOLTS AND NUTS SHALL BE HIGH STRENGTH GALVANIZED AND CONFIRM TO PAG SECTION 604-2.03.
6. BARRIER PIPES SHALL BE EQUALLY SPACED.
7. UPSET OR DAMAGE EXPOSED THREADS ON ANCHOR BOLTS AFTER INSTALLATION.
8. ALL WELDING SHALL BE IN ACCORDANCE WITH ADOT STD. SPEC 604-3.06.
9. ALL PADLOCKS SHALL BE PROVIDED BY THE PIMA COUNTY REGIONAL FLOOD CONTROL DISTRICT.

HZ. SCALE IN FEET
20 0 20 40
4 0 4 8
VT. SCALE IN FEET

Contact Arizona 811 at least two full working days before you begin excavation
ARIZONA811
Call 811 or click Arizona811.com

SCALES: HORIZ. 1"=20' VERT. 1"=4'

SHEET CD4 OF CD4

PIMA COUNTY REGIONAL FLOOD CONTROL DISTRICT

CIVIL DETAILS
FOR
EL RIO PRESERVE
BANK PROTECTION

PSOMAS
333 E. Wetmore Road, Suite 450
Tucson, Arizona 85705
(520) 292-2300 (520) 292-1290 (FAX)

Registered Professional Engineer (Civil)
CERTIFICATE NO. 46896
KEVIN LL LETENDRE
Date Signed 1/21/20
ARIZONA U.S.A.
Expires 6/30/20

NO.	REVISION DESCRIPTION	DIV. ENGINEER	DATE

		DATE
DESIGNED:	CR	1/2020
DRAWN:	CR/KL/EA	1/2020
CHECKED:	KL	1/2020
PROJ. ENG.:	CR	1/2020

SUZANNE SHIELDS, P.E., DIRECTOR

PIMA COUNTY W.O. 5LKMNA

T:\PFC80101\ENGR\SHEETS\PHASE I PLANS\Civil Details\CD1.dwg CD4 Last Saved: Tue, 21 Jan 2020 By: Chelsi.remme Plotted: Tuesday, January 21, 2020 1:00:40 PM

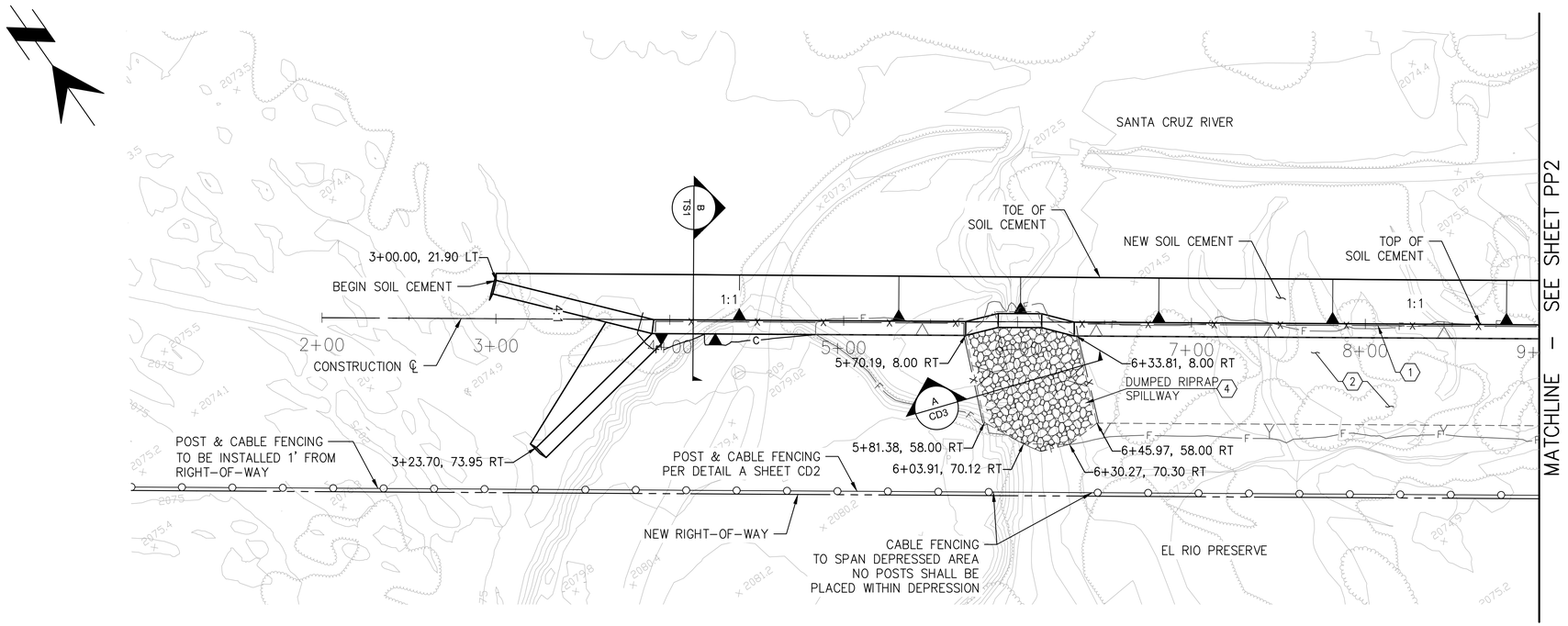

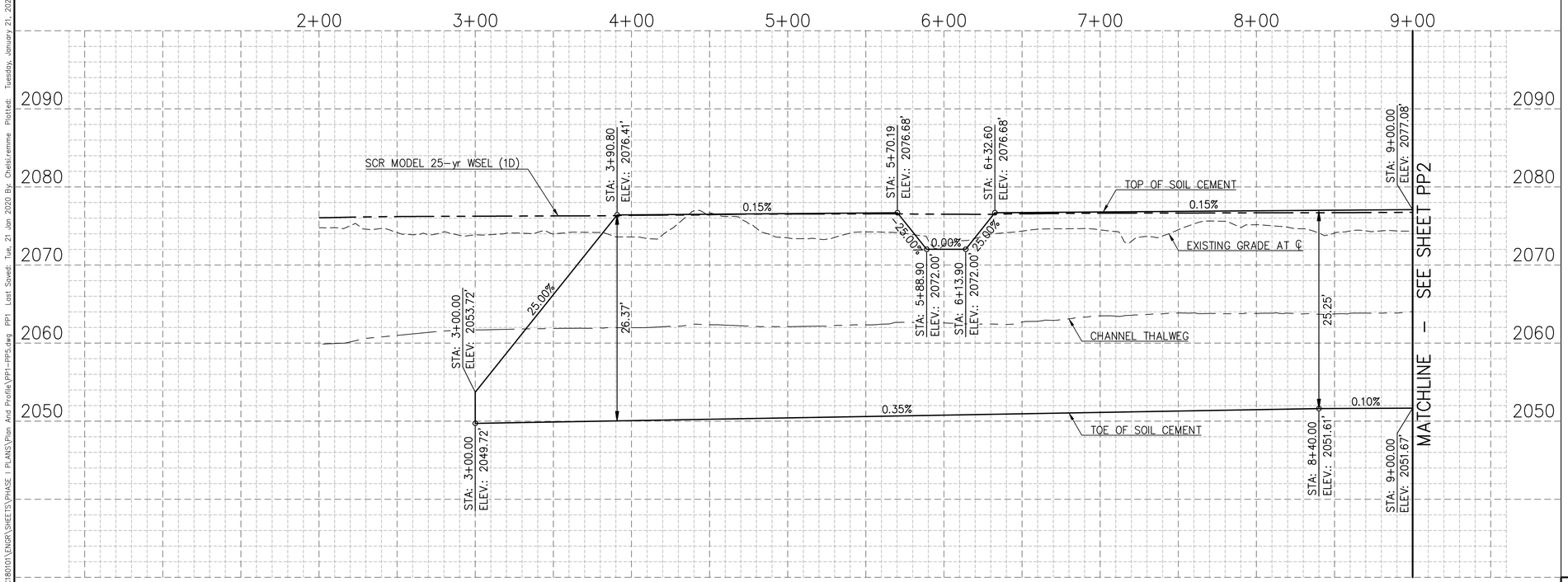

KEYNOTES:

1. NEW BARRICADE RAILING PER PC/COT STD. DTL. 105. SEE DETAL SHEET CD1.
2. FILL MATERIAL TO BE PLACED PRIOR TO SOIL CEMENT CONSTRUCTION AS PART OF CHANNEL MAINTENANCE PROJECT. 3:1 SLOPE TO BE CUT BACK TO ACCOMMODATE SOIL CEMENT.
4. 285 CY DUMPED RIPRAP PER DETAIL A, SHEET CD3

HZ. SCALE IN FEET: 40 0 40 80

VT. SCALE IN FEET: 8 0 8 16

Contact Arizona 811 at least two full working days before you begin excavation
ARIZONA811
Call 811 or click Arizona811.com

SCALES: HORIZ. 1"=40' VERT. 1"=8'

SHEET PP1 OF PP5

SUZANNE SHIELDS, P.E., DIRECTOR

DESIGNED:	CR	1/2020
DRAWN:	CR/KL/EA	1/2020
CHECKED:	KL	1/2020
PROJ. ENG.:	CR	1/2020

NO.	REVISION DESCRIPTION	DIV. ENGINEER	DATE

Registered Professional Engineer (Civil) CERTIFICATE NO. 46896 KEVIN U. LETENDRE Date Signed 1/21/20 Arizona, U.S.A.

PSOMAS
333 E. Wetmore Road, Suite 450
Tucson, Arizona 85705
(520) 292-2300 (520) 292-1290 (FAX)

PIMA COUNTY REGIONAL FLOOD CONTROL DISTRICT

PLAN AND PROFILE FOR EL RIO PRESERVE BANK PROTECTION

STA 3+00 TO STA 9+00

PIMA COUNTY W.O. 5LKMNA

PAGE 11 OF 22

T:\7FC180101\ENGR\SHEETS\PHASE I PLANS\Plan And Profile\PP1-PP5.dwg PP1 Last Saved: Tue, 21 Jan 2020 By: Chelsi remme Plotted: Tuesday, January 21, 2020 12:40:04 PM

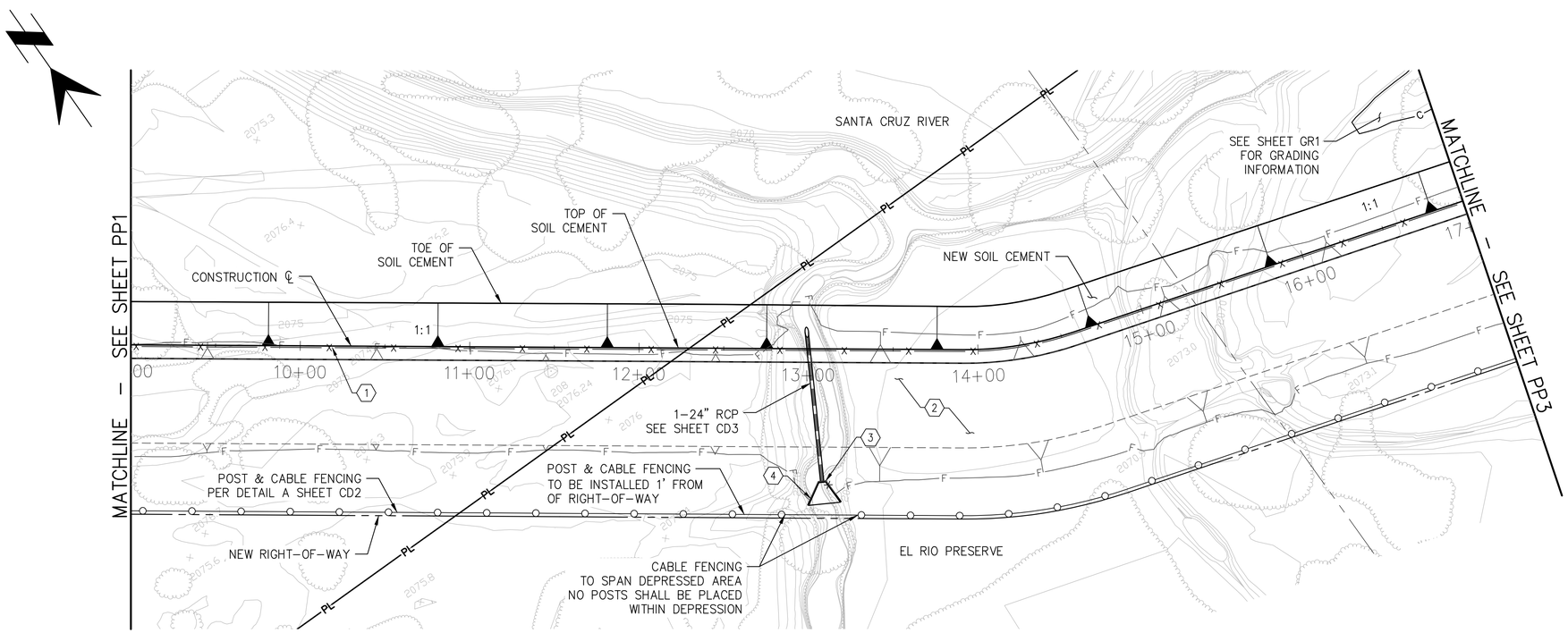

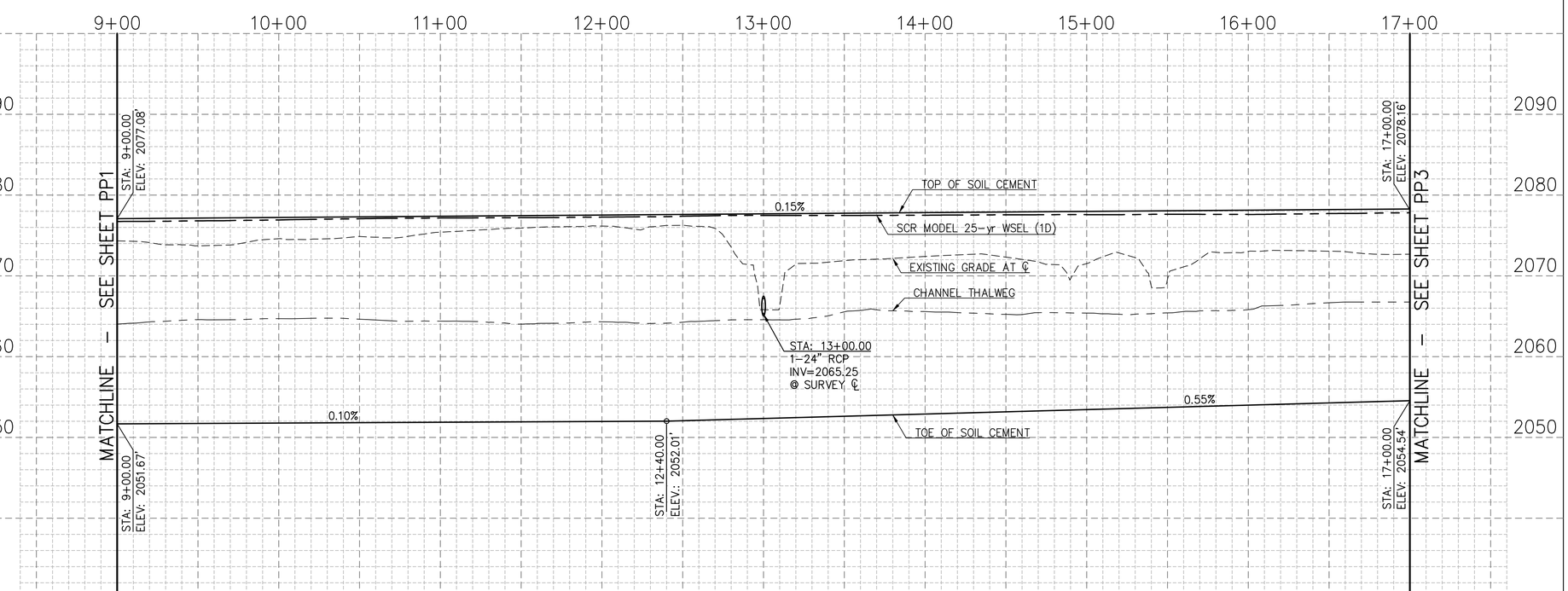

KEYNOTES:

1. NEW BARRICADE RAILING PER MODIFIED PC/COT STD. DTL. 105. SEE DETAL SHEET CD1.
2. FILL MATERIAL TO BE PLACED PRIOR TO SOIL CEMENT CONSTRUCTION AS PART OF CHANNEL MAINTENANCE PROJECT. 3:1 SLOPE TO BE CUT BACK TO ACCOMMODATE SOIL CEMENT.
3. NEW HEADWALL PER DETAIL A, SHEET CD3 (TO BE PAID UNDER ITEM 6016090). ATTACH 24" WATERMAN C–10 CANAL GATE (OR APPROVED EQUAL) TO HEADWALL PER MANUFACTURERS RECOMMENDATIONS (TO BE PAID UNDER ITEM 6016090).
4. NEW BARRICADE RAILING PER PC/COT STD. DTL. 105.

HZ. SCALE IN FEET
40 0 40 80
8 0 8 16
VT. SCALE IN FEET

Contact Arizona 811 at least two full working days before you begin excavation
ARIZONA811
Call 811 or click Arizona811.com

SCALES: HORIZ. 1"=40' VERT. 1"=8'

SHEET PP2 OF PP5

PAGE 12 OF 22

SUZANNE SHIELDS, P.E., DIRECTOR

DESIGNED:	CR	1/2020
DRAWN:	CR/KL/EA	1/2020
CHECKED:	KL	1/2020
PROJ. ENG.:	CR	1/2020

NO.	REVISION DESCRIPTION	DIV. ENGINEER	DATE

Registered Professional Engineer (Civil) CERTIFICATE NO. 46896 KEVIN U. LETENDRE Date Signed 1/21/20 Expires 12/31/20 ARIZONA U.S.A.

PSOMAS
333 E. Wetmore Road, Suite 450
Tucson, Arizona 85705
(520) 292-2300 (520) 292-1290 (FAX)

PIMA COUNTY REGIONAL FLOOD CONTROL DISTRICT

PLAN AND PROFILE FOR EL RIO PRESERVE BANK PROTECTION
STA 9+00 TO STA 17+00

PIMA COUNTY W.O. 5LKMNA

T:\PFC180101\ENGR\SHEETS\PHASE I PLANS\Plan And Profile\PP1-PP5.dwg PP2 Last Saved: Tue, 21 Jan 2020 By: Chelsi remme Plotted: Tuesday, January 21, 2020 12:40:18 PM

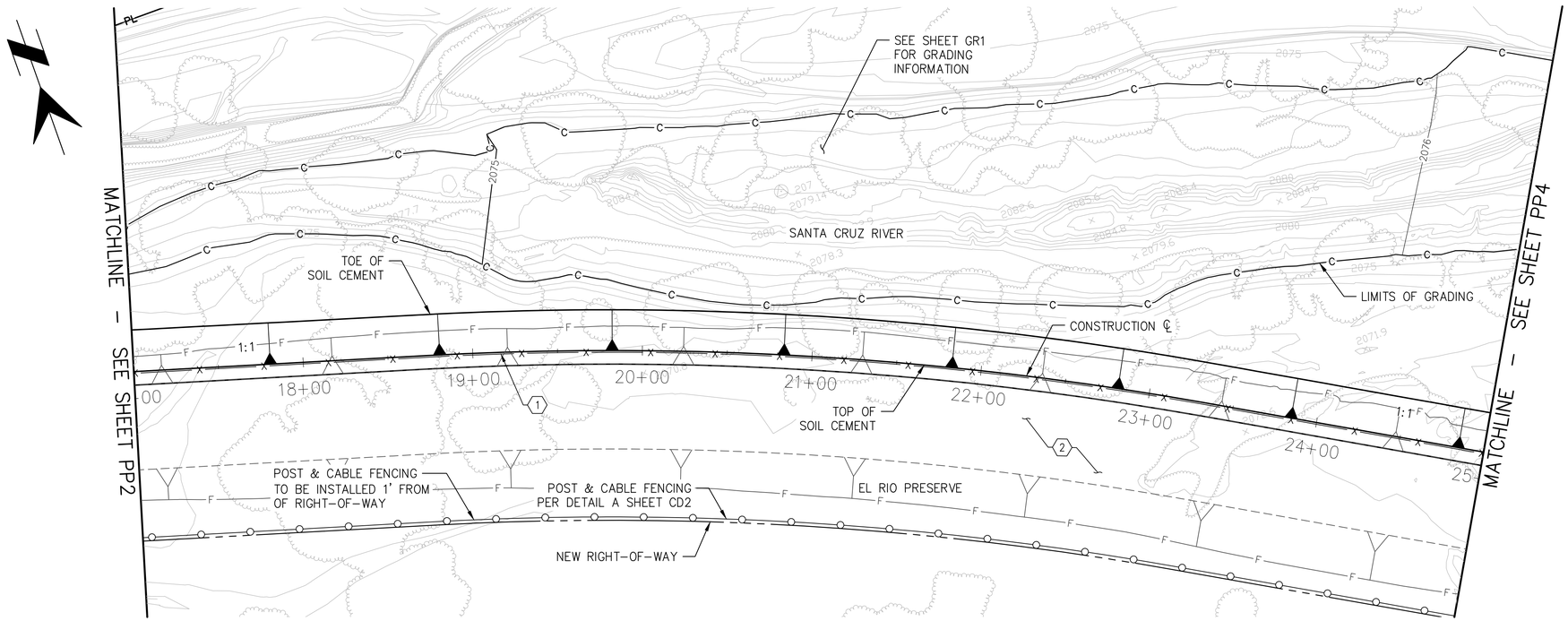

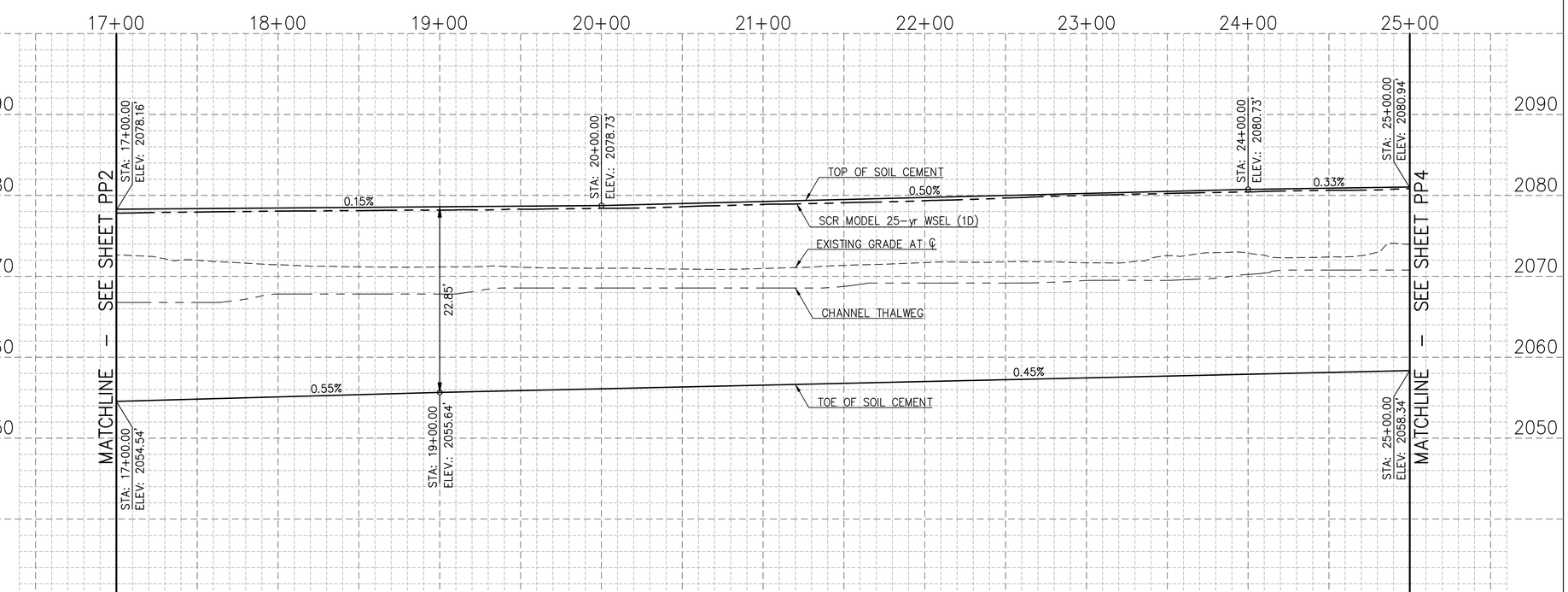

KEYNOTES:

1. NEW BARRICADE RAILING PER PC/COT STD. DTL. 105. SEE DETAL SHEET CD1.
2. FILL MATERIAL TO BE PLACED PRIOR TO SOIL CEMENT CONSTRUCTION AS PART OF CHANNEL MAINTENANCE PROJECT. 3:1 SLOPE TO BE CUT BACK TO ACCOMMODATE SOIL CEMENT

HZ. SCALE IN FEET: 40 0 40 80

VT. SCALE IN FEET: 8 0 8 16

Contact Arizona 811 at least two full working days before you begin excavation
ARIZONA811
Call 811 or click Arizona811.com

SCALES: HORIZ. 1"=40' VERT. 1"=8'

SHEET PP3 OF PP5

SUZANNE SHIELDS, P.E., DIRECTOR

NO.	REVISION DESCRIPTION	DIV. ENGINEER	DATE

		DATE
DESIGNED:	CR	1/2020
DRAWN:	CR/KL/EA	1/2020
CHECKED:	KL	1/2020
PROJ. ENG.:	CR	1/2020

Registered Professional Engineer (Civil) CERTIFICATE NO. 46896 KEVIN U. LETENDRE Date Signed 1/21/20 Expires 12/31/20 ARIZONA U.S.A.

PSOMAS
333 E. Wetmore Road, Suite 450
Tucson, Arizona 85705
(520) 292-2300 (520) 292-1290 (FAX)

PIMA COUNTY REGIONAL FLOOD CONTROL DISTRICT

PLAN AND PROFILE FOR EL RIO PRESERVE BANK PROTECTION

STA 17+00 TO STA 25+00

PIMA COUNTY W.O. 5LKMNA

PAGE 13 OF 22

T:\PFC180101\ENGR\SHEETS\PHASE I PLANS\Plan And Profile\PP1-PP5.dwg PP3 Last Saved: Tue, 21 Jan 2020 By: Chelsi remme Plotted: Tuesday, January 21, 2020 12:40:31 PM

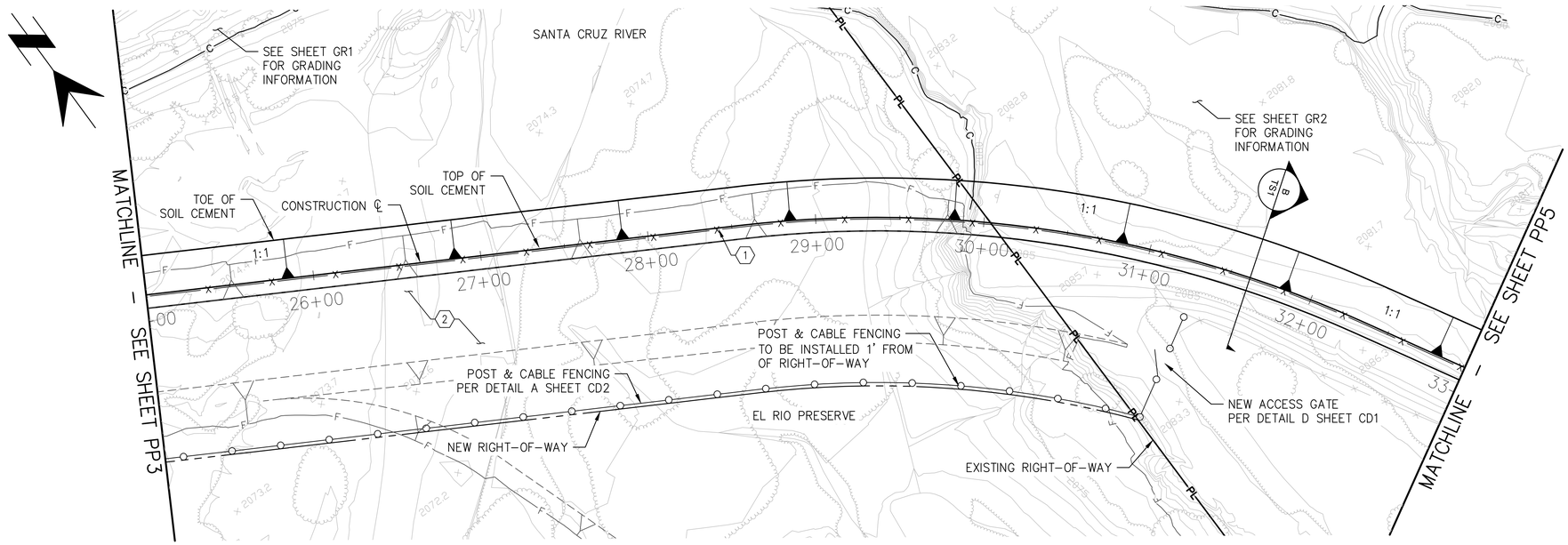

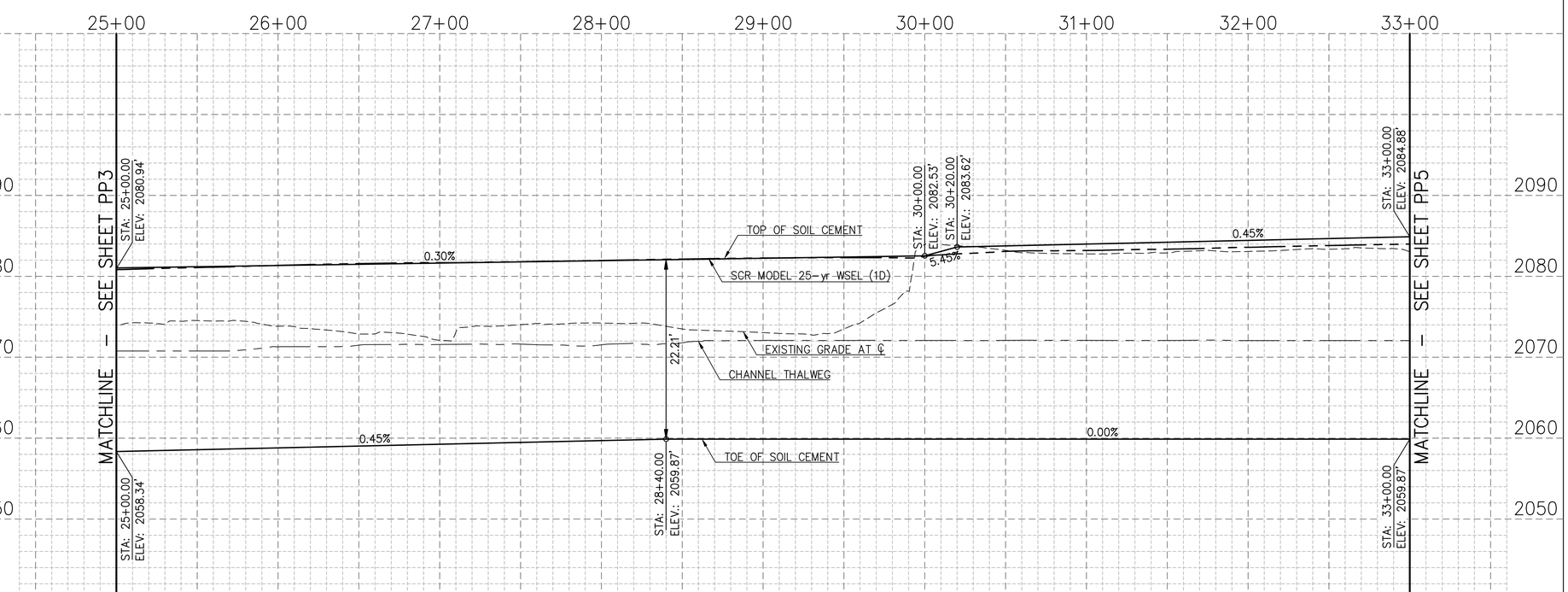

KEYNOTES:

1. NEW BARRICADE RAILING PER PC/COT STD. DTL. 105. SEE DETAL SHEET CD1.
2. FILL MATERIAL TO BE PLACED PRIOR TO SOIL CEMENT CONSTRUCTION AS PART OF CHANNEL MAINTENANCE PROJECT. 3:1 SLOPE TO BE CUT BACK TO ACCOMMODATE SOIL CEMENT

HZ. SCALE IN FEET: 40 0 40 80
VT. SCALE IN FEET: 8 0 8 16

Contact Arizona 811 at least two full working days before you begin excavation
ARIZONA811
Call 811 or click Arizona811.com

SCALES: HORIZ. 1"=40' VERT. 1"=8'

SHEET PP4 OF PP5

SUZANNE SHIELDS, P.E., DIRECTOR

DESIGNED:	CR	1/2020
DRAWN:	CR/KL/EA	1/2020
CHECKED:	KL	1/2020
PROJ. ENG.:	CR	1/2020

NO.	REVISION DESCRIPTION	DIV. ENGINEER	DATE

Registered Professional Engineer (Civil) CERTIFICATE NO. 46896 KEVIN U. LETENDRE Date Signed 1/21/20 Expires 12/31/20 ARIZONA U.S.A.

PSOMAS
333 E. Wetmore Road, Suite 450
Tucson, Arizona 85705
(520) 292-2300 (520) 292-1290 (FAX)

PIMA COUNTY REGIONAL FLOOD CONTROL DISTRICT

PLAN AND PROFILE FOR EL RIO PRESERVE BANK PROTECTION
STA 25+00 TO STA 33+00

PIMA COUNTY W.O. 5LKMNA

PAGE 14 OF 22

T:\PFC180101\ENGR\SHEETS\PHASE I PLANS\Plan And Profile\PP1-PP5.dwg PP4 Last Saved: Tue, 21 Jan 2020 By: Chelsi remme Plotted: Tuesday, January 21, 2020 12:40:48 PM

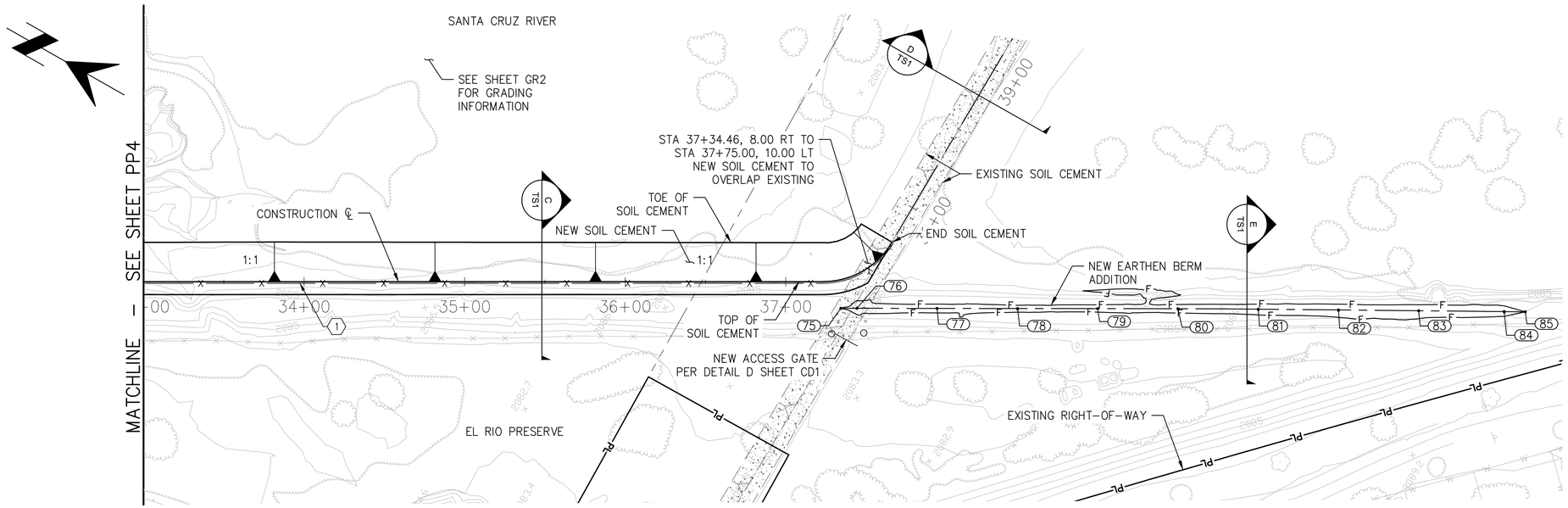

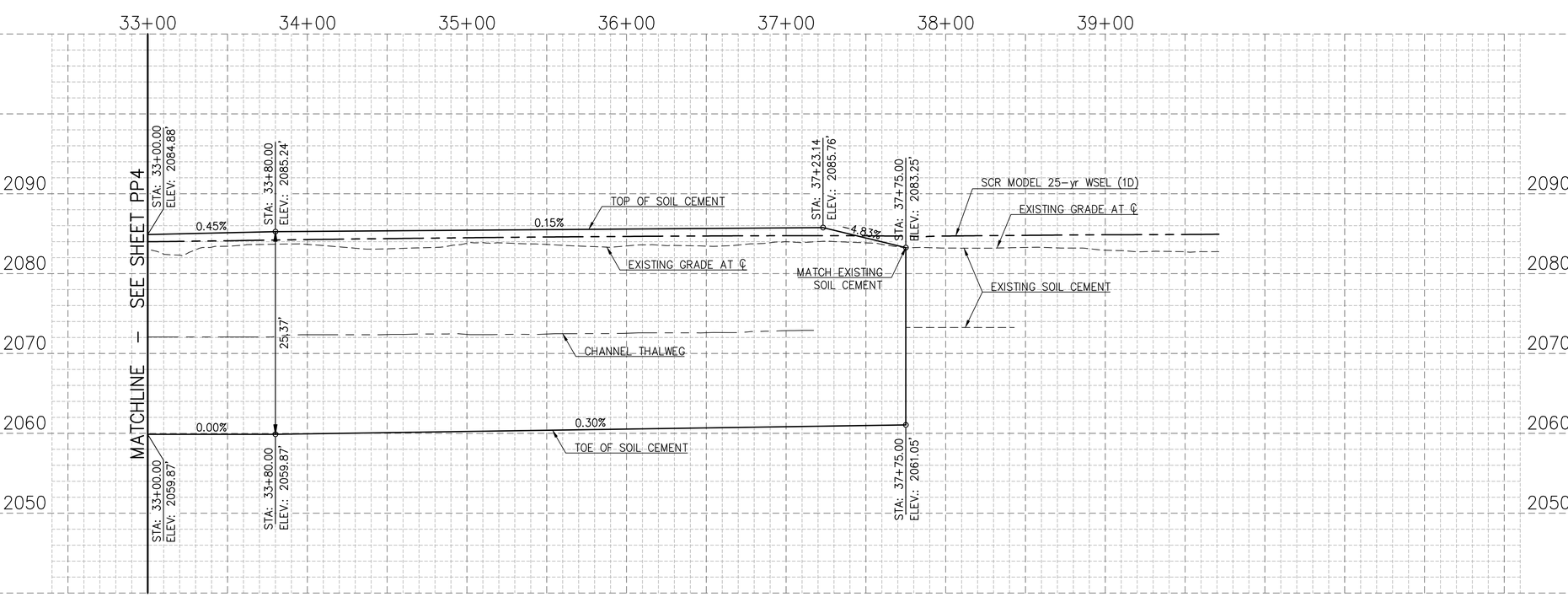

KEYNOTES:

1. NEW BARRICADE RAILING PER PC/COT STD. DTL. 105. SEE DETAL SHEET CD1.

Point Table			
Point #	Northing	Easting	Elevation
75	507116.59	942699.62	2086.69
76	507107.93	942704.50	2087.63
77	507064.47	942729.12	2087.59
78	507020.88	942753.81	2087.55
79	506977.46	942778.41	2087.52
80	506933.90	942803.08	2087.48
81	506890.31	942827.55	2087.52
82	506846.57	942851.83	2087.65
83	506802.93	942876.06	2087.79
84	506756.34	942901.93	2087.93
85	506744.87	942908.30	2087.00

HZ. SCALE IN FEET
40 0 40 80
8 0 8 16
VT. SCALE IN FEET

Contact Arizona 811 at least two full working days before you begin excavation
ARIZONA811
Call 811 or click Arizona811.com

SCALES: HORIZ. 1"=40' VERT. 1"=8'

SHEET PP5 OF PP5

PAGE 15 OF 22

SUZANNE SHIELDS, P.E., DIRECTOR

		DATE
DESIGNED:	CR	1/2020
DRAWN:	CR/KL/EA	1/2020
CHECKED:	KL	1/2020
PROJ. ENG.:	CR	1/2020

NO.	REVISION DESCRIPTION	DIV. ENGINEER	DATE

Registered Professional Engineer (Civil) CERTIFICATE NO. 46896 KEVIN U. LETENDRE Date Signed 1/21/20 Expires 12/31/20 ARIZONA U.S.A.

PSOMAS
333 E. Wetmore Road, Suite 450
Tucson, Arizona 85705
(520) 292-2300 (520) 292-1290 (FAX)

PIMA COUNTY REGIONAL FLOOD CONTROL DISTRICT

PLAN AND PROFILE
FOR
EL RIO PRESERVE
BANK PROTECTION
STA 33+00 TO STA 39+00

PIMA COUNTY W.O. 5LKMNA

T:\PFC180101\ENGR\SHEETS\PHASE I PLANS\Plan And Profile\PP1-PP5.dwg PP5 Last Saved: Tue, 21 Jan 2020 By: Chelsi remme Plotted: Tuesday, January 21, 2020 12:41:05 PM

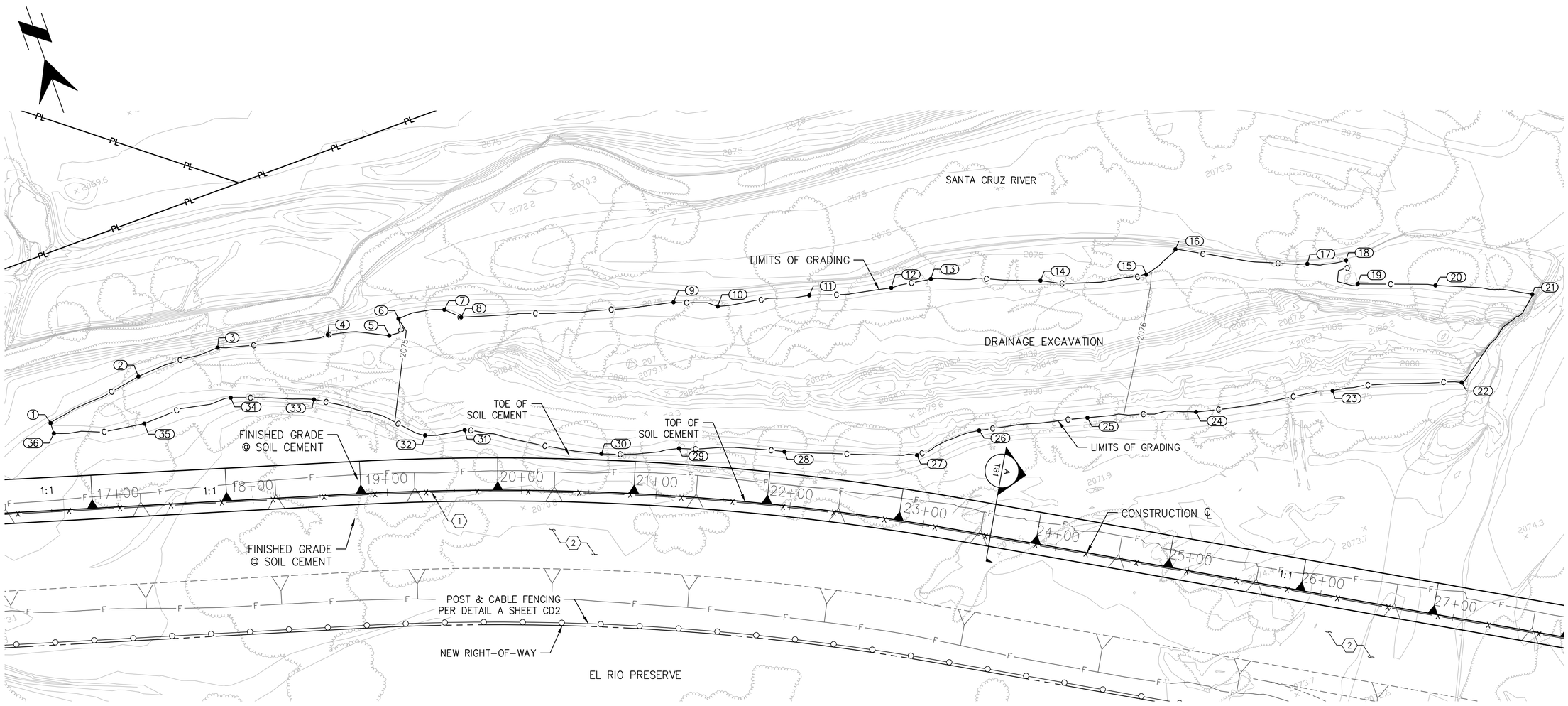

Point Table		
Point #	Northing	Easting
1	508386.31	941132.81
2	508397.04	941205.97
3	508397.48	941268.64
4	508379.20	941349.06
5	508363.22	941391.97
6	508372.79	941402.61
7	508367.67	941437.03
8	508358.25	941446.89
9	508315.87	941599.53
10	508301.98	941629.38
11	508286.94	941696.40
12	508271.80	941755.63

Point Table		
Point #	Northing	Easting
13	508268.21	941785.65
14	508239.71	941862.12
15	508217.64	941937.82
16	508228.10	941964.42
17	508185.06	942053.27
18	508177.99	942081.28
19	508158.52	942083.63
20	508138.09	942137.75
21	508107.81	942203.33
22	508063.60	942131.94
23	508089.92	942039.45
24	508109.08	941938.47

Point Table		
Point #	Northing	Easting
25	508132.04	941860.90
26	508150.09	941781.82
27	508148.15	941732.13
28	508183.71	941640.09
29	508212.14	941567.04
30	508227.67	941511.34
31	508278.39	941421.34
32	508284.50	941392.35
33	508337.27	941323.26
34	508359.20	941265.36
35	508362.55	941198.40
36	508378.22	941132.57

KEYNOTES:

1. NEW BARRICADE RAILING PER PC/COT STD. DTL. 105
2. FILL MATERIAL TO BE PLACED PRIOR TO SOIL CEMENT CONSTRUCTION AS PART OF SANTA CRUZ RIVER MAINTENANCE PROJECT. 3:1 SLOPE TO BE CUT BACK TO ACCOMMODATE SOIL CEMENT.

NOTE:
ALL DISTURBED AREAS AND SLOPES SHALL BE HYDROSEEDED.

SCALE IN FEET
40 0 40 80

Contact Arizona 811 at least two full working days before you begin excavation
ARIZONA811
Call 811 or click Arizona811.com

SCALES: HORIZ. 1"=40' VERT. N/A

SHEET GR1 OF GR2

PAGE 16 OF 22

SUZANNE SHIELDS, P.E., DIRECTOR

DESIGNED:	CR	DATE 1/2020
DRAWN:	CR/KL/EA	1/2020
CHECKED:	KL	1/2020
PROJ. ENG.:	CR	1/2020

NO.	REVISION DESCRIPTION	DIV. ENGINEER	DATE

Registered Professional Engineer (Civil) CERTIFICATE NO. 46896 KEVIN U. LETENDRE Date Signed 1/21/20 ARIZONA U.S.A. Expires 12/31/20

PSOMAS
333 E. Wetmore Road, Suite 450
Tucson, Arizona 85705
(520) 292-2300 (520) 292-1290 (FAX)

PIMA COUNTY REGIONAL FLOOD CONTROL DISTRICT

GRADING PLAN
FOR
EL RIO PRESERVE
BANK PROTECTION
CHANNEL GRADING

PIMA COUNTY W.O. 5LKMNA

T:\PFC180101\ENGR\SHEETS\PHASE I PLANS\Grading\GR1.dwg GR1 Last Saved: Tue, 21 Jan 2020 By: Chelsi remme Plotted: Tuesday, January 21, 2020 12:41:36 PM

Point Table		
Point #	Northing	Easting
37	507969.94	942305.54
38	507933.52	942359.79
39	507913.19	942379.49
40	507891.82	942388.87
41	507851.74	942427.01
42	507799.01	942473.22
43	507757.20	942511.72
44	507712.55	942555.70
45	507705.97	942594.06
46	507689.58	942603.90
47	507623.69	942671.81
48	507537.25	942783.69

Point Table		
Point #	Northing	Easting
49	507477.77	942837.22
50	507416.18	942912.80
51	507367.55	942981.11
52	507350.09	942995.46
53	507347.66	943014.25
54	507340.31	943029.79
55	507344.66	943044.20
56	507330.46	943082.54
57	507340.25	943106.77
58	507323.40	943123.76
59	507286.92	943161.46
60	507252.29	943201.70

Point Table		
Point #	Northing	Easting
61	507219.91	943190.95
62	507163.83	943144.09
63	507101.31	943096.57
64	507106.23	942921.29
65	507109.26	942751.05
66	507768.74	942333.89
67	507792.04	942344.29
68	507820.87	942336.82
69	507859.01	942342.19
70	507885.63	942333.78
71	507907.26	942310.41
72	507920.74	942321.25

Point Table		
Point #	Northing	Easting
73	507910.10	942346.81
74	507916.90	942355.16

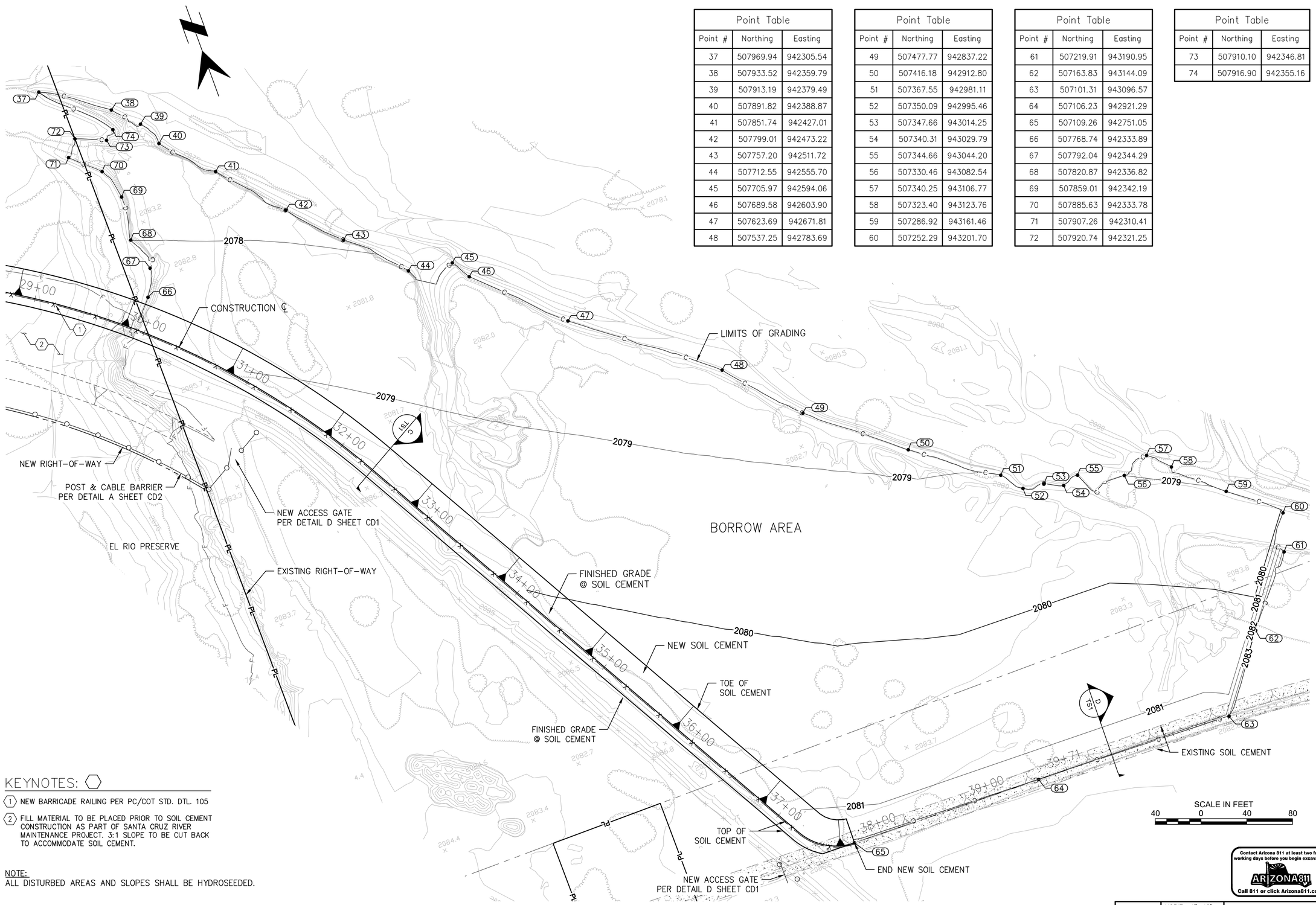

KEYNOTES:

1. NEW BARRICADE RAILING PER PC/COT STD. DTL. 105
2. FILL MATERIAL TO BE PLACED PRIOR TO SOIL CEMENT CONSTRUCTION AS PART OF SANTA CRUZ RIVER MAINTENANCE PROJECT. 3:1 SLOPE TO BE CUT BACK TO ACCOMMODATE SOIL CEMENT.

NOTE:
ALL DISTURBED AREAS AND SLOPES SHALL BE HYDROSEEDED.

Contact Arizona 811 at least two full working days before you begin excavation
ARIZONA811
Call 811 or click Arizona811.com

SCALES: HORIZ. 1"=40' VERT. N/A

SHEET GR2 OF GR2

PAGE 17 OF 22

SUZANNE SHIELDS, P.E., DIRECTOR

NO.	REVISION DESCRIPTION	DIV. ENGINEER	DATE

		DATE
DESIGNED:	CR	1/2020
DRAWN:	CR/KL/EA	1/2020
CHECKED:	KL	1/2020
PROJ. ENG.:	CR	1/2020

Registered Professional Engineer (Civil) 46896 KEVIN U. LETENDRE Date Signed 1/21/20 ARIZONA, U.S.A.

PSOMAS
333 E. Wetmore Road, Suite 450
Tucson, Arizona 85705
(520) 292-2300 (520) 292-1280 (FAX)

PIMA COUNTY REGIONAL FLOOD CONTROL DISTRICT

GRADING PLAN
FOR
EL RIO PRESERVE
BANK PROTECTION
CHANNEL GRADING

PIMA COUNTY W.O. 5LKMNA

I:\7PFC180101\ENGR\SHEETS\PHASE I PLANS\Grading\GR1.dwg GR2 Last Saved: Tue, 21 Jan 2020 By: Chelsi.remme Plotted: Tuesday, January 21, 2020 12:41:58 PM

EL RIO PRESERVE
STORMWATER POLLUTION PREVENTION PLAN
PCRFCD PROJECT No. 5LKMNA
FINAL PLANS

LEGEND
(Items in Legend Not to Scale)

CONTAINMENT AREAS
(Final Location to be Determined by Operator)
Material Storage\Use Area (ADOT 5.7.1\2)
Hazardous Material Area (ADOT 5.7.6)
Concrete Washout Area (ADOT 5.7.8)
Sanitary Facilities (CalTrans WM-9)
Spill Response Equipment (ADOT 5.7.4)

HYDROSEED
(See Hydroseed Mix in Appendix L)
(Permanent Erosion Control Method)

PROPOSED SOIL CEMENT

PERIMETER CONTROL
SEDIMENT CONTROL BERM (ES5)
(Temporary Non-Structural Erosion Control Measure)

INLET PROTECTION
SEDIMENT WATTLE (ES3)
(Temporary Non-Structural Erosion Control Measure)

GRADING LIMITS

EXISTING CONDITIONS FLOW ARROW

PROPOSED HAUL ROUTE

NOTES:
1) Operator will determine final location of Stabilized Construction Entrances according to site conditions. Entrances shall be located where dirt road meets paved road to minimize/eliminate tracking.
2) Sweeping required as secondary measure if trackout past Stabilized Construction Entrances is visible.
3) Hydroseed to be used on disturbed areas and slopes. See SWPPP Book and below for Hydroseed mix.
4) Erosion/Sediment controls will be placed on all side slope boundaries in lieu of sediment basins.
5) Spill response equipment shall be located within the Containment Areas and be accessible. Should an alternate location be determined by Contractor, the new location shall be shown.
6) Disturbed areas where construction halts for a period greater than 14 days will require temporary stabilization measures.
7) Slopes and flow velocities have been checked and are appropriate for the BMP shown at each location.
8) No BMP shall be placed such that ingress and egress access to individual lots is restricted.
9) There are no drywells onsite and no drywells located offsite with the potential to receive stormwater runoff from the site.
10) There are no wetlands within the limits of the project or adjacent to the project.
11) Areas outside the Limits of Disturbance shall remain undisturbed. Should additional areas need to be disturbed, the appropriate parties must be notified. Any project related activities or disturbance beyond the project limits will require historic preservation and cultural resources compliance to have been concluded before any disturbance can occur outside the project limits. The Site Maps/NOI must be updated accordingly.
12) BMPs within Section 404 Jurisdictional Waters are temporary and designed to divert low flow events from the project site as well as contain site flows. Large flows are expected to inundate the entire channel bottom and BMPs will need to be repaired/replaced when flood waters subside.
13) Field modifications to this plan are expected to be made throughout the life of this project. These modifications should be made by a professional taking responsibility for the SWPPP implementation and maintenance. Field changes should indicate project phasing, items necessary due to maintenance and placement of BMP's required to ensure the project meets the conditions of the 2013 Arizona Construction General Permit No. AZG2013-001 and the City of Tucson Stormwater Ordinance.
14) All SWPPP measures shall be installed so as to prevent all stormwater and construction water to be directed into or onto any sanitary sewer facilities within project limits. Addtional measures include, but aren't limited to the use of rain stoppers and manhole covers deemed necessary by PCRWRD.

Hydroseed Mix for El Rio Preserve

Santa Cruz RiverLow/MediumFloweringMix		
Scientific Name	**Common Name**	**Qty (lbs/ac)**
Atriplex elegans	Wheelscale	0.25
Bahia absinthifolia	Bahia	0.25
Baileya multiradiata	Desert Marigold	0.5
Bouteloua aristidoides	Needle Grama	1.5
Celtis pallida	Desert Hackberry	0.5
Chilopsis linearis	Desert Willow	0.5
Digitaria californica	Arizona Cottontop	0.25
Dyssodia pentachaeta	Dyssodia	0.25
Encelia farinosa	Brittlebush	0.5
Encelia frutescens	Green Brittlebush	0.5
Eschscholtia mexicana	Mexican Gold Poppy	1.5
Gutierrezia sarothrae	Snakeweed	0.25
Hymenoclea salsola	Cheesebush	0.25
Hymenothrix wislizenii	Thimblehead	0.25
Kallstroemia grandiflora	Arizona Poppy	0.5
Larrea tridentata	Creosote	0.5
Lepidium lasiocarpa	Peppergrass	0.25
Lesquerella gordonii	Bladderpod	0.5
Lupinus sparsiflorus	Desert Lupine	0.25
Lycium andersonii	Anderson'sWolfberry	0.25
Lycium fremontii	Fremont'sWolfberry	0.25
Machaeranthera pygmaea	Pygmy Blue Aster	0.25
Machaeranthera tephrodes	Santa Cruz Blue Aster	0.25
Muhlenbergia porteri	Bush Muhly	0.25
Pectis papposa	Pectis	0.25
Penstemon parryi	Parry Penstemon	1
Plantago insularis	Indian Wheat	2
Senna covesii	Desert Senna	2.5
Setaria macrostachys	Plains Bristlegrass	1
Sphaeralcea ambigua	Globemallow "Colors"	0.5
Sporobolis cryptandra	Sand Dropseed	1
Verbesinia encelioides	Golden Crownbeard	0.5
Xantisma gracilis	Slender Goldenweed	0.25
Zizyphus obtusifolia	Greythorn	0.25

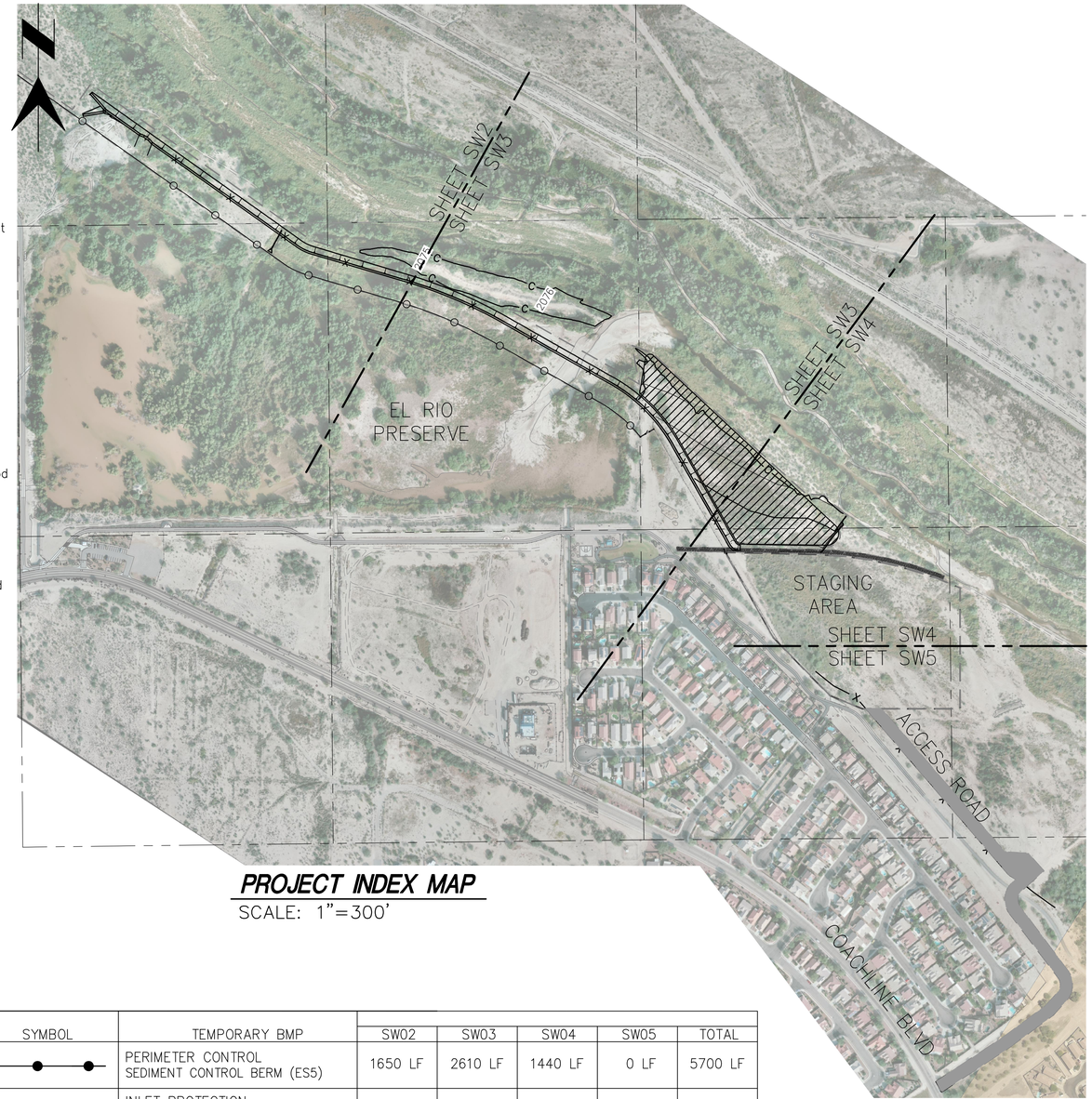

PROJECT INDEX MAP
SCALE: 1"=300'

SYMBOL	TEMPORARY BMP	SW02	SW03	SW04	SW05	TOTAL
	PERIMETER CONTROL SEDIMENT CONTROL BERM (ES5)	1650 LF	2610 LF	1440 LF	0 LF	5700 LF
	INLET PROTECTION SEDIMENT WATTLE (9") (ES3)	80 LF	0 LF	0 LF	0 LF	80 LF
	HYDROSEED (ES4)	3.6 AC	7.4 AC	12.0 AC	6.7 AC	29.7 AC

Contact Arizona 811 at least two full working days before you begin excavation
ARIZONA811
Call 811 or click Arizona811.com

SCALES: HORIZ. 1"=200' VERT. N/A

SHEET SW1 OF SW5

SUZANNE SHIELDS, P.E., DIRECTOR

DESIGNED:	CR	1/2020
DRAWN:	CR/KL/EA	1/2020
CHECKED:	KL	1/2020
PROJ. ENG.:	CR	1/2020

NO.	REVISION DESCRIPTION	DIV. ENGINEER	DATE

Registered Professional Engineer (Civil) CERTIFICATE NO. 46896 KEVIN L. LETENDRE Date Signed 1/24/20 ARIZONA U.S.A. Expires 6/30/20

PSOMAS
333 E. Wetmore Road, Suite 450
Tucson, Arizona 85705
(520) 292-2300 (520) 292-1290 (FAX)

PIMA COUNTY REGIONAL FLOOD CONTROL DISTRICT

STORMWATER POLLUTION PREVENTION PLAN FOR EL RIO PRESERVE BANK PROTECTION

PIMA COUNTY W.O. 5LKMNA

T:\PFC180101\ENGR\SHEETS\PHASE I PLANS\SWPPP\C-SW-ER.dwg SW1 Last Saved: Tue, 21 Jan 2020 By: Chelsi.remme Plotted: Tuesday, January 21, 2020 12:42:35 PM

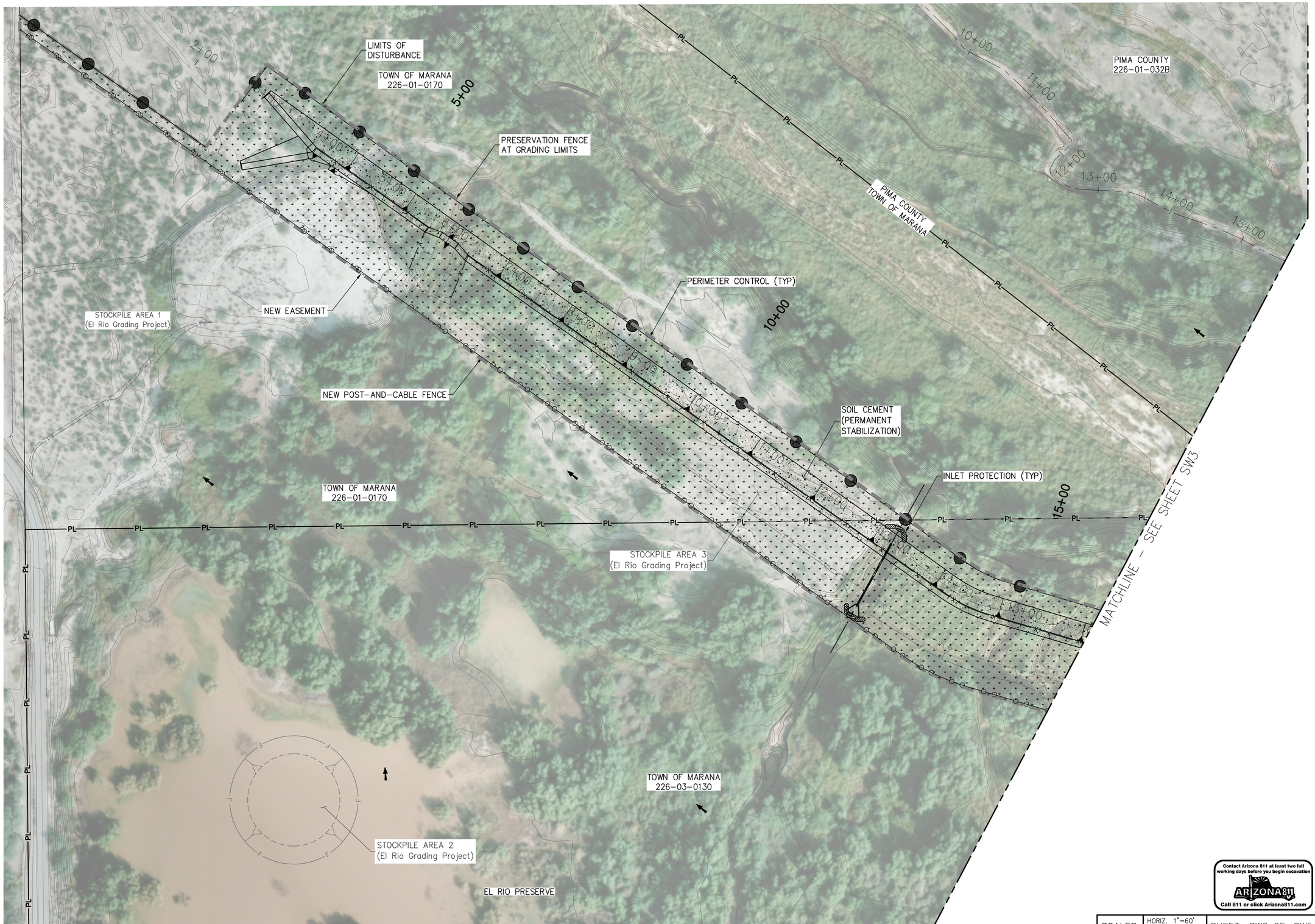

SCALES: HORIZ. 1"=60' VERT. N/A

SHEET SW2 OF SW5

SUZANNE SHIELDS, P.E., DIRECTOR

DESIGNED:	CR
DRAWN:	CR/KL/EA
CHECKED:	KL
PROJ. ENG.:	CR

DATE 1/2020 1/2020 1/2020 1/2020

NO.	REVISION DESCRIPTION	DIV. ENGINEER	DATE

Registered Professional Engineer (Civil) CERTIFICATE NO. 46896 KEVIN U. LETENDRE Date Signed 1/21/20 Expires 06/30/20 Arizona U.S.A.

PSOMAS
333 E. Wetmore Road, Suite 450
Tucson, Arizona 85705
(520) 292-2580 (520) 292-1290 (FAX)

PIMA COUNTY REGIONAL FLOOD CONTROL DISTRICT

STORMWATER POLLUTION PREVENTION PLAN FOR EL RIO PRESERVE BANK PROTECTION

PIMA COUNTY W.O. 5LKMNA

T:\7PFC180101\ENGR\SHEETS\PHASE I PLANS\SWPPP\C-SW-ER.dwg SW2 Last Saved: Tue, 21 Jan 2020 By: Chelsi.remme Plotted: Tuesday, January 21, 2020 12:42:50 PM

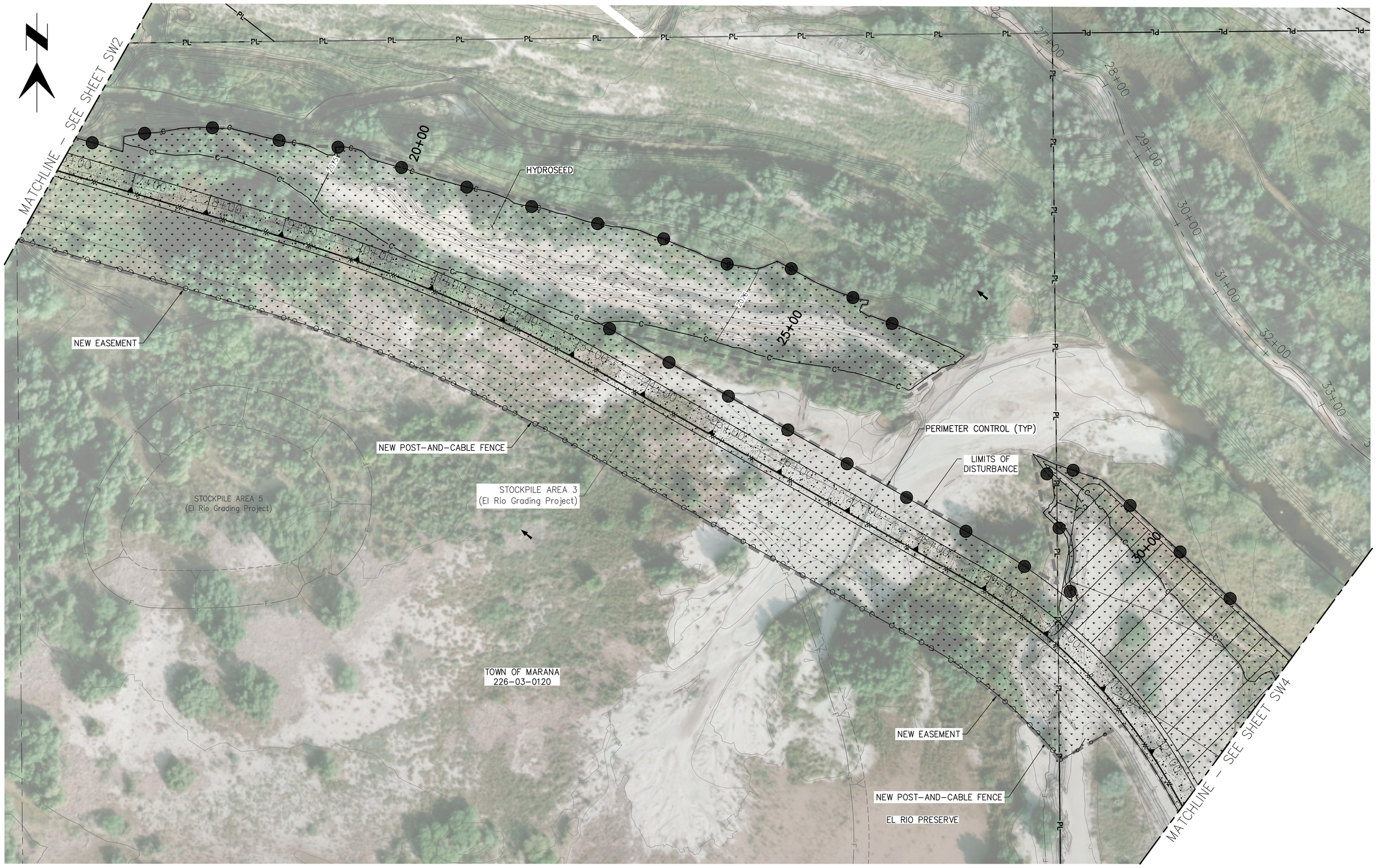

Contact Arizona 811 at least two full working days before you begin excavation
ARIZONA811
Call 811 or click Arizona811.com

SCALES:	HORIZ. 1"=60'
	VERT. N/A

SHEET SW3 OF SW5

SUZANNE SHIELDS, P.E., DIRECTOR

		DATE
DESIGNED:	CR	1/2020
DRAWN:	CR/KL/EA	1/2020
CHECKED:	KL	1/2020
PROJ. ENG.:	CR	1/2020

NO.	REVISION DESCRIPTION	DIV. ENGINEER	DATE

Registered Professional Engineer (Civil)
CERTIFICATE NO. 46896
KEVIN U. LETENDRE
Date Signed 1/21/20
ARIZONA U.S.A.
Series 09/12

PSOMAS
333 E. Wetmore Road, Suite 450
Tucson, Arizona 85705
(520) 792-2300 (520) 292-1290 (FAX)

PIMA COUNTY REGIONAL FLOOD CONTROL DISTRICT

STORMWATER POLLUTION PREVENTION PLAN
FOR
EL RIO PRESERVE
BANK PROTECTION

PIMA COUNTY W.O. 5LKMNA

PAGE 20 OF 22

T:\7PFC180101\ENGR\SHEETS\PHASE I PLANS\SWPPP\C-SW-ER.dwg SW3 Last Saved: Tue, 21 Jan 2020 By: Chelsi.remme Plotted: Tuesday, January 21, 2020 12:43:05 PM

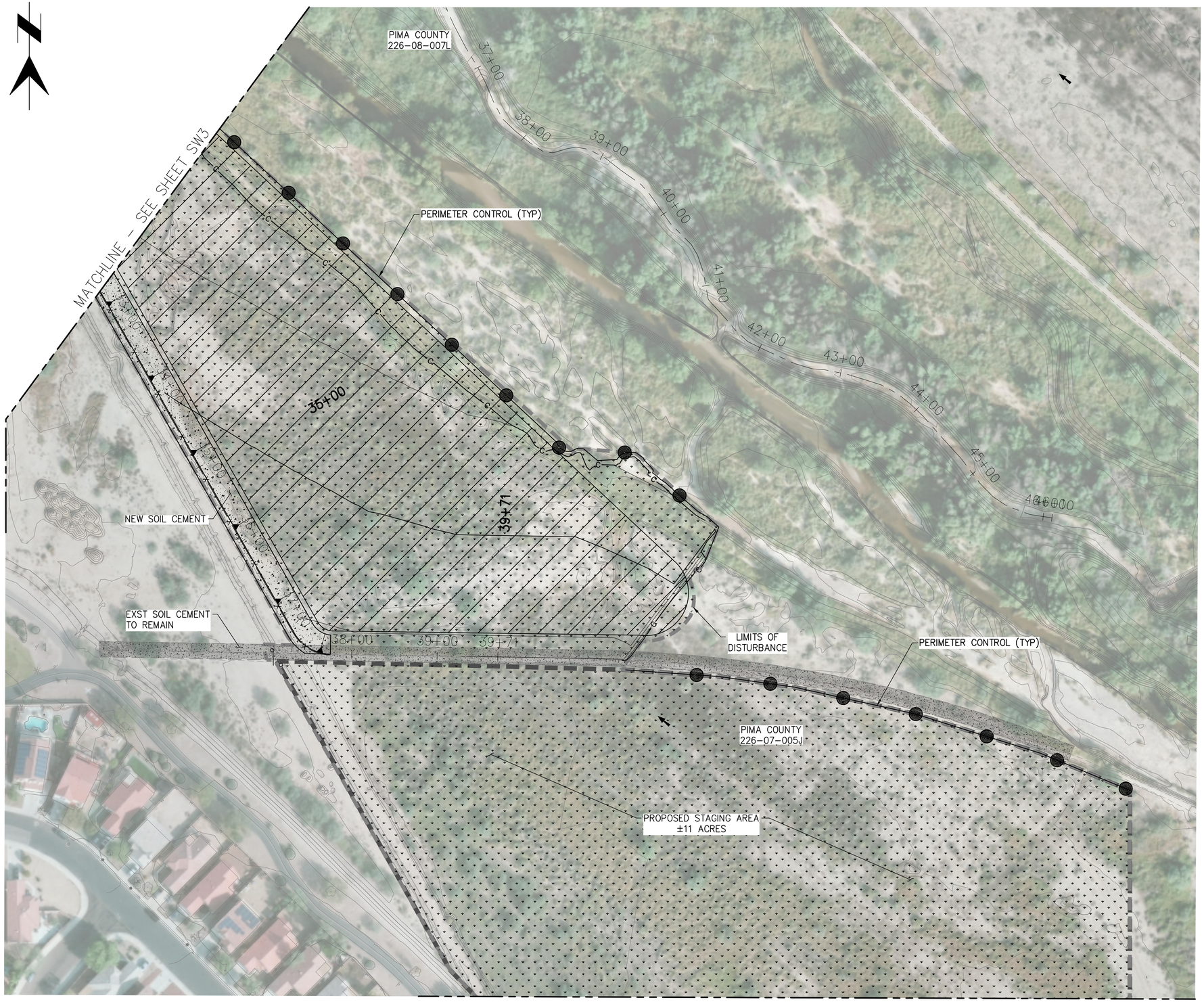

Contact Arizona 811 at least two full working days before you begin excavation
ARIZONA811
Call 811 or click Arizona811.com

SCALES: HORIZ. 1"=60' VERT. N/A

SHEET SW4 OF SW5

PAGE 21 OF 22

PIMA COUNTY REGIONAL FLOOD CONTROL DISTRICT

STORMWATER POLLUTION PREVENTION PLAN
FOR
EL RIO PRESERVE
BANK PROTECTION

PSOMAS
333 E. Wetmore Road, Suite 450
Tucson, Arizona 85705
(520) 592-2300 (520) 292-1290 (FAX)

Registered Professional Engineer (Civil)
CERTIFICATE NO. 46896
KEVIN U. LETENDRE
Date Signed 01/21/20
State of Arizona, U.S.A.

NO.	REVISION DESCRIPTION	DIV. ENGINEER	DATE

		DATE
DESIGNED:	CR	1/2020
DRAWN:	CR/KL/EA	1/2020
CHECKED:	KL	1/2020
PROJ. ENG.:	CR	1/2020

SUZANNE SHIELDS, P.E., DIRECTOR

PIMA COUNTY W.O. 5LKMNA

T:\7PFC180101\ENGR\SHEETS\PHASE I PLANS\SWPPP\C-SW-ER.dwg SW4 Last Saved: Tue, 21 Jan 2020 By: Chelsi.remme Plotted: Tuesday, January 21, 2020 12:43:19 PM

MATCHLINE – SEE SHEET SW4

MATCHLINE – SEE BELOW LEFT

MATCHLINE – SEE ABOVE RIGHT

Contact Arizona 811 at least two full working days before you begin excavation
ARIZONA811
Call 811 or click Arizona811.com

SCALES: HORIZ. 1"=60' VERT. N/A

SHEET SW5 OF SW5

SUZANNE SHIELDS, P.E., DIRECTOR

		DATE
DESIGNED:	CR	1/2020
DRAWN:	CR/KL/EA	1/2020
CHECKED:	KL	1/2020
PROJ. ENG.:	CR	1/2020

NO.	REVISION DESCRIPTION	DIV. ENGINEER	DATE

Registered Professional Engineer (Civil) CERTIFICATE NO. 46896 KEVIN U. LETENDRE Date Signed 1/21/20 STATE OF ARIZONA

PSOMAS
333 E. Wetmore Road, Suite 450
Tucson, Arizona 85705
(520) 592-2500 (520) 292-1290 (FAX)

PIMA COUNTY REGIONAL FLOOD CONTROL DISTRICT

STORMWATER POLLUTION PREVENTION PLAN
FOR
EL RIO PRESERVE
BANK PROTECTION

PIMA COUNTY W.O. 5LKMNA

PAGE 22 OF 22

T:\7PFC180101\ENGR\SHEETS\PHASE I PLANS\SWPPP\C-SW-ER.dwg SW5 Last Saved: Tue, 21 Jan 2020 By: Chelsi.remme Plotted: Tuesday, January 21, 2020 12:43:44 PM

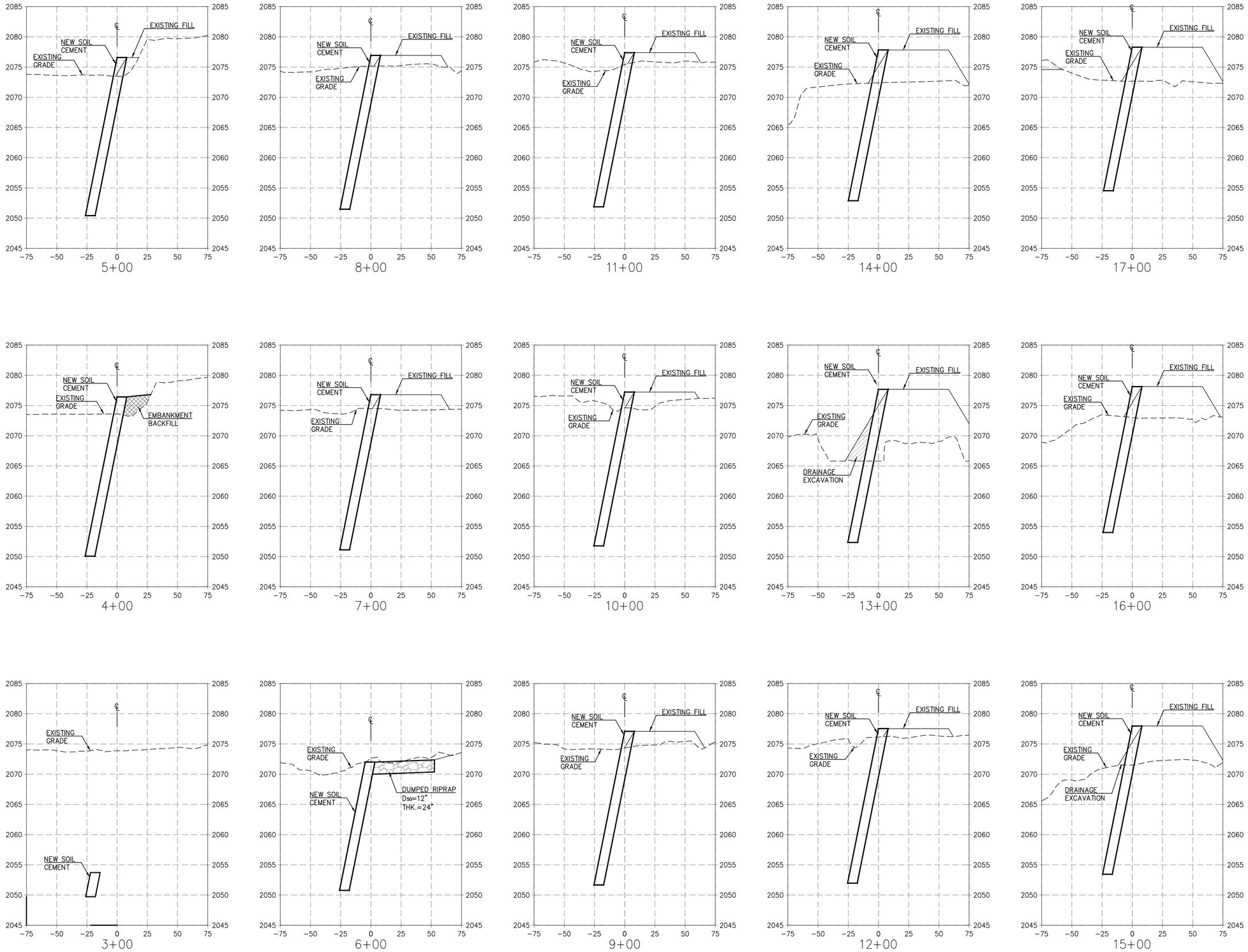

NOTE:
EXISTING FILL WILL BE PLACED AS PART OF CHANNEL MAINTENANCE UNDER A SEPARATE PROJECT.

Contact Arizona 811 at least two full working days before you begin excavation
ARIZONA811
Call 811 or click Arizona811.com

SCALES:	HORIZ. 1"=40'
	VERT. 1"=8'

SHEET XS1 OF XS3

PAGE 1 OF 3

SUZANNE SHIELDS, P.E., DIRECTOR

		DATE
DESIGNED:	CR	1/2020
DRAWN:	CR/KL/EA	1/2020
CHECKED:	KL	1/2020
PROJ. ENG.:	CR	1/2020

NO.	REVISION DESCRIPTION	DIV. ENGINEER	DATE

Registered Professional Engineer (Civil) CERTIFICATE NO. 46896 KEVIN U. LETENDRE Date Signed 1/21/20 ARIZONA U.S.A. Expires 12/31/20

PSOMAS
333 E. Wetmore Road, Suite 450
Tucson, Arizona 85705
(520) 292-2300 (520) 292-1290 (FAX)

PIMA COUNTY REGIONAL FLOOD CONTROL DISTRICT

CROSS SECTIONS
FOR
EL RIO PRESERVE
BANK PROTECTION

PIMA COUNTY W.O. 5LKMNA

I:\PFC18010\ENGR\SHEETS\PHASE I PLANS\Cross-Sections\XS1-XS3.dwg XS1 Last Saved: Tue, 21 Jan 2020 By: Chelsi.remme Plotted: Tuesday, January 21, 2020 12:43:56 PM

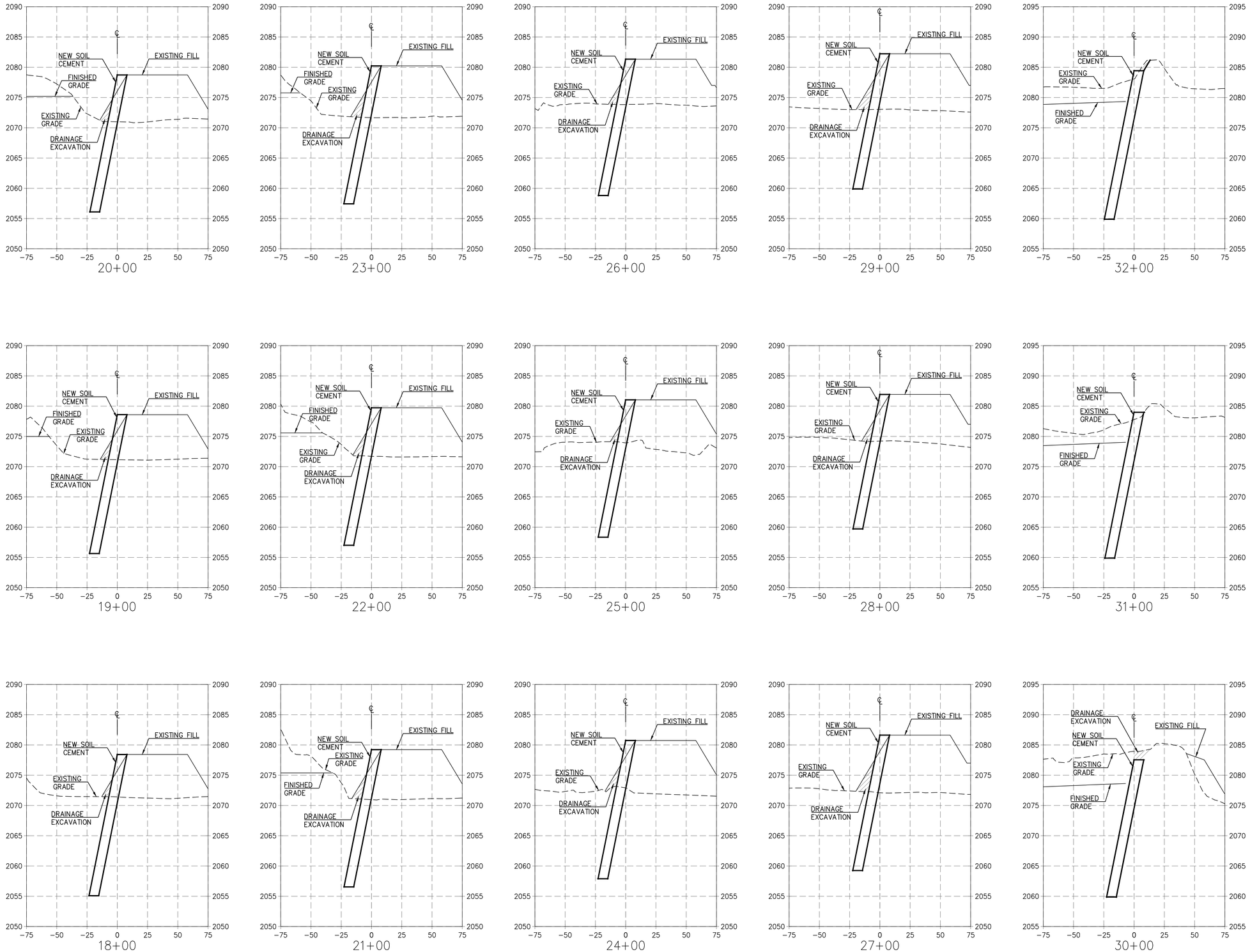

NOTE:
EXISTING FILL WILL BE PLACED AS PART OF CHANNEL MAINTENANCE UNDER A SEPARATE PROJECT.

Contact Arizona 811 at least two full working days before you begin excavation
ARIZONA811
Call 811 or click Arizona811.com

SCALES:	HORIZ. 1"=40'	SHEET XS2 OF XS3	PAGE 2 OF 3
	VERT. 1"=8'		

PIMA COUNTY REGIONAL FLOOD CONTROL DISTRICT

SUZANNE SHIELDS, P.E., DIRECTOR

		DATE
DESIGNED:	CR	1/2020
DRAWN:	CR/KL/EA	1/2020
CHECKED:	KL	1/2020
PROJ. ENG.:	CR	1/2020

NO.	REVISION DESCRIPTION	DIV. ENGINEER	DATE

Registered Professional Engineer (Civil) CERTIFICATE NO. 46896 KEVIN U. LETENDRE Date Signed 1/21/20 ARIZONA, U.S.A.

PSOMAS
333 E. Wetmore Road, Suite 450
Tucson, Arizona 85705
(520) 292-2300 (520) 292-1290 (FAX)

CROSS SECTIONS
FOR
EL RIO PRESERVE
BANK PROTECTION

PIMA COUNTY W.O. 5LKMNA

T:\PFC180101\ENGR\SHEETS\PHASE I PLANS\Cross-Sections\XS1-XS5.dwg XS2 Last Saved: Tue, 21 Jan 2020 By: Chelsi.remme Plotted: Tuesday, January 21, 2020 12:44:00 PM

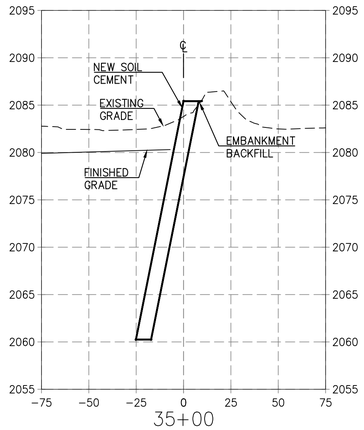

35+00

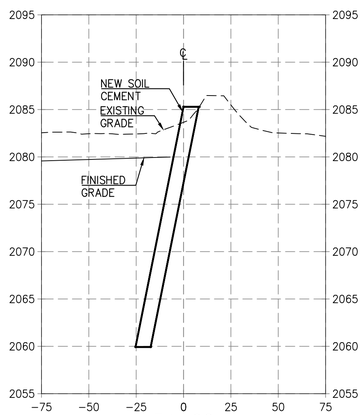

34+00

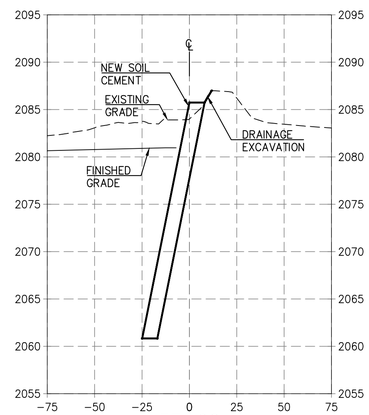

37+00

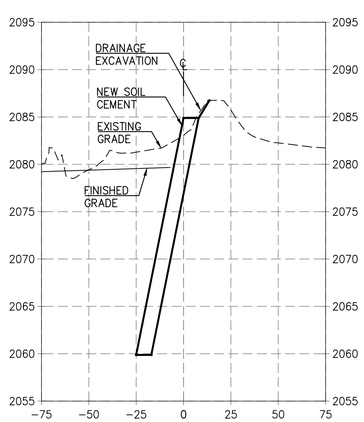

33+00

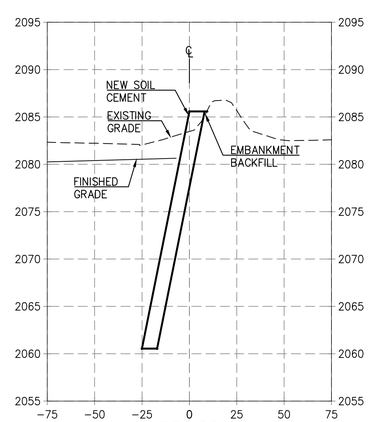

36+00

NOTE:
EXISTING FILL WILL BE PLACED AS PART OF CHANNEL MAINTENANCE UNDER A SEPARATE PROJECT.

Contact Arizona 811 at least two full working days before you begin excavation
ARIZONA811
Call 811 or click Arizona811.com

SCALES:	HORIZ. 1"=40'
	VERT. 1"=8'

SHEET XS3 OF XS3

PAGE 3 OF 3

PIMA COUNTY REGIONAL FLOOD CONTROL DISTRICT

SUZANNE SHIELDS, P.E., DIRECTOR

		DATE
DESIGNED:	CR	1/2020
DRAWN:	CR/KL/EA	1/2020
CHECKED:	KL	1/2020
PROJ. ENG.:	CR	1/2020

NO.	REVISION DESCRIPTION	DIV. ENGINEER	DATE

Registered Professional Engineer (Civil)
CERTIFICATE NO. 46896
KEVIN U. LETENDRE
Date Signed 1/21/20
ARIZONA U.S.A.
Expires 12/31/20

PSOMAS
333 E. Wetmore Road, Suite 450
Tucson, Arizona 85705
(520) 292-2300 (520) 292-1290 (FAX)

CROSS SECTIONS
FOR
EL RIO PRESERVE
BANK PROTECTION

PIMA COUNTY W.O. 5LKMNA

T:\PFC180101\ENGR\SHEETS\PHASE I PLANS\Cross-Sections\XS1-XS5.dwg XS3 Last Saved: Tue, 21 Jan 2020 By: Chelsi.remme Plotted: Tuesday, January 21, 2020 12:44:05 PM