PSOMAS

Pantano Wash Permanent Bank Protection Basis of Design Report

Speedway Blvd. to Tanque Verde Road

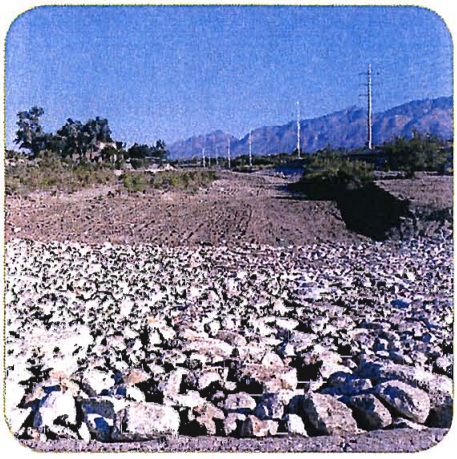

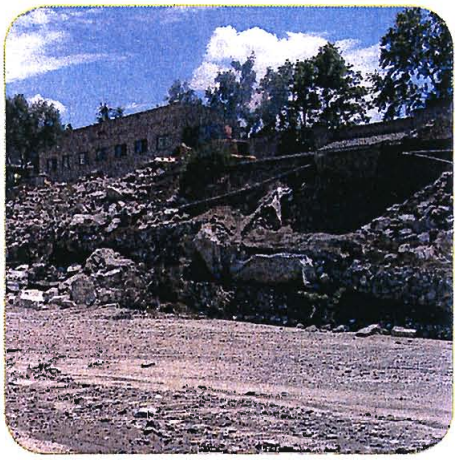

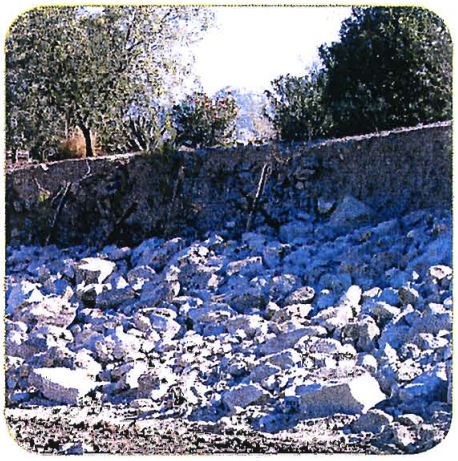

Submitted To:

Pima County Regional Flood Control District

REGISTERED PROFESSIONAL ENGINEER (CIVIL)
CERTIFICATE NO. 33984
MICHAEL E. DALY
DATE SIGNED 11/5/09
ARIZONA U.S.A.
Expires 9/30/2011

Pima County Regional FLOOD CONTROL DISTRICT

November 24, 2008

Psomas No. 07125-01

PANTANO WASH BANK PROTECTION BASIS OF DESIGN REPORT
November 24, 2008

Table of Contents

SECTION	TITLE	PAGE
1.0	INTRODUCTION	1
1.1	PROJECT LOCATION AND LIMITS	1
1.2	PURPOSE AND SCOPE OF WORK	3
2.0	ASSESSMENT OF HISTORIC CHANNEL CONDITIONS	4
2.1	CHANNEL GEOMORPHOLOGY	4
2.2	TEMPORARY MITIGATION MEASURES	5
3.0	EXISTING CONDITIONS HYDRAULICS	8
3.1	PROJECT HYDROLOGY	8
3.1.1	PANTANO WASH HYDROLOGY	8
3.1.2	TRIBUTARY DRAINAGE HYDROLOGY	8
3.2	EXISTING CONDITIONS HYDRAULIC ANALYSIS	10
3.3	EXISTING CONDITIONS SCOUR ANALYSIS	14
4.0	ASSESSMENT OF EXISTING HYDRAULIC STRUCTURES	17
4.1	SUMMARY OF GEOTECHNICAL INVESTIGATION	17
4.2	BANK PROTECTION	18
4.3	GRADE CONTROL STRUCTURES	20
4.4	TANQUE VERDE BRIDGE	21
5.0	DESIGN CRITERIA, CONSTRAINTS AND CONSIDERATIONS	22
5.1	EXISTING PROPERTY OWNERSHIP AND RIGHT-OF-WAY	22
5.2	EXISTING UTILITIES	24
5.3	ENVIRONMENTAL PERMITTING AND MITIGATION	27
5.4	PROJECT PHASING	30
5.4.1	PHASE I IMPROVEMENTS	30
5.4.2	PHASE II IMPROVEMENTS	31
5.5	BANK STABILIZATION ALTERNATIVES	34
5.6	CHANNEL ALIGNMENT AND ENCROACHMENT	37
5.6.1	BANK PROTECTION ALIGNMENT ALTERNATIVES	37
5.6.2	IMPACTS TO EXISTING FLOODPLAIN	44
5.7	ALIGNMENT ALTERNATIVES SCOUR ANALYSIS	46

REGISTERED PROFESSIONAL ENGINEER (CIVIL)
CERTIFICATE NO. 33984
MICHAEL E. DALY
DATE SIGNED 1/5/09
ARIZONA U.S.A.
Expires 9/30/2011

5.8 LONG-TERM GRADE CONTROL 46
5.9 MAINTENANCE ACCESS AND PEDESTRIAN PATHS 48
5.10 PRELIMINARY CONSTRUCTION COST ESTIMATES 48
6.0 DEVELOPMENT OF DESIGN CONCEPT PLANS 51
6.1 RECOMMENDED ALTERNATIVE 51
6.2 SUMMARY OF DESIGN CRITERIA 52
6.2.1 BANK PROTECTION PROFILE 52
6.2.2 GRADING BEHIND SOIL CEMENT 52
6.2.3 SOIL CEMENT TOE-DOWN DEPTH 53
6.2.4 SIDE TRIBUTARY DRAINAGE 53
6.3 PROJECT STAGING AREA 54

List of Figures

Figure	Title	Location
1	PROJECT LOCATION MAP	2
2	HISTORIC CHANNEL PROFILES	APPENDIX A
3	EXISTING CONDITIONS MAP	7
4	LOCAL TRIBUTARY DRAINAGE	9
5	HEC-RAS ANALYSIS MAP	12
6	PROPERTY OWNERSHIP	23
7	UTILITY CONFLICT MAP	26
8	PROPOSED JURISDICTIONAL LIMITS	29
9	PROJECT CONSTRUCTION PHASING	33
10	PHASE I IMPROVEMENTS	35
11	PHASE II IMPROVEMENTS	36
12	ALIGNMENT ALTERNATIVE 1	39
13	ALIGNMENT ALTERNATIVE 2	40
14	ALIGNMENT ALTERNATIVE 3	42
15	CHANNEL ALIGNMENT ALTERNATIVE 4	43
16	30% PHASED CONCEPT PLANS	APPENDIX M

List of Tables

Table	Title	Page
1	Historic Channel Conditions	5
2	Summary Of Pantano Wash Peak Discharges	8
3	Summary of Local Tributary Drainage	10
4	Summary Of HEC-RAS Results	13
5	Existing Conditions Scour Analysis	16
6	Summary Of Existing Bank Protection	19
7	Summary of HEC-RAS Results for Alignment Alternatives	45
8	Design Scour Depths for Alignment Alternatives	47
9	Preliminary Construction Cost Estimates	50

List of Appendices

A	Figure 2 – Historic Channel Profiles
B	FEMA Flood Damage Mitigation Funding Documentation
C	Tributary Drainage Peak Discharge Calculations (Next Submittal)
D	Existing Conditions Base Sheets
E	Existing Conditions HEC-RAS Analysis
F	Existing Conditions Scour Analysis
G	Project Geotechnical Report
H	Monument Study And Right-Of Way Plans
I	TEP Pole and Soil Cement Bank Protection Information
J	Channel Encroachment HEC-RAS Analysis
K	Alignment Alternatives Scour Analysis
L	Preliminary Linear Park Concept Plans
M	Construction Cost Estimates
N	30% Concept Design Plans

1.0 INTRODUCTION

During the monsoon storms of 2006, record flows were observed in many of the washes and major watercourses in Pima County, including Pantano Wash. The observed peak flow in Pantano Wash measured 15,900 cfs at Broadway Boulevard and occurred on July 31, 2006. This flow corresponded to a return interval between a 10- and 50-year event based on the peak discharges published in the effective Flood Insurance Study (FIS) for Pantano Wash. The event included three distinct large peaks over a three day period. The channel responded to these extended flows by displaying significant lateral migration of the thalweg (low flow channel), which in the northern two-thirds of the project area, was significantly incised before the event. The horizontal migration of the thalweg undercut existing bank protection in three distinct locations, resulting in significant damage. This migration also increased the potential for future damage to existing bank protection by reducing its effective toe-down along segments within the project reach. The flood event resulted in an emergency declaration by FEMA for Pima County and federal funding was provided for the implementation of temporary mitigation measures at four distinct locations within the project reach.

The Pima County Regional Flood Control District (PCRFCD) contracted with Psomas to complete a study of the project reach to assess existing conditions, complete a right-of-way survey, develop alternatives for bank stabilization, develop project phasing, and provide preliminary construction cost estimates. In addition, this project includes the preparation of 30% Concept Plans and detailed hydraulic analysis of the preferred alternative. The 30% Concept Plans will serve as the basis for formal construction documents.

1.1 PROJECT LOCATION AND LIMITS

The overall project limits extend from approximately 400 feet upstream of Speedway Boulevard, to approximately 770 feet downstream of Tanque Verde Road, for a total distance of 6770 feet. Figure 1 provides a Location Map for the project reach.

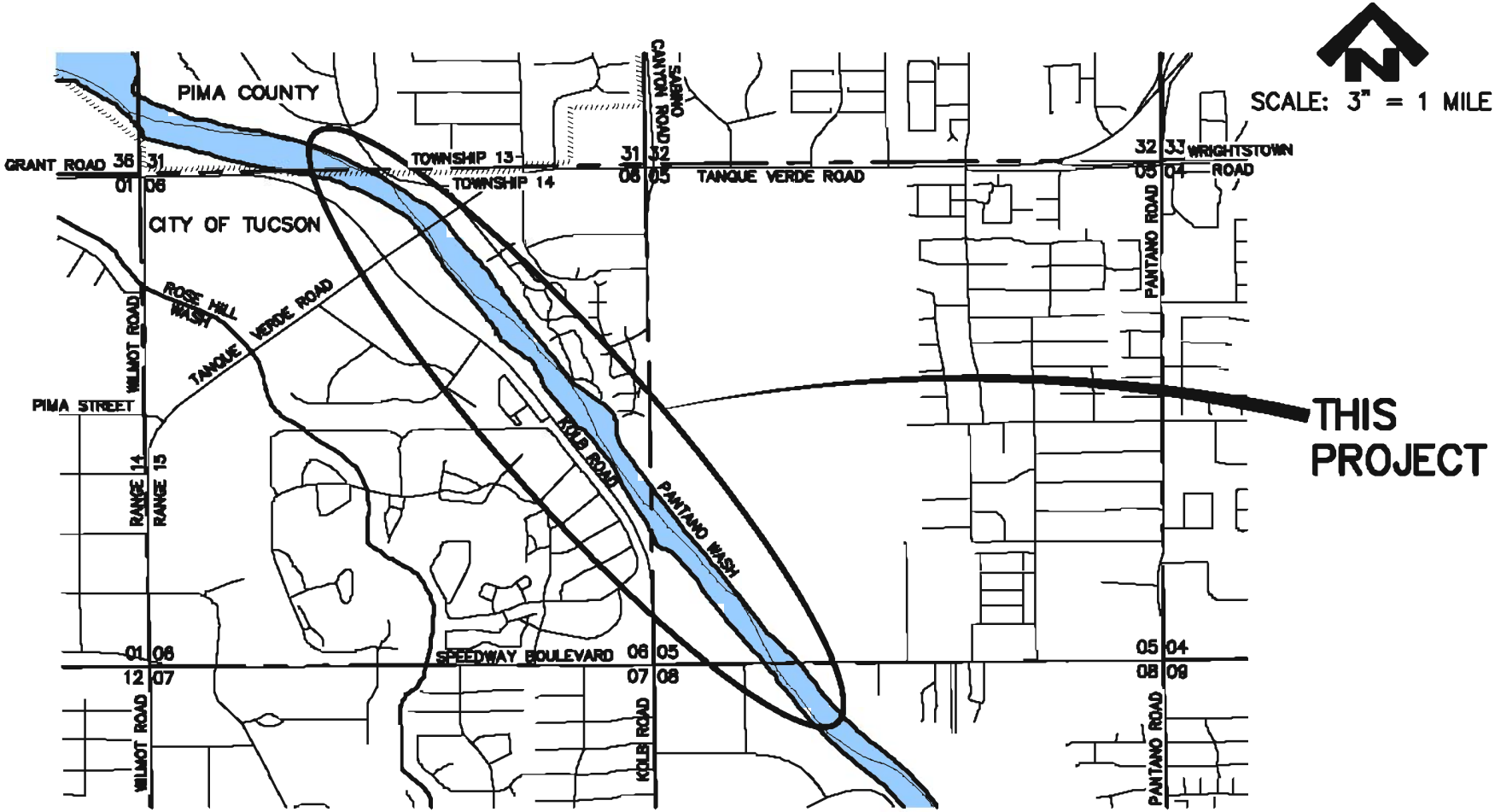

LOCATION MAP

SECTIONS 5 & 6, T14S, R15E, G&SRM
TUCSON, PIMA COUNTY, ARIZONA

FIGURE 1

PSOMAS

1.2 PURPOSE AND SCOPE OF WORK

The purpose of this report is to document the design of bank protection and grade control improvements within the project reach. More specifically, the project scope of work included the tasks described below.

- A new digital terrain model (DTM) and 1-foot topography was generated in December 2007 for the project reach and subject to an extensive QA/QC check by a Psomas Registered Photogrammetrist.

- Field and office work was completed to generate *Monument Study and Right-of-Way Survey* plans for the project limits. This effort established property ownership and boundaries, existing right-of-way and easements, project control for concept and formal design, and will be used as the basis for determining required property takes and extent of temporary construction easements.

- Created an existing conditions HEC-RAS hydraulic model for the project reach using the new DTM to establish existing water surface elevations and flow velocities. The model also served as the basis for hydraulic assessment of proposed bank protection alignment alternatives through the modification of the existing conditions cross-section geometry.

- Completed a geotechnical assessment to verify toe-down depths of existing bank protection segments and assess slope stability in critical reaches where it may impact construction costs and feasibility.

- Established potential project phasing based on project funding elements and the relative risk of failure at individual existing reaches of bank protection.

- Formulated and discussed various bank protection alternatives based on cost and project specific conditions.

- Established potential bank protection alignments and analyzed the hydraulic impacts of each alignment using a modified existing conditions HEC-RAS model. The effort also included a scour analysis of each alternative to establish required toe-down depths.

- Prepared an opinion of probable cost for each alignment alternative.

- Prepared 30% Concept Plans and detailed hydraulic analysis for the selected alternative.

2.0 ASSESSMENT OF HISTORIC CHANNEL CONDITIONS

2.1 CHANNEL GEOMORPHOLOGY

A detailed review was completed of historic aerial topography and photography to make a qualitative assessment of channel conditions within the project reach over time. Data for the reach from the confluence with the Rillito River to the upstream end of the study area (Speedway Boulevard) was available for the years of 1936, 1986 and 1998. Data from 2005 was available from approximately 2000' upstream of the confluence to Speedway Boulevard. Data from 2007 was available for the project reach only. A profile of the observed thalweg for each of these years was plotted relative to a common channel centerline and is presented on Figure 2 in Appendix A. The data for the years 1936 and 1986 was adjusted upward 2.23 ft. to bring it to the NAVD 88 basis of elevation. The grade control structures associated with Mullins Landfill were constructed circa 1984 and have controlled channel degradation in the project area upstream of those structures.

A summary of historic data for the Pantano Wash from the confluence with the Rillito River to the upstream project boundary is provided in Table 1, and includes thalweg elevations at key locations as well as average channel slopes in the reaches from the Mullins Landfill to the Tanque Verde Bridge, and from the bridge to the confluence with the Rillito River. The data indicate a significant overall lowering of the channel thalweg of 6 to 9 feet between 1936 and 1986. The change in elevation varied from 6 to 9 feet between Speedway Boulevard and the confluence with the Rillito River. Much of this drop appears to be attributable to a lowering of the Rillito River, which likely occurred in response to development in the contributing watershed and changes in floodplain characteristics. The average slope between the Rillito River and Tanque Verde Road remained virtually unchanged during this time period. Upstream of Tanque Verde Road, the slope decreased significantly during the same time period, and consequently experienced even greater degradation.

As displayed in the profiles on Figure 2, the channel favors a break in grade at a point just north of Tanque Verde Road. Downstream of this point, the channel has been relatively stable from at least 1986 to present with only a modest change in slope. The channel upstream of this apparent grade break to the Mullins Landfill grade control has experienced a slope reduction of over twice that observed downstream, and degraded another 5 to 7 feet between 1986 and 1998. Between 1998 and present, the reach upstream of Tanque Verde Road has been relatively stable with minor degradation

occurring in the reach immediately downstream of the Mullins Landfill grade control structure. Based on the available data it appears that the channel underwent significant adjustments over the period from 1936 to 1998. Since 1998 it appears the channel has stabilized and established a relatively constant slope between the Mullins Landfill grade control and the confluence with the Rillito River. Grade control has been constructed on the Rillito River approximately 500 ft. downstream of the confluence with the Pantano Wash. This structure will eliminate the potential for further incising of the Rillito River at the confluence which would likely propagate upstream in the Pantano Wash.

TABLE 1
HISTORIC CHANNEL CONDITIONS

	1936 (Elev)	1986 (Elev)	1998 (Elev)	2005 (Elev)	2007 (Elev)
Confluence with Rillito River	2431.1	2423.9	2424.0	--	--
Tanque Verde Road	2499.1	2494.4	2493.6	2491.0	2492.1
Just Downstream of primary Mullins grade control structure	2528.0	2520.0	2512.5	2507.7	2506.5
Speedway Road	2535.4	2526.4	2522.9	2522.5	2522.5
Average Channel Slope between Tanque Verde Road and the Confluence with the Rillito River	0.58%	0.56%	0.53%	0.50%	--
Average Channel Slope between Tanque Verde Road and the Mullins Landfill Grade Control Structure	0.72%	0.61%	0.50%	0.49%	0.49%

2.2 TEMPORARY MITIGATION MEASURES

The late summer monsoon storms of 2006 resulted in significant and extended flows in the Pantano Wash. Extensive migration of the channel thalweg occurred along several reaches within the project limits, resulting in the undercutting and subsequent failure of existing bank protection at three distinct locations. The flows also resulted in a major scour hole at the downstream most grade control structure associated with the Mullins Landfill bank protection.

An emergency declaration (No. 1660-DR-AZ) was made by FEMA for Pima County as a result of the widespread flooding associated with the monsoon storms. Pima County requested and received FEMA funding under the declaration to place temporary mitigation measures at the damaged locations, as well as along specific reaches where the migration of the channel thalweg created an imminent threat to undamaged bank protection during future events. Figure 3 illustrates the locations of significantly

damaged areas and provides photographs of the in-place mitigation measures. These measures consisted of the placement of dumped riprap at the toe and along the face of the impacted bank protection, as well as within the scour hole associated with the Mullins Landfill grade control structure.

Pima County has secured funds from FEMA to construct permanent bank stabilization for three of the four reaches which received funding for temporary mitigation measures. No funds for the stabilization of the existing Mullins Landfill grade control structure were requested as FEMA does not normally pay for construction or repair of grade control structures. Copies of the original project worksheets for the three permanent bank protection projects are provided in Appendix B.

(1) Pantano Wash Downstream of Tanque Verde Rd. (1989)
PCDOT & PCRFCD
4BPWTQ–P1–S001
Project raised existing soil cement 3.5'

(2) Pantano Wash North of Tanque Verde Rd. (1983)
PCDOT & PCRFCD
4FPWTV–P1–S001
Project replaced existing rock–and–rail with soil cement

(3) Pantano Townhouses (1982)
Pantano Wash Improvements
B126–P1–S002
*910'– 6'0" high Gabions, Rock size D_{50}=15"
*830'– 8'0" high Gabions, Rock size D_{50}=15"

EMERGENCY REPAIRS AT ROCK AND RAIL FAILURE (PANTANO TOWNHOMES)

ROCK AND RAIL AT TRIBUTARY NORTH OF LANDFILL

(4) Pantano Wash Bank Protection (1984)
Adjacent to Vincent M. Mullins Landfill
B125–P1–S001 (E–83–06)
*Grade Control Structure

EMERGENCY REPAIRS AT TOE OF MULLINS LANDFILL SOIL CEMENT

EMERGENCY REPAIRS AT GRADE CONTROL

0 300 600 900

(5) Pantano Wash at Speedway Blvd. (1987)
PCDOT & PCRFCD
4FPWSB–P1–S001
*Soil Cement

(6) Pantano Wash Bridge (1960)
Speeday Blvd Plan and Profile
BG0040–P1–S001

(12) Rock and Rail east bank north of Tanque Verde Bridge
No Record Drwings found.

(13) Rock and Rail west bank north of Tanque Verde Bridge
No Record Drawings found.

(11) Lot 10 Monte Catalina Estates (1984)
Pantano Addtional Bank Protection Improvements
E–83–12
*Gabions–Rock size D_{50}=8"

GABION FAILURE (Kolb Executive Park)

(10) Kolb Executive Park (1981)
Bank Protection Plans
E–81–09
*3'x3' Gabions–Rock Size D_{50}=4"–8"

EMERGENCY REPAIR AT GABION FAILURE (Pantano Executive Park)

(9) West Bank Just South of Tanque Verde Road
No Record Drawings Found

TYPICAL MINOR SCOUR HOLE AT SECONDARY GRADE CONTROL STRUCTURE (Mullins Landfill)

(7) Pantano Wash Improvements (2004)
Kolb Road at Speedway Blvd. (Lowes)
E–2005–002
*Soil Cement

(8) Sunrise Plaza (1984)
Bank Protection West Bank
B–127–P1–S001 (E–84–08)
*Gabions Removed

EXISTING BANK PROTECTION/FEATURES LEGEND
- ROCK AND RAIL
- GABIONS
- SOIL CEMENT
- GRADE CONTROL STRUCTURE
- POWER POLE

TEMPORARY REPAIRS LEGEND
- SEDIMENT BAR EXCAVATION AREA
- RIPRAP AND SOIL BACKFILL

PSOMAS
800 E. Wetmore Road, Suite 110
Tucson, AZ 85719
(520) 292–2300 (520) 292–1290 fax
www.psomas.com

FIGURE 3
EXISTING CONDITIONS
BANK PROTECTION IMPROVEMENTS
TANQUE VERDE BRIDGE TO SPEEDWAY BRIDGE
FOR
PANTANO WASH

PROJ NO: 07125–01 SCALE: HORIZ 1" = 300'
DATE: 05/2008 VERT 1" = N/A 1 OF 1

Engineering • Planning • Environmental • Surveying • Water Resources

T:\07125\01\WATRES\ALBRISE\CAD\Report Figures\Existing Conditions (Figure 3).dwg Figure 3 Mike Daly Mon, 22 Sep 2008, 1:21pm Last Saved By: Mday

3.0 EXISTING CONDITIONS HYDRAULICS

3.1 PROJECT HYDROLOGY

3.1.1 PANTANO WASH HYDROLOGY

The peak discharges for the Pantano Wash were taken directly from the effective Flood Insurance Study (FIS) for Pima County, dated September 1999. No additional hydrologic analysis was completed for the Pantano Wash as part of this study. The reported discharges for the various flood return intervals are provided in Table 2.

TABLE 2
SUMMARY OF PANTANO WASH PEAK DISCHARGES

Return Interval (yrs)	Q_{10}	Q_{25*}	Q_{50}	Q_{100}	Q_{500}
Peak Discharge (cfs)	8,700	14,000	20,000	32,000	64,000

* Extrapolated Value

3.1.2 TRIBUTARY DRAINAGE HYDROLOGY

There are 23 tributary drainages flowing into the Pantano Wash within the project limits. The majority of these tributary flows are from small developed watersheds in adjacent residential and commercial developments. The incorporation of these points of discharge into the future Pantano Wash bank protection shall be considered during the concept design process and addressed in detail during formal design to ensure that no negative impacts occur to existing drainage patterns. The location and type of outfall associated with each tributary drainage has been provided on Figure 4.

Peak discharges for tributary drainages were calculated using the PC-Hydro program distributed by Pima County. Contributing watersheds for each point of concentration have been shown on Figure 4. The hydrologic parameters used in the program were consistent with those presented in the document entitled *Hydrology Manual for Engineering Design and Flood Plain Management within Pima County, Arizona.* Peak discharges were not calculated for existing stormdrain systems which discharge to the Pantano Wash within the project reach. It was assumed that these existing pipes have been properly sized to convey the design discharge and would simply be extended or trimmed as needed to accommodate the new soil cement design. Peak discharge calculation sheets for each tributary watershed have been provided in Appendix C.

TD1 TRIBUTARY DISCHARGE POINT

WATERSHED BOUNDARY

CONCENTRATION POINT	CONTRIBUTING AREA (ACRES)	100-YEAR DISCHARGE (cfs)*	EXISTING STRUCTURE	PROPOSED STRUCTURE
TD1	21.5	168	NONE	DROP INLET/PIPE THROUGH SOIL CEMENT
TD2	21.4	189	CONCRETE SPILLWAY	DROP INLET/PIPE THROUGH SOIL CEMENT
TD3	3.9	34	CONCRETE SPILLWAY	DROP INLET/PIPE THROUGH SOIL CEMENT
TD4	4.7	42	CONCRETE SPILLWAY	DROP INLET/PIPE THROUGH SOIL CEMENT
TD5	16.3	144	CONCRETE SPILLWAY	DROP INLET/PIPE THROUGH SOIL CEMENT
TD6	6.1	54	CONCRETE SPILLWAY	DROP INLET/PIPE THROUGH SOIL CEMENT
TD7	44	303	EARTHEN CHANNEL	1-8'X5' RCBC THROUGH SOIL CEMENT
TD8	--	--	48" RCP	NO ACTION
TD9	1.6	17	NONE	SCUPPER UNDER MAINTENANCE ROAD
TD10	0.7	7.4	NONE	SCUPPER UNDER MAINTENANCE ROAD
TD11	4.2	14	CONCRETE SPILLWAY	GRATE INLET/PIPE THROUGH SOIL CEMENT
TD12	4.8	31	CONCRETE SPILLWAY	GRATE INLET/PIPE THROUGH SOIL CEMENT
TD13	--	--	30" RCP	EXTEND EXISTING PIPE THROUGH SOIL CEMENT
TD14	--	--	24" RCP	EXTEND EXISTING PIPE THROUGH SOIL CEMENT
TD15	--	--	24" RCP	EXTEND EXISTING PIPE THROUGH SOIL CEMENT
TD16	1.7	17	CONCRETE SPILLWAY	SCUPPER UNDER MAINTENANCE ROAD
TD17	1.1	11	CONCRETE SPILLWAY	SCUPPER UNDER MAINTENANCE ROAD
TD18	--	--	24" RCP	EXTEND EXISTING PIPE THROUGH SOIL CEMENT
TD19	--	--	CONCRETE CHANNEL	2-8' x 5' RCBC THROUGH SOIL CEMENT
TD20	--	--	42" RCP W/ FLAPGATE	NO ACTION
TD21	--	--	36" RCP	EXTEND EXISTING PIPE THROUGH SOIL CEMENT
TD22	--	--	42" RCP	EXTEND EXISTING PIPE THROUGH SOIL CEMENT
TD23	--	--	24" RCP	NO ACTION

* Watershed and discharge not calculated for existing storm drains

0 250 500 750

PSOMAS

800 E. Weimare Road, Suite 110
Tucson, AZ 85719
(520) 292-2300 (520) 292-1290 fax
www.psomas.com

FIGURE 4
LOCAL TRIBUTARY DRAINAGE
BANK PROTECTION IMPROVEMENTS
TANQUE VERDE BRIDGE TO SPEEDWAY BRIDGE
FOR
PANTANO WASH

PROJ NO: 07125-01
DATE: 05/2008

TABLE 3
SUMMARY OF LOCAL TRIBUTARY DRAINAGE

CONCENTRATION POINT	CONTRIBUTING AREA (ACRES)	100-YEAR DISCHARGE (cfs)*	EXISTING STRUCTURE	PROPOSED STRUCTURE
TD1	17.8	168	None	Drop Inlet/Pipe Through Soil Cement
TD2	21.4	189	Concrete Spillway	Drop Inlet/Pipe Through Soil Cement
TD3	3.9	34	Concrete Spillway	Drop Inlet/Pipe Through Soil Cement
TD4	4.7	42	Concrete Spillway	Drop Inlet/Pipe Through Soil Cement
TD5	16.3	144	Concrete Spillway	Drop Inlet/Pipe Through Soil Cement
TD6	6.1	54	Concrete Spillway	Drop Inlet/Pipe Through Soil Cement
TD7	67.5	303	Earthen Channel	1-8'x5' RCBC Through Soil Cement
TD8	--	--	48" RCP	No Action
TD9	1.6	17	None	Scupper Under Maintenance Path
TD10	0.7	7.4	None	Scupper Under Maintenance Path
TD11	1.4	14	Concrete Spillway	Grate Inlet/Pipe Through Soil Cement
TD12	3.0	31	Concrete Spillway	Grate Inlet/Pipe Through Soil Cement
TD13	--	--	30" RCP	Extend Existing Pipe Through Soil Cement
TD14	--	--	24" RCP	Extend Existing Pipe Through Soil Cement
TD15	--	--	24" RCP	Extend Existing Pipe Through Soil Cement
TD16	1.7	17	Concrete Spillway	Scupper Under Maintenance Path
TD17	1.1	11	Concrete Spillway	Scupper Under Maintenance Path
TD18	--	--	24" RCP	Extend Existing Pipe Through Soil Cement
TD19	--	--	Concrete Channel	2-8' X 5' RCBC Through Soil Cement
TD20	--	--	42" RCP W/ Flapgate	No Action
TD21	--	--	36" RCP	Extend Existing Pipe Through Soil Cement
TD22	--	--	42" RCP	Extend Existing Pipe Through Soil Cement
TD23	--	--	24" RCP	No Action

3.2 EXISTING CONDITIONS HYDRAULIC ANALYSIS

The existing conditions floodplain for the Pantano Wash was evaluated within the project limits utilizing the 2007 DTM data and the HEC-RAS computer model. The analysis was performed to provide existing conditions flood depths within the project reach, as well as to provide hydraulic data for subsequent scour and sediment transport analysis. The existing conditions model also served as the base model for analyzing the hydraulic impacts of the various alignment alternatives discussed later in this report. These post-construction models were created by the modification of the existing conditions cross-sectional geometry to reflect encroachment by future bank protection, as well as to reflect channel excavation to create uniform channel conditions.

The project reach is currently mapped as Zone AE on FEMA FIRM Panel 04019C2251K and 04019C2252K, which indicates that a detailed study was performed to determine base flood elevations. Data and work maps for the effective Flood Insurance Study (FIS) were provided by PCRFCD and used as a guide for creation of the new HEC-RAS model. Cross-sections in the new model were

located at approximately the same locations and alignments as the effective FIS. Numerous additional cross-sections were added to provide the greater level of detail required for an engineering analysis. Figure 5 shows the location of the HEC-RAS cross-sections, the extents of the revised existing conditions floodplain, and summary results of the HEC-RAS analysis. A more detailed view of the floodplain can be found on the Existing Conditions Base Sheets in Appendix D.

Field reconnaissance was completed to verify the model parameters as presented in the effective FIS. The effective FIS study utilizes a roughness coefficient (Manning's "n" value) in the main channel of 0.025. This value was believed to be low given observed channel conditions. The revised model utilized an "n" value of 0.030 for the channel. The overbank "n" values in the new HEC-RAS model were identical to the effective FIS and are generally inconsequential as flow is contained within the designated bank stations along nearly the entire study reach. The bridge input for the Speedway Boulevard and Tanque Verde Road bridges was derived from available record drawings and field verified with regards to pier layout and sizes. HEC-RAS output data is provided in Appendix E.1.

The results of the analysis indicate an overall lowering of the 100-year water surface elevations (WSELs) in the study reach when compared to the effective FIS that was adopted in 1989 (see Table 4). The exception is just upstream and downstream of the Speedway Bridge where the WSELs have increased as much as 1.8 feet. The revised elevations at the bridge and downstream are still well below the low chord of the bridge structure and the existing bank elevations. The increased WSELs are believed to be the result of differences in modeling methodology. The cross-sections which represent the bridge in the effective FIS are skewed which results in an artificially wider channel cross-section and higher conveyance capacity. The same cross-section in the revised model represents the actual channel width. The general lowering of the WSELs in the remainder of the reach can be attributed to the significant increase in channel cross-sectional area resulting from the incising and subsequent lateral migration of the channel thalweg. This increase in channel conveyance area can be observed on the cross-section plots in Appendix E.2 that show effective FIS cross-sections superimposed over the new HEC-RAS geometry. The effective FIS cross-section data was imported into HEC-RAS and corrected upward 2.23 feet to bring it to the NAVD 88 vertical datum. Between the downstream most Mullins Landfill grade control structure (XSEC 900) and Tanque Verde Road (XSEC 300) the channel bed has lowered 5 feet to 8 feet. The channel lowering downstream of the Tanque Verde Road has been less significant.

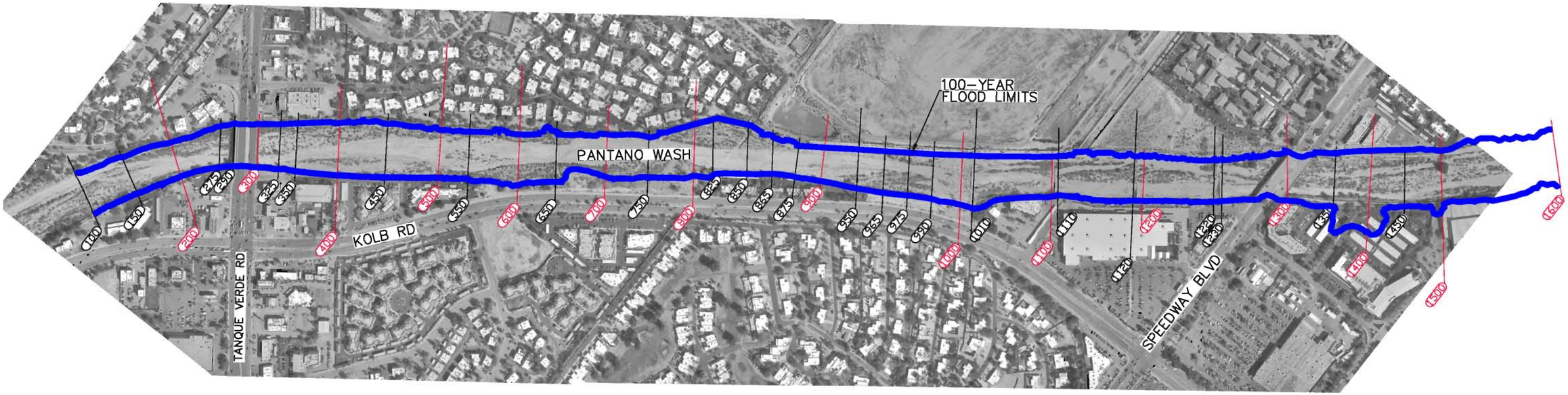

SUMMARY OF HEC-RAS ANALYSIS AND EFFECTIVE FIS WSELs

FIS XS	NEW XS	FIS WSEL(ft) (NGVD 29)	FIS WSEL (ft) (NAVD 88)	New WSEL (ft) (NAVD 88)	Δ WSEL (ft)
AI	1600	2544.90	2547.07	2548.55	1.48
AH	1500	2543.00	2545.17	2545.33	0.16
-	1450	-	-	2544.44	-
AG	1400	2540.30	2542.47	2543.83	1.36
-	1350	-	-	2543.49	-
AF	1300	2537.70	2539.87	2541.64	1.77
-	1230	-	-	2537.84	-
-	1220	-	-	2537.17	-
AE	1200	2532.80	2534.97	2535.67	0.7
-	1120	-	-	2536.02	-
-	1110	-	-	2532.00	-
AD	1100	2530.00	2532.17	2530.57	-1.6
-	1050	-	-	2528.34	-
-	1010	-	-	2526.64	-
AC	1000	2527.10	2529.27	2524.88	-4.39
-	990	-	-	2524.60	-
-	975	-	-	2523.87	-
	965			2523.87	
-	950	-	-	2523.32	-
AB	900	2522.10	2524.27	2522.18	-2.09
-	875	-	-	2519.10	-
-	865	-	-	2518.51	-
-	850	-	-	2518.39	-
-	825	-	-	2517.93	-
AA	800	2517.80	2519.97	2517.30	-2.67
-	750	-	-	2515.69	-
Z	700	2513.90	2516.07	2515.47	-0.6
-	650	-	-	2512.76	-
Y	600	2511.20	2513.37	2510.40	-2.97
-	550	-	-	2507.96	-
X	500	2507.70	2509.87	2507.18	-2.69
-	450	-	-	2506.53	-
W	400	2505.40	2507.57	2505.69	-1.88
-	350	-	-	2505.08	-
-	325	-	-	2504.10	-
V	300	2503.30	2505.47	2503.67	-1.8
-	290	-	-	2502.81	-
-	275	-	-	2502.00	-
U	200	2497.60	2499.77	2498.80	-0.97
-	150	-	-	2497.22	-
-	100	-	-	2496.00	-

NOTE: CROSS-SECTIONS IN RED ARE AT LOCATIONS AND CONSISTENT WITH THE EFFECTIVE FIS

0 250 500 750

PSOMAS
800 E. Wetmore Road, Suite 110
Tucson, AZ 85719
(520) 292-2300 (520) 292-1290 fax
www.psomas.com

FIGURE 5
HEC-RAS ANALYSIS MAP
BANK PROTECTION IMPROVEMENTS
TANQUE VERDE BRIDGE TO SPEEDWAY BRIDGE
FOR
PANTANO WASH

PROJ NO: 07125-01
DATE: 05/2008

Engineering • Planning • Environmental • Surveying • Water Resources

T:\07125\01\WATTES\QLBBASE\DWHS\Report Figures\HEC-RAS Map (Figure 5).dwg Figure 2 Mike Eddy Sat, 20 Sep 2008, 12:19pm Last Saved By: Mdaly

TABLE 4
SUMMARY OF HEC-RAS RESULTS

FIS XS	NEW XS	FIS WSEL (ft) (NGVD 29)	FIS WSEL (ft) (NAVD 88)	NEW WSEL (ft) (NAVD 88)	Δ WSEL (ft)
AI	1600	2544.90	2547.07	2548.55	1.48
AH	1500	2543.00	2545.17	2545.33	0.16
-	1450	-	-	2544.44	-
AG	1400	2540.30	2542.47	2543.83	1.36
-	1350	-	-	2543.49	-
AF	1300	2537.70	2539.87	2541.64	1.77
-	1230	-	-	2537.84	-
-	1220	-	-	2537.17	-
AE	1200	2532.80	2534.97	2535.67	0.7
-	1120	-	-	2536.02	-
-	1110	-	-	2532.00	-
AD	1100	2530.00	2532.17	2530.57	-1.6
-	1050	-	-	2528.34	-
-	1010	-	-	2526.64	-
AC	1000	2527.10	2529.27	2524.88	-4.39
-	990	-	-	2524.60	-
-	975	-	-	2523.87	-
	965			2523.87	
-	950	-	-	2523.32	-
AB	900	2522.10	2524.27	2522.18	-2.09
-	875	-	-	2519.10	-
-	865	-	-	2518.51	-
-	850	-	-	2518.39	-
-	825	-	-	2517.93	-
AA	800	2517.80	2519.97	2517.30	-2.67
-	750	-	-	2515.69	-
Z	700	2513.90	2516.07	2515.47	-0.6
-	650	-	-	2512.76	-
Y	600	2511.20	2513.37	2510.40	-2.97
-	550	-	-	2507.96	-
X	500	2507.70	2509.87	2507.18	-2.69
-	450	-	-	2506.53	-
W	400	2505.40	2507.57	2505.69	-1.88
-	350	-	-	2505.08	-
-	325	-	-	2504.10	-
V	300	2503.30	2505.47	2503.67	-1.8
-	290	-	-	2502.81	-
-	275	-	-	2502.00	-
U	200	2497.60	2499.77	2498.80	-0.97
-	150	-	-	2497.22	-
-	100	-	-	2496.00	-

3.3 EXISTING CONDITIONS SCOUR ANALYSIS

An existing conditions scour analysis was performed along the entire project reach to assess the adequacy and relative risk of failure of existing bank protection during the 100-year design event. The scour analysis was completed using a combination of Equation 6.3 from the City of Tucson document entitled *Standards Manual for Drainage Design and Floodplain Management in Tucson, Arizona* (COT Manual), and the sediment routing capabilities of the HEC-6 computer program. The results of the HEC-6 mobile bed analysis were used in lieu of the City of Tucson general scour equation which is generally not considered applicable to larger regional watercourses such as Pantano Wash. HEC-6 supports one-dimensional sediment transport capabilities that can be used to estimate bed elevation adjustments due to varying sediment transport capacities along a project reach. The model allows for vertical degradation and aggradation, but not horizontal channel adjustment. In other words, the model cannot predict bank erosion or lateral migration. The geometric data used in the HEC-6 sediment transport model was identical to the existing conditions HEC-RAS model. A "fixed bottom" condition was used at appropriate cross-sections to model the existing grade control structures associated with the Mullins Landfill bank protection.

The HEC-6 sediment transport model was run using Toffaletti's equation per direction from PCRFCD, and checked using Yang's equation. Sediment gradation data used in the model was obtained from sieve analyses of soils samples collected in the bed of the Pantano Wash as part of the project geotechnical investigation completed by Terracon. The model was run for the 100-year event using hydrograph ordinates taken from the report entitled *Upper Pantano Wash Sediment Transport Study* completed by Simons and Li in 1989. The incoming sediment load (or boundary condition) was calculated by running the model over a series of discharges assuming no upstream sediment inflow. Numerous "dummy" cross-sections were placed at the upstream end of each model to allow the sediment load to reach a state of equilibrium. The resulting equilibrium sediment loads and distribution were then used as initial boundary conditions.

The remaining elements of Equation 6.3 in the COT Manual were calculated using the hydraulic parameters from the HEC-RAS steady state flow analysis for the 100-year event. The resulting modified scour equation used for this study was as follows:

$$Z_t = 1.3(Z_{mb} + Z_a + Z_{lft})$$

where: Z_t = Design scour depth, excluding long term degradation (Eq. 6.3, COT Manual)
Note: Eq. 6.3 was modified by replacing general scour (Z_{gs}) with HEC-6 mobile bed scour.
Z_{mb} = Mobile bed scour depth at Q_{100} (as predicted by HEC-6)
Z_a = Anti-dune trough depth (Eq. 6.5, COT Manual)
Z_{lft} = Low-flow thalweg depth, (Sec. 6.6.3, COT Manual)
1.3 = Factor of Safety (Sec. 6.6, COT Manual)

Long term scour was not considered in the existing conditions assessment. It was assumed that channel stabilization in the form of permanent grade control would be in place in the next few years, and the channel would be vertically stable over that time period. As shown on Figure 2 in Appendix A, the channel appears to be vertically stable over at least the last 10-years and did not display significant downcutting during the 2006 monsoon storms. Table 5 provides a summary of existing conditions scour depths at each of the HEC-RAS cross-sections. As previously discussed, the general scour component of Eq. 6.3 in the COT Manual was replaced with the mobile bed scour value that is calculated using the HEC-6 program. However, results for total scour that do include the COT general scour component (as opposed to the HEC-6 results) have been provided in Table 5 for the purpose of comparison. A detailed presentation of the individual scour components as well as HEC-6 output is provided in Appendix F.

The relation of the calculated scour depths to existing toe-down depths observed during the geotechnical investigation is presented in Table 6 and discussed in Section 4.2.

TABLE 5
EXISTING CONDITIONS SCOUR ANALYSIS

HEC-RAS XSEC ID	Total Scour Depth (ft) (COT)	Total Scour Depth (ft) (HEC-6)*
1600	8.9	6.5
1500	7.8	5.1
1450	8.0	5.2
1400	8.3	5.1
1350	7.2	4.7
1300	7.8	6.1
1230	10.0	7.4
1220	9.6	9.8
1200	8.3	6.0
1120	7.4	7.9
1110	10.2	7.4
1100	9.5	7.5
1050	9.9	7.1
1010	8.7	6.6
1000	7.6	5.1
990	7.9	7.7
975	8.4	5.3
965	7.4	4.7
950	7.8	5.0
900	6.5	3.1
875**	9.6	6.3
865**	11.4	9.1
850	7.1	6.0
825	7.0	4.7
800	7.5	6.3
750	8.9	5.8
700	7.7	5.0
650	10.0	7.9
600	9.7	8.1
550	8.9	6.3
500	8.5	6.1
450	7.3	5.1
400	7.3	5.0
350	7.3	5.6
325	8.2	5.9
300	8.5	5.8
290	8.0	6.3
275	8.7	5.9
200	8.6	6.5
150	9.7	6.7
100	9.5	6.9

** Eq. 6.3 from COT Manual with general scour component replaced with mobile bed scour from HEC-6 analysis.*
*** Locations of gabion damage during 2006 flood event*

Note: Data related to individual components of scour in Eq. 6.3 of the COT Drainage Manual is provided in Appendix F

4.0 ASSESSMENT OF EXISTING HYDRAULIC STRUCTURES

There are numerous existing segments of bank protection in the project reach. This protection was not built as part of an overall stabilization effort, but was constructed as-needed to protect adjacent development. The existing bank protection varies in type and construction, and includes soil cement, stacked gabions, and rock-and-rail. An attempt was made to gather available record drawings for the existing improvements to evaluate the nature of construction and estimate toe-down depths within the context of the existing channel thalweg and calculated scour depths. The quality of the existing drawings ranged from providing a complete profile of the toe-down tied to established survey control, to just an average toe-depth relative to existing ground at the time of construction. Plans for the Tanque Verde Road and Speedway Boulevard bridges were also obtained and appear to accurately represent observable field conditions.

4.1 SUMMARY OF GEOTECHNICAL INVESTIGATION

Geotechnical investigation for this project was performed by Terracon to establish existing project conditions. There were four general areas of focus as presented below:

- Used backhoe excavations to determine the existing toe-down depth (elevation) of the existing bank protection segments. This information was used in assessing the adequacy or relative level of risk of each individual segment based on the existing conditions scour analysis as presented in Section 3.3. A factor of safety against failure from overturning was also estimated at numerous locations.

- Completed borehole drilling and in-situ soil sampling to establish bank stability at key locations and assessed the risks associated with removal of existing gabion bank protection at Kolb Executive Park prior to construction of new bank protection. The results of this assessment would be similar to other locations where the removal of existing bank protection would expose a nearly vertical slope.

- Collected grab samples within Pantano Wash for sieve sample analyses. The results of these samples were utilized in the HEC-6 sediment transport analysis to estimate general scour along the wash during the design event for both existing conditions and for the developed alternatives.

- Provided recommendations for construction adjacent to the nearly vertical slopes that exist where there was complete failure of the bank protection at Kolb Executive Park.

A copy of the final project geotechnical report and addendum have been provided in Appendix G. The results of the investigation as they relate to specific components of the project are discussed below where relevant.

4.2 BANK PROTECTION

Table 6 provides a summary of the existing bank protection within the project limits as well as the record drawing reference numbers (where applicable) as kept on file by Pima County and City of Tucson. The table also provides a summary of results of the geotechnical analysis performed by Terracon, including the results of excavation to determine the existing depth of toe-down and the calculated factor of safety against overturning. The factor of safety was calculated under conditions of a "dry weather" failure that assumed unsaturated banks and a free-draining system (i.e. no ponding on the banks). Per Terracon, this scenario was believed to be valid for the relatively short duration of high flows in the channel. It was also believed to represent the worse case scenario as flow in the channel would provide hydrostatic pressure that would actually resist overturning.

Record drawings were available for all of the existing bank protection segments within the project limits with the exception of short reaches on the east and west banks upstream and downstream of Tanque Verde Road, and the reach on the west bank just upstream of Speedway Boulevard. Figure 3 provides a visual summary of the location and extent of existing bank protection as well as representative photographs.

TABLE 6
SUMMARY OF EXISTING BANK PROTECTION

Plan Title/Location	Plan #	Date of Plans	Type of Bank Protection	Test Pit Location (1)	Factor of Safety (2)	Elevation of Toe-Down of Bank Protection	Scour Elevation at Test Pit Location (3)
Pantano Wash West bank just south of Speedway bridge	None Found	N/A	Soil Cement	TP-1	2.8	2521.2	2524.8
Pantano Wash at Speedway Blvd. (East Bank)	4FPWSB	1984	Soil Cement	TP-2	4.7	2519.9	2524.7
Pantano Wash Improvements (Lowes)	E-2005-002	2004	Soil Cement	TP-3	13.2	2514.0	2516.3
Pantano Wash Bank Protection Adjacent to Vincent M. Mullins Landfill	E-83-06	1984	Soil Cement	TP-7 TP-4 TP-6	N/A 1.8 12.9	2503.7 2520.5 2510.7	**2503.2** **2516.5** **2499.8**
Sunrise Plaza Bank Protection -Pantano Wash-West Bank	E84-08	1984	Gabions	TP-5	1.3	2512.1	2512.2
Kolb Executive Park	E-81-09	1981	Gabion	N/A	1.3	N/A	N/A
Pantano Townhouses Pantano Wash Improvements	E-82-06	1982	Rock and Rail	TP-8 TP-9	N/A N/A	2503.4 2503.4	**2500.0** **2498.0**
Lot 10 Monte Catalina Estates	E-83-12	1984	Rock and Rail	TP-10	1.4	2492.2	**2490.9**
Pantano Wash just upstream of Tanque Verde Road (East Bank)	None Found	N/A	Rock and Rail	TP-11	1.2	2493.9	**2487.0**
Pantano Wash just downstream of Tanque Verde Road (East Bank)	None Found	N/A	Rock and Rail	--	--	--	--
Pantano Wash just downstream of Tanque Verde Road (West Bank)	None Found	N/A	Rock and Rail	TP-12	1.1	2487.7	**2481.6**
Pantano Wash Downstream of Tanque Verde Rd. (East Bank)	4BPWTQ	1989	Soil Cement	TP-13	2.8	2475.6	2478.1

Notes: (1) Test Pit Locations per Geotechnical Investigation by Terracon. See Appendix G
(2) Factor of Safety per Geotechnical Investigation by Terracon and relates to the stability analysis under "dry" conditions. See Section 4.2
(3) Per existing conditions scour analysis (See Section 3.3)

Bolded values indicate locations where the calculated scour depth is below the observed bank protection toe-down.

The data in Table 6 indicates that toe-down for existing structures is insufficient for much of the existing bank protection, and more specifically for the existing rock-and-rail and gabion improvements. Another consideration is the overall condition and long-term function of the existing bank protection, and in particular, the rock-and-rail. Field observations indicate a range of conditions from no visible damage, to areas where the wire mesh has begun to pull away form the driven piles and tears in the wire fabric have occurred.

4.3 GRADE CONTROL STRUCTURES

The presence of existing grade control structures was researched for the project reach as well as downstream of the project limits to the confluence with the Rillito River. Identified structures within the project reach were limited to those constructed circa 1984 as part of the Mullins Landfill bank protection project (see Figure 3). The downstream most structure is of concern as it has the deepest toe-down and serves as protection for the three upstream structures. An existing channel profile showing the toe-down of the downstream grade control structure can be found on the Existing Conditions Base Sheets in Appendix D.

There were no additional grade control structures identified downstream of the project limits to the confluence with the Rillito River. However, there is an existing structure approximately 500 feet downstream of the confluence which will limit further downcutting that could propagate upstream in the Pantano Wash.

City of Tucson methodology for the calculation of scour at drop structures was utilized to assess the adequacy of the existing toe-down on the Mullins Landfill grade control structures. Calculations are provided in Appendix F. The hydraulic parameters required for analysis were obtained from the existing conditions HEC-RAS model. The calculations indicate adequate toe-down at the three upstream most structures, which if the downstream most structure remain intact should only have an effective drop of 2' or less. A drop of 3' was utilized in the calculations. For the downstream most structure, the existing toe-down is sufficient assuming the temporary riprap energy dissipater is stabilized and made more permanent to prevent a new scour hole from forming, or the toe-down of the existing grade control is extended to an appropriate depth. If neither of these improvements occurs, and the temporary riprap is lost during a major event, then the effective drop height at the structure

would be at least 10 feet. This drop distance results in a calculated scour depth of 16', which is approximately 11' below the existing grade control toe-down depth.

4.4 TANQUE VERDE BRIDGE

Tanque Verde Road bridge as-built information was reviewed in an effort to assess determine if the bridge abutments should be considered "scour critical" and require mitigation measures such as downstream grade control. The bridge was constructed in 1977 and has a total width of 135 feet and a length of 273 feet. The bridge has a 3 (spanning across the wash) by 10 (spanning the width of the bridge) pier configuration. Pier support consists of shallow individual concrete footings which rest on driven pilings extending to an elevation of approximately 2444 feet (46'± below the current channel thalweg). The tops of the pier footings are at an elevation of approximately 2494.49 feet. The bridge abutments are also supported by driven piles that appear from the plans to have only a minimal depth, although the pier tip elevations were not clearly presented. The abutments and associated piles are protected by rock-and-rail protection that appears to be in good condition. However, available record drawings indicate the rock-and-rail has a toe-down of approximately 4' below the channel thalweg, which is presently located at the toe of the west abutment. This depth is above the calculated scour depths of 5.6 ft. and 7.9 ft. at the upstream and downstream ends of the bridge which indicates the potential for the rock-and-rail to be undermined during a large flow event. Abutment (local) scour was not considered to be a significant factor due to the existing geometry that does not significantly constrict flow upstream of the bridge.

Pier scour at the bridge was calculated using the methodology presented in the Federal Highways Administration document entitled HEC-18, Evaluating Scour at Bridges (2001). The purpose of the evaluation was to compare the existing versus proposed conditions to determine if there would be a significant increase in pier scour depth which might warrant further investigation. An evaluation by a structural engineer of the adequacy existing pier depth was not completed as part of this report. Pier scour for the 100-year event was calculated to be 14.9 ft. for existing conditions and 14.2 ft. for the recommended alternative. Both calculations assume a doubling of pier width due to debris loading. The decrease in computed scour for the post-construction condition can be attributed to the lower velocities and WSELs associated with channel excavation.

5.0 DESIGN CRITERIA, CONSTRAINTS AND CONSIDERATIONS

The key to the development of viable alternatives, reliable construction cost estimates, and ultimately a sound and constructible design, is the identification of relevant design criteria and constraints. The following sections discuss the issues related to the project that will have the most impact on the formulation of design alternatives and ultimately the final design and construction cost.

5.1 EXISTING PROPERTY OWNERSHIP AND RIGHT-OF-WAY

The Psomas survey department prepared *Monument Study and Record of Survey* drawings for the project limits. The purpose of the survey was to establish property ownership and boundaries, identify existing easements and rights-of-way, create base mapping for design, and to serve as the basis for determining the location and extent of property takes required to accommodate construction and maintenance of a given bank protection alignment. Figure 6 provides a summary of existing property ownership within the project limits. A half-size copy of the *Monument Study and Record of Survey* drawings has been provided in Appendix H. The property lines, easements, and ownership have also been included on the Existing Conditions Base Maps provided in Appendix D.

As shown on Figure 6, much of the current channel and area directly adjacent to the channel is not owned or controlled by Pima County. The most critical parcel from a construction perspective is Parcel #3 (as shown on Figure 3) which is currently owned by Unisource (or Tucson Electric Power). Acquisition of this parcel will be critical regardless of the selected alignment alternative. Acquisition of a significant portion of the Pantano Townhomes common area might also be critical depending on the selected alignment alternative.

The required takes and easements for Phase I of the project have been identified. The Psomas survey department has prepared legal descriptions for each of the takes and easements that have been reviewed and accepted by the Pima County Survey Dept. and are currently being processed by the Real Property department. A figure that summarizes the proposed property takes and easements has been provided in Appendix H.

Parcel ID #	Parcel Number	Parcel Owner
1	133-15-316B	LA COURSIERE VERNON P & BARBARA A JT/RS
2	133-15-316A	STEWART TITLE & TRUST R 0988
3	133-15-3290	UNISOURCE ENERGY CORPORATION, TAX DIRECTOR
4	133-15-3140	PIMA COUNTY FLOOD CONTROL DISTRICT
5	133-15-312B	THOMPSON SALLIE L TR
6	133-15-3130	DANA PROPERTY MANAGEMENT LLC
7	133-15-312A	THOMPSON SALLIE L TR
8	133-15-192A	PANTANO TOWNHOMES ASSN INC
9	133-14-2370	CITY OF TUCSON
10	133-11-002D	CITY OF TUCSON
11	133-11-003L	CITY OF TUCSON
12	133-11-003J	CITY OF TUCSON
13	133-23-3790	EAST SPEEDWAY LLC
14	133-23-102F	PIMA COUNTY FLOOD CONTROL DISTRICT
15	133-23-102G	PIMA COUNTY FLOOD CONTROL DISTRICT
16	133-23-1460	WCCP I FINANCE DRIVE LLC 40% & EDI OCEAN LLC 20% & WRM INVESTMENTS LLC 20% & PVP INVESTMENTS LLC 20%
17	133-23-1340	B J R INVESTMENTS INC, ATTN: TEM CORP
18	133-11-010B	CITY OF TUCSON
19	133-11-010A	SUNRISE SPEEDWAY LLC, ATTN: VANTAGE PROPERTY INVESTORS
20	133-11-0110	SUNRISE LG LLC, ATTN: VANTAGE PROPERTY INVESTORS STUART JS GULLAND
21	133-11-008A	SUNRISE LG LLC, ATTN: VANTAGE PROPERTY INVESTORS STUART JS GULLAND
22	133-11-0130	SUNRISE OFFICE INVESTMENT LLC, ATTN: FENTON INVESTMENT CO
23	133-11-0140	LAWYERS TITLE OF AZ TR 7610-T, ATTN: FAIRFAX MGMT CO LLC
24	133-11-003G	PIMA COUNTY FLOOD CONTROL DISTRICT
25	133-14-236G	PIMA COUNTY FLOOD CONTROL DISTRICT
26	133-14-236H	PIMA COUNTY FLOOD CONTROL DISTRICT
27	133-14-8150	KOLB EXECUTIVE PARK OWNERS ASSN
28	133-15-3270	PIMA COUNTY
29	133-42-634H	TAYLOR KOLB LLC
30	133-42-634K	KOLB PLAZA LLC
31	133-42-634P	KOLB PLAZA LLC
32	133-42-634N	KOLB PLAZA LLC
33	133-42-634L	EAST TANQUE VERDE STORAGE LLC
34	133-42-634M	ELITE PERFORMANCE LLC
35	133-15-3170	RANGER PROPERTIES LLC
36	133-15-3170	HAZELWOOD PROPERTIES INC, ATTN: VICORP RESTAURANTS INC, ATTN: TAX DEPT
PC	99999993	PUBLIC LAND AREA DRAINAGEWAY

CITY OF TUCSON

PIMA COUNTY

*All unshaded parcels are privately owned

0 250 500 750

PSOMAS
800 E. Wetmore Road, Suite 110
Tucson, AZ 85719
(520) 292-2300 (520) 292-1290 fax
www.psomas.com

FIGURE 6
PROPERTY OWNERSHIP MAP
BANK PROTECTION IMPROVEMENTS
TANQUE VERDE BRIDGE TO SPEEDWAY BRIDGE
FOR
PANTANO WASH

PROJ NO: 07125-01
DATE: 04/2008

T:\07125\01\WATRES\QLBBASE\EXHIB\Report Figures\Prop Ownership (Figure 6).dwg Figure 2 Mike Daly Sun, 04 Jan 2009, 5:42pm Last Saved By: Mdaly

5.2 EXISTING UTILITIES

Existing underground utilities within the project limits were mapped using available record drawings and any utility surface features collected as part of the existing topographic and culture survey. The locations and approximate alignments of existing utilities have been shown on Figure 7. Potential conflicts with existing water mains, large power poles, and a major sanitary sewer have been identified within the project limits. However, proper planning and coordination during formal design will help ensure that these conflicts do not become a major issue during construction. Psomas recommends that potholing be completed as part of the final design process to better identify and characterize the potential conflict, and provide the data needed for a sound design.

Two major reclaimed water mains (24" and 30"), and a 24" potable water main will be in direct conflict with the proposed bank protection improvements regardless of the selected alignment. The location of the anticipated conflicts, as well as an estimate of the vertical separation based the existing record drawings from Tucson Water and estimated toe-down depths of the new bank protection are provided on Figure 7. Most of the potential conflicts with the proposed bank protection are perpendicular type crossings that can be mitigated by encasement or lowering of the main. However, along the proposed east and west bank underpass at Speedway Boulevard, there is a potential parallel alignment conflict for a distance of approximately 550 feet. This conflict may require the horizontal relocation of the 24" reclaimed water main. Additionally, these underpasses are in conflict with an existing 24" potable water main and 36" sanitary sewer. These utilities run parallel to each other and are supported on concrete piers that span the width of the wash just north of the bridge. Both utilities are located within welded steel casings that are visible at the current channel flowline.

Psomas has met with Tucson Water representatives as part of an early coordination effort. They indicated that the existing water mains should be lowered if they are within the calculated scour of the wash. If they are below the scour depth, they may be left in their current alignment but will require encasement within a steel pipe. Without encasement, the mains will have to be lowered to a minimum of three feet below the lowest elevation that will be disturbed as part of construction. The concept of utilizing a split steel casing was proposed by Psomas and would allow for the existing mains to remain in place during construction, although they would need to be taken out of service during placement of the casing. Further discussions are required with Tucson Water to decide upon the appropriate action.

Tucson Water indicated that the allowable window for modification of the reclaimed lines would between December 1st and March 1st with the out-of-service time not exceeding 7 to 10 days.

The presence of large power poles just inside the east bank of the wash represents a significant project design constraint. The poles are owned by Tucson Electric Power (TEP) and are in potential conflict with the project from the northern termination of the Mullins Landfill soil cement to just north of Tanque Verde Road (see Figure 7). Four poles are directly in line with what could be considered an optimal alignment for the future bank protection. Previous similar projects have shown that these poles become a significant design constraint and often require special consideration during design and construction. Psomas has obtained record information on the existing poles to assess their design and how they would best be incorporated into the project. The poles sit on large concrete bases which are supported by driven friction piles. It appears that there is only minimal depth to the concrete bases and that placement of the new soil cement behind the poles and the associated excavation of the channel to provide a constant cross-sectional geometry would likely expose, or nearly expose, the driven piles below the concrete bases. This situation would be unacceptable to TEP, and at a minimum, the concrete bases would have to be extended. Additionally, the deepest part of the excavation to construct the soil cement would be very close to the poles requiring some form of shoring. An alignment in front of (or west of) the poles would maintain the existing cover at the bases and protect them from further scour. However, special consideration during construction will be required as well as close coordination with TEP.

Psomas has met with TEP representatives and upon their request during that meeting has provided information to them with a figure showing the preferred soil cement alignment in relation to their existing power poles. This figure along with a response letter providing comments on the figure have been provided in Appendix I.

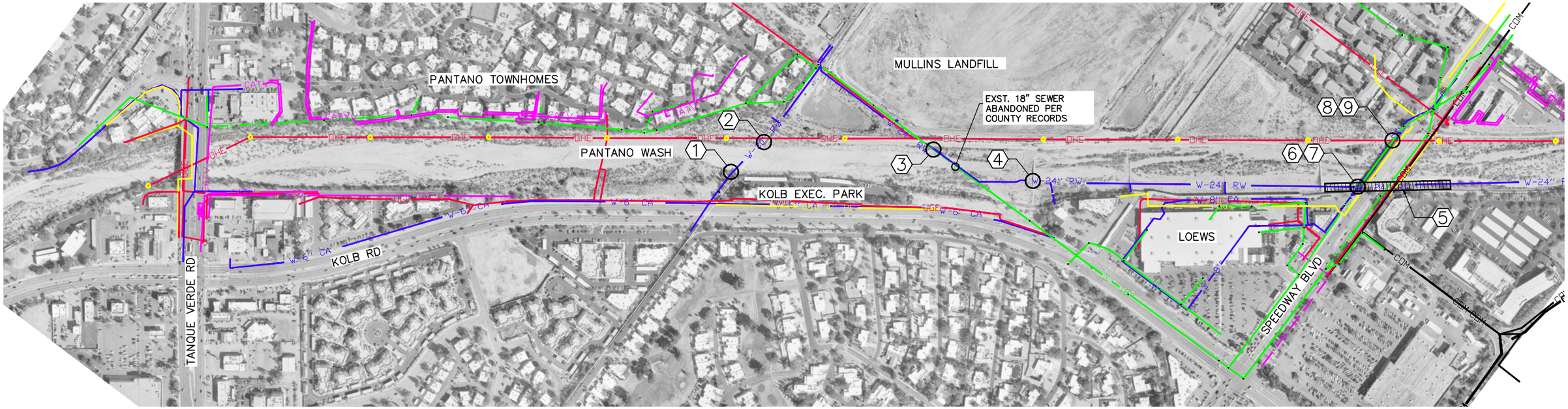

TUCSON WATER
PIMA COUNTY SEWER
COX COMMUNICATIONS
TUCSON ELECTRIC POWER
SOUTHWEST GAS

SUMMARY OF UTILITY CONFLICTS

Potential Conflict ID	Utility Type	Owner	Location of Conflict	Invert Elevation of Utility	Crown Elevation of Utility	Estimated Elevation of Toe of New Soil Cement	Estimated Separation	Likely Conflict Resolution Scenario
1	30" Reclaimed Water	Tucson Water	New Bank Protection Toe-Down	2493.16	2495.66	2493.79	-1.87	Encase utility, construct around
2	30" Reclaimed Water	Tucson Water	New Bank Protection Toe-Down	2493.16	2495.66	2494.43	-1.23	Encase utility, construct around
3	24" Reclaimed Water	Tucson Water	Existing Bank Protection Additional Toe-Down	2499.39	2501.39	2498.71	-2.68	Encase utility, construct around
4	24" Reclaimed Water	Tucson Water	Existing Drop Structure Additional Toe-Down	2494.16	2496.16	2495.20	-0.96	Encase utility, construct around
5	24" Reclaimed Water	Tucson Water	New Speedway Underpass Toe-Down	Varies	Varies	Varies	Varies	Horizontal Waterline Shift
6	24" Potable Water	Tucson Water	New Speedway Underpass Toe-Down	2526.80	2528.80	2526.35	-2.45	Construct around utility which is already encased within steel pipe
7	36" Sanitary Sewer	Pima County	New Speedway Underpass Toe-Down	2526.80	2529.80	2526.35	-3.45	Construct around utility which is already encased within steel pipe
8	24" Potable Water	Tucson Water	New Speedway Underpass Toe-Down	2524.67	2526.67	2525.95	-0.72	Construct around utility which is already encased within steel pipe
9	36" Sanitary Sewer	Pima County	New Speedway Underpass Toe-Down	2524.67	2527.67	2525.95	-1.72	Construct around utility which is already encased within steel pipe

0 250 500 750

PSOMAS
800 E. Wetmore Road, Suite 110
Tucson, AZ 85719
(520) 292-2300 (520) 292-1290 fax
www.psomas.com

FIGURE 7
UTILITY CONFLICT MAP
BANK PROTECTION IMPROVEMENTS
TANQUE VERDE BRIDGE TO SPEEDWAY BRIDGE
FOR
PANTANO WASH

PROJ NO: 07125-01
DATE: 04/2008

Engineering • Planning • Environmental • Surveying • Water Resources

5.3 ENVIRONMENTAL PERMITTING AND MITIGATION

WestLand Resources is completing the documents to support the application to the Army Corps of Engineers (the Corps) for the Individual Permit under Section 404 of the Clean Water Act. WestLand is currently coordinating with Psomas and the County to identify alternatives to the bank stabilization and grade control structure design for evaluation in the 404(b)(1) Alternatives Analysis. This analysis must document the logistical, technical, and economic practicability of a range of alternatives that meet the project's purpose and need. Once this document has been submitted to the Corps for review and the permitted action has been approved, WestLand will submit the 404 permit application and the Draft Public Notice to the Corps. The Corps will then publish the Public Notice to initiate the required 30-day comment period. Figure 8 details the proposed jurisdictional limits of the Pantano Wash under Section 404 as delineated by WestLand. The proposed limits have been submitted to the Corps and have been accepted under the terms of RGL 0802 which allow projects to move forward with and application for an individual permit without formal official approval from the Corps. As a condition of FGL 0802 the jurisdictional limits are not subject to appeal by the applicant. The application for an individual 401 water quality certification will be prepared and submitted to the Arizona Department of Environmental Quality for a 30-day review period concurrent with the public comment period.

The Biological Evaluation and Class III Cultural Resources Survey Report will be submitted to the Corps for review together with the 404 permit application. The Corps will review the Biological Evaluation and the Class III Cultural Resources survey report to determine if additional coordination with the US Fish and Wildlife Service and the State Historic Preservation Office is required. If so, the Corps will submit those documents to the appropriate agencies for review and comment.

Once agency coordination is complete and the comment period has ended, WestLand will work with the County to respond to any public comments submitted to the Corps. The responses will be incorporated into the Environmental Assessment drafted for the Corps.

Permanent loss of wash area (as defined by the Corps) will occur as part of this project where bank protection or permanent grade control structures encroach into the jurisdictional limits of the wash. Based on current similar projects, it is anticipated that the Corps will require mitigation to be completed in a 3:1 ratio to the area of permanent loss. The County may opt to pay an in-lieu fee as opposed to performing actual mitigation that would likely have to occur offsite. The estimated fee is

$15,000 per acre based on similar recent projects. However, this fee is up to the discretion of the Corps and is project specific.

As discussed in detail in subsequent sections, the alignment alternatives for the project are limited by numerous existing physical constraints. On the west bank, encroachment into the proposed jurisdictional limits is unavoidable due to the presence of existing development abutting the wash. Where the west bank is undeveloped, the alignment will be designed outside of the jurisdictional limits wherever possible. The maximum estimated area of permanent loss along the west bank, including the underpass at Speedway Boulevard, is 0.74 acres. Along the east bank, the extent of permanent loss will depend on whether or not the alignment is in front or in back of the existing TEP power poles. An alignment behind the TEP poles would be completely outside of the proposed jurisdictional limits and would result in no additional permanent loss as the Mullins Landfill toe-down extension and eastern Speedway Boulevard underpass do not encroach into the proposed jurisdictional limits. An alignment in front of the poles would result in additional permanent loss of approximately 0.13 acres. The proposed grade control structure adds an additional 0.050 acres for an overall project loss of 0.93 acres. These estimates for permanent loss are subject to change depending on modifications made to the jurisdictional limits by the Corps during the review process.

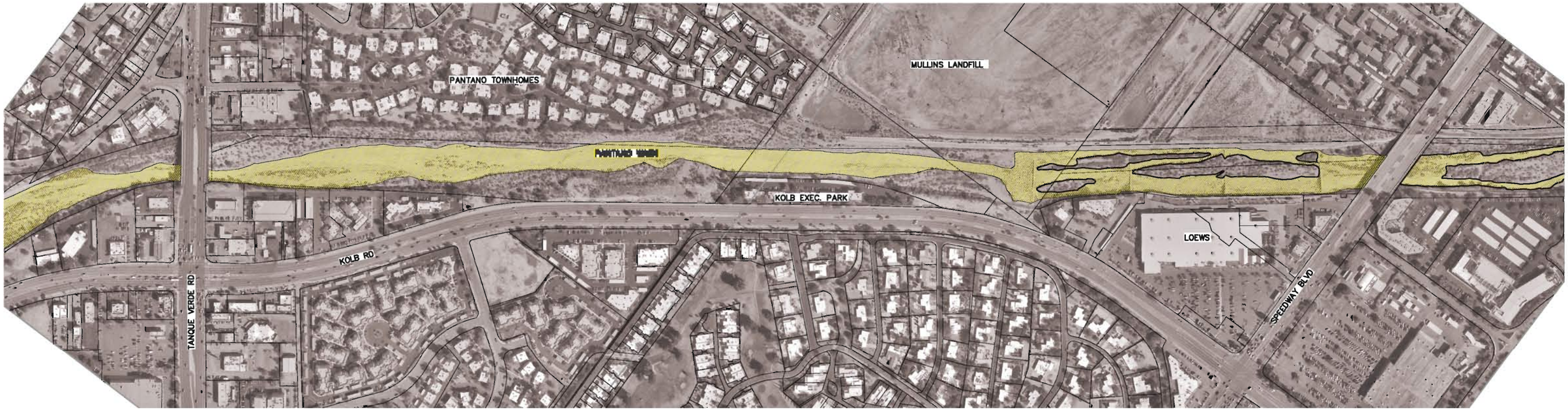

PROPOSED SECTION 404 JURISDICTIONAL LIMITS

0 250 500 750

PSOMAS
800 E. Wetmore Road, Suite 110
Tucson, AZ 85719
(520) 292-2300 (520) 292-1290 fax
www.psomas.com

FIGURE 8
PROPOSED JURISDICTIONAL LIMITS
BANK PROTECTION IMPROVEMENTS
TANQUE VERDE BRIDGE TO SPEEDWAY BRIDGE
FOR
PANTANO WASH

PROJ NO: 07125-01
DATE: 05/2008

5.4 PROJECT PHASING

Bank stabilization improvements within the project reach will likely occur in phases based upon funding constraints and the perceived risk of failure at each of the existing bank protection segments during a major event. An overall project phasing map has been provided as Figure 9 and shows the three distinct phases that were anticipated at the time of this report. Phase I primarily covers work to permanently stabilize those areas damaged during the 2006 monsoon flooding. Phase II extends the Phase I improvements north to approximately 770' downstream of Tanque Verde Road. Phase III consists primarily of the construction of pedestrian underpasses at Speedway Boulevard and a short reach of soil cement north of Loews to provide continuity of the maintenance path. Additional Phase III improvements may include a resurfacing of the existing soil cement adjacent to Loews. Phase III improvements will not be discussed in detail in this submittal but have been reflected where appropriate in the 30% Concept Plans (see Section 6.0).

5.4.1 Phase I Improvements

Phase I improvements will include permanent stabilization at the four temporary mitigation projects discussed in Section 2.2, as well as construction of a new grade control structure just downstream of Kolb Executive Park. Funding for the Phase I improvements will primarily come from FEMA as part of the emergency declaration associated with the 2006 monsoon flooding. The three projects (or damaged areas) which were eligible for this funding are described below. FEMA will not normally provide funding for the construction, repair or modification of grade control structures. Therefore, any repairs to the existing Mullins Landfill grade control structure, or the construction of a new structure will require an alternative source of funding. The FEMA funded projects will be extended to logical points of termination to tie-into existing soil cement, or to match the extent of improvements on the opposite bank consistent with Pima County requirements. Matching the extents of improvements on both banks limits the potential impacts of "reflective" scour that can occur when improvements are constructed on only one bank. Figures 9 & 10 show the extent of Phase I improvements, including the location and extent of each FEMA funded project. The individual FEMA projects included as part of the Phase I improvements are described as follows:

FEMA Project #311 – Kolb Executive Plaza

This will replace the temporary mitigation measures along Kolb Executive Park, which was the most heavily damaged reach in the project area during the 2006 flow event. The new bank protection will replace the function of the existing gabions that exist along the entire extent of the Kolb Executive Park property and to the southwest to match existing soil cement located adjacent to the downstream most Mullins Landfill grade control structure. The new soil cement will be placed in front of the existing gabions to minimize the issue of bank stability during construction. Although not part of the FEMA project, the Phase I soil cement will be extended north to match the extents of the improvements associated with the Pantano Townhomes mitigation project as discussed below, and to the south to replace the gabions adjacent to the Sunrise Plaza gabions. The improvements will tie into the existing cantilever path north of Loews.

FEMA Project #318 – Mullins Landfill

This project will replace the temporary mitigation measures along the existing Mullins Landfill soil cement with the construction of an extension to the existing toe-down from the Mullins Landfill grade control structure to the north end of the existing soil cement. Migration of the channel thalweg undercut a potion of the existing soil cement and threatens the remainder of the reach during subsequent events.

FEMA Project #320 – Pantano Townhomes

This project replaces the temporary mitigation measures placed adjacent to the Pantano Townhomes development due to the undercutting and failure of a portion of the existing rock-and-rail bank protection. The improvements will be constructed in front of the existing rock-and-rail bank protection and will be extended south to the tie into the existing Mullins Landfill soil cement.

5.4.2 Phase II Improvements

The Phase II improvements extend the Phase I improvements northward on both banks of the Pantano Wash to a point of termination approximately 770 ft. north of Tanque Verde Road. Figure 11 shows the location and extent of the proposed Phase II improvements.

East Bank Improvements

Improvements on the east bank can be separated into three distinct reaches for the purpose of description. The first reach will extend north from the Phase I improvements along the Pantano Townhomes to the Tanque Verde Bridge. The existing rock-and-rail in this reach has not yet experienced significant damage, but has insufficient toe down and could be subject to undercutting and failure as seen in other reaches where lateral migration of the channel thalweg has occurred. The second reach will extend the improvements under the Tanque Verde Bridge via a pedestrian underpass, which will be designed to provide at least 10 feet of clearance from the bridge low-chord, and will be elevated above the 10- year WSEL. The final reach will extend from the Tanque Verde Bridge to the existing soil cement constructed as part of the Tanque Verde Country Club development. The rock-and-rail in this reach has not yet sustained significant damage, but also has insufficient toe-down and could be subject to undercutting and failure.

West Bank Improvements

The Phase II improvements on the west bank can be described as four distinct reaches. The first reach will extend north from the Phase I improvements to completely protect the currently unprotected reach between Kolb Executive Park and Kolb Plaza. The existing earthen banks appear to be relatively stable under current conditions and did not appear to experience significant erosion and migration during the 2006 flow event. However, a shift in the channel thalweg could cause bank undercutting and failure, resulting in lateral migration towards the Kolb Road right-of-way. The second reach will extend along the Kolb Plaza commercial development to Tanque Verde Road. The existing rock-and-rail bank protection in this reach was not significantly damaged during the 2006 storm event. However, the results of the geotechnical investigation indicate insufficient toe-down for the 100-year flow event. The improvements will continue under the Tanque Verde Bridge via a pedestrian underpass that will be designed to provide at least 10' of clearance from the bridge low-chord, and will be elevated above the 10-year WSEL. The final reach will extend the improvements north to a point of termination directly across from the east bank improvements and will also replace a segment of potentially inadequate rock-and-rail.

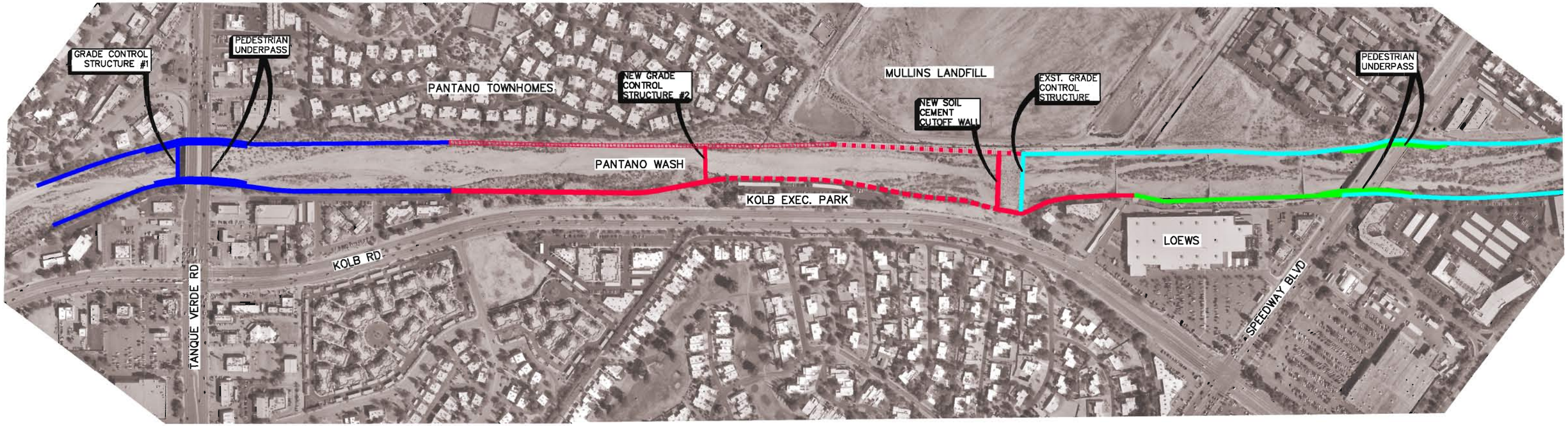

PROJECT PHASING LEGEND

- *PHASE 1*
- *PHASE 2*
- *PHASE 3*
- *NO IMPROVEMENTS PROPOSED*

FEMA FUNDED PHASE I PROJECTS

- *KOLB EXECUTIVE PARK (FEMA PROJECT #311)*
- *MULLINS LANDFILL (FEMA PROJECT #318)*
- *PANTANO TOWNHOMES (PROJECT #320)*

PSOMAS
800 E. Wetmore Road, Suite 110
Tucson, AZ 85719
(520) 292-2300 (520) 292-1290 fax
www.psomas.com

FIGURE 9
PROJECT CONSTRUCTION PHASING
BANK PROTECTION IMPROVEMENTS
TANQUE VERDE BRIDGE TO SPEEDWAY BRIDGE
FOR
PANTANO WASH

PROJ NO: 07125-01
DATE: 05/2008

T:\07125\01\WATRES\DLBASE\EXHIB\Report Figures\Project Phasing (Figure 9).dwg Sheet 1 Mike Doty Mon, 05 Jan 2009, 3:11pm Last Saved By: Mcoty

5.5 BANK STABILIZATION ALTERNATIVES

In considering the available material alternatives for bank protection, it was determined that soil cement was the logical choice from an engineering as well as community function perspective. It provides long-term durability, low maintenance, and is consistent with existing upstream and downstream bank protection. It is also the only practical option to provide for the incorporation of pedestrian paths and maintenance access given the tight constraints within much of the project limits. The requirement to provide a maintenance and pedestrian access on both banks as part of the improvements was assumed to be a key element of project planning and design. This approach is consistent with current Pima County and City of Tucson master planning documents relating to future linear park facilities within the project limits.

With the material selected, the stabilization alternative analysis then focuses on how the project will be constructed. Typical sections detailing soil cement bank protection in each of the distinct project reaches are shown on Figures 10 and 11, with multiple options provided where appropriate. Standard practice for the construction of soil cement bank protection is proposed and includes an 8 foot wide structure placed in 8" compacted lifts with a 1:1 sloped face. The exception is that a 10 foot wide section is proposed for the top three lifts to provide a top width that is more appropriate for a maintenance and pedestrian access. The most significant element presented in the typical sections is that the new soil cement is to be constructed in front of the existing bank protection where it exists. The project geotechnical investigation indicates that removal of the existing gabion or rock-and-rail bank protection would create a potentially unstable bank that may require expensive temporary stabilization measures during construction. This condition exists along a short reach (200'±) adjacent to Kolb Executive Park where complete failure of the gabions occurred. This section may require special consideration during construction including laying back of the existing nearly vertical slope into the existing parking area. Another significant element is that an option for 10-year flow depth soil cement was considered in areas where competent bank protection already exists. This option is discussed in more detain in Section 5.6.

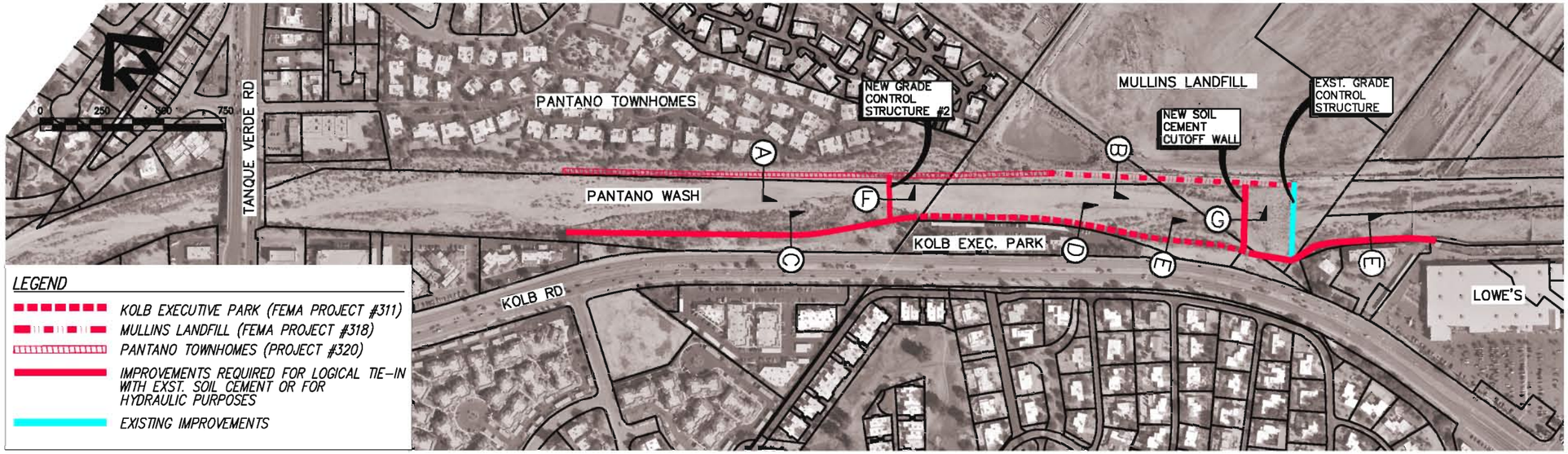

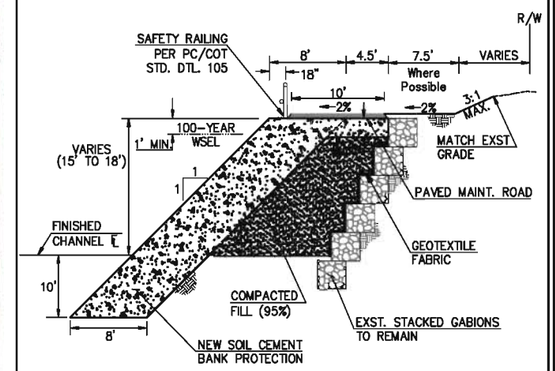

E TYPICAL SOIL CEMENT SECTION

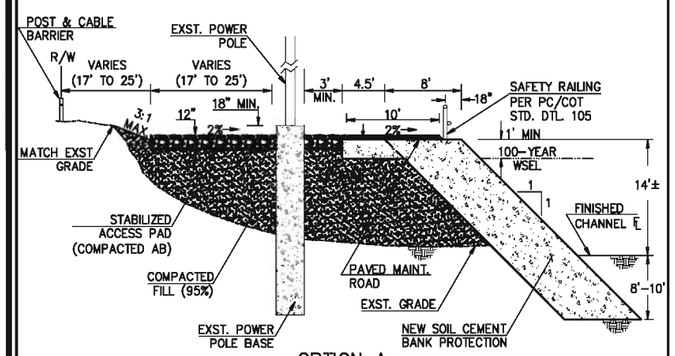

OPTION A

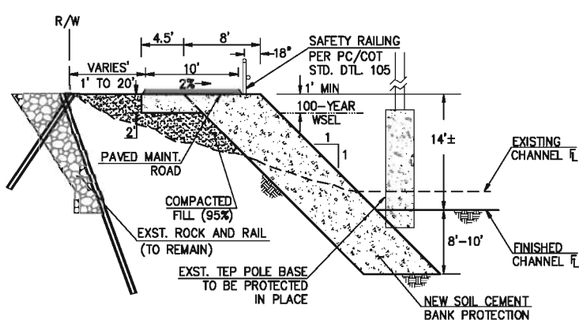

OPTION B

A TYPICAL SOIL CEMENT SECTION

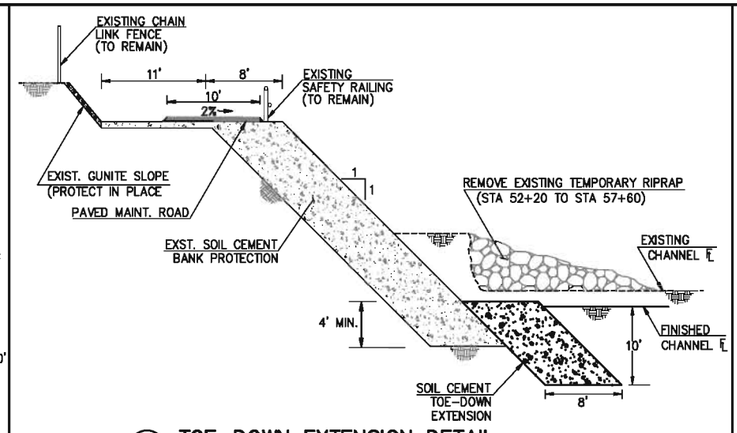

B TOE-DOWN EXTENSION DETAIL

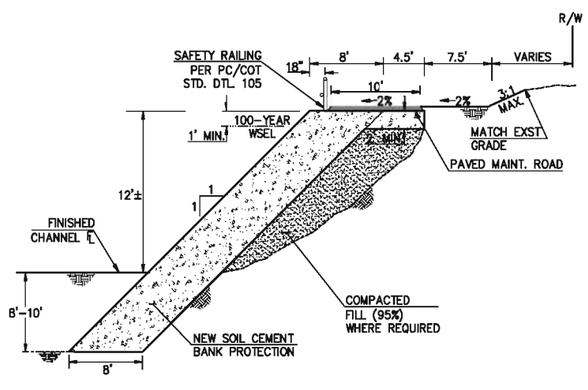

C TYPICAL SOIL CEMENT SECTION

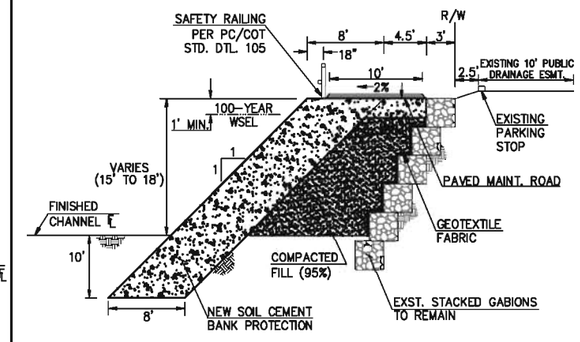

OPTION A

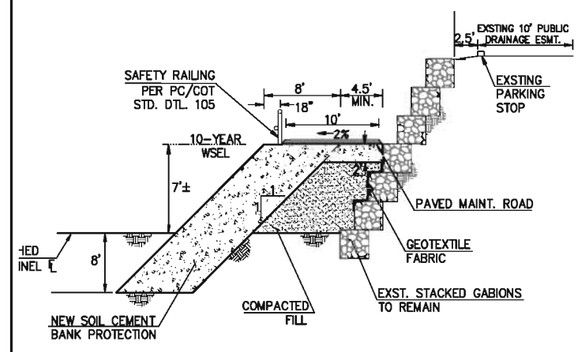

OPTION B

D TYPICAL SOIL CEMENT SECTION

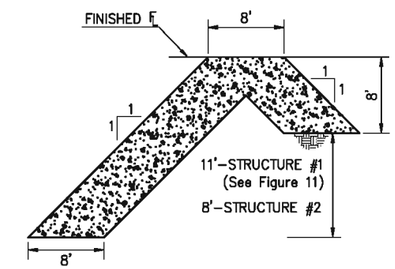

F GRADE CONTROL DETAIL

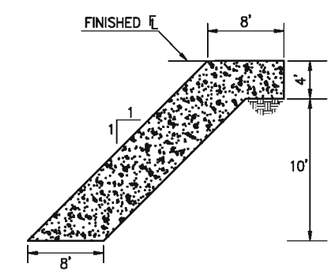

G SOIL CEMENT CUTOFF WALL DETAIL

PSOMAS
800 E. Wetmore Road, Suite 110
Tucson, AZ 85719
(520) 292-2300 (520) 292-1290 fax
www.psomas.com

FIGURE 10
PHASE I IMPROVEMENTS
BANK PROTECTION IMPROVEMENTS
TANQUE VERDE BRIDGE TO SPEEDWAY BRIDGE
FOR
PANTANO WASH

PROJ NO: 07125-01
DATE: 05/2008

T:\07125\01\MATRES\QLEBASE\EXHIB\Report Figures\Phase I Alternatives (Figure 10).dwg Sheet 1 Mike Daily Mon, 05 Jan 2009, 3:08am Last Saved By: Mdaily

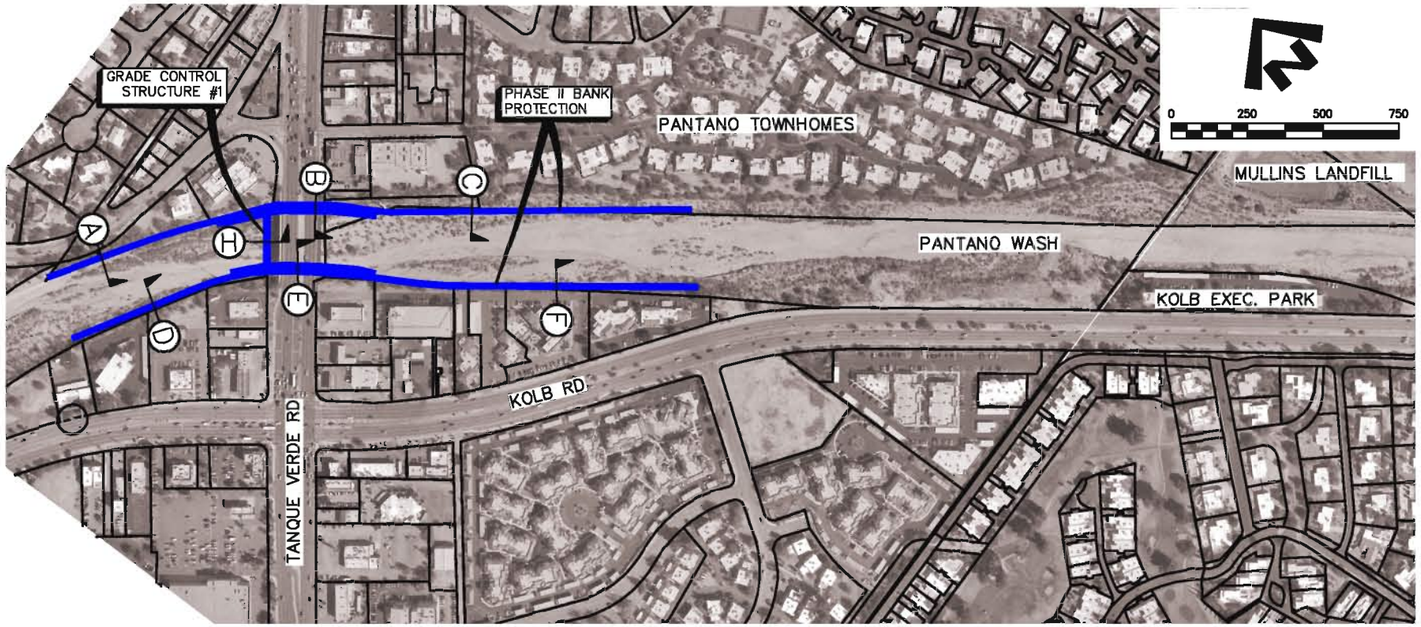

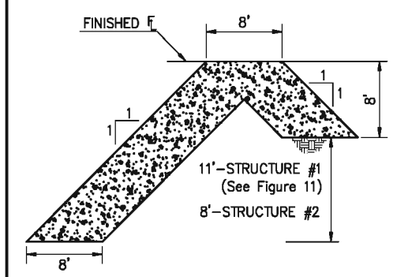

H GRADE CONTROL DETAIL

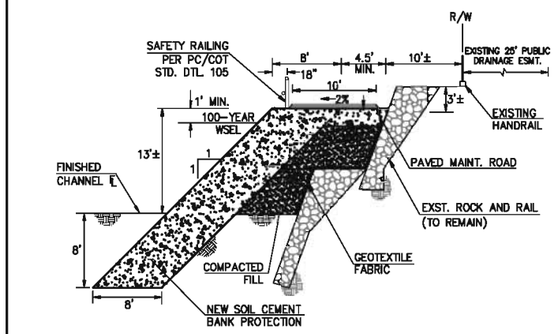

OPTION A

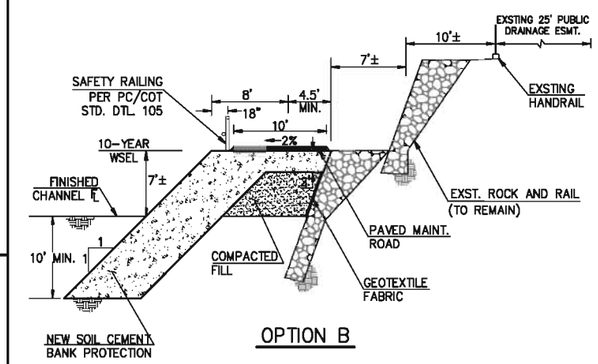

OPTION B

F SOIL CEMENT TYPICAL DETAIL

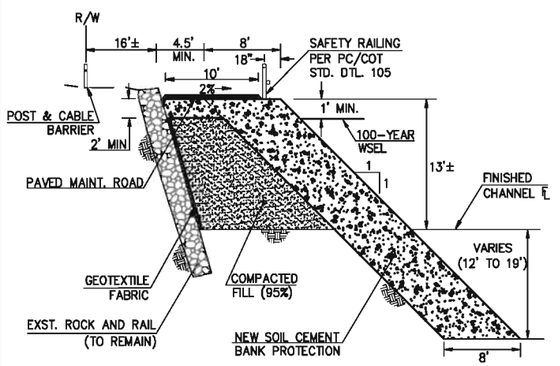

A SOIL CEMENT TYPICAL DETAIL

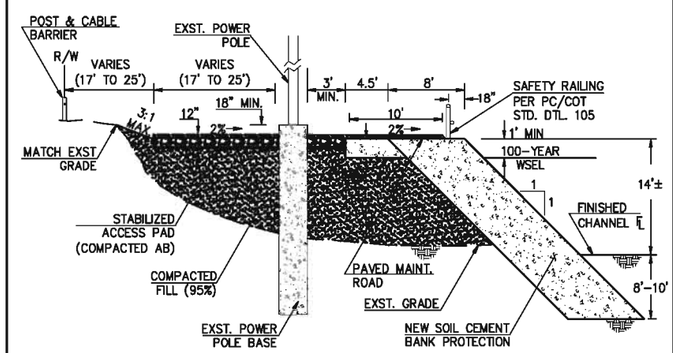

OPTION A

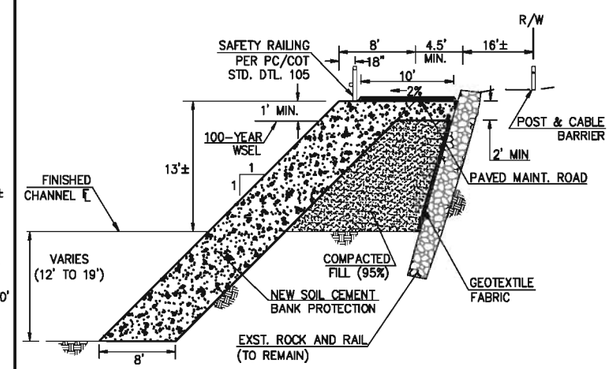

D SOIL CEMENT TYPICAL DETAIL

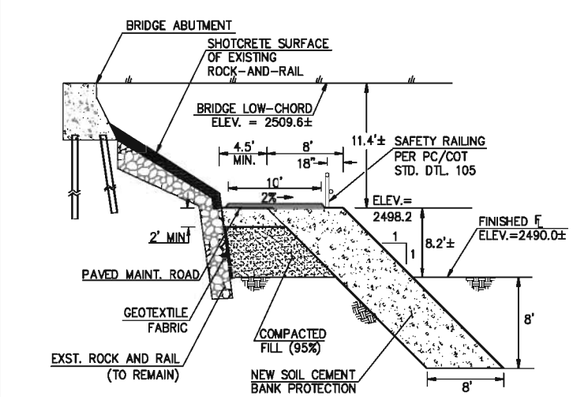

B SOIL CEMENT TYPICAL DETAIL

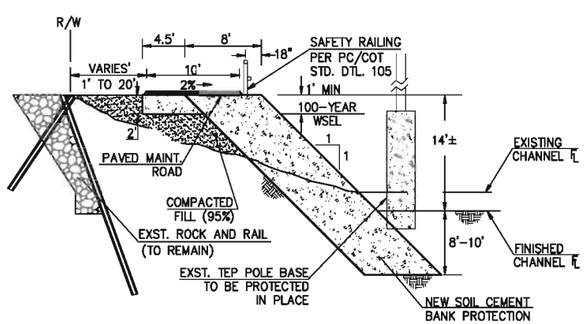

OPTION B

C SOIL CEMENT TYPICAL DETAIL

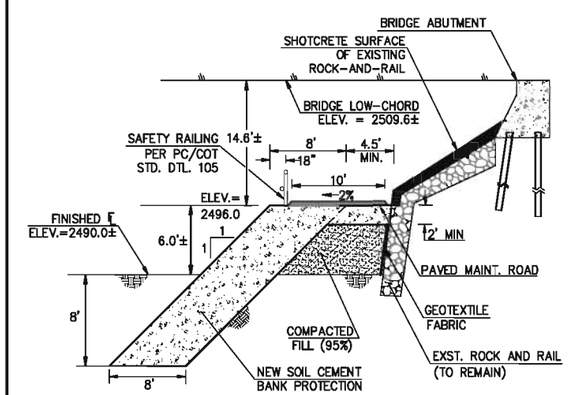

E SOIL CEMENT TYPICAL DETAIL

PSOMAS

800 E. Wetmore Road, Suite 110
Tucson, AZ 85719
(520) 292-2300 (520) 292-1290 fax
www.psomas.com

FIGURE 11
PHASE II IMPROVEMENTS
BANK PROTECTION IMPROVEMENTS
TANQUE VERDE BRIDGE TO SPEEDWAY BRIDGE
FOR
PANTANO WASH

PROJ NO: 07125-01
DATE: 05/2008

5.6 CHANNEL ALIGNMENT AND ENCROACHMENT

5.6.1 BANK PROTECTION ALIGNMENT ALTERNATIVES

The alignment of future bank protection is primarily controlled by existing development on both banks, leaving little flexibility for the development of alignment alternatives. An additional constraint is the presence of large Unisource Energy Corporation (TEP) power poles just inside the east bank adjacent to the Pantano Townhomes. Consideration was also given to minimizing encroachment into the proposed jurisdictional limits of the wash. Four general alignment alternatives were developed which balance existing constraints along the banks with the need to minimize the level of encroachment into the existing channel. On the west bank only one possible horizontal alignment option was evaluated given the existing constraints. However, consideration was given to utilizing a soil cement section with less than a 100-year capacity where existing bank protection could be utilized above the proposed soil cement profile. The evaluation of using 10-year soil cement along sections of the project is based strictly on cost potential savings as it appears to provide no additional benefits. Alignments on the east bank were established both in front and behind the existing TEP power poles. The proposed alignment options are presented on Figure 12 through Figure 15 and discussed in detail below.

Alternative 1: On the west bank, a combination of 100-year and 10-year soil cement would be utilized. The 100-year bank protection would be utilized along the currently undeveloped reaches where no bank protection exists, along Sunrise Plaza (located just north of Loews), and for the reach north of Tanque Verde Road (Figure 12). The 10-year bank protection would be utilized adjacent to Kolb Executive Park and Kolb Plaza where there are existing gabions or rock-and-rail bank protection.

The 10-year soil cement would be placed adjacent to the existing bank protection, which would be left in place and would protect the bank for flows above the 10-year depth. The damaged gabions along Kolb Executive Park would be replaced but would be constructed with a toe-down of 3' behind the new soil cement. Per the project geotechnical report, approximately 250' along Kolb Executive Park would likely require some form of temporary soil stabilization during construction. At this location, complete failure of the gabions has resulted in a near vertical exposed earthen bank that is currently covered with dumped riprap.

Along the east bank, 100-year soil cement would be placed along an alignment that is parallel to and immediately in front of the existing power poles. This alignment has two major benefits not realized by an alignment behind the poles. First, construction will be less problematic in front of the poles as the deepest part of the excavation will be furthest away from the pole foundations. Additionally, the poles will be out of the main channel and no longer exposed to potential scour. Early coordination with TEP representatives indicated this was the preferred approach. Coordination with TEP during both formal design and construction would still be required, and special design and construction considerations may still be significant. The second advantage is that no property takes or easements are required from the Pantano Townhomes common area. Although obtaining a portion of their common area will still be pursued, it is not a critical path item that can potentially delay project construction. A conceptual layout of Alternative 1 is provided on Figure 12. Typical sections are provided on Figures 10 and 11. As shown on those figures, a large amount of fill would be required to match existing grade and prevent the occurrence of low-lying areas behind the soil cement which will tend to collect runoff and debris. It is anticipated that all of the required fill will be generated as part of excavation in the channel to create a uniform cross-section.

Alternative 2: This alternative includes full 100-year soil cement bank protection on both banks. On the west bank, the back of the top of the soil cement would be placed in front of the existing gabions at Kolb Executive Park and Sunrise Plaza, and at the front of the rock-and-rail at Kolb Plaza (see Typical Sections on Figures 10 and 11). Removal of the existing bank protection at these locations does not significantly decrease the amount of channel encroachment resulting from construction of the new soil cement, but may significantly increase project construction costs by requiring temporary stabilization of the exposed bank during construction. On the east bank, soil cement would be placed immediately west of the existing power poles as with Alternative 1, providing the same potential benefits to constructability. A conceptual layout of Alternative 2 is provided on Figure 13.

SEE BELOW LEFT

SEE ABOVE RIGHT

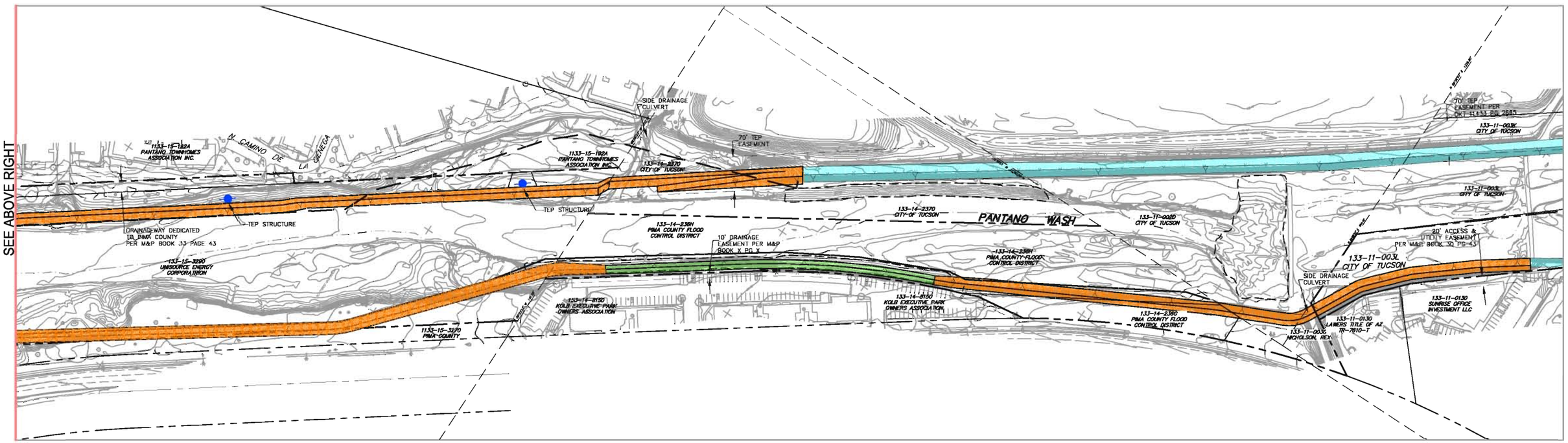

100-YR SOIL CEMENT BANK PROTECTION

10-YR SOIL CEMENT BANK PROTECTION

EXST. SOIL CEMENT BANK PROTECTION (TO REMAIN)

TUCSON ELECTRIC POWER STRUCTURE

0 100 200 300

PSOMAS
800 E. Wetmore Road, Suite 110
Tucson, AZ 85719
(520) 292-2300 (520) 292-1290 fax
www.psomas.com

FIGURE 12
ALIGNMENT ALTERNATIVE 1
BANK PROTECTION IMPROVEMENTS
TANQUE VERDE BRIDGE TO SPEEDWAY BRIDGE
FOR
PANTANO WASH

PROJ NO: 07125-01
DATE: 05/2008

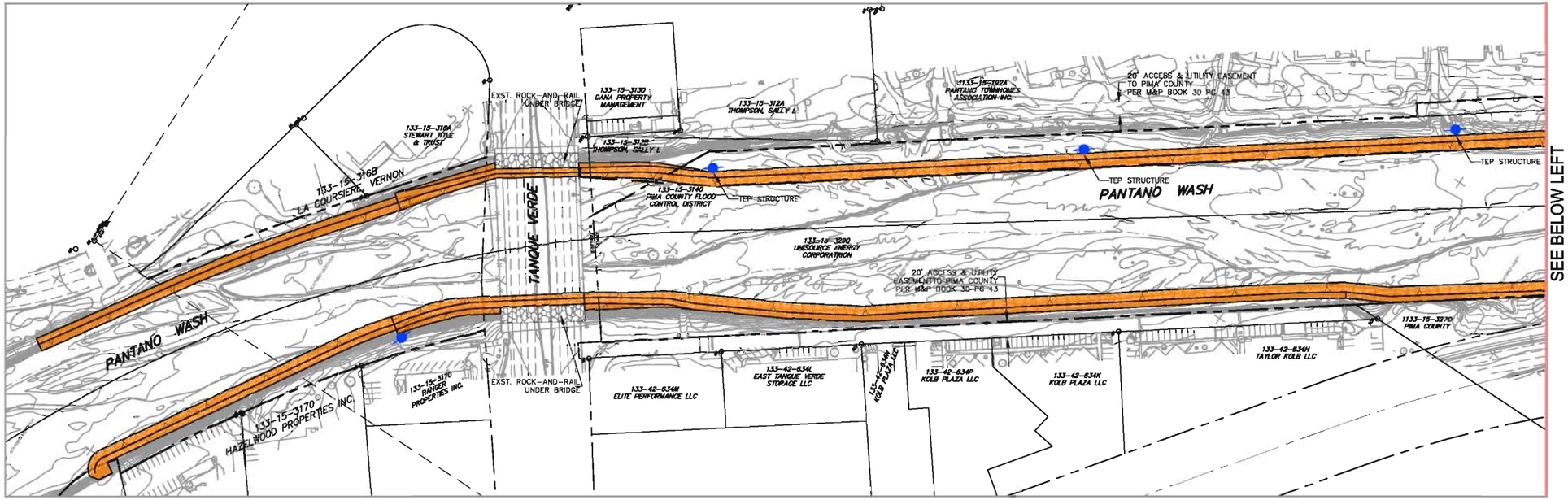

SEE BELOW LEFT

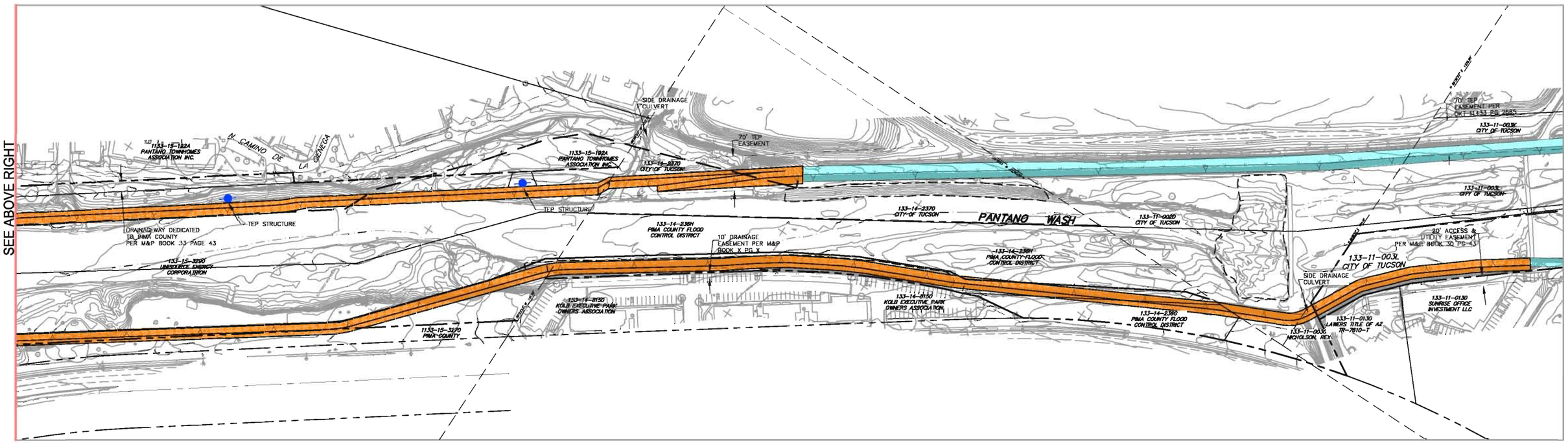

SEE ABOVE RIGHT

100-YR SOIL CEMENT BANK PROTECTION

EXST. SOIL CEMENT BANK PROTECTION (TO REMAIN)

TUCSON ELECTRIC POWER STRUCTURE

0 100 200 300

PSOMAS
800 E. Wetmore Road, Suite 110
Tucson, AZ 85719
(520) 292-2300 (520) 292-1290 fax
www.psomas.com

FIGURE 13
ALIGNMENT ALTERNATIVE 2
BANK PROTECTION IMPROVEMENTS
TANQUE VERDE BRIDGE TO SPEEDWAY BRIDGE
FOR
PANTANO WASH

PROJ NO: 07125-01
DATE: 05/2008

Alternative 3: This alternative is identical to Alternative 1 on the west bank with the combined 100-year and 10-year soil cement profiles. On the east bank, the alignment would extend between the existing power poles and the Pantano Townhomes property line. A conceptual layout of Alternative 3 is provided on Figure 14. Typical sections are provided on Figures 10 and 11.

The primary benefits of this alignment are reduced encroachment into the channel and Section 404 jurisdictional limits, as well as a significant reduction in the amount of compacted backfill. The potential disadvantage of the alignment is the limited space created by being between the TEP power poles and the Pantano Townhomes property line. The proximity to the Pantano Townhomes development may make it difficult to get consensus from property owners and the homeowners association (HOA) regarding property takes and easements required for construction and long term maintenance. Given the construction timeline for Phase I, negotiations with the HOA would likely become a critical path item with high potential for delaying the project.

Construction behind the existing TEP power poles will result in significant challenges during both design and construction due to the depth of excavation around the pole bases. Close coordination with TEP would be required to formulate a construction scheme that meets both the project design intent and satisfies the concerns of TEP with regard to the protection of their facilities. Early coordination with TEP representatives has indicated a generally negative opinion regarding construction behind the poles.

Alternative 4: This concept is identical to Alternative 2 on the west bank with full 100-year soil cement along the entire reach. It is identical to Alternative 3 on the east bank with the soil cement along an alignment between the existing power poles and the Pantano Townhomes property line. A conceptual layout of Alternative 4 is provided on Figure 15. Typical sections are provided on Figures 10 and 11.

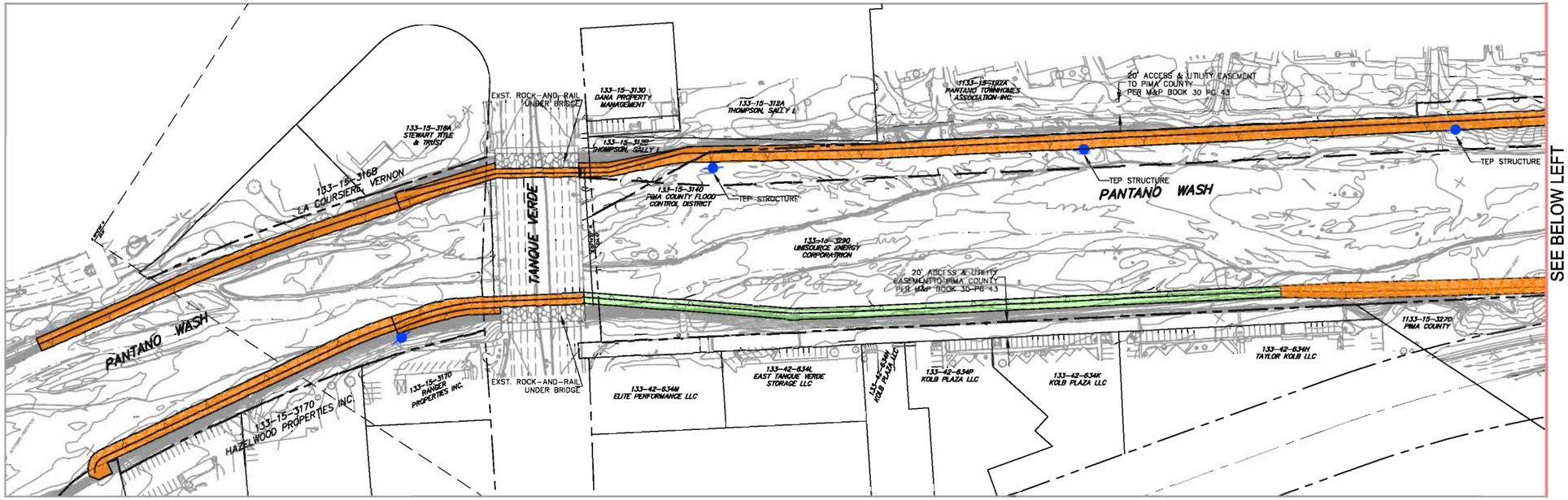

SEE BELOW LEFT

SEE ABOVE RIGHT

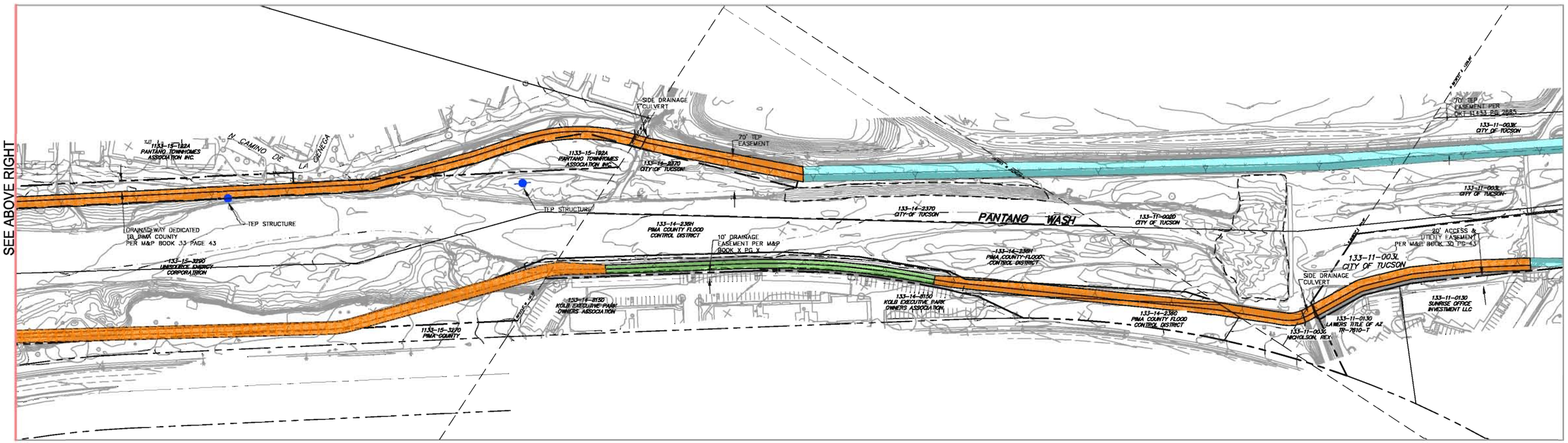

100-YR SOIL CEMENT BANK PROTECTION

10-YR SOIL CEMENT BANK PROTECTION

EXST. SOIL CEMENT BANK PROTECTION (TO REMAIN)

TUCSON ELECTRIC POWER STRUCTURE

0 100 200 300

PSOMAS
800 E. Wetmore Road, Suite 110
Tucson, AZ 85719
(520) 292-2300 (520) 292-1290 fax
www.psomas.com

FIGURE 14
ALIGNMENT ALTERNATIVE 3
BANK PROTECTION IMPROVEMENTS
TANQUE VERDE BRIDGE TO SPEEDWAY BRIDGE
FOR
PANTANO WASH

PROJ NO: 07125-01
DATE: 05/2008

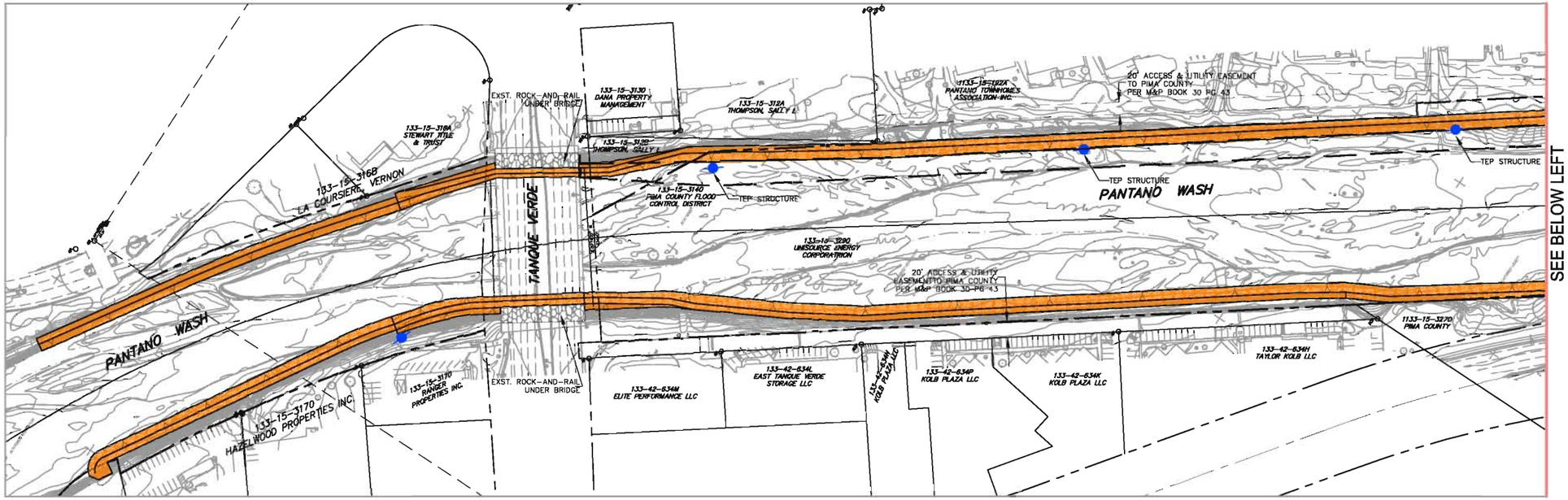

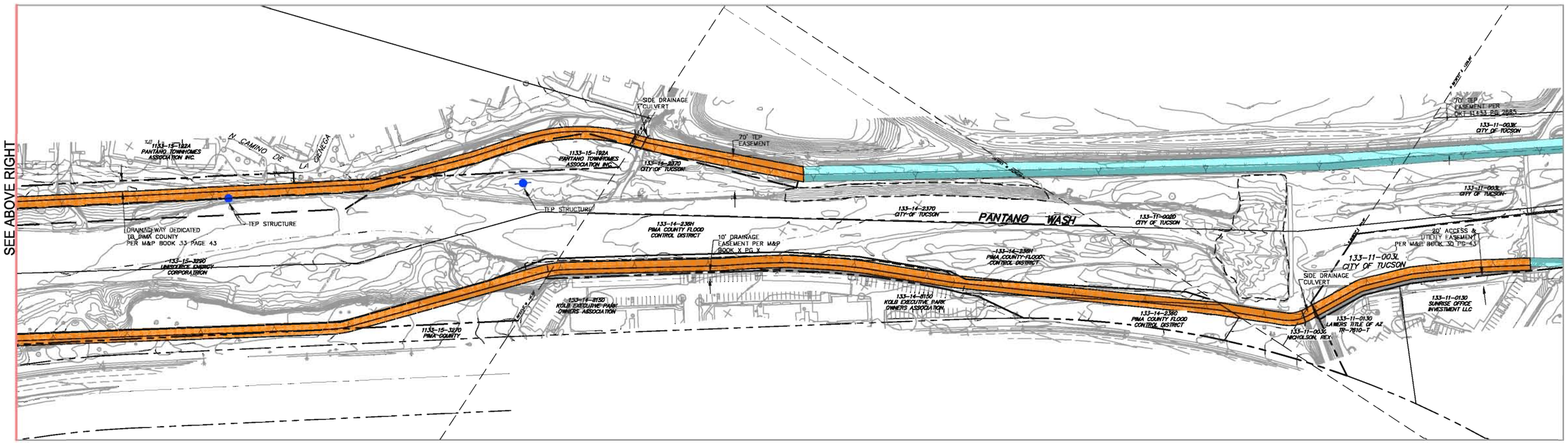

100-YR SOIL CEMENT BANK PROTECTION

EXST. SOIL CEMENT BANK PROTECTION (TO REMAIN)

TUCSON ELECTRIC POWER STRUCTURE

0 100 200 300

PSOMAS
800 E. Wetmore Road, Suite 110
Tucson, AZ 85719
(520) 292-2300 (520) 292-1290 fax
www.psomas.com

FIGURE 15
ALIGNMENT ALTERNATIVE 4
BANK PROTECTION IMPROVEMENTS
TANQUE VERDE BRIDGE TO SPEEDWAY BRIDGE
FOR
PANTANO WASH

PROJ NO: 07125-01
DATE: 04/2008

As discussed, it is assumed that construction for all alignment alternatives will take place in front of the existing bank protection. Filter fabric should be placed between the exiting bank protection and compacted fill behind the soil cement to prevent the migration of fines into the highly porous material. Consideration should also be given to "sealing" the top of the existing gabions and rock-and-rail at locations where significant drainage could flow into them as the future improvements will no longer be a free draining system. The gabions and rock-and-rail throughout the project are constructed with a 1:2 slope or steeper. This situation allows the soil cement bank protection (constructed at a 1:1 slope) to be extended to a point adjacent to the top of gabions or rock-and-rail without conflict (see Typical Sections on Figures 10 and 11). From a constructability perspective, however, when the soil backfill prism narrows to less width than conventional mobile compaction equipment, the soil cement bank material will likely be extended laterally to fill this space. Removal of the existing bank protection would in most cases only reduce the extent of encroachment into the channel by the new bank protection by 5 to 10 feet. It would also result in a significant increase in the cost of construction by having to work adjacent to potentially unstable slopes. Where required, the top portion of the existing gabions or rock-an-rail may be removed and replaced with compacted backfill to better accommodate the placement of landscaping and linear park features.

5.6.2 IMPACTS TO EXISTING FLOODPLAIN

The existing conditions HEC-RAS model was modified to assess the impacts the various bank protection alignment alternatives would have on the existing channel hydraulics. All of the alternatives discussed in Section 5.6.1 require some degree of encroachment into the existing channel, potentially resulting in a net loss of flow area and associated increase in WSELs and flow velocity. However, as part of construction, significant removal of sediment between the new banks protection will occur. The resultant channel will feature consistent cross-sectional geometry and maximum conveyance capacity. The revised HEC-RAS models are based on the conceptual alignments discussed in Sections 5.6.1, and include both the bank protection encroachments and full channel excavation between banks to provide uniform cross-sectional geometry. Copies of the revised channel cross-sections superimposed over the existing conditions channel geometry have been provided in Appendix J, as well as output data for each of the revised HEC-RAS models. Table 7 provides a summary of the HEC-RAS analysis results for the four alignment alternatives.

TABLE 7
SUMMARY OF HEC-RAS RESULTS FOR ALIGNMENT ALTERNATIVES

HEC-RAS XS	Existing WSEL (ft)	Existing Velocity (fps)	Alternative 1			Alternative 2			Alternative 3			Alternative 4		
			WSEL (ft)	ΔWSEL (ft)	Velocity (fps)	WSEL (ft)	ΔWSEL (ft)	Velocity (fps)	WSE (ft)	ΔWSEL (ft)	Velocity (fps)	WSEL (ft)	ΔWSEL (ft)	Velocity (fps)
1500	2545.33	11.87	2546.09	0.76	10.83	2545.98	0.65	10.98	2546.12	0.79	10.80	2546.12	0.79	10.80
1450	2544.44	12.16	2545.54	1.10	10.73	2545.39	0.95	10.90	2545.57	1.13	10.69	2545.57	1.13	10.69
1400	2543.83	11.94	2544.44	0.61	12.07	2544.46	0.63	11.81	2544.43	0.60	12.13	2544.43	0.60	12.13
1350	2543.49	10.98	2544.07	0.58	11.33	2544.10	0.61	10.95	2544.15	0.66	10.90	2544.15	0.66	10.90
1300	2541.64	11.96	2542.30	0.66	11.97	2542.18	0.54	12.12	2542.32	0.68	11.96	2542.32	0.68	11.96
1230	2537.84	16.34	2538.44	0.60	16.65	2539.07	1.23	15.27	2538.41	0.57	16.70	2538.41	0.57	16.70
1220	2537.17	15.24	2537.18	0.01	15.23	2537.17	0.00	15.24	2537.18	0.01	15.23	2537.18	0.01	15.24
1200	2535.67	13.72	2535.69	0.02	13.68	2535.67	0.00	13.72	2535.69	0.02	13.69	2535.68	0.01	13.70
1120	2536.02	11.78	2536.04	0.02	11.76	2536.02	0.00	11.78	2536.04	0.02	11.76	2536.03	0.01	11.77
1110	2532.00	16.50	2531.94	-0.06	16.60	2532.00	0.00	16.50	2531.95	-0.05	16.60	2531.97	-0.03	16.55
1100	2530.57	14.97	2531.21	0.64	14.98	2531.30	0.73	14.85	2531.21	0.64	14.98	2531.04	0.47	15.24
1050	2528.34	15.94	2528.87	0.53	16.31	2528.88	0.54	16.37	2528.87	0.53	16.31	2528.77	0.43	16.33
1010	2526.64	14.97	2526.57	-0.07	15.08	2526.58	-0.06	15.11	2526.57	-0.07	15.08	2526.57	-0.07	15.08
1000	2524.88	11.95	2523.53	-1.35	10.31	2524.45	-0.43	9.56	2523.79	-1.09	8.87	2523.46	-1.42	9.11
990	2524.60	11.48	2523.42	-1.18	9.73	2524.35	-0.25	9.11	2523.29	-1.31	9.83	2522.91	-1.69	10.14
975	2523.87	12.20	2522.85	-1.02	10.61	2523.91	0.04	9.85	2522.68	-1.19	10.80	2522.22	-1.65	11.21
965	2523.87	10.84	2522.52	-1.35	10.83	2523.65	-0.22	10.02	2522.35	-1.52	10.97	2521.84	-2.03	11.44
950	2523.32	11.55	2521.88	-1.44	11.79	2523.17	-0.15	10.80	2521.63	-1.69	12.08	2521.03	-2.29	12.62
900	2522.18	13.11	2520.81	-1.37	13.19	2521.77	-0.41	13.25	2517.83	-4.35	18.09	2517.54	-4.64	17.90
875	2519.10	17.82	2520.50	1.40	12.90	2520.73	1.63	14.58	2516.67	-2.43	17.90	2516.40	-2.70	17.59
865	2518.51	16.84	2519.95	1.44	13.33	2519.84	1.33	15.41	2514.67	-3.84	16.90	2514.56	-3.95	16.68
850	2518.39	11.15	2519.25	0.86	13.92	2518.52	0.13	16.75	2513.77	-4.62	14.79	2513.82	-4.57	14.37
825	2517.93	10.84	2515.66	-2.27	18.84	2516.05	-1.88	19.06	2513.39	-4.54	13.11	2513.30	-4.63	13.20
800	2517.30	11.67	2514.23	-3.07	18.16	2514.52	-2.78	18.42	2512.78	-4.52	13.49	2512.51	-4.79	13.91
750	2515.69	13.42	2511.59	-4.10	15.89	2511.68	-4.01	16.20	2510.68	-5.01	15.23	2510.75	-4.94	14.90
700	2515.47	11.63	2510.66	-4.81	14.88	2510.60	-4.87	15.44	2509.82	-5.65	13.98	2509.77	-5.70	14.05
650	2512.76	15.07	2509.19	-3.57	15.00	2509.25	-3.51	15.05	2508.60	-4.16	13.68	2508.48	-4.28	13.86
600	2510.40	15.18	2508.14	-2.26	14.97	2508.50	-1.90	14.31	2507.76	-2.64	13.43	2507.62	-2.78	13.57
550	2507.96	14.42	2506.91	-1.05	14.57	2507.43	-0.53	13.98	2506.90	-1.06	12.70	2506.49	-1.47	13.38
500	2507.18	14.07	2506.60	-0.58	13.33	2506.86	-0.32	13.73	2506.55	-0.63	12.02	2506.31	-0.87	12.01
450	2506.53	11.87	2505.83	-0.70	12.48	2506.08	-0.45	12.92	2506.04	-0.49	11.01	2505.80	-0.73	10.98
400	2505.69	11.64	2505.33	-0.36	11.67	2505.56	-0.13	12.12	2505.74	0.05	10.12	2505.52	-0.17	10.03
350	2505.08	11.35	2504.38	-0.70	12.50	2504.45	-0.63	13.22	2505.32	0.24	10.22	2505.16	0.08	9.99
325	2504.10	12.97	2504.36	0.26	11.65	2504.26	0.16	12.91	2504.76	0.66	11.27	2504.72	0.62	10.80
300	2503.67	12.91	2504.11	0.44	11.54	2504.04	0.37	12.51	2503.69	0.02	13.13	2503.82	0.15	12.44
290	2502.81	12.31	2502.18	-0.63	13.97	2503.16	0.35	12.67	2502.69	-0.12	13.09	2502.66	-0.15	13.16
275	2502.00	13.52	2500.15	-1.85	17.09	2500.21	-1.79	17.73	2499.95	-2.05	17.66	2499.95	-2.05	17.66
200	2498.80	17.17	2498.18	-0.62	17.63	2498.17	-0.63	17.65	2498.18	-0.62	17.63	2498.18	-0.62	17.63
150	2497.22	15.11	2497.02	-0.20	15.55	2497.01	-0.21	15.55	2497.02	-0.20	15.53	2497.02	-0.20	15.53
100	2496	14.39	2496	0.00	14.39	2496	0.00	14.39	2496	0.00	14.39	2496	0.00	14.39

5.7 ALIGNMENT ALTERNATIVES SCOUR ANALYSIS

A key element to any soil cement design is establishing the required toe-down depth to prevent future undercutting from large flows and long term channel degradation, while avoiding over-designing and driving up project costs. The procedures utilized in this study to determine the design scour depth (not including long-term scour) were previously discussed in Section 3.3. The existing conditions HEC-6 sediment transport model was modified to represent proposed channel geometry associated with each of the four alignment alternatives. It was assumed the starting condition for each alternative would include a consistent channel cross-section achieved by the excavation of excess material during construction as discussed in Section 5.6.2. The results of the analysis are presented in Table 8. For the purpose of comparison, the table includes values where the general scour component was calculated using the City of Tucson methodology. The results of the analysis indicate scour depths that range from approximately 4.1 to 9.9 feet, with an average value of approximately 6.6 feet.

5.8 LONG-TERM GRADE CONTROL

Available data appear to indicate the channel flowline within the project reach, and to the confluence with the Rillito River, has been generally stable between at least 1998 and present day (see Figure 2 in Appendix A). However, past behavior is no guarantee of how the channel will react in the future, and some accommodation should be made to account for potential future channel degradation. The current average channel slope between the Rillito River and the Mullins Landfill grade control is approximately 0.49%. Although a detailed assessment to estimate the future slope changes in the wash was not completed (i.e. a regional HEC-6 model), it is felt that this channel slope could accommodate further reduction with associated lowering of the channel. It is therefore recommended that at least two grade control structures be placed within the project reach. The first structure should be constructed as part of Phase I and be located just downstream of Kolb Executive Plaza. This structure will protect the existing 30" reclaimed water main and allow for a reduction in toe-down of the proposed upstream soil cement. The second structure should be completed as part of Phase II and located just downstream of the Tanque Verde Road. It will serve to protect the upstream bridge abutments as well as reduce the required toe-down for the proposed upstream soil cement. The reduction in the required toe-down for soil cement bank protection upstream from the proposed grade control should more than offset the additional construction costs associated with the structures.

TABLE 8
DESIGN SCOUR DEPTHS
FOR ALIGNMENT ALTERNATIVES

HEC-RAS XS	ALTERNATIVE 1		ALTERNATIVE 2		ALTERNATIVE 3		ALTERNATIVE 4	
	COT METHOD	HEC-6	COT METHOD	HEC-6	COT METHOD	HEC-6	COT METHOD	HEC-6
1600	8.9	7.3	8.9	9.4	8.9	7.4	8.9	7.4
1500	7.2	5.3	7.3	4.7	7.2	5.3	7.2	5.3
1450	7.2	4.7	7.3	4.7	7.2	4.6	7.2	4.6
1400	8.2	5.2	8.0	5.2	8.3	5.2	8.3	5.2
1350	8.6	5.3	7.3	4.7	7.3	5.1	7.3	5.1
1300	7.9	5.6	8.0	5.2	7.9	6.1	7.9	6.1
1230	11.6	7.5	11.0	6.8	11.5	7.6	11.5	7.6
1220	9.6	10.6	9.6	7.7	9.6	10.4	9.6	10.5
1200	8.3	5.9	8.3	6.0	8.3	5.9	8.3	5.9
1120	7.4	6.3	7.4	5.8	7.4	6.2	7.4	6.2
1110	10.2	7.5	10.2	7.4	10.2	7.5	10.2	7.5
1100	9.6	8.8	9.5	8.6	9.6	9.1	9.8	9.0
1050	10.0	7.3	10.1	10.2	10.0	7.3	9.9	7.3
1010	8.8	6.7	8.8	6.7	8.8	6.7	8.8	6.7
1000	6.5	4.5	6.1	4.2	5.4	4.0	5.5	4.1
990	6.1	4.3	5.7	4.1	6.1	4.3	6.3	4.4
975	6.7	4.6	6.3	4.3	6.8	4.7	7.1	4.8
965	6.9	4.7	6.5	4.4	7.0	4.7	7.3	4.9
950	7.6	5.1	7.0	4.7	7.8	5.2	8.1	5.4
900	8.7	5.7	8.8	6.1	11.9	9.7	12.1	9.7
875	8.4	5.6	9.8	7.3	11.6	10.1	11.7	9.7
865	8.9	5.8	10.4	7.9	10.5	7.7	10.6	7.6
850	9.2	6.1	11.4	8.9	8.9	6.5	8.8	6.3
825	12.8	10.4	13.0	9.9	7.9	5.7	7.9	5.7
800	12.0	8.5	12.2	8.6	8.1	5.8	8.3	6.0
750	9.8	8.3	10.1	7.7	9.2	7.7	8.8	7.5
700	9.2	6.5	9.6	7.1	8.3	6.1	8.4	6.1
650	9.2	6.6	9.3	6.6	8.2	5.9	8.3	6.0
600	9.2	6.6	8.8	6.2	8.1	5.8	8.1	6.2
550	9.0	6.4	8.7	6.1	7.6	5.5	8.0	5.8
500	8.2	5.8	8.5	6.0	7.3	5.2	7.5	5.2
450	7.7	5.4	8.1	5.6	6.7	4.8	7.0	4.7
400	7.2	5.0	7.6	5.2	6.3	4.4	6.4	4.4
350	7.9	5.4	8.5	6.4	6.4	4.5	6.6	4.4
325	7.2	6.1	8.3	6.3	7.1	4.9	7.3	4.7
300	7.4	5.0	8.0	6.3	8.5	5.7	8.6	5.4
290	8.9	6.3	8.1	5.7	8.4	5.9	8.4	5.9
275	11.0	9.9	11.5	9.5	11.4	11.4	11.4	10.5
200	11.3	8.1	11.4	8.6	11.3	8.1	11.3	8.1
150	9.9	6.9	9.9	6.9	9.9	6.9	9.9	6.9
100	9.5	7.4	9.5	6.9	9.5	7.4	9.5	7.5

5.9 MAINTENANCE ACCESS AND PEDESTRIAN PATHS

The conceptual and formal design will include accommodations for maintenance access, which may also serve the dual purpose as a pedestrian path, providing continuity with existing and future paths upstream and downstream of the project. However, it should be noted that the standard and preferred linear park layout will have to be adjusted to accommodate existing constraints due to limited space above the east and west banks. The formal planning and design of linear park features is beyond the scope of this report as well as the formal design for the new soil cement bank protection. However, a concept plan for a future linear park based on the conceptual bank protection alignment was completed and is provided in Appendix L.

The proposed design includes the standard 8 foot width soil cement section, as well as an additional 4.5' on the backside of the soil cement that will be provided in the last three lifts to provide a 12.5' top width. Standard railing will be provided along the top of the soil cement. Access ramps will be provided every ½-mile within the project reach, where possible, and will be designed not to exceed a 12:1 slope. Preference to locations for the access ramps will be given where access is available directly to the ramp without having to travel along the maintenance path. Underpasses are planned at both the Tanque Verde Road (Phase II) and Speedway Boulevard (Phase III) and will be designed with slopes that do not exceed 20:1 (5% grade) consistent with current linear park requirements.

5.10 PRELIMINARY CONSTRUCTION COST ESTIMATES

An opinion of probable cost was provided for each alignment alternative and was broken down by phase, as well as by FEMA project where applicable (See Figure 9). For Phase I, the distinct segments correspond to the three individual FEMA mitigation projects as well as an additional segment downstream of Kolb Executive Park which will extend improvements to match the extents of the Pantano Townhomes project. Potential additional work in Phase I that will not be funded by FEMA includes a new grade control structure located just downstream of Kolb Executive Plaza, and repairs to the existing downstream most grade control structure associated with the Mullins Landfill bank protection. As previously discussed, FEMA does not fund the construction or repair of grade control structures. Table 9 provides a preliminary cost estimate summary for the four alignment alternatives, and identifies estimated construction costs for Phase I and Phase II work. Detailed cost estimates by bid item are provided in Appendix M.

Soil cement quantities for 100-year alternatives were based on preliminary top of bank protection profiles that were assumed to be 1' above the 100-year WSELs. Soil cement quantities for alternatives utilizing 10-year bank protection next to Kolb Executive Park and Kolb Plaza were based on the 10-year water surface profiles generated by HEC-RAS.

Toe-down depths for the soil cement were based on the results of the scour analysis. The actual values used for the preliminary cost estimates are shown on the 30% Concept Plans discussed in Section 6.0. Standard soil cement construction practice has been assumed which consists of an 8' wide structure, constructed in 8" lifts, and sloped at 1:1. The top three lifts of the structure will be increased to a width of 10' to better accommodate the future maintenance and pedestrian path.

A unit cost of $72 per cubic yard was assumed for in-place soil cement and includes the cost of cement. The geotechnical investigation did not include a soil cement mix analysis based on site specific materials. Therefore, a lumped cost was utilized based on data for similar projects in the region. It is anticipated that there will additional effort and coordination with PCRFCD to ensure that reasonable unit costs based on current or projected market prices, as well as project specific conditions, are being utilized for soil cement and other construction bid items.

Quantities for channel excavation and fill behind the proposed bank protection were calculated using the Civil3D program to compare the difference in volume between the existing conditions surface model, and the surface models which represented the final proposed channel grades and various bank protection profiles.

TABLE 9
PRELIMINARY CONSTRUCTION
COST ESTIMATES (in millions)

PHASE I				
	Alternative 1	Alternative 2	Alternative 3	Alternative 4
Segment 1 (Mullins Landfill - FEMA #318)	0.72	0.72	0.72	0.72
Segment 2 (Pantano Townhomes - FEMA #320)	1.39	1.39	1.33	1.33
Segment 3 (Kolb Executive Park - FEMA #311)	1.11	1.30	1.11	1.30
TOTAL FOR FEMA PROJECTS	3.22	3.41	3.16	3.35
Segment 4 (Reach North of FEMA #311)	1.29	1.29	1.29	1.29
Segment 5 (Mullins Grade Control Improvements)	0.32	0.32	0.32	0.32
Segment 6 (Reach South of FEMA #311)	0.47	0.47	0.47	0.47
TOTAL FOR NON-FEMA PROJECTS	2.08	2.08	2.08	2.08
TOTAL PHASE I	5.30	5.49	5.24	5.43
PHASE II				
TOTAL PHASE II	3.59	3.78	3.51	3.71
TOTAL PHASES I & II	**8.89**	**9.27**	**8.75**	**9.14**

6.0 DEVELOPMENT OF DESIGN CONCEPT PLANS

6.1 RECOMMENDED ALTERNATIVE

Per the project scope, 30% Concept Plans have been prepared for the recommended alignment alternative. The results of the alternatives analysis indicate that Alignment Alternative 2 best meets the project constraints and has the greatest possibility for success given the potential critical path items and time constraints associated with the project. The selected alignment includes the construction of 100-year soil cement along both banks with an east bank alignment that is in front (or west) of the existing TEP power poles (see Figure 13). The primary benefits of Alignment 2 are as follows:

- Alignment 2 will have fewer issues associated with construction around the existing TEP poles. TEP has indicated a preference for this alignment which will likely reduce the negotiation time for approval of the design, and for the acquisition of their parcel on which the poles are located. Control of this parcel is critical to project construction.

- No property takes or easements must be obtained from the Pantano Townhomes HOA for the construction or long term maintenance of the project along this alignment. This removes a significant critical path item from the project schedule that has the potential to delay the project and negatively impact FEMA funding for the Phase I improvements.

- The incremental cost savings of utilizing segments of 10-year soil cement along the west bank ($360K) does not appear significant enough to outweigh the potential risks of relying upon the existing bank protection for greater flow events.

The 30% Concept Plans for Alternative 2 have been provided in half-size in Appendix N. The primary purpose of the plans was to present the horizontal and vertical alignment of the project as well as the major design elements. They also serve to help assess significant project constraints and constructability issues. The 30% plans will be revised based on comments from PCRFD, impacted utilities, and others which will allow the project to move into formal design with resolution of most of the significant design issues.

6.2 SUMMARY OF DESIGN CRITERIA

The following subsections discuss in the major design criteria for the development of the 30% Concept Plans.

6.2.1 BANK PROTECTION PROFILE

The top of soil cement profile was established with the assumption that it must be a minimum of 1' above the calculated 100-year water surface elevation. As the project will be phased, it was necessary to evaluate conditions for both the Phase I water surface elevation, as well as the "ultimate" condition which includes the Phase II improvements. Each of these scenarios had the highest WSELs in certain reaches when compared to the other. A composite profile that represented the highest of the two profiles along the entire project was used to establish the finished grade at the top of the soil cement. The profile was "smoothed" to eliminate unnecessary grade-breaks. Slopes along the profile ranged from 0.26% to 1.20%, except at underpasses, which were designed at 5% (20:1) or less.

6.2.2 GRADING BEHIND THE SOIL CEMENT

The proposed alignment and profile will require a significant amount of compacted fill along the east bank to provide structural support for the new soil cement bank protection. It will also required fill in the low areas created behind new soil cement which will tend to collect runoff and debris. As part of the earthwork analysis for the 30% Concept Plans, an attempt was made to extend a 1% to 2% slope upward from the back of the east bank soil cement to match existing grade. This approach provides the best scenario to accommodate the future linear park improvements as well as access to the existing TEP poles. It would also facilitate positive drainage towards the wash. The results of the analysis indicate that the 1% to 2% slope can indeed be accommodated, although significant grading within the Pantano Townhomes common area will be required. A fill line representing the match point for the grading has been shown on the 30% Concept Plans. The earthwork analysis indicates sufficient excess material will be generated as part of channel excavation to meet the fill requirements of the project.

6.2.3 SOIL CEMENT TOE-DOWN DEPTH

The toe-down depths for the 30% design were derived from the Alignment Alternative 2 scour analysis. As discussed, calculated scour depths ranged from 4.1' to 9.9' within the reach of proposed construction. The minimum allowable toe-down was 8', which was considered reasonable for a regional watercourse. In reaches where the calculated toe-down depth was between 8' and 10', a default value of 10' was used. Toe-down was increased where necessary to match the required toe-down at grade control structures. This increased toe-down was extended for a distance of 80' from the toe of the grade control structure and transitioned at a 6:1 slope back to the standard depth.

6.2.4 SIDE TRIBUTARY DRAINAGE

As presented in Section 3.1.2, there are 20 individual local inflows that must be incorporated into the final design. Along the east bank, most of these inflows are associated with local runoff from the Pantano Townhomes development and immediately adjacent areas. On the west bank, inflows come from both existing commercial developments and a number of stormdrains which drain Kolb Road. There is also an open channel which drains a neighborhood area to the east of Kolb Road. Table 3 identified these drainages and their current outfall structures (if any), and provided recommendations for future structures to be incorporated into the formal design.

The general approach for dealing with tributary drainage along the east bank is to collect flow via channels and drop inlet structures and convey it directly to the wash in pipes extending through the soil cement. An alternative approach for consideration would be to design shallow vertical curves in the soil cement which allow runoff to flow down the face of the soil cement and into the wash. In general, the adjacent grades on the east bank will accommodate this approach given the proposed fill limits shown on the 30% plans. However, significant grading would be required within the Pantano Townhomes common area to ensure proper drainage. For the larger channel on the east bank located directly north of Mullins Landfill (TD7 on Figure 4) an 8'x5' RCBC has been proposed through the soil cement. This approach will avoid the need to "wrap" the soil cement at the confluence and construct a pedestrian bridge.

On the west bank, existing stormdrain pipes which currently discharge to the wash will be extended or trimmed as appropriate to match the proposed soil cement alignment. Pipe outlets will be constructed

with headwalls set back into the face of the soil cement consistent with current practice. Flapgates are not proposed at most locations under the current concept design as the 100-year flow in the Pantano Wash will not have a negative impact on adjacent properties. The resulting backwater will be contained in inlet structures and stormdrains, or will back-up into washes at an elevation lower than existing 100-year WSELs. Where possible, pipe outlet invert elevations at the soil cement have been set at 5 to 6 feet above the finished flowline. The purpose of this approach was to minimize the slope of the incoming pipe and the associated flow velocity, as well as to discourage entry into the pipes by pedestrians in the wash. Runoff from commercial areas will either be captured using grate inlets and pipes extended thorough the soil cement, or for minor flows, conveyed under the maintenance path using scuppers.

6.3 PROJECT STAGING AREA

The construction of soil cement requires unhindered access to the wash at preferably multiple locations, as well as a large staging area for the soil cement batch plant and stockpiling of material. Two suitable locations for a staging area have been identified close to the project site. The preferred location is the City of Tucson owned parcel 133-110-003J, which is located just south of the Mullins Landfill on the east bank (see Figure 6 – Property Ownership Map). The parcel is over 9 acres in size and completely undeveloped. Temporary ramps would have to be constructed over the existing soil cement and at the existing Mullins Landfill grade control structures. Offsite access to the parcel would likely be via Prudence Road and through what appears to be a private landfill owned by Boone Operations Company.

A second option would be to utilize what appears to be a maintenance yard in the southwest corner of Udall Park, which is owned and operated by City of Tucson. It appears to be of adequate size and is located within approximately 700 feet of the project. It would be necessary to obtain an access easement from the Pantano Townhomes HOA to efficiently utilize this site. Offsite access to the site would likely be from Tanque Verde Road. It appears a suitable route exists along the western boundary of the park which could be utilized without disruption to park activities.