PIMA COUNTY REGIONAL FLOOD CONTROL DISTRICT
TECHNICAL POLICY

POLICY NO.: Technical Policy, TECH-003 **EFFECTIVE DATE:** November 24, 2010

POLICY NAME: Minimum Construction Requirements for Manufactured Home Foundations in Floodway Fringe Areas

PURPOSE: To clarify Sections 16.34.030.B.2 and 3 the Ordinance regarding methods for installing manufactured homes (MH) in floodway fringe areas. This policy is intended to provide minimum construction standards for MH foundations while reducing the need for an applicant to obtain the services of an Arizona registered civil engineer, as would otherwise be required by the Office of Manufactured Housing (OMH).

BACKGROUND: The Floodplain and Erosion Hazard Management Ordinance (Ordinance) requires the minimum elevation of the bottom of the lowest structural member of a MH to be at or above the regulatory flood elevation (RFE), and this elevation be certified by an Arizona-registered civil engineer or land surveyor upon completion of installation. This section also describes the three methods to meet the elevation requirement:

1. Elevate on a compacted fill pad, constructed at or above the Base Flood Elevation (BFE);
2. Elevate on a perimeter load-bearing stem wall, extended to stable soil with interior piers which are not subject to erosion hazard;
3. Elevate on piers which are founded in stable soil and spaced beneath the structural frame of the MH no more than 10 feet apart.

Historically, when permitting MHs, the District did not prescribe a method of elevation. This resulted in the placement of MHs that may not be sufficiently protected from the flood and erosion hazards present on the property. The January 5, 2009 version (1/5/09 Version) of this policy addressed this deficiency by prescribing specific construction standards for the methods of elevation described above based on a range of flood and erosion hazards and in conformance with the following publications, unless otherwise justified:

1) FEMA document titled: *Manufactured Home Installation in Flood Hazard Areas* (FEMA 85), dated 9/85,
2) FEMA document titled: *Protecting Manufactured Homes from Floods and Other Hazards, a Multi-Hazard Foundation and Installation Guide (FEMA P-85, Second Edition),* dated 11/09.
3) HUD Model Manufactured Home Installation Standards, 24 CFR 3285, and
4) HUD document titled: *Permanent Foundations Guide for Manufactured Housing*, dated 9/96.

Refer to the 1/5/09 Version of this policy for a discussion regarding these publications.

The District updated this policy on November 2, 2009 (11/2/09 Version). The 11/2/09 Version established requirements to use the OMH foundation standards for sheet flood hazards with flow depths of 1 foot or less, and the use of District standards for the greater flow depths, in accordance with the Table found in the 11/2/09 Version. Applicants could still retain the services of an Arizona registered civil engineer as an alternative to using either the OMH or District standards.

Since November 2, 2009, the District was approached by representatives of the Arizona Housing Association (AHA), who represent the Manufactured Housing industry (dealers, manufacturers, installers) requesting a fourth method of elevation as an additional safe option for floodplain installations. Since FEMA P-85 was also completed since adoption of the 11/2/09 Version, the District also referenced that document in evaluating the request of the AHA. Although FEMA P-85 allows various alternative methods of foundation erosion protection, the District limits the choice to establishing a minimum toe-down requirement based on 100-year

flow depth and general land slope through the MH site. FEMA P-85 also approaches debris impact protection by adding redundant vertical support elements; the District instead desires to insure adequate impact resistance is provided to each foundation element, avoiding the need for redundancy.

Additionally, since adoption of the 11/2/09 Version the issue of appropriate protection of perimeter blocking/support from flood forces has arisen. Note that this perimeter support may take the form of piers, non-load-bearing block skirting, or a combination of these elements. The District has determined that the I-beam and marriage line piers are adequate to provide a stable structure as long as they are constructed in accordance with this policy, and that the serviceability of the MH is maintained when all flood damage to the perimeter blocking/support is repaired immediately after a flood.

This revised policy (11/24/10 Version) adds a fourth method of elevation consisting of circular, reinforced concrete piers cast-in-place to grade supporting jack stands with soil anchors. The 11/24/10 Version also updates citations, addresses issues associated with perimeter blocking and modifies general requirements based on current usage and new information.

DEFINITIONS:

The following definitions shall apply to the words and phrases within Technical Policy TECH-003:

1. Load-Bearing Stem Wall (or load-bearing block skirting) is a perimeter foundation wall which is designed to resist the vertical live and dead loads of the MH which are applied at the perimeter, along with lateral and uplift wind loads applied to the MH. A load-bearing stem wall foundation system does not use soil anchors to resist lateral and uplift wind loads applied to the MH.
2. Non-Load Bearing Stem Wall (or non-load-bearing block skirting) is a perimeter wall constructed for aesthetic purposes and supports no loads, or is a perimeter wall which is designed to support perimeter live and dead loads only (perimeter blocking/support). A non-load bearing stem wall must rely on soil anchors to resist lateral and uplift wind loads applied to the MH.
3. Perimeter blocking/support is required support for vertical dead and live loads applied at the perimeter of the MH. In general, this support is required on both sides of side wall exterior doors (such as entry, patio, and sliding glass doors) and any other side wall openings of 48 inches or greater in width. Perimeter blocking/support may be required at other locations along the MH perimeter; check the MH manufacturer's installation instructions for this requirement.
4. Skirting remaining detached from the MH means that the perimeter of the MH may rest on the skirting and therefore the skirting may support vertical loads, but the skirting shall not be attached to the MH in a manner which would transfer lateral loads between the skirting and the MH.

POLICY:

A. General Requirements:

1. If the MH encroaches into an Erosion Hazard Setback Area, is in a study area that establishes a requirement for an engineering analysis, or if the District determines that, due to unusual conditions, engineering is required, then the engineering analysis requirements supersede this policy.

2. Hydraulic flood forces are eliminated from the MH itself by elevating the bottom of the structural frame at or above the RFE. Proper elevation shall be verified by a completed Elevation Certificate, sealed by an Arizona-registered land surveyor or civil engineer, and approved by the District.

3. The MH shall be oriented with the long axis parallel to the direction of flow. This will minimize the flow obstruction and reduce potential scour, debris impact, and hydrodynamic drag on the foundation.

4. Foundation details and specifications shall either be shown on the site plan, or the appropriate Figure(s) referenced on the site plan.

5. The applicant may install the MH in accordance with the OMH standard, entitled "*Minimum Standards for Manufactured Housing Foundations in Floodplains"*, sealed on 10/1/09 by Lloyd Rogers, and approved by the OMH on 10/14/09, when all of the following apply:
   a. The MH is proposed on a foundation consisting of built-up piers with soil anchors, a load-bearing stem wall, or a fill pad,
   b. The MH is proposed in a sheet flood floodplain with an anticipated 100-year flow depth (BFE) of 1 (one) foot or less, and
   c. The MH is proposed in conformance with provisions A.1 through A.3.

6. The applicant may install the MH in accordance with this policy if it is proposed in conformance with provisions A.1 through A.3, and when either of the following apply:
   a. The MH is proposed on a foundation consisting of built-up piers with soil anchors, or a fill pad in a floodplain with anticipated 100-year flow depths that are greater than 1 foot, OR
   b. The MH is proposed on a foundation consisting of circular concrete place piers cast-in-place to grade supporting jack stands with soil anchors in a local floodplain with anticipated 100-year flow depths that are 1 foot or less.

B. MH Installed on Built-up Piers, with soil anchors:

If built-up piers are proposed in floodplains with anticipated flood depths of more than 1 foot, they may be allowed as long as the following conditions are met:

1. Piers shall be constructed in accordance with the Table 003-A (attached), which prescribes toe-down depths for various 100-year flow depths and velocities.
2. Piers shall be constructed in accordance with the design presented in Figures 003-A and 003-B (attached).
   a. Piers shall be a reinforced masonry column attached to a reinforced, cast-in place concrete footer.
   b. Piers are used to support vertical loads only, and pier footer area for marriage line piers shall be determined based on soil characteristics found on-site at the time of construction, and required load specified by MH manufacturer.
   c. Chassis I-beam and marriage line piers shall be sized to support the MH vertical live and dead loads in the absence of perimeter blocking/support. It is **recommended** that footers for perimeter blocking/support be extended to scour depth per Table 003-A (for built-up CMU piers), Table 003-B (for circular cast-in-place piers supporting jack stands), or Table 014-A (for non-load-bearing block skirting), and that the perimeter support(s) be protected from hydraulic drag and hydrodynamic impact.
   d. All lateral (both in the longitudinal and transverse directions) and uplift forces shall be resisted by soil anchors installed in accordance with the manufacturer's instructions and the requirements of the OMH.
   e. This design includes effects of pier scour due to flow impingement on 16-inch square piers, as well as hydrodynamic and debris impact forces against the piers.

3. Piers along the chassis "I"-beam shall be spaced no more than 6 feet apart. Piers along the marriage line shall be spaced as recommended by the MH manufacturer

4. Soil anchors to resist lateral and uplift forces shall be installed in accordance with anchor manufacturer's specifications and spaced as required by OMH.

5. If non-load bearing block skirting is proposed, the block skirting shall be vented in accordance with Section 16.26.030.E of the Ordinance and *Technical Policy TECH-022*. A minimum of one square inch of opening per square foot of enclosure shall be provided. The skirting shall remain detached from the MH in order to prevent transfer of lateral hydraulic forces on the block skirting to the MH and its foundation.

C. MH Installed on a Fill Pad

If a fill pad is proposed in floodplains with anticipated flood depths of more than 1 foot, it may be allowed as long as the following conditions are met:

1. The fill pad shall be constructed in accordance with *Technical Policy TECH- 006*, the top of the fill pad shall be at or above the BFE.

2. Soil anchors shall be installed in accordance with requirements established by the OMH. No additional anchoring for flood forces is required.

3. MH shall be installed with the bottom of the lowest horizontal structural frame at or above the RFE.

4. The MH foundation system for installation on a fill pad meeting these requirements is considered conventional.

D. MH Installed on Circular Piers Cast-in-place to grade supporting jack stands, with soil anchors:

If cast-in-place circular reinforced concrete piers cast-in-place to grade supporting jack stands, with soil anchors are proposed in floodplains of 1 foot or less, they may be allowed as long as the following conditions are met:

1. Piers shall be constructed in accordance with the Table 003-B (attached), which prescribes toe-down depths for various 100-year flow depths and velocities.
2. Piers shall be constructed in accordance with the design presented in Figures 003-C and 003-D (attached).
   a. Piers shall be a reinforced concrete column of constant diameter which also functions as a concrete footer to support applied vertical loads.
   b. Piers are used to support vertical loads only, and pier footer area for marriage line piers shall be determined based on soil characteristics found on-site at the time of construction, and required load specified by MH manufacturer.
   c. Chassis I-beam and marriage line piers shall be sized to support the MH vertical live and dead loads in the absence of perimeter blocking/support. It is **recommended** that footers for perimeter blocking/support be extended to scour depth per Table 003-A (for built-up CMU piers), Table 003-B (for circular cast-in-place piers supporting jack stands), or Table 014-A (for non-load-bearing block skirting), and that the perimeter support(s) be protected from hydraulic drag and hydrodynamic impact.
   d. All lateral (both in the longitudinal and transverse directions) and uplift forces shall be resisted by soil anchors.
   e. This design includes effects of local pier scour due to flow impingement on circular piers, as well as hydrodynamic and debris impact forces against the jack stands.
   f. Jack stands shall be attached to chassis I-beam for additional stability.
   g. Vertical footer reinforcing steel shall extend above the top of the cast-in-place pier to the Base Flood Elevation, and shall be spaced and oriented to limit the lateral and transverse movement of the jack stand base to a maximum of 3 inches, as detailed on Figure 003-D.

3. Piers along the chassis I-beam shall be spaced no more than 6 feet apart. Piers supporting the marriage beam and the perimeter shall be spaced as recommended by the MH manufacturer

4. Soil anchors to resist lateral and/or uplift forces shall be installed in accordance with anchor manufacturer's specifications and spaced as required by OMH.

5. If non-load bearing block skirting is proposed, the block skirting shall be vented in accordance with Section 16.26.030.E of the Ordinance and *Technical Policy TECH-022*. A minimum of one square inch of opening

per square foot of enclosure shall be provided. The skirting shall remain detached from the MH in order to prevent transfer of lateral hydraulic forces on the block skirting to the MH and its foundation.

E. MH Installed on Load-Bearing Perimeter Stem Wall:

If a stem wall is proposed in floodplains with anticipated flood depths of more than 1 foot, the foundation shall be designed by an Arizona-registered civil engineer, submitted for review and approval by the District. For anticipated flood depths of 1 foot or less, use the OMH details. See Section A.5.

F. MH Installed on Piles or Posts (not on a fill pad):

If piles or posts are proposed, the foundation shall be designed by an Arizona-registered civil engineer, submitted for review and approval by the District.

This policy is intended to provide minimum construction standards for manufactured home foundations while reducing the need for an applicant to obtain the services of an Arizona registered civil engineer. Should an applicant disagree with standards of this policy, desire an alternative design, or be required to submit an engineering analysis pursuant to this policy or for other reasons, the engineering analysis shall also prescribe the maximum anticipated scour, the minimum toe-down depth, and the constriction details for the foundation.

APPROVED BY:

S Shields 11/24/16

Suzanne Shields, P.E.
Director Date

Original Policy Approved: January 5, 2009
Date(s) Revised: November 2, 2009
Figures 003-A and 003-B revised January 28, 2020

TABLE 003-A

BUILT-UP PIERS

TOE-DOWN DEPTH REQUIREMENTS FOR EROSION PROTECTION OF PIERS
PIMA COUNTY REGIONAL FLOOD CONTROL DISTRICT TECHNICAL POLICY TECH-003

ASSUMPTIONS:

1. bottom of structural frame of MH elevated above RFE;
2. MH installed such that long dimension is aligned with the direction of flow;
3. manning's roughness coefficient for overbank flow per Table 8.1, SMDDFM = 0.060;

100-YR NORMAL FLOW VELOCITY FOR BROAD, FLAT FLOODPLAINS USING MANNING'S EQUATION, fps

Flow Depth, ft	slope, ft/ft 0.002	0.004	0.006	0.008	0.010	0.012	0.014	0.016	0.018	0.020	0.022	0.024	0.026	0.028	0.030
0.5	**0.7**	**1.0**	**1.2**	**1.4**	**1.6**	**1.7**	**1.9**	**2.0**	**2.1**	**2.2**	**2.3**	**2.4**	**2.5**	**2.6**	**2.7**
1.0	**1.1**	**1.6**	**1.9**	**2.2**	**2.5**	**2.7**	**2.9**	**3.1**	**3.3**	**3.5**	**3.7**	**3.8**	**4.0**	**4.1**	**4.3**
1.5	**1.4**	**2.0**	**2.5**	**2.9**	**3.2**	**3.5**	**3.8**	**4.1**	**4.3**	**4.6**	**4.8**	**5.0**	**5.2**	**5.4**	**5.6**
2.0	**1.8**	**2.5**	**3.0**	**3.5**	**3.9**	**4.3**	**4.6**	**5.0**	**5.3**	**5.5**	**5.8**	**6.1**	**6.3**	**6.5**	**6.8**
2.5	**2.0**	**2.9**	**3.5**	**4.1**	**4.5**	**5.0**	**5.4**	**5.7**	**6.1**	**6.4**	**6.7**	**7.0**	**7.3**	**7.6**	**7.9**
3.0	**2.3**	**3.2**	**4.0**	**4.6**	**5.1**	**5.6**	**6.1**	**6.5**	**6.9**	**7.2**	**7.6**	**7.9**	**8.2**	**8.6**	**8.9**

TOE-DOWN DEPTH FOR 16-INCH SQUARE BUILT-UP PIERS

Flow Depth, ft	slope, ft/ft 0.002	0.004	0.006	0.008	0.010	0.012	0.014	0.016	0.018	0.020	0.022	0.024	0.026	0.028	0.030
0.5															
1.0															
1.5															
2.0															
2.5															
3.0															

DV^2 Greater than 18

= Use AZ Office of Manufactured Housing Stds

= 36 inches deep footer

= Engineered foundation required.

NOTES

1. IF NON-BREAK-AWAY SKIRTING IS INSTALLED FLOOD VENTS ARE REQUIRED:
   - PROVIDE 1 SQUARE INCH OF NET FREE VENT AREA FOR EACH SQUARE FOOT OF MH FLOOR SPACE.
   - PLACE BOTTOM OF VENTS 1 FOOT (MAX) ABOVE NATURAL GRADE.
   - ALL SCREENS AND LOUVERS MUST AUTOMATICALLY OPEN TO ALLOW UNOBSTRUCTED FLOW OF FLOOD WATERS, OR OTHERWISE MAY BE SCREENED WITH ½-INCH MIN SCREEN.
   - DISTRIBUTE REQUIRED VENTS UNIFORMLY ON AT LEAST TWO OPPOSING WALLS.
2. PIERS SPACED ALONG CHASSIS I-BEAM AT 6-FT INTERVAL; PIERS UNDER MARRIAGE LINE SPACED PER MH MANUFACTURER'S RECOMMENDATIONS.
3. MH LONG DIMENSION ORIENTED PARALLEL TO FLOW.
4. TRANSVERSE & LONGITUDINAL LATERAL & UPLIFT FORCES DUE TO WIND LOADS RESISTED BY ANCHORING MH WITH SOIL ANCHORS, INSTALLED PER MANUFACTURER'S INSTRUCTIONS & SPACED AS REQUIRED BY STATE OF ARIZONA OFFICE OF MANUFACTURED HOUSING (AZOMH):
   "THERE MUST BE 6 TIE-DOWNS ALONG EACH LONG SIDE (MH UNDER 50' LENGTH), 7 TIE-DOWNS ALONG EACH LONG SIDE (MH 52' TO 65' LENGTH), AND 8 TIE-DOWNS ALONG EACH LONG SIDE (MH OVER 66' LENGTH)".
5. SOIL ANCHOR COMPONENTS SHALL BE PROVIDED WITH PROTECTION AGAINST WEATHER DETERIORATION & CORROSION AT LEAST EQUIVALENT TO THAT PROVIDED BY A COATING OF ZINC ON STEEL OF 0.03 OUNCE PER SQUARE FOOT OF SURFACE AREA, & SHALL HAVE MIN. ALLOWABLE WORKING LOAD OF 3150 LBS AND MAX. TENSILE STRENGTH OF 4725 LBS.
6. PRELOAD SOIL ANCHORS MINIMUM 500 LBS. TO ACTIVATE RESISTANCE OF STABILIZER PLATES AND ANCHOR HELICES.
7. USE OF SOIL ANCHOR OTHER THAN THAT SPECIFIED ON FIGURE 003-B SHALL BE JUSTIFIED USING SOIL TEST PROBE MEASUREMENTS. TEST PROBE SHALL BE OPERATED IN ACCORDANCE WITH PROBE MANUFACTURER'S INSTRUCTIONS.
8. **ASSUMPTIONS:** 1,000 PSF SATURATED SOIL BEARING CAPACITY FOR "I" BEAM PIER FOOTERS; FROST PENETRATION DEPTH 6-INCHES; BUILT-UP PIERS RESIST VERTICAL GRAVITY LOADS ONLY; SNOW LOAD 5 PSF; LIVE LOAD 40 PSF; ROOF LIVE LOAD 20 PSF; MAXIMUM MH DEAD LOAD 470 PLF; WALL HEIGHT 8-FT MAX.; MH WIDTH 32-FT OR LESS; UNDISTURBED FOUNDATION SOIL OR ENGINEERED FILL, FREE OF ORGANIC MATERIAL AND 90% COMPACTION PER PROCTER TEST, ASTM D1557. DEVIATION WILL REQUIRE A SITE-SPECIFIC ENGINEERED FOUNDATION.

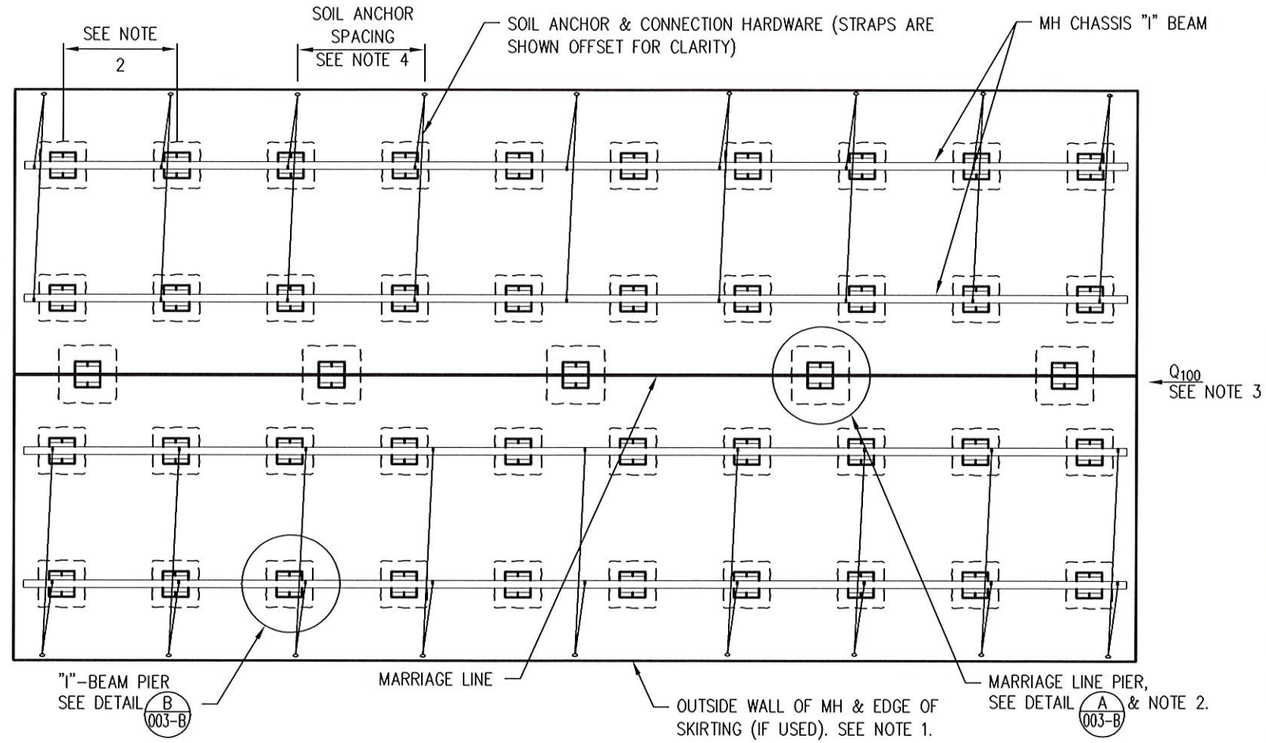

PLAN

NOTES (continued)

9. **MATERIALS:** CONCRETE 2500 PSI; MORTAR TYPE M, N, OR S PER ASTM C270; GROUT COARSE AGGREGATE PER ASTM C476; REBAR 40 KSI; CMU ASTM C90 TYPE I OF TYPE II.
10. FOOTER CONSTRUCTED BY EXCAVATING TO REQUIRED DEPTH AND DIMENSIONS, PLACING HORIZONTAL REBAR 2-#3 EACH WAY AND PLACING VERTICAL REBAR TO PROJECT MIN. 18 IN ABOVE TOP OF FOOTER & ALL REBAR OFFSET FROM SOIL BY 3 IN, AND THEN PLACING CONCRETE TO THE HEIGHT OF THE FOOTER.
11. PIERS CONSTRUCTED BY LAPPING ADDITIONAL REBAR 18 IN MIN. TO REBAR EXTENDING FROM THE TOP OF FOOTER, STACKING CMU ON FOOTER SO REBAR EXTENDS THROUGH EACH CMU CAVITY, ALTERNATING CMU DIRECTION FOR EACH CMU LAYER, GROUTING CAVITIES RODDING TO REMOVE VOIDS.
12. BUILT-UP PIERS TO CURE MIN. 14 DAYS PRIOR TO LOADING.

WIDTH AND THICKNESS OF CONCRETE FOOTER FOR MARRIAGE LINE PIERS

DESIGN LOAD ON MARRIAGE LINE PIER	ALLOWABLE SOIL BEARING CAPACITY							
	1000 PSF		2000 PSF		3000 PSF		4000 PSF	
	WIDTH	THICK	WIDTH	THICK	WIDTH	THICK	WIDTH	THICK
	FEET	INCHES	FEET	INCHES	FEET	INCHES	FEET	INCHES
2,000 LBS	2.00	6.00	1.33	6.00	1.33	6.00	1.33	6.00
3,000 LBS	2.25	6.00	1.50	6.00	1.33	6.00	1.33	6.00
4,000 LBS	2.50	8.00	1.75	6.00	1.33	6.00	1.33	6.00
5,000 LBS	2.75	8.00	2.00	8.00	1.50	6.00	1.33	6.00
6,000 LBS	3.00	8.00	2.00	8.00	1.75	8.00	1.50	6.00
7,000 LBS	3.00	8.00	2.25	8.00	1.75	8.00	1.50	8.00
8,000 LBS	3.00	8.00	2.25	8.00	1.75	8.00	1.75	8.00
9,000 LBS	3.33	8.00	2.25	8.00	2.00	8.00	1.75	8.00

NOTES:
1. 2500 PSI, GRADE 40 REINFORCING BARS
2. 2-#3 REBAR EACH WAY, CENTERED VERTICALLY IN FOOTER

Registered Professional Engineer (Civil) CERTIFICATE NO. 15610 Suzanne J. Shields Date Signed 11/30/2020 ARIZONA, U.S.A.

PIMA COUNTY
FLOOD CONTROL

FIGURE 003-A
MH INSTALLATION ON BUILT-UP PIERS WITH SOIL ANCHORS

SCALE: N.T.S. DRAWN BY: sak DATE: Aug 2019

THE SEAL of PIMA COUNTY ARIZONA

MARRIAGE LINE PIER

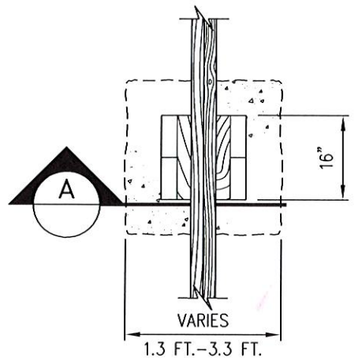

PLAN

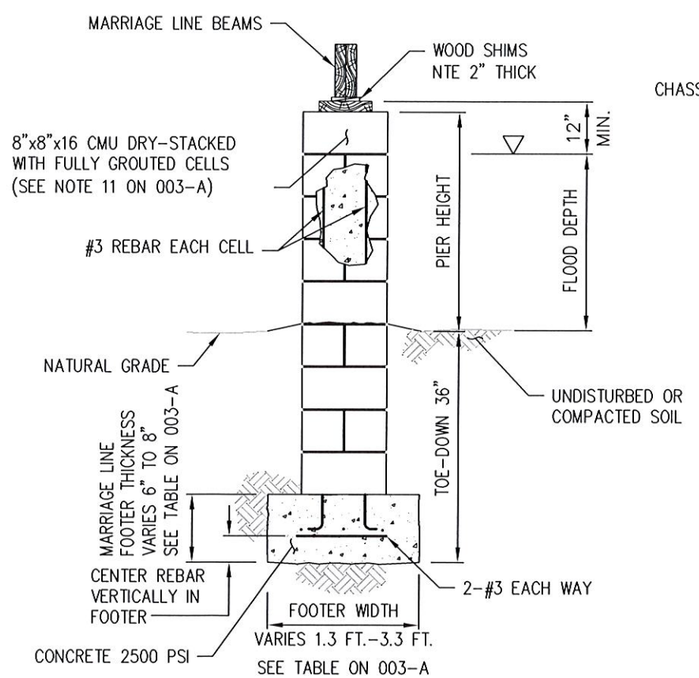

A SECTION
SCALE: N.T.S.

CHASSIS "I" BEAM PIER

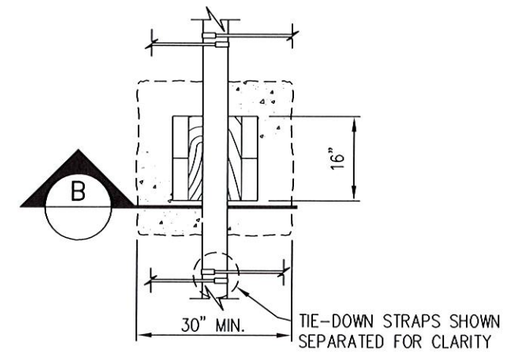

PLAN

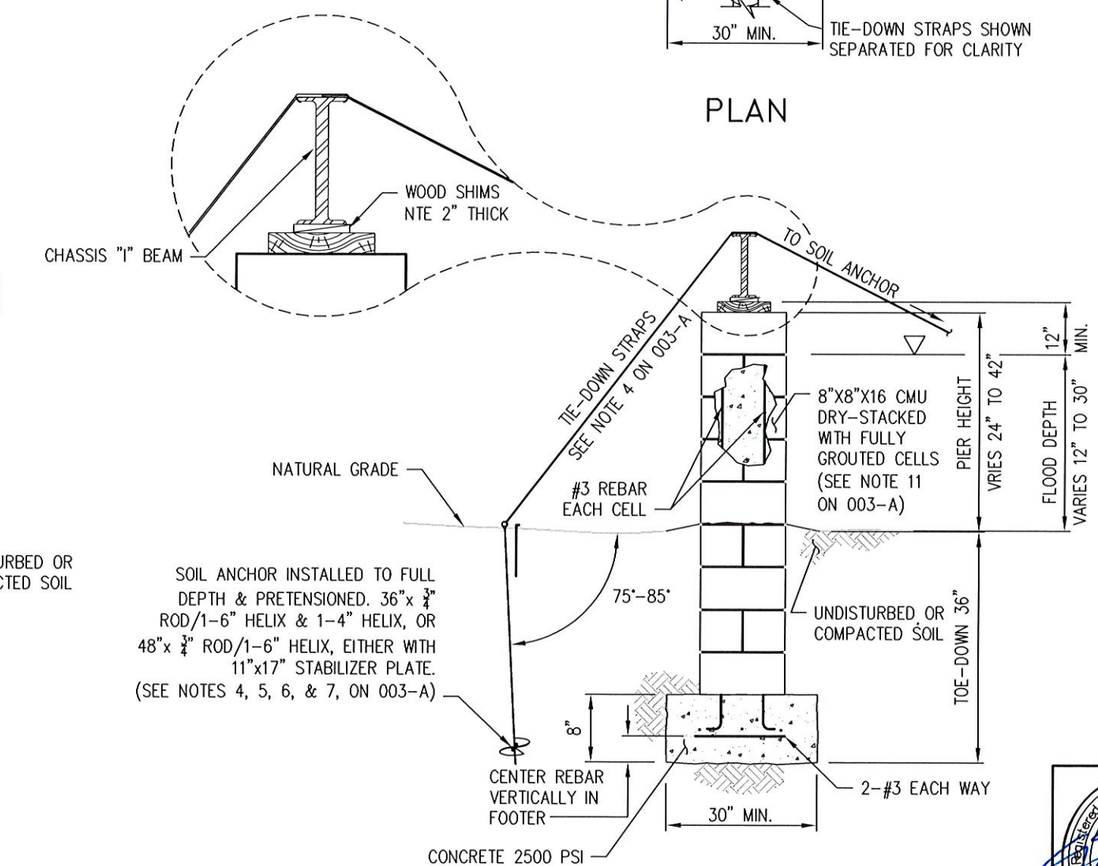

B SECTION
SCALE: N.T.S.

Registered Professional Engineer (Civil)
CERTIFICATE NO.
Suzanne J. Shields
Date Signed 1/30/2020
ARIZONA, U.S.A.

PIMA COUNTY
FLOOD CONTROL

FIGURE 003-B
MH INSTALLATION ON BUILT-UP PIERS WITH SOIL ANCHORS

SCALE: N.T.S. DRAWN BY: sak DATE: Aug 2019

THE SEAL of PIMA COUNTY ARIZONA

TABLE 003-B

CAST-IN-PLACE PIERS TO GRADE WITH JACK STANDS

TOE-DOWN DEPTH REQUIREMENTS FOR EROSION PROTECTION OF PIERS
PIMA COUNTY REGIONAL FLOOD CONTROL DISTRICT TECHNICAL POLICY TECH-003

ASSUMPTIONS:

1. bottom of structural frame of MH elevated above RFE.
2. MH installed such that long dimension is generally aligned with the direction of flow.
3. manning's roughness coefficient for overbank flow per Table 8.1, SMDDFM = 0.060

100-YR NORMAL FLOW VELOCITY FOR BROAD, FLAT FLOODPLAINS USING MANNING'S EQUATION, fps

Flow Depth, ft	slope, ft/ft 0.002	0.004	0.006	0.008	0.010	0.012	0.014	0.016	0.018	0.020	0.022	0.024	0.026	0.028	0.030
0.5	**0.7**	**1.0**	**1.2**	**1.4**	**1.6**	**1.7**	**1.9**	**2.0**	**2.1**	**2.2**	**2.3**	**2.4**	**2.5**	**2.6**	**2.7**
1.0	**1.1**	**1.6**	**1.9**	**2.2**	**2.5**	**2.7**	**2.9**	**3.1**	**3.3**	**3.5**	**3.7**	**3.8**	**4.0**	**4.1**	**4.3**
1.5															
2.0															
2.5															
3.0															

SCOUR DEPTH FOR CIRCULAR PIERS

Flow Depth, ft	slope, ft/ft 0.002	0.004	0.006	0.008	0.010	0.012	0.014	0.016	0.018	0.020	0.022	0.024	0.026	0.028	0.030
0.5															
1.0															
1.5															
2.0															
2.5															
3.0															

= beyond the range of this method

= 24 inch deep pier

= 30 inch deep pier

= 36 inch deep pier

= Foundation Design does not apply

DV2 Greater than 18

FOUNDATION NOTES

1. **FOUNDATION APPLIES ONLY TO MH (MOBILE HOMES) AND HUD MFG HOMES** INSTALLED WITHIN A REGULATORY FLOODPLAIN WITHIN PIMA COUNTY, ARIZONA. THIS FOUNDATION CANNOT BE APPLIED TO FACTORY BUILT BUILDINGS (FBBs) OR OTHER COMMERCIAL STRUCTURES.
2. FOUNDATION APPLICATION IS LIMITED TO SITES BELOW ELEVATION 3500 ft NGVD, AND SITES CONSISTENT WITH OTHER LIMITS OF APPLICABILITY OUTLINED IN PIMA COUNTY REGIONAL FLOOD CONTROL DISTRICT TECHNICAL POLICY TECH-003.
3. **ASSUMPTIONS:** 1,500 psf SOIL BEARING CAPACITY FOR I-BEAM PIERS; FROST DEPTH 0 in; SNOW LOAD 0 psf; LIVE LOAD 40 psf; ROOF LIVE LOAD 20 psf; MAX MH DEAD LOAD 32 psf; MAX 100-YR FLOOD DEPTH 1 ft; MAX FLOOD VELOCITY 4 fps; 16 ft DOUBLE-WIDE WITH 1-ft EVES AND 20° ROOF ANGLE; BOTTOM OF I-BEAM ELEVATED 1 ft (MIN) ABOVE 100-YR FLOOD DEPTH; UNDISTURBED FOUNDATION SOIL OR ENGINEERED FILL, FREE OF ORGANIC MATERIAL & COMPACTED 95% PER MODIFIED PROCTOR ASTM D-1557. DEVIATION FROM THESE ASSUMPTIONS REQUIRES AN ENGINEERING ANALYSIS.
4. **MATERIALS:** CONCRETE SHALL BE MIX OF PORTLAND CEMENT, WATER, & AGGREGATE PROPORTIONED TO PROVIDE MIN 28-DAY COMPRESSIVE STRENGTH OF 3,000 PSI. PORTLAND CEMENT SHALL BE PER ASTM C150. REBAR SHALL BE GRADE 60.
5. I-BEAM PIERS 6-ft MAX SPACING ALONG CHASSIS I-BEAM& WITHIN 2-ft OF EACH END OF MH.
6. MARRIAGE BEAM PIERS (MULTI-SECTION HOMES ONLY) ARE SPACED ALONG MARRIAGE BEAM, AND SUPPORT LIVE AND DEAD LOADS PER MH MANUFACTURER'S INSTALLATION INSTRUCTIONS FOR INSTALLATION OUTSIDE OF A FLOODPLAIN. MINIMUM DIAMETER OF MARRIAGE BEAM PIERS IS DETERMINED FROM TABLE I. OF FIGURE 003-D BASED ON THE ALLOWABLE SOIL BEARING CAPACITY OF THE FOUNDATION SOILS AND THE IMPOSED LIVE AND DEAD LOADS FROM INSTALLATION INSTRUCTIONS. USE OF ALLOWABLE SOIL BEARING CAPACITY GREATER THAN 1,500 psf IN TABLE I. IS TO BE VERIFIED IN THE FIELD USING A SOIL PENETROMETER.
7. PERIMETER BLOCKING PIERS (IF REQUIRED) ARE SPACED ALONG THE MH PERIMETER AS REQUIRED BY MH MANUFACTURER'S INSTALLATION INSTRUCTIONS FOR INSTALLATION OUTSIDE OF A FLOODPLAIN, **BUT THIS SPACING SHALL NOT BE GREATER THAN 6-FT.**
8. REQUIRED PERIMETER SUPPORT PIERS ARE LOCATED ON BOTH SIDES OF SIDEWALL EXTERIOR DOORS, PATIO DOORS, AND SLIDING GLASS DOORS; UNDER PORCH POSTS, FACTORY-INSTALLED FIREPLACES, AND FIREPLACE STOVES; UNDER JAMB STUDS AT MULTIPLE WINDOW OPENINGS; AND AT ANY OTHER SIDEWALL OPENING 48-inches OR GREATER IN WIDTH. MH MANUFACTURER'S INSTALLATION INSTRUCTIONS MAY SPECIFY OTHER POINTS OF REQUIRED PERIMETER SUPPORT.
9. MH LONG DIMENSION MUST BE ORIENTED PARALLEL TO DIRECTION OF FLOOD FLOW.
10. DUE TO ELEVATION OF THE BOTTOM OF THE CHASSIS I-BEAM 1-ft (MIN) ABOVE 100-YR FLOOD DEPTH, AND MINIMAL FLOW OBSTRUCTION TO FLOOD FLOWS PROVIDED BY PROPOSED FOUNDATION, TRANSVERS & LONGITUDINAL HORIZONTAL & UPLIFT FORCES ON MH DUE TO FLOOD LOADS ARE NEGLIGIBLE.
11. TRANSVERS & LONGITUDINAL HORIZONTAL & UPLIFT FORCES ON MH DUE TO WIND LOADS ARE RESISTED BY SOIL ANCHORS, INSTALLED PER SOIL ANCHOR MANUFACTURER'S INSTRUCTIONS FOR INSTALLATION OUTSIDE OF A FLOODPLAIN & SPACED AS REQUIRED BY STATE OF ARIZONA DEPARTMENT OF FIRE, BUILDING AND LIFE SAFETY (AZ DFBS):
    - THERE MUST BE 6 TRANSVERSE ANCHORS ALONG EACH LONG SIDE (MH UNDER 50 FT LENGTH);
    - 7 TRANSVERSE ANCHORS ALONG EACH LONG SIDE (50 ft =< MH LENGTH < 66 ft);
    - 8 TRANSVERSE ANCHORS ALONG EACH LONG SIDE (MH >= 66 ft).
    - TRANSVERSE ANCHORING SHALL BE LOCATED SUCH THAT THE FIRST AND THE LAST ANCHOR ON EACH LONG SIDE ARE WITHIN 2 FEET OF THE END OF THE MH, AND THE REMAINDER OF THE ANCHORS ARE EQUALLY SPACED ALONG THE REMAINDER OF THE MH LENGTH.
    - LONGITUDINAL ANCHORING SHALL BE PROVIDED AS REQUIRED BY THE MH MANUFACTURER'S INSTALLATION INSTRUCTIONS FOR INSTALLATION OUTSIDE OF A FLOODPLAIN, BUT SHALL NOT BE LESS THAN ONE LONGITUDINAL ANCHOR PER END.
12. SOIL ANCHORS SHALL BE CONNECTED TO THE MH USING STEEL TIE-DOWN STRAPS, INSTALLED PER THE TIE-DOWN STRAP MANUFACTURER'S INSTRUCTIONS FOR INSTALLATION OUTSIDE OF A FLOODPLAIN.
13. TIE-DOWN STRAPS, SOIL ANCHORS, STABILIZER PLATES & ALL ASSOCIATED HARDWARE SHALL PROVIDE MIN WORKING LOAD OF 3150 LBS PER ANCHOR IN THE DIRECTION OF PULL.
14. METAL JACK STANDS SHALL BE LABELED FOR A MAXIMUM COMPRESSIVE WORKING LOAD OF 6,000 lbs (FS=3) FOR I-BEAM PIERS, PERIMETER BLOCKING PIERS, OR SUPPORT PIERS, OR FOR THE DESIGN LOAD (MIN) SHOWN IN TABLE 1 OF FIGURE 003-D FOR MARRIAGE BEAM PIERS.
15. METAL JACK STANDS, TIE-DOWN STRAPS, SOIL ANCHORS, STABILIZER PLATES & ALL ASSOCIATED HARDWARE OF THE FOUNDATION AND ANCHORING SYSTEM SHALL BE PROVIDED WITH PROTECTION AGAINST WEATHER DETERIORATION AND CORROSION AT LEAST EQUIVALENT TO THAT PROVIDED BY A COATING OF ZINC ON STEEL OF 0.30 OUNCE PER SQUARE FOOT OF SURFACE AREA.
16. INSTALL SOIL ANCHORS TO FULL DEPTH SUCH THAT BOTTOM OF ANCHOR HEAD IS FLUSH WITH GRADE PRIOR TO PRE-LOADING THE SOIL ANCHOR. SOIL ANCHOR SHALL BE INSTALLED SUCH THAT ANCHOR HEAD OF THE PRE-LOADED ANCHOR IS LOCATED INSIDE THE VERTICAL PROJECTION OF THE EXTERIOR WALL OF THE MH.
17. PRE-LOAD SOIL ANCHORS BY TIGHTENING TIE-DOWN STRAPS TO ACTIVATE RESISTANCE OF STABILIZER PLATES AND SOIL ANCHOR HELICES.
18. USE OF SOIL ANCHOR (LENGTH, ROD DIAMETER, HELIX NUMBER & DIAMETER) OTHER THAN THAT SPECIFIED ON FIGURE 003-D SHALL BE JUSTIFIED USING SOIL TEST PROBE MEASUREMENTS. SOIL TEST PROBE SHALL BE OPERATED IN ACCORDANCE WITH THE TEST PROBE MANUFACTURER'S INSTRUCTIONS.
19. I-BEAM AND MARRIAGE LINE PIER IS TO BE CONSTRUCTED BY AUGERING THE FOUNDATION SOIL TO THE REQUIRED DIAMETER & SCOUR DEPTH, PLACING & SECURING REBAR IN PLACE SUCH THAT IT EXTENDS TO THE 100-YR FLOOD DEPTH VERTICALLY ABOVE GRADE, POURING CONCRETE TO GRADE, AND FINISHING CONCRETE SURFACE TO PROVIDE POSITIVE DRAINAGE. IF NECESSARY, LAP SPLICE REBAR MIN 27-inches.
20. JACK STANDS ARE TO BE CENTERED ON THE PIER & ATTACHED TO THE I-BEAM OR MARRIAGE LINE BEAM WITH APPROPRIATE PIER CAP & FASTENERS.
21. CAST-IN-PLACE CONCRETE SHALL REMAIN ABOVE 50° F & IN MOIST CONDITION FOR MIN 3 DAYS AFTER PLACEMENT. CAST-IN-PLACE CONCRETE MAY BE LOADED 7 DAYS AFTER PLACEMENT.
22. EXTENSION OF VERTICAL REBAR TO THE 100-YR FLOOD DEPTH ABOVE TOP OF PIER LIMITS LATERAL MOVEMENT OF JACK STAND BASE UNDER IMPACT & WIND LOADS TO A MAXIMUM OF 3-inches.
23. PORTION OF REBAR EXTENDING ABOVE TOP OF PIER TO BE PROVIDED WITH PROTECTION AGAINST WEATHER DETERIORATION AND CORROSION AT LEAST EQUIVALENT TO THAT PROVIDED BY A COATING OF ZINC ON STEEL OF 0.30 OUNCE PER SQUARE FOOT OF SURFACE AREA.
24. IF NON-BREAK-AWAY SKIRTING IS INSTALLED AROUND PERIMETER OF MH, FLOOD VENTS ARE REQUIRED THROUGH THE SKIRTING:
    - PROVIDE 1.0 in² OF OPEN VENT AREA FOR EACH ft² OF MH FLOOR SPACE;
    - PLACE BOTTOM OF VENTS 1 ft (MAX) ABOVE NATURAL GRADE;
    - ALL SCREENS & LOUVERS MUST OPEN AUTOMATICALLY TO ALLOW UNOBSTRUCTED ENTRY OF FLOOD WATERS, OR OTHERWISE MAY BE SCREENED WITH ½-in (MIN) SCREEN; and
    - DISTRIBUTE REQUIRED VENTS UNIFORMLY ON AT LEAST TWO OPPOSING WALLS.
25. PIER SCOUR DEPTH DETERMINED FROM TABLE 003-B BASED ON 100-YR FLOOD DEPTH AND LAND SLOPE THROUGH THE MH SITE.
26. PERIMETER BLOCKING PIERS AND PERIMETER SUPPORT PIERS SHALL CONSIST OF A METAL JACK STAND CENTERED ON A PRE-CAST 16" X 16" X 3.5" CONCRETE FOOTER. THIS PRE-CAST FOOTER SHALL BE PLACED AT GRADE UPON UNDISTURBED OR COMPACTED SOIL. METAL JACK STAND SHALL BE ATTACHED TO THE PERIMETER SUPPORT BEAM USING APPROPRIATE PIER CAP AND HARDWARE. SINCE THIS CONFIGURATION OF PERIMETER BLOCKING/SUPPORT PIER MAY BE DAMAGED DURING A FLOOD EVENT, MH OWNER SHALL INSPECT THESE PIERS AFTER EACH MAJOR FLOOD EVENT (AND AT LEAST ANNUALLY) AND SHALL IMMEDIATELY REPAIR ALL DAMAGE TO THESE PIERS. DAMAGE TO THESE PIERS FOR THE SPECIFIED MH FOUNDATION DESIGN IS CONSIDERED BY THE DISTRICT TO AFFECT THE SERVICEABILITY BUT NOT THE OVERALL STRUCTURAL STABILITY OF THE MH.

REGISTERED PROFESSIONAL ENGINEER (CIVIL) CERTIFICATE NO. 15510 SUZANNE J. SHIELDS DATE SIGNED 11/4/12 ARIZONA U.S.A.
EXP. 6/30/2013

Pima County Regional FLOOD CONTROL DISTRICT

THE SEAL of PIMA COUNTY ARIZONA

NOTES for FIGURES 003-C AND D
MH ON CONCRETE PIERS CAST TO GRADE & SUPPORTING JACK STANDS

SCALE: NONE | DRAWN BY: ads | DATE: NOV 2010

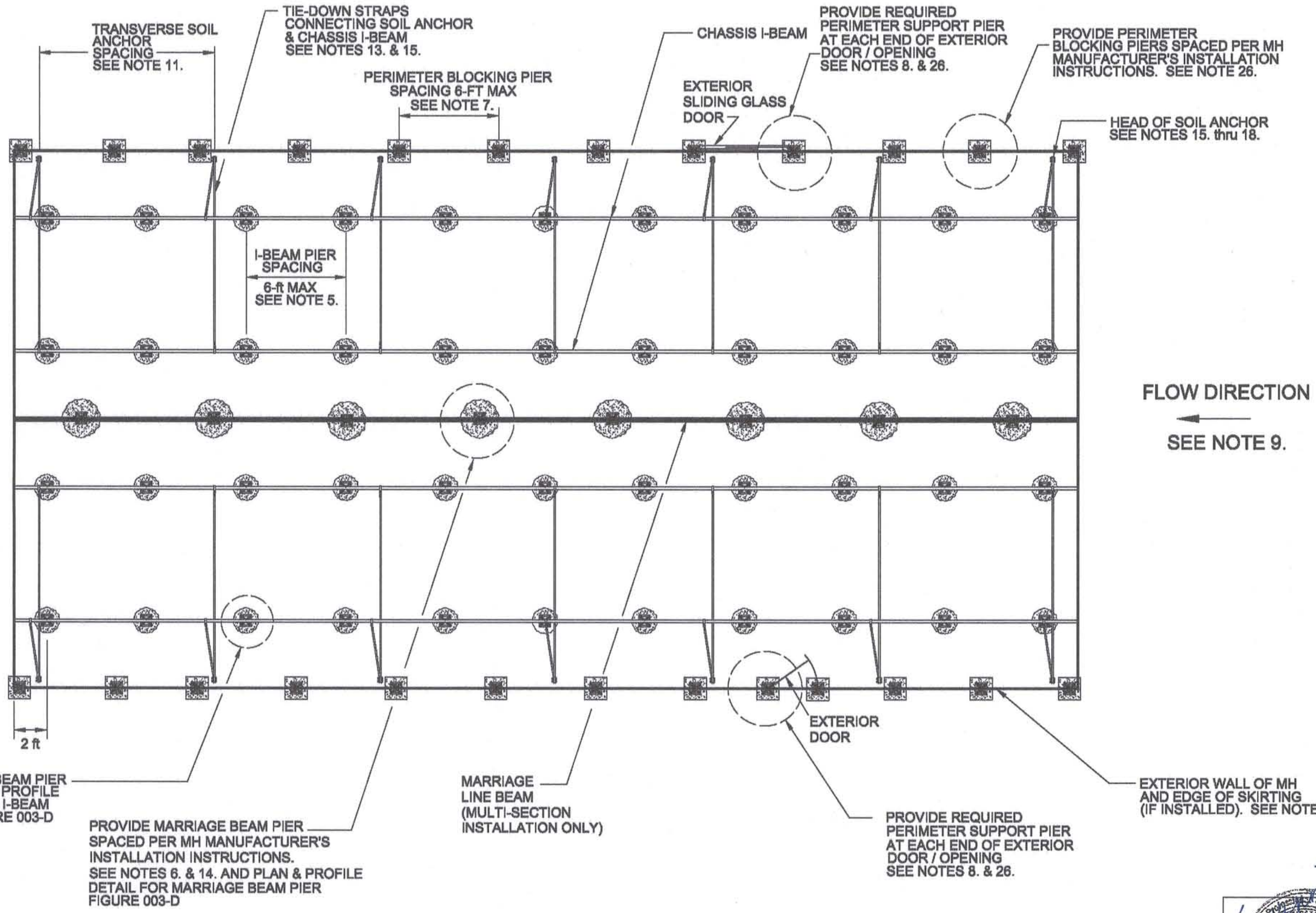

FOUNDATION PLAN

MULTI-SECTION INSTALLATION SHOWN; SINGLE-WIDE INSTALLATION SIMILAR
(LONGITUDINAL ANCHORS & TIE-DOWN STRAPS NOT SHOWN FOR CLARITY; SEE NOTE 11.)
(TRANSVERSE TIE-DOWN STRAPS SHOWN OFFSET FOR CLARITY)

FOR NOTES, SEE SHEET TITLED: NOTES for FIGURES 003-C & -D

Pima County Regional FLOOD CONTROL DISTRICT

Registered Professional Engineer (Civil) CERTIFICATE NO. 15510 SUZANNE J. SHIELDS DATE SIGNED 11/4/2010 ARIZONA U.S.A.
EXP. 6/30/2012

THE SEAL of PIMA COUNTY ARIZONA

FIGURE 003-C
MH ON CONCRETE PIERS CAST TO GRADE & SUPPORTING JACK STANDS

SCALE: NONE | DRAWN BY: ads | DATE: NOV 2010

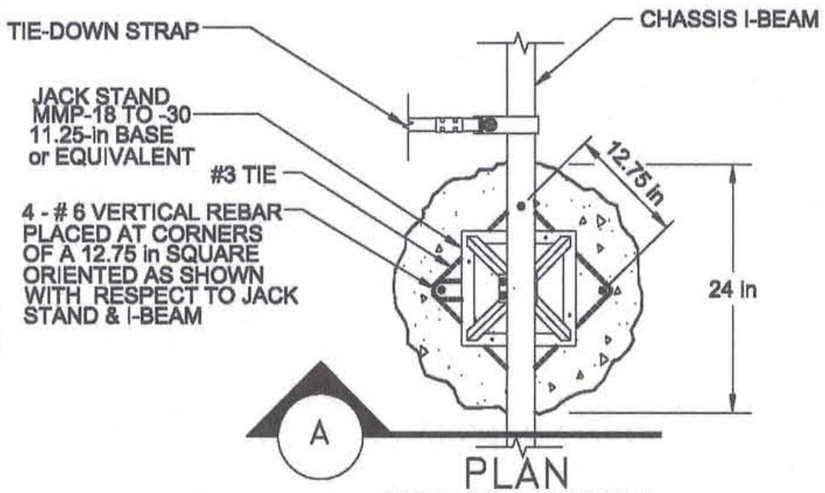

PLAN
REBAR CAPS not SHOWN

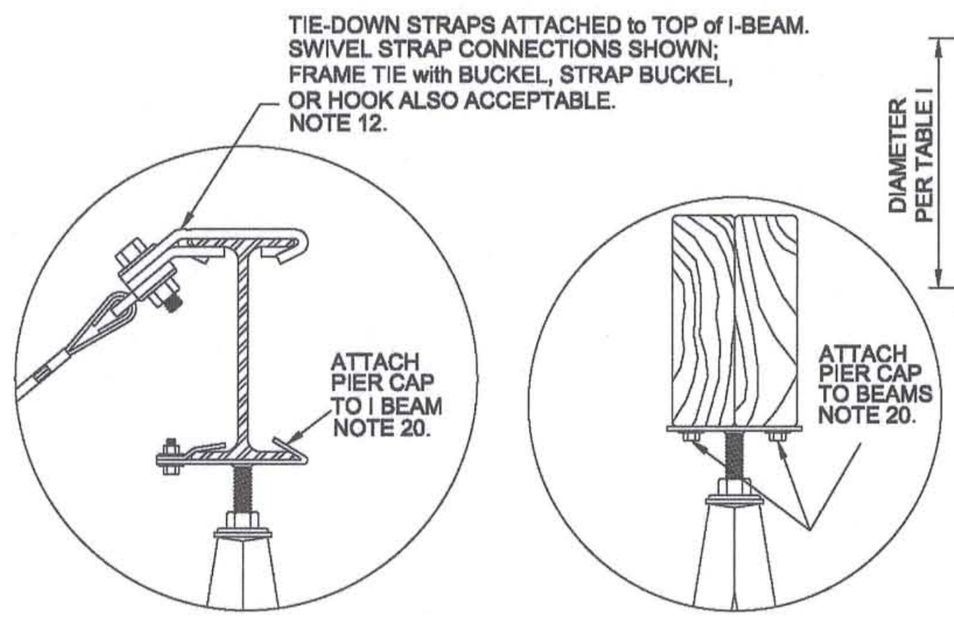

DETAIL 1 DETAIL 2

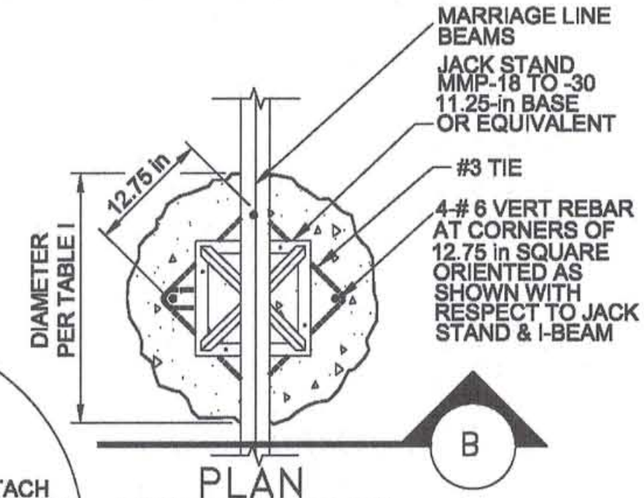

PLAN
REBAR CAPS not SHOWN

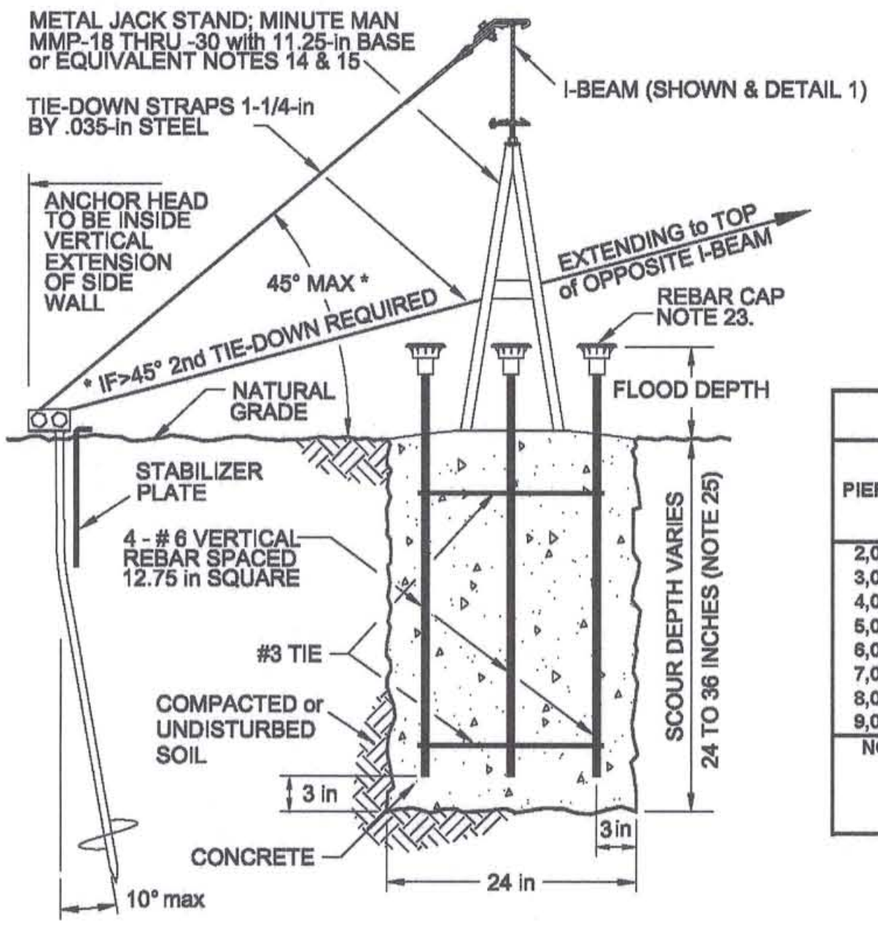

SOIL ANCHOR installed to FULL DEPTH & PRETENSIONED (shown).
36" X 3/4" rod / 1-6" helix & 1-4" helix, OR
48" X 3/4" rod / 1-6" helix, EITHER WITH
11" X 17" STABILIZER PLATE
SEE NOTES 15. thru 18.

A SECTION
NOT TO SCALE:

CHASSIS I-BEAM PIER
shown with SOIL ANCHOR & TIE-DOWN STRAPS

TABLE I.

DIAMETER (in) OF MARRIAGE BEAM PIER

PIER LOAD	ALLOWABLE SOIL BEARING CAPACITY											
	1500 psf			2000 psf			3000 psf			4000 psf		
	scour depth (in)			scour depth (in)			scour depth (in)			scour depth (in)		
	24	30	36	24	30	36	24	30	36	24	30	36
2,000 lbs												
3,000 lbs												
4,000 lbs												
5,000 lbs												
6,000 lbs												
7,000 lbs												
8,000 lbs												
9,000 lbs												

NOTES: SEE DRAWING NOTES FOR MATERIALS, CONSTRUCTION

= 24-inch diameter circular pier
= 30-inch diameter circular pier
= 36-inch diameter circular pier
= Additional Analysis Required

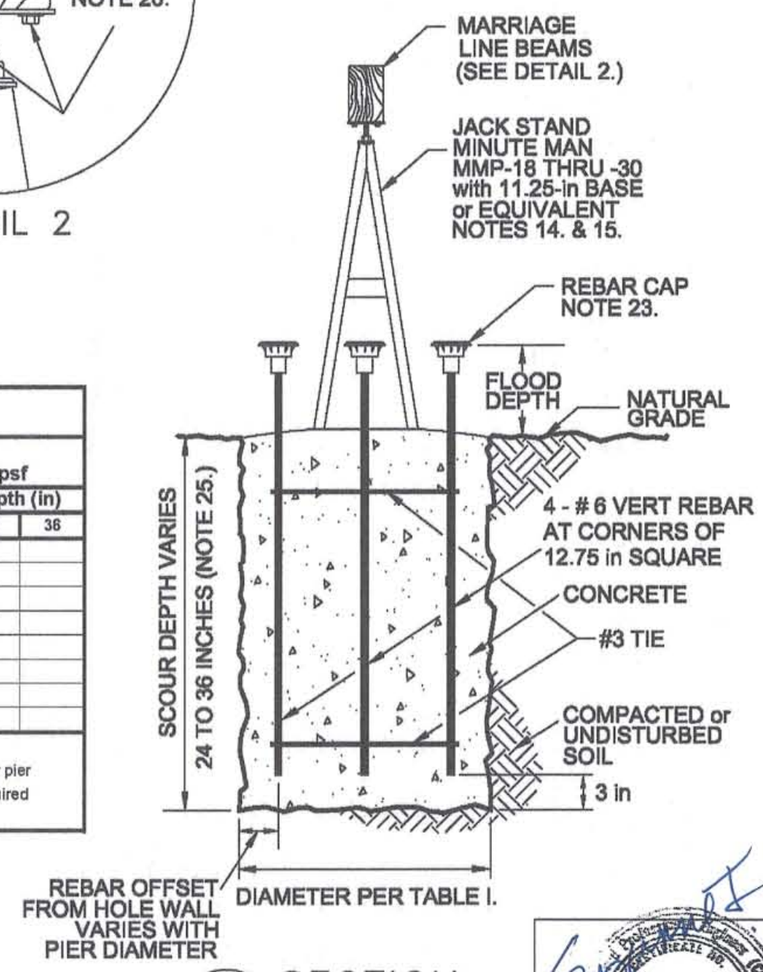

B SECTION
NOT TO SCALE:

MARRIAGE BEAM PIER

15510 SUZANNE J. SHIELDS ARIZONA U.S.A.
EXP. 6/30/2013

Pima County Regional FLOOD CONTROL DISTRICT

FOR NOTES, SEE SHEET TITLED: **NOTES for FIGURES 003-C & -D**

FIGURE 003-D
MH ON CONCRETE PIERS CAST TO GRADE & SUPPORTING JACK STANDS

SCALE: NONE DRAWN BY: ads DATE: NOV 2010

THE SEAL of PIMA COUNTY ARIZONA