ARCHITECTURE

ENGINEERING

CONSTRUCTION MANAGEMENT

STRUCTURAL CALCULATIONS

FOR

Multi-Box Culvert

PREPARED FOR

Port of Tucson
6964 E. Century Park Drive
Tucson, Arizona 85756

February 2015
March 2, 2015 – Revision 1

M3-PN150004

Registered Professional Engineer (Civil)
CERTIFICATE NO.
38237
PETER AUGUSTUS
ERATH
Date Signed 3/2/15
ARIZONA, U.S.A.
Exp 12/31/16

☒ **Tucson Office**
2051 W. Sunset Road, Suite 101
Tucson, AZ 85704
Phone: (520) 293-1488
Fax: (520) 293-8349
e-mail: m3@m3eng.com

☐ **Chandler Office**
2175 W. Pecos Road, Suite 3
Chandler, AZ 85224
Phone: (480) 753-3607
Fax: (480) 753-3617
e-mail: m3phx@m3eng.com

☐ **Charlotte Office**
11111 Carmel Commons Blvd., Suite 200
Charlotte, NC 28226
Phone: (704) 973-0500
Fax: (704) 973-0528
e-mail: m3carolina@m3eng.com

☐ **Hermosillo Office**
Boulevard Enrique Mazón López 1001
Carretera Internacional a Nogales KM 6.5
Hermosillo, Sonora C.P.83304 Mexico
Phone: (52-662) 109-1500
Fax: (52-662) 109-1504
email: m3mexicana@m3mexicana.com.mx

☐ **Buenos Aires Office**
Suipacha 1067, Piso 9
C.A.B.A. CP. C1008AAU
Phone: (54)(11) 4312-0303
Fax: (54)(11) 4311-1448
email: m3arg@m3arg.com.ar

ARCHITECTURE

ENGINEERING

CONSTRUCTION MANAGEMENT

PROJECT NO. 150004

PROJECT Port of Tucson Box Culvert

SHEET NO. _____ **OF** _____ **BY** JDM

DRAWING NO. SK-000 and SK-001

SUBJECT: Table of Contents **DATE:** Feb. 2015

Description	Pages
Description and Criteria	1
Design Loads	2
Boundary Conditions	3
Shear	6
Moment	9
Bearing Pressure	14
Rebar Details	15
Risa Printouts	17
Member Labels	17
Load Combinations	18
Basic Load Cases	24
Joint Boundary Conditions	30
Envelope Member Section Forces	31
Drawings SK-000, SK-001, and SK-002 for Reference	35

Registered Professional Engineer (Civil)
CERTIFICATE NO.
36237
PETER AUGUSTUS
ERATH
Date Signed 3/2/15
ARIZONA, U.S.A.

Exp 12/31/16

ARCHITECTURE
ENGINEERING
CONSTRUCTION MANAGEMENT

PROJECT NO. 150004
PROJECT Port of Tucson Box Culvert
SHEET NO. 1 **OF** _____ **BY** JDM
DRAWING NO. SK-001

SUBJECT: Description + Design Criteria **DATE:** Feb. 2015

Description

45 feet of railway width is to be added at the Port of Tucson. A new track and maintenance road will cross an existing waterway by extending an existing mult-box culvert. Drilled and epoxied rebar will tie the new and old sections together.

Design Criteria

Code

International Building Code, 2012
AREMA Manual for Railway Engineering, 2014

Criteria, Specifications, and Materials

Assumed Soil Bearing Capacity = q_a = 1500 psf
Concrete: 4000 psi, 28 days
Rebar: ASTM A615 Grade 60

Revision 1 Description

Shear Calculation was revised to comply with AREMA provisions on page 6. Pages 15 and 16 were added to show developement lengths for hooks and splices.

ARCHITECTURE
ENGINEERING
CONSTRUCTION MANAGEMENT

PROJECT NO. 150004
PROJECT Port of Tucson Box Culvert
SHEET NO. 2 **OF** _____ **BY** JDM
DRAWING NO. SK-001

SUBJECT: Design Loads **DATE:** Feb. 2015

Design Loads considered for box culverts — AREMA 16.4.1

- dead load (DL)
- live load (LL)
- impact load (I) where TL = DL + LL + I

– Total Load (TL) on Roof — AREMA Figure 8-16-1

TL = 3 ksf (unfactored) assuming H = 18"

– Earth Pressure Load (E)

$P_{e,min} = k_{e,min} W_e H' = 0.33 \times 120\,pcf \times 3.25' = \underline{128\,psf}$

$P_{e,max} = k_{e,max} W_e H' = 1.00 \times 120\,pcf \times 3.25' = \underline{390\,psf}$

$P_s = k_s W_e \left(H' - \frac{80000^{\#}}{5' \times W_e \times L_d}\right) = 0.33 \times 120_{pcf} \left[3.25' + \frac{80000^{\#}}{5' \times 120_{pcf} \times (8.5' + \frac{1}{2} \times 1.5')}\right]$

$= 0.33 \times 120_{pcf} [17.7'] = \underline{700\,psf}$

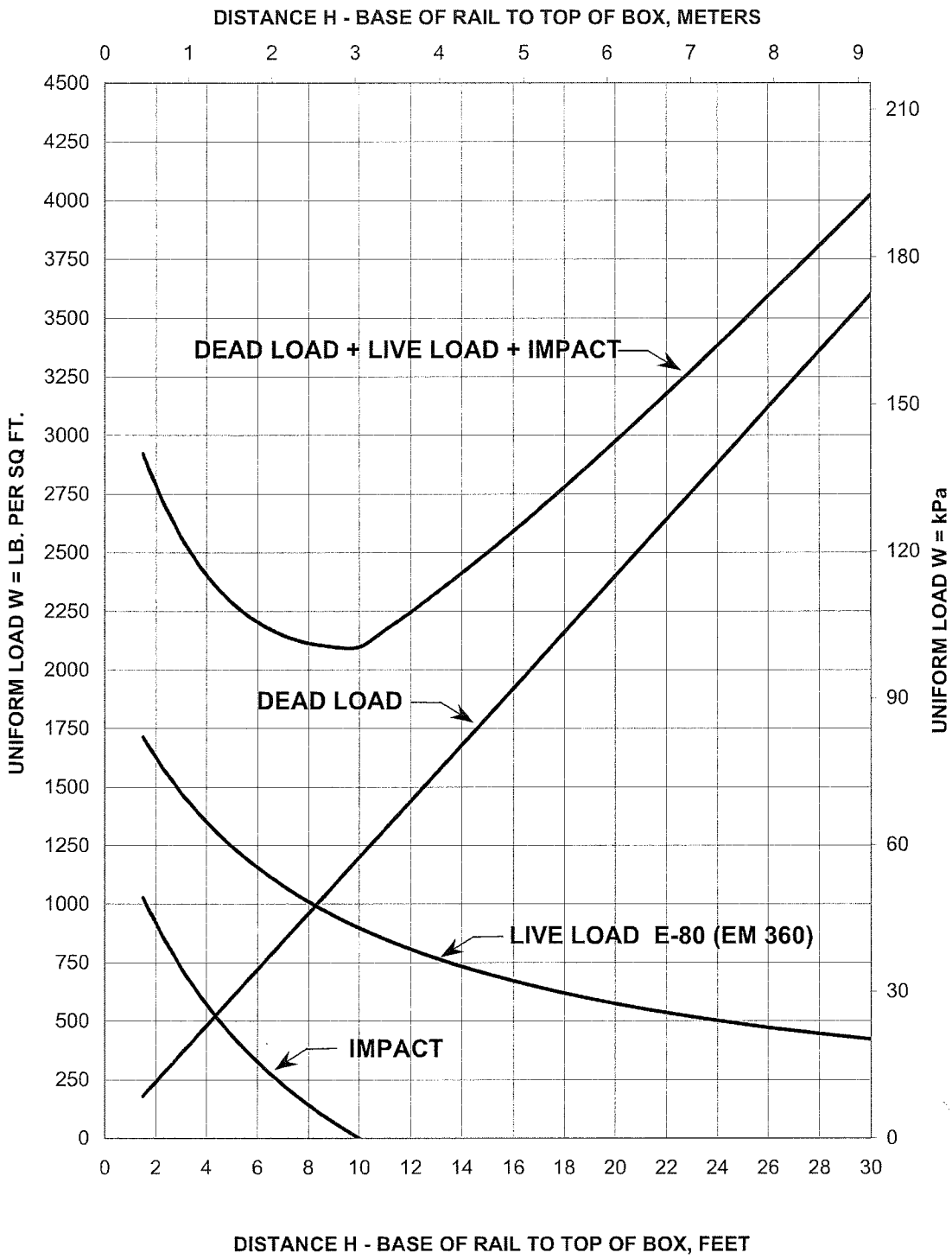

Figure 8-16-1. Uniformly Distributed Load to Top of Box

© 2014, American Railway Engineering and Maintenance-of-Way Association

ARCHITECTURE
ENGINEERING
CONSTRUCTION MANAGEMENT

PROJECT NO. 150004
PROJECT Port of Tucson Box Culvert
SHEET NO. 4 OF ____ BY JDM
DRAWING NO. SK-001

SUBJECT: Boundary Conditions DATE: Feb. 2015

Boundary Conditions

- assume soil is silty gravels, poorly graded gravel - sand - silt
- range of subgrade modulus = 100 - 400 lb/in³ NAVFAC DM7 table 3-1
- Use lower end of range to produce higher design moment in slab

- find soil spring stiffness (k)

$k = 100 \frac{lb}{in^3} \times A_t$

A_t = tributary area of spring in Risa model = 24" x 12"

$k = 100 \frac{lb}{in^3} \times 24" \times 12" \times \frac{1k}{1000 lb} = 28.8 \ k/in$

$k = 28.8 \ k/in$

5

Table 3-1. Typical Engineering Properties of Compacted Materials

Group Symbol	Soil Type	Range of Maximum Dry Unit Weight, pcf	Range of Optimum Water, Content Percent	Typical Value of Compression: At 2.5 ksf (20 psi) Percent of Original Height	Typical Value of Compression: At 7.2 ksf (50 psi) Percent of Original Height	Typical Strength Characteristics: Cohesion (As Compacted) psf	Typical Strength Characteristics: Cohesion (Saturated) psf	Typical Strength Characteristics: ϕ (Effective Stress Envelope) deg	Typical Coefficient of Permeability ft/min	Range of CBR Values	Range of Subgrade Modulus k lb/cu in.	K/cu ft.
GW	Well graded clean gravels, gravel-sand mixtures	125-135	11-8	0.3	0.6	0	0	>38	5×10^{-2}	40-80	300-500	x 1.73 = 518 - 865
GP	Poorly graded clean gravels, gravel-sand mix	115-125	14-11	0.4	0.9	0	0	>37	10^{-1}	30-60	250-400	432 - 691
GM	Silty gravels, poorly graded gravel-sand-silt	120-135	12-8	0.5	1.1	.....	.....	>34	$>10^{-6}$	20-60	100-400	173 - 691
GC	Clayey gravels, poorly graded gravel-sand-clay	115-130	14-9	0.7	1.6	.....	.....	>31	$>10^{-7}$	20-40	100-300	
SW	Well graded clean sands, gravelly sands	110-130	16-9	0.6	1.2	0	0	38	$>10^{-3}$	20-40	200-300	
SP	Poorly graded clean sands, sand-gravel mix	100-120	21-12	0.8	1.4	0	0	37	$>10^{-3}$	10-40	200-300	
SM	Silty sands, poorly graded sand-silt mix	110-125	16-11	0.8	1.6	1050	420	34	5×10^{-5}	10-40	100-300	
SM-SC	Sand-silt clay mix with slightly plastic fines	110-130	15-11	0.8	1.4	1050	300	33	2×10^{-6}	.....		
SC	Clayey sands, poorly graded sand-clay mix	105-125	19-11	1.1	2.2	1550	230	31	5×10^{-7}	5-20	100-300	
ML	Inorganic silts and clayey silts	95-120	24-12	0.9	1.7	1400	190	32	10^{-5}	15 or less	100-200	
ML-CL	Mixture of inorganic silt and clay	100-120	22-12	1.0	2.2	1350	460	32	5×10^{-7}	.....	100-200	
CL	Inorganic clays of low to med. plasticity	95-120	24-12	1.3	2.5	1800	270	28	10^{-7}	15 or less	50-200	
OL	Organic silts and silt-clays, low plasticity	80-100	33-21	.....	.....	.....	.....	.....	.....	5 or less	50-100	
MH	Inorganic clayey silts, elastic silts	75-95	40-24	2.0	3.8	1500	420	25	5×10^{-7}	10 or less	50-100	87 kcf -
CH	Inorganic clays of high plasticity	80-105	36-19	2.6	3.9	2150	230	19	10^{-7}	15 or less	50-150	
OH	Organic clays and silty clays	75-100	45-21	.....	.....	.....	.....	.....	.....	5 or less	25-100	

$$\frac{\#}{in^3} \cdot \left(\frac{12\,in}{ft}\right)^3 \cdot \frac{kip}{1000\#} = 1.73 \frac{k/ft^3}{\#/in^3}$$

Notes
1. All properties are for condition of "standard Proctor" maximum density. except values of k and CBH which are for CE55 ,maximum density.
2. Typical strength characteristics are for effective strength envelopes and are obtained from ISBR data.
3. Compression values are for vertical loading with complete lateral confinement.
4. (>) indicates that typical property is greater than the value shown. ( ) indicates insufficient data available for an estimate.

(NAVFAC DM-7)

SUBJECT: Shear per AREMA '14 DATE: Feb. 2015

Shear

- Maximum shear is in member M8 at 46.3k, L.C5.
- Location of V_u per AREMA 2.35.1.b

Assume 12" haunch: Satisfies 6" minimum per 16.5.3.d.

Distance of V_u from ℄ of wall $= \frac{1}{2} \times t_{wall} + haunch + d$
$= 12'' + 12'' + 15'' = 39'' = 3.25'$

$12' - 3.25' = \underline{8.75'}$

- $V_u = \underline{22664\ lb}$, $M_u = 15.8\ k\text{-}ft \times 1000\ \frac{lb}{k} \times 12''/' = \underline{189600\ lb\text{-}in}$

$V_u d / M_u = 22664 \times 16 / 189600 = \underline{1.91}$

$\phi = 0.85$ ZD.30.2.b.

$v_u = V_u / (\phi b_w d) = 22664 / (0.85 \times 12'' \times 16'')$ EQ. 2-45
$= 139\ psi$

$\underline{v_u = 139 psi}$

- $v_c = 1.9\sqrt{f'_c} + 2500 \rho_w \frac{V_u d}{M_u} \leq 3.5\sqrt{f'_c}$ EQ. 2-46

Set $\frac{V_u d}{M_u} \leq 1$

$\rho_w = A_s / b_w d = (0.79 in^2 \times 3 bars / 12'') / 12'' \times 16'' = 0.0123$

$V_c = 1.9\sqrt{4000} + 2500(0.0123)(1.0) \leq 3.5\sqrt{4000}$
$= 151\ psi \leq 221\ psi$

$V_c = 151 psi > v_u = 139 psi$ OK

Use 18" minimum slab thickness with 12" haunch

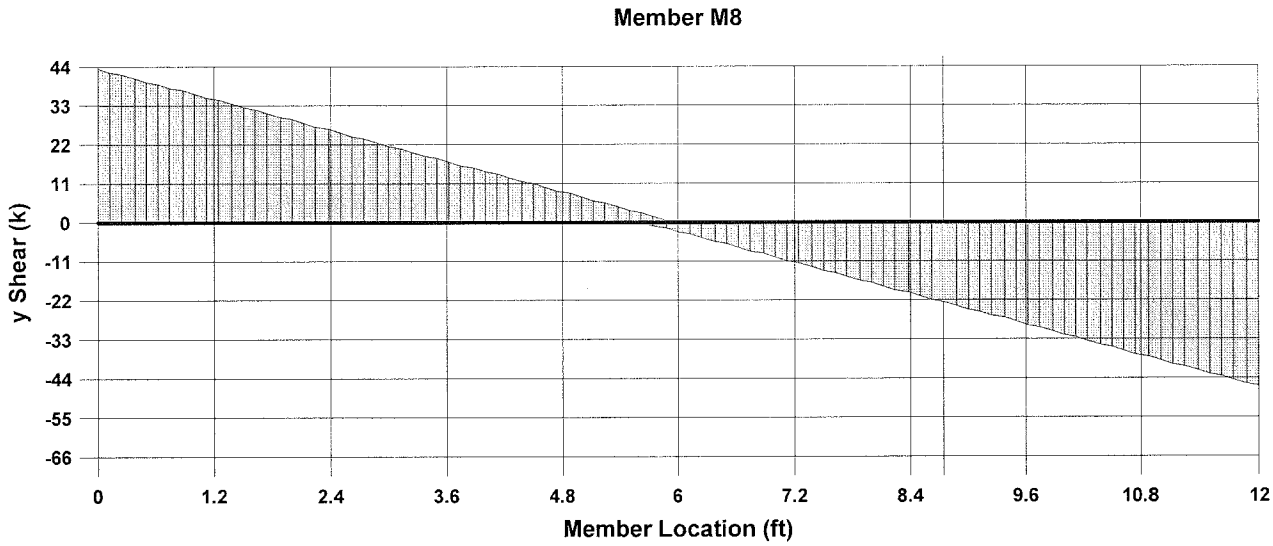

Line Values:

Loc:	**8.75 ft**
Vu(+):	**0 k**
Vu(-):	**-22.664 k**

8

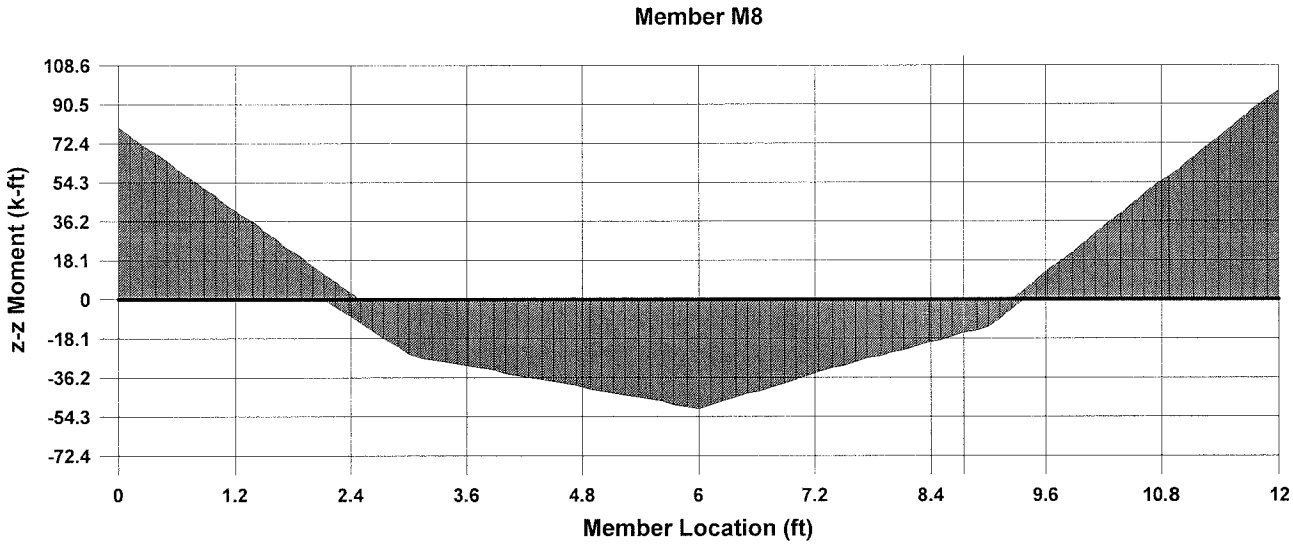

Line Values:

Loc:	8.75 ft
Mu(+):	0 k-ft
Mu(-):	-15.805 k-ft

SUBJECT: Moment DATE: Feb. 2015

Moment in Roof

$M_{u\,max} = 96.3$ k-ft, M8, LC5 Tension in top
$M_{u\,min} = -50.6$ k-ft, M8, LC5, Tension in bottom
see attached Risa sheets

- Design top rebar

$h = 18''$, $d = 15''$, $f'_c = 4000$ psi, $b = 12''$, $\beta_1 = 0.85$

- try #8 @ 6" O.C.

$A_s = 0.79\ in^2 \times \frac{12''}{6''} = 1.58\ in^2$ per ft width
$\rho = A_s/bh = 1.58\ in^2/12'' \times 18'' = 0.0073$
$\rho_{min} = 0.0033$
$\rho_{max} = 0.0181$ $\rho_{min} < \rho < \rho_{max}$ ok

$a = \frac{A_s f_y}{0.85 f'_c b} = \frac{1.58 in^2 \times 60\ ksi}{0.85 \times 4\ ksi \times 12''} = 2.32''$
$c = a/\beta_1 = 2.32''/0.85 = 2.73''$
$\epsilon_t = \frac{d-c}{c}(0.003) = \frac{15'' - 2.73''}{2.73''}(0.003) = 0.013$

$\epsilon_t > 0.005$ ∴ tension controls

$M_n = A_s f_y (d - \frac{a}{2}) = 1.58 in^2 \times 60\ ksi\,(15'' - \frac{2.32}{2}) = 1312$ k-in
$= 109$ k-ft

$\phi M_n = 0.9 \times 109$ k-ft $= 98$ k-ft $> M_u = 96$ k-ft
ok

Use #8 @ 6" O.C.
for top bars in roof
in longitudinal direction

SUBJECT: Moment DATE: Feb 2015

Moment in Roof (cont.)

- Design Bottom Rebar

$M_{u\,min} = -50.6$ k-ft

- try #8 @ 12" O.C.

$A_s = 0.79 in^2$ per ft width

$\rho = A_s / bh = 0.79" / 12 \times 18 = 0.0037$ $\rho_{min} < \rho < \rho_{max}$ ok
0.0033 0.0181

$a = \frac{A_s f_y}{0.85 f'_c b} = 2.32" / 2 = 1.16"$

$c = 1.16 / 0.85 = 1.36"$

$\epsilon_t = \frac{d-c}{c} \times 0.003 = \frac{15 - 1.36"}{1.36"} \times 0.003 = 0.03 > 0.005$
tension controlled

$M_n = A_s f_y (d - \frac{a}{2}) = 0.79 in^2 \times 60 ksi (15" - \frac{1.16"}{2}) = 683.5$ k-in
$= 57.0$ k-ft

$\phi M_n = 0.9 \times 57.0 = 51.3$ k-ft > 50.6 k-ft ok

Use #8 @ 12" O.C.
for bottom bars in roof
in longitudinal direction

SUBJECT: Moment DATE: Feb. 2015

Moment in Walls

$M_{u\,max} = 88.9$ k-ft, N3, LL3

- Try #8 @ 6" O.C.

$h = 24"$
$d = 21"$
$b = 12"$
$f'_c = 4000$ psi
$\beta_1 = 0.85$
$A_s = 0.79\ in^2 \times \frac{12"}{6"} = 1.58\ in^2$
$\rho = A_s / bh = 1.58 / 12 \times 24 = 0.0055$ $\rho_{min} = 0.00333 < \rho < \rho_{max} = 0.021$

ok

$a = \frac{A_s f_y}{0.85 f'_c b} = \frac{1.58 \times 60}{0.85 \times 4 \times 12} = 2.32"$

$c = a/\beta_1 = 2.32"/0.85 = 2.73"$

$\epsilon_t = \frac{d-c}{c} \times 0.003 = \frac{21 - 2.73}{2.73} \times 0.003 = 0.02 > 0.005$

tension controls

$M_n = A_s f_y (d - \frac{a}{2}) = 1.58 \times 60 (21" - \frac{2.32"}{2}) = 1880$ k-in
$= 156$ k-ft

$\phi M_n = 0.9 \times 156 = 141$ k-ft > 88.9

ok

Use #8 @ 6" OC. verticals in walls

SUBJECT: Moment DATE: Feb. 2015

Moment in Slab on Grade

$M_{u\,max}$ = 45.4 k-ft, M19, LC4 Tension in top
$M_{u\,min}$ = −92.5 k-ft, M19, LC4 Tension in bottom

– Design Top Rebar

$h = 18''$
$d = 15''$
$b = 12''$
$f'_c = 4000$ psi
$\beta_1 = 0.85$

– try #8 @ 12" O.C.

$A_s = 0.79 in^2 \times \frac{12''}{12''} = 0.79 in^2$ per ft.

$\rho = A_s/bd = 0.79/12 \times 18 = 0.0037 > \rho_{min}$ ok

$a = \frac{A_s f_y}{0.85 f'_c b} = \frac{0.79 \times 60}{0.85 \times 4 \times 12} = 1.16''$

Per root calc., slab is tension controled

$M_n = A_s f_y (d - \frac{a}{2}) = 0.79 \times 60 (15'' - \frac{1.16''}{2}) = 684$ k-in = 57 k-ft

$\phi M_n = 0.9 \times 57 = 51$ k-ft > 45 ok

Use #8 @ 12" O.C. for top bars in slab in the longitudinal direction

Moment in Slab on Grade (cont.)

- Design Bottom Bars

try #8 @ 6" O.C.

$A_s = 0.79 \text{ in}^2 \times 12/6 = 1.58 \text{ in}^2 \text{ per ft}$

$\rho = A_s/bh = 1.58/12 \times 18 = 0.0073$ ok

$a = \frac{A_s f_y}{0.85 f'_c b} = \frac{1.58 \times 60}{0.85 \times 4 \times 12} = 2.32''$

tension controlled by comparison to roof.

$M_n = A_s f_y (d - \frac{a}{2}) = 1.58 \times 60 (15 - \frac{2.32}{2}) = 1312 \text{ k-in}$
$= 109 \text{ k-ft}$

$\phi M_n = 0.9 \times 109 = 98 \text{ k-ft} > 93$ ok

Use #8@6" O.C. for bottom bars of slab in the longitudinal direction

Temperature and Shrinkage steel

$\rho_{min\ slab} = 0.0018$
$\rho_{min\ wall} = 0.0025$

- Slab

$\rho A_g = 0.0018 \times 12 \times 18 = 0.39 \text{ in}^2/\text{ft}$

Use #6@12" O.C.

- Walls

$\rho A_g = 0.0025 \times 12 \times 24 = 0.72 \text{ in}^2/\text{ft}$

Use #6@12" O.C.

ARCHITECTURE
ENGINEERING
CONSTRUCTION MANAGEMENT

PROJECT NO. 150204
PROJECT Port of Tucson Box Culvert
SHEET NO. 14 OF _____ BY JLM
DRAWING NO. SK-001

SUBJECT: Bearing Pressure DATE: Feb. 2015

Verify Bearing Pressure is Less than 1500psf

Tributary width for TL = Tie width = 8.5'
Tributary length for TL = length of culvert = 74'
TL = 3ksf × 8.5' × 74' = 1887 k

Tributary area of new culvert = 74' × 45' = 3375 ft²

- Bearing pressure = TL / $A_{T,culvert}$ = 1887k / 3375 ft²

= 0.560 ksf < 1.5 ksf
ok

ARCHITECTURE
ENGINEERING
CONSTRUCTION MANAGEMENT

PROJECT NO. 150004
PROJECT Port of Tucson Box Culvert
SHEET NO. 15 **OF** _____ **BY** JDM
DRAWING NO. SK-000 & SK-001

SUBJECT: Rebar Details **DATE:** Feb-2015

Rebar Details

- hook length 90° #8 $= 12 d_b + \frac{1}{2} \times 8 d_b = 16 d_b = \underline{16''}$ 2.4.1.b & 2.4.2.a.

$l_{dh\,min} = \max\left\{ \begin{matrix} 6'' \\ 8 d_b = 8'' \end{matrix} \right\} = \underline{8''}$

$l_{dh} = 1200 d_b / \sqrt{f'_c} = 1200(1'')/\sqrt{4000} = \underline{19''}$ 2.17.b.

Applicable factors: 2.17.c.

(2) Cover $\underline{0.7}$

(4) Excess steel

$$\frac{A_{s\,req.}}{A_{s\,prov.}} = \frac{M_u / 4.05 d}{2 \times 0.79} = \frac{89/4.05(21)}{1.58} = \underline{0.66}$$

$l_{dh} = 19'' \times 0.7 \times 0.66 = \underline{8.8''} > 8''$ ok

$\underline{\text{Use } l_{dh} = 12''}$

SUBJECT: Rebar Details DATE:

Rebar Details (cont.)

- lap splice

- Basic l_d of #8 — 2.14.a.

$$l_d = \frac{0.04 A_b f_y}{\sqrt{f_c'}} \geq 0.0004 d_b f_y$$ — Table 8-2-8

$$= \frac{0.04(0.79)(60000)}{\sqrt{4000}} \geq 0.0004(1")(60000)$$

$$= 30" \geq 24"$$
$$= 30"$$

- Modification factors

1.4 for top bars — 2.14.b.
1.3 for lap class B — 2.22.3

- Basic l_d for #6

$$l_d = \frac{0.04 A_b f_y}{\sqrt{f_c'}} \geq 0.0004 d_b f_y$$

$$= \frac{0.04(0.44)(60000)}{\sqrt{4000}} \geq 0.0004(0.75)(60000)$$

$$= 17" \geq 18"$$ Use 18"

Splice Length (Staggered)		
bar size	Top Bars	Other Bars
#6	33"	24"
#8	55"	39"

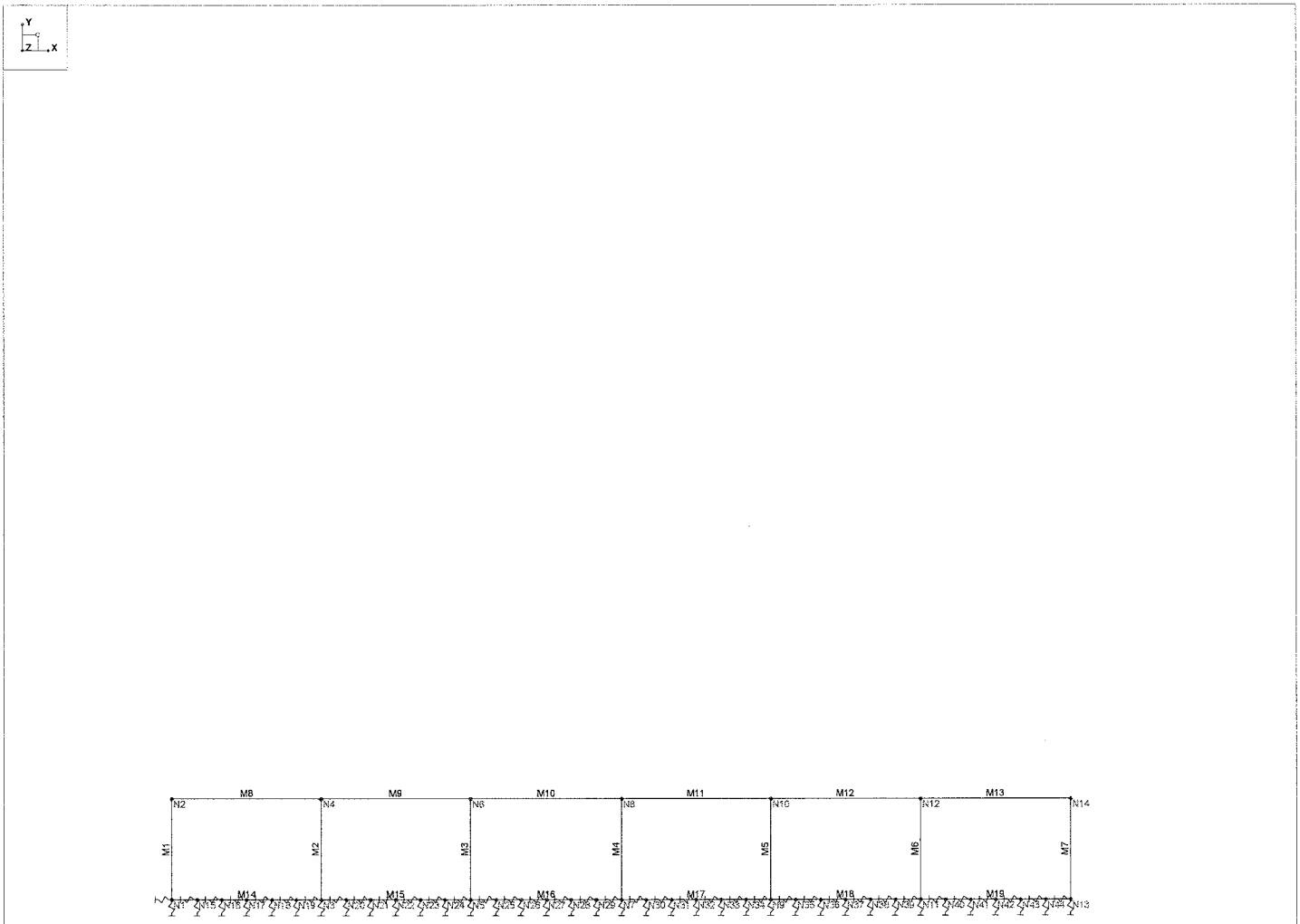

Results for LC 3, DL+LL (Culvert Partial TL, Max E)

M3 Engineering	Port of Tucson Multi-Box Culvert	SK - 1
JDM		Feb 10, 2015 at 9:54 AM
150004		150004 Box Culvert.r3d

Load Combinations

	Description	Solve	P...	S...	B...	Fa...	B...	Fa...	B...	Fa...	B...	Fa...	B...	Fa...	B...	Fa...	B...	Fa...	B...	Fa...
1	DL		Y		1	1.4	4	1.4												
2	DL+LL (Culvert Full TL, Max E)	Yes	Y		1	1.4	5	2.33	7	1.4										
3	DL+LL (Culvert Partial TL, Max E)	Yes	Y		1	1.4	8	2.33	7	1.4										
4	DL+LL (Culvert Full TL, Min E)	Yes	Y		1	1.4	5	2.33	6	1.4										
5	DL+LL (Culvert Partial TL, Min E)	Yes	Y		1	1.4	8	2.33	6	1.4										

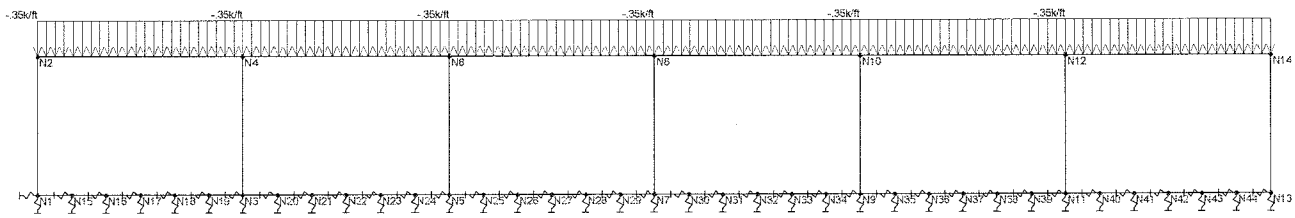

Loads: LC 1, DL
Results for LC 2, DL+LL (Culvert Full TL, Max E)

M3 Engineering	Port of Tucson Multi-Box Culvert	SK - 2
JDM		Feb 12, 2015 at 10:12 AM
150004		150004 Box Culvert.r3d

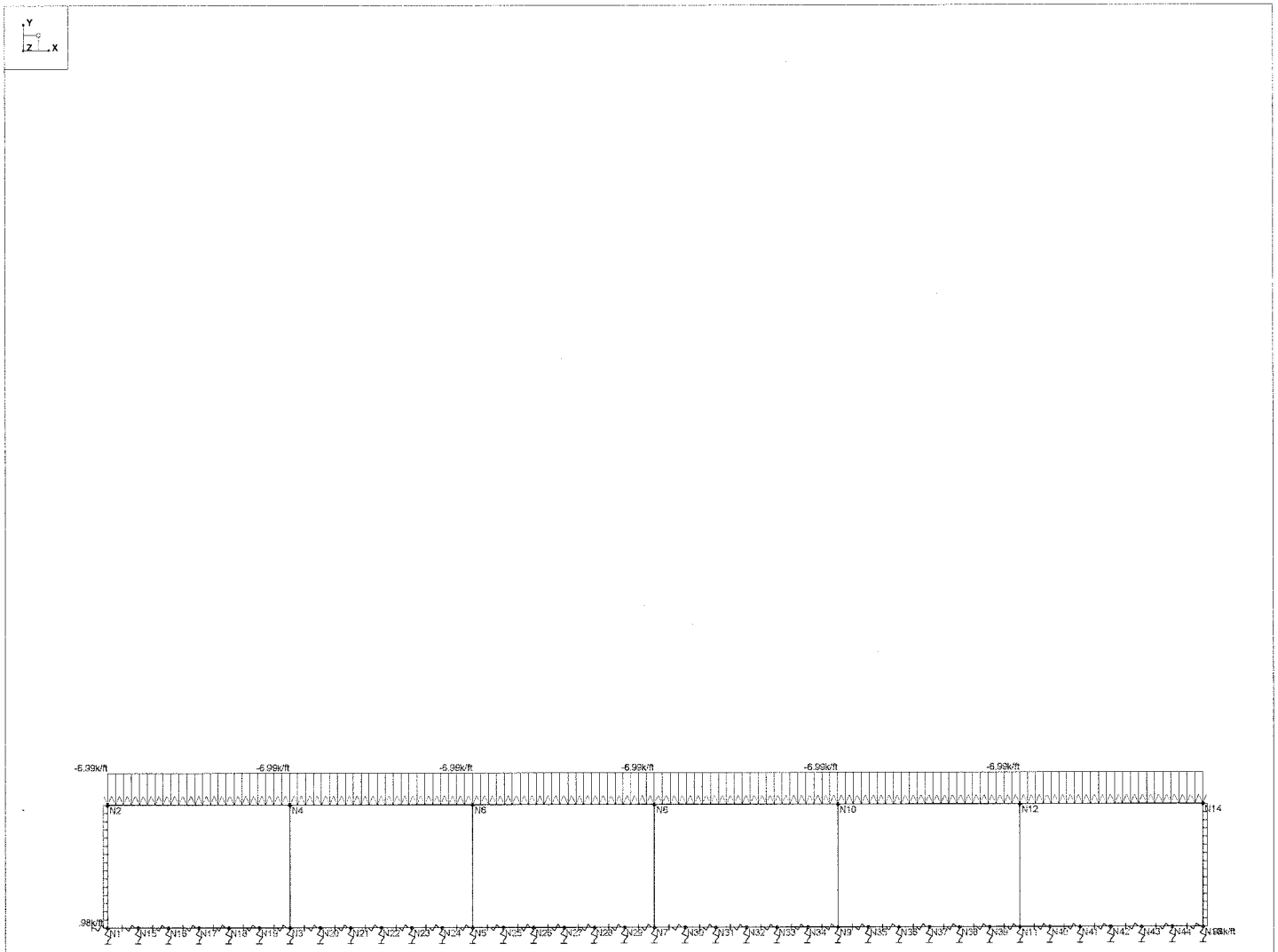

Loads: LC 2, DL+LL (Culvert Full TL, Max E)
Results for LC 2, DL+LL (Culvert Full TL, Max E)

M3 Engineering	Port of Tucson Multi-Box Culvert	SK - 3
JDM		Feb 12, 2015 at 10:12 AM
150004		150004 Box Culvert.r3d

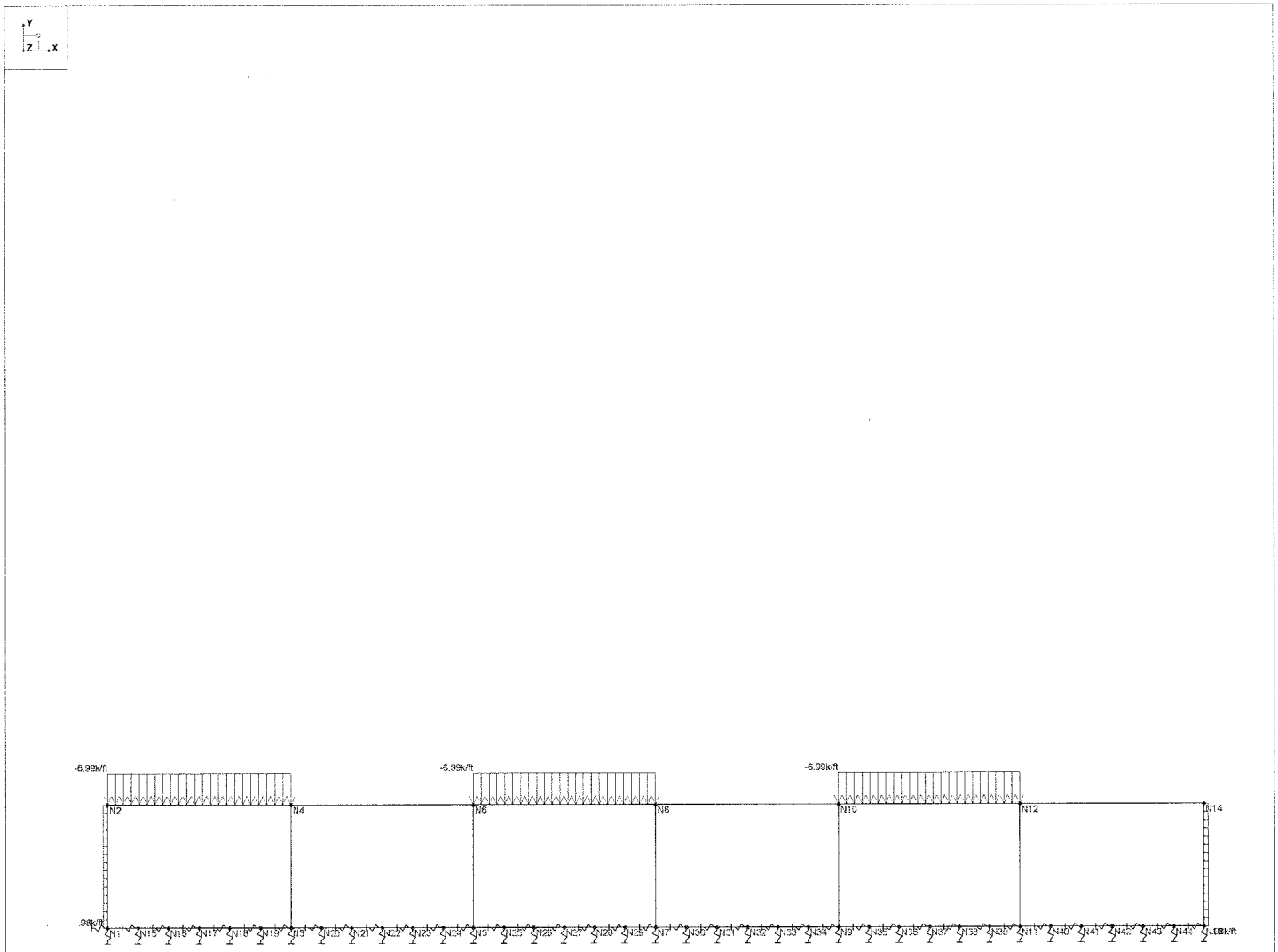

Loads: LC 3, DL+LL (Culvert Partial TL, Max E)
Results for LC 2, DL+LL (Culvert Full TL, Max E)

M3 Engineering	Port of Tucson Multi-Box Culvert	SK - 4
JDM		Feb 12, 2015 at 10:12 AM
150004		150004 Box Culvert.r3d

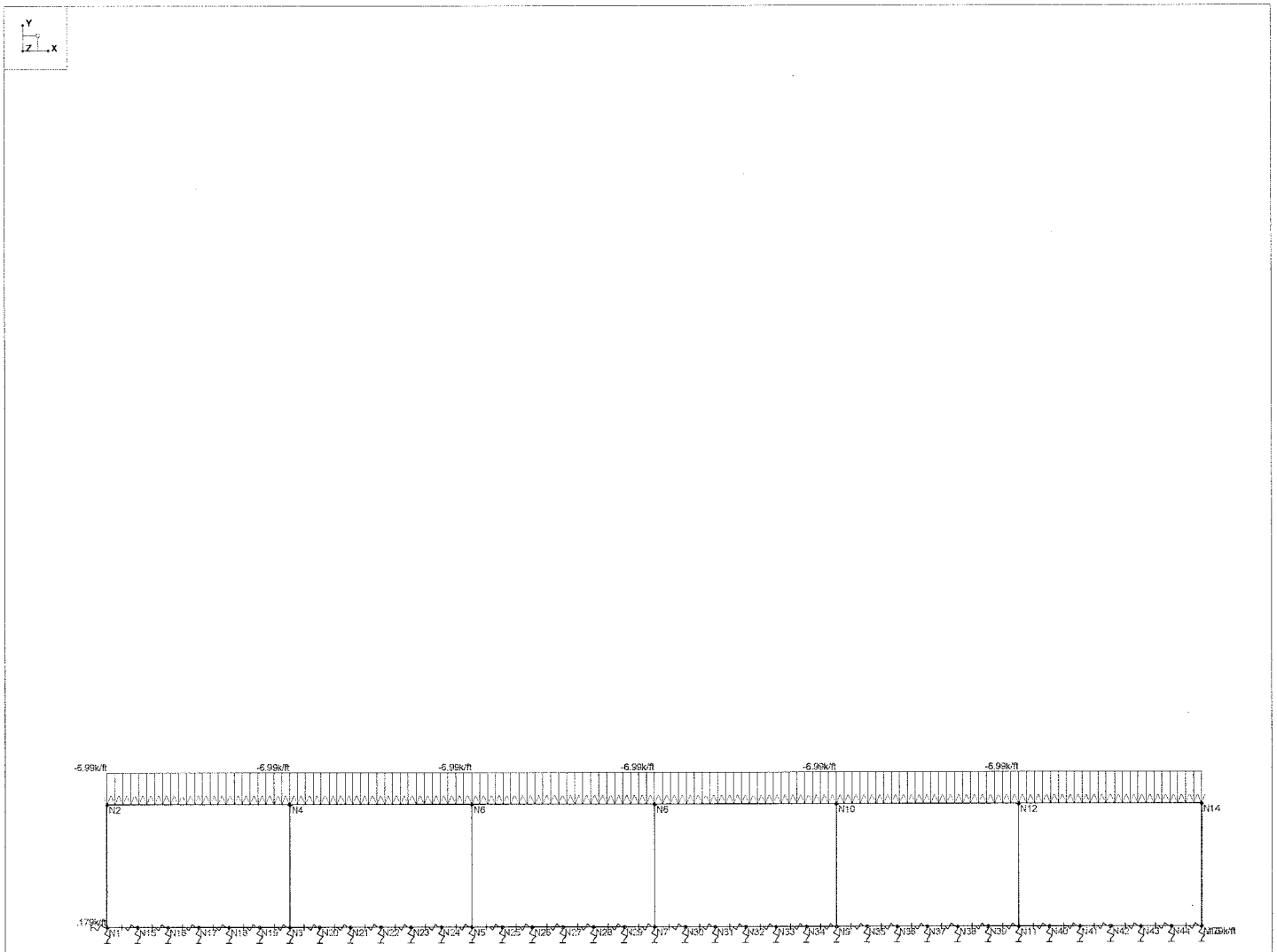

Loads: LC 4, DL+LL (Culvert Full TL, Min E)
Results for LC 2, DL+LL (Culvert Full TL, Max E)

M3 Engineering	Port of Tucson Multi-Box Culvert	SK - 5
JDM		Feb 12, 2015 at 10:12 AM
150004		150004 Box Culvert.r3d

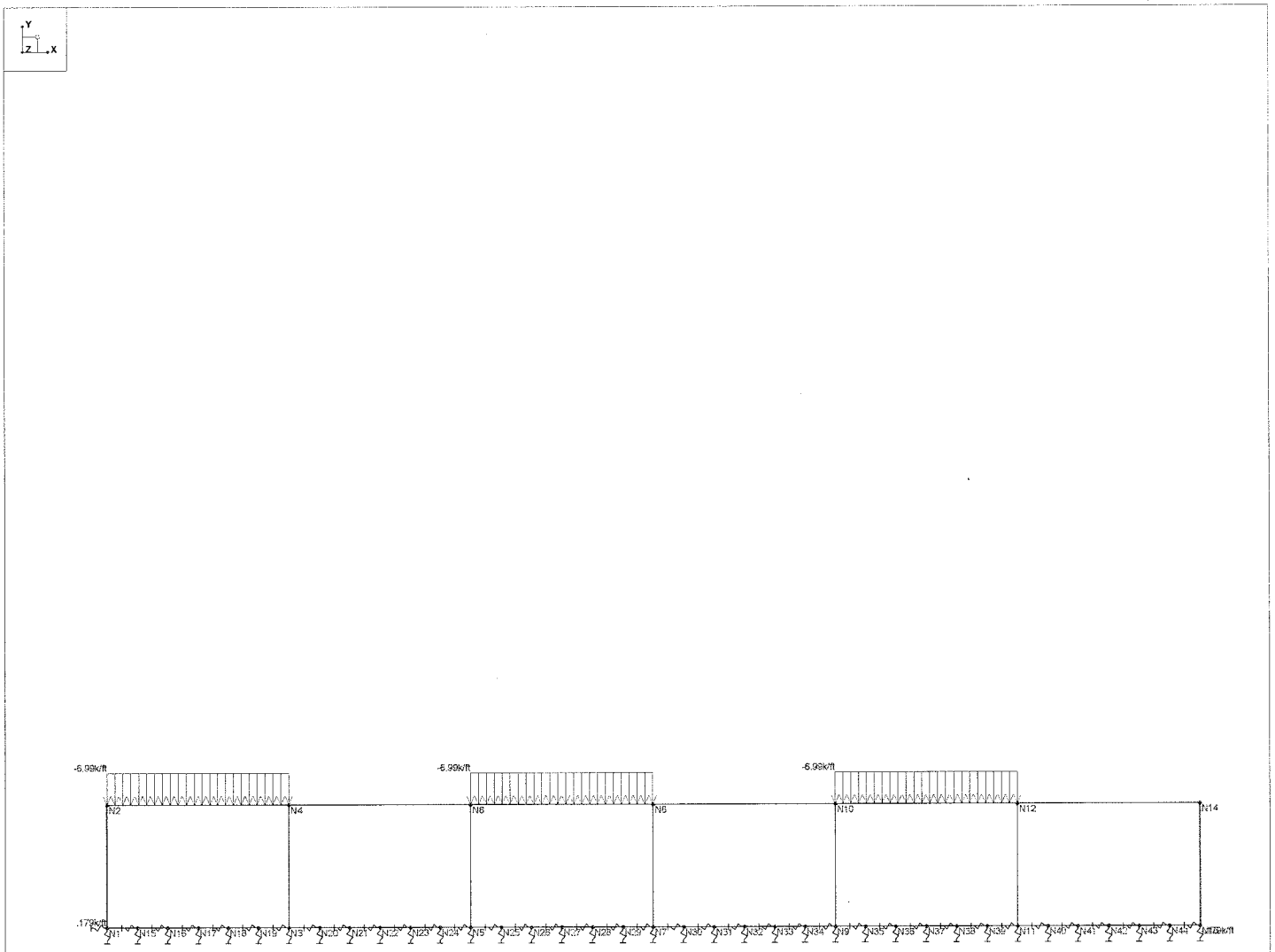

Loads: LC 5, DL+LL (Culvert Partial TL, Min E)
Results for LC 2, DL+LL (Culvert Full TL, Max E)

M3 Engineering	Port of Tucson Multi-Box Culvert	SK - 6
JDM		Feb 12, 2015 at 10:12 AM
150004		150004 Box Culvert.r3d

Basic Load Cases

	BLC Description	Category	X Gravity	Y Gravity	Z Gravity	Joint	Point	Distribu...	Area(M...	Surface...
1	self weight	DL		-1						
4	ballast	DL						6		
5	Culvert Smeared Load Full	None						6		
6	Min Lateral Earth Pressure	EPL						2		
7	Max Lateral Earth Pressure	EPL						2		
8	Culvert Smeared Load Partial	None						3		

Member Distributed Loads (BLC 4 : ballast)

	Member Label	Direction	Start Magnitude[k/ft,F]	End Magnitude[k/ft,F]	Start Location[ft,%]	End Location[ft,%]
1	M8	Y	-.25	-.25	0	0
2	M9	Y	-.25	-.25	0	0
3	M10	Y	-.25	-.25	0	0
4	M11	Y	-.25	-.25	0	0
5	M12	Y	-.25	-.25	0	0
6	M13	Y	-.25	-.25	0	0

Member Distributed Loads (BLC 5 : Culvert Smeared Load Full)

	Member Label	Direction	Start Magnitude[k/ft,F]	End Magnitude[k/ft,F]	Start Location[ft,%]	End Location[ft,%]
1	M8	Y	-3	-3	0	0
2	M9	Y	-3	-3	0	0
3	M10	Y	-3	-3	0	0
4	M11	Y	-3	-3	0	0
5	M12	Y	-3	-3	0	0
6	M13	Y	-3	-3	0	0

Member Distributed Loads (BLC 6 : Min Lateral Earth Pressure)

	Member Label	Direction	Start Magnitude[k/ft,F]	End Magnitude[k/ft,F]	Start Location[ft,%]	End Location[ft,%]
1	M1	X	.128	.128	0	0
2	M7	X	-.128	-.128	0	0

Member Distributed Loads (BLC 7 : Max Lateral Earth Pressure)

	Member Label	Direction	Start Magnitude[k/ft,F]	End Magnitude[k/ft,F]	Start Location[ft,%]	End Location[ft,%]
1	M1	X	.7	.7	0	0
2	M7	X	-.7	-.7	0	0

Member Distributed Loads (BLC 8 : Culvert Smeared Load Partial)

	Member Label	Direction	Start Magnitude[k/ft,F]	End Magnitude[k/ft,F]	Start Location[ft,%]	End Location[ft,%]
1	M8	Y	-3	-3	0	0
2	M10	Y	-3	-3	0	0
3	M12	Y	-3	-3	0	0

Joint Boundary Conditions

	Joint Label	X [k/in]	Y [k/in]	Z [k/in]	X Rot.[k-ft/rad]	Y Rot.[k-ft/rad]	Z Rot.[k-ft/rad]	Footing
1	N1	S28.8	CS28.8	Reaction				
2	N2			Reaction				
3	N3	S28.8	CS28.8	Reaction				
4	N4			Reaction				
5	N5	S28.8	CS28.8	Reaction				
6	N6			Reaction				
7	N7	S28.8	CS28.8	Reaction				
8	N8			Reaction				
9	N9	S28.8	CS28.8	Reaction				
10	N10			Reaction				
11	N11	S28.8	CS28.8	Reaction				
12	N12			Reaction				
13	N13	S28.8	CS28.8	Reaction				
14	N14			Reaction				
15	N15	S28.8	CS28.8	Reaction				
16	N16	S28.8	CS28.8	Reaction				
17	N17	S28.8	CS28.8	Reaction				
18	N18	S28.8	CS28.8	Reaction				
19	N19	S28.8	CS28.8	Reaction				
20	N20	S28.8	CS28.8	Reaction				
21	N21	S28.8	CS28.8	Reaction				
22	N22	S28.8	CS28.8	Reaction				
23	N23	S28.8	CS28.8	Reaction				
24	N24	S28.8	CS28.8	Reaction				
25	N25	S28.8	CS28.8	Reaction				
26	N26	S28.8	CS28.8	Reaction				
27	N27	S28.8	CS28.8	Reaction				
28	N28	S28.8	CS28.8	Reaction				
29	N29	S28.8	CS28.8	Reaction				
30	N30	S28.8	CS28.8	Reaction				
31	N31	S28.8	CS28.8	Reaction				
32	N32	S28.8	CS28.8	Reaction				
33	N33	S28.8	CS28.8	Reaction				
34	N34	S28.8	CS28.8	Reaction				
35	N35	S28.8	CS28.8	Reaction				
36	N36	S28.8	CS28.8	Reaction				
37	N37	S28.8	CS28.8	Reaction				
38	N38	S28.8	CS28.8	Reaction				
39	N39	S28.8	CS28.8	Reaction				
40	N40	S28.8	CS28.8	Reaction				
41	N41	S28.8	CS28.8	Reaction				
42	N42	S28.8	CS28.8	Reaction				
43	N43	S28.8	CS28.8	Reaction				
44	N44	S28.8	CS28.8	Reaction				

Envelope Member Section Forces

	Member	Sec		Axial[k]	LC	y Shear[k]	LC	z Shea...	LC	Torque...	LC	y-y Mo...	LC	z-z Moment[k-ft]	LC
1	M1	1	max	46.2	2	3.883	3	0	2	0	2	0	2	65.016	3
2			min	44.265	5	-2.033	4	0	2	0	2	0	2	56.139	4
3		2	max	45.388	2	1.923	3	0	2	0	2	0	2	63.163	5
4			min	43.453	5	-2.392	4	0	2	0	2	0	2	56.599	2
5		3	max	44.576	2	-.037	3	0	2	0	2	0	2	65.706	4
6			min	42.641	5	-2.75	4	0	2	0	2	0	2	57.325	3
7		4	max	43.764	2	-.403	5	0	2	0	2	0	2	71.565	4
8			min	41.829	5	-4.708	2	0	2	0	2	0	2	59.359	3
9		5	max	42.952	2	-.762	5	0	2	0	2	0	2	78.965	2
10			min	41.017	5	-6.668	2	0	2	0	2	0	2	64.508	5
11	M2	1	max	91.466	4	9.927	5	0	2	0	2	0	2	1.27	3
12			min	52.527	3	-.883	2	0	2	0	2	0	2	-6.867	4
13		2	max	90.654	4	9.927	5	0	2	0	2	0	2	-4.947	2
14			min	51.715	3	-.883	2	0	2	0	2	0	2	-18.732	5
15		3	max	89.842	4	9.927	5	0	2	0	2	0	2	-3.181	2
16			min	50.903	3	-.883	2	0	2	0	2	0	2	-38.586	5
17		4	max	89.03	4	9.927	5	0	2	0	2	0	2	-1.416	2
18			min	50.091	3	-.883	2	0	2	0	2	0	2	-58.44	5
19		5	max	88.218	4	9.927	5	0	2	0	2	0	2	.349	2
20			min	49.279	3	-.883	2	0	2	0	2	0	2	-78.294	5
21	M3	1	max	90.486	2	.035	4	0	2	0	2	0	2	.438	4
22			min	48.81	5	-14.096	3	0	2	0	2	0	2	-23.864	3
23		2	max	89.674	2	.035	4	0	2	0	2	0	2	4.344	5
24			min	47.998	5	-14.096	3	0	2	0	2	0	2	.355	2
25		3	max	88.862	2	.035	4	0	2	0	2	0	2	32.528	5
26			min	47.186	5	-14.096	3	0	2	0	2	0	2	.286	2
27		4	max	88.05	2	.035	4	0	2	0	2	0	2	60.711	5
28			min	46.374	5	-14.096	3	0	2	0	2	0	2	.218	2
29		5	max	87.238	2	.035	4	0	2	0	2	0	2	88.902	3
30			min	45.562	5	-14.096	3	0	2	0	2	0	2	.149	2
31	M4	1	max	90.625	2	5.28	5	0	2	0	2	0	2	0	2
32			min	48.659	5	0	2	0	2	0	2	0	2	-12.078	3
33		2	max	89.813	2	5.28	5	0	2	0	2	0	2	0	2
34			min	47.847	5	0	2	0	2	0	2	0	2	-22.631	3
35		3	max	89.001	2	5.28	5	0	2	0	2	0	2	0	2
36			min	47.035	5	0	2	0	2	0	2	0	2	-33.183	3
37		4	max	88.189	2	5.28	5	0	2	0	2	0	2	0	2
38			min	46.223	5	0	2	0	2	0	2	0	2	-43.743	5
39		5	max	87.377	2	5.28	5	0	2	0	2	0	2	0	2
40			min	45.411	5	0	2	0	2	0	2	0	2	-54.303	5
41	M5	1	max	90.486	2	-.034	2	0	2	0	2	0	2	-.424	2
42			min	48.373	5	-14.127	3	0	2	0	2	0	2	-24.275	5
43		2	max	89.674	2	-.034	2	0	2	0	2	0	2	3.981	3
44			min	47.561	5	-14.127	3	0	2	0	2	0	2	-.368	4
45		3	max	88.862	2	-.034	2	0	2	0	2	0	2	32.235	3
46			min	46.749	5	-14.127	3	0	2	0	2	0	2	-.298	4
47		4	max	88.05	2	-.034	2	0	2	0	2	0	2	60.488	3
48			min	45.937	5	-14.127	3	0	2	0	2	0	2	-.229	4
49		5	max	87.238	2	-.034	2	0	2	0	2	0	2	88.741	3
50			min	45.125	5	-14.127	3	0	2	0	2	0	2	-.159	4
51	M6	1	max	91.466	4	10.674	3	0	2	0	2	0	2	7.798	5
52			min	45.626	3	.86	4	0	2	0	2	0	2	6.712	2
53		2	max	90.654	4	10.674	3	0	2	0	2	0	2	5.148	4
54			min	44.814	3	.86	4	0	2	0	2	0	2	-13.715	3
55		3	max	89.842	4	10.674	3	0	2	0	2	0	2	3.428	4
56			min	44.002	3	.86	4	0	2	0	2	0	2	-35.062	3

Envelope Member Section Forces (Continued)

	Member	Sec		Axial[k]	LC	y Shear[k]	LC	z Shea...	LC	Torque...	LC	y-y Mo...	LC	z-z Moment[k-ft]	LC
57		4	max	89.03	4	10.674	3	0	2	0	2	0	2	1.708	4
58			min	43.19	3	.86	4	0	2	0	2	0	2	-56.409	3
59		5	max	88.218	4	10.674	3	0	2	0	2	0	2	-.011	4
60			min	42.378	3	.86	4	0	2	0	2	0	2	-77.756	3
61	M7	1	max	46.2	2	2.033	4	0	2	0	2	0	2	1.427	5
62			min	6.615	5	-1.768	3	0	2	0	2	0	2	-56.984	2
63		2	max	45.388	2	2.392	4	0	2	0	2	0	2	2.196	3
64			min	5.803	5	.192	3	0	2	0	2	0	2	-60.564	4
65		3	max	44.576	2	2.75	4	0	2	0	2	0	2	-.149	3
66			min	4.991	5	2.148	5	0	2	0	2	0	2	-65.706	4
67		4	max	43.764	2	4.708	2	0	2	0	2	0	2	-6.413	3
68			min	4.179	5	2.506	5	0	2	0	2	0	2	-71.565	4
69		5	max	42.952	2	6.668	2	0	2	0	2	0	2	-15.757	5
70			min	3.367	5	2.865	5	0	2	0	2	0	2	-78.965	2
71	M8	1	max	6.671	2	42.956	2	0	2	0	2	0	2	78.965	2
72			min	.723	5	41.015	5	0	2	0	2	0	2	64.508	5
73		2	max	6.671	2	21.123	2	0	2	0	2	0	2	-17.154	2
74			min	.723	5	19.182	5	0	2	0	2	0	2	-25.788	5
75		3	max	6.671	2	-.709	2	0	2	0	2	0	2	-47.775	2
76			min	.723	5	-2.65	5	0	2	0	2	0	2	-50.587	5
77		4	max	6.671	2	-22.542	2	0	2	0	2	0	2	-9.887	5
78			min	.723	5	-24.483	5	0	2	0	2	0	2	-12.898	2
79		5	max	6.671	2	-44.375	2	0	2	0	2	0	2	96.311	5
80			min	.723	5	-46.316	5	0	2	0	2	0	2	87.477	2
81	M9	1	max	7.557	2	43.741	4	0	2	0	2	0	2	87.871	4
82			min	-9.251	5	3.07	3	0	2	0	2	0	2	17.986	3
83		2	max	7.557	2	21.908	4	0	2	0	2	0	2	10.095	5
84			min	-9.251	5	2.207	3	0	2	0	2	0	2	-10.633	2
85		3	max	7.557	2	1.346	5	0	2	0	2	0	2	4.762	5
86			min	-9.251	5	.071	2	0	2	0	2	0	2	-43.595	2
87		4	max	7.557	2	.484	5	0	2	0	2	0	2	2.017	5
88			min	-9.251	5	-21.762	2	0	2	0	2	0	2	-11.058	2
89		5	max	7.557	2	-.379	5	0	2	0	2	0	2	86.977	2
90			min	-9.251	5	-43.595	2	0	2	0	2	0	2	1.857	3
91	M10	1	max	8.023	3	45.181	3	0	2	0	2	0	2	90.758	3
92			min	4.301	4	43.642	2	0	2	0	2	0	2	87.126	2
93		2	max	8.023	3	23.349	3	0	2	0	2	0	2	-11.05	4
94			min	4.301	4	21.81	2	0	2	0	2	0	2	-12.038	5
95		3	max	8.023	3	1.516	3	0	2	0	2	0	2	-43.731	4
96			min	4.301	4	-.023	2	0	2	0	2	0	2	-49.334	3
97		4	max	8.023	3	-20.317	3	0	2	0	2	0	2	-10.914	4
98			min	4.301	4	-21.856	2	0	2	0	2	0	2	-21.132	3
99		5	max	8.023	3	-42.15	3	0	2	0	2	0	2	87.402	2
100			min	4.301	4	-43.689	2	0	2	0	2	0	2	72.567	3
101	M11	1	max	7.525	2	43.689	2	0	2	0	2	0	2	87.402	2
102			min	-.52	5	3.261	5	0	2	0	2	0	2	18.272	5
103		2	max	7.525	2	21.856	2	0	2	0	2	0	2	9.787	3
104			min	-.52	5	2.398	5	0	2	0	2	0	2	-10.914	2
105		3	max	7.525	2	1.537	3	0	2	0	2	0	2	3.885	5
106			min	-.52	5	.023	4	0	2	0	2	0	2	-43.732	2
107		4	max	7.525	2	.674	3	0	2	0	2	0	2	.574	5
108			min	-.52	5	-21.81	4	0	2	0	2	0	2	-11.052	2
109		5	max	7.525	2	-.189	3	0	2	0	2	0	2	87.129	4
110			min	-.52	5	-43.643	4	0	2	0	2	0	2	-.159	3
111	M12	1	max	16.792	3	44.936	3	0	2	0	2	0	2	88.582	3
112			min	4.334	4	43.59	4	0	2	0	2	0	2	86.969	4
113		2	max	16.792	3	23.104	3	0	2	0	2	0	2	-11.053	4

Envelope Member Section Forces (Continued)

	Member	Sec		Axial[k]	LC	y Shear[k]	LC	z Shea...	LC	Torque...	LC	y-y Mo...	LC	z-z Moment[k-ft]	LC
114			min	4.334	4	21.758	4	0	2	0	2	0	2	-13.478	3
115		3	max	16.792	3	1.271	3	0	2	0	2	0	2	-43.576	4
116			min	4.334	4	-.075	4	0	2	0	2	0	2	-50.039	3
117		4	max	16.792	3	-20.562	3	0	2	0	2	0	2	-10.602	4
118			min	4.334	4	-21.908	4	0	2	0	2	0	2	-21.102	3
119		5	max	16.792	3	-42.395	3	0	2	0	2	0	2	87.871	4
120			min	4.334	4	-43.741	4	0	2	0	2	0	2	73.333	3
121	M13	1	max	6.671	2	44.475	4	0	2	0	2	0	2	87.86	4
122			min	2.87	5	-.026	3	0	2	0	2	0	2	-4.423	3
123		2	max	6.671	2	22.643	4	0	2	0	2	0	2	-2.963	5
124			min	2.87	5	-.889	3	0	2	0	2	0	2	-12.898	2
125		3	max	6.671	2	.81	4	0	2	0	2	0	2	.911	3
126			min	2.87	5	-1.752	3	0	2	0	2	0	2	-47.996	4
127		4	max	6.671	2	-2.511	5	0	2	0	2	0	2	7.46	3
128			min	2.87	5	-21.123	2	0	2	0	2	0	2	-17.677	4
129		5	max	6.671	2	-3.374	5	0	2	0	2	0	2	78.965	2
130			min	2.87	5	-42.956	2	0	2	0	2	0	2	15.757	5
131	M14	1	max	3.844	3	-28.759	5	0	2	0	2	0	2	-56.139	4
132			min	-1.994	4	-30.308	2	0	2	0	2	0	2	-65.016	3
133		2	max	3.771	3	-16.048	5	0	2	0	2	0	2	21.171	4
134			min	-1.954	4	-16.611	2	0	2	0	2	0	2	9.394	3
135		3	max	3.701	3	9.042	4	0	2	0	2	0	2	45.365	4
136			min	-1.915	4	-5.603	3	0	2	0	2	0	2	36.313	3
137		4	max	3.572	3	22.356	4	0	2	0	2	0	2	14.774	3
138			min	-1.845	4	13.139	3	0	2	0	2	0	2	5.382	4
139		5	max	3.513	3	37.533	4	0	2	0	2	0	2	-43.293	3
140			min	-1.812	4	22.235	3	0	2	0	2	0	2	-92.496	4
141	M15	1	max	13.408	3	-19.933	3	0	2	0	2	0	2	-44.563	3
142			min	-2.645	4	-36.615	4	0	2	0	2	0	2	-85.628	4
143		2	max	13.367	3	-11.136	3	0	2	0	2	0	2	9.288	2
144			min	-2.617	4	-21.193	4	0	2	0	2	0	2	6.855	5
145		3	max	13.339	3	5.327	3	0	2	0	2	0	2	44.482	2
146			min	-2.592	4	-7.238	4	0	2	0	2	0	2	23.929	5
147		4	max	13.323	3	20.99	2	0	2	0	2	0	2	9.937	4
148			min	-2.549	4	13.213	5	0	2	0	2	0	2	.515	3
149		5	max	13.335	3	36.462	2	0	2	0	2	0	2	-56.654	5
150			min	-2.532	4	21.761	5	0	2	0	2	0	2	-84.448	2
151	M16	1	max	.257	2	-17.36	5	0	2	0	2	0	2	-32.816	5
152			min	-3.437	5	-36.604	2	0	2	0	2	0	2	-84.872	2
153		2	max	.256	2	-9.456	5	0	2	0	2	0	2	11.817	3
154			min	-3.398	5	-21.126	2	0	2	0	2	0	2	9.919	2
155		3	max	.255	2	5.288	3	0	2	0	2	0	2	44.866	2
156			min	-3.363	5	-7.139	2	0	2	0	2	0	2	25.644	5
157		4	max	.254	2	21.113	2	0	2	0	2	0	2	9.964	2
158			min	-3.302	5	12.556	5	0	2	0	2	0	2	2.971	3
159		5	max	.253	2	36.597	2	0	2	0	2	0	2	-51.513	5
160			min	-3.277	5	20.738	5	0	2	0	2	0	2	-84.8	2
161	M17	1	max	4.764	3	-18.279	5	0	2	0	2	0	2	-39.45	5
162			min	-2.447	4	-36.597	2	0	2	0	2	0	2	-84.8	2
163		2	max	4.791	3	-10.115	5	0	2	0	2	0	2	9.964	2
164			min	-2.449	4	-21.113	2	0	2	0	2	0	2	7.679	5
165		3	max	4.859	3	7.139	2	0	2	0	2	0	2	44.866	2
166			min	-2.462	4	5.527	5	0	2	0	2	0	2	22.632	5
167		4	max	4.901	3	21.126	2	0	2	0	2	0	2	9.924	4
168			min	-2.472	4	13.219	5	0	2	0	2	0	2	-1.195	3
169		5	max	4.948	3	36.604	2	0	2	0	2	0	2	-58.164	5
170			min	-2.484	4	21.652	5	0	2	0	2	0	2	-84.872	2

Envelope Member Section Forces (Continued)

	Member	Sec		Axial[k]	LC	y Shear[k]	LC	z Shea...	LC	Torque...	LC	y-y Mo...	LC	z-z Moment[k-ft]	LC
171	M18	1	max	.226	2	-17.113	5	0	2	0	2	0	2	-33.889	5
172			min	-11.84	5	-36.462	2	0	2	0	2	0	2	-84.448	2
173		2	max	.228	2	-9.333	5	0	2	0	2	0	2	10.126	5
174			min	-11.817	5	-20.99	2	0	2	0	2	0	2	9.922	2
175		3	max	.232	2	7.238	4	0	2	0	2	0	2	44.482	2
176			min	-11.807	5	4.865	3	0	2	0	2	0	2	23.996	5
177		4	max	.235	2	21.193	4	0	2	0	2	0	2	9.288	2
178			min	-11.82	5	11.633	3	0	2	0	2	0	2	3.07	5
179		5	max	.238	2	36.615	4	0	2	0	2	0	2	-47.241	3
180			min	-11.844	5	19.127	3	0	2	0	2	0	2	-85.628	4
181	M19	1	max	1.745	3	-17.704	3	0	2	0	2	0	2	-54.873	3
182			min	-1.812	4	-37.533	4	0	2	0	2	0	2	-92.496	4
183		2	max	1.744	3	-10.737	3	0	2	0	2	0	2	5.424	2
184			min	-1.845	4	-22.356	4	0	2	0	2	0	2	-8.303	5
185		3	max	1.746	3	-5.317	3	0	2	0	2	0	2	45.365	4
186			min	-1.915	4	-9.042	4	0	2	0	2	0	2	12.644	3
187		4	max	1.75	3	16.611	2	0	2	0	2	0	2	21.171	4
188			min	-1.954	4	2.144	5	0	2	0	2	0	2	11.841	3
189		5	max	1.756	3	30.308	2	0	2	0	2	0	2	1.427	5
190			min	-1.994	4	4.141	5	0	2	0	2	0	2	-56.984	2

I. GENERAL

A. GENERAL REFERENCE:
ALL WORK MUST CONFORM TO THE REQUIREMENTS OF THE INTERNATIONAL BUILDING CODE, 2012 EDITION, AND OSHA, LATEST EDITION.

B. THE GENERAL STRUCTURAL NOTES ARE AN INSTRUMENT OF THE STRUCTURAL DRAWINGS AND SHALL BE THOROUGHLY REVIEWED BY THE GENERAL CONTRACTOR AND ALL OTHER TRADES ASSOCIATED WITH THE PROJECT.

C. THE OWNER SHALL CONTRACT A QUALIFIED THIRD-PARTY INSPECTION AGENCY APPROVED BY THE AUTHORITY HAVING JURISDICTION. THE INSPECTION AGENCY SHALL PREPARE A QUALITY ASSURANCE AND TESTING PROGRAM IN ACCORDANCE WITH CHAPTER 17 OF THE IBC, LATEST EDITION.

D. SPECIAL INSPECTION IS REQUIRED FOR THE FOLLOWING WITH INSPECTION FREQUENCIES PER IBC 2012, TABLE 1705.3 W/ LOCAL AMENDMENTS.

		YES	NO	N/A
1.	CONCRETE	☒	☐	☐
2.	BOLTS INSTALLED IN CONCRETE	☐	☐	☒
3.	SPECIAL MOMENT RESISTING CONCRETE FRAME	☐	☐	☒
4.	REINFORCING STEEL AND PRESTRESSING STEEL TENDONS	☒	☐	☐
5.	FIELD WELDING	☐	☐	☒
6.	HIGH STRENGTH BOLTING	☐	☐	☒
7.	STRUCTURAL MASONRY	☐	☐	☒
8.	REINFORCED GYPSUM CONCRETE	☐	☐	☒
9.	INSULATING CONCRETE FILL	☐	☐	☒
10.	SPRAY APPLIED FIRE PROOFING	☐	☐	☒
11.	PILING, DRILLED PIERS AND CAISSONS	☐	☐	☒
12.	SHOTCRETE	☐	☐	☒
13.	SPECIAL GRADING, EXCAVATION & FILLING	☒	☐	☐
14.	EPOXY SET ANCHORAGE	☒	☐	☐
15.	SEISMIC RESISTANCE PER IBC 1707	☐	☐	☒

E. DESIGN LOADS:
1. TOTAL LOAD (DEAD LOAD+LIVE LOAD+IMPACT LOAD) - 3000 PSF
2. LATERAL EARTH PRESSURE LOAD - 128 PSF - 700 PSF
3. IBC 2012 & AREMA 2014 CODE MINIMUM SOIL VALVES:
BEARING PRESSURE - 1500 PSF AT 0'-0" BELOW FINISHED GRADE ELEVATION.
ACTIVE FLUID PRESSURE COEFFICIENT:
Kmin = 0.33
Kmax = 1.00

F. THE CONTRACT STRUCTURAL DRAWINGS AND SPECIFICATIONS REPRESENT THE FINISHED STRUCTURE. THEY DO NOT INDICATE THE MEANS OR METHOD OF CONSTRUCTION. THE CONTRACTOR SHALL PROVIDE ALL MEASURES NECESSARY TO PROTECT THE STRUCTURE DURING CONSTRUCTION. SUCH MEASURES SHALL INCLUDE, BUT NOT BE LIMITED TO: BRACING, SHORING OF LOADS DUE TO CONSTRUCTION EQUIPMENT, ETC. OBSERVATION VISITS TO THE SITE BY THE STRUCTURAL ENGINEER SHALL NOT INCLUDE INSPECTION OF THE ABOVE ITEMS.

G. CONTRACTOR SHALL BE RESPONSIBLE FOR VERIFICATION OF ALL DIMENSIONS WITH ARCHITECTURAL DRAWINGS AND ANY EXISTING STRUCTURES PRIOR TO START OF CONSTRUCTION. RESOLVE ANY DISCREPANCY WITH ARCHITECT.

H. CONSTRUCTION MATERIAL SHALL BE SPREAD OUT IF PLACED ON FRAMED FLOORS OR ROOFS. LOAD SHALL NOT EXCEED THE CONSTRUCTION LIVE LOAD PER SQUARE FOOT.

I. WHERE REFERENCE IS MADE TO VARIOUS TEST STANDARDS FOR MATERIALS, SUCH STANDARDS SHALL BE THE LATEST EDITION AND/OR ADDENDUM.

J. ESTABLISH AND VERIFY ALL OPENINGS AND INSERTS FOR ARCHITECTURAL, MECHANICAL, ELECTRICAL AND PLUMBING WITH APPROPRIATE TRADES, DRAWINGS AND SUBCONTRACTORS PRIOR TO CONSTRUCTION.

K. OPTIONS ARE FOR CONTRACTOR'S CONVENIENCE. CONTRACTOR SHALL BE RESPONSIBLE FOR ALL CHANGES NECESSARY IF CONTRACTOR CHOOSES AN OPTION AND CONTRACTOR SHALL COORDINATE ALL DETAILS.

L. NOTES AND DETAILS ON DRAWINGS SHALL TAKE PRECEDENCE OVER GENERAL STRUCTURAL NOTES AND TYPICAL DETAILS. WHERE NO SPECIFIC DETAILS ARE SHOWN, CONSTRUCTION SHALL CONFORM TO SIMILAR WORK ON THE PROJECT.

M. TYPICAL DETAILS ARE NOT CUT ON DRAWINGS, BUT APPLY UNLESS NOTED OTHERWISE.

N. WHERE ANY DISCREPANCIES OCCUR BETWEEN PLANS, DETAILS, GENERAL STRUCTURAL NOTES AND SPECIFICATIONS, THE GREATER REQUIREMENTS SHALL GOVERN. MODIFICATION OF CERTAIN CONNECTION DETAILS AS PART OF THE SHOP DRAWING REVIEW PROCESS SHALL BE ANTICIPATED BY THE CONTRACTOR.

O. THE CONTRACTOR SHALL VERIFY ALL FIELD DIMENSIONS PRIOR TO ORDERING MATERIALS AND STARTING CONSTRUCTION. THE ENGINEER SHALL BE NOTIFIED OF ANY DISCREPANCIES OR INCONSISTENCIES.

P. CALCULATIONS FOR DESIGN/BUILD ITEMS MUST BE SUBMITTED FOR REVIEW OF ARCHITECT/STRUCTURAL ENGINEER AND SHALL BEAR THE SEAL OF A STRUCTURAL ENGINEER REGISTERED IN THE STATE OF ARIZONA.

Q. ALL CONSTRUCTION BRACING AND SHORING MUST BE DESIGNED BY THE CONTRACTOR.

R. STRUCTURAL ENGINEER IS NOT RESPONSIBLE FOR ANY ASPECT OF THE GEOTECHNICAL DESIGN.

S. INSPECTIONS REQUIRED FOR PERMITTING AS MANDATED BY IBC SECTION 109 AND NON-SPECIAL INSPECTIONS MANDATED BY THE MUNICIPALITY, COUNTY, OR AUTHORITY HAVING JURISDICTION WHICH ARE ALSO REQUIRED FOR BUILDING PERMITTING SHALL BE COORDINATED BY THE GENERAL CONTRACTOR. IF DISCREPANCIES OCCUR, NOTIFY THE ARCHITECT/STRUCTURAL ENGINEER OR RECORD FOR REVIEW.

T. ALL SUBSTITUTIONS SHALL BE SUBMITTED TO THE STRUCTURAL ENGINEER OF RECORD FOR REVIEW PRIOR TO CONSTRUCTION. CONTRACTOR TO SUBMIT DOCUMENTATION SEALED BY A LICENSED STRUCTURAL ENGINEER TO DEMONSTRATE THAT THE PROPOSED SUBSTITUTION IS EQUAL TO THE SPECIFIED DESIGN. SUBSTITUTIONS MAY BE USED PROVIDED THEY ARE APPROVED BY THE STRUCTURAL ENGINEER OF RECORD IN WRITING.

II. SOILS AND EARTHWORK

A. FILL MATERIAL:
1. ANY IMPORTED ENGINEERING FILLS SHALL HAVE THE FOLLOWING GRADATION BY WEIGHT:
100% PASSING 6" SIEVE
70-100% PASSING 3" [75mm] SIEVE
50-100% PASSING #4 [4.75mm] SIEVE
15% MAXIMUM PASSING #200 [75 MICROMILLIMETER] SIEVE
LIQUID LIMIT 30 MAX
PLASTICITY INDEX 15 MAX
MAXIMUM SOLUBLE SULFATES = 0.1%
MAXIMUM EXPANSION POTENTIAL OF 1.5%
2. SLAB BASE COURSE SHALL HAVE 100% PASSING 1-1/2" [37.5mm] SIEVE, 45% TO 90% PASSING #4 [4.75mm] SIEVE, NO MORE THAN 12% PASSING #200 SIEVE.
3. COMPACTION TO 95% OF ASTM D-1557 AS PER ABOVE.

B. FINISH GRADING SHALL BE ACCOMPLISHED IN SUCH A MANNER AS TO SLOPE GRADE (MINIMUM OF 5%) AWAY FROM FOUNDATIONS. GRADING SHALL ALSO ELIMINATE ANY POTENTIAL PONDING NEAR FOUNDATIONS. POSITIVE DRAINAGE SHALL BE PROVIDED BOTH DURING CONSTRUCTION AND THE FINISHED STRUCTURE. THE CONTRACTOR SHALL PROVIDE ADEQUATE MEANS OF PREVENTING MOISTURE INFILTRATION INTO PLUMBING TRENCHES AND FOOTING EXCAVATIONS.

C. DRIP IRRIGATION SYSTEMS SHALL NOT BE LOCATED NEAR FOUNDATIONS. LANDSCAPE WATERING SHALL NOT LEAD TO MOISTURE INFILTRATION AND/OR MOISTURE CONTENT FLUCTUATION IN THE SOILS UNDER THE FOUNDATION. IT IS RECOMMENDED THAT VEGETATION BE KEPT AWAY FROM THE FOUNDATION.

D. EARTHWORK AND EXCAVATIONS SHALL BE PERFORMED, TESTED, AND EVALUATED IN ACCORDANCE WITH THE GEOTECHNICAL ENGINEER'S RECOMMENDATIONS. AT A MINIMUM THE EVALUATION SHALL INCLUDE OBSERVATION AND TESTING OF ENGINEERED FILL AND/OR NATIVE SOIL, SUBGRADE PREPARATION, FOUNDATION BEARING SOILS, AND OTHER GEOTECHNICAL CONDITIONS AS REQUIRED BY THE GEOTECHNICAL ENGINEER.

E. BACKFILL AGAINST FOOTINGS, EXTERIOR WALLS, AND UTILITY AND/OR SPRINKLER LINE TRENCHES SHALL BE COMPACTED PER THE SOILS REPORT AND SHALL BE FREE OF CONSTRUCTION DEBRIS AND OTHER DELETERIOUS MATERIALS.

F. CONTRACTOR SHALL PROVIDE FOR PROPER DEWATERING OF EXCAVATIONS FROM SURFACE WATER, GROUND WATER, SEEPAGE, ETC.

III. CONCRETE

A. ALL CONCRETE SHALL BE READY MIXED CONFORMING TO ASTM C94. IN ADDITION, ALL CONSTRUCTION SHALL COMPLY WITH APPLICABLE PROVISIONS OF THE FOLLOWING LATEST ACI STANDARDS:
1. ACI 318-BUILDING CODE REQUIREMENTS FOR STRUCTURAL CONCRETE.
2. ACI 301-SPECIFICATIONS FOR STRUCTURAL CONCRETE BUILDING.
3. ACI 306-PRACTICE FOR HOT WEATHER CONCRETING.
4. ACI 306-PRACTICE FOR COLD WEATHER CONCRETING.
5. ACI 211.1-PRACTICE FOR SELECTING PROPORTIONS FOR CONCRETE.
6. ACI 304-PRACTICE FOR MEASURING, MIXING AND PLACING.
7. ACI 315-PRACTICE FOR DETAILING CONCRETE.
8. ACI 347-PRACTICE FOR FORMWORK.

B. CONCRETE MATERIALS SHALL CONFORM TO THE FOLLOWING STANDARDS:
1. PORTLAND CEMENT: ASTM C150, TYPE II (GRAY).
2. FLY ASH: ASTM C618, CLASS F.
3. NORMAL WEIGHT AGGREGATE: ASTM C33, COARSE AGGREGATE OR BETTER. AGGREGATE SHALL NOT BE SUSCEPTIBLE TO DELETERIOUS EXPANSION OF CONCRETE DUE TO ALKALI AGGREGATE REACTIVITY.
4. MAXIMUM COARSE AGGREGATE SIZE: 1-1/2 INCHES NOMINAL.
5. FINE AGGREGATE: FREE OF MATERIALS SUSCEPTIBLE TO ALKALI REACTIVITY.
6. AIR ENTRAINING ADMIXTURE: ASTM C260.
7. WATER: ASTM C94 [C94M] AND POTABLE.

C. CONCRETE MIXTURES: FOOTINGS
1. MINIMUM COMPRESSIVE STRENGTH: 4000 PSI [20.7 MPa] AT 28 DAYS.
2. MAXIMUM WATER-CEMENT RATIO: 0.50.
3. SLUMP LIMIT: 4 INCHES PLUS OR MINUS 1 INCH [100mm ± 25mm].
4. FLY ASH: 25 PERCENT MAX.
5. AIR ENTRAINMENT: 5 PERCENT PLUS OR MINUS 1 PERCENT.

D. CONCRETE MIXTURES: SLABS ON GRADE
1. MINIMUM COMPRESSIVE STRENGTH: 4000 PSI [27.6 MPa] AT 28 DAYS.
2. MAXIMUM WATER-CEMENT RATIO: 0.45.
3. SLUMP LIMIT: 4 INCHES PLUS OR MINUS 1 INCH [100mm ± 25mm].
4. FLY ASH: 25 PERCENT MAX.
5. AIR ENTRAINMENT: 5 PERCENT PLUS OR MINUS 1 PERCENT.

E. CONCRETE MIXTURES: BEAMS, WALLS, AND COLUMNS
1. MINIMUM COMPRESSIVE STRENGTH: 4000 PSI [27.6 MPa] AT 28 DAYS.
2. MAXIMUM WATER-CEMENT RATIO: 0.45.
3. SLUMP LIMIT: FOR CONCRETE WITH VERIFIED SLUMP OF 2 TO 4 INCHES [50mm TO 100mm] BEFORE ADDING HIGH-RANGE WATER-REDUCING ADMIXTURE OR PLASTICIZING ADMIXTURE, PLUS OR MINUS 1 INCH [± 25mm].
4. FLY ASH: 25 PERCENT MAX.
5. AIR ENTRAINMENT: 5 PERCENT PLUS OR MINUS 1 PERCENT.

F. ALL CONCRETE SHALL OBTAIN A 4000 PSI [27.6 MPa] MINIMUM COMPRESSIVE STRENGTHS AT 28 DAYS.

G. CONCRETE PLACEMENT:
1. CONSOLIDATE PLACED CONCRETE WITH MECHANICAL VIBRATING EQUIPMENT ACCORDING TO ACI 301. DO NOT VIBRATE SELF-CONSOLIDATING CONCRETE.
2. CONCRETE SHALL NOT BE DROPPED MORE THAN FOUR FEET [1.2m] VERTICALLY WITHOUT THE USE OF A TREMIE.
3. UNLESS NOTED OTHERWISE, SLABS SHALL BE MACHINE TROWELED TO A SMOOTH HARD FINISH. WALKS, OPERATION AND MAINTENANCE AREAS SHALL BE BROOM FINISHED AFTER THE STEEL TROWEL FINISH. STORAGE AREAS SHALL BE LEFT SMOOTH.
4. ALL CONCRETE MUST BE CURED IN ACCORDANCE WITH ACI 308.1.
5. DO NOT ADD WATER TO CONCRETE DURING DELIVERY, AT PROJECT SITE, OR DURING PLACEMENT UNLESS APPROVED IN ADVANCE BY THE STRUCTURAL ENGINEER OF RECORD IN WRITING.

III. CONCRETE (CONT.)

H. MINIMUM CONCRETE REINFORCING OVER BARS SHALL BE AS FOLLOWS:
1. CONCRETE POURED DIRECTLY AGAINST EARTH ..... 3" [80 mm]
2. ALL OTHER CONCRETE ..... 2" [50 mm]

I. CONCRETE FOOTINGS AND PADS MAY BE POURED AGAINST NEAT EXCAVATIONS.

J. CORNERS OF COLUMNS AND BEAMS EXPOSED TO VIEW SHALL BE DETAILED WITH 3/4" [20mm] BY 45° CHAMFERS UNLESS NOTED OTHERWISE ON THE DRAWINGS.

K. ALL REINFORCING BARS, ANCHOR BOLTS AND CONCRETE INSERTS SHALL BE SECURED IN POSITION AND LOCATED PER STRUCTURAL DRAWINGS PRIOR TO PLACING CONCRETE.

L. CAST IN PLACE ANCHOR RODS SHALL CONFORM TO ASTM F1554, GRADE 36 OR ASTM A307, GRADE A, U.N.O.

M. SHEAR STUDS FOR EMBEDDED ITEMS SHALL CONFORM TO ASTM A108 AND SHALL BE WELDED IN ACCORDANCE WITH MANUFACTURER'S RECOMMENDATIONS. STUDS SHALL BE CAPABLE OF BENDING 45° WITHOUT WELD FAILURE.

N. PROVIDE SLEEVES FOR PLUMBING AND ELECTRICAL OPENINGS IN CONCRETE BEFORE PLACING CONCRETE. VERIFY OPENINGS WITH ELECTRICAL AND MECHANICAL DRAWINGS. DO NOT CUT ANY REINFORCING WHICH MAY CONFLICT.

O. NO CONSTRUCTION JOINTS (OTHER THAN THOSE SHOWN ON DRAWINGS) SHALL BE INSTALLED WITHOUT APPROVAL OF THE ENGINEER. PROVIDE 3/4" [20mm] CHAMFER AT ALL EXPOSED CORNERS.

P. CONTRACTOR SHALL NOTIFY THE STRUCTURAL ENGINEER 24 HRS IN ADVANCE TO OBSERVE COMPLETED FOOTING EXCAVATION AND ALL REINFORCING BAR PLACEMENTS BEFORE ANY CONCRETE IS PLACED.

Q. NO WELDING OF STIRRUPS, TIES, INSERTS, OR OTHER SIMILAR ELEMENTS TO LONGITUDINAL REINFORCEMENT IS PERMITTED UNLESS NOTED OTHERWISE ON THESE DRAWINGS PER ACI-08, CHAPTER 21.1.7.2.

R. REINFORCING STEEL:
1. ALL REINFORCING STEEL SHALL BE DEFORMED BARS CONFORMING TO ASTM A615 GRADE 40 FOR #4 OR LESS, GRADE 60 FOR #5 OR GREATER. PROVIDE ASTM A706 REINFORCING STEEL WHERE WELDING IS REQUIRED AND AS INDICATED ON STRUCTURAL DRAWINGS.
2. DEFORMED BAR ANCHORS SHALL BE NELSON STUD D2L (OR APPROVED EQUAL) AND SHALL CONFORM TO ASTM A496 AND SHALL HAVE A MINIMUM YIELD STRESS OF 70 KSI.
3. ALL REINFORCING IN CONCRETE SHALL BE CONTINUOUS OR LAPPED IN ACCORDANCE WITH THE AREMA MANUAL FOR RAILWAY ENGINEERING. ALL LAP LENGTHS SHALL COMPLY WITH THE FOLLOWING TABLE:

SPICE LENGTH (STAGGERED)		
BAR SIZE	TOP BARS	OTHER BARS
#6	33"	24"
#8	55"	39"

2

4. SPLICES SHALL BE STAGGERED SUCH THAT THE SPLICE CLEAR SPACING IS TWICE THAT OF THE REINFORCING BAR SPACING.
5. TOP BARS ARE HORIZONTAL BARS SO PLACED THAT MORE THAN 12 INCHES [300 mm] OF FRESH CONCRETE IS CAST IN THE MEMBER BELOW THE BAR.
6. WELDED WIRE REINFORCING SHALL HAVE A MINIMUM YIELD STRENGTH OF 65,000 PSI AND CONFORM TO ASTM A185. MINIMUM LAP LENGTH SHALL BE 6 INCHES OR ONE FULL MESH AND ONE HALF (WHICHEVER IS GREATER).

IV. CONCRETE REPAIR PROCEDURE

A. REMOVE LOOSE OR DELAMINATED CONCRETE ABOVE REINFORCING STEEL.

B. CONCRETE SURFACES TO RECEIVE REPAIR MATERIALS SHOULD BE SATURATED SURFACE-DRY (SSD).

C. APPLY BONDING AGENT.

D. PLACE REPAIR MATERIAL INTO THE PREPARED CAVITY. SCREED, FLOAT, TROWEL, AND CURE IN ACCORDANCE WITH THE MANUFACTURER'S RECOMMENDATIONS.

E. USE "EUCO RE-COVER" MORTAR OR APPROVED EQUAL.

V. EPOXY SET BOLTS OR DOWELS

A. EPOXY SET BOLTS OR DOWELS SHALL BE A THREADED ROD OR REINFORCING STEEL INSTALLED WITH THE "SET-XP" ADHESIVE BY SIMPSON PER ICC ESR-2508.

B. EXPANSION BOLTS SHALL BE "KWIK BOLT TZ" BY HILTI INSTALLED PER ICC ESR-1917.

C. THE CONTRACTOR MAY NOT USE SUBSTITUTES FOR EPOXY SET ANCHORS WITHOUT WRITTEN PRIOR APPROVAL OF THE STRUCTURAL ENGINEER OF RECORD.

D. FOR MINIMUM EMBEDMENT LENGTH SEE DETAILS. INSTALL ALL BOLTS AS OUTLINED IN MANUFACTURER'S SPECIFICATIONS, UTILIZING PROPER SIZE AND TYPE OF DRILL, CLEANING HOLE, DRIVING AND TIGHTENING BOLT.

E. SPECIAL INSPECTION OF ALL EPOXY SET ANCHORS IS REQUIRED.

F. LOCATION(S) OF EXISTING REINFORCEMENT SHALL BE VERIFIED AND AVOIDED PRIOR TO DRILLING FOR EMBEDMENT, U.N.O.

VI. HANDRAIL

2

A. HANDRAIL SHALL BE 1-1/4 INCH DIAMETER STANDARD BLACK PIPE.

B. HANDRAIL SHALL BE PRIMED WITH 2 MILS DRY-FILM THICKNESS (DFT) SHOP STANDARD APPLIED AFTER CLEANING IN ACCORDANCE WITH MANUFACTURER'S RECOMMENDATIONS (POWER BRUSH CLEAN MINIMUM).

C. TOP COAT SHALL BE "OSHA YELLOW" with 3 MILS DRY-FILM THICKNESS SEMI-GLOSS ALKYD ENAMEL.

ABBREVIATIONS

(NOT ALL ABBREVIATIONS SHOWN BELOW ARE USED IN THIS SET OF DRAWINGS)

B.O.C.	BOTTOM OF CONCRETE
C.J.	CONTROL JOINT
CLR.	CLEAR(ANCE)
CONT.	CONTINUOUS
EL., ELEV.	ELEVATION
O.C., O/C	ON CENTER
T.O.C.	TOP OF CONCRETE
TYP.	TYPICAL

LEGEND

(NOT ALL SYMBOLS SHOWN BELOW ARE USED IN THIS SET OF DRAWINGS)

SYMBOL	DESCRIPTION
	EARTH
	BALLAST

KEYING SYMBOLS

(NOT ALL SYMBOLS SHOWN BELOW ARE USED IN THIS SET OF DRAWINGS)

B — SECTION LETTER; SFU401 — SHEET NUMBER	GENERAL BUILDING SECTION
11 — DETAIL NUMBER; SFU503 — SHEET NUMBER	DETAIL CUT
5 — KEYNOTE NUMBER	KEYNOTE

APPROVED _____
FOR CONSTRUCTION

MULTI-BOX CULVERT PORT OF TUCSON

6964 E.Century Park Drive Tucson, Arizona 85756

2051 W. SUNSET RD.
SUITE 101
TUCSON, ARIZONA 85704
TEL. (520) 293-1488
FAX. (520) 293-8349
M3ENG.COM

ARCHITECTURE
ENGINEERING
CONSTRUCTION MANAGEMENT

Revisions

Description	Date
1 APPR. FOR CONST.	12 FEB 15
2 U.P.R.R. COMMENTS	2 MAR 15
3	
4	
5	
6	

Drawn: NCR
Checked: JDM
Issue Date: 2 MAR 15

Drawing Title
GENERAL STRUCTURAL NOTES

Sheet Number
SK-000

M3PN 150004

File: P:\2015\15200A\Structural\SK-000.dwg LAST UPDATE:3/2/2015 4:21 PM BY: JMB97

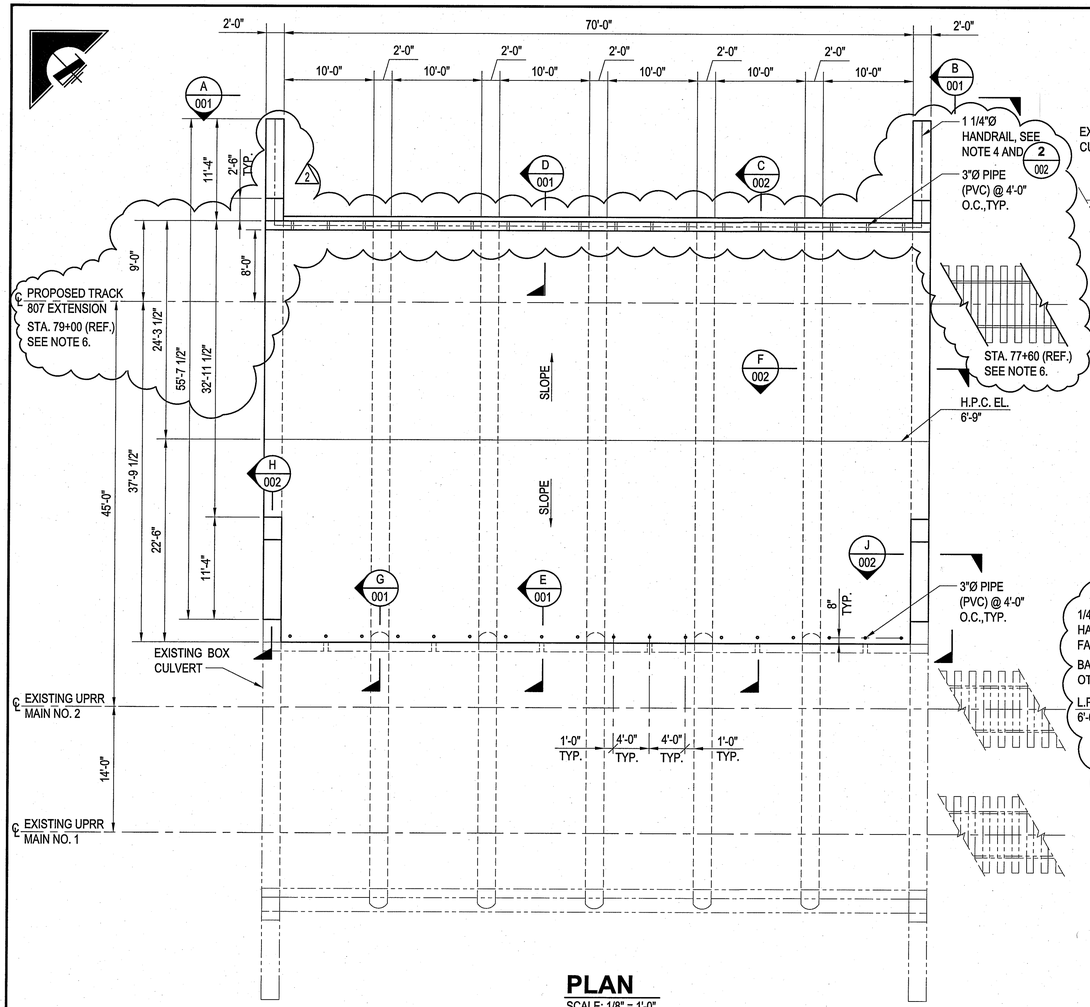

PLAN
SCALE: 1/8" = 1'-0"

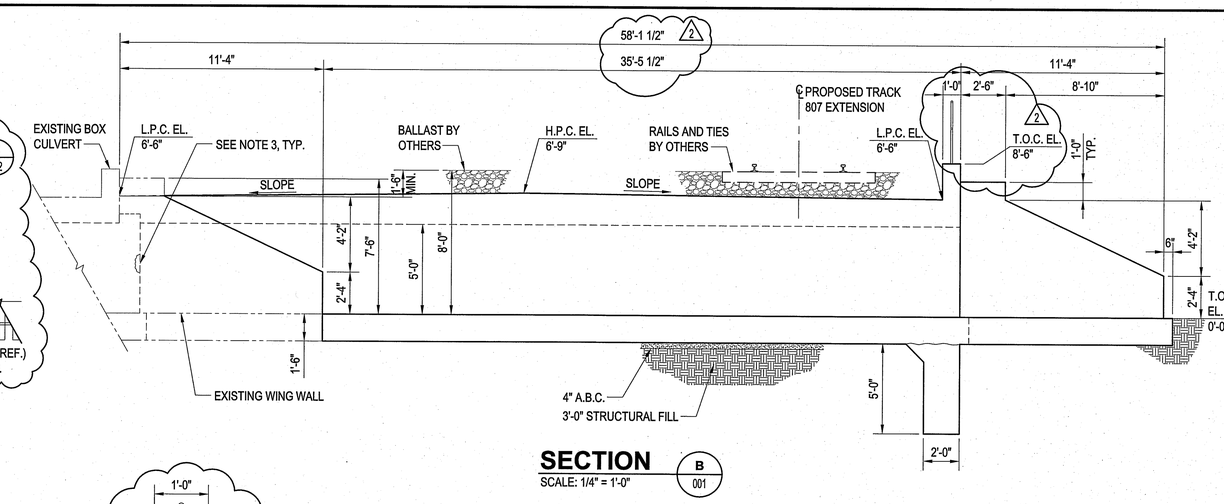

SECTION
SCALE: 1/4" = 1'-0"
B 001

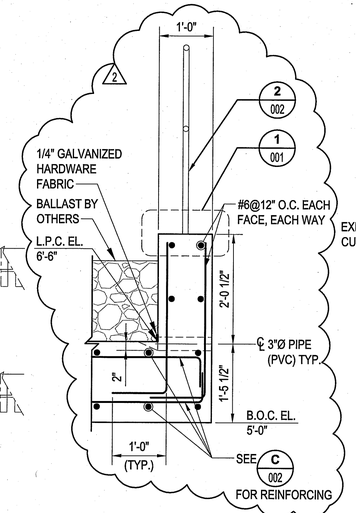

SECTION
SCALE: 3/4" = 1'-0"
D 001

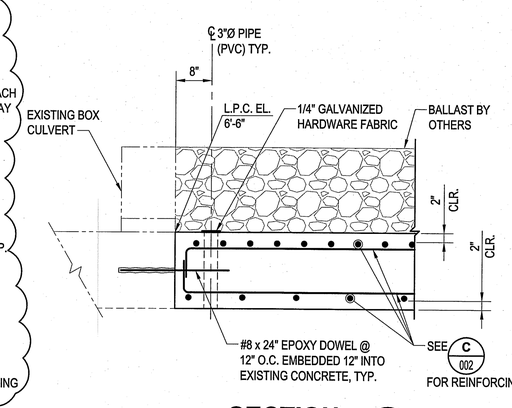

SECTION
SCALE: 3/4" = 1'-0"
E 001

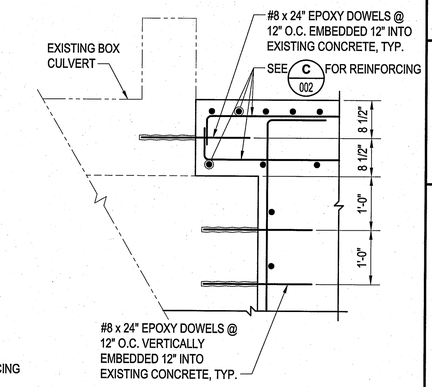

SECTION
SCALE: 3/4" = 1'-0"
G 001

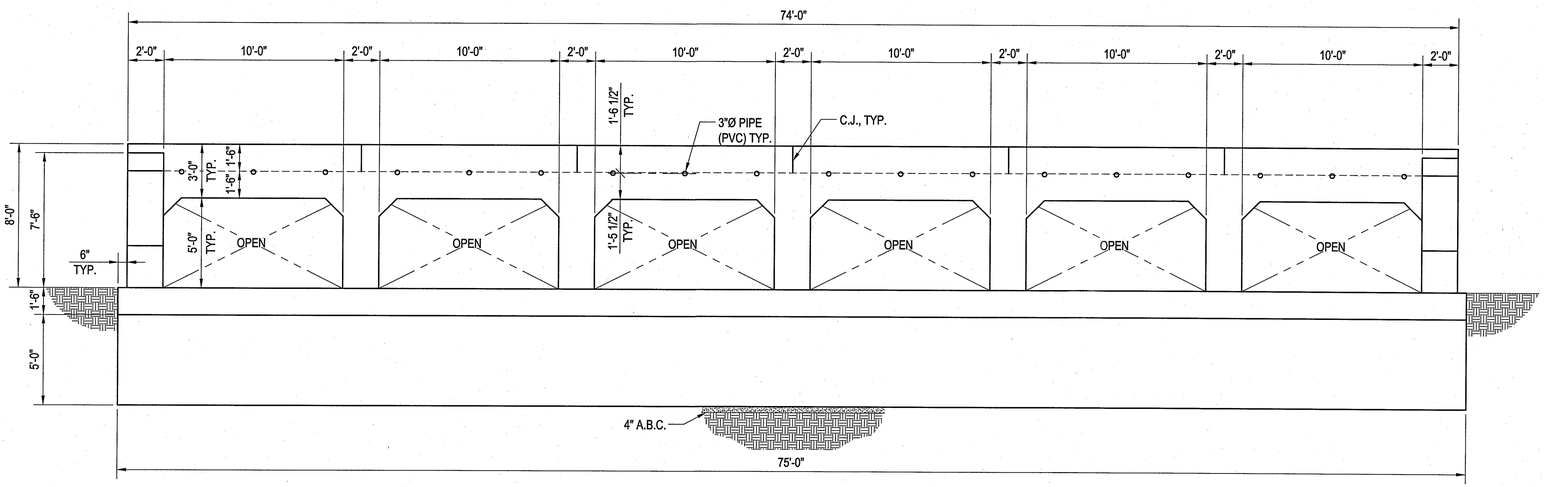

SECTION
SCALE: 1/4" = 1'-0"
A 001

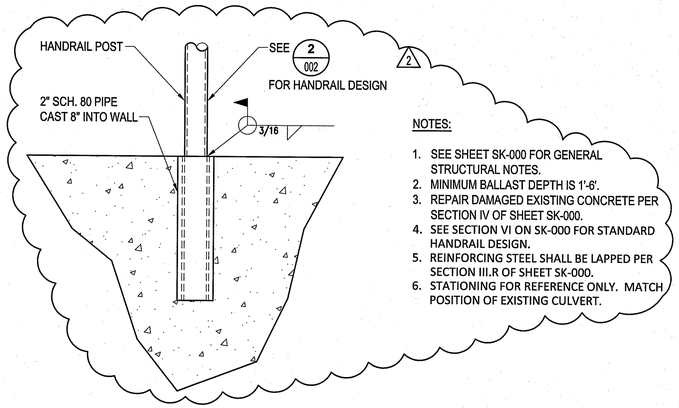

NOTES:

1. SEE SHEET SK-000 FOR GENERAL STRUCTURAL NOTES.
2. MINIMUM BALLAST DEPTH IS 1'-6'.
3. REPAIR DAMAGED EXISTING CONCRETE PER SECTION IV OF SHEET SK-000.
4. SEE SECTION VI ON SK-000 FOR STANDARD HANDRAIL DESIGN.
5. REINFORCING STEEL SHALL BE LAPPED PER SECTION III.R OF SHEET SK-000.
6. STATIONING FOR REFERENCE ONLY. MATCH POSITION OF EXISTING CULVERT.

DETAIL
SCALE: 3" = 1'-0"
1 001,002

APPROVED _____
FOR CONSTRUCTION

MULTI-BOX CULVERT PORT OF TUCSON

6964 E.Century Park Drive Tucson, Arizona 85756

Registered Professional Engineer (Civil) CERTIFICATE NO. 33207 PETER AUGUSTUS BRAHN Date Signed 3/2/15 ARIZONA U.S.A. Exp. 12/31/16

2051 W. SUNSET RD. SUITE 101
TUCSON, ARIZONA 85704
TEL. (520) 293-1488
FAX: (520) 293-8349
M3ENG.COM

ARCHITECTURE ENGINEERING CONSTRUCTION MANAGEMENT

Revisions

	Description	Date
1	APPR. FOR CONST.	12 FEB 15
2	U.P.R.R. COMMENTS	2 MAR 15
3		
4		
5		
6		

Drawn: NCR
Checked: NJB
Issue Date: 2 MAR 15

Drawing Title
PLAN, DETAILS AND SECTIONS

Sheet Number
SK-001

M3PN 150004

File: P:\2015\150004\Structural\SK-001.dwg LAST UPDATE:3/2/2015 4:19 PM BY: JM1987

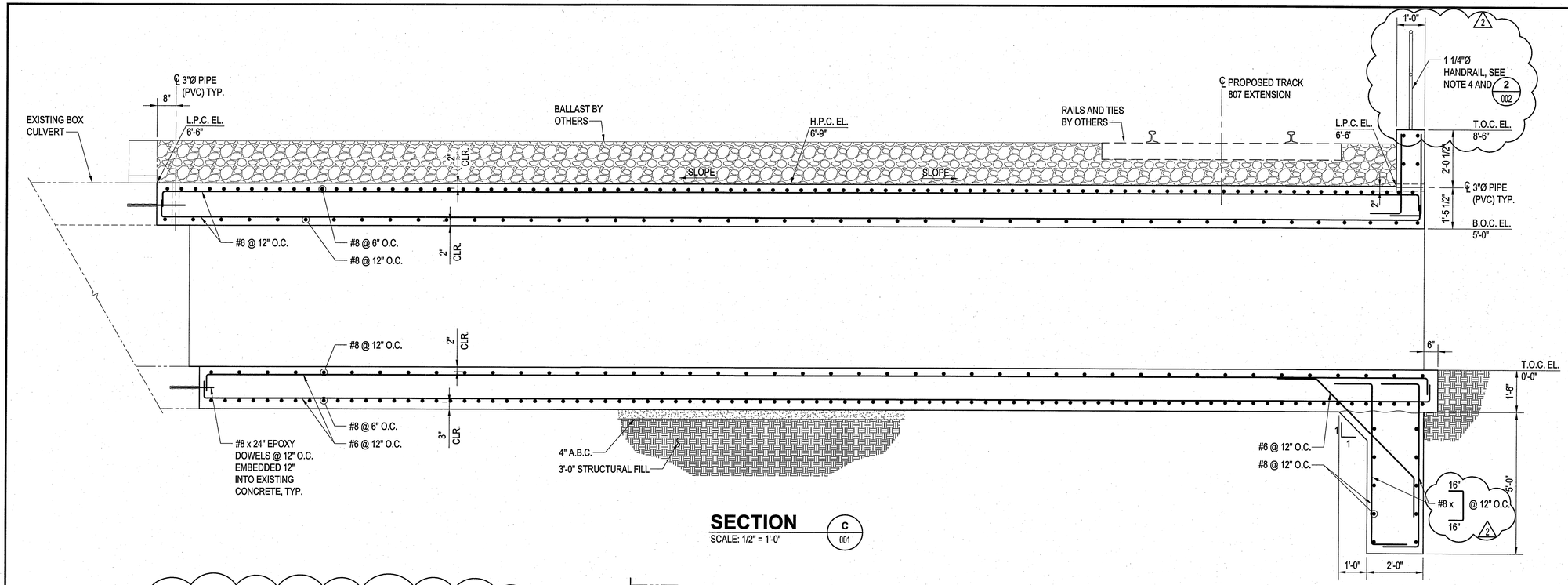

SECTION C/001

SCALE: 1/2" = 1'-0"

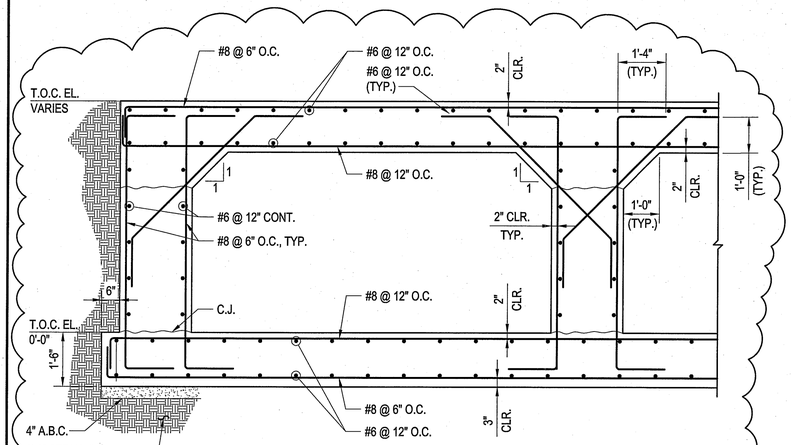

SECTION F/001

SCALE: 1/2" = 1'-0"

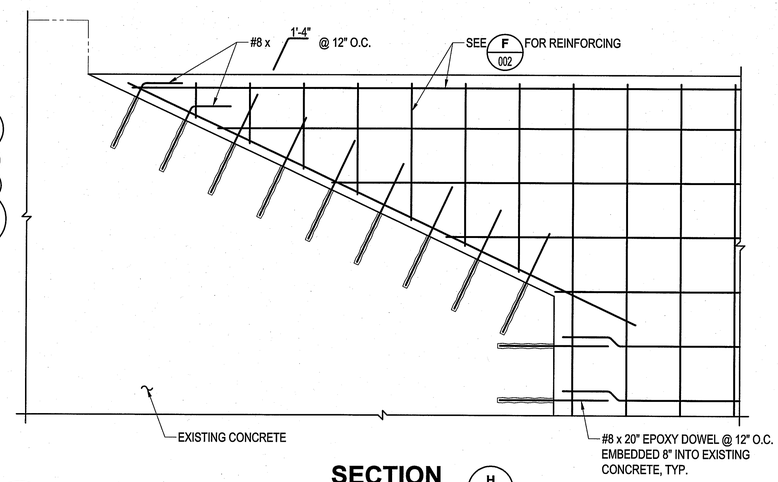

SECTION H/001

SCALE: 3/4" = 1'-0"

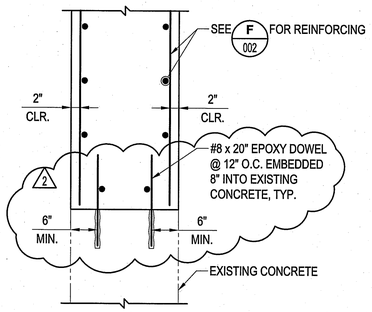

SECTION J/001

SCALE: 3/4" = 1'-0"

NOTE: INSTRUMENTATION SHALL NOT BE SUPPORTED OR ATTACHED IN ANY FASHION TO HANDRAIL. SEE SK-000 FOR FINISHING.

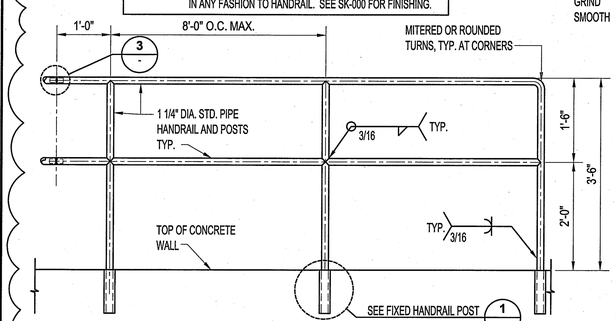

DETAIL 2/002

N.T.S.

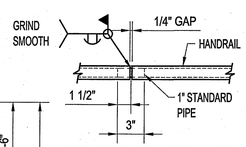

HANDRAIL SPLICE DETAIL 3

N.T.S.

NOTES:

1. SEE SHEET SK-000 FOR GENERAL STRUCTURAL NOTES.
2. MINIMUM BALLAST DEPTH IS 1'-6'.
3. REPAIR DAMAGED EXISTING CONCRETE PER SECTION IV OF SHEET SK-000.
4. SEE SECTION VI ON SK-000 FOR STANDARD HANDRAIL DESIGN.
5. REINFORCING STEEL SHALL BE LAPPED PER SECTION III.R.3 OF SHEET SK-000.

APPROVED _____
FOR CONSTRUCTION

MULTI-BOX CULVERT PORT OF TUCSON

6964 E.Century Park Drive Tucson, Arizona 85756

2051 W. SUNSET RD.
SUITE 101
TUCSON, ARIZONA 85704
TEL. (520) 293-1488
FAX. (520) 293-8349
M3ENG.COM

ARCHITECTURE
ENGINEERING
CONSTRUCTION MANAGEMENT

Revisions

	Description	Date
1	APPR. FOR CONST.	12 FEB 15
2	U.P.R.R. COMMENTS	2 MAR 15
3		
4		
5		
6		

Drawn: NCR
Checked: JDM
Issue Date: 2 MAR 15

Drawing Title
SECTIONS

Sheet Number
SK-002

M3PN 150004

File: P:\2015\150004\Structural\SK-002.dwg LAST UPDATE:3/2/2015 4:20 PM BY: JM1687