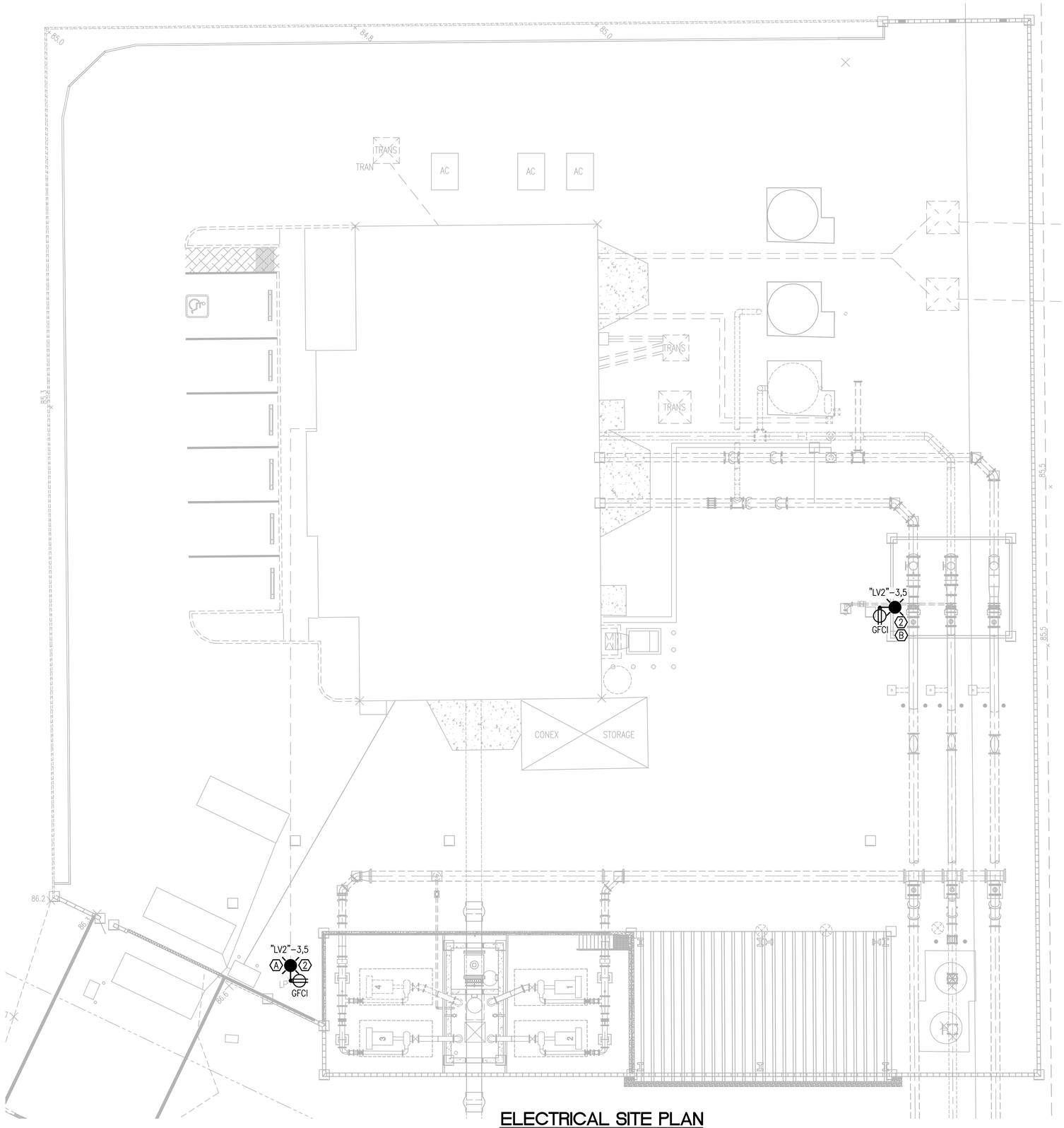

⬡KEYNOTES

A. REMOVE EXISTING POLE MOUNTED LIGHT FIXTURE AND BASE AND PROVIDE NEW FIXTURE AND BASE PER DETAIL 1/E100.

B. PROVIDE POLE BASE PER DETAIL 1/E100 (THIS SHEET). △1

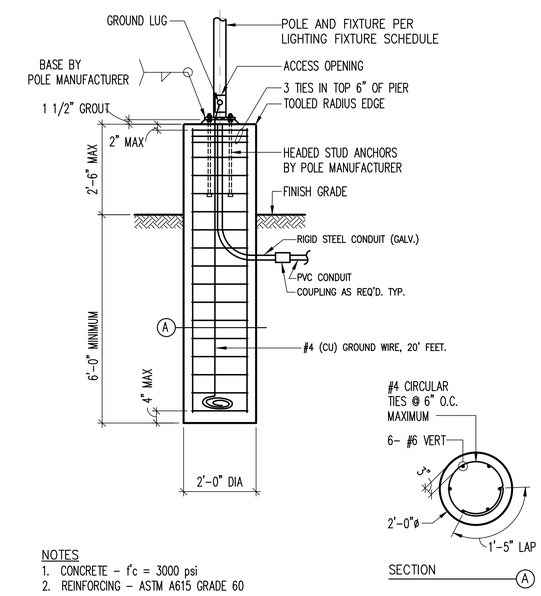

NOTES
1. CONCRETE - f'c = 3000 psi
2. REINFORCING - ASTM A615 GRADE 60

1 POLE BASE DETAIL
NOT TO SCALE

ELECTRICAL SITE PLAN
SCALE: 1"=10'-0"

N
W E
S
10' 0' 10'
SCALE: 1" = 10'

RCE
RICHARD CANNEY ENGINEERING
12381 E. FORT LOWELL ROAD
TUCSON, ARIZONA 85749
PHONE: (520) 615-8006
FAX: (520) 615-6495
E-MAIL: canney@att.net

NO.	REVISION	APPV'D.	DATE
△1	REVISIONS DURING BIDDING	RPC	7/18/16

Registered Professional Engineer (Electrical)
CERTIFICATE NO. 14502
RICHARD P. CANNEY
9/8/15
ARIZONA U.S.A.
EXPIRES 6/30/17

DESIGNED BY : R.P.C.
DRAWN BY : R.P.C.
CHK'D BY (DESIGN) : M.F.T.
CHK'D BY (FIELD ENGR) :
FIELD BOOK NO. :

PIMA COUNTY
REGIONAL WASTEWATER RECLAMATION DEPARTMENT
PIMA COUNTY
WASTEWATER RECLAMATION
201 North Stone Avenue * Tucson, Arizona 85701-1207 * Phone: (520) 740-6500

CONTINENTAL RANCH
REGIONAL PUMP STATION
UPGRADE DESIGN
ELECTRICAL SITE PLAN

R-2014-079
G-2014-078

Date: SEPT. 8, 2015

SCALE
HORIZ. : 1"=10'
VERT. : N/A

SHEET NO. : E100
71 OF 91

RCE JOB No. 13107
c:\2013\13107\Drawings\E100-SITE PLAN.dwg