CORONADO SCHOOL WALKWAY AND BIKEPATH

GENERAL DESCRIPTION OF PROJECT

The Coronado School Walkway and Bikepath
constructs new multiuse path, handrail, concrete landings,
concrete headers, cut-off walls & connector sidewalks

SAFE ROUTES TO SCHOOL PROJECT
TRACS NUMBER 999 PM TUC H8390 01C
FEDERAL ID NUMBER SRS-999-A (346)D

PROJECT NUMBER
4CORSC

PIMA COUNTY BOARD OF SUPERVISORS

RAMON VALADEZ, CHAIRMAN, DISTRICT 2

ALLY MILLER, DISTRICT 1 SHARON BRONSON, DISTRICT 3

RAY CARROLL, DISTRICT 4 RICHARD ELIAS, DISTRICT 5

PROJECT IN SUPERVISOR DISTRICT 1

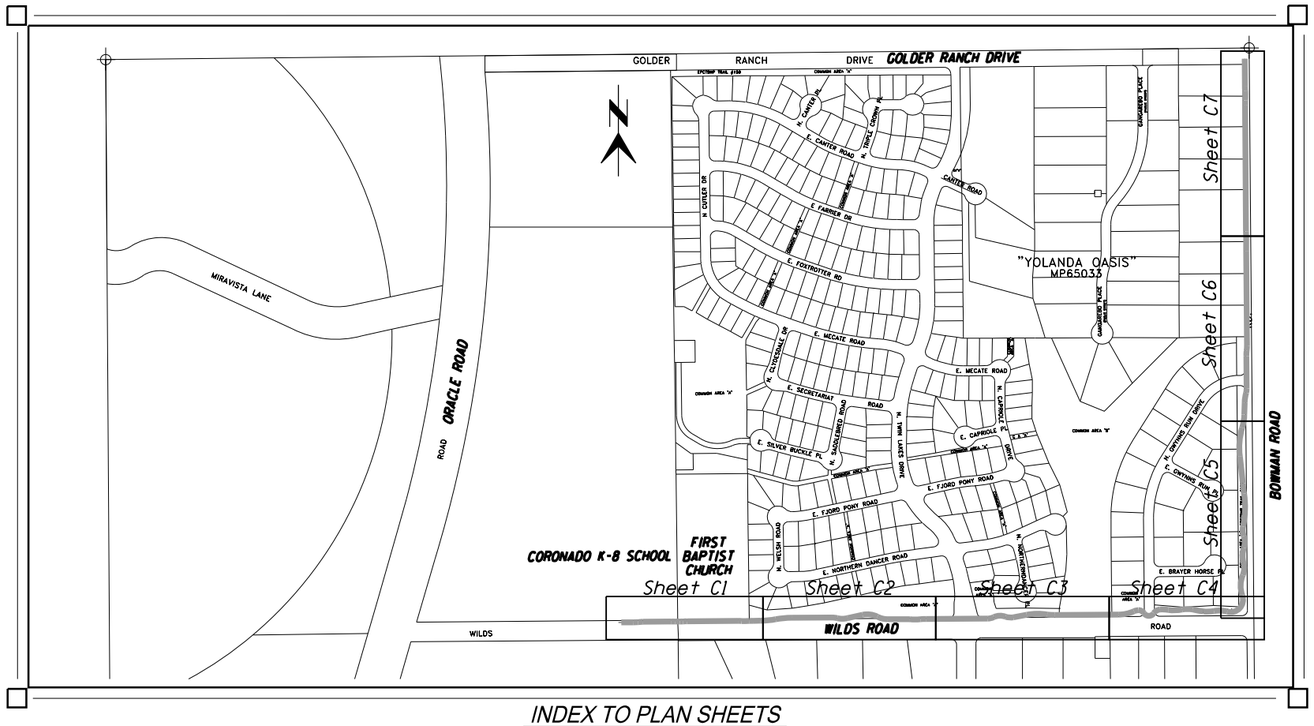

INDEX TO PLAN SHEETS
NOT TO SCALE

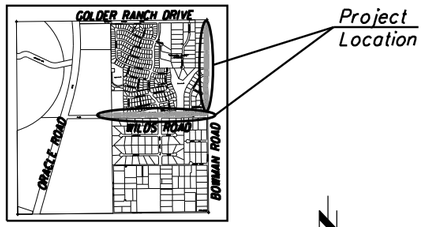

LOCATION MAP
NOT TO SCALE

Section 16
T-11-S, R-14E,
G & S R B & M
Pima County, Arizona

SHEET INDEX

PAGE NO.	SHEET NO.	DESCRIPTION
1	CS1	COVER SHEET
2	G1	GENERAL NOTES
3-4	DS1-DS2	TYPICAL SECTIONS & DETAILS
5	D1	DRAINAGE DETAIL SHEET
6-12	C1-C7	PATH PLANS

Arizona Blue Stake
1-800-STAKE-IT
1-800-782-5348
Call Two Working Days Before You Dig

Kimley-Horn and Associates, Inc. ©2013
333 E. WETMORE ROAD
Suite 280
Tucson, AZ 85705
(520) 615-9191

No.	Revisions	Engineer	Date

No.	As Built	Engineer	Date

PRELIMINARY
STAGE I
Review
NOT FOR CONSTRUCTION OR RECORDING

Pima County Department of Transportation
201 N. Stone Avenue Tucson, Arizona 85701
Phone Number: 740-6410
Priscilla S. Cornelio, P.E. Director

Reviewed by	Engineer	Date
Mgr. Transportation Engr.		
Mgr. Traffic Engr.		
Mgr. Field Engr.		

Approved: _____ 20__

Director

Project No. 4CORSC | Sheet No. CS1 of CS1 | Page No. 1 of 12

REVIEW SUBMITTAL MARCH 2013

File name: COVER.dgn

F.H.W.A. REGION	STATE	PROJECT NO.	SHEET NO.	TOTAL SHEETS	AS BUILT
9	ARIZ.	A(346)D		-	

TRACS NO.
H8390 01C

GENERAL CONSTRUCTION NOTES

1. CONSTRUCTION SHALL CONFORM TO THE PIMA COUNTY/CITY OF TUCSON STANDARD SPECIFICATIONS AND DETAILS FOR PUBLIC IMPROVEMENTS, 2003 EDITION AND PIMA COUNTY NATURAL RESOURCES PARKS AND RECREATION DEPARTMENT STANDARD SPECIFICATIONS AND DETAILS FOR PARK IMPROVEMENTS.

2. UTILITY LOCATIONS SHOWN ON PLANS WERE COMPILED BASED ON THE BEST INFORMATION AVAILABLE TO THE DEPARTMENT AND ARE NOT INTENDED TO BE A COMPLETE HISTORY, UTILITY LOCATIONS ARE NOT INTENDED TO BE EXACT OR COMPLETE. PRIOR TO COMMENCING CONSTRUCTION, THE CONTRACTOR SHALL VERIFY THE LOCATION OF ALL UTILITIES WITH THE APPROPRIATE ORGANIZATIONS. CONTACT "BLUE STAKE" AT 1-800-782-5348 TWO FULL WORKING DAYS PRIOR TO BEGINNING CONSTRUCTION (SATURDAYS AND SUNDAYS ARE NOT CONSIDERED WORKING DAYS.)

3. CONSTRUCTION ZONE TRAFFIC CONTROL SHALL CONFORM TO THE REQUIREMENTS OF THE "MANUAL ON UNIFORM TRAFFIC CONTROL DEVICES" 2003 EDITION, AND THE SPECIAL PROVISIONS. ALL ELEMENTS OF WORK WILL BE INCLUDED IN LUMP SUM PAY ITEM 7010005.

4. CONTRACTOR SHALL COMPLY WITH ALL APPLICABLE OCCUPATIONAL SAFETY AND HEALTH ADMINISTRATION REGULATIONS.

5. CONTRACTOR SHALL OBTAIN ALL PERMITS AND CLEARANCES REQUIRED BY ALL GOVERNMENTAL AGENCIES.

6. THE CONTRACTOR SHALL INSTALL ALL PERMANENT PAVEMENT MARKINGS AND ALL PERMANENT TRAFFIC CONTROL SIGNS IN CONFORMANCE WITH MUTCD MANUAL.

7. THE CONTRACTOR'S ATTENTION IS CALLED TO THE LIMITED AREA AVAILABLE ON THE SITE FOR EXCAVATION, EMBANKMENT AND OTHER CONSTRUCTION ACTIVITIES.

8. EXISTING CONDITIONS SHOWN ON PLAN SHEETS REFLECT CONDITIONS AS OF DECEMBER, 2012.

9. THE CONTRACTOR SHALL MAINTAIN ACCESS ALONG ALL PROJECT ROADWAYS DURING CONSTRUCTION. THE CONTRACTOR WILL NOT RESTRICT EMERGENCY VEHICLES, U.S. POSTAL DELIVERY, SOLID WASTE COLLECTIONS, AND/OR ACCESS TO THE ADJACENT PROPERTIES, EXCEPT AS APPROVED BY THE ENGINEER.

10. IT SHALL BE THE CONTRACTOR'S RESPONSIBILITY TO FURNISH, HAUL, AND APPLY ALL WATER REQUIRED FOR COMPACTION, AND FOR THE CONTROL OF DUST FROM CONSTRUCTION ACTIVITY. THE CONTRACTOR SHALL PROVIDE CLEAN, CLEAR WATER FOR USE IN CONSTRUCTION, COMPACTION, AND DUST CONTROL. THE COST OF THE WATER, AND APPLICATION OF THE WATER, SHALL BE CONSIDERED INCIDENTAL TO OTHER ITEMS OF WORK.

11. THE CONTRACTOR SHALL BE RESPONSIBLE FOR THE CARE, MAINTENANCE, REPAIR OR REPLACEMENT OF EXISTING IMPROVEMENTS IN THE WORK AREA WHICH HAVE BEEN REMOVED OR DAMAGED DURING THE COURSE OF CONSTRUCTION. ALL REPAIR, REPLACEMENT, OR CLEANUP SHALL BE DONE TO THE SATISFACTION OF THE OWNER.

12. OMISSIONS OR CONFLICTS BETWEEN VARIOUS ELEMENTS OF THE DRAWINGS, NOTES AND DETAILS SHALL BE BROUGHT TO THE ATTENTION OF THE ENGINEER AND RESOLVED BEFORE PROCEEDING WITH THE WORK.

13. ANY REVISIONS MADE TO THESE PLANS MUST BE APPROVED BY THE PIMA COUNTY DEPARTMENT OF TRANSPORTATION FIELD ENGINEERING DEPARTMENT, 740-2661 OR PIMA COUNTY POJECT MANGEMENT OFFICE PRIOR TO CONSTRUCTION.

14. A COPY OF THESE PLANS SHALL BE KEPT IN AN EASILY ACCESSIBLE LOCATION ON THE SITE AT ALL TIMES DURING CONSTRUCTION.

15. ANY EXCESS EXCAVATED MATERIAL SHALL BECOME THE PROPERTY OF THE CONTRACTOR AND SHALL BE REMOVED FROM PROJECT SITE BY THE CONTRACTOR.

16. DIMENSIONS SHALL NOT BE SCALED FROM DRAWINGS.

17. LAYOUT AND LIMITS OF GRADING TO BE STAKED IN FIELD UNDER SUPERVISION OF THE OWNERS REPRESENTATIVE.

18. IN THE EVENT THAT HUMAN REMAINS, INCLUDING HUMAN SKELETAL REMAINS, CREMATIONS, AND/OR CEREMONIAL OBJECTS AND FUNERARY OBJECTS ARE FOUND DURING EXCAVATION OR CONSTRUCTION , GROUND DISTURBING ACTIVITIES MUST CEASE IN THE IMMEDIATE VICINITY OF THE DISCOVERY. STATE LAWS ARS 41-865 AND ARS 41-844 , REQUIRE THAT THE ARIZONA STATE MUSEUM BE NOTIFIED OF THE DISCOVERY AT (520) 621-4795 SO THAT CULTURAL GROUPS WHO CLAIM CULTURAL OR RELIGIOUS AFFINITY TO THEM CAN MAKE APPROPRIATE ARRANGEMENTS FOR THE REPRESENTATION AND REBURIAL OF THE REMAINS. THE HUMAN REMAINS WILL BE REMOVED FROM THE SITE BY A PROFESSIONAL ARCHAEOLOGIST PENDING CONSULTATION AND REVIEW BY THE ARIZONA STATE MUSEUM AND THE CONCERNED CULTURAL GROUPS.

19. REGULATORY SIGNS WHICH ARE LOCATED IN CONFLICT WITH THE LINEAR PARK SHALL BE RELOCATED AS A PART OF THIS CONTRACT AT THE COUNTYS DIRECTION AND IN CONFORMANCE WITH PIMA COUNTY STANDARDS AND PAID FOR UNDER 6070220 REMOVE AND RELOCATE SIGNS, 6070010 SIGN POST (PERFORATED) (2S), 6070110 FOUNDATION FOR SIGN POST (PERFORATED).

20. ENGINEERING DIRECTIVE, ENG2006-09, APPLIES TO ANY PROJECT THAT REQUIRES TRENCHING WITHIN 6' HORIZONTAL, OR 2' VERTICAL, OF AN EXISTING PUBLIC SEWER MAIN. IT IS THE RESPONSIBILITY OF THE CONTRACTOR TO: (A) IDENTIFY AND INCLUDE ALL FLOW MANAGEMENT COSTS IN THE CONSTRUCTION BID. (B) PROVIDE A FLOW MANAGEMENT PLAN, THIRTY DAYS (30) PRIOR TO A PRE-CONSTRUCTION MEETING WITH WASTEWATER FIELD ENGINEERING, PRECEDING ANY WORK THAT MAY AFFECT A LIVE SEWER. REFER TO DETAIL WWM A-5 FOR FLOW MANAGEMENT PLAN REQUIREMENTS . CALL REGIONAL WASTEWATER FIELD ENGINEERING AT (520) 740-2651 REGARDING ALL QUESTIONS INVOLVING PREPARATION OF FLOW MANAGEMENT PLANS.

21. HOUSE OR BUSINESS CONNECTION SEWERS (HCS OR BCS) ARE NOT PART OF THE PUBLIC SANITARY SEWER CONVEYANCE SYSTEM. PRIVATE CONNECTION SEWERS CONSTRUCTED PRIOR TO JANUARY 2006 ARE NOT REQUIRED TO BE BLUE STAKED. ANY HCS/BCS ENCOUNTER DURING CONSTRUCTION SHALL BE PROTECTED, REPAIRED OR REROUTED AS THE SITUATION DICTATES (COT/PC SD WWM 404) , AT NO EXPENSE TO THE PROPERTY OWNER OR THE PIMA COUNTY.

22. SWPPP MEASURES SHALL BE INSTALLED SO AS TO PREVENT ALL STORM WATER, CONSTRUCTION WATER, FUELS, CHEMICALS, OR LIQUIDS TO BE DIRECTED INTO OR ONTO ANY SANITARY SEWER FACILITIES. PROTECTION OF SANITARY SEWER FACILITIES SHALL BE A PART OF THE APPROVED CONSTRUCTION SWPPP AND BEST MANAGEMENT PRACTICES. PROTECTION DEVISED SHALL BE INSTALLED AND MAINTAINED AROUND ALL POTENTIALLY AFFECTED SANITARY SEWER FACILITIES WITHIN THE PROJECT LIMITS. ADDITIONAL MEASURES SHALL INCLUDE BUT NOT BE LIMITED TO THE USE OF RAIN STOPPERS AND WATERPROOF MANHOLE COVERS AS DEEMED NECESSARY BY THE PIMA COUNTY REGIONAL WASTEWATER RECLAMATION DEPARTMENT.

23. ALL GRADED AREAS SHALL BE RAKED SMOOTH AND COMPACTED TO NO LESS THAN SHOWN ON THE PLANS.

24. CONTRACTOR SHALL PROVIDE SHOP DRAWINGS FOR ALL CONSTRUCTION ELEMENTS NOT FULLY DETAILED IN THE PIMA COUNTY / CITY OF TUCSON STANDARDS SPECIFICATIONS AND DETAILS FOR PUBLIC IMPROVEMENTS, THESE SHEETS, THE SPECIAL PROVISIONS, OR IN PIMA COUNTY NATURAL RESOURCES PARKS & RECREATION STANDARD SPECIFICATIONS AND DETAILS FOR PARK DEVELOPMENT.

25. EXISTING SEWER MANHOLES IN THE WORK ZONE OF THE PATHS SHALL BE ADJUSTED, COVERED, COLLARD AND FRAMED PER WWM STD. DETAILS 212,213 AND 214.

26. CLEARING AND GRUBBING IS TO BE CONDUCTED IN CONFORMANCE WITH PIMA COUNTY PUBLIC WORKS STANDARD OPERATING PROCEDURE NO. 2009-02. PRE-EMERGENT HERBICIDE SHALL BE APPLIED TO THE SOIL PRIOR TO INSTALLATION OF THE MULTI-USE PATH AND ALL GRADED AREAS EXCEPT AREAS TO RECIEVE SEEDING. BUFFELGRASS REMOVAL AND PREEMERGENT HERBACIDE ARE TO BE CONSIDERED INCIDENTAL TO ITEM 2010001.

27. THE CONTRACTOR SHALL PREPARE AND OBTAIN APPROVAL OF A GENERAL EROSION CONTROL PLAN, PAID UNDER LUMP SUM BID ITEM 8100001, THAT IS COMPLETE WITH BMP INSTALLATION SCHEDULE, BMP PLACEMENT SCHEMATIC(S), SEEDING APPLICATION OF LOW GROWTH MIX, AND BMP REMOVAL SCHEDULE. THE PLAN SHALL SHOW WATTLE LOCATIONS, MITIGATION AROUND STAGING AREA, AND MITIGATION AROUND ANY STOCKPILES. BMP INSTALLATION SHALL BE IN ACCORDANCE WITH THE ARIZONA DEPARTMENT OF TRANSPORTATION EROSION/SEDIMENT CONTROL AND WATER QUALITY PROTECTION DETAILS. THIS PAY ITEM ALSO INCLUDES THE MATERIALS, INSTALLATION, MAINTENANCE, AND REMOVAL OF ALL BMP'S. THIS ITEM ALSO INCLUDES THE APPLICATION OF SEEDING.

28. CORONADO ENGINEERING DESIGN SURVEY PROVIDED BY URBAN ENGINEERING DECEMBER 5, 2012.

29. THIS PATHWAY IS INTENDED TO BE CONSTRUCTED AT GRADE WHERE PROFILE IS NOT PROVIDED. EARTHWORK TO ACHIEVE CROSS SLOPE AND CONTINUOUS GRADE WITHOUT PONDING IS CONSIDERED INCIDENTAL AND SHOULD BE CAPTURED IN BID ITEMS 2050001, 2050002, AND 9300113.

30. THE CONTRACTOR SHALL STAKE THE HORIZONTAL ALIGNMENT FOR THE PATH FOR REVIEW BY PIMA COUNTY AND APPROVAL BY THE ENGINEER PRIOR TO COMMENCEMENT OF ANY GRADING WORK.

31. ALL STATION/OFFSETS ARE BASED ON AC PATHWAY CENTERLINE CONTROL.

Priscilla S. Cornelio, P.E., Director

		Date
Designed	O. Tapia	03/2013
Drawn	O. Tapia	03/2013
Checked	B. Beenken	03/2013
Proj. Engr.	B. Beenken	03/2013

No.	Revision Description	Engineer	Date

PRELIMINARY
STAGE I
Review
NOT FOR CONSTRUCTION OR RECORDING

Kimley-Horn and Associates, Inc. ©2013
333 East Wetmore Road
Suite 280
Tucson, AZ 85705
(520) 615-9191

Pima County Department of Transportation

CORONADO SCHOOL
WALKWAY AND BIKEPATH
GENERAL NOTES

Scales: Horiz. N/A, Vert. N/A

Sheet G1 of G1

F.H.W.A. REGION	STATE	PROJECT NO.	SHEET NO.	TOTAL SHEETS	AS BUILT
9	ARIZ.	A(346)D		-	

TRACS NO.
H8390 01C

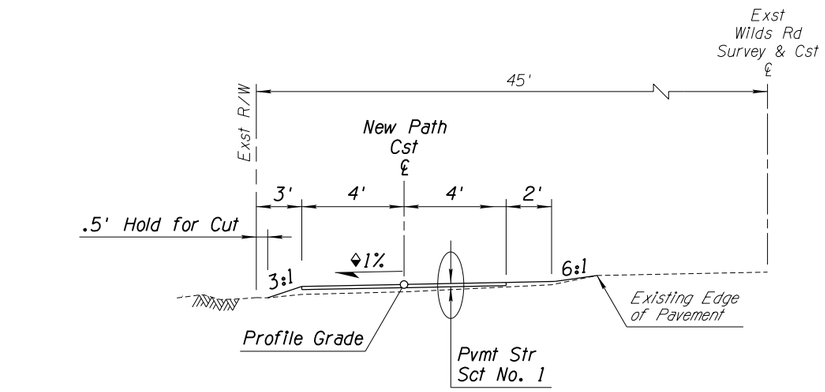

TYPICAL PATH SECTION

Sta 11+47.77 to Sta 15+43.62 (1% toward R/W)
◆ Sta 16+20.01 to Sta 17+00.00 (1% away from R/W)

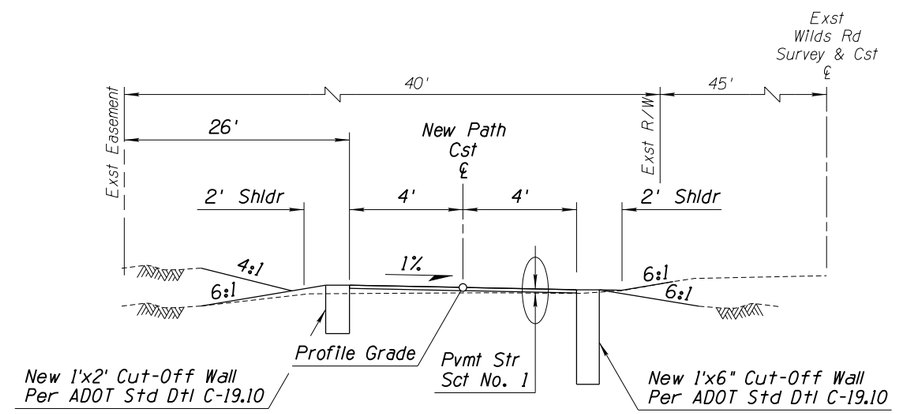

TYPICAL PATH SECTION

Sta 31+03.00 to Sta 34+20.00

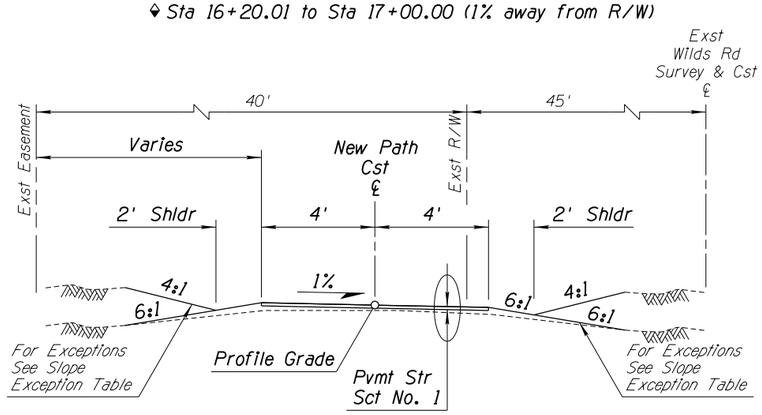

TYPICAL PATH SECTION

Sta 17+00.00 to Sta 23+29.07
Sta 28+16.62 to Sta 31+03.00
Sta 34+20.00 to Sta 35+24.48
Sta 35+62.84 to Sta 39+77.00

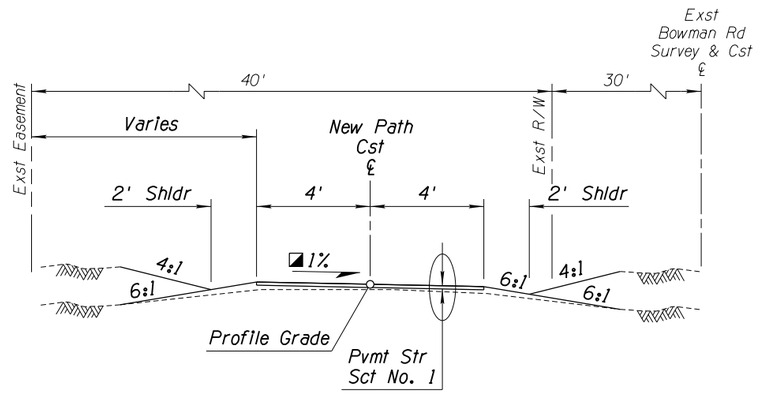

TYPICAL PATH SECTION

Sta 39+77.00 to Sta 45+00.00
◪ Sta 45+00.00 to Sta 49+00.00 (1% toward Easement)
Sta 49+00.00 to Sta 50+15.88
Sta 50+61.09 to Sta 51+75.00

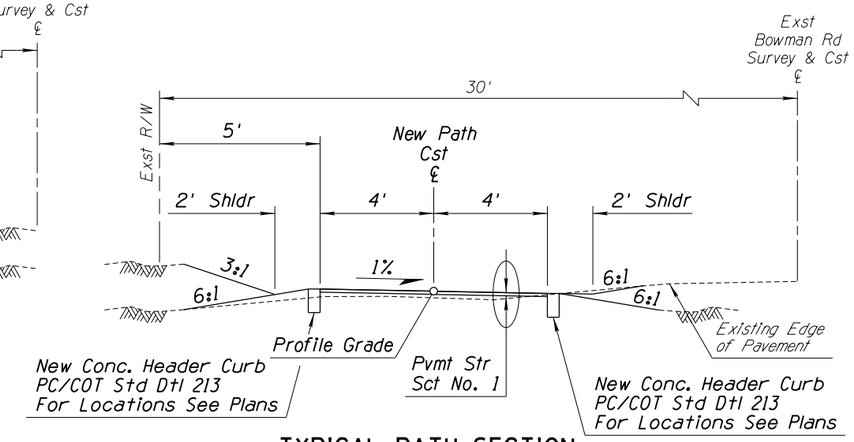

TYPICAL PATH SECTION

Sta 52+38.00 to Sta 64+90.19

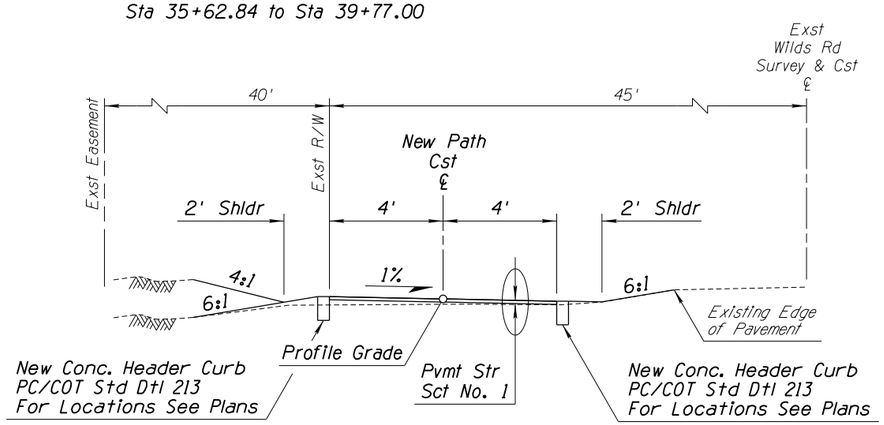

TYPICAL PATH SECTION

Sta 23+29.07 to Sta 26+33.90
Sta 27+41.80 to Sta 28+16.62

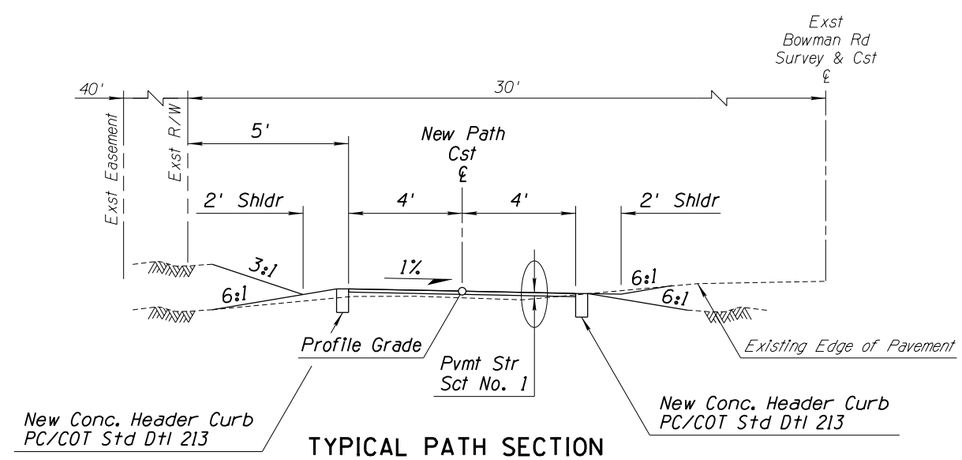

TYPICAL PATH SECTION

Sta 51+75.00 to Sta 52+38.00

Call at least two full working days before you begin excavation.
ARIZONA 811
ARIZONA BLUE STAKE, INC.
Dial 8-1-1 or 1-800-STAKE-IT (782-5348)

Priscilla S. Cornelio, P.E., Director
Pima County Department of Transportation

		Date
Designed	D. Tapia	03/2013
Drawn	D. Tapia	03/2013
Checked	B. Beenken	03/2013
Proj. Engr.	B. Beenken	03/2013

No.	Revision Description	Engineer	Date

PRELIMINARY
STAGE I
Review
NOT FOR CONSTRUCTION OR RECORDING

Kimley-Horn and Associates, Inc. ©2013
333 East Wetmore Road
Suite 280
Tucson, AZ 85705
(520) 615-9191

CORONADO SCHOOL WALKWAY AND BIKEPATH TYPICAL SECTIONS

Scales	Horiz. N/A	Sheet DS1 of DS2	3 of 12
	Vert. N/A		

F.H.W.A. REGION	STATE	PROJECT NO.	SHEET NO.	TOTAL SHEETS	AS BUILT
9	ARIZ.	A(346)D		-	

TRACS NO.
H8390 01C

1. CONCRETE LANDING CONTROL POINT SEE PLANS FOR LOCATION
2. DETECTABLE WARNING STRIP 6' X 2' (TYP)
3. CLASS "B" CONCRETE (2,500 PSI) ROUGH BROOM FINISH USE RIPPLE PATTERN (TYP)
4. SEE PLANS FOR RADIUS.
5. CONCRETE HEADER PER PAG STD. DTL. 213

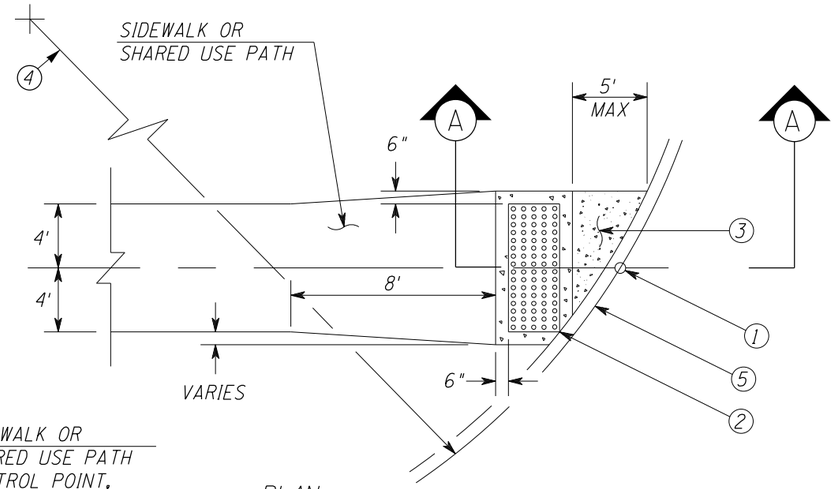

PLAN

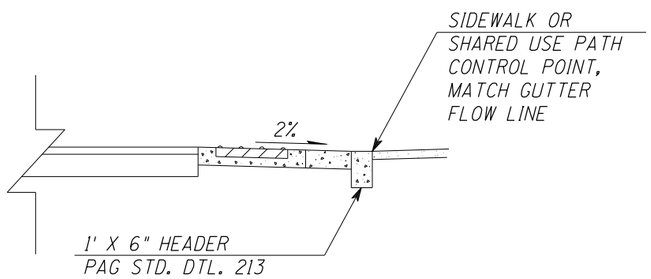

PROFILE

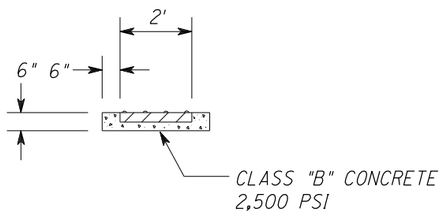

A SECTION

BASIS OF BEARING

Basis of bearings is the geodetic bearing between the center of Section 16 and the east 1/4 corner, as shown. Said bearing being N89°36'15"E.

BASIS OF ELEVATION

All coordinates are in international feet and all elevations are in NAVD88 Datum. Coordinates were derived from State Plane, Arizona Central. A combination factor was applied to achieve ground coordinates.

HORIZONTAL AND VERTICAL CONTROL

PIMA COUNTY D.O.T. CITY OF TUCSON GEODETIC CONTROL POINTS
STATE PLANE NORTHING = (SURFACE + 500,000) * (0.9998652170)
STATE PLANE EASTING = (SURFACE + 1,000,000) * (0.9998652170)
HORIZONTAL PER NAD 83 VERTICAL PER NAVD 88 CENTRAL ZONE

PT#	NORTHING	EASTING	ELEVATION	DESCRIPTION
5	39211.236	10500.023	3058.90	BCSM @ 1/16 COR. BOWMAN RD.
6	37877.807	9180.015	3040.43	BCSM @ CENTERLINE
7	37883.515	10030.282	3041.79	BCSM @ CENTERLINE
61	37868.692	7868.484	3040.43	BCSM @ CENTER SECTION 16
64	40522.601	7835.211	3070.51	1-1/2" ACP @ N. 1/4 COR. SEC. 16
1171	40535.474	10489.841	3072.74	1/2" REBAR @ N.E. COR. SEC. 16
1172	37886.944	10510.273	3045.72	1/2" REBAR @ E. 1/4 COR. SEC. 16
201	40476.619	5242.690	3046.66	GEODETIC CONTROL POINT 4J09
202	35191.557	5273.568	2982.31	GEODETIC CONTROL POINT 4N09

THESE CONTROL POINTS (#201 & #202) WERE USED AS THE PROJECT BENCHMARKS, ACCORDING TO THE NAVD88 ORTHOMETRIC HEIGHTS AS PUBLISHED.

FILL SLOPE EXCEPTION TABLE

Station	Side	Slope Control
33+69 to 35+24	Rt	3:1
35+62 to 36+40	Rt	3:1

CUT SLOPE EXCEPTION TABLE

Station	Side	Slope Control
17+00 to 18+50	Lt	3:1
33+69 to 35+24	Lt	3:1
35+62 to 36+40	Lt	3:1

GENERAL NOTES:

1. SEE PAG STD. DTL. 207, SHEET 8, FOR ADDITIONAL CONSTRUCTION NOTES.
2. SEE PAG STD. DETAIL 200 FOR JOINT REQUIREMENTS.
3. SEE PROJECT PLANS FOR CONCRETE LANDING LOCATION. CONCRETE LANDING SHOULD BE ORIENTED TO ALIGN WITH THE CROSSWALK OR STOP BAR. MEDIAN REFUGE AREA, AND WITH THE OPPOSITE LANDING IN THE DIRECTION OF PEDESTRIAN TRAVEL.
4. PAID FOR UNDER BID ITEM 9080292.

DETAIL A

CONCRETE LANDING WITH DETECTABLE WARNING STRIP

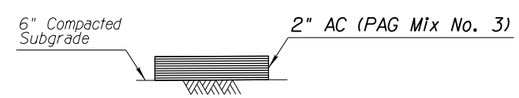

Total Thickness = 2"

SECTION NO. 1

AC Path

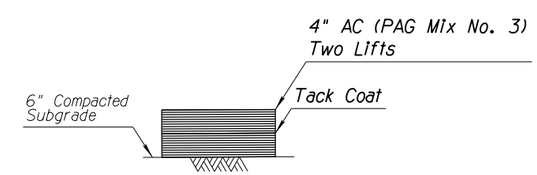

Total Thickness = 4"

SECTION NO. 1

Driveways

Call at least two full working days before you begin excavation.
ARIZONA 811
ARIZONA BLUE STAKE, INC.
Dial 8-1-1 or 1-800-STAKE-IT (782-5348)

Priscilla S. Cornelio, P.E., Director

Designed	D. Tapia	03/2013
Drawn	D. Tapia	03/2013
Checked	B. Beenken	03/2013
Proj. Engr.	B. Beenken	03/2013

No.	Revision Description	Engineer	Date

PRELIMINARY
STAGE I
Review
NOT FOR CONSTRUCTION OR RECORDING

Kimley-Horn and Associates, Inc. ©2013
333 East Wetmore Road
Suite 280
Tucson, AZ 85705
(520) 615-9191

Pima County Department of Transportation

CORONADO SCHOOL
WALKWAY AND BIKEPATH
DESIGN SHEET

Scales Horiz. N/A Vert. N/A | Sheet DS2 of DS2 | 4 of 12

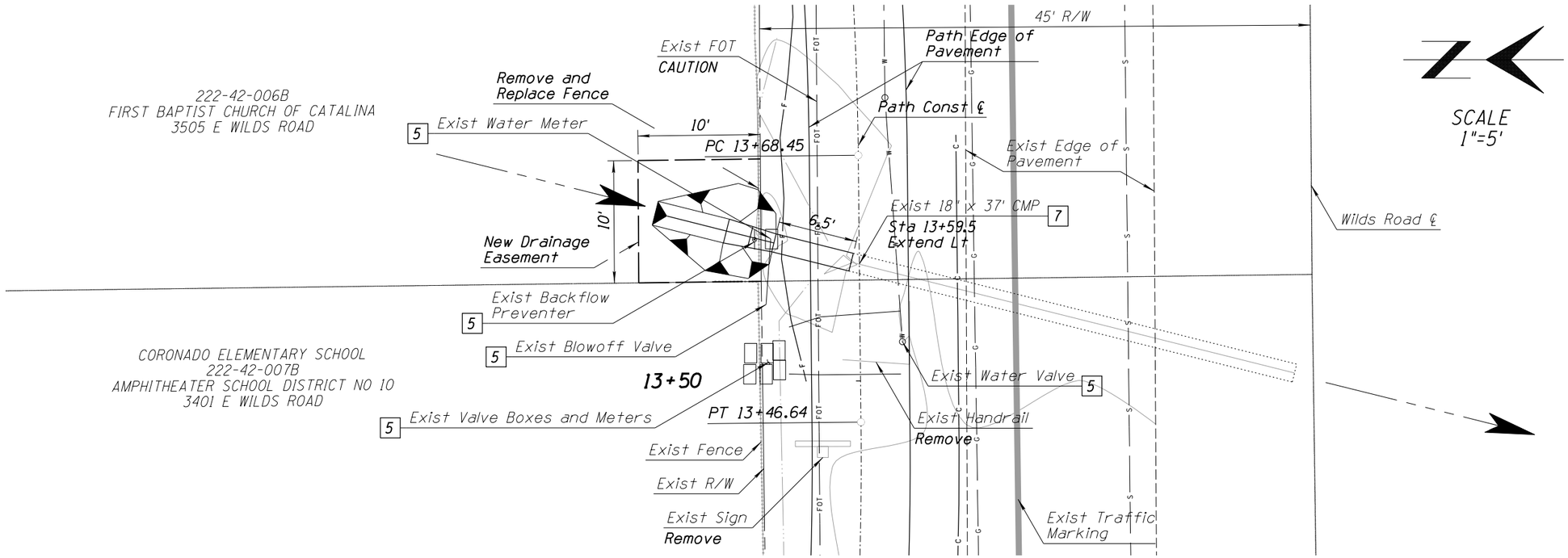

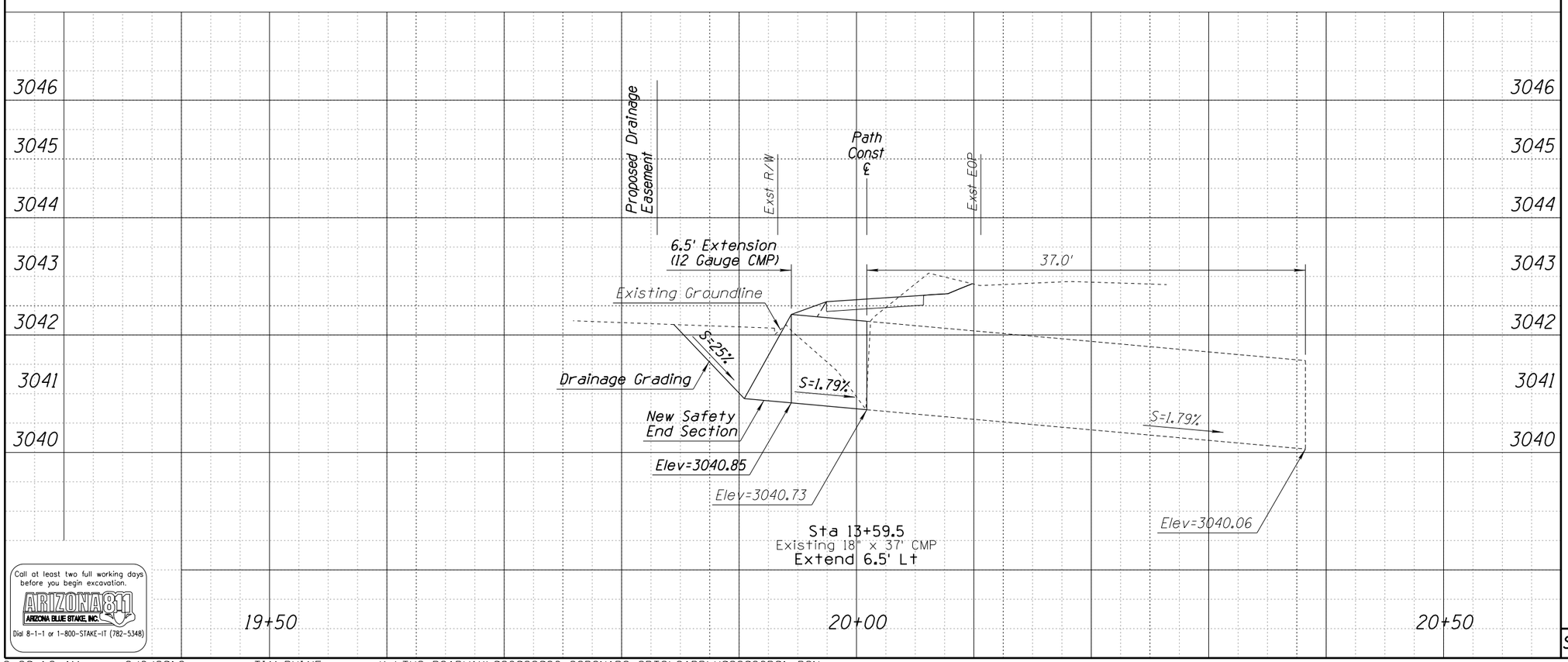

Call at least two full working days before you begin excavation.
ARIZONA 811
ARIZONA BLUE STAKE, INC.
Dial 8-1-1 or 1-800-STAKE-IT (782-5348)

F.H.W.A. REGION	STATE	PROJECT NO.	SHEET NO.	TOTAL SHEETS	AS BUILT
9	ARIZ.	A(346)D		-	

TRACS NO.
H8390 01C

NOTES:

1. Handrail Per PC/COT Std Dtl 105
2. Construct Concrete Header Per PC/COT Std Dtl 213
3. Concrete Sidewalk Per PC/COT Std Dtl 200
4. Install Cut-Off Wall
5. Water Valve and Meter to be Adjusted by Others
6. Install New Concrete Landing with Detectable Warning Strips
7. Install Pipe (18") and Flared End Section
8. Driveway Pavement Per Struc Sec No 2
9. Cut and Remove Exist Conc Header. Tack and Join Path AC Paving

Priscilla S. Cornelio, P.E., Director

		Date
Designed	D. Tapia	03/2013
Drawn	D. Tapia	03/2013
Checked	B. Beenken	03/2013
Proj. Engr.	B. Beenken	03/2013

No.	Revision Description	Engineer	Date

PRELIMINARY
STAGE I
Review
NOT FOR CONSTRUCTION OR RECORDING

Kimley-Horn and Associates, Inc. ©2013
333 East Wetmore Road
Suite 280
Tucson, AZ 85705
(520) 615-9191

Pima County Department of Transportation

CORONADO SCHOOL WALKWAY AND BIKEPATH DRAINAGE DETAIL

Scales: Horiz. 1"=5' Vert. 1"=1'

Sheet D1 of D1

5 of 12

9:20:13 AM 3/6/2013 TIM.RHINE K:\TUC_ROADWAY\098022036_CORONADO SRTS\CADD\H022036D01.DGN

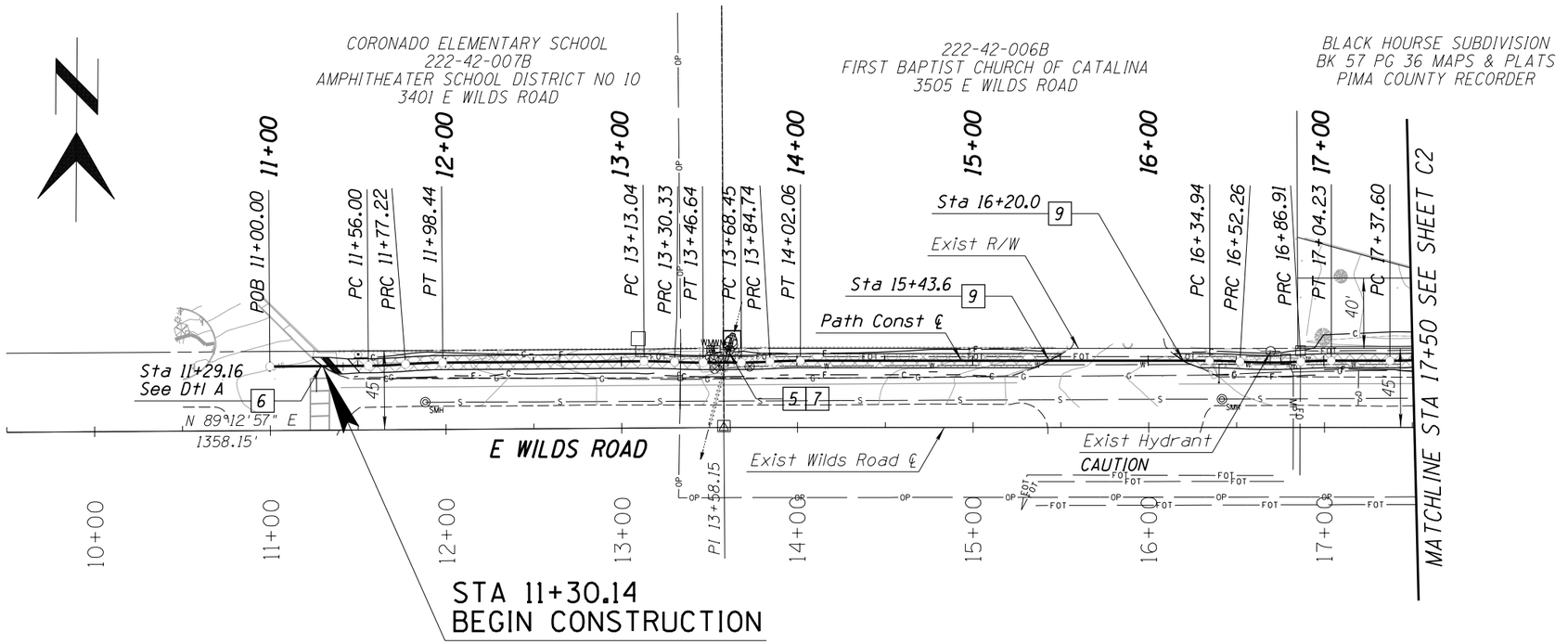

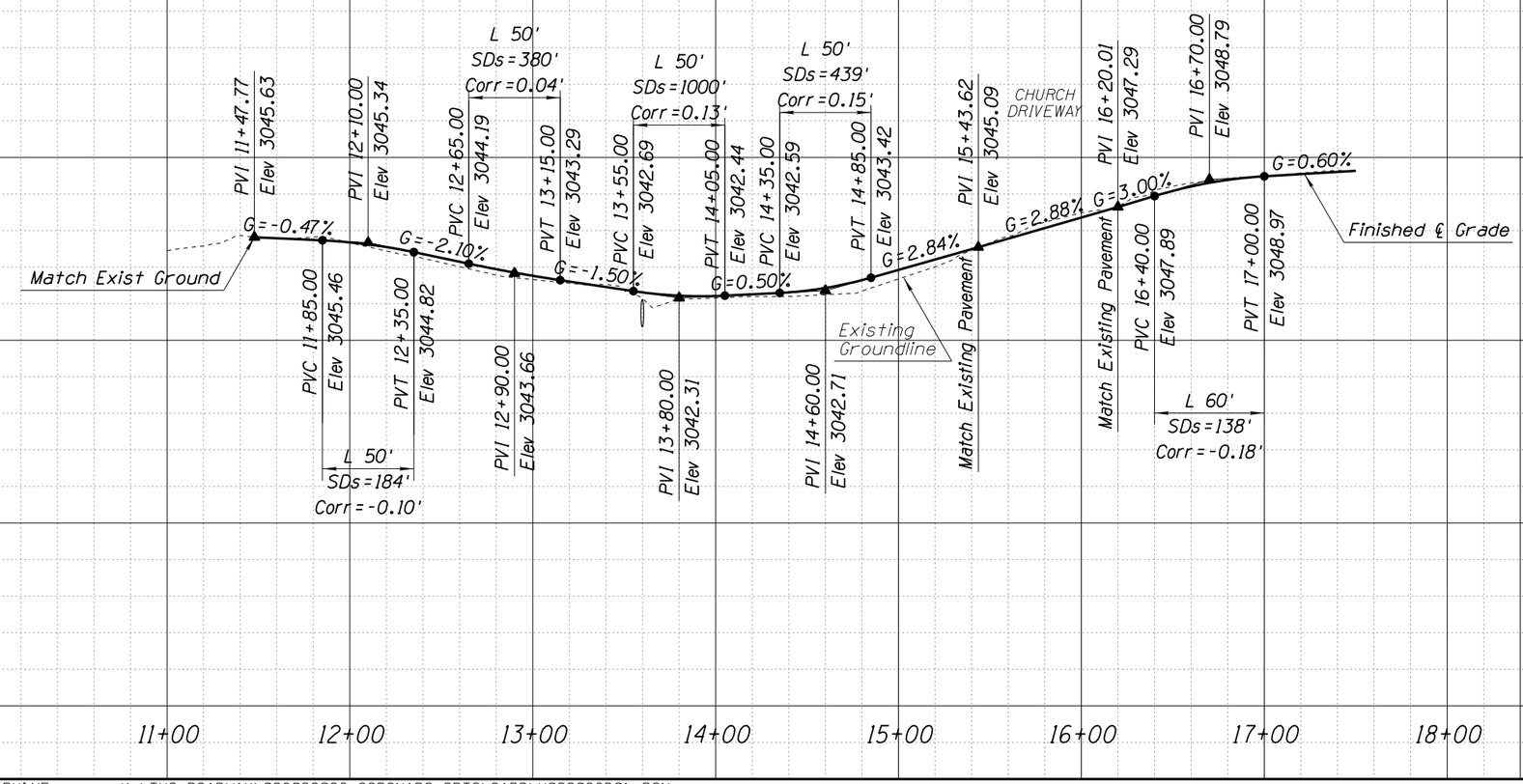

F.H.W.A. REGION	STATE	PROJECT NO.	SHEET NO.	TOTAL SHEETS	AS BUILT
9	ARIZ.	A(346)D		-	

TRACS NO.
H8390 01C

NOTES:

1. Handrail Per PC/COT Std Dtl 105
2. Construct Concrete Header Per PC/COT Std Dtl 213
3. Concrete Sidewalk Per PC/COT Std Dtl 200
4. Install Cut-Off Wall
5. Water Valve and Meter to be Adjusted by Others
6. Install New Concrete Landing with Detectable Warning Strips
7. Install Pipe (18") and Flared End Section
8. Driveway Pavement Per Struc Sec No 2
9. Cut and Remove Exist Conc Header. Tack and Join Path AC Paving

Priscilla S. Cornelio, P.E., Director

		Date
Designed	O. Tapia	03/2013
Drawn	O. Tapia	03/2013
Checked	B. Beenken	03/2013
Proj. Engr.	B. Beenken	03/2013

No.	Revision Description	Engineer	Date

PRELIMINARY
STAGE I
Review
NOT FOR CONSTRUCTION OR RECORDING

Kimley-Horn and Associates, Inc. ©2013
333 East Wetmore Road
Suite 280
Tucson, AZ 85705
(520) 615-9191

Pima County Department of Transportation

CORONADO SCHOOL WALKWAY AND BIKEPATH PLAN AND PROFILE 11+00 TO 17+50

Scales: Horiz. 1"=40' Vert. 1"=4'

Sheet C1 of C7

6 of 12

Call at least two full working days before you begin excavation.
ARIZONA 811
ARIZONA BLUE STAKE, INC.
Dial 8-1-1 or 1-800-STAKE-IT (782-5348)

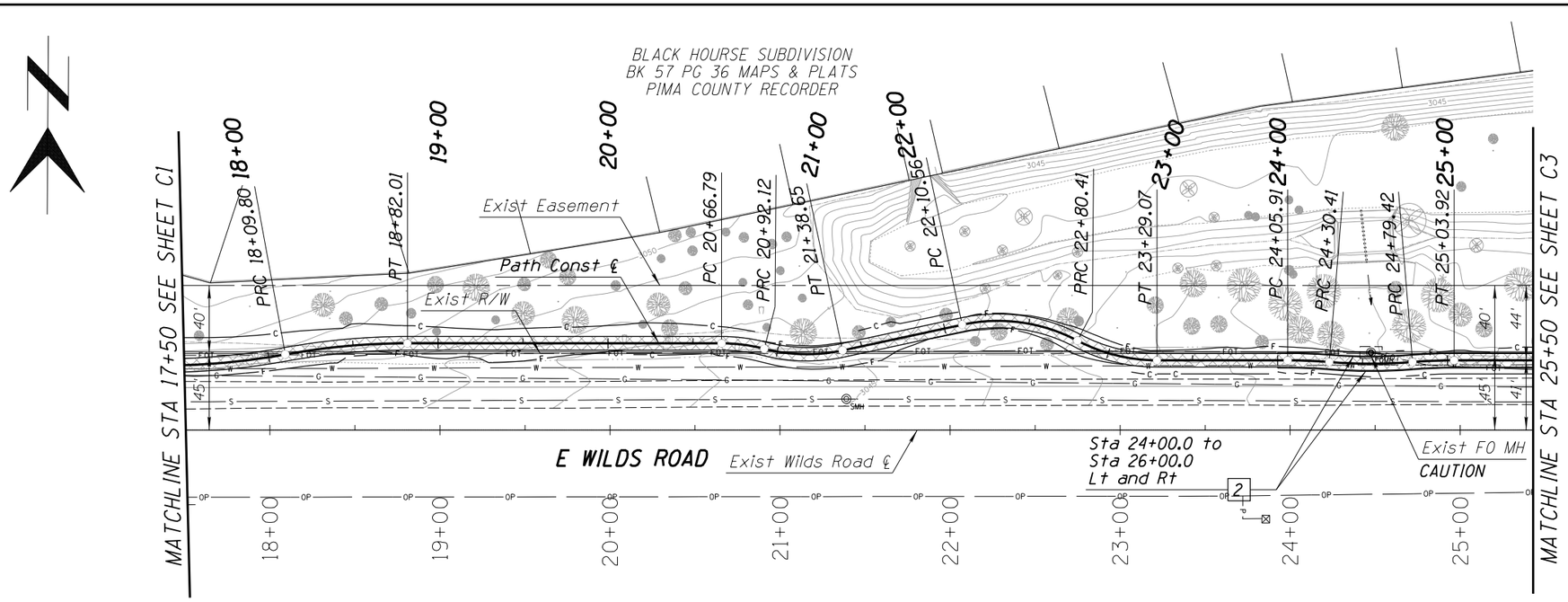

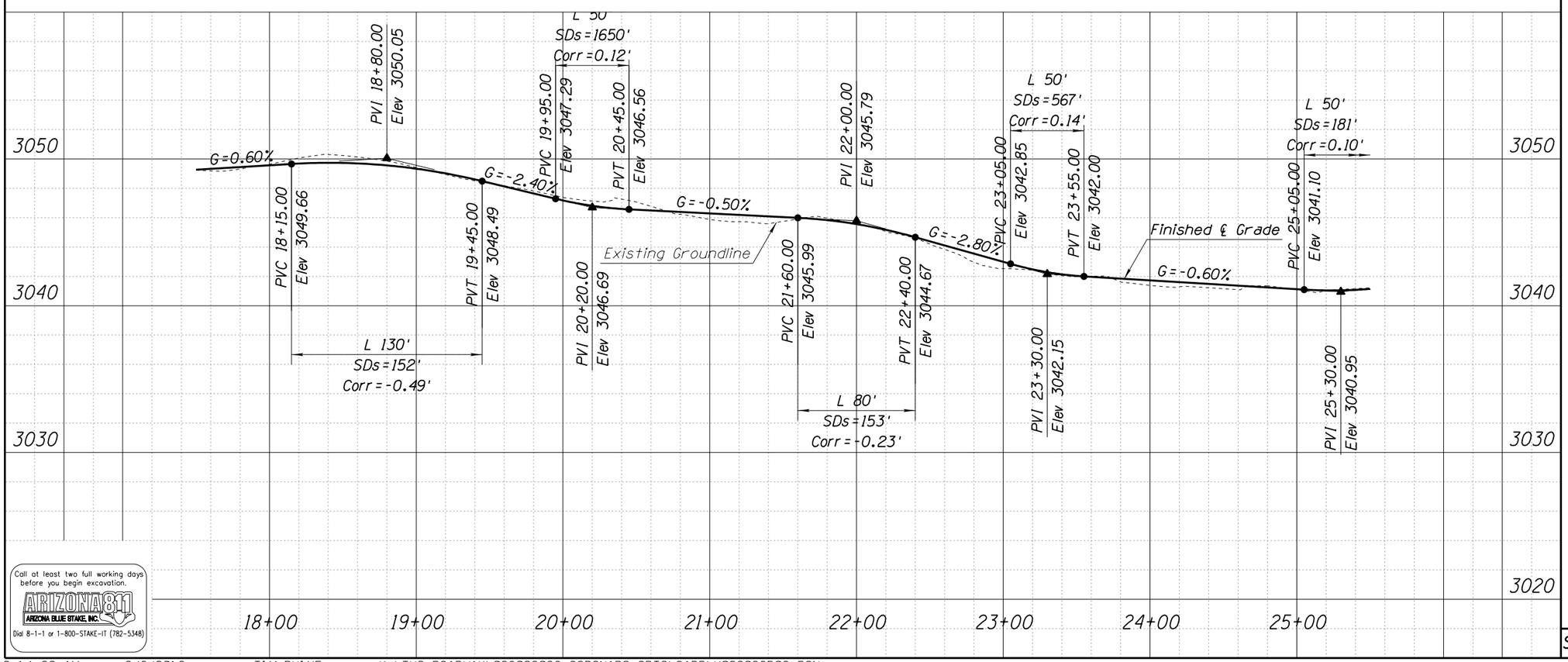

F.H.W.A. REGION	STATE	PROJECT NO.	SHEET NO.	TOTAL SHEETS	AS BUILT
9	ARIZ.	A(346)D		-	

TRACS NO.
H8390 01C

NOTES:

1. Handrail Per PC/COT Std Dtl 105
2. Construct Concrete Header Per PC/COT Std Dtl 213
3. Concrete Sidewalk Per PC/COT Std Dtl 200
4. Install Cut-Off Wall
5. Water Valve and Meter to be Adjusted by Others
6. Install New Concrete Landing with Detectable Warning Strips
7. Install Pipe (18") and Flared End Section
8. Driveway Pavement Per Struc Sec No 2
9. Cut and Remove Exist Conc Header. Tack and Join Path AC Paving

Priscilla S. Cornelio, P.E., Director

		Date
Designed	O. Tapia	03/2013
Drawn	O. Tapia	03/2013
Checked	B. Beenken	03/2013
Proj. Engr.	B. Beenken	03/2013

No.	Revision Description	Engineer	Date

PRELIMINARY
STAGE I
Review
NOT FOR CONSTRUCTION OR RECORDING

Kimley-Horn and Associates, Inc. ©2013
333 East Wetmore Road
Suite 280
Tucson, AZ 85705
(520) 615-9191

Pima County Department of Transportation

CORONADO SCHOOL
WALKWAY AND BIKEPATH
PLAN AND PROFILE
17+50 TO 25+50

Scales: Horiz. 1"=40' Vert. 1"=4'

Sheet C2 of C7

7 of 12

Call at least two full working days before you begin excavation.
ARIZONA 811
ARIZONA BLUE STAKE, INC.
Dial 8-1-1 or 1-800-STAKE-IT (782-5348)

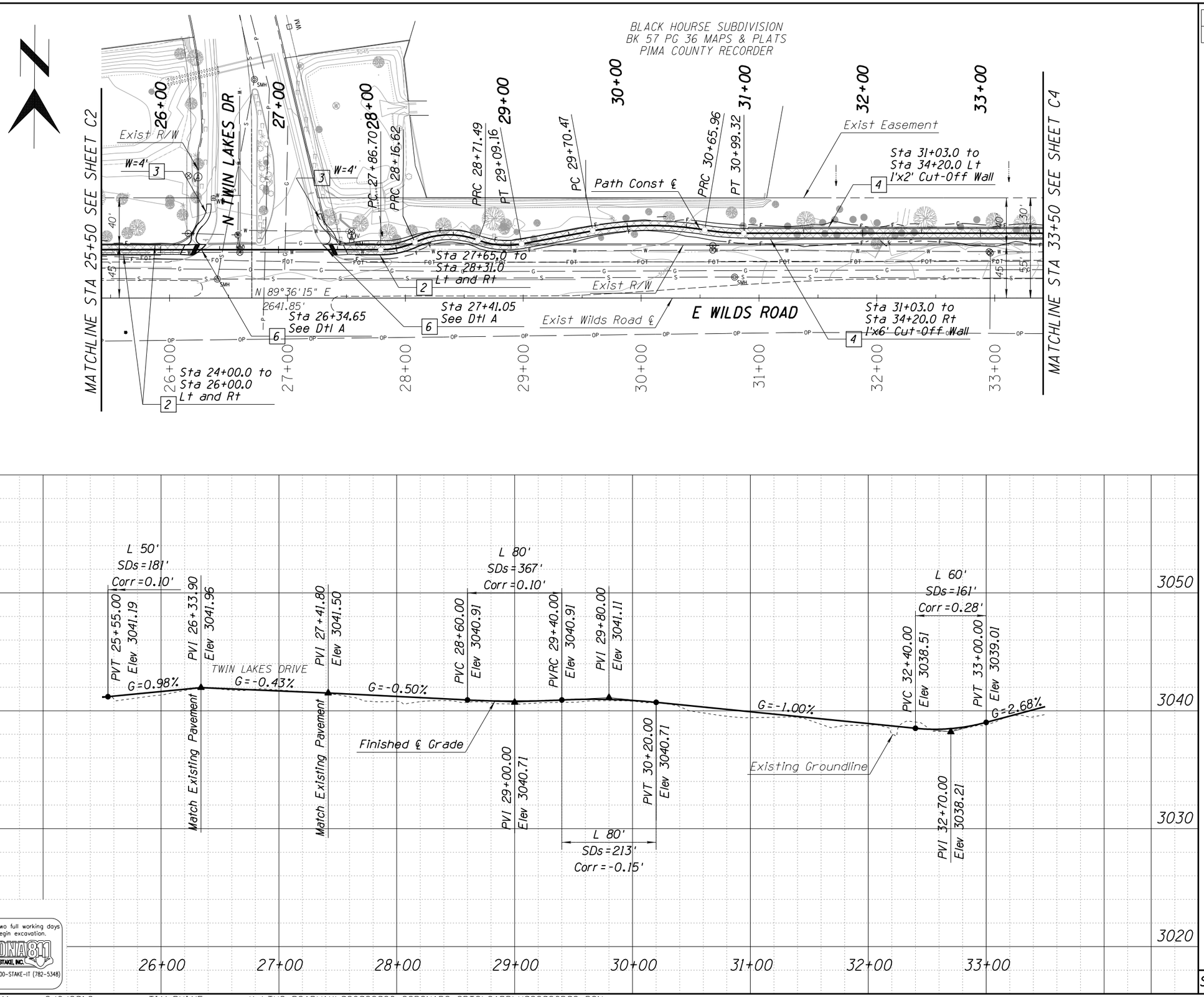

F.H.W.A. REGION	STATE	PROJECT NO.	SHEET NO.	TOTAL SHEETS	AS BUILT
9	ARIZ.	A(346)D		-	

TRACS NO.
H8390 01C

NOTES:

1. Handrail Per PC/COT Std Dtl 105
2. Construct Concrete Header Per PC/COT Std Dtl 213
3. Concrete Sidewalk Per PC/COT Std Dtl 200
4. Install Cut-Off Wall
5. Water Valve and Meter to be Adjusted by Others
6. Install New Concrete Landing with Detectable Warning Strips
7. Install Pipe (18") and Flared End Section
8. Driveway Pavement Per Struc Sec No 2
9. Cut and Remove Exist Conc Header. Tack and Join Path AC Paving

Priscilla S. Cornelio, P.E., Director

		Date
Designed	D. Tapia	03/2013
Drawn	D. Tapia	03/2013
Checked	B. Beenken	03/2013
Proj. Engr.	B. Beenken	03/2013

No.	Revision Description	Engineer	Date

PRELIMINARY
STAGE I
Review
NOT FOR CONSTRUCTION OR RECORDING

Kimley-Horn and Associates, Inc. ©2013
333 East Wetmore Road
Suite 280
Tucson, AZ 85705
(520) 615-9191

Pima County Department of Transportation

CORONADO SCHOOL WALKWAY AND BIKEPATH PLAN AND PROFILE 25+50 TO 33+50

Scales: Horiz. 1"=40' / Vert. 1"=4'

Sheet C3 of C7

Call at least two full working days before you begin excavation.
ARIZONA 811
ARIZONA BLUE STAKE, INC.
Dial 8-1-1 or 1-800-STAKE-IT (782-5348)

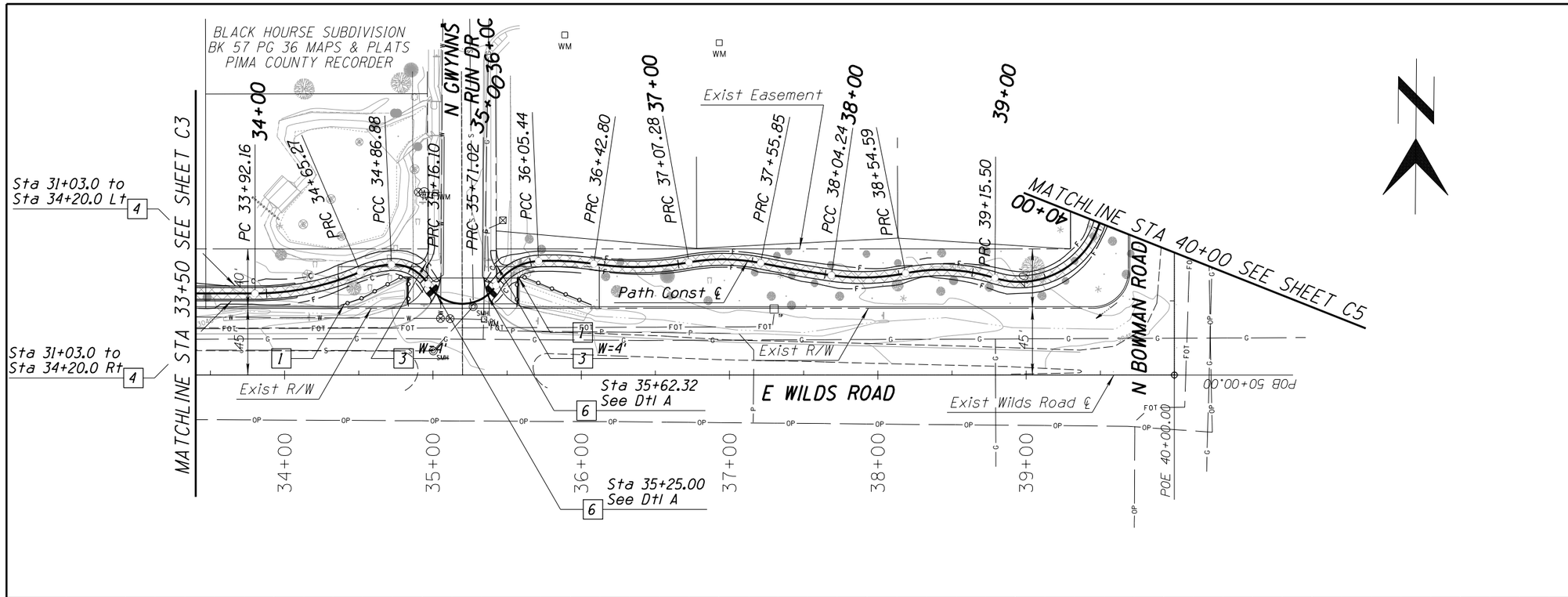

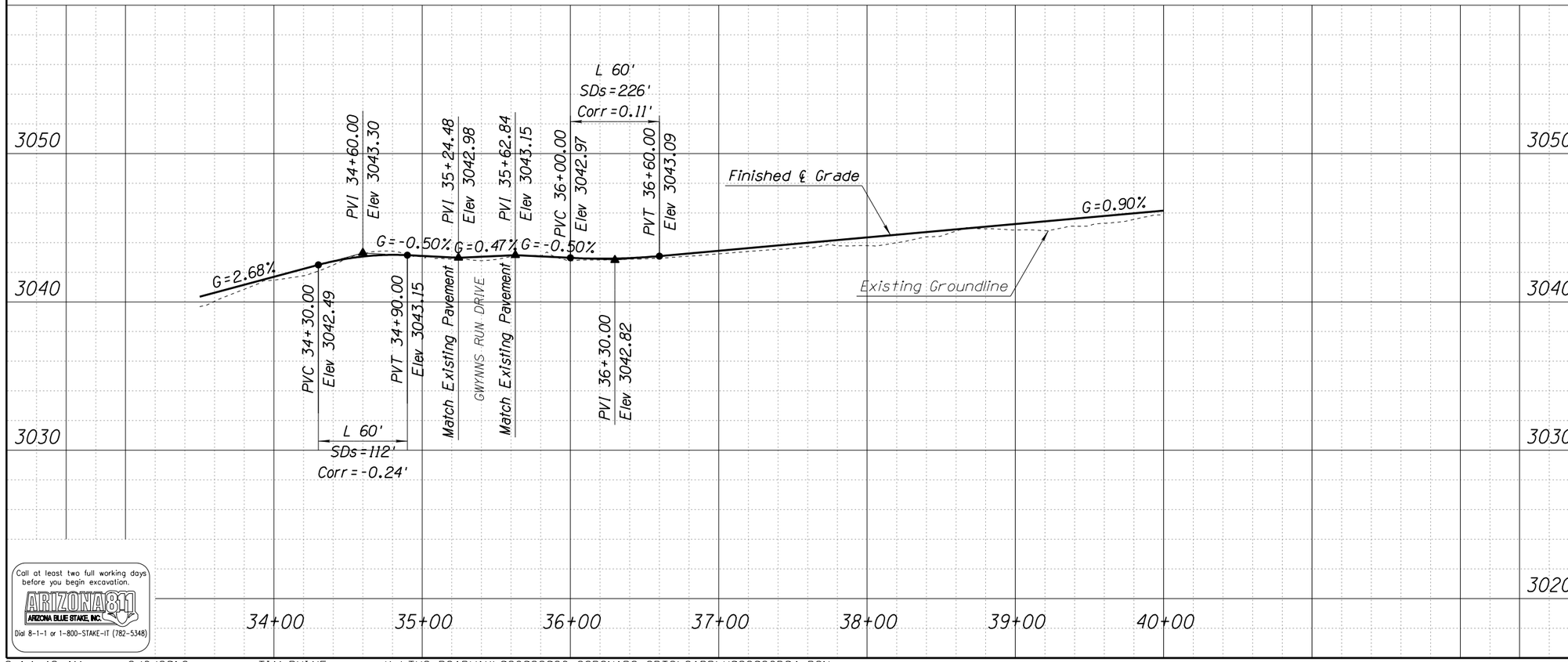

Call at least two full working days before you begin excavation.
ARIZONA811
ARIZONA BLUE STAKE, INC.
Dial 8-1-1 or 1-800-STAKE-IT (782-5348)

F.H.W.A. REGION	STATE	PROJECT NO.	SHEET NO.	TOTAL SHEETS	AS BUILT
9	ARIZ.	A(346)D		-	

TRACS NO.
H8390 01C

NOTES:

1. Handrail Per PC/COT Std Dtl 105
2. Construct Concrete Header Per PC/COT Std Dtl 213
3. Concrete Sidewalk Per PC/COT Std Dtl 200
4. Install Cut-Off Wall
5. Water Valve and Meter to be Adjusted by Others
6. Install New Concrete Landing with Detectable Warning Strips
7. Install Pipe (18") and Flared End Section
8. Driveway Pavement Per Struc Sec No 2
9. Cut and Remove Exist Conc Header. Tack and Join Path AC Paving

Priscilla S. Cornelio, P.E., Director

		Date
Designed	D. Tapia	03/2013
Drawn	D. Tapia	03/2013
Checked	B. Beenken	03/2013
Proj. Engr.	B. Beenken	03/2013

No.	Revision Description	Engineer	Date

PRELIMINARY
STAGE I
Review
NOT FOR CONSTRUCTION OR RECORDING

Kimley-Horn and Associates, Inc. ©2013
333 East Wetmore Road
Suite 280
Tucson, AZ 85705
(520) 615-9191

Pima County Department of Transportation

CORONADO SCHOOL WALKWAY AND BIKEPATH PLAN AND PROFILE 33+50 TO 40+00

Scales: Horiz. 1"=40' / Vert. 1"=4'

Sheet C4 of C7

9 of 12

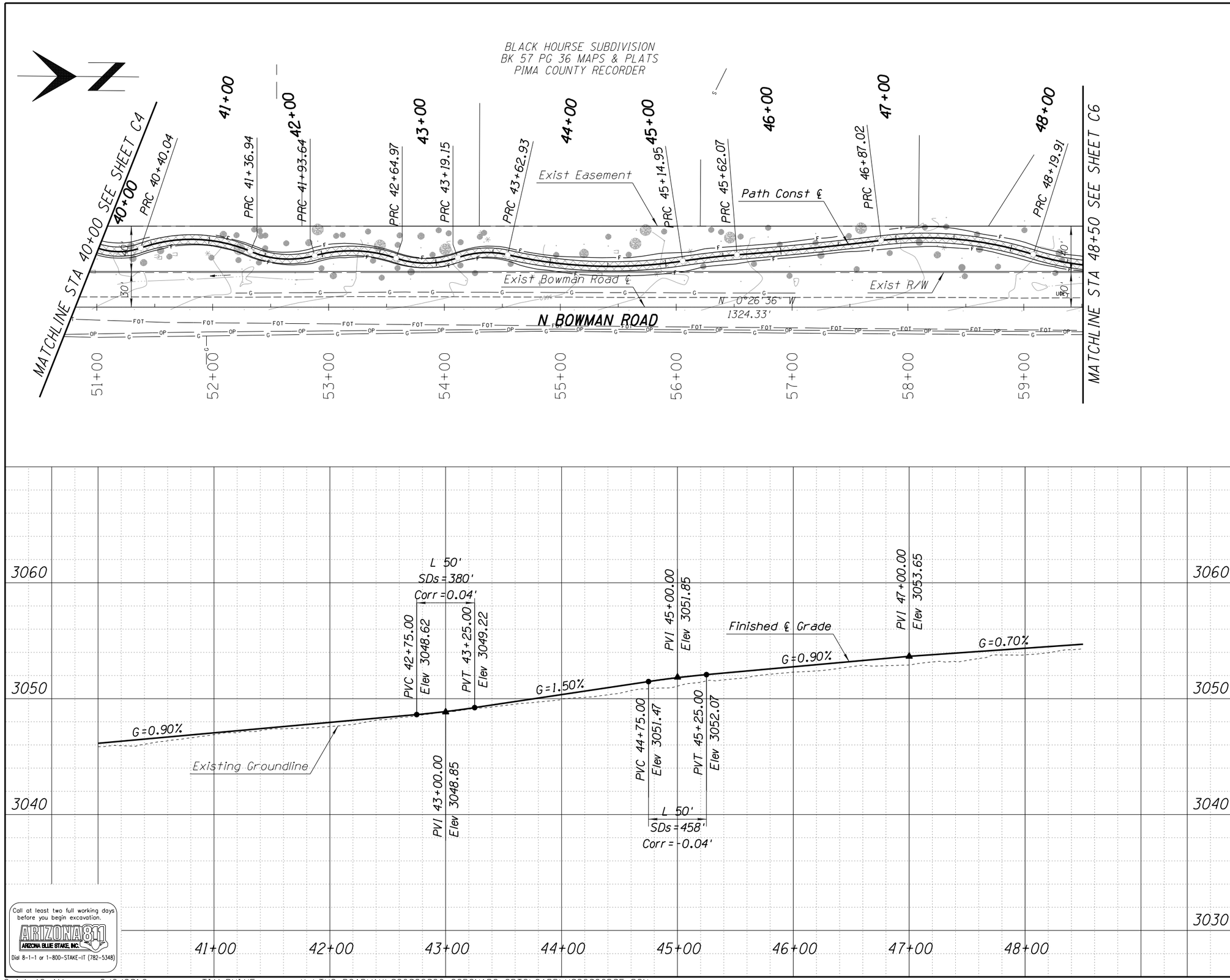

Call at least two full working days before you begin excavation.
ARIZONA 811
ARIZONA BLUE STAKE, INC.
Dial 8-1-1 or 1-800-STAKE-IT (782-5348)

F.H.W.A. REGION	STATE	PROJECT NO.	SHEET NO.	TOTAL SHEETS	AS BUILT
9	ARIZ.	A(346)D		-	

TRACS NO.
H8390 01C

NOTES:

1. Handrail Per PC/COT Std Dtl 105
2. Construct Concrete Header Per PC/COT Std Dtl 213
3. Concrete Sidewalk Per PC/COT Std Dtl 200
4. Install Cut-Off Wall
5. Water Valve and Meter to be Adjusted by Others
6. Install New Concrete Landing with Detectable Warning Strips
7. Install Pipe (18") and Flared End Section
8. Driveway Pavement Per Struc Sec No 2
9. Cut and Remove Exist Conc Header. Tack and Join Path AC Paving

Priscilla S. Cornelio, P.E., Director

		Date
Designed	O. Tapia	03/2013
Drawn	O. Tapia	03/2013
Checked	B. Beenken	03/2013
Proj. Engr.	B. Beenken	03/2013

No.	Revision Description	Engineer	Date

PRELIMINARY
STAGE I
Review
NOT FOR CONSTRUCTION OR RECORDING

Kimley-Horn and Associates, Inc. ©2013
333 East Wetmore Road
Suite 280
Tucson, AZ 85705
(520) 615-9191

Pima County Department of Transportation

CORONADO SCHOOL
WALKWAY AND BIKEPATH
PLAN AND PROFILE
40+00 TO 48+50

Scales: Horiz. 1"=40' Vert. 1"=4'

Sheet C5 of C7

10 of 12

9:14:43 AM 3/6/2013 TIM.RHINE K:\TUC_ROADWAY\098022036_CORONADO SRTS\CADD\H022036P05.DGN

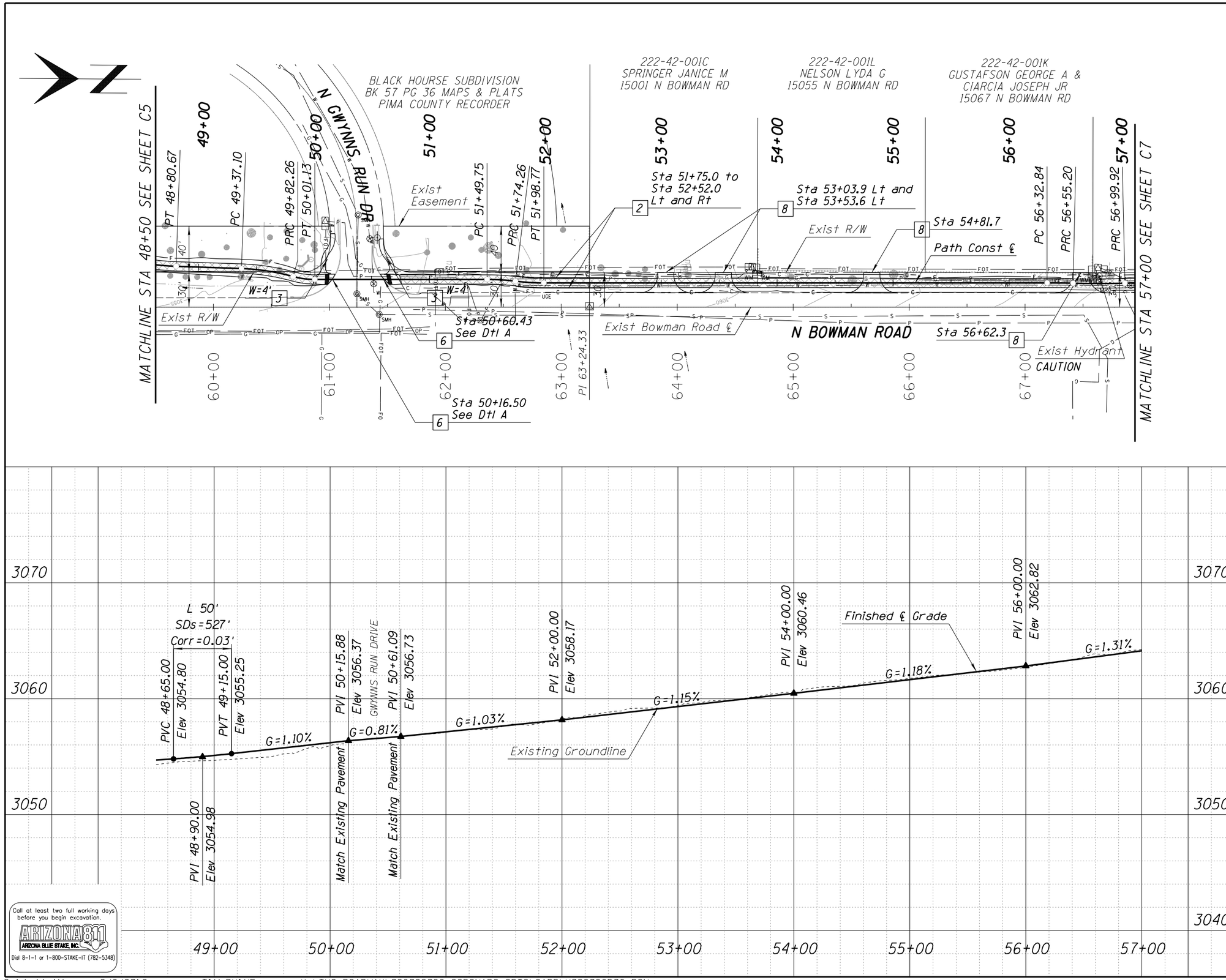

F.H.W.A. REGION	STATE	PROJECT NO.	SHEET NO.	TOTAL SHEETS	AS BUILT
9	ARIZ.	A(346)D		-	

TRACS NO.
H8390 01C

NOTES:

1. Handrail Per PC/COT Std Dtl 105
2. Construct Concrete Header Per PC/COT Std Dtl 213
3. Concrete Sidewalk Per PC/COT Std Dtl 200
4. Install Cut-Off Wall
5. Water Valve and Meter to be Adjusted by Others
6. Install New Concrete Landing with Detectable Warning Strips
7. Install Pipe (18") and Flared End Section
8. Driveway Pavement Per Struc Sec No 2
9. Cut and Remove Exist Conc Header. Tack and Join Path AC Paving

Priscilla S. Cornelio, P.E., Director

		Date
Designed	D. Tapia	03/2013
Drawn	D. Tapia	03/2013
Checked	B. Beenken	03/2013
Proj. Engr.	B. Beenken	03/2013

No.	Revision Description	Engineer	Date

PRELIMINARY
STAGE I
Review
NOT FOR CONSTRUCTION OR RECORDING

Kimley-Horn and Associates, Inc. ©2013
333 East Wetmore Road
Suite 280
Tucson, AZ 85705
(520) 615-9191

Pima County Department of Transportation

CORONADO SCHOOL
WALKWAY AND BIKEPATH
PLAN AND PROFILE
48+50 TO 57+00

Scales: Horiz. 1"=40' / Vert. 1"=4'

Sheet C6 of C7

11 of 12

Call at least two full working days before you begin excavation.
ARIZONA 811
ARIZONA BLUE STAKE, INC.
Dial 8-1-1 or 1-800-STAKE-IT (782-5348)

9:14:44 AM 3/6/2013 TIM.RHINE K:\TUC_ROADWAY\098022036_CORONADO SRTS\CADD\H022036P06.DGN

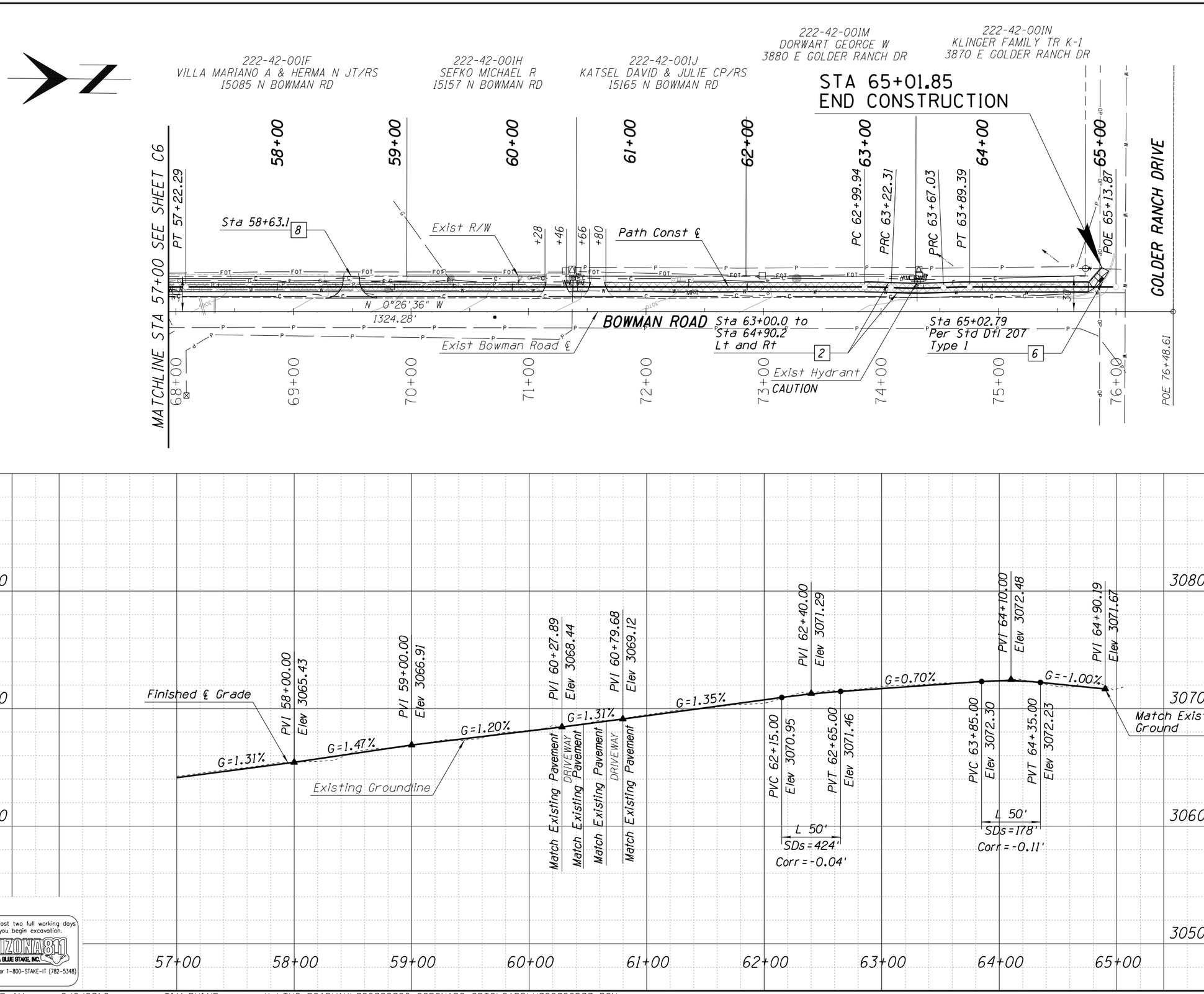

F.H.W.A. REGION	STATE	PROJECT NO.	SHEET NO.	TOTAL SHEETS	AS BUILT
9	ARIZ.	A(346)D		-	

TRACS NO.
H8390 01C

NOTES:

1. Handrail Per PC/COT Std Dtl 105
2. Construct Concrete Header Per PC/COT Std Dtl 213
3. Concrete Sidewalk Per PC/COT Std Dtl 200
4. Install Cut-Off Wall
5. Water Valve and Meter to be Adjusted by Others
6. Install New Concrete Landing with Detectable Warning Strips
7. Install Pipe (18") and Flared End Section
8. Driveway Pavement Per Struc Sec No 2
9. Cut and Remove Exist Conc Header. Tack and Join Path AC Paving

Priscilla S. Cornelio, P.E., Director

		Date
Designed	D. Tapia	03/2013
Drawn	D. Tapia	03/2013
Checked	B. Beenken	03/2013
Proj. Engr.	B. Beenken	03/2013

No.	Revision Description	Engineer	Date

PRELIMINARY
STAGE I
Review
NOT FOR CONSTRUCTION OR RECORDING

Kimley-Horn and Associates, Inc. ©2013
333 East Wetmore Road
Suite 280
Tucson, AZ 85705
(520) 615-9191

Pima County Department of Transportation

CORONADO SCHOOL
WALKWAY AND BIKEPATH
PLAN AND PROFILE
57+00 TO 65+00

Call at least two full working days before you begin excavation.
ARIZONA 811
ARIZONA BLUE STAKE, INC.
Dial 8-1-1 or 1-800-STAKE-IT (782-5348)

Scales	Horiz. 1"=40'	Sheet C7 of C7	12 of 12
	Vert. 1"=4'		