F.H.W.A. REGION	STATE	PROJECT NO.	SHEET NO.	TOTAL SHEETS	AS BUILT
9	ARIZ.	STP-PPM-0(209)D	1	273	

SS693 01C

PIMA COUNTY DOT

MAGEE RD. IMPROVEMENTS

LA CAÑADA DR. TO ORACLE RD. (S.R. 77)

GENERAL DESCRIPTION OF PROJECT

IMPROVEMENTS TO 1.35 MILES OF MAGEE RD. FROM LA CAÑADA DR. TO ORACLE RD. INCLUDING THE CONSTRUCTION OF A FOUR LANE ROADWAY WITH MEDIANS, CURBS, SIDEWALKS, AND DRAINAGE FACILITIES.

PROJECT NUMBER

4MRLCO

FEDERAL ID #: STP-PPM-0(209)D

TRACS #: 0000 PM PPM SS693 01C

PIMA COUNTY BOARD OF SUPERVISORS

ALLY MILLER, DISTRICT 1
RAMON VALADEZ, CHAIRMAN, DISTRICT 2
SHARON BRONSON, DISTRICT 3
RAY CARROLL, DISTRICT 4
RICHARD ELIAS, DISTRICT 5

PROJECT IN SUPERVISOR DISTRICT 1

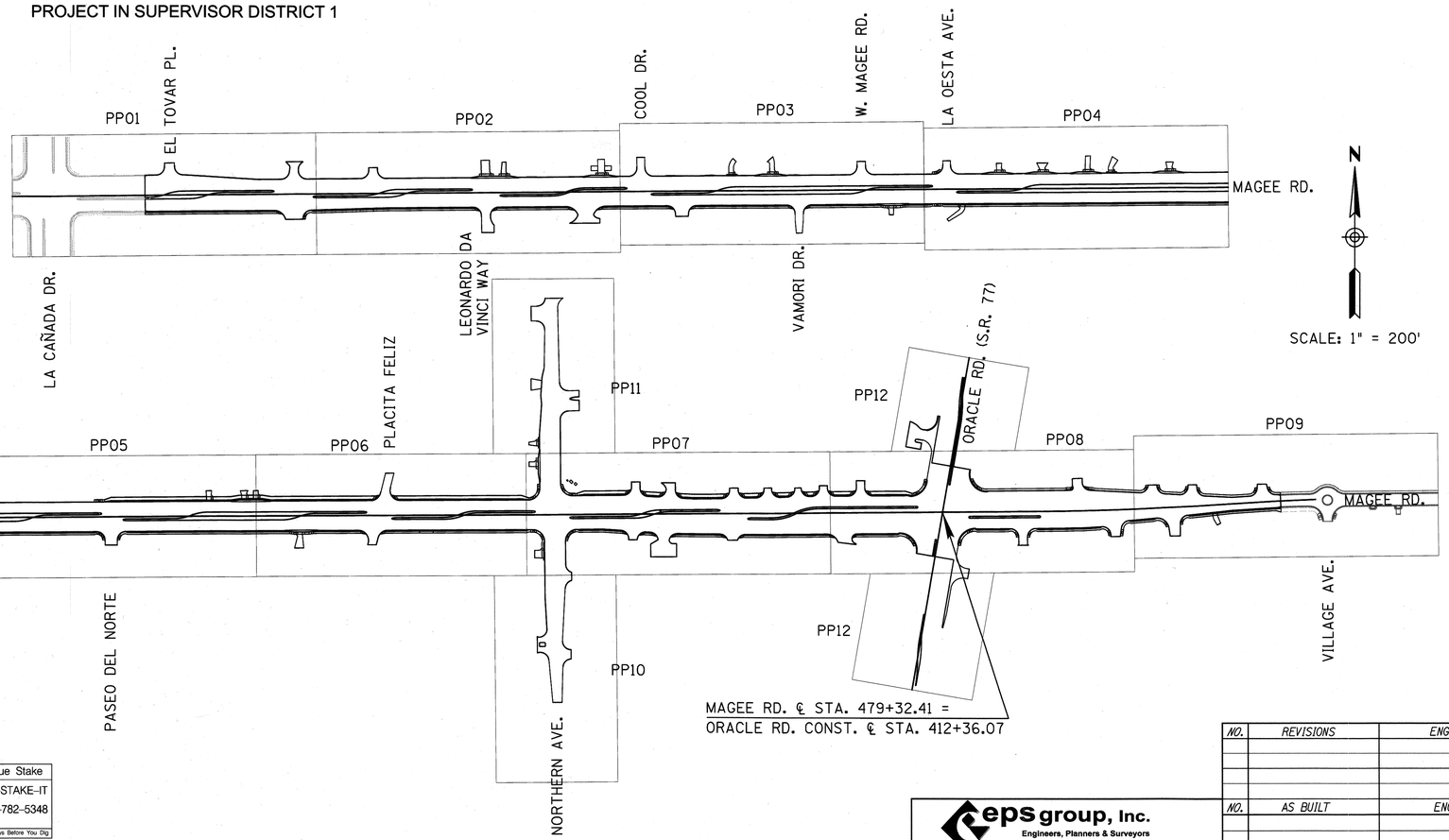

N

SCALE: 1" = 200'

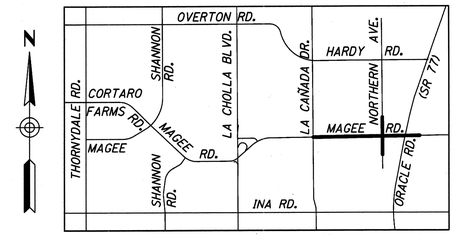

Location Map
NOT TO SCALE
Section 25, 26, 35, 36
T-12-S, R-13-E,
G & S R & M
Pima County, Arizona

SHEET INDEX

SHEET NO.	PAGE NO.	DESCRIPTION
CS01	1	COVER SHEET
GN01 - GN02	2 - 3	GENERAL NOTES
TP01	4	PAVEMENT STRUCTURAL SECTIONS
TP02 - TP07	5 - 9a	TYPICAL SECTIONS
RS01 - RS04	10 - 13	ROADWAY SUMMARY SHEETS
DS01 - DS08	14 - 21	DRAINAGE SUMMARY SHEETS
RD01 - RD13	22 - 34	ROADWAY DETAIL SHEETS
HC01 - HC04	35 - 38	HORIZONTAL CONTROL SHEETS
PP01 - PP12	39 - 49a	ROADWAY PLAN & PROFILE SHEETS
DW01 - DW30	50 - 78a	SIDE STREET & DRIVEWAY PLAN & PROFILE SHEETS
GD01 - GD11	79 - 88	GEOMETRIC DATA SHEETS
ST01 - ST19	89 - 105b	STAKING SHEETS
DM01 - DM09	106 - 113a	DEMOLITION SHEETS
SD01 - SD11	114 - 124	STORM DRAIN PLAN & PROFILE SHEETS
SD12 - SD16	125 - 129	STORM DRAIN PROFILE SHEETS
DP01 - DP06	130 - 135	CROSS DRAINAGE PLAN & PROFILE SHEETS
DD01 - DD16	136 - 150a	DRAINAGE DETAIL SHEETS
PM01 - PM07	151 - 156a	PAVEMENT MARKING SHEETS
SN01 - SN17	157 - 172	SIGNING PLAN SHEETS
TS01 - TS10	173 - 182	TRAFFIC SIGNAL SHEETS
SL01 - SL03	183 - 185	STREET LIGHTING SHEETS
IT01 - IT09	186 - 194	ITS SYSTEM SHEETS
GU01 - GU02	195 - 196	GENERAL UTILITY NOTES SHEETS
WV01 - WV02	197 - 198	WATER VALVE INDEX SHEETS
SM01	199	SEWER MANHOLE INDEX SHEET
CVR	200	LANDSCAPING/IRRIGATION COVER SHEET
L1 - L19	201 - 219	LANDSCAPE SHEETS
IR1 - IR20	220 - 239	IRRIGATION SHEETS
SW01 - SW08	240 - 247	STORMWATER POLLUTION PREVENTION SHEETS
RW1 - RW10	248 - 257	RIGHT-OF-WAY SHEETS
W01 - W18	258 - 273b	WATER SYSTEM MODIFICATIONS SHEETS

PC RWRD#: UPC-2011-011

Pima County Department of Transportation
201 N. Stone Ave. 4th floor Tucson, Arizona 85701
Phone Number: 740-6410
Priscilla S. Cornelio, P.E. Director

NO.	REVISIONS	ENGINEER	DATE

NO.	AS BUILT	ENGINEER	DATE

Registered Professional Engineer (Civil) CERTIFICATE NO. 10219 ANTHONY J. HERRERA Date Signed 5/1/13 ARIZONA, U.S.A. Expires 12/31/15

REVIEWED BY	ENGINEER	DATE
MGR. TRANS ENGR.		5/8/2013
MGR. TRAFFIC ENGR.		
MGR. FIELD ENGR.		5-14-13
MGR. WWM		
MGR. TUCSON WATER		

APPROVED: 5/13 2013
DIRECTOR

eps group, Inc.
Engineers, Planners & Surveyors
8710 N. Thornydale Rd., Ste. 140, Tucson, Arizona 85742
Phone (520) 408-1400 Fax (520) 408-1403

Arizona Blue Stake
1-800-STAKE-IT
1-800-782-5348
Call Two Working Days Before You Dig

PROJECT NO. 4MRLCO | SHEET NO. CS01 OF CS01 | PAGE NO. 1 OF 273

FILE NAME: S:\10-077 Magee Road\Civil\CADD\CS\4MRLCO_CS01.dgn DATE: 4/30/2013 TIME: 2:29:21 PM aherrer

MAGEE RD. IMPROVEMENTS - LA CAÑADA DR. TO ORACLE RD. (SR 77) - PROJECT NO. 4MRLCO

F.H.W.A. REGION	STATE	PROJECT NO.	SHEET NO.	TOTAL SHEETS	AS BUILT
9	ARIZ.	STP-PPM-0(209)D	2	273	

SS693 01C

GENERAL NOTES:

1. CONSTRUCTION SHALL BE IN CONFORMANCE WITH THE SPECIFICATIONS AND DETAILS LISTED IN THE SPECIAL PROVISIONS.

2. UTILITY LOCATIONS SHOWN ON THE PLANS WERE COMPILED BASED ON THE BEST INFORMATION AVAILABLE TO THE DEPARTMENT. UTILITY LOCATIONS ARE NOT INTENDED TO BE EXACT OR COMPLETE. PRIOR TO COMMENCING CONSTRUCTION, THE CONTRACTOR SHALL VERIFY THE LOCATION OF ALL UTILITIES WITH THE APPROPRIATE ORGANIZATIONS. CONTACT "BLUE STAKE" AT 1-800-782-5348 TWO FULL WORKING DAYS PRIOR TO BEGINNING CONSTRUCTION (SATURDAYS AND SUNDAYS ARE NOT CONSIDERED WORKING DAYS).

3. RIGHT-OF-WAY ENCROACHMENTS SHALL BE REMOVED ONLY BY ORDER OF PIMA COUNTY, UNLESS OTHERWISE NOTED.

4. REMOVAL OF ALL CACTI AND NATIVE PLANTS SHALL BE IN ACCORDANCE WITH THE PROVISIONS OF THE "ARIZONA NATIVE PLANT LAW", A.R.S. CHAPTER 7.

5. THE CONTRACTOR SHALL ADJUST ALL WATER METERS, VALVE BOXES, STORM DRAIN MANHOLES, AND SEWER MANHOLES AND CLEANOUTS TO FINISH GRADE. THIS WORK SHALL BE CONSIDERED INCIDENTAL TO THE OTHER ITEMS OF WORK, EXCEPT WHEN THE BIDDING SCHEDULE CONTAINS SPECIFIC ITEMS ON A UNIT BASIS.

6. THE BASIS OF BEARING IS S89^{0} 39' 00.18"W AS MEASURED BETWEEN PIMA COUNTY DOT – CITY OF TUCSON GEODETIC CONTROL POINT (7)T13. A ½" REBAR TAGGED AMP 9432 LOCATED APPROXIMATELY 350' NORTH OF McCARTY RD. AND APPROXIMATELY 15' WEST OF THE WEST EDGE OF PAVEMENT OF LA CHOLLA BLVD. AND PIMA COUNTY DOT – CITY OF TUCSON GEODETIC CONTROL POINT (7)T01. A 2" BRASS DISK IN CONCRETE WITH A PUNCH MARK LOCATED APPROXIMATELY ½ MILE EAST OF CAMINO DE OESTE IN THE CENTERLINE OF CORTARO FARMS RD. 3' WEST OF A CROSS-WALK ON THE EAST SIDE OF QUAIL RUN ELEMENTARY SCHOOL.

7. BASIS OF ELEVATION: BRASS CAP IN POTHOLE AT THE INTERSECTION OF MAGEE ROAD AND NORTHERN AVENUE. ELEVATION BEING 2562.75. THIS ELEVATION WAS USED BY EEC, FROM FILES PROVIDED BY PIMA COUNTY SURVEY DEPARTMENT.

8. BASIS OF COORDINATES: DATA WAS COLLECTED ON GRID. THE COORDINATES WERE THEN MULTIPLIED BY THE INVERSE OF THE COMBINED SCALE FACTOR (1/X = 1.000124849) TO CONVERT GRID DISTANCES TO GROUND DISTANCES. TO AVOID CONFUSION WHERE THE CONVERTED GROUND DISTANCES COULD BE MISINTERPRETED TO BE STATE PLANE VALUES, 400,000.00 WAS THEN SUBTRACTED FROM THE NORTHINGS AND 900,000.00 WAS SUBTRACTED FROM THE EASTINGS.

   TO CONVERT THE GROUND VALUES TO GRID, ADD 400,000 TO THE NORTHINGS AND 900,000 TO THE EASTINGS. THEN, MULTIPLY THE COORDINATE VALUES BY THE COMBINED SCALE FACTOR (0.9998751670).

9. BASIS OF STATIONING: STATIONS FOR MAGEE ROAD INCREASE FROM WEST TO EAST. THE STATIONING FOR CORTARO FARMS ROAD AND MAGEE ROAD IS BASED ON PSOMAS PLANS FOR CORTARO FARMS ROAD W.O. 4CFCOT. STATIONING FOR CORTARO FARMS ROAD AT THORNYDALE ROAD IS 235+41.11. STATIONING FOR LA CAÑADA DRIVE IS BASED ON HDR ENGINEERING, INC. RIGHT-OF-WAY PLANS – LA CAÑADA DRIVE - INA ROAD TO CALLE CONCORDIA W.O. 4LCILL. STATIONING FOR LA CAÑADA AT MAGEE ROAD IS LISTED AS N/A ON SHEET 19 OF 32. STATIONING FOR LA CHOLLA BOULEVARD IS BASED ON CASTRO ENGINEERING PLAN AND PROFILE FOR LA CHOLLA BOULEVARD, W.O. 4LCIMR, SHEET R7 OF 23. STATIONING FOR LA CHOLLA BOULEVARD AT THE WEST LEG OF MAGEE ROAD IS 262+93.86.

10. SOILS INFORMATION WILL BE MADE AVAILABLE TO PROSPECTIVE BIDDERS IN THE GEOTECHNICAL REPORT. SOILS INFORMATION SO PROVIDED SHALL BE FOR INFORMATION PURPOSES ONLY. THIS INFORMATION WAS DEVELOPED AS ACCURATELY AS POSSIBLE BY THE METHODS USED. PIMA COUNTY ACCEPTS NO RESPOSIBILITY FOR ANY CONDITIONS ENCOUNTERED WHICH VARY FROM THE INFORMATION PROVIDED.

11. THE CONTRACTOR SHALL MAINTAIN ACCESS TO ALL DRIVEWAYS, ALLEYS, AND MAILBOXES DURING CONSTRUCTION. THE CONTRACTOR WILL NOT RESTRICT EMERGENCY VEHICLES, U.S. POSTAL DELIVERY, SOLID WASTE COLLECTIONS, AND/OR ACCESS TO THE ADJACENT PROPERTIES, EXCEPT AS APPROVED BY THE ENGINEER.

12. OMISSIONS OR CONFLICTS BETWEEN VARIOUS ELEMENTS OF THE DRAWINGS, NOTES AND DETAILS SHALL BE BROUGHT TO THE ATTENTION OF THE ENGINEER AND RESOLVED BEFORE PROCEEDING WITH THE WORK.

13. ALL STATIONING SHOWN ON THE PLANS AND PROFILES IS ALONG THE CONSTRUCTION CENTERLINE UNLESS OTHERWISE NOTED.

14. EXISTING UTILITIES INCLUDE, BUT MAY NOT BE LIMITED TO, OVERHEAD AND UNDERGROUND ELECTRIC, TELEPHONE, TELEVISION, SEWER, GAS, WATER, AND SHALL BE MOVED BY OTHERS UNLESS OTHERWISE NOTED AND SHOWN IN THESE PLANS.

15. THE CONTRACTOR'S ATTENTION IS CALLED TO THE LIMITED AREA AVAILABLE ON THE SITE FOR EXCAVATION, EMBANKMENT AND OTHER CONSTRUCTION ACTIVITIES.

16. EXISTING TOPOGRAPHIC CONDITIONS SHOWN ON THE PLAN SHEETS REFLECT CONDITIONS AS OF SEPTEMBER 20, 2007.

17. THE CONTRACTOR SHALL ADHERE TO THE FOLLOWING FOR WORK IN ADOT RIGHT-OF-WAY:

    A. ALL WORK SHALL BE DESIGNED AND CONSTRUCTED IN ACCORDANCE WITH ADOT 2008 EDITION OF THE STANDARD SPECIFICATIONS FOR ROAD AND BRIDGE CONSTRUCTION, MAY 2012 CONSTRUCTION STANDARD DRAWINGS, SIGNING & MARKING STANDARD DRAWINGS AND TRAFFIC SIGNALS & LIGHTING STANDARD DRAWINGS ALONG WITH ALL CURRENT REVISIONS.

    B. TRAFFIC SHALL BE PROTECTED IN ACCORDANCE WITH THE MANUAL ON UNIFORM TRAFFIC CONTROL DEVICES (MUTCD), 2009 EDITION AND THE ARIZONA SUPPLEMENT MODIFICATIONS DATED JANUARY 13, 2012, AND THE ADOT TRAFFIC CONTROL DESIGN GUIDELINES. ALL SIGNS, PLACEMENT OF SIGNS, THE NECESSITY OF FLAG PERSONS AND UNIFORMED OFFICERS ARE THE RESPONSIBILITY OF THE PERMITTEE.

    C. THE CONTRACTOR SHALL STRIPE THE PROJECT ROADWAY IN ACCORDANCE WITH THE CURRENT EDITION OF THE SIGNING AND MARKING STANDARD DRAWINGS, (M&S – SERIES) AND THE STRIPING PLANS.

    D. THE INFORMATION ON THESE DRAWINGS SHOWING THE TYPE, SIZE AND LOCATION OF EXISTING UTILITIES IS BASED ON THE BEST INFORMATION AVAILABLE. THE CONTRACTOR SHALL VERIFY THE EXACT LOCATION AND DEPTH OF ALL UNDERGROUND FACILITIES.

    E. ALL RIGHT-OF-WAY MARKERS, DISTURBED, DESTROYED OR REMOVED SHALL BE REPLACED BY A R.L.S. PER CONSTRUCTION STANDARD DRAWING C-21.10. MONUMENTS THAT ARE RE-ESTABLISHED SHALL BE RECORDED AT THE APPROPRIATE COUNTY RECORDER'S OFFICE, AND A COPY OF THE CORNER RECORDATION DOCUMENTATION SHALL BE SUBMITTED TO THE ENGINEER AND ADOT R/W PLANS SECTION WITHIN FIVE WORKING DAYS OF RECORDATION.

    F. ALL WORK NOT IN CONFORMANCE WITH THESE PLANS AND ADOT SPECIFICATIONS SHALL BE REMOVED AT THE CONTRACTOR'S EXPENSE.

    G. ADOT REQUIRES STRIPING OBLITERATION TO BE TESTED FOR LEAD BASED PAINT BY THE PROJECT OWNER PRIOR TO OBLITERATION. IF TEST RESULTS ARE BELOW POLICY THRESHOLD LIMITS, NO FURTHER ACTION WILL BE REQUIRED. PLEASE SUBMIT TEST RESULTS AS SOON AS POSSIBLE FOR FURTHER GUIDANCE.

18. THE CONTRACTOR SHALL SPLICE AND REPLACE ELECTRICAL LINE WHERE NEEDED IN ORDER TO MAINTAIN ELECTRICITY TO THE VANTAGE WEST CREDIT UNION SIGN (MAGEE RD STATION 468+82, 102' LEFT OF CENTERLINE). THIS WORK SHALL MEET APPLICABLE ELECTRICAL CODE REQUIREMENTS AND SHALL BE CONSIDERED INCIDENTAL TO BOX CULVERT, BC/3, INSTALLATION.

19. ALL MILLING AND PAVING ON ORACLE ROAD SHALL BE BETWEEN THE HOURS OF 9:00 P.M. AND 6:00 A.M.

ABBREVIATIONS NOT INCLUDED IN PC/COT STD. DTL. 101

Aluminum Cap on Pipe	A.C.P.
Abandoned	Aband
Asphalt Rubber Asphaltic Concrete	ARAC
Correction	Corr.
Decomposed Granite	D.G.
Detail	Dtl.
Drainage Easement	D.E.
Edge Of Pavement	E.P.
Flaired End Treatment Section	FETS
General Land Office	G.L.O.
Intelligent Traffic System	ITS
Median	Med.
Point Of Compound Curve	P.C.C.
Point Of End	P.O.E.
Raised Pavement Marker	R.P.M.
Shoulder	Shld.
Standard	Std.
Stopping Sight Distance	SSDs
Temporary Construction Easement	T.C.E.
Vertical Curve	V.C.

LEGEND

CONSTRUCTION CENTERLINE, UNLESS OTHERWISE NOTED

Scale:	N.T.S.	Sheet GN01 of GN02	Page 2 of 273

Priscilla S. Cornelio, P.E., Director

		Date
Designed	MDC/JDB/BGN	12/12
Drawn	MDC/JDB/BGN	12/12
Checked	JDS	12/12
Proj. Engr.	AJH	12/12

No.	Revision Description	Engineer	Date

AZ RLS 42219 ANTHONY J. HERRERA Date Signed 12/27/12 ARIZONA U.S.A. Expires 12/31/13

epsgroup, Inc.
Engineers, Planners & Surveyors
8710 N. Thornydale Rd., Ste. 140, Tucson, Arizona 85742
Phone (520) 408-1888 Fax (520) 408-1928

Arizona Blue Stake
1-800-STAKE-IT
1-800-782-5348
Or Tele-Metro Tucson Metro No. 792

Pima County Department of Transportation

GENERAL NOTES

MAGEE RD.
LA CAÑADA DR. – ORACLE RD. (SR 77)
PROJECT NO. 4MRLCO

MAGEE RD. IMPROVEMENTS - LA CAÑADA DR. TO ORACLE RD. (SR 77) - PROJECT NO. 4MRLCO

FILE NAME: S:\10-077 Magee Road\Civil\CADD\GN\4MRLCO_GN01.dgn DATE: 12/27/12 TIME: 8:42:08 AM aherrera

F.H.W.A. REGION	STATE	PROJECT NO.	SHEET NO.	TOTAL SHEETS	AS BUILT
9	ARIZ.	STP-PPM-0(209)D	3	273	

SS693 01C

GENERAL NOTES (CONTINUED):

EARTHWORK QUANTITIES		
Item No.	Item Description	Volume (CY)
2030500	Excavation	9,313
2030300	Roadway Excavation	9,716
	10% Shrinkage	743
	Existing Asphaltic Concrete Pavement	2,284
2030401	Drainage Excavation	291
	10% Shrinkage	29
	Box Culvert Structure Excavation	10,613
	10% Shrinkage	1,061
	Pipe Excavation	3,116
	10% Shrinkage	312
	Excavation to Install Riprap	966
	10% Shrinkage	97
	Total Excavation	24,702
	Total Shrinkage	2,242
	NET EXCAVATION	22,460
	Roadway Embankment	42,900
	10% Shrinkage from Over Excavation	931
	Ground Compaction (0.10 Ft.)	1,971
	Box Culvert Structure Backfill	4,713
	Pipe Backfill	1,554
	Trench Backfill	860
	NET EMBANKMENT	52,929
2030901	Borrow	30,469

1) EXCAVATION IS USED FOR OVER EXCAVATION, SEE DETAIL RD01.

2) ROADWAY EXCAVATION INCLUDES EXISTING ASPHALTIC CONCRETE PAVEMENT IN CUT SECTIONS (2,284 C.Y.). NO SHRINK FACTOR FOR EXCAVATED ASPHALTIC CONCRETE PAVEMENT.

3) ASSUMED 6" ASPHALTIC CONCRETE PAVEMENT THICKNESS FOR EXISTING PAVEMENT VOLUME. THE TOTAL ASPHALTIC CONCRETE PAVEMENT VOLUME ON THE PROJECT IS 7,682 C.Y. NOT INCLUDING MILLINGS.

4) DRAINAGE EXCAVATION INCLUDES THE CHANNELS AT ALL DROP INLETS. ALL OTHER CHANNELS ARE INCLUDED UNDER ROADWAY EXCAVATION.

5) ADOT STANDARD DETAILS WERE USED TO CALCULATE DRAINAGE EARTHWORK.

6) PIPE EXCAVATION = TOTAL STORM DRAIN EXCAVATION + TOTAL CROSS CULVERT PIPE EXCAVATION. PIPE EXCAVATION IS INCLUDED IN THE COST OF THE PIPE OR CULVERT ITEM.

7) EXCAVATION TO INSTALL RIPRAP INCLUDES HAND PLACED GROUTED RIPRAP AND DUMPED RIPRAP AND IS INCLUDED IN THE COST OF THE RIPRAP ITEM.

8) PIPE BACKFILL = TOTAL STORM DRAIN BACKFILL + TOTAL CROSS CULVERT PIPE BACKFILL. PIPE BACKFILL IS INCLUDED IN THE COST OF THE PIPE OR CULVERT ITEM.

9) TRENCH BACKFILL ACCOUNTS FOR PIPES AND BOX CULVERTS.

10) MILLING (205 C.Y.), BASED ON MILL DEPTHS SHOWN ON SHEET ST18, IS THE PROPERTY OF THE CONTRACTOR AND MAY BE USED AS EMBANKMENT MATERIAL AT THE DISCRETION OF THE CONTRACTOR.

LENGTH OF PROJECT

Magee Road Sta. 417+93.15 to Sta. 489+33.99

Gross Length = 7,140.84' (1.35 Mile)

DESIGN DATA (MAGEE RD.)			
DESIGN TRAFFIC	LA CAÑADA DR. TO NORTHERN AVE.	NORTHERN AVE. TO ORACLE RD.	ORACLE RD. EAST
2007 ADT	16,900 veh/day	17,700 veh/day	2,400 veh/day
2030 ADT	22,300 veh/day	22,600 veh/day	3,100 veh/day

DESIGN DATA (ORACLE RD.)		
DESIGN TRAFFIC	NORTH OF MAGEE RD.	SOUTH OF MAGEE RD.
2007 ADT	55,900 veh/day	63,400 veh/day
2030 ADT	82,700 veh/day	75,900 veh/day

DESIGN SPEED (MAGEE RD.)						
ROADWAY	LA CAÑADA DR. TO NORTHERN AVE.		NORTHERN AVE. TO ORACLE RD.		ORACLE RD. TO VILLAGE AVE.	
	DESIGN	POSTED	DESIGN	POSTED	DESIGN	POSTED
MAGEE RD.	50 mph	45 mph	40 mph	35 mph	30 mph	25 mph

DESIGN SPEED (ORACLE RD.)				
ROADWAY	NORTH OF MAGEE RD.		SOUTH OF MAGEE RD.	
	DESIGN	POSTED	DESIGN	POSTED
ORACLE RD.	60 mph	50 mph	60 mph	50 mph

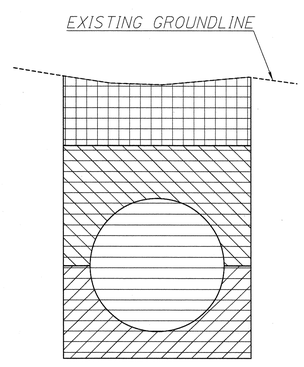

PIPE EXCAVATION & BACKFILL
(SEE ADOT ROADWAY DESIGN GUIDELINES - APPENDIX D)

LEGEND:

- TRENCH BACKFILL
- PIPE/BOX BACKFILL
- PIPE BEDDING (IMPORTED)
- PIPE/BOX EXCAVATION

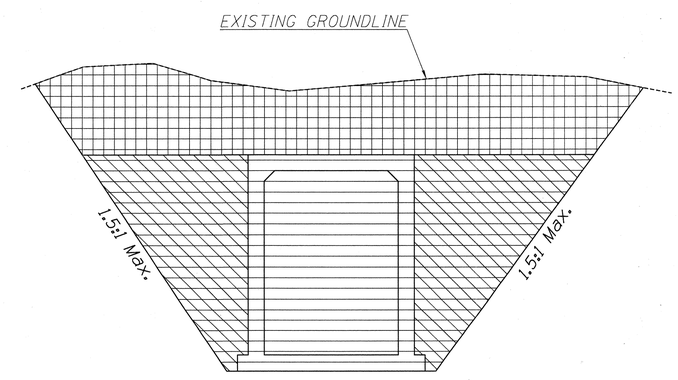

BOX EXCAVATION & BACKFILL
(SEE ADOT STANDARD NO. B-19.50)

Priscilla S. Cornelio, P.E., Director

No.	Revision Description	Engineer	Date

		Date
Designed	MDC/JDB/BGN	12/12
Drawn	MDC/JDB/BGN	12/12
Checked	JDS	12/12
Proj. Engr.	AJH	12/12

epsgroup, inc.
Engineers, Planners & Surveyors
2319 N. Thornydale Rd., Ste. 140, Tucson, Arizona 85742
Phone (520) 408-1400 Fax (520) 408-1403

Arizona Blue Stake 1-800-STAKE-IT 1-800-782-5348

Pima County Department of Transportation

GENERAL NOTES

MAGEE RD.
LA CAÑADA DR. - ORACLE RD. (SR 77)
PROJECT NO. 4MRLCO

MAGEE RD. IMPROVEMENTS - LA CAÑADA DR. TO ORACLE RD. (SR 77) - PROJECT NO. 4MRLCO

Scale:	N.T.S.	Sheet GN02 of GN02	Page 3 of 273

FILE NAME: s:\10-077 magee road\civil\cadd\gn\4MRLCO_GN02.dgn DATE: 12/27/12 TIME: 8:42:29 AM aherrera

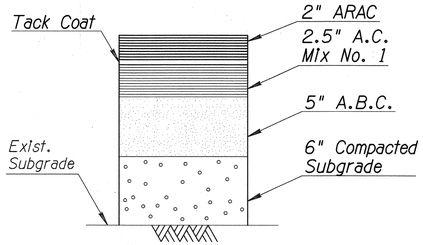

Total Thickness = 9.5"

PAVEMENT STRUCTURAL SECTION NO. 1

Magee Road:
La Canada Drive (Sta. 418+03) to Sta. 429+47
Sta. 434+45 to Sta. 454+45
Sta. 459+45 to Sta. 464+00

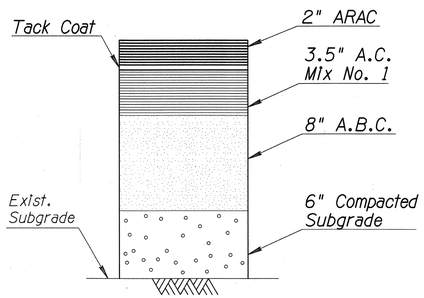

Total Thickness = 13.5"

PAVEMENT STRUCTURAL SECTION NO. 2

Magee Road:
Sta. 429+47 to Sta. 434+45

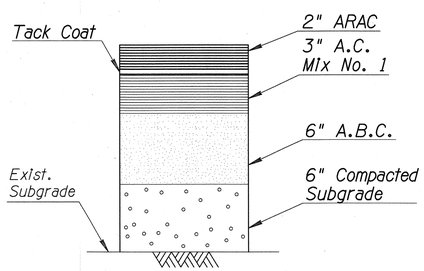

Total Thickness = 11"

PAVEMENT STRUCTURAL SECTION NO. 3

Magee Road:
Sta. 454+45 to Sta. 459+45

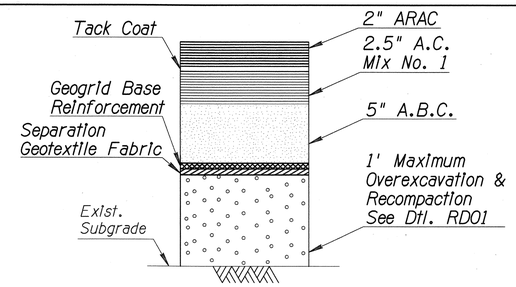

Total Thickness = 9.5"

PAVEMENT STRUCTURAL SECTION NO. 4

Magee Road:
Sta. 464+00 to Oracle Road (Sta. 478+74)

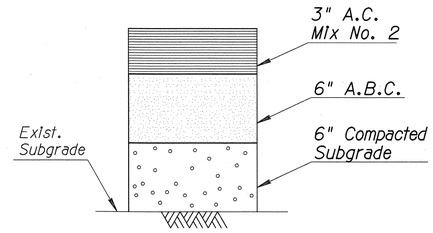

Total Thickness = 9"

PAVEMENT STRUCTURAL SECTION NO. 5

Magee Road:
Oracle Road (Sta. 479+92) to Village Avenue (Sta. 489+34)

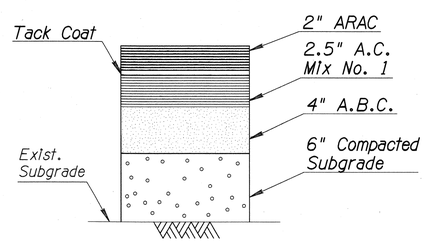

Total Thickness = 8.5"

PAVEMENT STRUCTURAL SECTION NO. 6

Northern Avenue

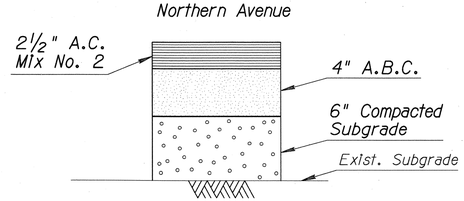

Total Thickness = 6 1/2"

PAVEMENT STRUCTURAL SECTION NO. 7

Magee Road & Northern Avenue Driveways*

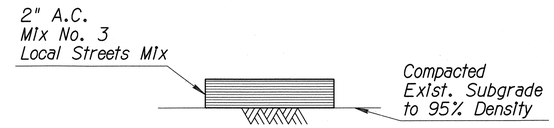

Total Thickness = 2"

PAVEMENT STRUCTURAL SECTION NO. 8

Multi-Use Path

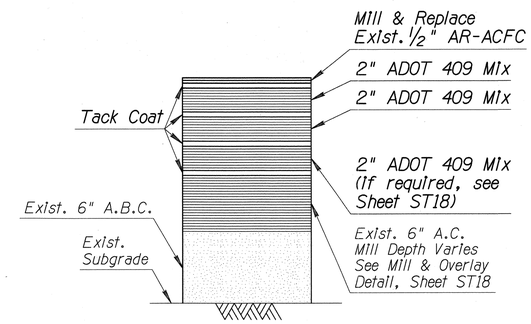

Total Thickness = Varies

PAVEMENT STRUCTURAL SECTION NO. 9

Magee Road & Oracle Road Intersection:
Magee Rd. Sta. 478+74 to Sta. 479+92

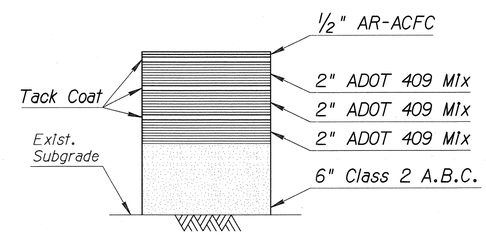

Total Thickness = Varies

PAVEMENT STRUCTURAL SECTION NO. 10

Oracle Road:
Left and Right-Turn Lanes, Median Pavement (See ST13)

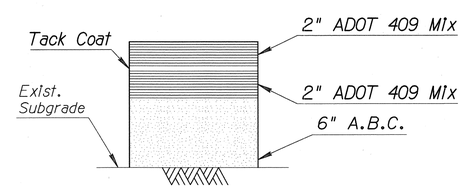

Total Thickness = 10"

PAVEMENT STRUCTURAL SECTION NO. 11

Oracle Road Driveways

* Typical Section No. 7 shall be used for driveways with concrete driveway aprons and/or driveway turnouts (see Detail RD02 and RD15).
The pavement structural sections for Side Streets/Driveways with curb returns shall match those of the adjacent roadway.
See Table on the right side of this page for a summary of the pavement structural sections to be used for each Side Street/Driveway.

F.H.W.A. REGION	STATE	PROJECT NO.	SHEET NO.	TOTAL SHEETS	AS BUILT
9	ARIZ.	STP-PPM-0(209)D	4	273	
		SS693 01C			

Driveway Pavement Structural Section Summary

Side Street Name or Driveway Station	Pavement Structural Section
El Tovar Pl., Lt.	1
Magee Rd. 422+35.22, Lt.	1
Magee Rd. 422+37.05, Rt.	1
Magee Rd. 424+69.28, Lt.	1
Leonardo Da Vinci Way, Rt.	1
Magee Rd. 430+97.34, Rt.	9" PCCP
Cool Dr., Lt.	2
Magee Rd. 433+82.76, Rt.	2
Vamori Dr., Rt.	1
W. Magee Rd., Lt.	1
La Oesta Ave., Lt.	1
Paseo Del Norte, Rt.	3
Placita Feliz, Lt.	1
Magee Rd. 462+65.45, Rt.	1
Magee Rd. 470+14.54, Rt.	4
Magee Rd. 470+24.42, Lt.	4
Magee Rd. 471+03.96, Rt.	4
Magee Rd. 471+28.33, Lt.	9" PCCP, 4
Magee Rd. 473+10.02, Rt.	4
Magee Rd. 473+15.05, Lt.	4
Magee Rd. 474+15.42, Lt.	4
Magee Rd. 475+05.31, Lt.	4
Magee Rd. 475+79.81, Lt.	4
Magee Rd. 476+49.00, Rt.	4
Magee Rd. 476+90.12, Lt.	4
Magee Rd. 481+70.26, Rt.	5
Magee Rd. 483+32.73, Lt.	5
Magee Rd. 484+41.88, Rt.	5
Magee Rd. 485+57.57, Lt.	5
Magee Rd. 486+17.21, Rt.	5
Magee Rd. 486+76.08, Lt.	5
Magee Rd. 488+81.79, Lt.	5
Northern Ave. 95+84.60, Rt.	6
Northern Ave. 96+14.04, Lt.	6
Northern Ave. 98+17.12, Rt.	6
Northern Ave. 103+35.15, Rt.	6
Northern Ave. 105+95.42, Lt.	6
Oracle Rd. 410+70.00, Rt.	11
Oracle Rd. 414+50.00, Lt.	11

Priscilla S. Cornelio, P.E., Director

No.	Revision Description	Engineer	Date

		Date
Designed	MDC/JDB/BGN	12/12
Drawn	MDC/JDB/BGN	12/12
Checked	JDS	12/12
Proj. Engr.	AJH	12/12

eps group, Inc.
Engineers, Planners & Surveyors
8710 N. Thornydale Rd., Ste. 140, Tucson, Arizona 85742
Phone (520) 408-1400 Fax (520) 408-4625

Arizona Blue Stake
1-800-STAKE-IT
1-800-782-5348
Do not remove, cover, bury, or damage this sign

Pima County Department of Transportation

PAVEMENT STRUCTURAL SECTIONS
MAGEE RD.
LA CAÑADA DR. - ORACLE RD. (SR 77)
PROJECT NO. 4MRLCO

MAGEE RD. IMPROVEMENTS - LA CAÑADA DR. TO ORACLE RD. (SR 77) - PROJECT NO. 4MRLCO

Scale: N.T.S. | Sheet TP01 of TP07 | Page 4 of 273

FILE NAME: S:\10-077 Magee Road\Civil\CADD\TP\4MRLCO_TP01.dgn | DATE: 12/27/12 | TIME: 5:06:09 PM | aherrera

F.H.W.A. REGION	STATE	PROJECT NO.	SHEET NO.	TOTAL SHEETS	AS BUILT
9	ARIZ.	STP-PPM-0(209)D	5	273	

SS693 01C

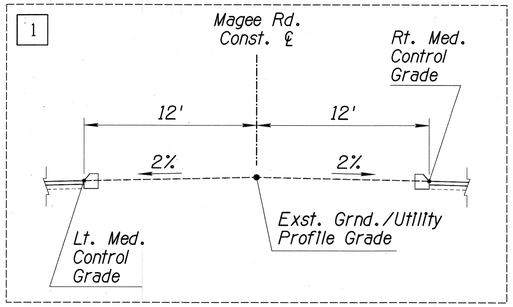

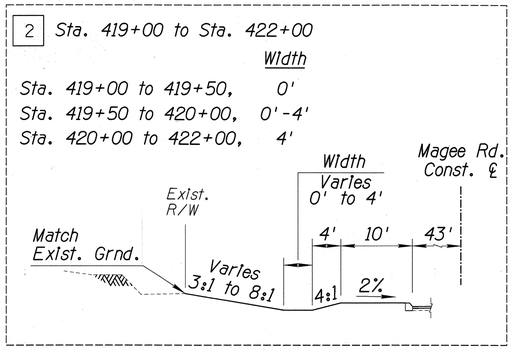

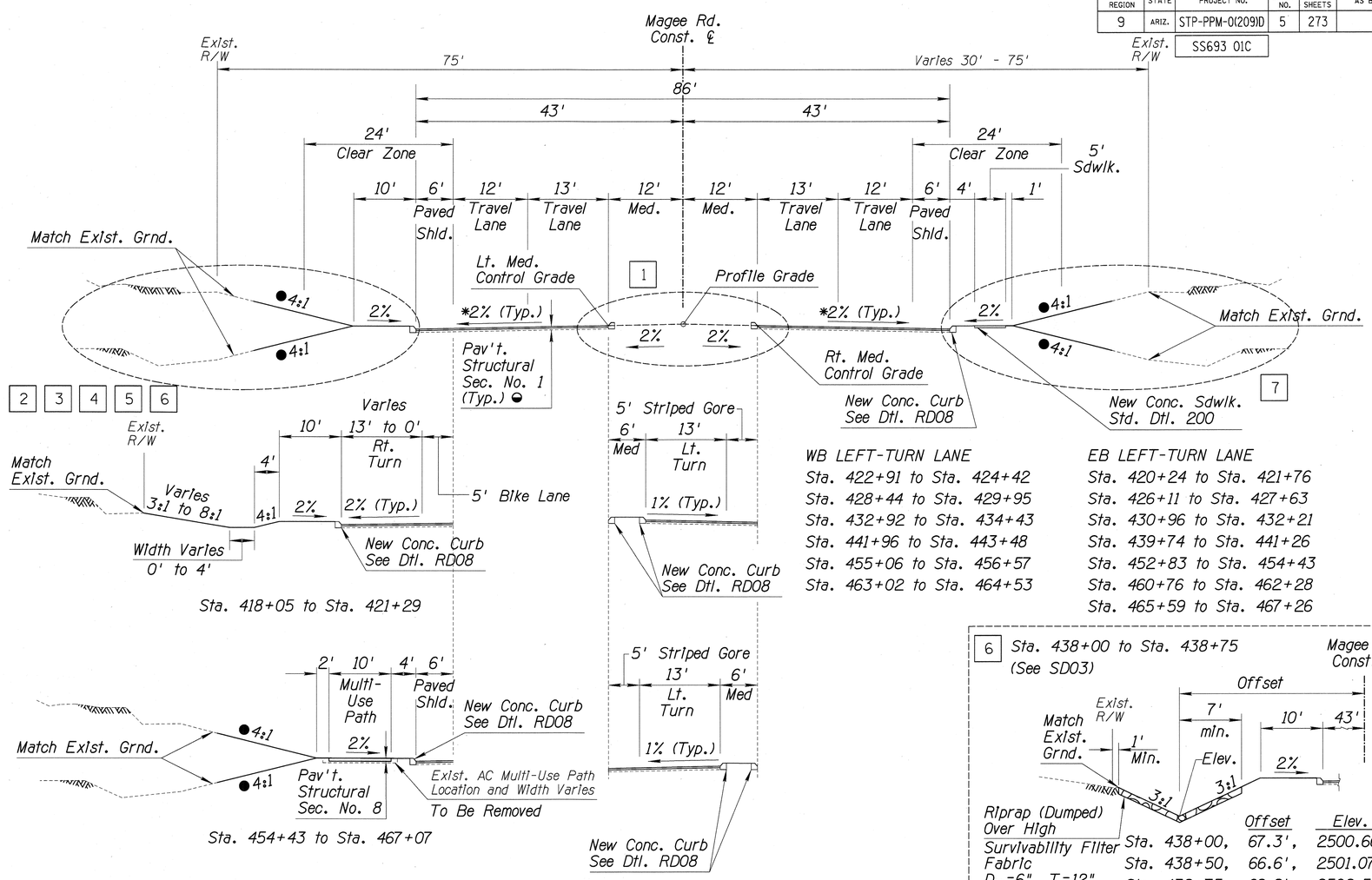

WB LEFT-TURN LANE
Sta. 422+91 to Sta. 424+42
Sta. 428+44 to Sta. 429+95
Sta. 432+92 to Sta. 434+43
Sta. 441+96 to Sta. 443+48
Sta. 455+06 to Sta. 456+57
Sta. 463+02 to Sta. 464+53

EB LEFT-TURN LANE
Sta. 420+24 to Sta. 421+76
Sta. 426+11 to Sta. 427+63
Sta. 430+96 to Sta. 432+21
Sta. 439+74 to Sta. 441+26
Sta. 452+83 to Sta. 454+43
Sta. 460+76 to Sta. 462+28
Sta. 465+59 to Sta. 467+26

Sta. 418+05 to Sta. 421+29

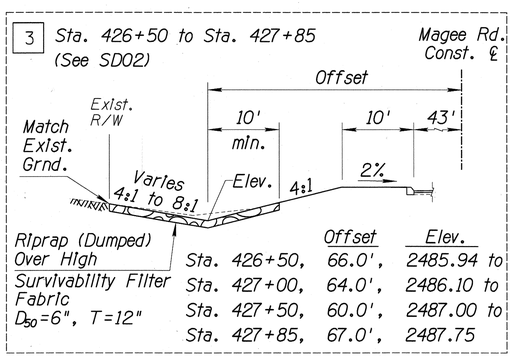

Sta. 454+43 to Sta. 467+07

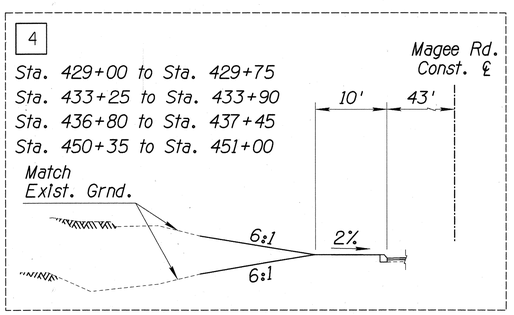

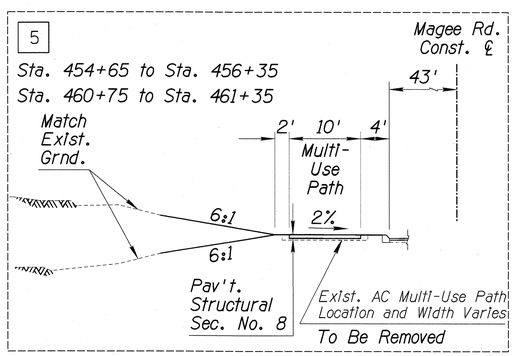

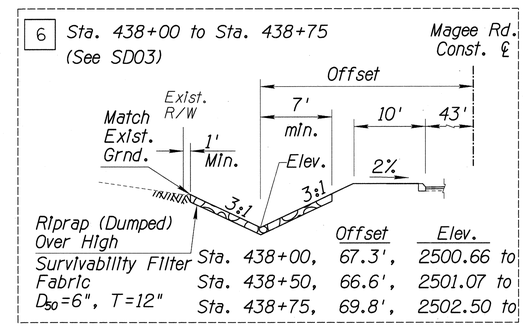

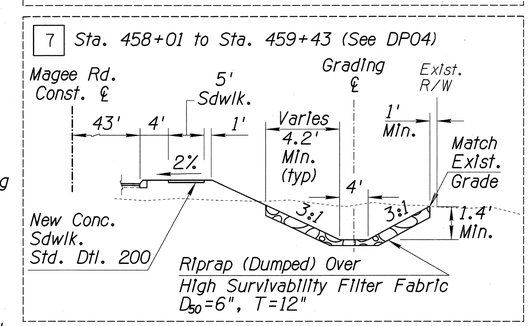

TYPICAL SECTION

MAGEE ROAD

Sta. 418+05 to Sta. 468+30

NOTES:

- * See Superelevation Diagram for locations where Pavement Cross Slope Varies.
- ● At locations where the 4:1 cut/fill slopes intercept the existing ground outside the R/W, the slopes should be steepened to intersect the R/W.
- ◒ Pavement Structural Section No. 1 from Sta 418+03 to Sta 429+47, Sta 434+45 to Sta 454+45, and Sta 459+45 to Sta 464+00. Pavement Structural Section No. 2 from Sta 429+47 to Sta 434+45. Pavement Structural Section No. 3 from Sta 454+45 to Sta 459+45. Pavement Structural Section No. 4 from Sta 464+00 to Sta 478+74.

Scale: N.T.S. | Sheet TP02 of TP07

Priscilla S. Cornelio, P.E., Director

	Designed	MDC/JDB/RGN	12/12
	Drawn	MDC/JDB/RGN	12/12
	Checked	JDS	12/12
	Proj. Engr.	AJH	12/12

No.	Revision Description	Engineer	Date

eps group, Inc.
Engineers, Planners & Surveyors
8700 E. Thornydale Rd., Ste. 145, Tucson, Arizona 85742
Phone: 520.744.9476

Arizona Blue Stake 1-800-STAKE-IT 1-800-782-5348

Pima County Department of Transportation

TYPICAL SECTIONS
MAGEE RD.
LA CAÑADA DR. - ORACLE RD. (SR 77)
PROJECT NO. 4MRLCO

MAGEE RD. IMPROVEMENTS - LA CAÑADA DR. TO ORACLE RD. (SR 77) - PROJECT NO. 4MRLCO

FILE NAME: s:\10-077 magee road\civil\cadd\tp\4MRLCO_TP02.dgn DATE: 12/27/12 TIME: 5:06:32 PM aherrera

F.H.W.A. REGION	STATE	PROJECT NO.	SHEET NO.	TOTAL SHEETS	AS BUILT
9	ARIZ.	STP-PPM-0(209)D	6	273	

SS693 01C

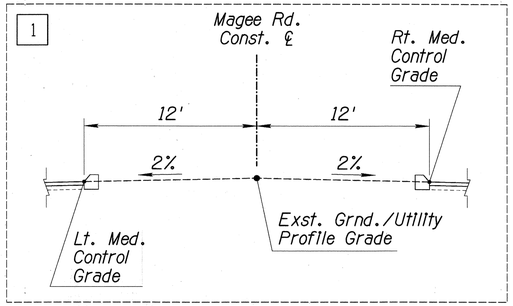

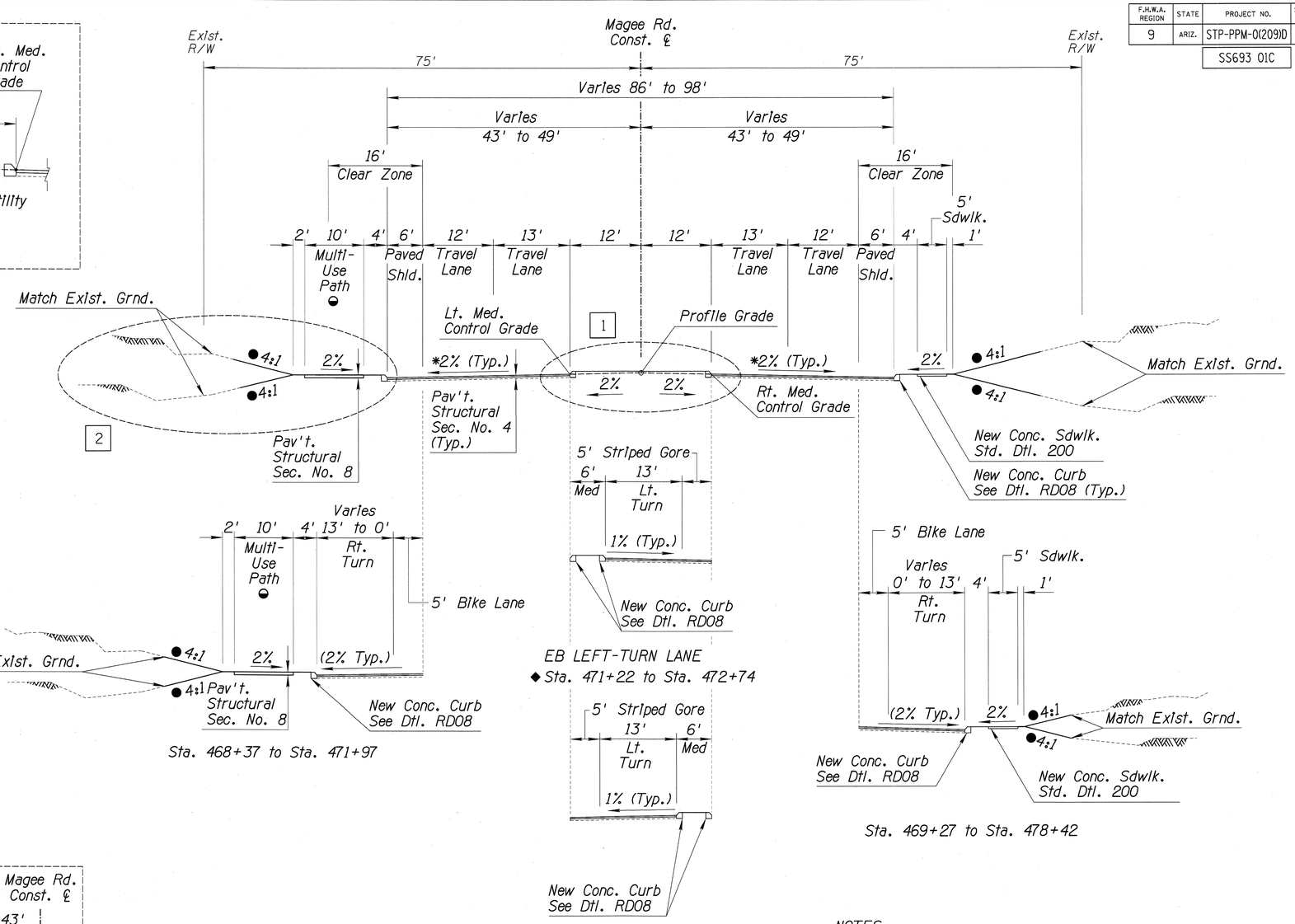

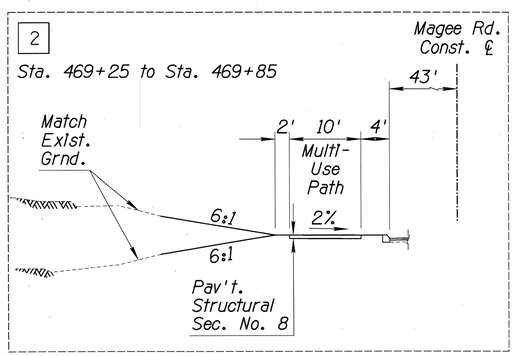

NOTES:

- ✱ See Superelevation Diagram for locations where Pavement Cross Slope Varies.
- ● At locations where the 4:1 cut/fill slopes would intercept the existing ground outside the R/W, the slopes were steepened to intersect the R/W.
- ◒ Multi-Use Path from Sta 468+50 to Sta 478+42
- ◆ Gore Width Varies at this Left-Turn Location Due to Median Taper. See Plans.

TYPICAL SECTION

MAGEE RD.
Sta. 468+30 to Sta. 470+22

Priscilla S. Cornelio, P.E., Director

Designed	MDC/DB/BGN	12/12
Drawn	MDC/DB/BGN	12/12
Checked	JDS	12/12
Proj. Engr.	AJH	12/12

No.	Revision Description	Engineer	Date

Pima County Department of Transportation

TYPICAL SECTIONS
MAGEE RD.
LA CAÑADA DR. - ORACLE RD. (SR 77)
PROJECT NO. 4MRLCO

epsgroup, Inc.
Engineers, Planners & Surveyors
8710 N. Thornydale Rd., Ste. 145, Tucson, Arizona 85742
Phone (520) 744-9537 Fax (520) 744-9539

Arizona Blue Stake
1-800-STAKE-IT
1-800-782-5348
Call the Working Days Before You Dig

MAGEE RD. IMPROVEMENTS - LA CAÑADA DR. TO ORACLE RD. (SR 77) - PROJECT NO. 4MRLCO

Scale:	N.T.S.	Sheet TP03 of TP07	Page 6 of 273

FILE NAME: s:\10-077 magee road\civil\cadd\tp\4MRLCO_TP03.dgn DATE: 12/27/12 TIME: 5:06:34 PM aherrera

F.H.W.A. REGION	STATE	PROJECT NO.	SHEET NO.	TOTAL SHEETS	AS BUILT
9	ARIZ.	STP-PPM-0(209)D	7	273	

SS693 01C

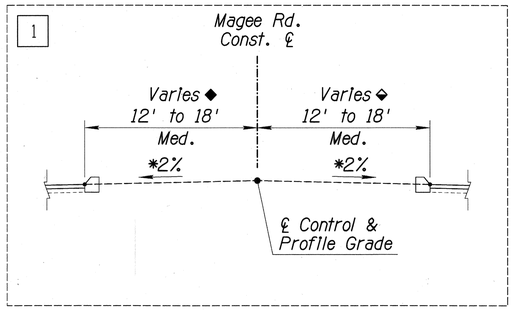

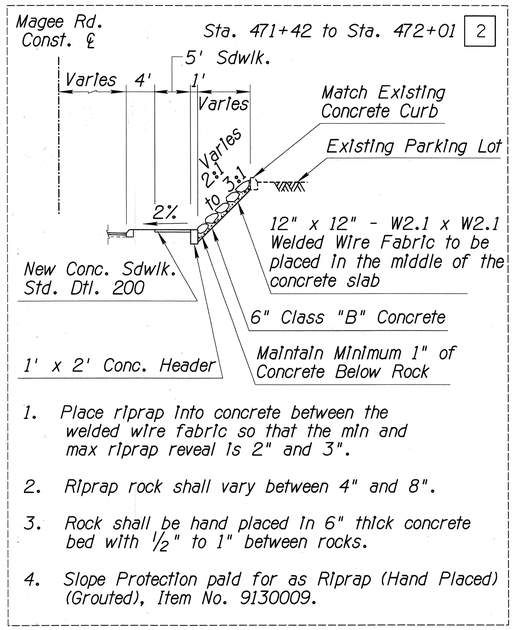

1. Place riprap into concrete between the welded wire fabric so that the min and max riprap reveal is 2" and 3".
2. Riprap rock shall vary between 4" and 8".
3. Rock shall be hand placed in 6" thick concrete bed with ½" to 1" between rocks.
4. Slope Protection paid for as Riprap (Hand Placed) (Grouted), Item No. 9130009.

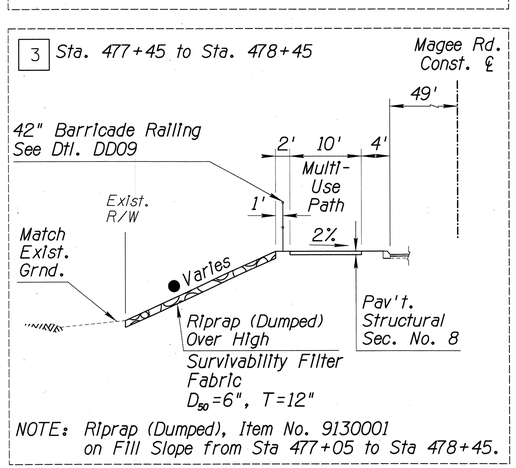

NOTE: Riprap (Dumped), Item No. 9130001 on Fill Slope from Sta 477+05 to Sta 478+45.

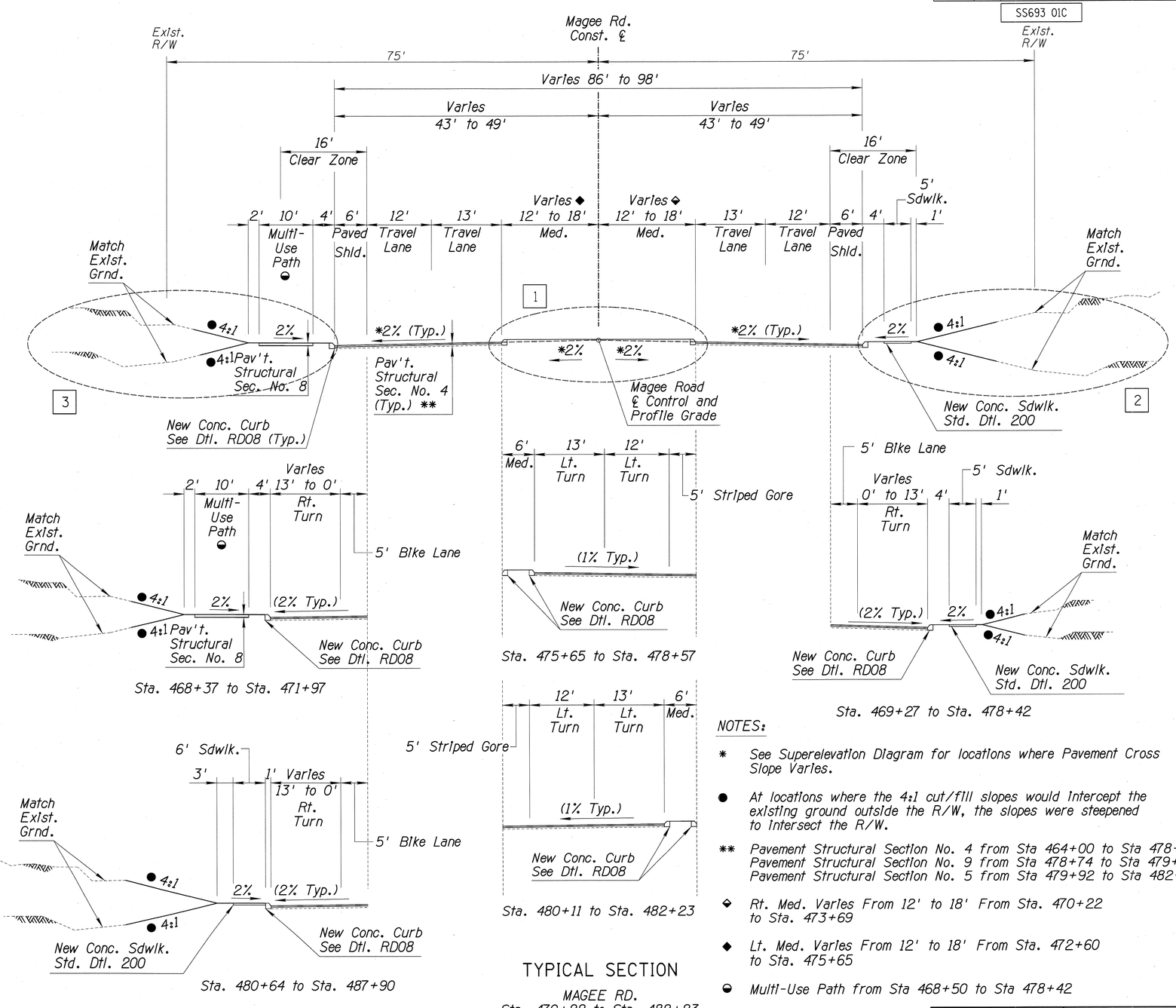

TYPICAL SECTION

MAGEE RD.
Sta. 470+22 to Sta. 482+23

NOTES:

- * See Superelevation Diagram for locations where Pavement Cross Slope Varies.
- ● At locations where the 4:1 cut/fill slopes would intercept the existing ground outside the R/W, the slopes were steepened to intersect the R/W.
- ** Pavement Structural Section No. 4 from Sta 464+00 to Sta 478+74.
  Pavement Structural Section No. 9 from Sta 478+74 to Sta 479+92.
  Pavement Structural Section No. 5 from Sta 479+92 to Sta 482+23.
- ◆ Rt. Med. Varies From 12' to 18' From Sta. 470+22 to Sta. 473+69
- ◆ Lt. Med. Varies From 12' to 18' From Sta. 472+60 to Sta. 475+65
- ◒ Multi-Use Path from Sta 468+50 to Sta 478+42

Scale:	N.T.S.	Sheet TP04 of TP07

Priscilla S. Cornelio, P.E., Director

Designed	MDC/JDB/BGN	12/12
Drawn	MDC/JDB/BGN	12/12
Checked	JDS	12/12
Proj. Engr.	AJH	12/12

No.	Revision Description	Engineer	Date

eps group, inc.
Engineers, Planners & Surveyors
8755 N. Thornydale Rd., Ste. 145, Tucson, Arizona 85742
Phone (520) 544-9861 Fax (520) 544-9864

Arizona Blue Stake
1-800-STAKE-IT
1-800-782-5348

Pima County Department of Transportation

TYPICAL SECTIONS

MAGEE RD.
LA CAÑADA DR. - ORACLE RD. (SR 77)
PROJECT NO. 4MRLCO

Page 7 of 273

MAGEE RD. IMPROVEMENTS - LA CAÑADA DR. TO ORACLE RD. (SR 77) - PROJECT NO. 4MRLCO

FILE NAME: s:\10-077 magee road\civil\cadd\tp\4MRLCO_TP04.dgn DATE: 12/27/12 TIME: 5:06:37 PM aherrera

F.H.W.A. REGION	STATE	PROJECT NO.	SHEET NO.	TOTAL SHEETS	AS BUILT
9	ARIZ.	STP-PPM-0(209)D	8	273	

SS693 01C

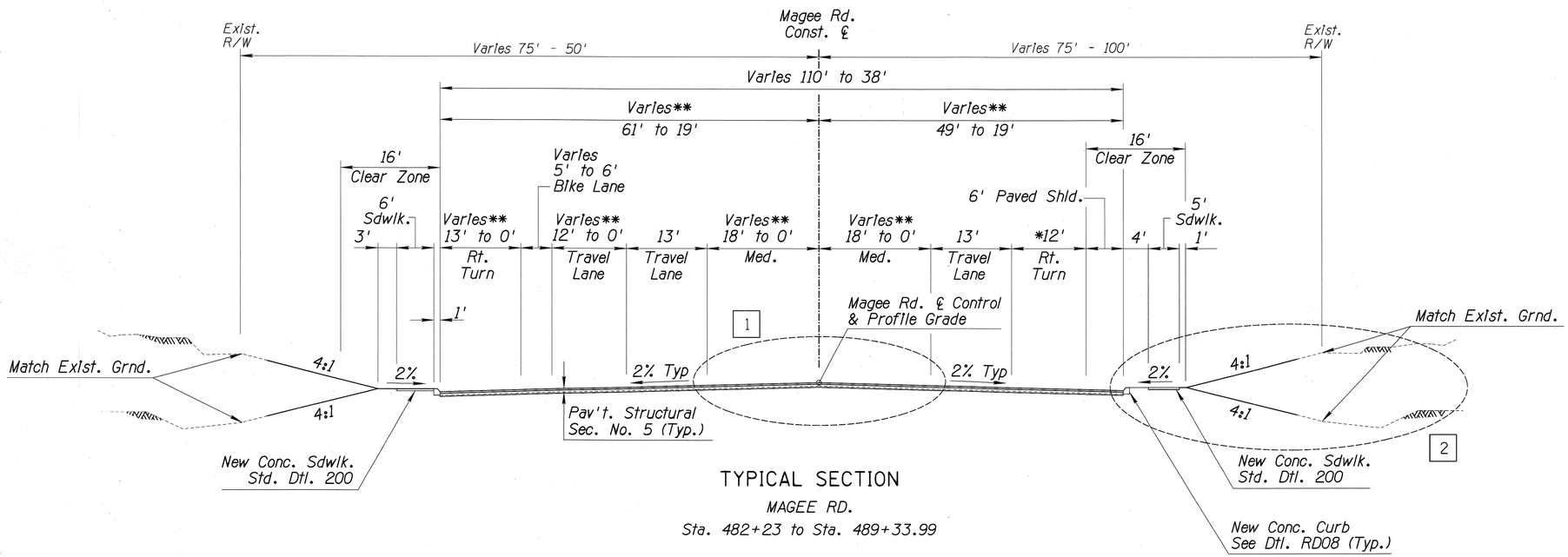

TYPICAL SECTION

MAGEE RD.

Sta. 482+23 to Sta. 489+33.99

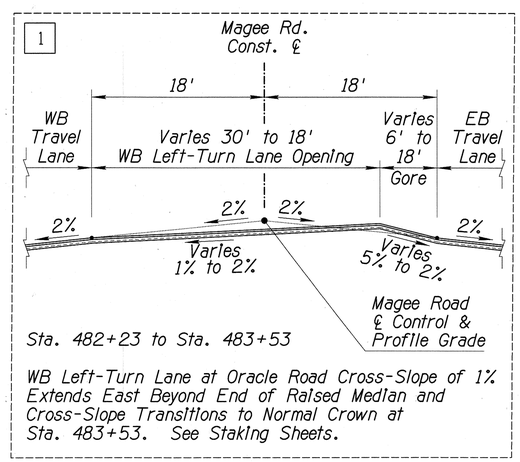

Sta. 482+23 to Sta. 483+53

WB Left-Turn Lane at Oracle Road Cross-Slope of 1% Extends East Beyond End of Raised Median and Cross-Slope Transitions to Normal Crown at Sta. 483+53. See Staking Sheets.

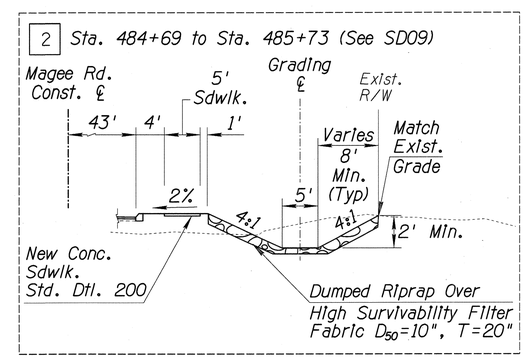

NOTES:

* Right Turn Lane From Sta. 480+23 to Sta. 484+03

** Lane Widths Vary Due to Taper From Sta. 483+53 to Sta. 487+90

Priscilla S. Cornelio, P.E., Director

No.	Revision Description	Engineer	Date

		Date
Designed	MDC/JDB/BGN	12/12
Drawn	MDC/JDB/BGN	12/12
Checked	JDS	12/12
Proj. Engr.	AJH	12/12

eps group, Inc.
Engineers, Planners & Surveyors
2115 N. Thornydale Rd., Ste. 140, Tucson, Arizona 85742
Phone: (520) 744-9500 Fax: (520) 744-9507

Arizona Blue Stake, Inc.
1-800-STAKE-IT
1-800-782-5348
Call two working days before you dig

Pima County Department of Transportation

TYPICAL SECTIONS

MAGEE RD.
LA CAÑADA DR. - ORACLE RD. (SR 77)
PROJECT NO. 4MRLCO

MAGEE RD. IMPROVEMENTS - LA CAÑADA DR. TO ORACLE RD. (SR 77) - PROJECT NO. 4MRLCO

Scale:	N.T.S.	Sheet TP05 of TP07	Page 8 of 273

FILE NAME: s:\10-077 magee road\civil\cadd\tp\4MRLCO_TP05.dgn DATE: 12/27/12 TIME: 5:06:40 PM aherrera

F.H.W.A. REGION	STATE	PROJECT NO.	SHEET NO.	TOTAL SHEETS	AS BUILT
9	ARIZ.	STP-PPM-0(209)D	9	273	

SS693 01C

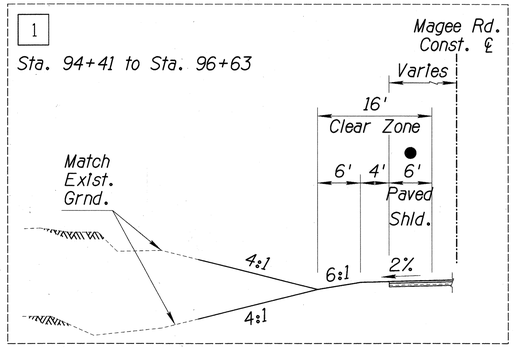

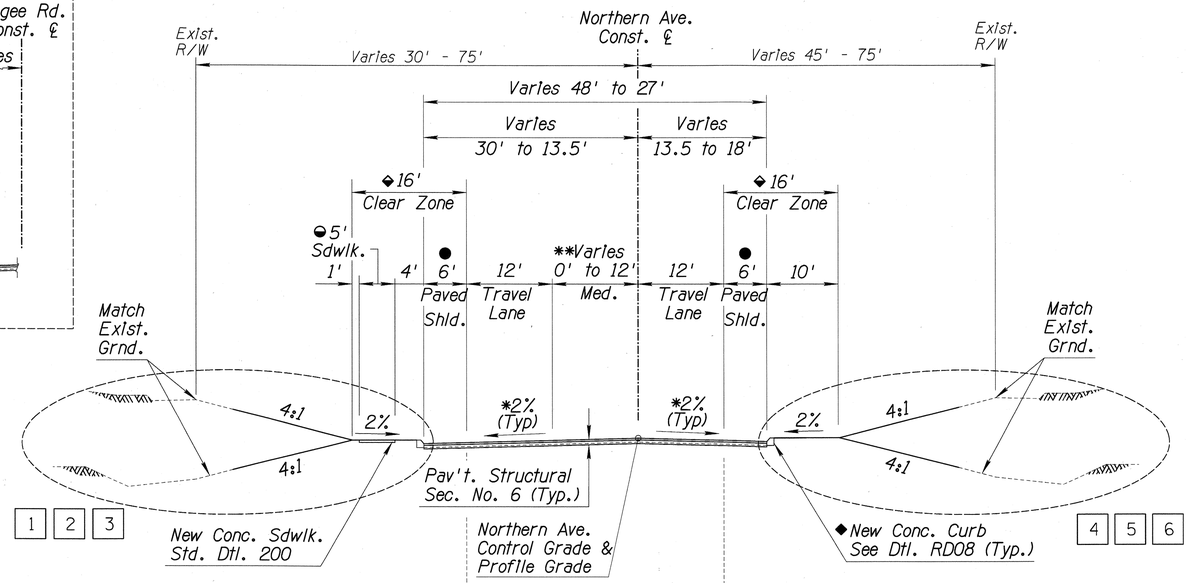

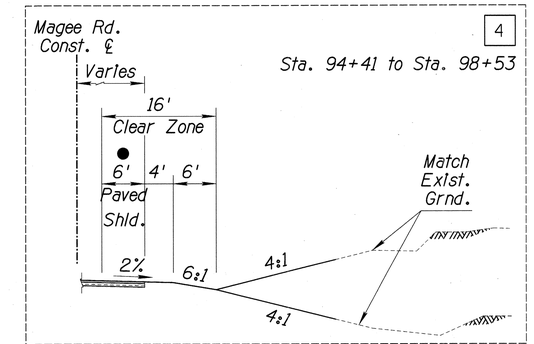

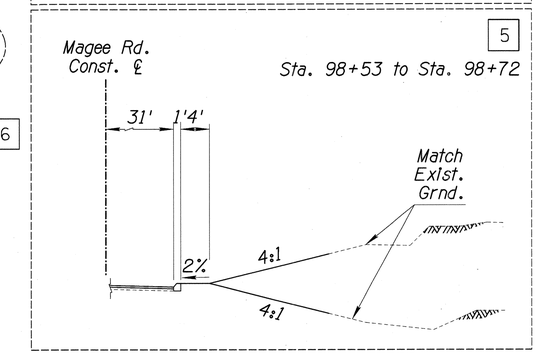

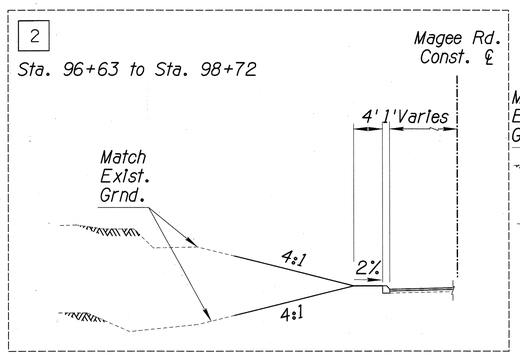

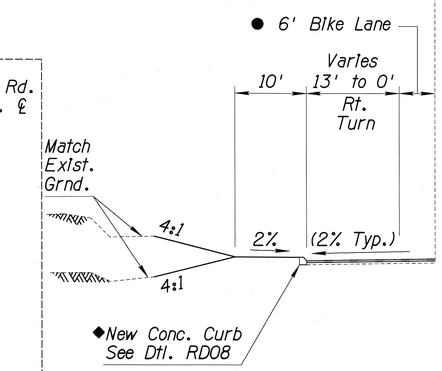

Sta. 100+78 to Sta. 104+30

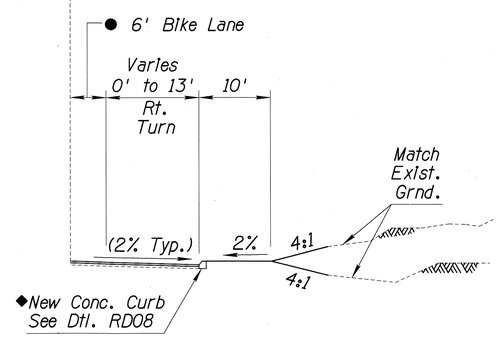

Sta. 96+22 to Sta. 99+22

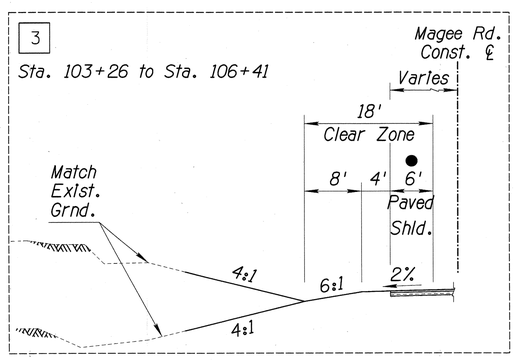

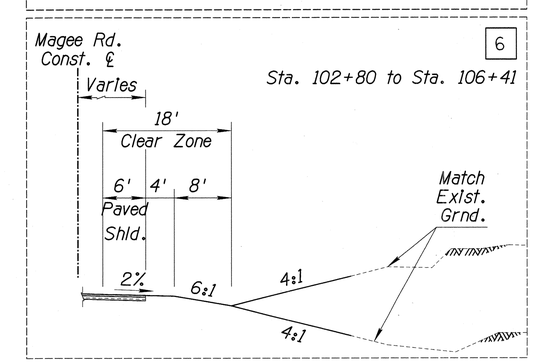

TYPICAL SECTION

NORTHERN AVE.

Sta. 94+41 to Sta. 106+41

NOTES:

- ✱ See Superelevation Diagram for locations where Pavement Cross Slope Varies.
- ◒ Sidewalk From Sta. 98+72 to Sta. 99+22.
- ✱✱ Med. Varies From 0' to 12' From Sta. 94+41 to Sta. 97+56.
- ● Northbound Paved Shoulder/Bike Lane Varies From 1.5' to 6' from Sta. 94+41 to Sta. 95+46. Southbound Paved Shoulder/Bike Lane Varies from 1.7' to 6' from Sta. 94+41 to Sta. 95+68.
- ◆ Refer to Staking Sheets ST16 & ST17 for Limits of Curb.
- ◈ Clear Zone Is 16' South of Magee Road and 18' North of Magee Road.

Scale: N.T.S. | Sheet TP06 of TP07

Priscilla S. Cornelio, P.E., Director

No.	Revision Description	Engineer	Date

		Date
Designed	MDC/JDB/BGN	12/12
Drawn	MDC/JDB/BGN	12/12
Checked	JDS	12/12
Proj. Engr.	AJH	12/12

eps group, Inc.
Engineers, Planners & Surveyors
Phone: (928) 468-1468 Fax: (928) 468-1483

Arizona Blue Stakes
1-800-STAKE-IT
(Call two working days before you dig)

Pima County Department of Transportation

TYPICAL SECTIONS
MAGEE RD.
LA CAÑADA DR. - ORACLE RD. (SR 77)
PROJECT NO. 4MRLCO

MAGEE RD. IMPROVEMENTS - LA CAÑADA DR. TO ORACLE RD. (SR 77) - PROJECT NO. 4MRLCO

FILE NAME: s:\10-077 magee road\civil\cadd\tp\4MRLCO_TP06.dgn DATE: 12/27/12 TIME: 5:06:42 PM aherrera

F.H.W.A. REGION	STATE	PROJECT NO.	SHEET NO.	TOTAL SHEETS	AS BUILT
9	ARIZ.	STP-PPM-0(209)D	9a	273	
		SS693 01C			

NOTES:

* NB Right Turn-Lane Varies from 0' to 12' and Shoulder Varies from 10' to 4' from Sta 409+01 to Sta 409+44. SB Right Turn-Lane Varies from 12' to 0' and Shoulder Varies from 4' to 10' from Sta 415+29 to Sta 416+22.

● ADOT Std. C-02.10 Slopes.

◒ Match Exst. Cross Slope (2% Typ). See ST13 for Pavement Grades through Magee Road Intersection.

◆ Median Width Varies from 16' to 4'.

◈ Pavement Structural Section No. 9 from Sta 411+04 to Sta 413+74. See ST13.

■ Sawcut Varies, located One Foot from Existing Face of Curb Along Existing Left-Turn Taper.

** From Sta 414+98 to Sta 416+38, SB Left-Turn Lane Varies from 14' to 0', SB Inside Through Lane Varies fom 12' to 14', NB Inside Through Lane Varies from 14' to 12', and NB Left-Turn Lane Is Developed Varying from 0' to 14' on the Right Side of the 4-Foot Median.

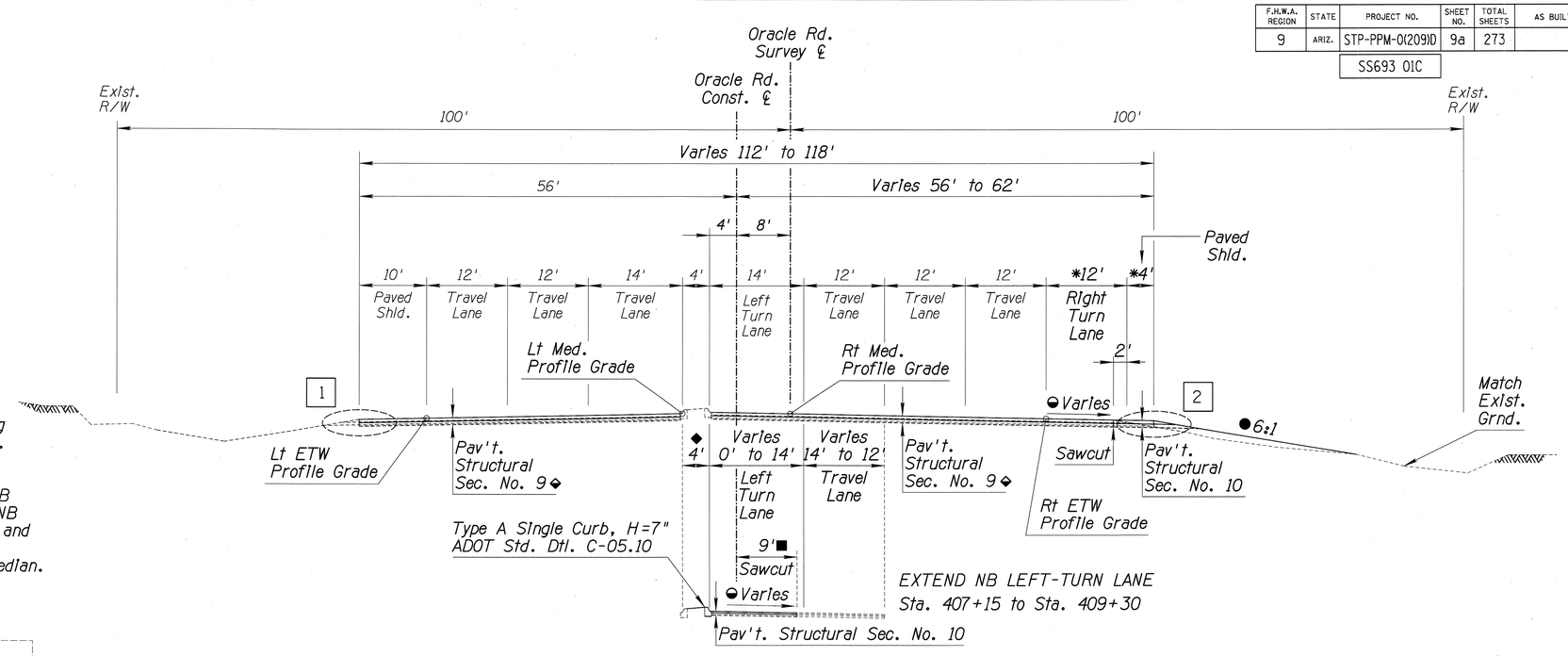

TYPICAL SECTION

ORACLE RD.
Sta. 407+15 to Sta. 411+47

1 Type D Curb & Gutter, H=6" Around Curb Return Radii Sta. 411+04 to Sta. 411+52 and Sta. 412+66 to Sta. 413+25

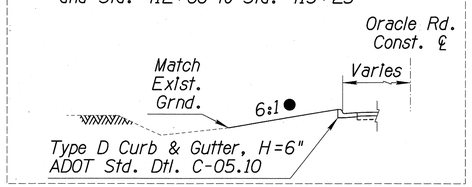

2 Type D Curb & Gutter, H=6" Around Curb Return Radii Sta. 411+47 to Sta. 412+06 Sta. 413+20 to Sta. 413+74

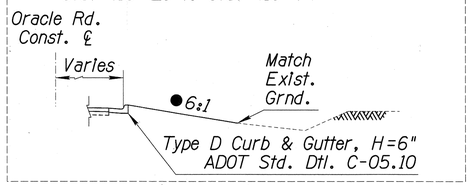

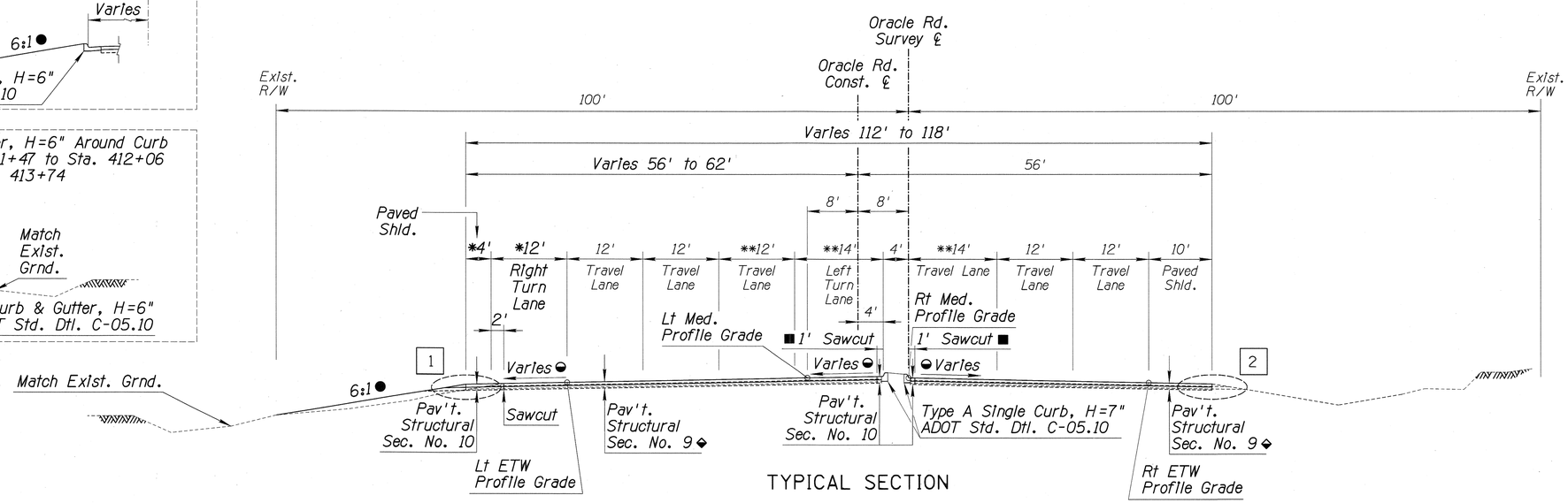

TYPICAL SECTION

ORACLE RD.
Sta. 413+25 to Sta. 416+54

Scale:	N.T.S.	Sheet TP07 of TP07	Page 9a of 273

Pima County Department of Transportation

TYPICAL SECTIONS
MAGEE RD.
LA CAÑADA DR. - ORACLE RD. (SR 77)
PROJECT NO. 4MRLCO

eps group, Inc.
Engineers, Planners & Surveyors
Phone: 520-325-8833 Fax: 520-325-8834
7878 N. Shannon Rd., Ste. 140, Tucson, Arizona 85742

Arizona Blue Stake
1-800-STAKE-IT
1-800-782-5348
Call two working days before you dig

No.	Revision Description	Engineer	Date

		Date
Designed	MDC/JDS/BGN	12/12
Drawn	MDC/JDS/BGN	12/12
Checked	JDS	12/12
Proj. Engr.	A.JH	12/12

Priscilla S. Cornello, P.E., Director

MAGEE RD. IMPROVEMENTS - LA CAÑADA DR. TO ORACLE RD. (SR 77) - PROJECT NO. 4MRLCO

FILE NAME: s:\10-077 magee road\civil\cadd\tp\4MRLCO_TP07.dgn DATE: 12/27/12 TIME: 5:06:44 PM aherrera

CURB SUMMARY SHEET

LOCATION	Concrete Vertical Curb (L.F.) See Detail RD08, Item #9080001	Single Curb, Type A, H=7" (L.F.) See ADOT Std. C-05.10, Item #9080030	Curb & Gutter, Type D, H=6" (L.F.) See ADOT Std. C-05.10, Item #9080063	6" Concrete Header (L.F.) See Detail RD10, Item #9080402	12" Concrete Header (L.F.) See Detail RD10, Item #9080402	Concrete Wedge Curb (L.F.) See Detail RD09, Item #9080006	Concrete Curb Transition Conc. Vert. Curb to Conc. Wedge Curb (L.F.) See Detail RD13, Item #9080112	Concrete Curb Transition Conc. Vert. Curb to Conc. Curb & Gutter (L.F.) See Detail RD12, Item #9080112	Concrete Curb Transition Conc. Vert. Curb to Curb Terminal to Conc. Header (Each) See Detail RD14, Item #9080090	Curb & Gutter Transition, Type 7 (Each) See ADOT Std. C-05.12, Item #9080107	Concrete Curb Terminal Section (Each) See Detail RD11, Item #9080090	NOTES
MAGEE RD. (SHEET PP01):												
417+93.15, 58.00' Lt. To 418+03.15, 58.00' Lt.								10				
418+03.15, 58.00' Lt. To 418+51.85, 86.00' Lt.	63										1	End
418+80.72, 85.93' Lt. To 422+11.76, 95.00' Lt.	401										1	Begin
422+61.16, 95.00' Lt. To 423+00.00, 43.00' Lt.	99											
417+93.15, 48.00' Rt. To 418+03.15, 48.00' Rt.								10				
418+03.15, 48.00' Rt. To 422+09.05, 75.00' Rt.	419											
422+60.05, 75.00' Rt. To 423+00.00, 47.66' Rt.	56											
417+93.15, 6.00' Rt. To 421+75.54, 8.89' Lt. (Med. Lt.)	386											
422+90.55, 8.89' Rt. To 423+00.00, 6.11' Rt. (Med. Lt.)	11											
417+93.15, 12.00' Rt. To 421+75.54, 8.89' Lt. (Med. Rt.)	386											
422+90.55, 8.89' Rt. To 423+00.00, 11.82' Rt. (Med. Rt.)	11											
TOTALS (SHEET PP01):	**1,832**	**0**	**0**	**0**	**0**	**0**	**0**	**20**	**0**	**0**	**2**	
MAGEE RD. (SHEET PP02):												
423+00.00, 43.00' Lt. To 424+56.85, 75.00' Lt.	178											
424+81.71, 75.00' Lt. To 429+17.09, 43.00' Lt.	457											
429+17.09, 43.00' Lt. To 429+57.09, 43.00' Lt.						20	20					
429+57.09, 43.00' Lt. To 432+00.00, 43.00' Lt.	244											
423+00.00, 47.66' Rt. To 424+29.78, 44.77' Rt.	130											
424+29.78, 44.77' Rt. To 424+69.77, 43.88' Rt.						20	20					
424+69.77, 43.88' Rt. To 427+88.97, 71.04' Rt.	334										1	End
428+14.31, 70.96' Rt. To 430+53.88, 93.40' Rt.	319										1	Begin
431+38.64, 82.84' Rt. To 432+00.00, 43.00' Rt.	117											
423+00.00, 6.11' Rt. To 427+63.02, 9.00' Lt. (Med. Lt.)	466											
428+44.00, 9.00' Rt. To 430+56.82, 6.63' Lt. (Med. Lt.)	216											
430+56.82, 6.63' Lt. To 431+21.70, 12.00' Lt. (Med. Lt.)					59				2			Begin & End
431+21.70, 12.00' Lt. To 432+00.00, 12.00' Lt. (Med. Lt.)	78											
423+00.00, 11.82' Rt. To 427+63.02, 9.00' Lt. (Med. Rt.)	466											
428+44.00, 9.00' Rt. To 430+58.28, 0.99' Lt. (Med. Rt.)	217											
430+58.28, 0.99' Lt. To 431+21.70, 6.00' Lt. (Med. Rt.)					58				2			Begin & End
431+21.70, 6.00' Lt. To 432+00.00, 6.00' Lt. (Med. Rt.)	78											
427+89.69, 54.00' Lt. To 427+88.71, 95.00' Lt.				41								
428+14.06, 95.00' Lt. To 428+19.22, 54.00' Lt.				42								
428+47.70, 54.00' Lt. To 428+51.04, 89.00' Lt.				36								
428+51.55, 89.36' Lt. To 428+62.61, 89.36' Lt.				12								
428+63.13, 89.35' Lt. To 428+67.91, 54.00' Lt.				38								
TOTALS (SHEET PP02):	**3,300**	**0**	**0**	**169**	**117**	**40**	**40**	**0**	**4**	**0**	**2**	
MAGEE RD. (SHEET PP03):												
432+00.00, 43.00' Lt. To 432+50.51, 71.67' Lt.	66										1	End
432+73.54, 70.91' Lt. To 433+31.22, 43.00' Lt.	72										1	Begin
433+31.22, 43.00' Lt. To 433+71.22, 43.00' Lt.						20	20					
433+71.22, 43.00' Lt To 434+46.07, 43.00' Lt.	75											
434+46.07, 43.00' Lt. To 434+86.07, 43.00' Lt.						20	20					
434+86.07, 43.00' Lt. To 436+93.66, 43.00' Lt.	208											
436+93.66, 43.00' Lt. To 437+33.66, 43.00' Lt.						20	20					

LOCATION	Concrete Vertical Curb (L.F.) See Detail RD08, Item #9080001	Single Curb, Type A, H=7" (L.F.) See ADOT Std. C-05.10, Item #9080030	Curb & Gutter, Type D, H=6" (L.F.) See ADOT Std. C-05.10, Item #9080063	6" Concrete Header (L.F.) See Detail RD10, Item #9080402	12" Concrete Header (L.F.) See Detail RD10, Item #9080402	Concrete Wedge Curb (L.F.) See Detail RD09, Item #9080006	Concrete Curb Transition Conc. Vert. Curb to Conc. Wedge Curb (L.F.) See Detail RD13, Item #9080112	Concrete Curb Transition Conc. Vert. Curb to Conc. Curb & Gutter (L.F.) See Detail RD12, Item #9080112	Concrete Curb Transition Conc. Vert. Curb to Curb Terminal to Conc. Header (Each) See Detail RD14, Item #9080090	Curb & Gutter Transition, Type 7 (Each) See ADOT Std. C-05.12, Item #9080107	Concrete Curb Terminal Section (Each) See Detail RD11, Item #9080090	NOTES
MAGEE RD. (SHEET PP03 Continued):												
437+33.66, 43.00' Lt. To 439+02.67, 71.87' Lt.	184										1	End
439+26.98, 71.83' Lt. To 441+00.00, 43.00' Lt.	189										1	Begin
432+00.00, 43.00' Rt. To 433+63.95, 71.00' Rt.	178										1	End
434+01.57, 71.00' Rt. To 437+17.77, 71.19' Rt.	345										2	Begin & End
437+41.77, 70.81' Rt. To 441+00.00, 43.00' Rt.	373										1	Begin
432+00.00, 12.00' Lt. To 432+20.54, 9.00' Lt. (Med. Lt.)	22											
432+91.55, 9.00' Rt. To 441+00.00, 12.00' Lt. (Med. Lt.)	812											
432+00.00, 6.00' Lt. To 432+20.54, 9.00' Lt. (Med. Rt.)	22											
432+91.55, 9.00' Rt. To 441+00.00, 6.00' Lt. (Med. Rt.)	812											
435+35.08, 95.00' Lt. To 435+44.72, 85.64' Lt.				13								
436+36.12, 84.41' Lt. To 436+53.36, 99.74' Lt.				24								
439+96.53, 75.00' Rt. To 440+08.85, 75.00' Rt.				12								
TOTALS (SHEET PP03):	**3,358**	**0**	**0**	**49**	**0**	**60**	**60**	**0**	**0**	**0**	**8**	
MAGEE RD. (SHEET PP04):												
441+00.00, 43.00' Lt. To 441+56.23, 70.94' Lt.	70										1	End
441+78.30, 71.00' Lt. To 450+00.00, 43.00' Lt.	839										1	Begin
441+00.00, 43.00' Rt. To 450+00.00, 43.00' Rt.	900											
441+00.00, 12.00' Lt. To 441+25.55, 9.00' Lt. (Med. Lt.)	26											
441+96.02, 9.00' Rt. To 450+00.00, 12.00' Lt. (Med. Lt.)	808											
441+00.00, 6.00' Lt. To 441+25.55, 9.00' Lt. (Med. Rt.)	26											
441+96.02, 9.00' Rt. To 450+00.00, 12.00' Rt. (Med. Rt.)	806											
441+67.96, 88.39' Rt. To 441+72.02, 95.00' Rt.				8								
443+14.43, 75.00' Lt. To 443+30.21, 75.00' Lt.				16								
444+33.90, 75.00' Lt. To 444+67.38, 75.00' Lt.				33								
448+16.18, 75.00' Lt. To 448+38.27, 75.00' Lt.				22								
TOTALS (SHEET PP04):	**3,475**	**0**	**0**	**79**	**0**	**0**	**0**	**0**	**0**	**0**	**2**	
MAGEE RD. (SHEET PP05):												
450+00.00, 43.00' Lt. To 450+40.00, 43.00' Lt.	40											
450+40.00, 43.00' Lt. To 450+80.00, 43.00' Lt.						20	20					
450+80.00, 43.00' Lt. To 455+76.78, 43.00' Lt.	497											
455+76.78, 43.00' Lt. To 456+16.78, 43.00' Lt.						20	20					
456+16.78, 43.00' Lt. To 459+00.00, 47.00' Lt.	284											
450+00.00, 43.00' Rt. To 454+52.08, 70.99' Rt.	466										1	End
454+88.05, 71.01' Rt. To 459+00.00, 43.00' Rt.	426										1	Begin
450+00.00, 12.00' Lt. To 454+42.59, 9.00' Lt. (Med. Lt.)	443											
455+05.54, 9.00' Rt. To 459+00.00, 12.00' Lt. (Med. Lt.)	398											
450+00.00, 12.00' Rt. To 454+42.59, 9.00' Lt. (Med. Rt.)	445											
455+05.54, 9.00' Rt. To 459+00.00, 12.00' Rt. (Med. Rt.)	396											
457+52.23, 75.00' Lt. To 457+68.16, 75.00' Lt.				16								
458+53.37, 75.00' Lt. To 458+76.00, 75.00' Lt.				7								
458+92.30, 75.00' Lt. To 459+00.00, 75.00' Lt.				23								
TOTALS (SHEET PP05):	**3,395**	**0**	**0**	**46**	**0**	**40**	**40**	**0**	**0**	**0**	**2**	
SHEET TOTALS:	**15,360**	**0**	**0**	**343**	**117**	**140**	**140**	**20**	**4**	**0**	**16**	

NOTES:
1. ALL STATIONS AND OFFSETS ARE TO THE EDGE OF PAVEMENT.
2. BEGIN = TREATMENT AT BEGINNING. END = TREATMENT AT END.
3. ALL CURB LENGTHS DO NOT INCLUDE STORM DRAIN INLET LENGTHS AND SIDEWALK SCUPPERS.
4. REFER TO PC/COT STD. DTL. 211 FOR CONCRETE CURB CONNECTIONS TO EXISTING CURB.

Priscilla S. Cornello, P.E., Director

Designed	MDC/JDB/BGN	12/12
Drawn	MDC/JDB/BGN	12/12
Checked	JDS	12/12
Proj. Engr.	AJH	12/12

No.	Revision Description	Engineer	Date

Registered Professional Engineer (Civil) Certificate No. 40219 ANTHONY J. HERRERA Date Signed 12/27/12 ARIZONA, U.S.A. Expires 12/31/15

epsgroup, Inc. Engineers, Planners & Surveyors 8710 N. Thornydale Rd., Ste. 140, Tucson, Arizona 85742 Phone (520) 408-1400 Fax (520) 408-1403

Arizona Blue Stake 1-800-STAKE-IT 1-800-782-5348 Call Two Working Days Before You Dig

Pima County Department of Transportation

CURB SUMMARY SHEET
MAGEE RD.
LA CAÑADA DR. - ORACLE RD. (SR 77)
PROJECT NO. 4MRLCO

MAGEE RD. IMPROVEMENTS - LA CAÑADA DR. TO ORACLE RD. (SR 77) - PROJECT NO. 4MRLCO

F.H.W.A. REGION	STATE	PROJECT NO.	SHEET NO.	TOTAL SHEETS	AS BUILT
9	ARIZ.	STP-PPM-0(209)D	11	273	
		SS693 01C			

CURB SUMMARY SHEET

LOCATION	Concrete Vertical Curb (L.F.) See Detail RD08, Item #9080001	Single Curb, Type A, H=7" (L.F.) See ADOT Std. C-05.10, Item #9080030	Curb & Gutter, Type D, H=6" (L.F.) See ADOT Std. C-05.10, Item #9080063	6" Concrete Header (L.F.) See Detail RD10, Item #9080402	12" Concrete Header (L.F.) See Detail RD10, Item #9080402	Concrete Wedge Curb (L.F.) See Detail RD09, Item #9080006	Concrete Curb Transition Conc. Vert. Curb to Conc. Wedge Curb (L.F.) See Detail RD13, Item #9080112	Concrete Curb Transition Conc. Vert. Curb to Conc. Curb & Gutter (L.F.) See Detail RD12, Item #9080112	Concrete Curb Transition Conc. Vert. Curb to Curb Terminal to Conc. Header (Each) See Detail RD14, Item #9080090	Curb & Gutter Transition, Type 7 (Each) See ADOT Std. C-05.12, Item #9080107	Concrete Curb Terminal Section (Each) See Detail RD11, Item #9080090	NOTES
MAGEE RD. (SHEET PP06):												
459+00.00, 47.00' Lt. To 460+89.24, 43.00' Lt.	190											
460+89.24, 43.00' Lt. To 461+29.24, 43.00' Lt.						20	20					
461+29.24, 43.00' Lt. To 462+69.67, 68.48' Lt.	150										1	End
462+98.36, 83.33' Lt. To 467+00.00, 43.00' Lt.	428										1	Begin
459+00.00, 43.00' Rt. To 462+30.18, 86.04' Rt.	364											
462+54.87, 86.18' Rt. To 463+83.53, 43.00' Rt.	155											
463+83.53, 43.00' Rt. To 464+23.53, 43.00' Rt.						20	20					
464+23.53, 43.00' Rt. To 467+00.00, 43.00' Rt.	277											
459+00.00, 12.00' Lt. To 462+27.65, 9.00' Lt. (Med. Lt.)	329											
463+01.62, 9.00' Rt. To 467+00.00, 12.00' Lt. (Med. Lt.)	402											
459+00.00, 12.00' Rt. To 462+27.65, 9.00' Lt. (Med. Rt.)	331											
463+01.62, 9.00' Rt. To 467+00.00, 6.00' Lt. (Med. Rt.)	402											
459+00.00, 75.00' Lt. To 459+06.30, 75.00 Lt.				6								
460+13.07, 95.00' Rt. To 460+40.16,95.00, Rt.				27								
TOTALS (SHEET PP06):	**3,028**	**0**	**0**	**33**	**0**	**40**	**40**	**0**	**0**	**0**	**2**	
MAGEE RD. (SHEET PP07):												
467+00.00, 43.00' Lt. To 467+40.60, 77.98' Lt.	61											
468+01.77, 90.02' Lt. To 469+40.62, 55.00' Lt.	159											
469+40.62, 55.00' Lt. To 469+80.62, 55.00' Lt.						20	20					
469+80.62, 55.00' Lt. To 470+12.20, 95.00' Lt.	61											
470+36.66, 95.00' Lt. To 471+00.66, 91.94' Lt.	149											
471+41.61, 91.94' Lt. To 473+02.78, 75.00' Lt.	218											
473+27.31, 75.00' Lt. To 474+04.95, 75.00' Lt.	116											
474+26.26, 75.00' Lt. To 474+95.99, 75.00' Lt.	104											
475+13.85, 75.00' Lt. To 475+68.70, 80.97' Lt.	92											
475+91.45, 80.97' Lt. To 476+00.00, 55.18' Lt.	28											
467+00.00, 43.00' Rt. To 467+53.73, 77.95' Rt.	74											
468+14.58, 77.98' Rt. To 470+02.67, 75.00' Rt.	226											
470+26.76, 75.00' Rt. To 470+67.43, 125.91' Rt.	151											
471+43.96, 87.81' Rt. To 472+96.02, 78.00' Rt.	221											
473+24.02, 78.00' Rt. To 476+00.00, 62.68' Rt.	284											
467+00.00, 12.00' Lt. To 467+26.34, 9.00' Lt. (Med. Lt.)	28											
468+28.38, 9.00' Rt. To 470+95.39, 12.00' Lt. (Med. Lt.)	270											
470+95.39, 12.00' Lt. To 471+61.39, 12.00' Lt. (Med. Lt.)					60				2			Begin & End
471+61.39, 12.00' Lt. To 472+74.02, 9.00' Lt. (Med. Lt.)	114											
473+55.02, 15.00' Rt. To 476+00.00, 18.00' Lt. (Med. Lt.)	250											
467+00.00, 6.00' Lt. To 467+26.34, 9.00' Lt. (Med. Rt.)	28											
468+28.38, 9.00' Rt. To 470+95.39, 3.44' Lt. (Med. Rt.)	270											
470+95.39, 3.44' Lt. To 471+61.39, 6.00' Lt. (Med. Rt.)					60				2			Begin & End
471+61.39, 6.00' Lt. To 472+74.02, 9.00' Lt. (Med. Rt.)	114											
473+55.02, 15.00' Rt. To 476+00.00, 12.00' Lt. (Med. Rt.)	250											
TOTALS (SHEET PP07):	**3,268**	**0**	**0**	**0**	**120**	**20**	**20**	**0**	**4**	**0**	**0**	

LOCATION	Concrete Vertical Curb (L.F.) See Detail RD08, Item #9080001	Single Curb, Type A, H=7" (L.F.) See ADOT Std. C-05.10, Item #9080030	Curb & Gutter, Type D, H=6" (L.F.) See ADOT Std. C-05.10, Item #9080063	6" Concrete Header (L.F.) See Detail RD10, Item #9080402	12" Concrete Header (L.F.) See Detail RD10, Item #9080402	Concrete Wedge Curb (L.F.) See Detail RD09, Item #9080006	Concrete Curb Transition Conc. Vert. Curb to Conc. Wedge Curb (L.F.) See Detail RD13, Item #9080112	Concrete Curb Transition Conc. Vert. Curb to Conc. Curb & Gutter (L.F.) See Detail RD12, Item #9080112	Concrete Curb Transition Conc. Vert. Curb to Curb Terminal to Conc. Header (Each) See Detail RD14, Item #9080090	Curb & Gutter Transition, Type 7 (Each) See ADOT Std. C-05.12, Item #9080107	Concrete Curb Terminal Section (Each) See Detail RD11, Item #9080090	NOTES
MAGEE RD. (SHEET PP08):												
476+00.00, 55.18' Lt. To 476+78.34, 95.00' Lt.	115											
477+02.91, 95.00' Lt. To 478+31.53, 49.00' Lt.	165											
480+69.02, 61.00' Lt. To 483+18.19, 74.48' Lt.	262											
483+47.45, 95.93' Lt. To 485+00.00, 49.00' Lt.	178											
476+00.00, 62.68' Rt. To 476+22.69, 85.98' Rt.	34											
476+75.50, 90.78' Rt. To 477+99.54, 61.00' Rt.	166											
480+33.28, 49.00' Rt. To 481+54.61, 98.54' Rt.	163											
481+85.80, 97.46' Rt. To 484+28.40, 76.87' Rt.	306											
484+55.46, 78.01' Rt. To 485+00.00, 31.00' Rt.	77											
476+00.00, 18.00' Lt. To 478+59.54, 15.00' Lt. (Med. Lt.)	261											
480+09.44, 15.00' Rt. To 482+22.82, 15.00' Rt. (Med. Lt.)	217											
476+00.00, 12.00' Lt. To 478+59.54, 15.00' Lt. (Med. Rt.)	261											
480+09.44, 15.00' Rt. To 482+22.82, 15.00' Rt. (Med. Rt.)	217											
TOTALS (SHEET PP08):	**2,422**	**0**	**0**	**0**	**0**	**0**	**0**	**0**	**0**	**0**	**0**	
MAGEE RD. (SHEET PP09):												
485+00.00, 49.13' Lt. To 485+45.06, 69.35' Lt.	56											
485+70.04, 68.45' Lt. To 486+64.00, 64.46' Lt.	129											
486+88.17, 63.28' Lt. To 488+68.95, 53.60' Lt.	228											
488+94.46, 52.23' Lt. To 489+23.99, 19.00' Lt.	51											
489+23.99, 19.00' Lt. To 489+33.99, 19.00' Lt.								10				
485+00.00, 30.96' Rt. To 486+02.71, 82.96' Rt.	141											
486+31.71, 84.21' Rt. To 489+23.99, 19.00' Rt.	340											
489+23.99, 19.00' Rt. To 489+33.99, 19.00' Rt.								10				
487+42.29, 58.61' Rt. To 487+53.04, 53.78' Lt.				12								
TOTALS (SHEET PP09):	**945**	**0**	**0**	**12**	**0**	**0**	**0**	**20**	**0**	**0**	**0**	
SHEET TOTALS:	**9,663**	**0**	**0**	**45**	**120**	**60**	**60**	**20**	**4**	**0**	**2**	

NOTES:

1. ALL STATIONS AND OFFSETS ARE TO THE EDGE OF PAVEMENT.
2. BEGIN = TREATMENT AT BEGINNING. END = TREATMENT AT END.
3. ALL CURB LENGTHS DO NOT INCLUDE STORM DRAIN INLET LENGTHS AND SIDEWALK SCUPPERS.
4. REFER TO PC/COT STD. DTL. 211 FOR CONCRETE CURB CONNECTIONS TO EXISTING CURB.

Scale: N.T.S. | Sheet RS02 of RS04

FILE NAME: s:\10-077 magee road\civil\cadd\rs\4MRLCO_RS02.dgn DATE: 12/27/12 TIME: 8:44:27 AM aherrera

Priscilla S. Cornello, P.E., Director

No.	Revision Description	Engineer	Date

		Date
Designed	MDC/DB/BGN	12/12
Drawn	MDC/DB/BGN	12/12
Checked	JDS	12/12
Proj. Engr.	AJH	12/12

eps group, Inc.
Engineers, Planners & Surveyors
8710 N. Thornydale Rd., Ste. 145, Tucson, Arizona 85742
Phone (520) 696-0094 Fax (520) 696-0097

Arizona Blue Stake
1-800-STAKE-IT
1-800-782-5348
Call two working days before you dig

Pima County Department of Transportation

CURB SUMMARY SHEET
MAGEE RD.
LA CAÑADA DR. - ORACLE RD. (SR 77)
PROJECT NO. 4MRLCO

MAGEE RD. IMPROVEMENTS - LA CAÑADA DR. TO ORACLE RD. (SR 77) - PROJECT NO. 4MRLCO

F.H.W.A. REGION	STATE	PROJECT NO.	SHEET NO.	TOTAL SHEETS	AS BUILT
9	ARIZ.	STP-PPM-0(209)D	12	273	
		SS693 01C			

CURB SUMMARY SHEET

LOCATION	Concrete Vertical Curb (L.F.) See Detail RD08, Item #9080001	Single Curb, Type A, H=7" (L.F.) See ADOT Std. C-05.10, Item #9080030	Curb & Gutter, Type D, H=6" (L.F.) See ADOT Std. C-05.10, Item #9080063	6" Concrete Header (L.F.) See Detail RD10, Item #9080402	12" Concrete Header (L.F.) See Detail RD10, Item #9080402	Concrete Wedge Curb (L.F.) See Detail RD09, Item #9080006	Concrete Curb Transition Conc. Vert. Curb to Conc. Wedge Curb (L.F.) See Detail RD13, Item #9080112	Concrete Curb Transition Conc. Vert. Curb to Conc. Curb & Gutter (L.F.) See Detail RD12, Item #9080112	Concrete Curb Transition Conc. Vert. Curb to Curb Terminal to Conc. Header (Each) See Detail RD14, Item #9080090	Curb & Gutter Transition, Type 7 (Each) See ADOT Std. C-05.12, Item #9080107	Concrete Curb Terminal Section (Each) See Detail RD11, Item #9080090	NOTES
NORTHERN AVE. (SHEET PP10):												
95+68.58, 21.02' Lt. To 95+91.54, 46.18' Lt.					37							
95+91.54, 46.18' Lt. To 95+90.36, 55.00' Lt.	6								1			Begin
96+14.13, 30.69' Lt. To												
96+14.01, 49.12' Lt. (Dwy. Med. Lt.)	29											
96+14.01, 49.12' Lt. To												
96+14.13, 30.69' Lt. (Dwy. Med. Lt.)	29											
96+39.19, 55.00' Lt. To 96+36.52, 50.51' Lt.	2								1			End
96+36.52, 50.51' Lt. To 96+65.72, 25.69' Lt.					40				1			End
96+65.72, 25.69' Lt. To 99+22.09, 30.00' Lt.	256											
95+45.75, 20.11' Rt. To 95+71.00, 45.00' Rt.					39							
95+97.82, 45.00' Rt. To 96+24.33, 19.39' Rt.					41							
97+82.46, 28.98' Rt. To 98+05.35, 48.50' Rt.					32							
98+28.89, 48.50' Rt. To 98+55.74, 31.00' Rt.					32				1			End
98+55.74, 31.00' Rt. To 99+22.04, 31.00' Rt.	66											
98+73.43, 59.93' Lt. To 98+95.56, 60.43' Lt.				22								
TOTALS (SHEET PP10):	**388**	**0**	**0**	**22**	**221**	**0**	**0**	**0**	**4**	**0**	**0**	

LOCATION	Concrete Vertical Curb (L.F.) See Detail RD08, Item #9080001	Single Curb, Type A, H=7" (L.F.) See ADOT Std. C-05.10, Item #9080030	Curb & Gutter, Type D, H=6" (L.F.) See ADOT Std. C-05.10, Item #9080063	6" Concrete Header (L.F.) See Detail RD10, Item #9080402	12" Concrete Header (L.F.) See Detail RD10, Item #9080402	Concrete Wedge Curb (L.F.) See Detail RD09, Item #9080006	Concrete Curb Transition Conc. Vert. Curb to Conc. Wedge Curb (L.F.) See Detail RD13, Item #9080112	Concrete Curb Transition Conc. Vert. Curb to Conc. Curb & Gutter (L.F.) See Detail RD12, Item #9080112	Concrete Curb Transition Conc. Vert. Curb to Curb Terminal to Conc. Header (Each) See Detail RD14, Item #9080090	Curb & Gutter Transition, Type 7 (Each) See ADOT Std. C-05.12, Item #9080107	Concrete Curb Terminal Section (Each) See Detail RD11, Item #9080090	NOTES
NORTHERN AVE. (SHEET PP11):												
100+78.00, 43.00' Lt. To 103+22.59, 36.21' Lt.	245											
103+22.59, 36.21' Lt. To 104+30.33, 27.72' Lt.					106				1			Begin
105+48.34, 24.87' Lt. To 105+73.93, 49.86' Lt.					40							
106+16.92, 47.66' Lt. To 106+41.33, 22.67' Lt.					39							
100+90.05, 18.00' Rt. To 102+77.07, 18.00' Rt.	187											
102+77.07, 18.00' Rt. To 103+05.06, 42.62' Rt.					39				1			Begin
103+35.36, 75.00' Rt. To												
103+46.36, 75.00' Rt. (Dwy. Med. Rt.)					59							
103+64.07, 42.54' Rt. To 103+88.68, 17.03' Rt.					39							
98+42.04, 74.20' Lt. To 98+55.62, 74.68' Lt.				14								
99+05.25, 74.64' Lt. To 99+13.25, 74.63' Lt.				8								
100+66.55, 66.55' Lt. To 101+00.43, 66.55' Lt.				33								
TOTALS (SHEET PP11):	**432**	**0**	**0**	**55**	**322**	**0**	**0**	**0**	**2**	**0**	**0**	
ORACLE RD. (SHEET PP12):												
411+04.04, 56.00' Lt. To 411+52.34, 119.84' Lt.			83							2		Begin & End
412+66.29, 108.00' Lt. To 413+24.95, 62.00' Lt.			73							2		Begin & End
414+07.15, 96.27' Lt. To 414+35.27, 93.29' Lt.	66											
414+82.64, 140.00' Lt. To 414+65.81, 91.00' Lt.	53											
414+65.81, 91.00' Lt. To 415+13.22, 62.00' Lt.			57							1		Begin
411+47.36, 62.00' Rt. To 412+05.86, 108.00' Rt.			73							2		Begin & End
413+20.47, 123.53' Rt. To 413+73.78, 59.58' Rt.			88							2		Begin & End
411+04.04, 8.00' Lt. To 411+54.46, 6.00' Lt. (Med. Lt.)		52										
413+18.85, 6.00' Rt. To 416+37.66, 8.00' Lt. (Med. Lt.)		321										
407+14.67, 8.00' Rt. To 409+29.67, 4.00' Lt. (Med. Rt.)		216										
411+04.04, 4.00' Lt. To 411+54.46, 6.00' Lt. (Med. Rt.)		52										
413+18.85, 6.00' Rt. To 416+37.66, 4.00' Lt. (Med. Rt.)		321										
TOTALS (SHEET PP12):	**119**	**962**	**374**	**0**	**0**	**0**	**0**	**0**	**0**	**9**	**0**	
SHEET TOTALS:	**939**	**962**	**374**	**77**	**543**	**0**	**0**	**0**	**6**	**9**	**0**	
PROJECT TOTALS:	**25,962**	**962**	**374**	**465**	**780**	**200**	**200**	**40**	**14**	**9**	**18**	

NOTES:

1. STATIONS AND OFFSETS ARE TO THE EDGE OF PAVEMENT, EXCEPT THOSE FOR ADOT CURB, WHICH ARE TO EDGE OF ROADWAY/FACE OF CURB.
2. BEGIN = TREATMENT AT BEGINNING. END = TREATMENT AT END.
3. ALL CURB LENGTHS DO NOT INCLUDE STORM DRAIN INLET LENGTHS AND SIDEWALK SCUPPERS.
4. REFER TO PC/COT STD. DTL. 211 FOR CONCRETE CURB CONNECTIONS TO EXISTING CURB.

Scale: N.T.S. | Sheet RS03 of RS04

FILE NAME: s:\10-077 magee road\civil\cadd\rs\4MRLCO_RS03.dgn DATE: 12/27/12 TIME: 8:44:29 AM aherrera

Priscilla S. Cornelio, P.E., Director

No.	Revision Description	Engineer	Date

		Date
Designed	MDC/JDB/BGN	12/12
Drawn	MDC/JDB/BGN	12/12
Checked	JDS	12/12
Proj. Engr.	AJH	12/12

Anthony J. Herrera, Cert. No. 21718, Expires 12/31/13, Date Signed 12/27/12, Arizona, U.S.A.

eps group, Inc.
Engineers, Planners & Surveyors
9755 N. Thornydale Rd., Ste. 146, Tucson, Arizona 85742
Phone 520.744.9500 Fax 520.744.9505

Arizona Blue Stake
1-800-STAKE-11
1-800-782-5348
Call two working days before you dig

Pima County Department of Transportation

CURB SUMMARY SHEET
MAGEE RD.
LA CAÑADA DR. - ORACLE RD. (SR 77)
PROJECT NO. 4MRLCO

MAGEE RD. IMPROVEMENTS - LA CAÑADA DR. TO ORACLE RD. (SR 77) - PROJECT NO. 4MRLCO

NEW SURVEY MONUMENTS & MARKERS SUMMARY

STATION	OFFSET	SURVEY MONUMENT (EACH)	SURVEY MONUMENT, FRAME AND COVER (EACH)	SURVEY MARKER (EACH)
418+67.23	0.00'	1		
428+02.17	0.00'		1	
432+62.23	0.00'		1	
432+62.31	100.06' Lt.		1	
437+26.95	0.00'	1		
439+14.70	0.00'	1		
441+47.03	0.00'		1	
454+70.33	0.00'		1	
462+96.96	0.00'		1	
467+83.63	0.00'		1	
479+40.54	0.00'			1
Totals		3	7	1

NOTES:

1. See PC/DOT Std. Dtl. 103 for Additional Information.
2. Survey Monument Frame and Cover Shall Be Paid Under Bid Item No. 9090021 - Survey Monument, Frame and Cover.
3. Survey Monument Shall Be Paid Under Bid Item No. 9090002 - Survey Monument.
4. Survey Marker Shall Be Paid Under Bid Item No. 9090522 - Survey Marker, Type B (MAG Dtl. 120-1). See Maricopa Association of Governments Standard Detail No. 120-1 on this page for Survey Marker Information.
5. All Stations and Offsets are Referenced from Magee Rd. Const. Centerline Unless Otherwise Noted.
6. All Survey Monuments are Located Along Right-of-Way Centerline.

IRRIGATION PIPE SLEEVE AND CONTROL WIRE SUMMARY

STATION TO STATION	OFFSET	PIPE SLEEVE DIAMETER (IN.)	PIPE SLEEVE LENGTH (FT.)
Magee Road:			
418+32.00 to 419+02.00	63.00' Lt.	2	70.0
419+81.00	58' Lt. to 8' Lt.	2	50.0
422+00.00 to 422+73.00	65.00' Rt.	4	73.0
422+04.00 to 422+64.00	50.00' Lt.	4	60.0
424+38.00 to 424+98.00	50.00' Lt.	6 & 2	120.0
425+82.00	47' Lt. to 55' Rt.	4	102.0
427+76.00 to 428+26.00	57.00' Lt.	4	50.0
427+84.00 to 428+24.00	57.00' Lt.	4 & 2	80.0
428+45.00 to 428+70.00	57.00' Lt.	6 & 2	50.0
431+31.00 to 431+61.00	57.00' Lt.	6 & 2	60.0
432+37.00 to 432+87.00	53.00' Lt.	4 & 2	100.0
433+57.75 to 434+07.75	60.00' Rt.	4	50.0
435+19.50 to 435+39.50	58.00' Lt.	6 & 2	40.0
436+40.50 to 436+60.50	60.00' Lt.	6 & 2	40.0
437+09.75 to 437+49.75	58.00' Rt.	4	40.0
437+80.00	47' Lt. to 55' Rt.	4	102.0
438+94.75 to 439+34.75	60.00' Lt.	6 & 2	80.0
439+92.50 to 440+12.50	60.00' Rt.	4	20.0
441+44.60 to 441+84.60	62.00' Lt.	4 & 2	80.0
442+03.50 to 442+23.50	57.00' Rt.	4	20.0
443+12.00 to 443+32.00	59.00' Lt.	6 & 2	40.0
444+38.00 to 444+63.00	58.00' Lt.	6 & 2	50.0
445+74.30 to 445+94.30	59.00' Lt.	6 & 2	40.0
446+36.00 to 447+26.00	51.00' Lt.	2-4 & 2	270.0
448+14.00 to 448+39.00	59.00' Lt.	6 & 2	50.0
448+87.00	47' Lt. to 55' Rt.	4	102.0
457+50.00 to 457+70.00	62.00' Lt.	6 & 2	40.0
458+14.00	60' Lt. to 55' Rt.	4	115.0
458+53.00 to 458+75.00	66.00' Lt.	6 & 2	44.0
458+89.30 to 459+09.30	66.00' Lt.	6 & 2	40.0
460+19.00 to 460+41.00	59.00' Rt.	4	22.0
462+63.00 to 463+03.00	64.00' Lt.	4 & 2	80.0
466+30.00	60' Lt. to 55' Rt.	4	115.0
469+96.00 to 470+36.00	65.00' Rt.	6	40.0
470+01.00 to 470+41.00	73.00' Lt.	6	40.0
470+68.00	68' Lt. to 65' Rt.	4	133.0
470+81.00 to 471+31.00	72.00' Rt.	2-4 & 2	150.0
471+08.00 to 471+48.00	68.00' Lt.	2	40.0
472+87.00 to 473+37.00	73.00' Rt.	4 & 2	100.0
474+00.75 to 474+30.75	68.00' Lt.	4	30.0
474+91.00 to 475+21.00	68.00' Lt.	4	30.0
475+60.00 to 476+00.00	68.00' Lt.	4	40.0
476+02.00	67' Lt. to 73' Rt.	4	140.0
476+09.00 to 476+69.00	74.00' Rt.	6 & 2	120.0
481+45.00 to 481+95.00	67.00' Rt.	4	50.0
483+12.00 to 483+62.00	72.50' Lt.	4	50.0
484+18.00 to 484+68.00	70.00' Rt.	4	50.0
485+31.50 to 485+81.50	64.00' Lt.	4	50.0
485+96.75 to 486+36.75	60.00' Rt.	4	40.0
486+47.00	49' Lt. to 41' Rt.	4	90.0
486+50.00 to 487+00.00	53.00' Lt.	4	50.0
Magee Rd. Total			3,538.0

IRRIGATION PIPE SLEEVE AND CONTROL WIRE SUMMARY (Continued)

STATION TO STATION	OFFSET	PIPE SLEEVE DIAMETER (IN.)	PIPE SLEEVE LENGTH (FT.)
Northern Avenue:			
95+85.00 to 96+45.00	38.00 Lt.	4	60.0
97+93.00 to 98+43.00	38.00' Rt.	4	50.0
98+68.00 to 99+03.00	42.00' Lt.	6	35.0
101+38.75 to 101+58.75	60.00' Lt.	6	20.0
101+99.50 to 102+19.50	57.00' Lt.	6	20.0
103+65.50 to 104+00.50	42.00' Lt.	4	35.0
Northern Ave. Total			220.0
Project Total			3,758.0

NOTES:

1. All Pipe Sleeves Shall be Paid Under Bid Item No. 8080001 - Landscape Irrigation System.
2. See Irrigation Sleeving and Trenching Details on Sheet IR18 for Additional Information. Irrigation Sleeves shall be installed by the Roadway Contractor.
3. All Stations and Offsets are Referenced from Magee Road and Northern Avenue Construction Centerline.
4. 2" PVC Conduit are for Irrigation Control Wire. Const. Centerline Unless Otherwise Noted.

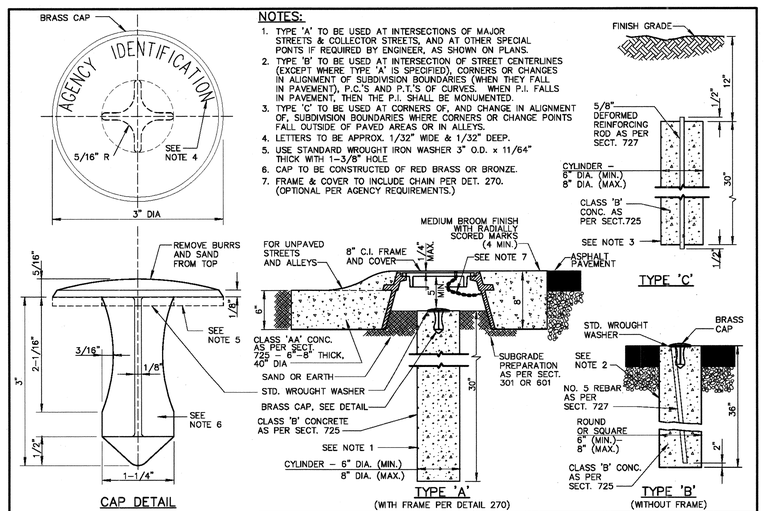

Priscilla S. Cornelio, P.E., Director

No.	Revision Description	Engineer	Date

		Date
Designed	MDC/DB/BGN	12/12
Drawn	MDC/DB/BGN	12/12
Checked	JDS	12/12
Proj. Engr.	AJH	12/12

Arizona Blue Stake 1-800-STAKE-IT 1-800-782-5348

epsgroup, Inc. Engineers, Planners & Surveyors 8115 N. Thornydale Rd., Ste. 145, Tucson, Arizona 85742 Phone (520) 744-9500 Fax (520) 744-9507

Pima County Department of Transportation

NEW SURVEY MONUMENTS & PIPE SLEEVES SUMMARY SHEET
MAGEE RD.
LA CAÑADA DR. - ORACLE RD. (SR 77)
PROJECT NO. 4MRLCO

MAGEE RD. IMPROVEMENTS - LA CAÑADA DR. TO ORACLE RD. (SR 77) - PROJECT NO. 4MRLCO

Scale: | Sheet RS04 of RS04 | Page 13 of 273

F.H.W.A. REGION	STATE	PROJECT NO.	SHEET NO.	TOTAL SHEETS	AS BUILT
9	ARIZ.	STP-PPM-0(209)D	14	273	

SS693 01C

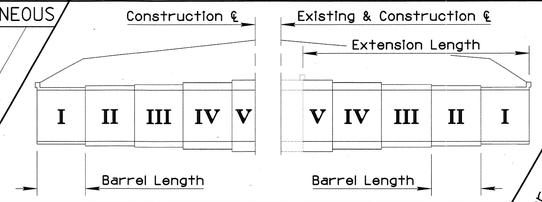

Plan Reference Number ⬡ &	Structure Number	New	Extend	Number of Barrels	Barrel Span (0.0)	Barrel Height (0.0)	Culvert Length (0.0)	Skew (Degree) (0)	B-01.10 Miscellaneous Details	B-01.11 Extension Details	◪ Standard or Detail	▲ Location	Inlet Wings	Outlet Wings	◪ Standard or Detail	Apron	◪ Standard or Detail	Scour/Bank Protection	◪ Standard or Detail	Energy Dissipators	Detail	Linear Feet (0.0) ▲ Left of ℄ I	II	III	IV	V	V	IV	III	II	I ▲ Right of ℄	◑ Reinforcing Steel (0) **	◑ Place Dowels	◑ Class S Concrete ** f'c=3,000 PSI	◑ Remove Str Concrete (0)	◑ Structural Excavation (0)	◑ Structure Back-fill (0)	Berm Embankment (0)	REMARKS
BC1		X		4	10'	5'	154'	13° RT	X		*	Left	X		B-08.10				X	DTL			A										11852		86		736	216		DROP INLET DETAIL DD06
Station: 425+29.69 Magee Road												Right		X	B-04.50				X	DTL	X	X										A	13435		105		396	177		OMIT INLET CUTOFF WALL
Existing:																																Box Culvert Total	25287		191		1132	393		
BC2		X		3	8'	4'	412'	69° RT	X		*	Left	X		B-08.10					DTL			B										31305		189		1351	340		DROP INLET DETAIL DD06
Station: 445+50.69 Magee Road												Right		X	B-08.10	X	DTL		X	DTL												B	31848		198		902	338		OMIT INLET CUTOFF WALL
Existing:																																Box Culvert Total	63153		387		2253	678		
BC3		X		1	10'	5'	1177'	N/A	X		*	Left		X	B-04.50	X	DTL		X	DTL			C																	CBC LOCATED PARALLEL TO
Station: 467+19 Lt. to 478+22 Lt. Magee Road												Right																				C								MAGEE RD.
Existing:																																Box Culvert Total	4293		39		4017	2395		REMOVE EXIST. 2-12'X4' ARCH STR.
BC4		X		1	6'	2'	419'	N/A	X		*	Left		X	B-04.10	X	DTL		X	DTL			N/A																	CBC LOCATED PARALLEL TO
Station: 95+67 Lt. to 99+52 Lt. Northern Avenue												Right																				N/A								NORTHERN AVE.
Existing:																																Box Culvert Total	441		6		707	364		
BC5			X	2	8'	3'	272'	N/A	X	X	B-02.20	Left											N/A																	CBC LOCATED PARALLEL TO
Station: 480+29 Lt. to 483+01 Lt. Magee Road												Right																				N/A								MAGEE RD.
Existing:																																Box Culvert Total	71155	10	401	2	1652	343		TIES INTO JUNCTION STRUCTURE 3
BC6		X		1	5'	3'	441'	N/A	X		*	Left											N/A																	CBC LOCATED PARALLEL TO
Station: 480+36 Rt. to 484+69 Rt. Magee Road												Right	X		B-04.30				X	DTL												N/A								MAGEE RD.
Existing:																																Box Culvert Total	319		5		852	540		OPTION FOR PRECAST HEADWALL
																																Sheet Total	164648	10	1029	2	10643	4713		

NOTE:

A New 4-10'x5'x154' R.C.B.C.
Each cell is 17' Cast-in-place including 3' transition
+ 120' Pre-cast + 17' Cast-in-place including 3' transition
ADOT Std. B-01.10 and B-02.40

B New 3-8'x 4'x 412' R.C.B.C.
Each cell is 80' Cast-in-place including 3' transition
+ 252' Pre-cast + 80' Cast-in-place including 3' transition
ADOT Std. B-01.10 and B-02.30

C New 10'x5'x1177' R.C.B.C.
Cell is 15' Cast-in-place including 3' transition + 1159' Pre-cast
ADOT Std. B-01.10 and B-02.10

ALL CIP REINFORCED CONCRETE BOX CULVERTS ARE PER A.D.O.T. STANDARDS

THE ZEROS IN PARENTHESES (0, 0.0 & 0.00) INDICATE THE DIMENSIONAL PRECISION FOR THAT COLUMN

◑ TOTALS SHOWN FOR THE BOX CULVERT INCLUDE THE QUANTITIES FOR HEADWALLS, WINGS, APRONS, CURBS,

▲ Construction ℄ Looking Ahead

* Precast Box Culvert or Precast Box with Cast-in-Place Ends See Special Provisions

** Quantities are for Cast-in-Place Sections Only

NEW BOX CULVERT SUMMARY SHEET

Scale: N.T.S. | Sheet DS01 of DS08

FILE NAME: S:\10-077 Magee Road\Civil\CADD\DS\4MRLCO_DS01.dgn DATE: 12/27/12 TIME: 5:11:06 PM aherrera

Priscilla S. Cornelio, P.E., Director

Designed	MDC/JDB/BGN	12/12
Drawn	MDC/JDB/BGN	12/12
Checked	JDS	12/12
Proj. Engr.	AJH	12/12

No.	Revision Description	Engineer	Date

epsgroup, inc. Engineers, Planners & Surveyors 8710 N. Thornydale Rd., Ste. 140, Tucson, Arizona 85742 Phone (520) 297-1651 Fax (520) 297-1653

Arizona Blue Stake 1-800-STAKE-IT 1-800-782-5348

Pima County Department of Transportation

DRAINAGE SUMMARY SHEET
MAGEE RD.
LA CAÑADA DR. - ORACLE RD. (SR 77)
PROJECT NO. 4MRLCO

MAGEE RD. IMPROVEMENTS - LA CAÑADA DR. TO ORACLE RD. (SR 77) - PROJECT NO. 4MRLCO

F.H.W.A. REGION	STATE	PROJECT NO.	SHEET NO.	TOTAL SHEETS	AS BUILT
9	ARIZ.	STP-PPM-0(209)D	15	273	

SS693 01C

NEW CATCH BASIN SUMMARY

			CATCH BASIN									SLOTTED DRAIN			INLET PIPE			INLET PIPE			INLET PIPE			OUTLET PIPE				
Catch Basin Number	Station (Magee Rd. ℄)	Offset	Type	Detail	Depth	Wing Length (L)	Grate Type	Control Point Elevation (See Detail DD08)	Diameter	Length (L)	Direction	Elevation	Diameter	Direction	Elevation	Diameter	Direction	Elevation	Diameter	Direction	Elevation	Diameter	Direction	Remarks and Notes	Sheet Number Reference	Catch Basin Number
CB1	418+37	75' LT	4	309	2.0		311(S)	2488.80													2486.80	18	S		SD01	CB1
CB2	418+15	58' LT	3	308	3.0	8		2489.21					18	N							2486.20	24	S		SD01	CB2
CB3	418+15	48' RT	3	308	3.8	8		2489.41				2485.66	24	N							2485.59	24	E		SD01	CB3
CB4	421+50	48' RT		DD05	4.2	16		2487.66				2484.15	24	W	2483.60	24	N				2483.50	36	E		SD01	CB4
CB5	421+50	59' LT	4	309	2.5		311(S)	2487.28													2484.78	24	SE		SD01	CB5
CB6	421+50	43' LT	3	308	3.2	16		2487.75				2484.69	24	NW							2484.59	24	S		SD01	CB6
CB7	423+03	48' RT		DD05	3.7	16		2488.02				2482.88	36	W	2484.31	18	NW				2482.75	36	SE		SD02	CB7
CB8	422+80	40' LT	3	308	2.7	8		2488.04				2485.15	18	NE							2485.05	18	SE		SD01	CB8
CB9	423+58	58' LT	4	309	2.5		311(S)	2488.08													2485.58	18	SW		SD02	CB9
CB10	427+36	43' RT	3	308	2.7	16		2488.02													2485.35	24	N		SD02	CB10
CB11	427+39	43' LT	3	308	2.7	16		2488.02													2485.35	18	S		SD02	CB11
CB12	428+60	43' RT		DD05	2.7	16		2488.58				2486.00	18	E							2485.91	18	N		SD02	CB12
CB13	429+05	43' LT	3	308	2.7	8		2489.14													2486.47	18	S		SD02	CB13
CB14	431+59	43' RT		DD05	2.9	8		2495.01				2492.34	18	NE							2492.10	18	W		SD02	CB14
CB15	433+12	43' LT	4	309	2.7		311(D)	2498.48													2495.81	18	SW		SD03	CB15
CB16	434+45	43' RT	3	308	2.7	16		2501.66													2498.99	18	SE		SD03	CB16
CB17	437+76	43' LT	3	308	2.6	16		2504.71													2502.07	18	S		SD03	CB17
CB18	437+76	43' RT	3	308	2.6	12		2504.71													2502.07	18	N		SD03	CB18
CB19	439+64	43' LT	3	308	2.5	8		2506.03													2503.53	18	SW		SD03	CB19
CB20	439+48	43' RT	3	308	2.5	8		2505.82													2503.32	18	N		SD03	CB20
CB21	442+15	43' LT	3	308	2.7	16		2510.04													2507.37	18	SE		SD04	CB21
CB22	442+27	43' RT		DD05	3.2	16		2510.23				2507.02	18	NW							2506.99	18	SE		SD04	CB22
CB23	446+12	43' RT	3	308	2.7	16		2516.55													2513.90	18	N		SD04	CB23
CB24	447+19	43' LT	3	308	2.7	8		2518.36													2515.69	18	S		SD04	CB24
CB25	450+50	43' RT	3	308	2.7	16		2524.43													2521.76	18	N		SD05	CB25
CB26	450+86	43' LT	3	308	2.7	8		2525.17													2522.50	18	SW		SD05	CB26
CB27	455+35	43' RT	3	308	2.7	16		2535.30													2532.63	18	N		SD05	CB27

NEW CATCH BASIN SUMMARY SHEET

Priscilla S. Cornelio, P.E., Director

Designed	MDC/JDB/BGN	12/12
Drawn	MDC/JDB/BGN	12/12
Checked	JDS	12/12
Proj. Engr.	AJH	12/12

No.	Revision Description	Engineer	Date

Pima County Department of Transportation

DRAINAGE SUMMARY SHEET

MAGEE RD.
LA CAÑADA DR. - ORACLE RD. (SR 77)
PROJECT NO. 4MRLCO

Arizona Blue Stake, Inc.
1-800-STAKE-IT
(Call two working days before you dig)

epsgroup, inc.
Engineers, Planners & Surveyors
4801 E. Broadway Blvd., Ste. 140, Tucson, Arizona 85712
Phone: (520) 408-1448 Fax: (520) 408-1483

MAGEE RD. IMPROVEMENTS - LA CAÑADA DR. TO ORACLE RD. (SR 77) - PROJECT NO. 4MRLCO

Scale:	N.T.S.	Sheet DS02 of DS08	Page 15 of 273

FILE NAME: s:\10-077 magee road\civil\cadd\ds\4MRLCO_DS02.dgn DATE: 12/27/12 TIME: 5:11:28 PM aherrera

F.H.W.A. REGION	STATE	PROJECT NO.	SHEET NO.	TOTAL SHEETS	AS BUILT
9	ARIZ.	STP-PPM-0(209)D	16	273	

SS693 01C

NEW CATCH BASIN SUMMARY

	CATCH BASIN											SLOTTED DRAIN			INLET PIPE			INLET PIPE			INLET PIPE			OUTLET PIPE				
Catch Basin Number	Station (Magee Rd. ℄)	Offset	Type	Detail	Depth	Wing Length (L)	Grate Type	Control Point Elevation (See Detail DD08)	Diameter	Length	Direction	Elevation	Diameter	Direction	Elevation	Diameter	Direction	Elevation	Diameter	Direction	Elevation	Diameter	Direction	Remarks and Notes	Sheet Number Reference	Catch Basin Number
CB28	455+57	43' LT	3	308	2.7	16		2535.83													2533.17	18	SW		SD05	CB28
CB29	459+45	43' LT	3	308	2.3	12		2545.00													2542.50	18	S		SD06	CB29
CB30	459+45	43' RT	3	308	3.1	12		2545.00				2542.07	18	N							2541.95	18	S		SD06	CB30
CB31	462+91	43' RT	3	308	3.3	12		2552.41				2549.53	18	NE							2549.08	18	W		SD06	CB31
CB32	463+29	43' LT	3	308	2.7	12		2553.14													2550.48	18	SW		SD06	CB32
CB33	468+58	43' RT		DD10	4.0	16		2563.31				2559.70	18	NE	2559.42	36	E				2559.26	BC4	SW		SD07	CB33
CB34	468+73	55' LT	3	308	2.7	8		2563.36													2560.70	18	SW		SD07	CB34
CB35	471+48	57' RT		DD05	4.2	12		2568.76				2564.81	36	E							2564.54	36	W		SD07	CB35
CB36	473+50	61' RT		DD05	3.7	16		2572.86				2570.09	18	W							2569.14	18	E		SD07	CB36
CB37	476+49	78' LT	4	309	2.7		311(S)	2580.00													2577.29	18	S		SD08	CB37
CB38	476+78	74' LT	4	309	2.7		311(S)	2582.00													2579.29	18	S		SD08	CB38
CB39	476+85	61' RT		DD05	3.5	16		2583.79				2481.23	18	SE							2580.28	18	W		SD08	CB39
CB40	480+41	49' RT	3	308	2.7	24		2593.00													2590.25	18	S		SD08	CB40
CB41	480+80	61' LT	3	308	4.2	24		2594.00													2589.80	18	S		SD08	CB41
CB42	481+58	94' RT	4	309	2.5		311(S)	2593.54													2591.04	18	N		SD08	CB42
CB43	482+04	72' RT	4	309	2.5		311(S)	2594.50													2591.88	18	N		SD08	CB43
CB44	482+10	49' RT	3	308	3.6	16		2597.36													2593.63	18	S		SD08	CB44
CB45	483+74	59' LT	4	309	2.8		311(D)	2601.95													2599.18	18	W		SD08	CB45
CB46	484+85	32' RT	3	308	2.7	8		2606.03													2603.37	18	S		SD08	CB46
CB47	486+65	24' RT	3	308	2.5	16		2612.07													2609.56	18	S		SD09	CB47
CB48	487+13	28' LT	3	308	2.7	16		2613.58													2610.78	18	NW		SD09	CB48
CB49	96+69*	26' LT	4	309	3.0		311(D)	2559.42													2556.46	18	N		SD10	CB49
CB50	98+56*	31' RT	4	309	3.0		311(D)	2561.22													2558.27	18	N		SD10	CB50
CB51	102+49*	42' LT	3	308	2.7	8		2560.45													2557.78	18	NE		SD11	CB51
CB52	102+49*	18' RT	3	308	2.7	8		2560.93													2558.37	18	SW		SD11	CB52
CB53	480+14	116' LT	1	C-15.10	2.9		C-15.50(D)	2592.90													2590.00	18	S		SD08	CB53

* - NORTHERN AVE. ℄

NEW CATCH BASIN SUMMARY SHEET

Priscilla S. Cornelio, P.E., Director

Designed	MDC/JDB/BGN	12/12
Drawn	MDC/JDB/BGN	12/12
Checked	JDS	12/12
Proj. Engr.	AJH	12/12

No.	Revision Description	Engineer	Date

eps group, inc.
Engineers, Planners & Surveyors
8520 N. Silverbell Rd., Ste. 145, Tucson, Arizona 85743
Phone: 520-297-8454 Fax: 520-297-8455

Arizona Blue Stake
1-800-STAKE-IT
1-800-782-5348
Call the Working Days before You Dig

Pima County Department of Transportation

DRAINAGE SUMMARY SHEET

MAGEE RD.
LA CAÑADA DR. - ORACLE RD. (SR 77)
PROJECT NO. 4MRLCO

MAGEE RD. IMPROVEMENTS - LA CAÑADA DR. TO ORACLE RD. (SR 77) - PROJECT NO. 4MRLCO

Scale:	N.T.S.	Sheet DS03 of DS08	Page 16 of 273

FILE NAME: s:\10-077 magee road\civil\cadd\ds\4MRLCO_DS03.dgn DATE: 12/27/12 TIME: 5:11:30 PM aherrera

F.H.W.A. REGION	STATE	PROJECT NO.	SHEET NO.	TOTAL SHEETS	AS BUILT
9	ARIZ.	STP-PPM-0(209)D	17	273	

SS693 01C

NEW DRAIN SUMMARY

	DRAIN								GRATE			INLET PIPE			INLET PIPE			INLET PIPE			OUTLET PIPE			
Drain Number	Station	Offset	Type	Detail	Depth	Length	Type	Elevation	Elevation	Diameter	Direction	Elevation	Diameter	Direction	Elevation	Diameter	Direction	Elevation	Diameter	Direction	Remarks and Notes	Sheet Number Reference	Drain Number
TD1	471+06	57' RT		DD07	4.2	50.3	DD07	2568.03	2564.27	36	E							2563.39	36	W	TRANSVERSE DRAIN	SD07	TD1
TD2	473+10	60' RT		DD07	4.3	44.8'	DD07	2572.02	2568.87	18	E	2568.41	18	S				2567.09	36	W	TRANSVERSE DRAIN	SD07	TD2
TD3	471+28	73' LT		DD12	2.7	25'	DD12	2568.10										2565.42	18	S	TRENCH DRAIN	SD07	TD3
SD1	474+04	61' LT		C-13.60	N/A	22'	DD13	2574.26										2572.13	18	S	SLOTTED DRAIN	SD07	SD2
SD2	474+96	73' LT		C-13.60	N/A	18'	DD13	2476.69										2574.58	18	S	SLOTTED DRAIN	SD07	SD2
SD3	475+80	74' LT		C-13.60	N/A	22'	DD13	2579.18										2577.08	18	S	SLOTTED DRAIN	SD07	SD3

NEW TRANSVERSE/TRENCH/SLOTTED DRAIN SUMMARY SHEET

Priscilla S. Cornelio, P.E., Director

Designed	MDC/JDB/RGN	12/12
Drawn	MDC/JDB/RGN	12/12
Checked	JDS	12/12
Proj. Engr.	AJH	12/12

No.	Revision Description	Engineer	Date

Arizona Blue Stake
1-800-STAKE-IT
1-800-782-5348
Call the locating non-profits this 7DS

eps group, Inc.
Engineers, Planners & Surveyors
Phone (520) 408-1440 Ste. 140 Tucson, Arizona 85742
Fax (520) 408-1483

Pima County Department of Transportation

DRAINAGE SUMMARY SHEET

MAGEE RD.
LA CAÑADA DR. - ORACLE RD. (SR 77)
PROJECT NO. 4MRLCO

MAGEE RD. IMPROVEMENTS - LA CAÑADA DR. TO ORACLE RD. (SR 77) - PROJECT NO. 4MRLCO

Scale:	N.T.S.	Sheet DS04 of DS05	Page 17 of 273

FILE NAME: s:\10-077 magee road\civil\cadd\ds\4MRLCO_DS04.dgn DATE: 12/27/12 TIME: 5:11:31 PM aherrera

F.H.W.A. REGION	STATE	PROJECT NO.	SHEET NO.	TOTAL SHEETS	AS BUILT
9	ARIZ.	STP-PPM-0(209)D	18	273	
		SS693 01C			

NEW STORM DRAIN MANHOLE & JUNCTION STRUCTURE SUMMARY

			MANHOLE BASE & RISER				FRAME & COVER	INLET PIPE			INLET PIPE			INLET PIPE			INLET PIPE			OUTLET PIPE			
Storm Drain MH/JS Number	Station (Magee Rd. ℄)	Offset	Depth (Rim Outfall Invert)	Manhole Base Detail	Detail	Detail	Rim Grate Elevation	Elevation	Diameter	Direction	Elevation	Diameter	Direction	Elevation	Diameter	Direction	Elevation	Diameter	Direction	Remarks and Notes	Sheet Number Reference	Storm Drain MH/JS Number
MH1	427+35	9' LT	4.9	300	302	304	2489.32	2484.55	24	SE	2485.05	18	N	2485.05	18	S	2484.45	24	W		SD02	MH1
MH2	428+60	9' RT	4.7	300	302	304	2489.87	2485.75	18	S	2485.75	18	NE				2485.15	24	NW		SD02	MH2
MH3	437+76	8' LT	4.4	300	302	304	2505.83	2501.49	18	E	2501.58	18	N	2501.58	18	S	2501.39	18	W		SD03	MH3
MH4	439+48	8' LT	4.6	300	302	304	2507.15	2502.90	18	NE	2502.90	18	S				2502.55	18	W		SD03	MH4
MH5	446+12	9' RT	4.8	300	302	304	2517.63	2512.90	18	E	2512.90	18	S				2512.80	18	W		SD04	MH5
MH6	447+19	9' RT	4.4	300	302	304	2519.48	2515.18	18	E	2515.18	18	N				2515.08	18	W		SD04	MH6
MH7	450+50	9' RT	4.2	300	302	304	2525.51	2521.43	18	E	2521.43	18	NE	2521.43	18	S	2521.33	18	W		SD05	MH7
MH8	455+35	9' RT	4.5	300	302	304	2536.60	2532.22	18	NE	2532.22	18	S				2532.12	18	W		SD05	MH8
MH9	473+25	81.5' RT	3.7	300	302	304	2572.30	2568.68	18	SE							2568.58	24	N	DETAIL DD07	SD07	MH9
MH10	97+81*	37' LT			302	304	2560.65													CBC RISER	SD10	MH10
JS1	478+41	51' LT				304	2590.90	2584.16	EX. BC	E	2582.50	2-42	SE				2580.87	BC3	W	DETAIL DD02	DP06	JS1
JS2	480+23	55' RT				304	2594.10	2587.63	CBC	E							2587.30	2-42	NW	DETAIL DD03	SD08	JS2
JS3	483+05	50' LT				304	2600.54	2596.53	18	E	2591.34	72	E				2591.24	BC5	W	DETAIL DD04	DP06	JS3

* - NORTHERN AVE. ℄

NEW MANHOLE SUMMARY SHEET

Priscilla S. Cornelio, P.E., Director

No.	Revision Description	Engineer	Date

		Date
Designed	MDC/JDS/RGN	12/12
Drawn	MDC/JDS/RGN	12/12
Checked	JDS	12/12
Proj. Engr.	AJH	12/12

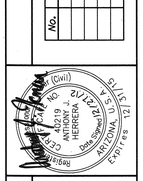

epsgroup, Inc.
Engineers, Planners & Surveyors
2737 N. Thornydale Rd., Ste. 140, Tucson, Arizona 85742
Phone: 520-744-9553 Fax: 520-744-9553

Arizona Blue Stake
1-800-STAKE-IT
1-800-782-5348
Call two working days before you dig

Pima County Department of Transportation

DRAINAGE SUMMARY SHEET

MAGEE RD.
LA CAÑADA DR. - ORACLE RD. (SR 77)
PROJECT NO. 4MRLCO

MAGEE RD. IMPROVEMENTS - LA CAÑADA DR. TO ORACLE RD. (SR 77) - PROJECT NO. 4MRLCO

Scale:	N.T.S.	Sheet DS05 of DS08	Page 18 of 273

FILE NAME: s:\10-077 magee road\civil\cadd\ds\4MRLCO_DS05.dgn DATE: 12/27/12 TIME: 5:11:33 PM aherrera

NOTE:
THE ZEROS IN PARENTHESES (0, 0.0 & 0.000) INDICATE THE DIMENSIONAL PRECISION FOR THAT COLUMN

NOTE:
PIPE OPTIONS SELECTED ARE THOSE REQUIRED TO MEET MINIMUM SERVICE LIFE.
SHADED PIPE OPTION FIELDS ARE NOT ALLOWABLE ALTERNATIVES.

CSP - CORRUGATED STEEL PIPE
CAP - CORRUGATED ALUMINUM PIPE
RCP - REINFORCED CONCRETE PIPE
NRCP - NON-REINFORCED CONCRETE PIPE
NRCIPCP - NON-REINFORCED CAST-IN-PLACE CONCRETE PIPE
CHDPEPP - CORRUGATED HIGH-DENSITY POLYETHYLENE PLASTIC PIPE

F.H.W.A. REGION	STATE	PROJECT NO.	SHEET NO.	TOTAL SHEETS	AS BUILT
9	ARIZ.	STP-PPM-0(209)D	19	273	
		SS693 01C			

Station (MAGEE RD ℄)	DESCRIPTION: Plan Reference Number	Controlling Fill Height Range	Size, Corrugated (In.)	Size, Smooth (In.)	Length (0) (Ft.)	Skew (0) (Degree)	CSP: Corrugation	Wall Thickness (0.000) (In.)	Zinc Coating	Bituminous Coated Zinc	Aluminum Coating	Bituminous Coated Aluminum	CAP: Corrugation	Wall Thickness (0.000) (In.)	Uncoated	Bituminous Coated	RCP: Class - Non-Trench	Class - Trench	Minimum Wall Thickness (0) (In.)	AASHTO M-294 Type C	AASHTO M-294 Type S	NRCP	NRCIPCP	CHDPEPP	END TREATMENT: C-13.20 & C-13.25	Detail	Size, (In) Manhole	Standard or Detail	S-Single / D-Double	Location	H (0.0)	L Wing (0.0)	L 18" Slotted Drain (0)	L 24" Slotted Drain (0)	Grate Type	Control Point Elevation (0.00)	Catch Basin Depth (Ft.)	Apron Depression DD08 L (0.0) (Ft.)	QUANTITIES: Pipe Excavation (0) (Cubic Yard)	Pipe Back-fill (0) C-13.15	Drainage Excavation (0)	Berm/Dike Embankment (0)	REMARKS
418+15 to 418+37	1	2		18	24												II										309	S							311	2488.80			9	5			CB1 to CB2
418+15 to 418+15	2	2		24	107												II										308					8				2489.21	2.5	12	78	25			CB2 to CB3
418+15 to 421+50	3	2		24	316												II															8				2489.41	2.5	12	164	75			CB3 to CB4
421+50 to 421+50	4	2		24	92												II										DD05					16				2487.76	2.5	20	55	22			CB6 tO CB4
421+50 to 421+50	5	2		24	12												II										309	S							311	2487.28			6	3			CB5 to CB6
421+50 to 423+02	6	3		36	134												II																			2487.66			87	44			CB4 to CB7
422+80 to 423+02	7	3		18	95												III										308					8				2488.04	2.5	12	30	18			CB8 to CB7
423+58 to 422+80	8	2		18	69												II										309	S				8			311	2488.08			25	16			CB9 to CB8
423+02 to 424+86	9	4		36	185												III										DD05					16				2488.02	2.5	20	123	61			CB7 to WINGWALL
427+35 TO 425+54	10	3		24	180												III										300									2489.32			35	43			MH1 to BC1
427+36 to 427+35	11	2		24	51												II						48				308					16				2488.02	2.5	20	17	12			CB10 to MH1
427+40 to 427+35	12	2		18	33												II										308					16				2488.02	2.5	20	6	6			CB11 to MH1
428+60 to 427+35	13	2		24	123												II										300									2489.87			66	29			MH2 to MH1
428+60 to 428+60	14	2		18	33												II						48				DD05					16				2488.58	2.5	20	23	6			CB12 to MH2
431+59 to 428+60	15	2		18	288												II										DD05					16				2495.01	2.5	20	199	56			CB14 to CB12
429+05 to 428+60	16	2		18	68												II										308					8				2489.14	2.5	12	18	13			MH2 to CB13
433+12 to 431+59	17	2		18	161												II										309	D							311	2498.48			92	31			CB15 to CB14
434+45 to 435+20	18	2		18	93												II								1							16				2501.66	2.5	20	29	18			CB16 to OUTLET
437+76 to 436+85	19	3		18	90												III						48				300									2505.83			18	17			MH3 to RCP1
437+76 to 437+76	20	2		18	34												II										308					16				2504.71	2.5	20	7	7			CB17 to MH3
437+76 to 437+76	21	2		18	50												II										308					12				2504.71	2.5	16	13	10			CB18 TO MH3
439+48 to 437+76	22	2		18	169												II						48				300									2507.15			77	33			MH4 to MH3
439+48 to 439+48	23	2		18	50												II										308					8				2505.82	2.5	12	30	10			CB20 to MH4
439+64 to 439+48	24	2		18	37												II										308					8				2506.03	2.5	12	15	7			CB19 to MH4
442+15 to 442+27	25	2		18	88												II										308					16				2510.04	2.5	20	48	17			CB21 to CB22
442+27 to 442+93	26	2		18	66												II								1		DD05					8				2510.23	2.5	12	13	13			CB22 to OUTLET
446+12 to 445+63	27	3		18	48												III						48				300									2517.63			6	9			MH5 to BC2
Sheet Total																									2															1289	606			

FILL HEIGHT RANGE TABLE (Ft.)

RANGE NO.		1	2	3	4	5	6	7	8	9	10	11	12
FILL	>	1	3	5	8	11	15	20	25	30	40	55	70
HEIGHT (Ft.)	≤	3	5	8	11	15	20	25	30	40	55	70	90

◒ SHOULD FIELD CONDITIONS VARY FROM THE RANGE INDICATED, CONTACT DESIGN FOR RE-EVALUATION OF PIPE DESIGN REQUIREMENTS.

◪ PIPE CORRUGATION

A	2⅔x½	D	6x2
B	3x1	E	3x1 or 9x2½
C	9x2½		

NEW PIPE SUMMARY SHEET

FILE NAME: s:\10-077 magee road\civil\cadd\ds\4MRLCO_DS06.dgn DATE: 12/27/12 TIME: 5:11:35 PM aherrera

Scale: N.T.S. Sheet DS06 of DS08

Priscilla S. Cornelio, P.E., Director

No.	Revision Description	Engineer	Date

		Date
Designed	MDC/JDB/RGN	12/12
Drawn	MDC/JDB/RGN	12/12
Checked	JDS	12/12
Proj. Engr.	AJH	12/12

epsgroup, Inc.
Engineers, Planners & Surveyors
8119 N. Thornydale Rd., Ste. 140, Tucson, Arizona 85742
Phone (520) 744-9537 Fax (520) 744-9539

Arizona Blue Stake 1-800-STAKE-IT 1-800-782-5348

Pima County Department of Transportation

DRAINAGE SUMMARY SHEET
MAGEE RD.
LA CAÑADA DR. - ORACLE RD. (SR 77)
PROJECT NO. 4MRLCO

Page 19 of 273

MAGEE RD. IMPROVEMENTS - LA CAÑADA DR. TO ORACLE RD. (SR 77) - PROJECT NO. 4MRLCO