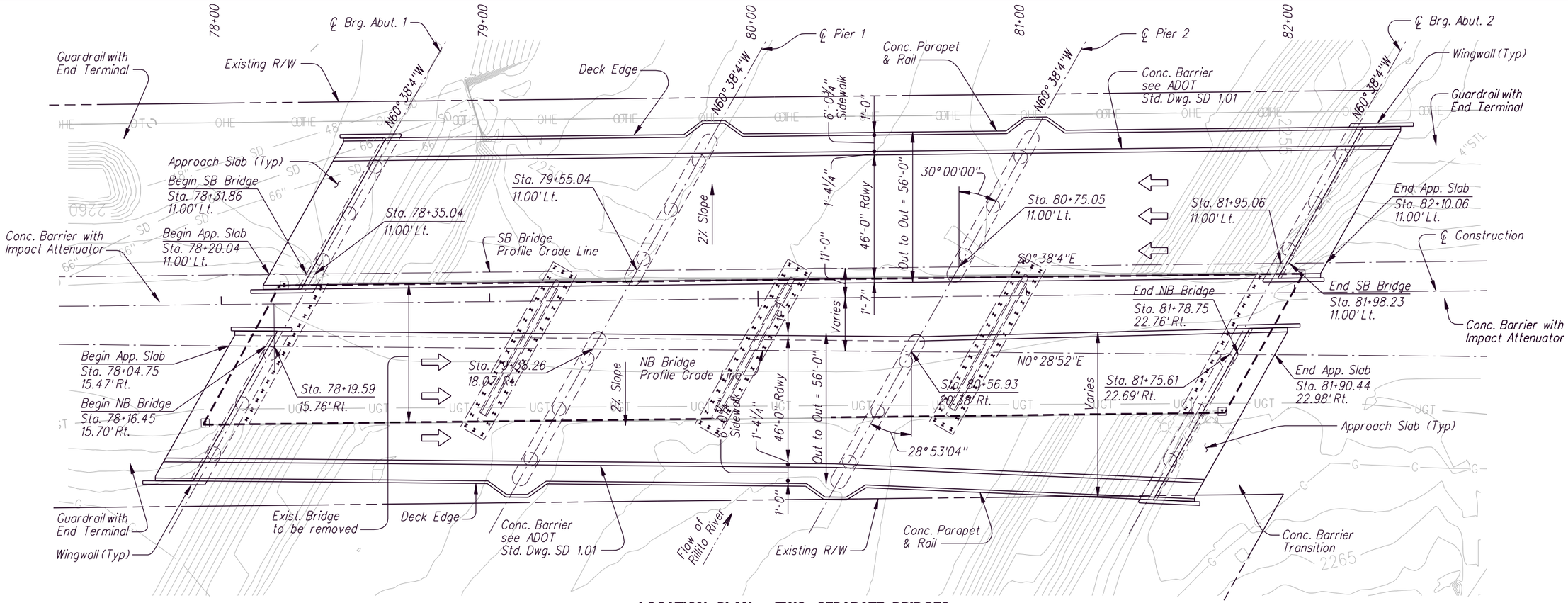

LOCATION PLAN – TWO SEPARATE BRIDGES

Scale 1" = 20'-0"
Two New Three Span Precast Prestressed AASHTO Type V Girder Bridges
SB Skew = 30° 00'00" w/ respect to SB BPGL
NB Skew = 28° 53'04" w/ respect to NB BPGL
Contour Interval = 1'-0"

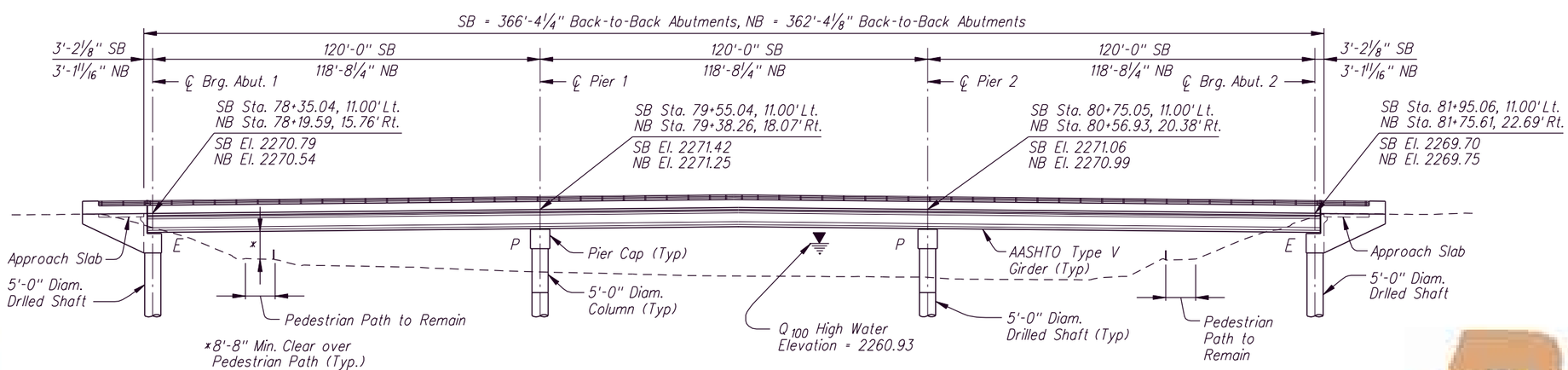

BRIDGE ELEVATION (SB BRIDGE SHOWN, NB BRIDGE SIMILAR)

Scale 1" = 20'-0"
Stations are along the La Cholla Boulevard Construction Centerline.
Dimensions and Elevations are along the SB or NB Bridge Profile Grade Line at top of Deck unless noted otherwise.