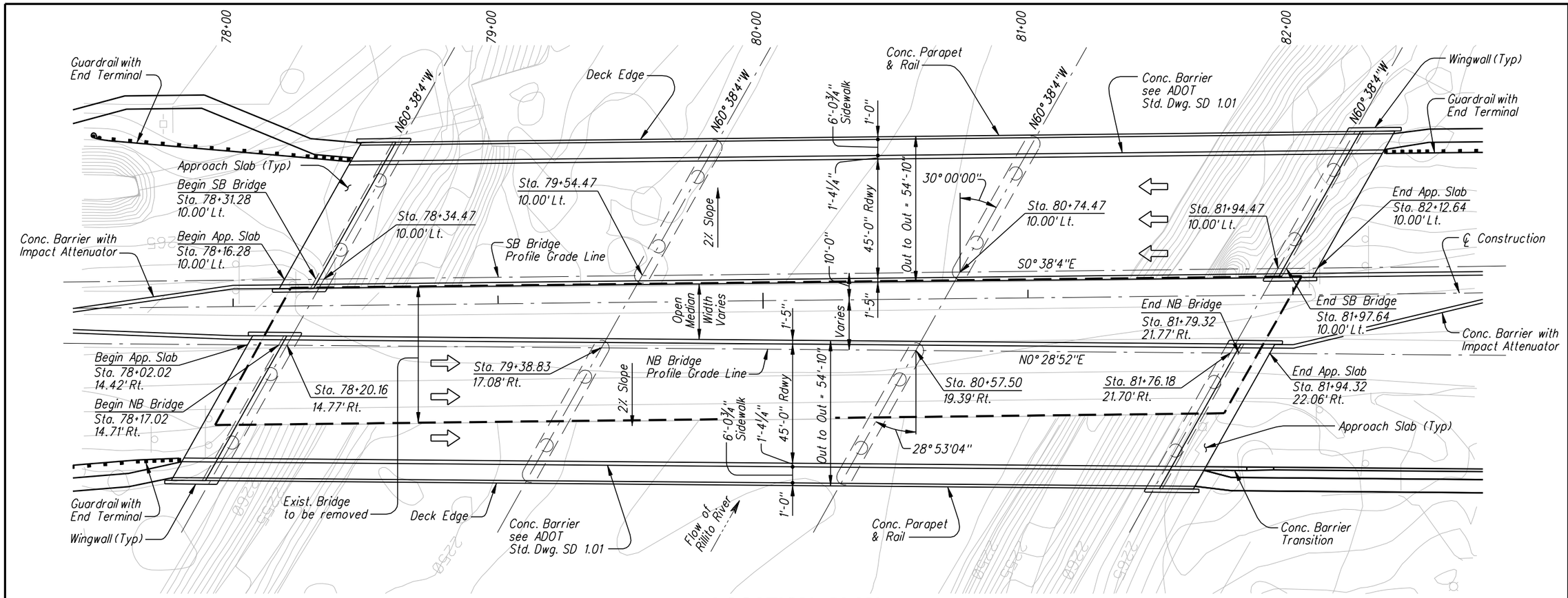

LOCATION PLAN

Scale 1" = 20'-0"
Two New Three Span Precast Prestressed AASHTO Type V Mod. Girder Bridges
SB Skew = 30° 00'00" w/ respect to SB BPGL
NB Skew = 28° 53'04" w/ respect to NB BPGL
Contour Interval = 1'-0"

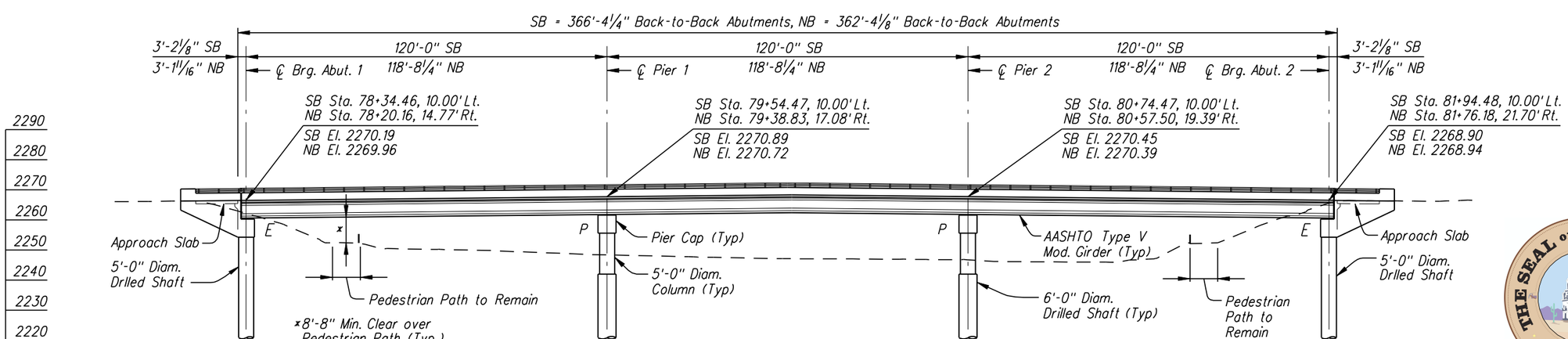

BRIDGE ELEVATION (LOOKING WEST)

Scale 1" = 20'-0"
Stations are along the La Cholla Boulevard Construction Centerline.
Dimensions and Elevations are along the SB or NB Bridge Profile Grade Line at top of Deck unless noted otherwise.

PROPOSED BRIDGE

Regional Transportation Authority

Date: 3/4/2008

File: C:\PWworking\PHX\emcgehee\dms57683\20S-PE-44_F6.dgn

No.	Revision Description	Engineer	Date

		Date
Designed	MJD/ERM	03/08
Drawn	TRK	03/08
Checked	TWB	03/08
Proj. Engr.	TWB	03/08

Priscilla S. Cornelio, P.E. Director

PRELIMINARY - NOT FOR CONSTRUCTION

HDR Engineering, Inc.
5670 E. Broadway Circle, Suite 530
Tucson, AZ 85711-4459
(520) 584-3600

LOCATION PLAN & ELEVATION
LA CHOLLA BOULEVARD BRIDGE
RUTHRAUFF RD. TO RIVER RD.
W.O. 4LCITR

Pima County Department of Transportation

Scales	Horiz. 1"=	Sheet	of	Page	of
	Vert. N/A				