SUNSET ROAD

SILVERBELL ROAD TO INTERSTATE 10

PIMA COUNTY
TRANSPORTATION

GENERAL DESCRIPTION OF PROJECT

CONSTRUCTION OF 0.64 MILES OF NEW ROADWAY INCLUDING BRIDGE OVER SANTA CRUZ RIVER, A NEW TRAFFIC SIGNALIZED INTERSECTION AT SILVERBELL AND SUNSET, A SHARED USE PATH ON THE SOUTH SIDE OF THE ROADWAY AND AN ASPHALTIC CONCRETE SIDEWALK ON THE NORTH SIDE OF THE ROADWAY.

PROJECT NUMBER
4RTSUN

PIMA COUNTY BOARD OF SUPERVISORS

SHARON BRONSON, CHAIR, DISTRICT 3

ALLY MILLER, DISTRICT 1 RAY CARROLL, DISTRICT 4

RAMON VALADEZ, DISTRICT 2 RICHARD ELIAS, DISTRICT 5

THIS PROJECT IS LOCATED WITHIN SUPERVISOR DISTRICT 1

SHEET INDEX

PAGE NO.	SHT TYPE	DESCRIPTION
1	CS01	COVER SHEET
2	GN01	GENERAL NOTES SHEET
3	GN02	EARTHWORK NOTES SHEET
4	TYP01	PAVEMENT STRUCTURAL SECTIONS SHEET
5-6	TYP02-TYP03	TYPICAL SECTIONS SHEETS
7	SB01	BARRIER SUMMARY SHEET
8	SB02	PIPE & CATCH BASIN SUMMARY SHEET
9-23	RD01-RD15	DETAILS SHEETS
24	HC01	HORIZONTAL CONTROL SHEET
25-27	EN01-EN03	PRESERVATION FENCING SHEETS
28-39	PP01-PP12	ROADWAY PLAN & PROFILE SHEETS
40-41	ST01-ST02	GEOMETRIC DATA & STAKING SHEETS
42-44	SD01-SD03	STORM DRAIN PLAN & PROFILE SHEETS
45-50	CD01-CD06	CROSS DRAINAGE PLAN & PROFILE SHEETS
51-59	PM01-PM09	PAVEMENT MARKING/SIGNING SHEETS
60-63	TS01-TS04	TRAFFIC SIGNAL SHEETS
64-65	IT01-IT02	ITS SYSTEM SHEETS
66-69	RW01-RW04	RETAINING WALL SHEETS
70-112	S01-S43	SANTA CRUZ RIVER BRIDGE SHEETS
113-120	SF01-SF08	FOUNDATION DATA SHEETS
121-133	SD1.01-SD7.01	ADOT STRUCTURE DETAIL DRAWINGS
134-146	EC01-ECD07	EROSION CONTROL SHEETS
147-172	LS01-LD02	PLANTING SHEETS
173-191	IRS01-IRD05	IRRIGATION SHEETS
192	WE01	ELECTRICAL FOR IRRIGATION
193-196	W1-W4	WATER MODIFICATION SHEETS
197-203	~~TEP1-TEP7~~	~~TEP UNDERGROUND DISTRIBUTION SYSTEM~~ N.I.C. 1
NOT IN CONTRACT		RIGHT-OF-WAY PLANS
		CROSS SECTIONS

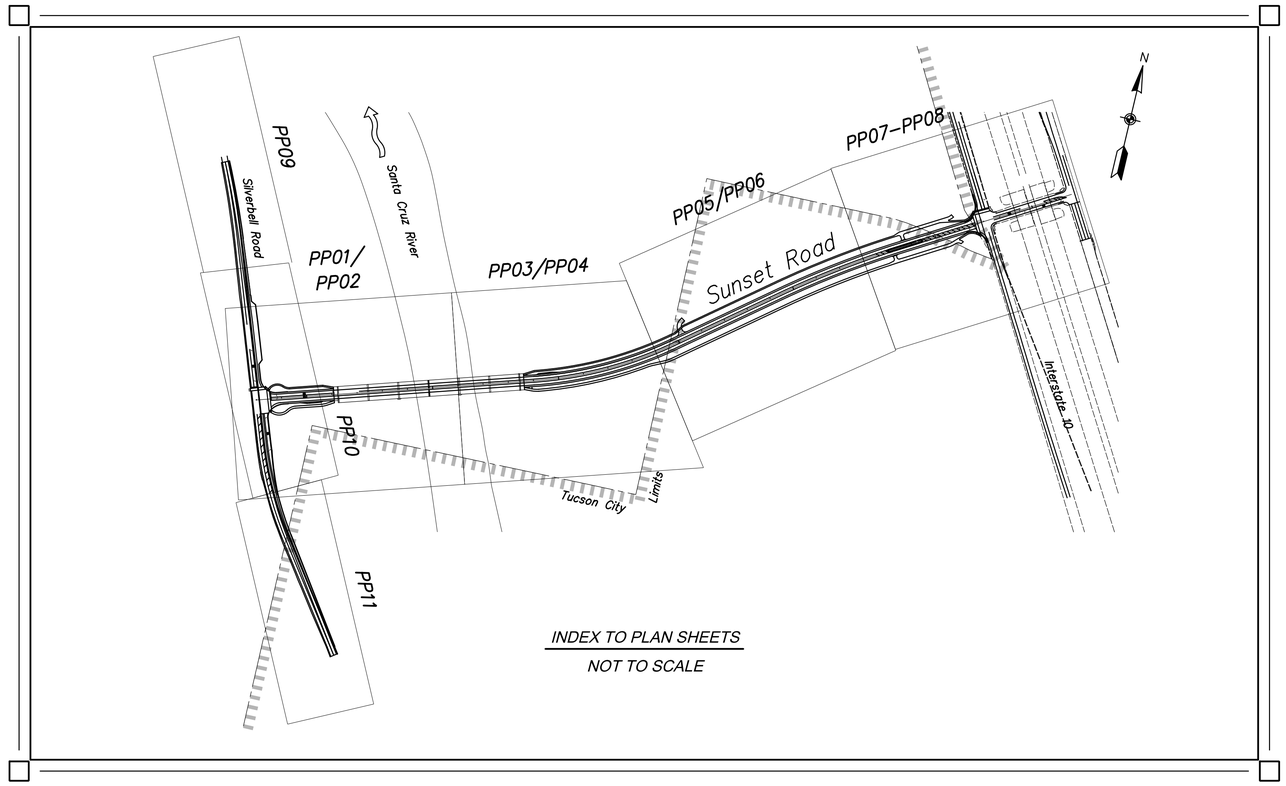

INDEX TO PLAN SHEETS
NOT TO SCALE

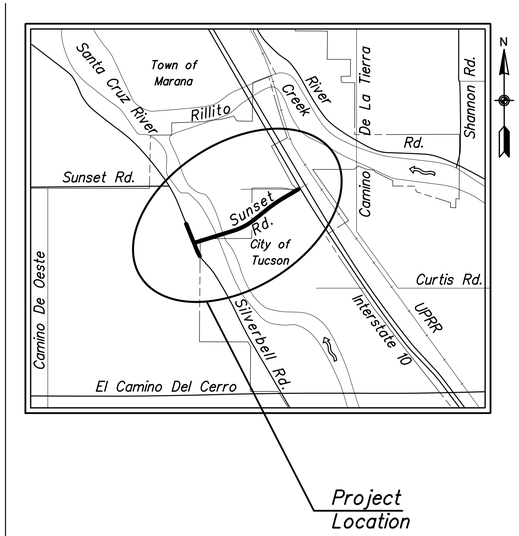

Location Map
NOT TO SCALE

Sections 8, 17, 18
T-13-S, R-13-E
G & S R & M
Pima County, Arizona

UPC-2014-060

Pima County Department of Transportation
201 N. Stone Ave. 4th floor Tucson, Arizona 85701
Phone Number: 724-6410
Priscilla S. Cornelio, P.E. Director

Call at least two full working days before you begin excavation.
ARIZONA 811
Arizona Blue Stake, Inc.
Dial 8-1-1 or 1-800-STAKE-IT (782-5348)
In Maricopa County: (602) 263-1100

Structural Grace, Inc
1430 E. Fort Lowell Rd., Ste. 200, Tucson, AZ 85719 (520) 320-0156

No.	Revisions	Engineer	Date
1	Removed TEP	JWG	1/11/16

No.	As Built	Engineer	Date

Registered Professional Engineer (Civil) 19227 JAMES W. GLOCK Date Signed 1/11/16 ARIZONA, U.S.A. Expires 12/31/17

Reviewed by	Engineer	Date
Mgr. Trans Engr.		
Mgr. Traffic Engr.		
Mgr. Field Engr.		
Mgr. WWM		

Approved: _____20__
Director

Project No. 4RTSUN

Sheet No. CS01 of CS01 | Page No. 1 of 203

W:\Jobs\2013\1326.01_Sunset_PDS\1326.01_Working\1326_Sunset_00_FC1_Rev 1.dgn
1/11/2016 4:15:23 PM
Sunset Road - Silverbell Road to I-10 - Project No. 4RTSUN

GENERAL NOTES

1. Construction shall be in conformance with the Specifications and Details listed in the Special Provisions.

2. Utility locations shown on plans were compiled based on the best information available to the department. Utility locations are not intended to be exact or complete. Prior to commencing construction, the contractor shall verify the location of all utilities with the appropriate organizations. Contact "Blue Stake" at 1-800-782-5348 two full working days prior to beginning construction (Saturdays and Sundays are not considered working days).

3. Right-of-way encroachments shall be removed only by order of Pima County, unless otherwise noted.

4. Removal of all cacti and native plants shall be in accordance with the provisions of the "Arizona Native Plant Law" A.R.S., Chapter 7.

5. The basis of bearing for this project is a grid bearing of N55°56'26"E between Pima County DOT/City of Tucson DOT geodetic, control point AI03 and Pima County DOT/City of Tucson DOT geodetic, control point AG09, as established from the Arizona Coordinate System, 1983 (Harn 92), Central Zone 0202.

6. Basis of Elevation: Vertical control for this project is based on Pima County benchmark designation Q291 AKA NGS Q291 CS055R. Based on NAVD 88 datum having an elevation of 2,232.24 feet. Station mark is a benchmark disk set in concrete stamped Q291 1951.

7. Basis of Coordinates: The horizontal control for this project is based on existing survey control points as provided by Pima County/City of Tucson geodetic control points. The published combined factor for "AJ05" = 0.9998762050 was used to convert grid coordinates to surface. To convert project coordinates to state plane coordinates, add 400,000 to the northings and add 900,000 to the eastings, then multiply by 0.9998762050.

8. Basis of Stationing: Stations for Sunset Road increase from west to east. Stations for Silverbell Road increase from north to south.

9. Soils information will be made available to prospective bidders in the Geotechnical Report. Soils information so provided shall be for information purposes only, and is not to be considered a part of the contract documents. This information was developed as accurately as possible by the methods used. Pima County accepts no responsibility for any conditions encountered which vary from the information provided.

10. The contractor shall maintain access to all driveways, alleys, and mailboxes during construction. The contractor will not restrict emergency vehicles, U.S. postal delivery, solid waste collections, and/or access to the adjacent properties, except as approved by the Engineer.

11. Omissions or conflicts between various elements of the drawings, notes and details shall be brought to the attention of the Engineer and resolved before proceeding with the work.

12. All stationing shown on the plans and profiles is along the construction centerline, unless otherwise noted.

13. Existing topographic conditions shown on the plan and profile sheets reflect conditions as of December 30, 2013.

14. Existing utilities include, but may not be limited to overhead and undergraound electric. telephone, television, sewer, gas, and water and shall be moved by others unless otherwise noted and shown in these plans.

15. Any revisions made to these plans must be approved by Pima County DOT prior to construction.

GENERAL NOTES CONT.

16. The protection of archeological features shall be the responsibility of the contractor. For initial ground disturbing activities, such as, but not limited to the earth moving for the excavation of the roadway (Sheets PP01 - PP11), excavation for the large drainage channel to the west of the Santa Cruz River (Sheets PP01 & CD01), excavation of the graded channel in the Santa Cruz River under spans 1 and 2 (Sheets PP01 & CD02), and the placement of the preservation fencing (Sheets EN01 & EN02), the contractor shall contact Jerome Hesse at SWCA (520-325-9194), five working days prior to disturbance, to arrange for archaeological monitoring of initial ground disturbing activities.

All construction activities, equipment, vehicles, and personnel must be kept within the project area, the limits of which are identified by preservation fencing and the plans. Absolutely no work and no ground disturbing activities are allowed beyond the edge of the delineated project area. The contractor shall assume all responsibility and liability for any encroachment beyond the extent of the delineated project area. The contractor is made aware that the areas adjacent to the delineated project area are highly sensitive and must be preserved. Any disturbance or damages beyond the delineated project area that is caused by the contractor or subcontractors on this project will be the liability and responsibility of the contractor. Mitigation of any disturbance or damage will be subject to county oversight and approval. All mitigation costs will be the responsibility of the contractor.

Should any archaeological resources, human remains, or funerary objects be discovered during any stage of project implementation, all surface-disturbing activities in the area of discovery shall immediately cease and the Pima County Engineer shall be contacted, the Pima County Office of Sustainability and Conservation (520-724-6684) will be notified immediately, to arrange for proper assessment and treatment of the resources. State laws ARS 41-865 and ARS 41-844 require that the Arizona State Museum (520-621-4795) be notified of the discovery of human remains by the Contractor so that cultural groups who claim cultural or religious affinity to them can make appropriate arrangements for the repatriation and reburial of the remains. The human remains will be removed from the site by a professional archaeologist pending consultation and review by the Arizona State Museum and the concerned cultural groups. The work is subject to delay in that location pursuant to ARS 41-844 while an examination takes place.

IRRIGATION SLEEVE SCHEDULE

PS 8

NUMBER	STATION (APPROX.)	OFFSETS (APPROX.)	SIZE & TYPE	LENGTH
3	70+00	26' Lt.± & 26' Rt.±	6" SCH. 40 P.V.C.	52 L.F.
4	71+20	N/A	6" HDPE	20 L.F.
5	78+50	N/A	6" HDPE	20 L.F.
7	80+00	26' Lt.± & 26' Rt.±	6" SCH. 40 P.V.C.	52 L.F.
9	86+00	26' Lt.± & 26' Rt.±	6" SCH. 40 P.V.C.	52 L.F.
14	93+50	26' Lt.± & 26' Rt.±	6" SCH. 40 P.V.C.	52 L.F.
32	85+25	59' Lt.±	6" SCH. 40 P.V.C.	22 L.F.

-This Irrigation Sleeve Schedule shows the sleeves crossing Sunset Road and the Driveway for TEP access, and the sleeves through the bridge abutments only.
-Refer to Irrigation Plan sheet IRS01 for all other irrigation sleeve locations.
-Irrigation Sleeves are paid for under Bid Item No. 8080001, Landscape Irrigation System.

ABBREVIATIONS NOT INCLUDED IN PAG STD. DTL.

Asphalt Rubber Asphaltic Concrete	A.R.A.C.
Correction	Corr.
Edge of Pavement	E.P.
High Density Polyethylene	HDPE
Hydraulic Grade Line	H.G.L.
Point of Compound Curve	P.C.C.
Pounds	Lbs.
Schedule	SCH.
Shoulder	Shld.
Stopping Sight Distance	SSDs
Vertical Curve	V.C.
Not in Contract	N.I.C.

LENGTH OF PROJECT

Sunset Rd. Sta. 67+96.43 to Sta. 101+64.02
Gross Length = 3,367.59' (0.64 Mile)

Silverbell Rd. Sta. 244+74.07 to Sta. 264+89.00
Gross Length = 2,014.93' (0.38 Mile)

DESIGN DATA

DESIGN TRAFFIC	SUNSET RD.	SILVERBELL RD.
2010 ADT	N/A	5,249 veh/day
2025 ADT	10,750 veh/day	9,633 veh/day*

* ADT represents average at Sunset/Silverbell Intersection

DESIGN SPEED

ROADWAY	DESIGN	POSTED
Sunset Rd.	40 mph	35 mph
Silverbell Rd.	50 mph	45 mph

Priscilla S. Cornelio, P.E., Director

Designed	MPK	Date 11/15
Drawn	RM	11/15
Checked	CJR	11/15
Proj. Engr.	MPK	11/15

No.	Revision Description	Engineer	Date

Registered Professional Engineer (Civil) CERTIFICATE NO. 40950 MICHAEL P. KERSHNER ARIZONA U.S.A. DATE EXPIRES 6-30-16

AECOM
TRANSPORTATION
AECOM USA, Inc.
4201 N. Oracle Rd., Suite 400
Tucson, Arizona 85705
T 520.887.7800 F 520.887.8438
www.aecom.com

ARIZONA811 BLUE STAKE, INC. CALL 8 BLUE STAKE THREE FULL WORKING DAYS BEFORE YOU DIG IN ARIZONA

Pima County Department of Transportation

GENERAL NOTES SHEET
SUNSET ROAD - SEGMENT I
SILVERBELL RD. TO I-10

PROJECT NO. 4RTSUN

SUNSET ROAD - SILVERBELL ROAD TO I-10 - PROJECT NO. 4RTSUN

Scale: N.T.S. | Sheet GN01 of GN02 | Page 02 of 203

EARTHWORK NOTES

1. Excavation (Overexcavation and Removal) includes material between Sunset Rd Const. ℄ Sta. 68+30 and 69+50. This material shall be used in embankment areas outside of the roadway prism only.

2. Excavation (Overexcavation and Recompaction) includes material which shall be excavated and recompacted. See Detail RD06 for overexcavation and recompaction details. Includes stockpiled volume found in the gravel pit.

3. Roadway Excavation is the total roadway volume excavated. Includes excavation of the roadside channel east of the Santa Cruz River bridge and roadside V-ditches. Also includes the pavement removal along Silverbell Rd. Does not include structural, drainage and overexcavation.

4. Drainage Excavation includes excavation related to downstream grading for pipe P1, west roadside channel and the left overbank grading. Does not include additional excavation required for riprap installation.

5. See Pipe Excavation, Shading and Bedding detail this sheet for limits. Pipe excavation, shading, bedding and trench backfill are included in the unit price of the pipe. Pipe excavation is included in the total excavation and is available for embankment after shrink factors are applied. Onsite materials are unsuitable for pipe shading, bedding, and trench backfill requirements and import material shall be used.

6. Structural Excavation applies to bridge retaining walls, bridge abutments, bridge piers and drilled shafts. Structural excavation is included in the total excavation and is available for embankment after shrink factors are applied. Onsite materials are unsuitable for structure backfill requirements and import materials shall be used. SD 5.01 and SD 5.02 are included to show the limits of structural excavation and backfill only. There is no separate payment for structural excavation or backfill as this is considered incidental to the cost of the structural items.

7. Excavation to Install Riprap is the total volume excavated for concrete drainage inlet and outlet protection at pipe P1 and drainage related riprap excluding drainage excavation. There is no separate payment for Excavation to Install Riprap as this is considered incidental to the cost of the riprap items.

8. Pavement Millings from Silverbell and Sunset Roads include milled pavement that is available for embankment. Payment for pavement milling is covered under their respective pay items.

9. Total Excavation = Excavation (Overexcavation and Removal) + Excavation (Overexcavation and Recompaction) + Roadway Excavation + Drainage Excavation + Pipe Excavation + Structural Excavation + Excavation to Install Riprap + Pavement Millings from Silverbell and Sunset.

10. Total Shrinkage is 25% for all excavation and overexcavation areas outside of the gravel pit. Shrinkage is 10% for overexcavation of stockpiled material previously imported to the pit from the Orange Grove project. This assumes the material is used in embankment areas outside of the roadway prism, compacted to 85% maximum density. See Detail RD06 for compaction limits within the pit. Shrinkage does not include existing pavement removal along Silverbell Road and any pavement millings.

11. Net Excavation = Total Excavation - Total Shrinkage. Net Excavation is the excavation available for embankment.

12. Roadway Embankment is the total roadway embankment volume required including material to fill gravel pit.

13. Overexcavation Embankment is the total roadway embankment volume required to place in overexcavation locations.

14. Ground Compaction = Embankment area x 0.30 ft.

15. Catch Basin Berm Embankment is additional embankment required for catch basin berms. See Sheet SD01 for Details. See Storm Drain Plan and Profile Sheets for locations.

EARTHWORK NOTES CONT.

16. Silverbell Rd. Shoulder Build-up is material to be placed adjacent to Silverbell Rd. to match the pavement overlay finished grade. See Sheet TYP03. Payment for Shoulder Build-up shall be under Bid Item No. 2030901, Borrow.

17. Pipe Culvert and Structure Backfill Embankment Adjustment includes the roadway embankment volume that overlaps with the pipe bedding, pipe shading and pipe volumes in non-trench conditions. Also includes the roadway embankment volume that overlaps with the structure backfill located behind the bridge abutments and retaining walls. This total volume is subtracted from the total embankment.

18. Net Embankment volume is the total volume complete in place including ground compaction.
Net Embankment = Roadway Embankment + Overexcavation Embankment + Ground Compaction + Catch Basin Berm Embankment - Pipe Culvert and Structure Backfill Embankment Adjustment.

19. Borrow = Net Embankment - Net Excavation

20. Existing Pavement Volume is the volume of pavement removed along Silverbell Road, near the Eastbound Frontage Road and along Silverbell Road east of the saw cut line. Pavement removal will be paid under Bid Item No. 2020001, Removal of Structures & Obstructions. The pavement volume was calculated using an assumed 2.5" pavement thickness. The existing pavement quantities shall be used in acceptable embankment areas, in accordance with the Standard Specifications.

21. To facilitate archaeology efforts, elevated level fill (ELF) was removed within the outlined area shown on Sheets PP05 and PP07 to a depth of three feet for a total quantity of approximately 16,800 CY and stockpiled within the project area. The existing ground shown in the profile, the earthwork and cross sections were not revised to reflect removal of this fill dirt within this area. The contractor shall coordinate with Pima County to determine how the fill can be used within the project fill limits.

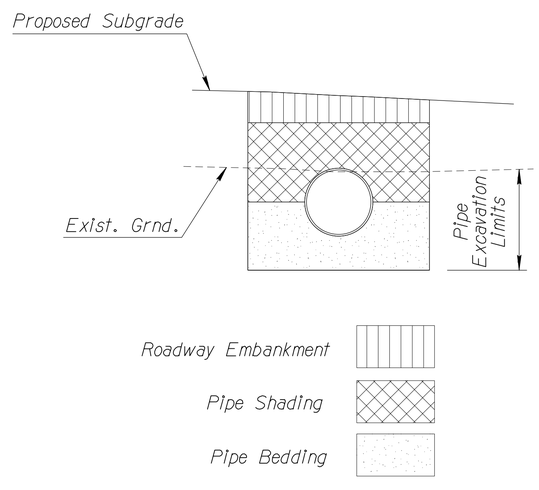

PIPE EXCAVATION, SHADING & BEDDING
REFER TO PAG STD. DTL. 108
N.T.S.

EARTHWORK QUANTITIES SUMMARY

ITEM NO.	ITEM DESCRIPTION	TOTAL VOLUME (CY)
2030500	(1) Excavation (Overexcavation and Removal)	514
2030502	(2) Excavation (Overexcavation and Recompaction) Areas Outside of Gravel Pit: Stockpiled Material In Gravel Pit:	 9,023 38,600
2030300	(3) Roadway Excavation	33,425
2030401	(4) Drainage Excavation	9,895
	(5) Pipe Excavation	2,010
	(6) Structural Excavation	4,595
	(7) Excavation to Install Riprap	495
	(8) Pavement Millings from Silverbell and Sunset	175
	(9) Total Excavation	98,732
	(10) Total Shrinkage (Varies)*	18,849
	(11) NET EXCAVATION (Available for Embankment)	79,883
	(12) Roadway Embankment	108,199
	(13) Overexcavation Embankment	48,138
	(14) Ground Compaction (0.30 Ft.)	2,762
	(15) Catch Basin Berm Embankment	30
	(16) Silverbell Rd. Shoulder Build-up	51
	(17) Pipe Culvert and Structure Backfill Embankment Adjustment	-2,741
	(18) NET EMBANKMENT (Embankment Demand)	156,439
2030901	(19) Borrow	76,556
	Quantities Below are for Informational Purposes Only	
	(6) Structure Backfill	1,652
	(5) Trench Backfill	776
	(5) Shading (Pipes)	829
	(5) Bedding (Pipes)	615
	(20) Existing Pavement Volume	114
	(21) Elevated Level Fill (ELF) Stockpiled	16,800

*The shrink factor for the stockpiled material presented in the Geotechnical Report differs from the shrink factor presented on this sheet. A weighted average approach combined with engineering judgement with the assumption that the material will be compacted to 85% resulted in the use of a 10% shrink factor for the stockpiled material.

Priscilla S. Cornelio, P.E., Director

No.	Revision Description	Engineer	Date

		Date
Designed	MPK	11/15
Drawn	RM	11/15
Checked	CJR	11/15
Proj. Engr.	MPK	11/15

REGISTERED PROFESSIONAL ENGINEER (CIVIL) CERTIFICATE NO. 40990 MATTHEW P. KERSHNER DATE SIGNED 9/17/15 EXPIRES 6-30-16

AECOM
TRANSPORTATION
AECOM USA, Inc.
5151 E. Broadway Blvd., SUITE 400
Tucson, Arizona 85709
T 520.887.1800 F 520.887.8438
www.aecom.com

CALL at least two full working days before you begin excavation
ARIZONA 811
BLUE STAKE, INC.
(602) 263-1100 (800) 782-5348

SUNSET ROAD - SILVERBELL ROAD TO I-10 - PROJECT NO. 4RTSUN

Pima County Department of Transportation

EARTHWORK NOTES SHEET
SUNSET ROAD - SEGMENT 1
SILVERBELL RD. TO I-10

PROJECT NO. 4RTSUN

Scale:	N.T.S.	Sheet GN02 of GN02	Page 03 of 203

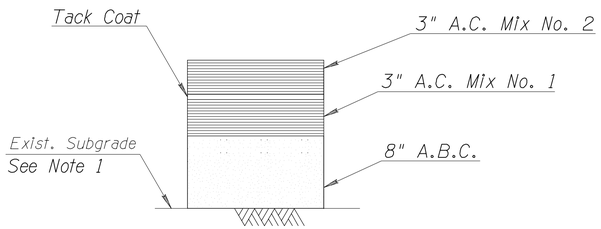

Total Thickness = 14"
R-Value = 25

PAVEMENT STRUCTURAL SECTION NO. 1

Sunset Road from Silverbell Road to I-10

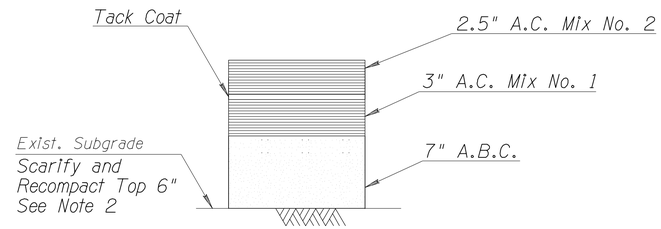

Total Thickness = 12.5"
R-Value = 30

PAVEMENT STRUCTURAL SECTION NO. 2

Silverbell Road Widened Areas

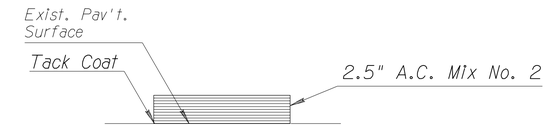

Total Thickness = 2.5"

PAVEMENT STRUCTURAL SECTION NO. 3

Silverbell Road
Overlay Exist. Pav't.

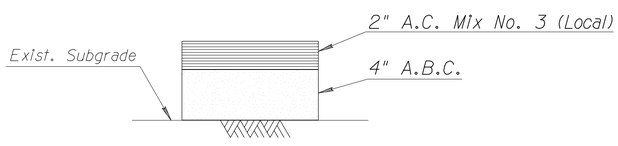

Total Thickness = 6"

PAVEMENT STRUCTURAL SECTION NO. 4

A.C. Path

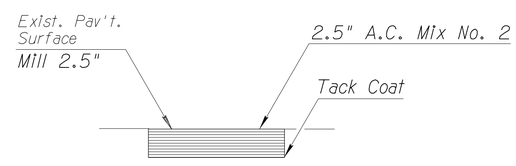

Total Thickness = 2.5"

PAVEMENT STRUCTURAL SECTION NO. 5

Sunset Road (Under I-10 Mainline)
Mill & Replace Exist. Pav't.

NOTES:

1. See Dtl. RD06 for pavement subgrade overexcavation and recompaction requirements.
2. Scarification and recompaction shall be conducted in accordance with Section 203 of the Standard Specifications.

Priscilla S. Cornelio, P.E., Director

Designed	MPK	Date
Drawn	RM	11/15
Checked	CJR	11/15
Proj. Engr.	MPK	11/15

No.	Revision Description	Engineer	Date

Registered Professional Engineer (Civil) CERTIFICATE NO. 40590 MATTHEW P. KERSHNER Date Signed 11/13/15 EXPIRES 6-30-16

AECOM

TRANSPORTATION

AECOM USA, Inc.
5151 E. Broadway Blvd., SUITE 400
Tucson, Arizona 85705
T 520.887.7800 F 520.887.8438

www.aecom.com

CALL at least two full working days before you begin excavation
ARIZONA 811
BLUE STAKE, INC.
(602) 263-1100 (520) 622-0094
(800) 782-5348 (800) 253-9860
www.azbluestake.com

Pima County Department of Transportation

PAVEMENT STRUCTURAL SECTIONS
SUNSET ROAD - SEGMENT 1
SILVERBELL RD. TO I-10

PROJECT NO. 4RTSUN

SUNSET ROAD - SILVERBELL ROAD TO I-10 - PROJECT NO. 4RTSUN

Scale:	N.T.S.	SheetTYP01 of TYP03	Page 04 of 203

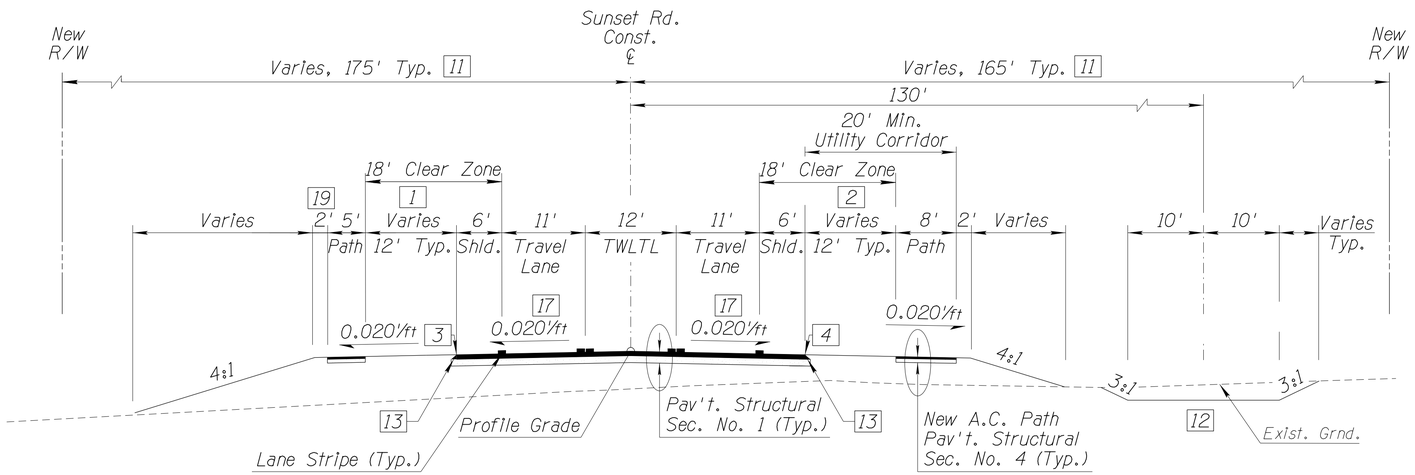

SUNSET ROAD
TYPICAL SECTION

Sta. 68+81.97 to Sta. 71+07.71

16 Sta. 71+07.71 to Sta. 78+62.29
Santa Cruz River Bridge Exception
See Bridge Sheets for Typical Section

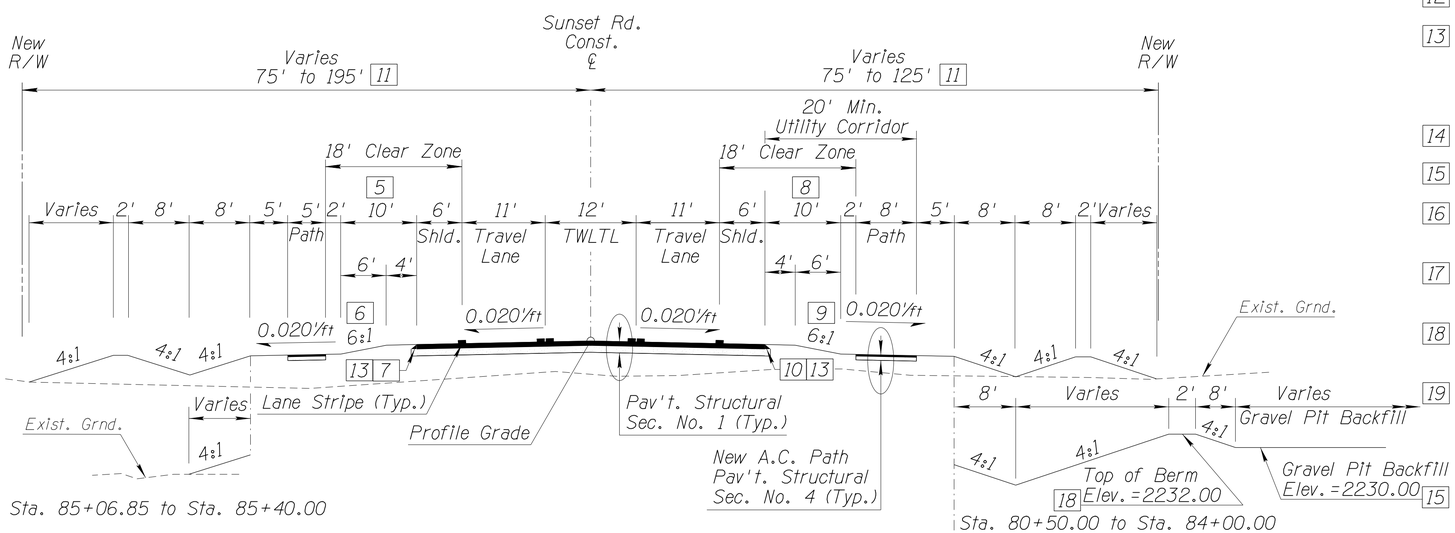

Sta. 85+06.85 to Sta. 85+40.00

SUNSET ROAD
TYPICAL SECTION

Sta. 78+62.29 to Sta. 85+40.00

Sta. 80+50.00 to Sta. 84+00.00

Sta. 84+00.00 to Sta. 84+50.00

Sta. 84+50.00 to Sta. 85+40.00

KEY NOTES:

1. Varies 29.7' to 12' from Sta. 68+81.97 to Sta. 69+34.49
   Varies 12' to 1.6'± from Sta. 70+65.94 to Sta. 71+07.71
   See Staking Sheet ST01.
2. Varies 30.6'± to 12' from Sta. 68+81.97 to Sta. 69+53.33
   Varies 12' to 1.6'± from Sta. 70+64.71 to Sta. 71+07.04
   See Staking Sheet ST01.
3. Conc. Ford Wall from Sta. 68+81.97 to Sta. 69+25.00
   Conc. Curb Terminal Section from Sta. 71+04.71 to Sta. 71+07.71
4. Guard Rail Terminal Apron Sta. 69+77.70 to Sta. 70+66.95
   See Dtl. RD01 and Barrier Summary Sheet SB01.
5. Varies 0' to 10' from Sta. 78+62.29 to Sta. 79+06.39
   Varies 10' to 22' from Sta. 85+00.93 to Sta. 85+40.93
6. Varies 50:1 to 6:1 from Sta. 78+85.00 to Sta. 79+15.00
   Varies 6:1 to 50:1 from Sta. 84+70.00 to Sta. 85+00.00
7. Conc. Curb Terminal Section from Sta. 78+62.29 to Sta. 78+65.29
   Guard Rail Terminal Apron from Sta. 78+87.29 to Sta. 79+77.70
   See Dtl. RD01 and Barrier Summary Sheet SB01.
8. Varies 0' to 10' from Sta. 78+62.29 to Sta. 79+05.22
   Varies 10' to 22' from Sta. 83+58.99 to Sta. 84+29.14
9. Varies 50:1 to 6:1 from Sta. 78+95.00 to Sta. 79+25.00
10. Barrier Departure Termination from Sta. 79+16.14 to Sta. 80+06.78
    See Barrier Summary Sheet SB01.
11. See Right-of-Way Plans for additional information.
12. See Sheet CD01 for Channel Details.
13. Safety Edge. See Detail this sheet.
    Sta. 69+25.00 to Sta. 70+97.71 Lt., Sta. 69+25.00 to Sta. 69+71.45 Rt.,
    Sta. 70+60.70 to Sta. 70+91.92 Rt., Sta. 78+75.29 to Sta. 79+16.16 Lt.,
    Sta. 80+06.78 to Sta. 85+40.00 Lt., Sta. 78+92.29 to Sta. 85+40.00 Rt.
14. See Sheets CD04-CD06 for Channel Details.
15. Gravel Pit Backfill Details, See Detail RD06.
16. Aggregate Base Course (A.B.C.) under the approach slabs shall be 8" thick and compacted to 100%.
17. Cross slope varies from Sta. 68+81.97 to Sta. 69+50.00.
    See Staking Sheet ST01.
18. Transition top of berm elevation from 2228.70 at Sta. 80+50.00 to 2232.00 at Sta. 81+00.00. End berm from Sta. 83+80.00 to Sta. 84+00.00.
19. Varies 2' to 12' from Sta. 69+09.34 to Sta. 69+34.49. 12' from Sta. 69+34.49 to Sta. 70+15.00. Varies 12' to 2' from Sta. 70+15.00 to Sta. 70+25.00.

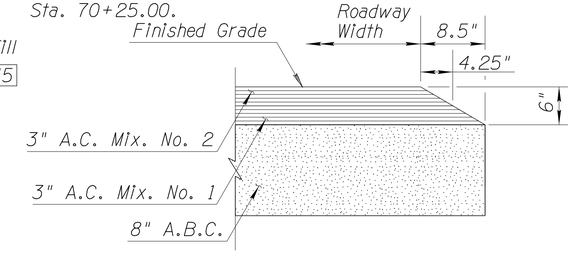

SAFETY EDGE DETAIL FOR SUNSET ROAD

N.T.S.

No.	Revision Description	Engineer	Date

		Date
Designed	MPK	11/15
Drawn	RM	11/15
Checked	CJR	11/15
Proj. Engr.	MPK	11/15

Priscilla S. Cornelio, P.E., Director

Pima County Department of Transportation

TYPICAL SECTIONS
SUNSET ROAD - SEGMENT 1
SILVERBELL RD. TO I-10

PROJECT NO. 4RTSUN

AECOM
TRANSPORTATION
AECOM USA, Inc.
5151 E. Broadway Blvd., Suite 400
Tucson, Arizona 85711
T 520.887.7800 F 520.887.8438
www.aecom.com

SUNSET ROAD - SILVERBELL ROAD TO I-10 - PROJECT NO. 4RTSUN

Scale: N.T.S. | Sheet TYP02 of TYP03 | Page 05 of 203

FILE NAME: P:\60311412 Sunset Rd\900-Work\910-CAD\20-SHEETS\4RTSUN_typ02_segl.dgn DATE: 11/13/2015 TIME: 10:02:38 AM MurrietaR

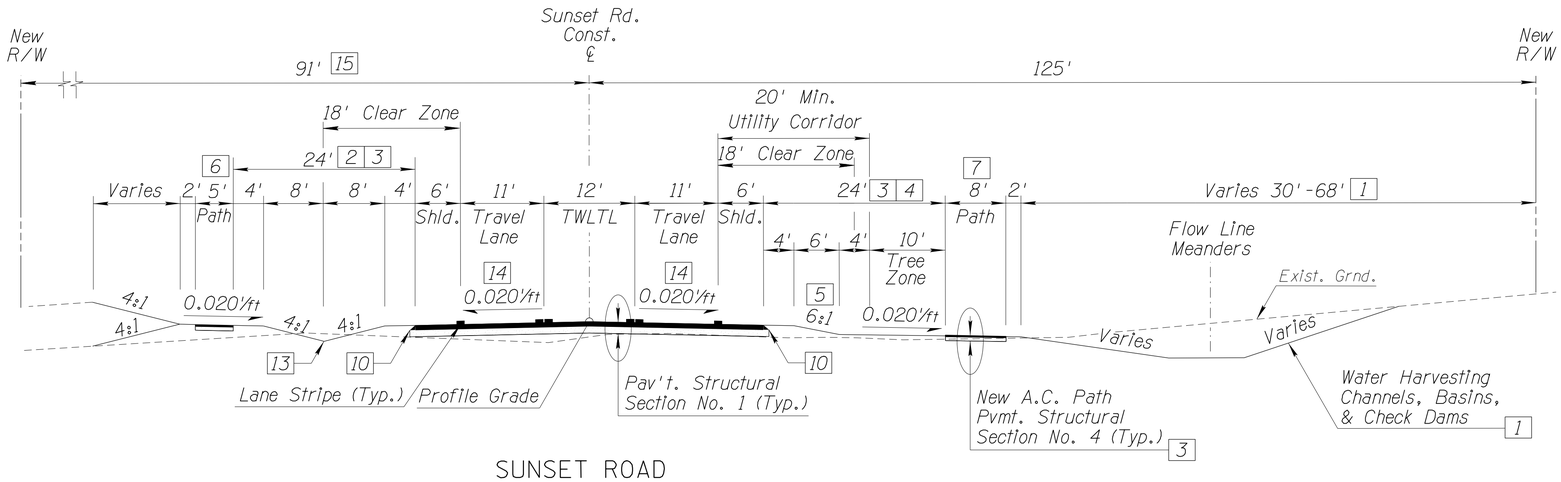

SUNSET ROAD
TYPICAL SECTION

Sta. 85+40.00 to Sta. 97+90.45

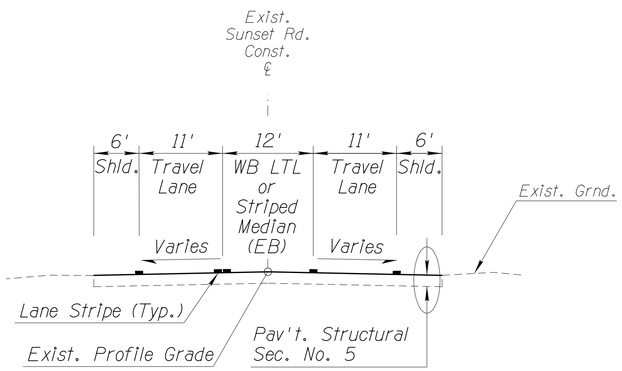

SUNSET ROAD
TYPICAL SECTION
(UNDER I-10)

Sta. 98+34± to Sta. 101+45±

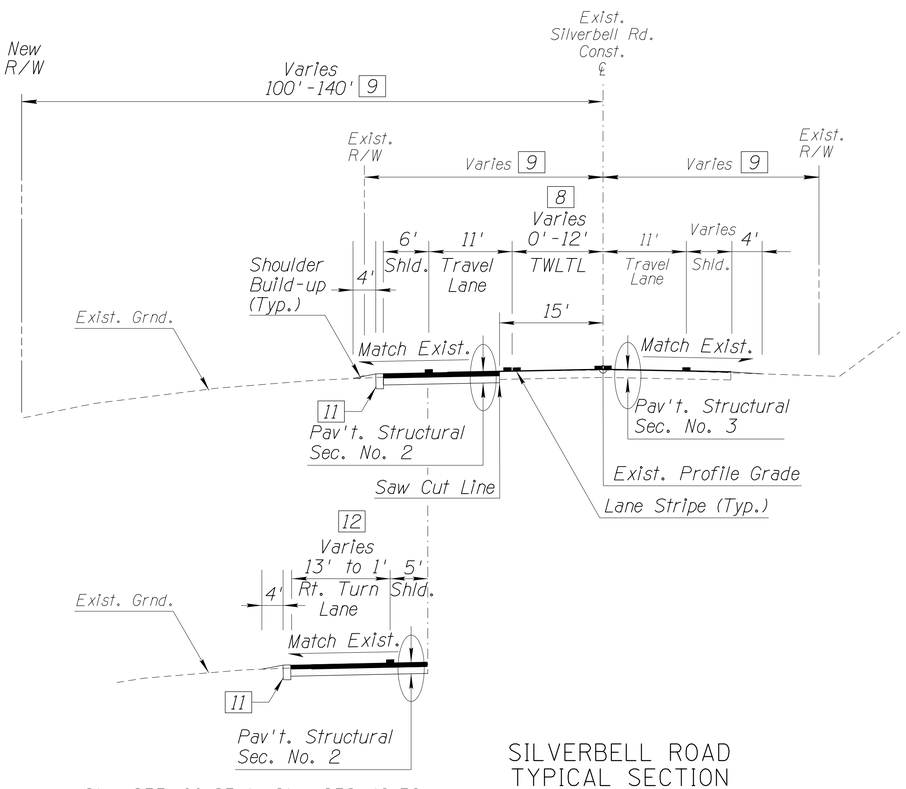

Sta. 255+00.85 to Sta. 258+16.56

SILVERBELL ROAD
TYPICAL SECTION

Sta. 244+74.07 to Sta. 264+89.00

KEY NOTES:

1. See Sheet CD04-CD06 for Channel Details.
2. Varies 24' to 0' from Sta. 96+32.98 to Sta. 97+27.59
3. See Staking Sheet ST02 for Staking Information.
4. Varies 24' to 0' from Sta. 96+50.00 to Sta 97+26.75
5. Varies 6:1 to 20:1 from Sta. 93+85.00 to Sta. 94+15.00
   20:1 from Sta. 94+15.00 to Sta. 94+30.00
   Varies 20:1 to 6:1 from Sta. 94+30.00 to Sta. 94+60.00
   Varies 6:1 to flat from Sta. 96+45.00 to Sta. 96+75.00
6. A.C. Path Width Varies from 5' to 12' from Sta. 94+43.08 to Sta. 94+67.88
   A.C. Path Width is 12' from Sta. 94+67.88 to Sta. 96+88.25
   See Staking Sheet ST02.
7. A.C. Path Width Varies from 8' to 12' from Sta. 93+92.04 to Sta. 94+17.41.
   A.C. Path Width is 12' from Sta. 94+17.41 to Sta. 96+93.81
8. Varies 0' to 12' from Sta. 244+74.07 to Sta. 251+23.23
   12' from Sta. 251+23.23 to Sta. 258+05.42
   Varies 12' to 0' from Sta. 258+05.42 to Sta. 264+89.00
9. See Right-of-Way Plans for additional Information.
10. Safety Edge, See Detail on Sheet TYP02.
    Sta. 85+40.00 to Sta. 94+59.88 Lt.
    Sta. 94+87.88 to Sta. 97+24.14 Lt.
    Sta. 85+40.00 to Sta. 94+09.47 Rt.
    Sta. 94+37.71 to Sta. 97+22.75 Rt.
11. Concrete Ford Wall (1'x2' or 1'x6'). See Roadway Plan Sheets for locations and Detail RD11.
12. 13' from Sta. 255+00.85 to Sta. 256+33.06
    Varies 13' to 1' from Sta. 256+33.06 to Sta. 258+16.56
13. Exception Sta. 94+63.88 to Sta. 94+83.88
    See Detail RD04 and Sheet SD03.
14. Cross slope varies from Sta. 96+50.00 to Sta. 97+90.45
    See Staking Sheet ST02.
15. New R/W is 91' from Sta. 85+40.00 to Sta. 95+00.00.
    Existing R/W varies from 101.37' to 153.42' from Sta. 95+00.00 to Sta. 95+29.84. See Right-of-Way Plans for additional information.

Priscilla S. Cornelio, P.E., Director

Designed	MPK		Date
Drawn	RM		11/15
Checked	CJR		11/15
Proj. Engr.	MPK		11/15

No.	Revision Description	Engineer	Date

Registered Professional Engineer (Civil) CERTIFICATE NO. 42590 MATTHEW P. KERSHNER STATE OF ARIZONA DATE EXPIRES 6-30-16

AECOM
TRANSPORTATION
AECOM USA, Inc. 5151 E. Broadway, SUITE 400 Tucson, Arizona 85703 T 520.887.7800 F 520.887.8438
www.aecom.com

ARIZONA 811 BLUE STAKE, INC. CALL 8 WORK DAYS FOR EXISTING UTILITY LOCATIONS WITHIN THE STATE OF ARIZONA

Pima County Department of Transportation

TYPICAL SECTIONS
SUNSET ROAD - SEGMENT 1
SILVERBELL RD. TO I-10

PROJECT NO. 4RTSUN

SUNSET ROAD - SILVERBELL ROAD TO I-10 - PROJECT NO. 4RTSUN

Scale:	N.T.S.	Sheet TYP03 of TYP03	Page 06 of 203

FILE NAME: P:\60311412 Sunset Rd\900-Work\910-CAD\20-SHEETS\4RTSUN_typ03_seg1.dgn DATE: 11/13/2015 TIME: 10:04:14 AM MurrietaR

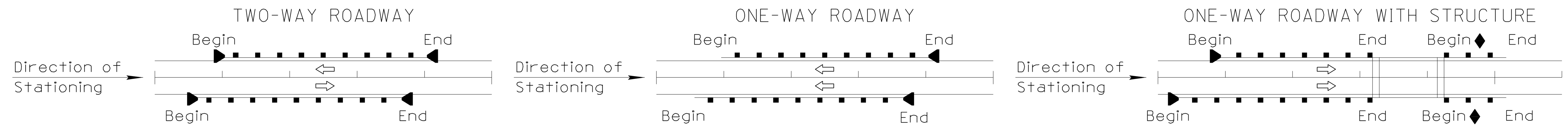

BARRIER

LOCATION: Beginning Sta. (Approximate) (0)	Plan Reference Number □	Type "A" C-10.01, Type "B" C-10.02	C-10.03 (Timber)	C-10.04 (Steel)	Dtl.	NEW GUARDRAIL (No. 9050001): Length (Linear Feet) (0.0)	C-10.06 Nested W-Beam ▲ Length (Linear Feet) (0.0)	C-10.07 Bolted Anchor (Each)	Shop Curved Guardrail Length (Linear Feet) (0.0)	Reconstruct-Exist. Post, Block	Reconstruct-New Post, Block	Remove and Salvage	Construct from Salvage	Remove	EXISTING GR: Length (Linear Feet) (0.0)	Remove Exist. Length (Linear Feet) (0.0)	CONCRETE BARRIER: C-10.40 (32" Median)	C-10.41 (42" Median)	C-10.50 (32" Half)	C-10.51 (32" Half w/ Sidewalk)	C-10.52 (32" Half w/ Gutter) △	C-10.53 (42" Half w/ Gutter) △	C-10.54 (32" Half at Piers)	C-10.55 (42" Half at Piers)	Bridge Barrier ◑	Length (Linear Feet) (0.0)	CABLE: High-Tension Cable Barrier ● Length (Linear Feet) (0)	C-12.30 Chain-Link Cable Length (Linear Feet) (0.0)
70+09 Rt.	8	A	X			25.0																						
78+62 Rt.	9																											
78+62 Lt.	8	A	X			50.0																						
Sheet Total						75.0																						

TRANSITION / END TREATMENT

Station	Begin = Treatment at Beginning / End = Treatment at End	RAIL (Each, SD 1.03 No. 9050430): C-10.30 Thrie Beam	Thrie Beam ◑	Reconstruct Rub Rail	CONCRETE BARRIER (Each, No. 9100008): C-10.70 32" or C-10.72 42"	C-10.71 32" or C-10.73 42" △	C-10.74 42" to 32"	C-10.75 32" (Mod)	C-10.76 32" on Radius	Bridge Barrier ◑ SD 1.01		New	Reconstruct (See Special Prv) (No. 6011140)	Remove and Salvage	Construct from Salvage	Remove	END TREATMENT (Action / Each ◪; No. 9050020, No. 9050036): Tangent SKT-350 ◧○	Flared SRT-350 or FLEAT-350 ◧	End Anchor C-10.08	High-Tension Cable Terminal	Sand Barrels C-1 or Dtl. ■	Attenuator Dtl.	BCT (L=12.5')	REMARKS
70+09 Rt.	Begin											X					1							See Dtl. RD01
	End		X							X		X												
78+62 Rt.	Begin									X														Type 1
	End							X				X												
78+62 Lt.	Begin											X							1					See Dtl. RD01 Begin End Anchor Sta. 78+62
	End											X					1							
Sheet Total			1					1									2		1					

THE ZEROS IN PARENTHESES (0.0) INDICATE THE DIMENSIONAL PRECISION FOR THAT COLUMN

▲ THE LENGTH OF NESTED W-BEAM IS FOR TYPES 2 OR 3 (37.5'). DETERMINATION OF TYPE (1, 2 or 3) TO USE IS MADE IN THE FIELD. THE PAY QUANTITY IS THE ACTUAL LENGTH INSTALLED (25.0' or 37.5').

△ SPECIFY GUTTER WIDTH UNDER "REMARKS"

♦ BEGIN STATION AFTER BRIDGE TRANSITION

◒ SEE BRIDGE SHEETS FOR DETAILS AND QUANTITIES

● LENGTH IS FROM LENGTH OF NEED (LON) POINT TO LON POINT. ACTUAL SEGMENT LENGTH VARIES DEPENDING ON TERMINAL TYPE. SEE SPECIAL PROVISIONS.

○ TYPE SPECIFIED UNDER REMARKS

SEE ADOT STANDARD DRAWINGS FOR C STANDARDS

⬙ SPECIFY TYPE 1 OR 2 UNDER 'REMARKS'

◪ ALLOWABLE END TREATMENT OPTIONS ARE INDICATED WITH THE NUMBER '1' IN THE SPACE. BLANK SPACES ARE NOT VIABLE ALTERNATIVES.

■ ARRAY TYPE AND ANGLE IS NOTED UNDER 'REMARKS'

◧ NOTE: FOR AS-BUILT PREPARATION - CIRCLE END TREATMENT INSTALLED

STATIONS ARE REFERENCED FROM SUNSET RD. CONST. ℄ UNLESS NOTED OTHERWISE

REV. DATE: 01/16/2009

FILE NAME: P:\60311412 Sunset Rd\900-Work\910-CAD\20-SHEETS\4RTSUN_sb01_seg1.dgn   DATE: 11/13/2015   TIME: 10:04:51 AM   MurrietaR

Priscilla S. Cornelio, P.E., Director

		Date
Designed	MPK	11/15
Drawn	RM	11/15
Checked	CJR	11/15
Proj. Engr.	MPK	11/15

No.	Revision Description	Engineer	Date

Registered Professional Engineer (Civil) CERTIFICATE NO. 40990 MATTHEW P. KERSHNER DATE SIGNED 11/12/15 ARIZONA, U.S.A. EXPIRES 6-30-16

AECOM www.aecom.com
TRANSPORTATION
AECOM USA, Inc.
333 E. WETMORE RD, SUITE 400
Tucson, Arizona 85705
T 520.887.1800 F 520.887.8438

Call at least two full working days before you begin excavation. ARIZONA811 Arizona Blue Stake, Inc. Dial 8-1-1 or 1-800-STAKE-IT (782-5348) In Maricopa County: (602)263-1100

Pima County Department of Transportation

BARRIER SUMMARY SHEET
SUNSET ROAD - SEGMENT I
SILVERBELL RD. TO I-10
PROJECT NO. 4RTSUN

SUNSET ROAD - SILVERBELL ROAD TO I-10 - PROJECT NO. 4RTSUN

Scale:	N.T.S.	Sheet SB01 of SB02	Page 07 of 203

NOTE:
THE ZEROS IN PARENTHESIS (0, 0.0 & 0.00) IN THE HEADING OF SOME OF THE COLUMNS IS THE PRECISION OF THE DIMENSION FOR THAT COLUMN.

NOTE:
FOR PIPE CULVERT PLACEMENT SEE ADOT STANDARD DRAWINGS C-13.10 AND C-13.15.

NOTE:
PIPE OPTIONS SELECTED ARE THOSE REQUIRED TO MEET MINIMUM SERVICE LIFE.
SHADED PIPE OPTION FIELDS ARE NOT ALLOWABLE ALTERNATES.

CSP - CORRUGATED STEEL PIPE
CAP - CORRUGATED ALUMINUM PIPE
RCP - REINFORCED CONCRETE PIPE
NRCP - NON-REINFORCED CONCRETE PIPE
NRCIPCP - NON-REINFORCED CAST-IN-PLACE CONCRETE PIPE
CHDPEP - CORRUGATED HIGH DENSTIY POLYETHYLENE PIPE

Station (Sunset Rd. Const. ℄)	Plan Reference Number	◓ Controlling Fill Height Range	Size, Corrugated (In.)	Size, Smooth (In.)	Length (0) (Measured from center of structure) (Ft.)	Skew (0) (Degree)	◪ Corrugation	Wall Thickness (0.00)	Zinc (CSP Coating)	Bituminous Coated Zinc (CSP Coating)	Aluminum (CAP Coating)	Bituminous Coated Aluminum (CAP Coating)	◪ Corrugation	Wall Thickness (0.00)	Uncoated (RCP Coating)	Bituminous Coated (RCP Coating)	Class - Non Trench (NRCP)	Class - Trench (NRCP)	Class (NRCIPCP)	Minimum Wall Thickness (0) (NRCIPCP)	AASHTO M-294 Type C (CHDPEP)	AASHTO M-294 Type S (CHDPEP)	C-13.20 & C-13.25 Detail RD12 (End Treatment)	Size, (In.) Manhole Standard or Detail (Catch Basin, Manhole, Headwall & Junction Structure)	S-Single / D-Double	Location	H (0.0)	L Wing (0.0)	L 18" Slotted Drain (0) (Ft.)	L 24" Slotted Drain (0) (Ft.)	Type (Grate)	Elevation (0.00) (Grate)	Depth (Ft.)	L (0.0) (Ft.)	Inlet Depression C-15.70 (In.)	Pipe Excavation (0) (Cubic Yard)	Pipe Backfill (0) C-13.15 (Cubic Yard)	Drainage Excavation (0) (Cubic Yard)	Berm/Dike Embankment (0) (Cubic Yard)	REMARKS
81+31 to 81+56	SD1A	3		18	107													III						309	S	56' Rt.	6.3				311	2225.25			243	31			CB1A to CB2
81+56 to 83+83	SD1B	3		18	251												III	III						309	S	60' Rt.	3.0				311	2222.63			49	104			CB1B to CB2
80+49 to 81+56	SD2	3		18	121													III						309	S	53' Lt.	6.3				311	2224.85			78	8			CB2 to Outfall
82+22 to 83+88	SD3	1		24	162												III							309	S	53' Lt.	3.0				311	2222.69			0	80			CB3 to Trans. Str.
83+88 to 85+54	SD4	1		24	160												III	V						309	S	35' Lt.	4.5				311	2224.61			129	66			CB4 to CB3
85+54 to 88+29	SD5	1		24	278													III						309	S	35' Lt.	4.6				311	2226.00			105	29			CB5 to CB4
80+51 to 84+51	P1	1		2-36	880												II	II						RD08											1385	502	1635		See Sheet CD04
94+59 to 94+88	SD6	1	18		29		A	0.06					A	0.06	X								X												21	9			See Sheet SD03
Sheet Total																							2												2010	829	1635		

FILL HEIGHT RANGE TABLE (Ft.)													
RANGE NO.		1	2	3	4	5	6	7	8	9	10	11	12
FILL HEIGHT (Ft.)	>	1	3	5	8	11	15	20	25	30	40	55	70
	≤	3	5	8	11	15	20	25	30	40	55	70	90

◓ SHOULD FIELD CONDITIONS VARY FROM THE RANGE INDICATED, CONTACT DESIGN FOR RE-EVALUATION OF PIPE DESIGN REQUIREMENTS.

◪ PIPE CORRUGATION			
A	2⅔x½	D	6x2
B	3x1	E	3x1 or 9x2½
C	9x2½		

NEW CATCH BASIN SUMMARY

Catch Basin Number	Station (Sunset Rd. Const. ℄)	Offset	Type (Item No. 5030734)	Detail	"D" (0.0)	Diameter	Length	Direction	Diameter (Slotted Drain Left)	Length (Slotted Drain Left)	Direction (Slotted Drain Left)	Length (L) (Slotted Drain Right)	Elevation (Slotted Drain Right)	Type (Wing)	Elevation (Wing)	Elevation (Grate)	Diameter (Grate)	Direction (Grate)	Elevation (Inlet Pipe)	Diameter (Inlet Pipe)	Direction (Inlet Pipe)	Elevation (Inlet Pipe)	Diameter (Inlet Pipe)	Direction (Inlet Pipe)	Elevation (Inlet Pipe)	Diameter (Inlet Pipe)	Direction (Inlet Pipe)	Elevation (Outlet Pipe)	Diameter (Outlet Pipe)	Direction (Outlet Pipe)	Remarks and Notes	Sheet Number Reference	Catch Basin Number
CB1A	81+32	56' Rt.	4(S)	309	6.3									311	2225.25													2219.19	18	NE		SD01	CB1A
CB1B	83+83	60' Rt.	4(S)	309	3.0									311	2222.63													2219.61	18	NW		SD01	CB1B
CB2	81+56	53' Lt.	4(S)	309	6.3									311	2224.85	2218.86	18	SW	2218.86	18	SE							2218.66	18	NW		SD01	CB2
CB3	83+88	53' Lt.	4(S)	309	3.0									311	2222.69	2219.75	24	NE										2219.65	24	SW		SD02	CB3
CB4	85+54	35' Lt.	4(S)	309	4.5									311	2224.61	2220.33	24	NE										2220.23	24	SW		SD02	CB4
CB5	88+29	35' Lt.	4(S)	309	4.6									311	2226.00													2221.17	24	SW		SD02	CB5

Priscilla S. Cornelio, P.E., Director

No.	Revision Description	Engineer	Date

			Date
Designed	MPK		11/15
Drawn	MPK		11/15
Checked	CJR		11/15
Proj. Engr.	MPK		11/15

REV. DATE: 09-10-2004

SUNSET ROAD - SILVERBELL ROAD TO I-10 - PROJECT NO. 4RTSUN

Registered Professional Engineer (Civil) CERTIFICATE NO. 40599 MATTHEW P. KERSHNER STATE OF ARIZONA DATE SIGNED 11/13/15 EXPIRES 6-30-16

AECOM
TRANSPORTATION
AECOM USA, Inc.
4444 E. Broadway Blvd., SUITE 400
Tucson, Arizona 85705
T 520.887.1800 F 520.887.8438
www.aecom.com

CAD or paper copies not working copies
ARIZONA 811 BLUE STAKE, INC.
Call at least two full working days before you begin excavation
Web Service www.arizonabluestake.com

Pima County Department of Transportation

PIPE AND CATCH BASIN SUMMARY SHEET
SUNSET ROAD - SEGMENT I
SILVERBELL RD. TO I-10

PROJECT NO. 4RTSUN

Scale: N.T.S. | Sheet SB02 of SB02 | Page 08 of 203

FILE NAME: P:\60311412 Sunset Rd\900-Work\910-CAD\20-SHEETS\4RTSUN_summ_seg1.dgn DATE: 11/13/2015 TIME: 10:05:50 AM MurrietaR

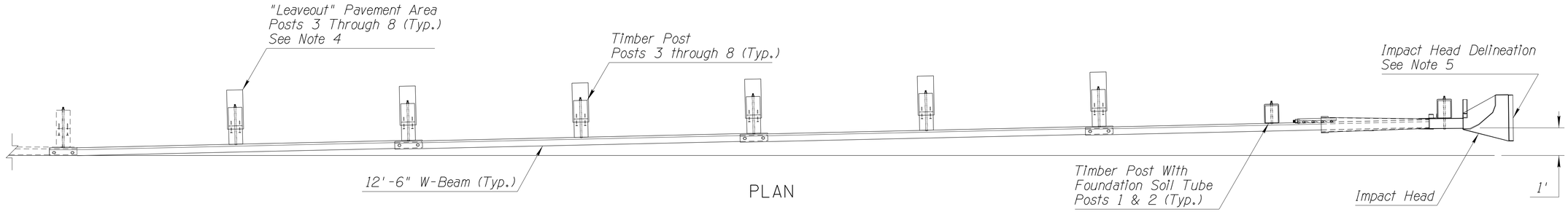

PLAN

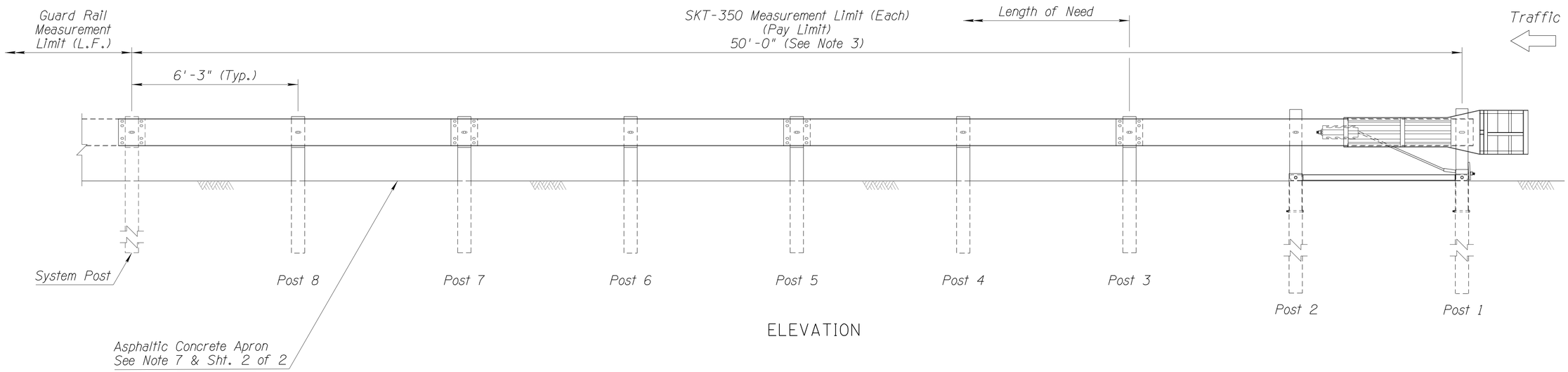

ELEVATION

NOTES:

1. This detail is for roadway layout only.
2. The SKT-350 shall be installed in accordance with the manufacturer's specifications and current approved drawings including all details, hardware, hardware quantities, and other information.

   The current manufacturer's approved drawing is number SKT-W-2US-AZ, 06/04/11. Visit the ADOT Roadway Design web site to view and print the drawing.
3. The 50' W-Beam length shall consist of four 12'-6" sections, the end section being a proprietary split rail.
4. "Leaveouts" in asphaltic concrete (AC) shall be provided in the AC pavement around the guard rail posts at the locations and dimensions specified on the manufacturer approved drawings. "Leaveout" material shall consist of a 1-sack grout mix or other non-cohesive material as approved by the Engineer.
5. See ADOT's Traffic Signing and Marking Standard Drawing M-34.
6. SKT-350 End Terminal shall be paid under Bid Item No. 9050020, Guard Rail Terminal (SKT 350).
7. Asphaltic concrete apron shall be paid under Bid Item No. 4060002, Asphaltic Concrete (No. 2).

DETAIL RD01

LAYOUT FOR SKT-350
2 FOUNDATION SOIL TUBES
(AC PAVEMENT)
SHEET 1 OF 2

Scale:	N.T.S.	Sheet RD01 of RD15	Page 09 of 203

Pima County Department of Transportation

Priscilla S. Cornelio, P.E., Director

		Date
Designed	MPK	11/15
Drawn	RM	11/15
Checked	CJR	11/15
Proj. Engr.	MPK	11/15

No.	Revision Description	Engineer	Date

Registered Professional Engineer (Civil) CERTIFICATE NO. 40980 MATTHEW P. KERSHNER DATE SIGNED 9/17/15 EXPIRES 6-30-16

AECOM

TRANSPORTATION

AECOM USA, Inc.
5151 W. Ironwood Hills Dr., SUITE 400
Tucson, Arizona 85743
T 520.887.1800 F 520.887.8438

www.aecom.com

ARIZONA 811 Call at least two full working days before you begin excavation

DETAIL SHEET
SUNSET ROAD - SEGMENT 1
SILVERBELL RD. TO I-10

PROJECT NO. 4RTSUN

SUNSET ROAD - SILVERBELL ROAD TO I-10 - PROJECT NO. 4RTSUN

FILE NAME: P:\60311412 Sunset Rd\900-Work\910-CAD\20-SHEETS\4RTSUN_rd01_1_seg1.dgn DATE: 11/13/2015 TIME: 10:06:15 AM MurrietaR

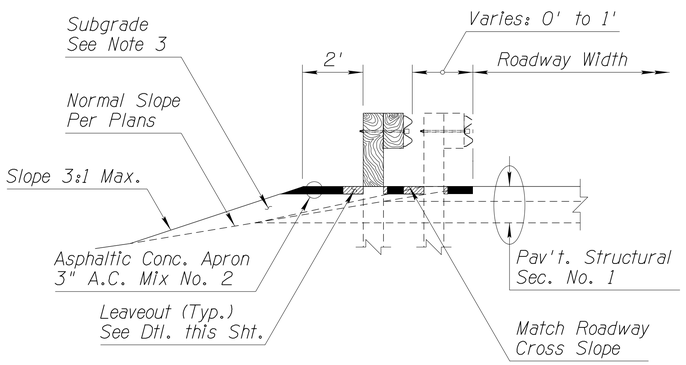

TYPE A SECTION

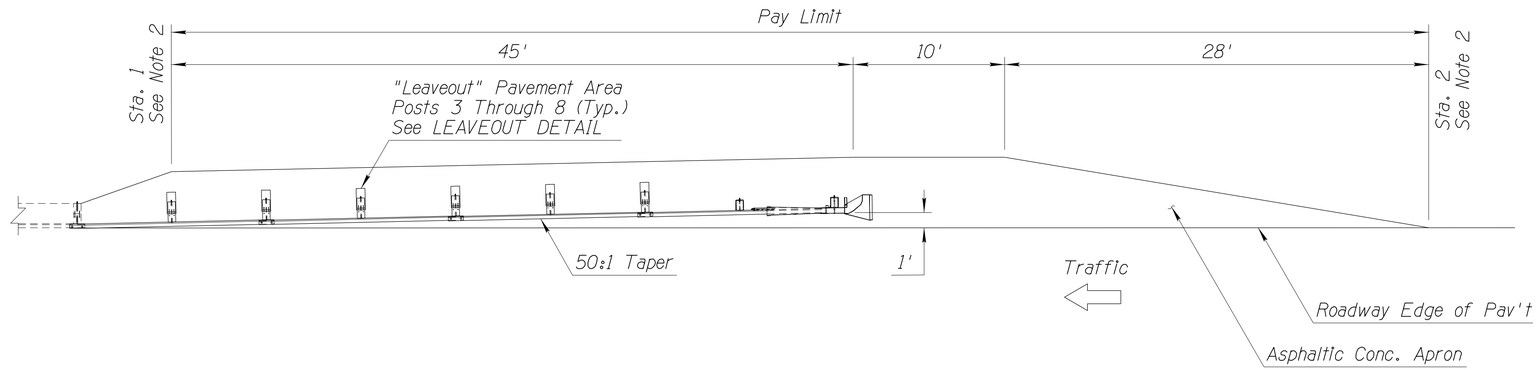

TYPE A GUARD RAIL INSTALLATION
(FACE OF RAIL AT EDGE OF PAVEMENT)

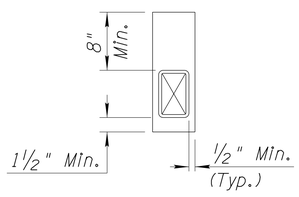

LEAVEOUT DETAIL

NOTES:

1. The control height for the guard rail system is 28" to the top of rail, measured at the face of rail from the normal finished shoulder elevation.
2. See Station Table this sheet for guard rail terminal apron locations.
3. See Section 203 of the Standard Specification for subgrade preparation.
4. SKT-350 End Terminal shall be paid under Bid Item No. 9050020, Guard Rail Terminal (SKT 350).
5. Asphaltic concrete apron shall be paid under Bid Item No. 4060002, Asphaltic Concrete (No. 2).

STATION TABLE

CONTROL LINE	STA. 1	STA. 2
Sunset Rd. Const. ℄	70+54.45, Rt.	69+71.45, Rt.
Sunset Rd. Const. ℄	79+22.48, Lt.	80+06.78, Lt.

DETAIL RD01

LAYOUT FOR SKT-350
2 FOUNDATION SOIL TUBES
(AC PAVEMENT)
SHEET 2 OF 2

Scale:	N.T.S.	Sheet RD02 of RD15	Page 10 of 203

Pima County Department of Transportation

Priscilla S. Cornelio, P.E., Director

Designed	MPK	Date 11/15
Drawn	RM	11/15
Checked	CJR	11/15
Proj. Engr.	MPK	11/15

No.	Revision Description	Engineer	Date

Registered Professional Engineer (Civil) CERTIFICATE NO. 40990 MATTHEW P. KERSHNER DATE SIGNED 11/13/15 EXPIRES 6-30-16

AECOM

TRANSPORTATION

AECOM USA, Inc.
4801 E. Broadway Blvd. SUITE 400
Tucson, Arizona 85705
T 520.887.7600 F 520.887.8438

www.aecom.com

ARIZONA 811 BLUE STAKE, INC.
Call at least two full working days before you begin excavation
Arizona Law requires 48 hours notice before excavation

DETAIL SHEET
SUNSET ROAD - SEGMENT 1
SILVERBELL RD. TO I-10

PROJECT NO. 4RTSUN

SUNSET ROAD - SILVERBELL ROAD TO I-10 - PROJECT NO. 4RTSUN

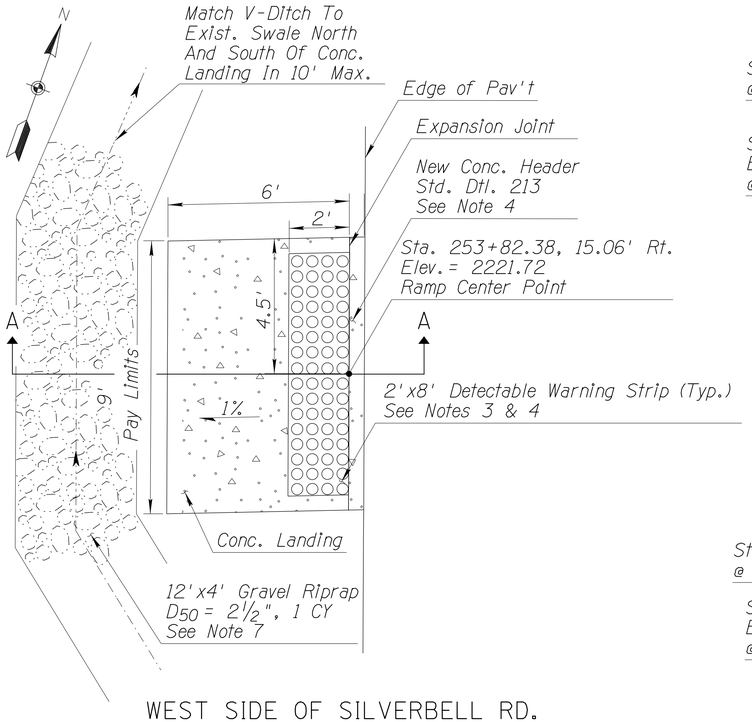

WEST SIDE OF SILVERBELL RD.

N.T.S.

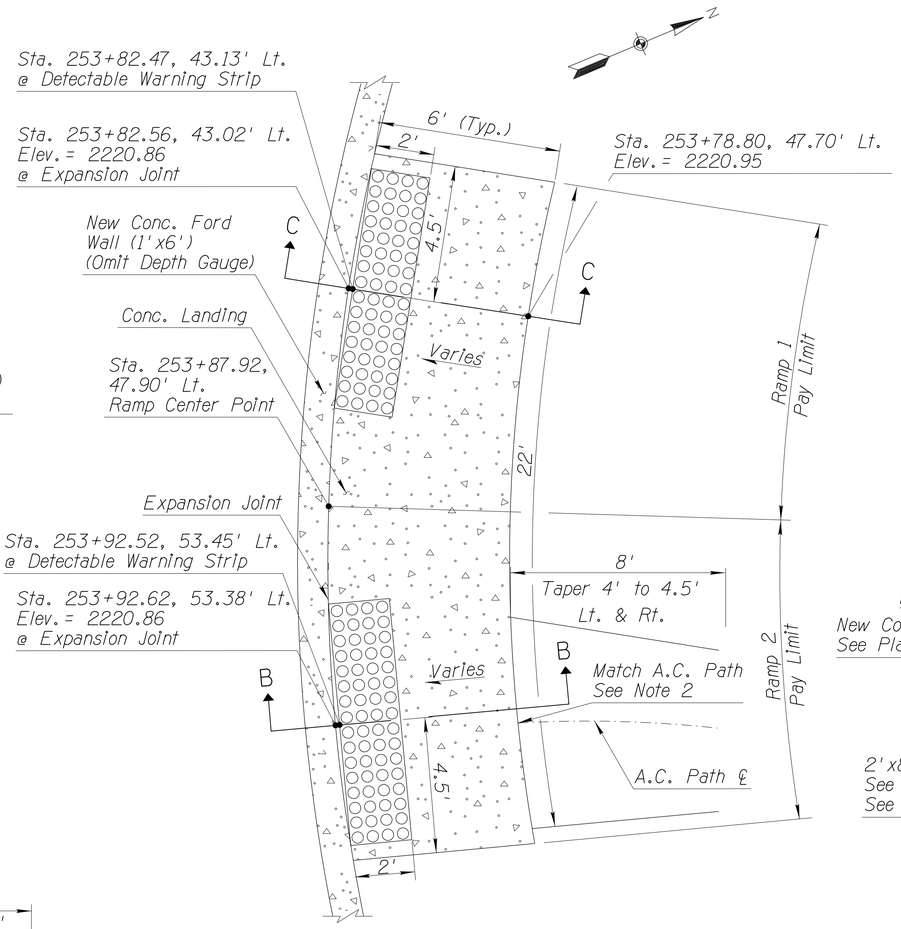

NORTHEAST CORNER
SILVERBELL RD./SUNSET RD. INTERSECTION

N.T.S.

NOTES:

1. All stations and offsets are referenced from the Silverbell Rd. Const. ℄.
2. See Staking Sheet ST01 for additional information.
3. See Std. Dtl. 207, Sheet 8 of 8 for detectable warning strip notes.
4. Concrete landing with detectable warning strip shall be paid under Bid Item No. 9080292, Concrete Landing With Detectable Warning Strip. The cost of the concrete header for the ramp on the west side of Silverbell Rd. is included in this bid item.
5. Concrete ford wall (1'x4') shall be paid under Bid Item No. 9080504, Concrete Ford Wall (1'x4').
6. Concrete ford wall (1'x6') shall be paid under Bid Item No. 9080506, Concrete Ford Wall (1'x6').
7. See Dtl. RD10 for the gravel riprap gradation and bid item number.

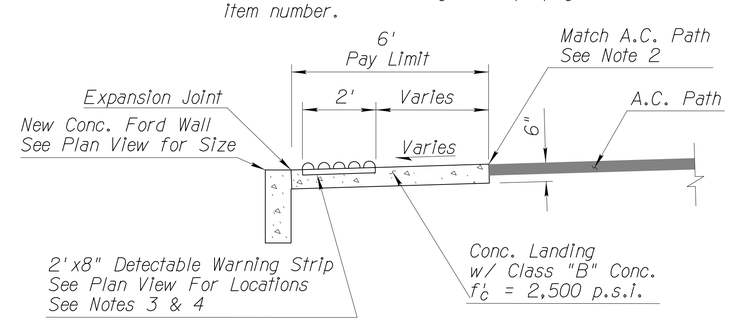

SECTION B-B

N.T.S.

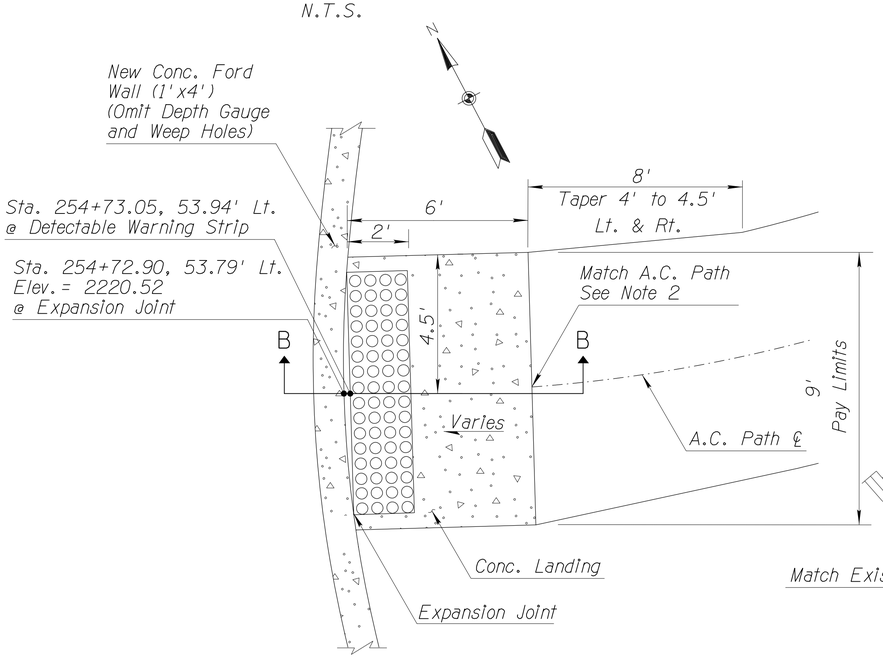

SOUTHEAST CORNER
SILVERBELL RD./SUNSET RD. INTERSECTION

N.T.S.

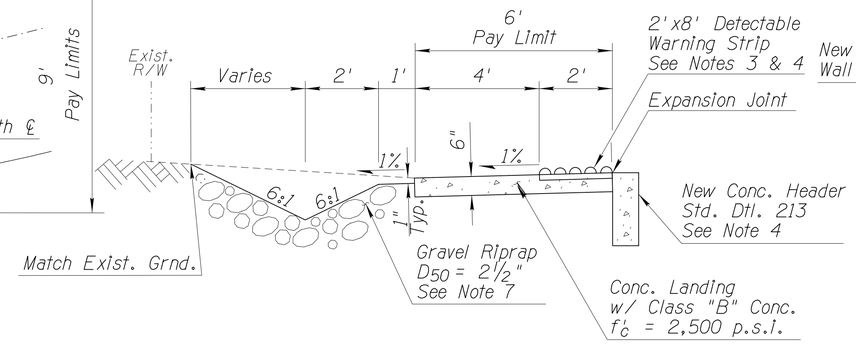

SECTION A-A

N.T.S.

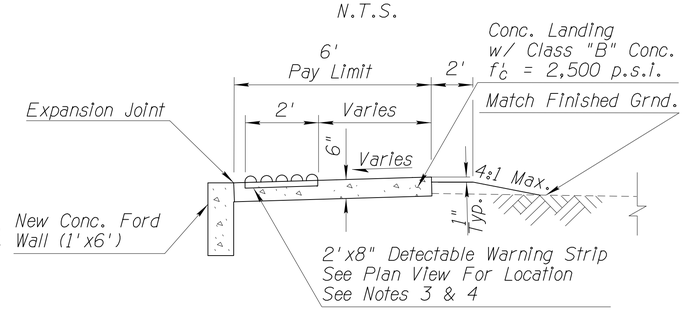

SECTION C-C

N.T.S.

DETAIL RD02

CONCRETE LANDING WITH DETECTABLE WARNING STRIP

Scale:	N.T.S.	Sheet RD03 of RD15	Page 11 of 203

Pima County Department of Transportation

Priscilla S. Cornelio, P.E. Director

No.	Revision Description	Engineer	Date

		Date
Designed	MPK	11/15
Drawn	RM	11/15
Checked	CJR	11/15
Proj. Engr.	MPK	11/15

Registered Professional Engineer (Civil) CERTIFICATE NO. 40950 MATTHEW P. KERSHNER DATE SIGNED 11/13/15 EXPIRES 6-30-16

AECOM

TRANSPORTATION

AECOM USA, Inc.
5151 E. Broadway Blvd., SUITE 400
Tucson, Arizona 85711
T 520.887.1800 F 520.887.8438
www.aecom.com

ARIZONA 811
Call at least two full working days before you begin excavation
Arizona Blue Stake, Inc.
Blue Stake, Inc. of New Mexico
1-8-811-ARIZONA (1-8-811-2966)

SUNSET ROAD - SILVERBELL ROAD TO I-10 - PROJECT NO. 4RTSUN

DETAIL SHEET
SUNSET ROAD - SEGMENT 1
SILVERBELL RD. TO I-10

PROJECT NO. 4RTSUN

FILE NAME: P:\60311412 Sunset Rd\900-Work\910-CAD\20-SHEETS\4RTSUN_rd02_segl.dgn DATE: 11/13/2015 TIME: 10:07:48 AM MurrietaR

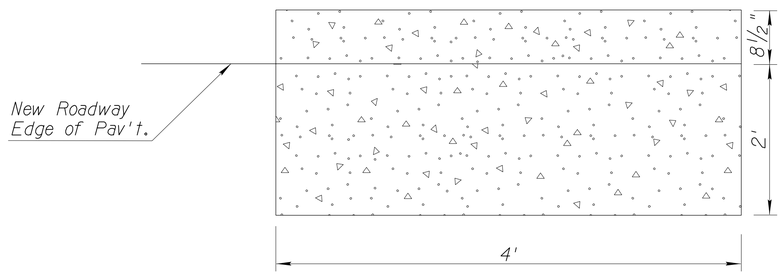

PLAN

NOTES:

1. See ADOT Std. Dwg. C-05.10 for general notes.
2. The concrete shall be Class "B" concrete, f'_c = 2,500 p.s.i.
3. Concrete curb and gutter terminal section will be paid for under Bid Item No. 9080092, Concrete Curb Terminal Section (C-05.10).

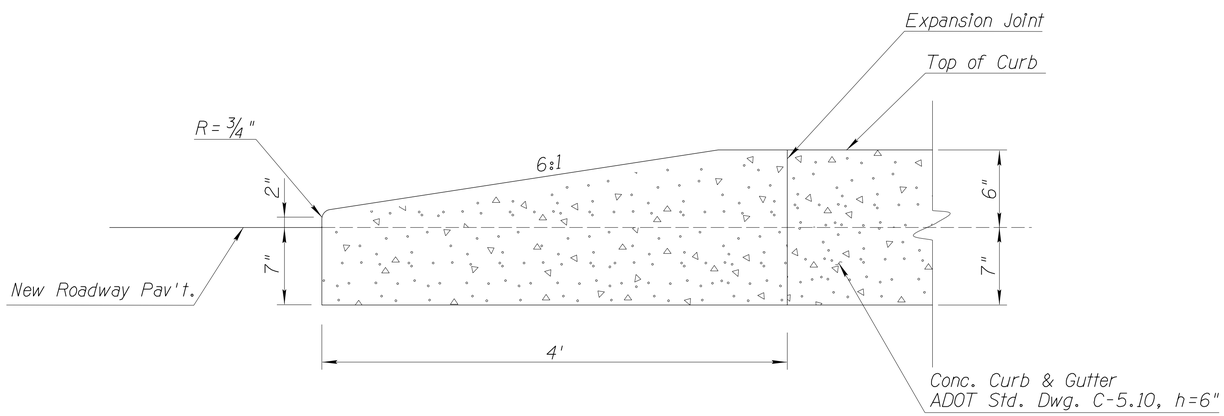

ELEVATION

DETAIL RD03

CONCRETE CURB & GUTTER
TERMINAL SECTION

Scale:	N.T.S.	Sheet RD04 of RD15	Page 12 of 203

Pima County Department of Transportation

Priscilla S. Cornelio, P.E., Director

	Designed	MPK	11/15
	Drawn	RM	11/15
	Checked	CJR	11/15
	Proj. Engr.	MPK	11/15

No.	Revision Description	Engineer	Date

CERTIFICATE OF Professional Engineer (Civil) 40980 MATTHEW P. KERSHNER Registered Arizona U.S.A. DATE SIGNED 11/13/15 EXPIRES 6-30-16

AECOM

TRANSPORTATION

AECOM USA, Inc.
5151 E. Broadway Blvd., SUITE 400
Tucson, Arizona 85705
T 520.887.1800 F 520.887.8438

www.aecom.com

CALL AT LEAST TWO full working days BEFORE YOU DIG
ARIZONA 811
Arizona Blue Stake, Inc.
Call Before You Dig 1-800-782-5348

DETAIL SHEET
SUNSET ROAD - SEGMENT 1
SILVERBELL RD. TO I-10

PROJECT NO. 4RTSUN

SUNSET ROAD - SILVERBELL ROAD TO I-10 - PROJECT NO. 4RTSUN

FILE NAME: P:\60311412 Sunset Rd\900-Work\910-CAD\20-SHEETS\4RTSUN_rd03_seg1.dgn DATE: 11/13/2015 TIME: 10:08:53 AM MurrietaR

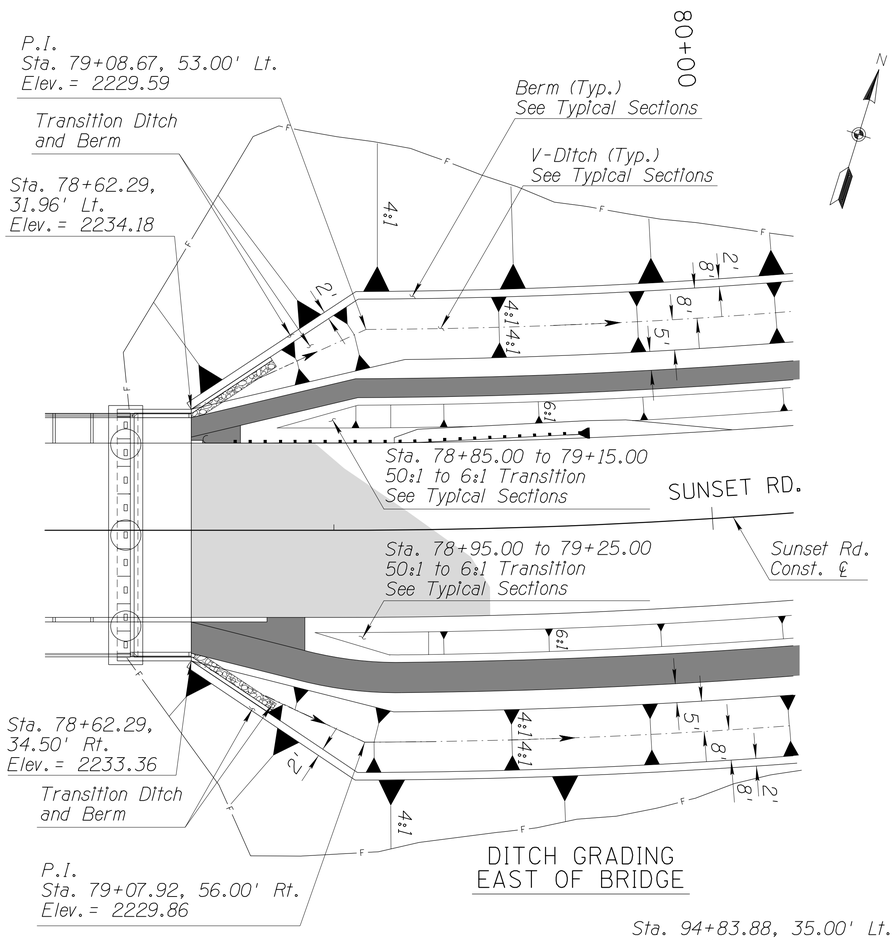

DITCH GRADING
EAST OF BRIDGE

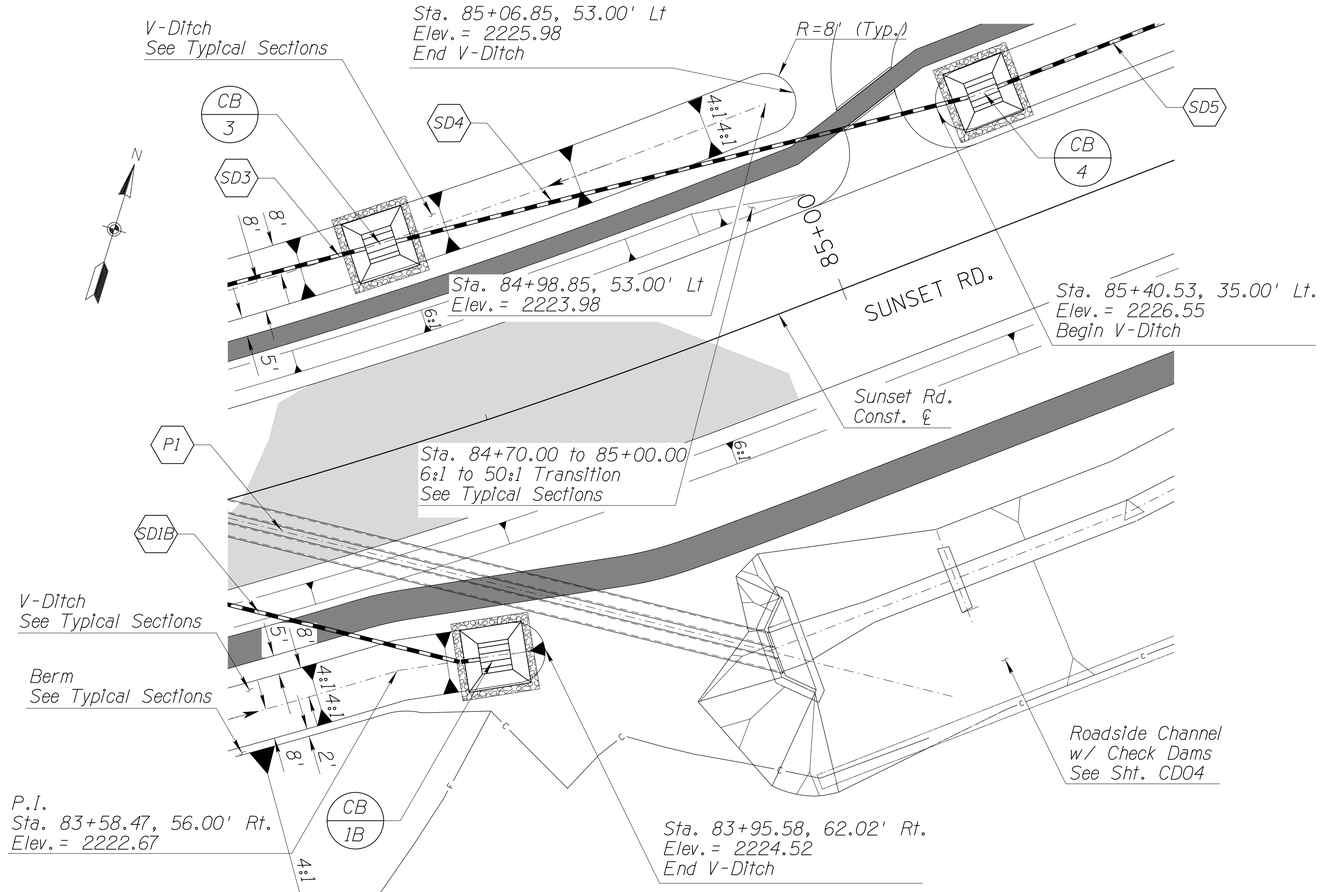

DITCH GRADING
END OF ROADSIDE DITCH
EAST OF GRAVEL PIT

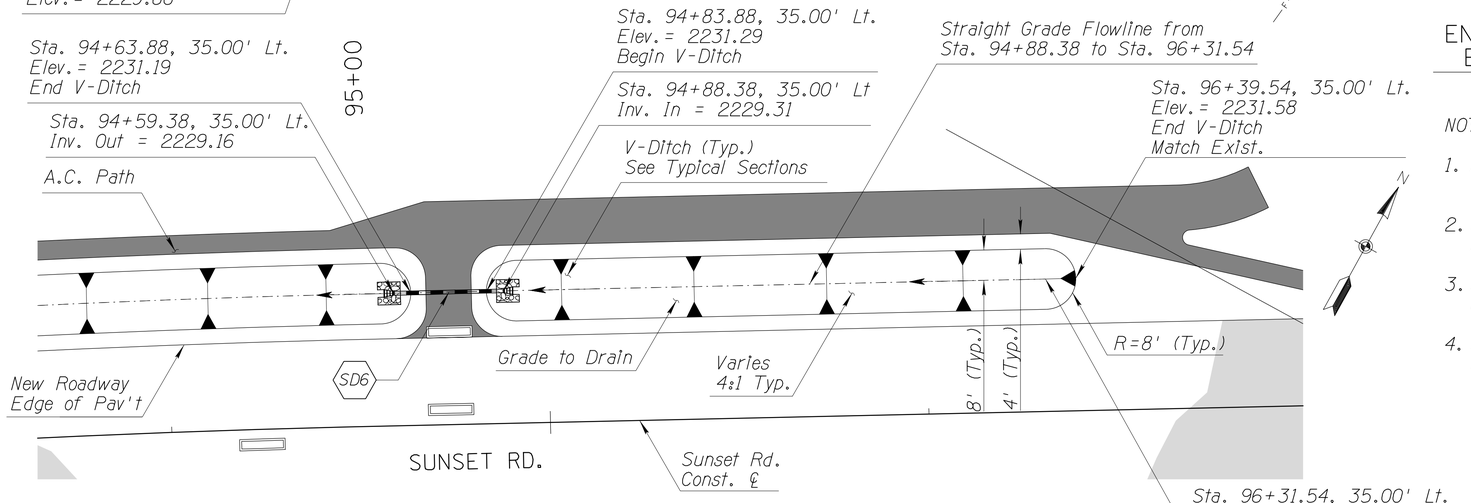

DITCH GRADING
WEST OF FRONTAGE ROAD

NOTES:

1. All stations and offsets are referenced from Sunset Rd. Const. ℄.
2. See Roadway and Staking Plan Sheets for A.C. Path staking information.
3. All work shown in this detail shall be paid under the respective earthwork pay items.
4. See Storm Drain Plan & Profile Sheets SD01 to SD03 for additional information.

DETAIL RD04

ROADSIDE DITCH GRADING

Priscilla S. Cornelio, P.E. Director

No.	Revision Description	Engineer	Date

		Date
Designed	MPK	11/15
Drawn	RM	11/15
Checked	CJR	11/15
Proj. Engr.	MPK	11/15

Registered Professional Engineer (Civil) CERTIFICATE NO. 40980 MATTHEW P. KERSHNER DATE SIGNED 11/13/15 EXPIRES 6-30-16

AECOM

TRANSPORTATION

AECOM USA, Inc.
5151 W. Ironwood Rd., SUITE 400
Tucson, Arizona 85705
T 520.887.1800 F 520.887.8438

www.aecom.com

ARIZONA811
Call at least two full working days before you begin excavation
Arizona Blue Stake, Inc.
Call Before You Dig!
Call 811 or 1-800-782-5348

Pima County Department of Transportation

DETAIL SHEET
SUNSET ROAD - SEGMENT 1
SILVERBELL RD. TO I-10

PROJECT NO. 4RTSUN

SUNSET ROAD - SILVERBELL ROAD TO I-10 - PROJECT NO. 4RTSUN

Scale:	1"=20'	Sheet RD05 of RD15	Page 13 of 203

FILE NAME: P:\60311412 Sunset Rd\900-Work\910-CAD\20-SHEETS\4RTSUN_rd04_segl.dgn DATE: 11/13/2015 TIME: 10:15:20 AM MurrietaR

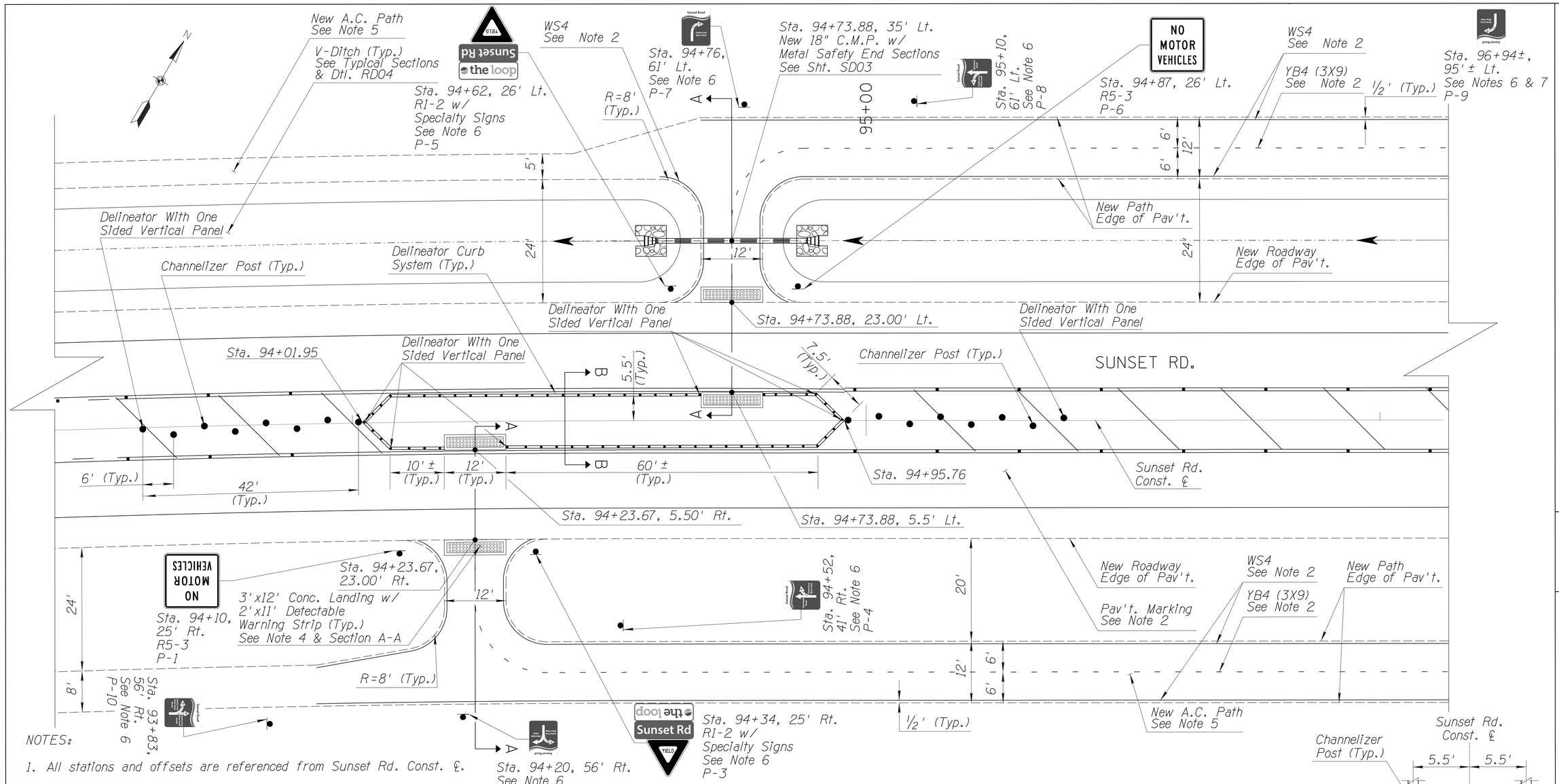

NOTES:

1. All stations and offsets are referenced from Sunset Rd. Const. ℄.
2. See Signing and Pavement Marking Plans for additional information.
3. Delineator curb system, channelizer posts and delineators with one sided vertical panels shall be installed in accordance with the manufacturer's specifications. See the Special Provisons for a brand type and name of a supplier. All work shall be paid under Bid Item No. 9300114, Miscellaneous Work 4, unless otherwise noted.
4. Concrete landing with detectable warning strip shall be paid under Bid Item No. 9080292, Concrete Landing With Detectable Warning Strip. See Std. Dtl. 207, Sheet 8 of 8 for detectable warning strip notes.
5. See Staking Sheet ST02 for additional information.
6. See Sign Format Sheet PM09 for additional information.
7. Signs along the existing path in conflict with the new path alignment shall be removed (2 total on the north side and 1 total on the south side).

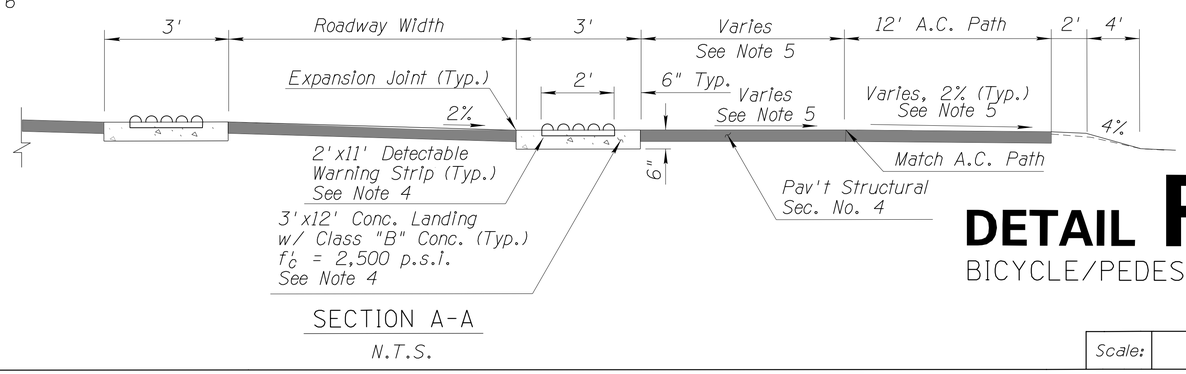

SECTION A-A

N.T.S.

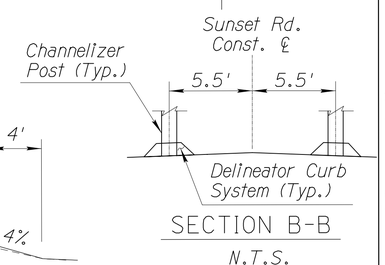

SECTION B-B

N.T.S.

DETAIL RD05

BICYCLE/PEDESTRIAN CROSSING

Priscilla S. Cornelio, P.E., Director

No.	Revision Description	Engineer	Date

		Date
Designed	MPK	11/15
Drawn	MPK	11/15
Checked	CJR	11/15
Proj. Engr.	MPK	11/15

Registered Professional Engineer (Civil) CERTIFICATE NO. 36000 MATTHEW P. KERSHNER DATE SIGNED 11/13/15 EXPIRES 6-30-16

AECOM

TRANSPORTATION

AECOM USA, Inc.
ASU WESTPARK BLVD, SUITE 400
Tucson, Arizona 85705
T 520.887.7600 F 520.887.8438

www.aecom.com

Pima County Department of Transportation

DETAIL SHEET
SUNSET ROAD - SEGMENT I
SILVERBELL RD. TO I-10

PROJECT NO. 4RTSUN

SUNSET ROAD - SILVERBELL ROAD TO I-10 - PROJECT NO. 4RTSUN

Scale:	1"=10'	Sheet RD06 of RD15	Page 14 of 203

FILE NAME: P:\60311412 Sunset Rd\900-Work\910-CAD\20-SHEETS\4RTSUN_rd05_segI.dgn DATE: 11/13/2015 TIME: 10:16:29 AM MurrietaR

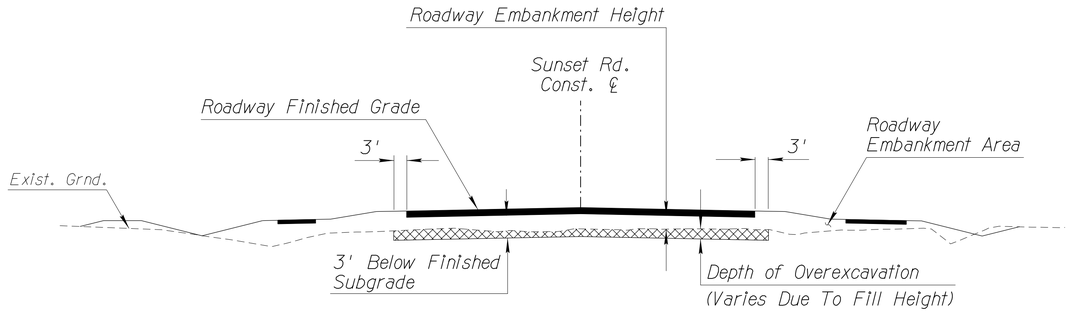

OVEREXCAVATION & RECOMPACTION
TYPICAL EMBANKMENT SECTION

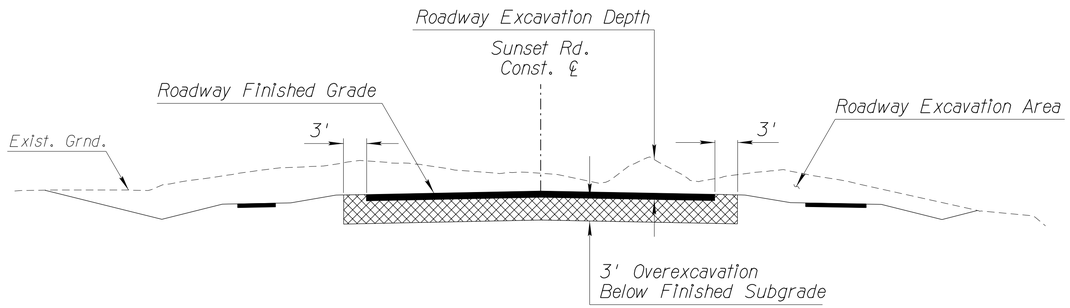

OVEREXCAVATION & RECOMPACTION
TYPICAL EXCAVATION SECTION

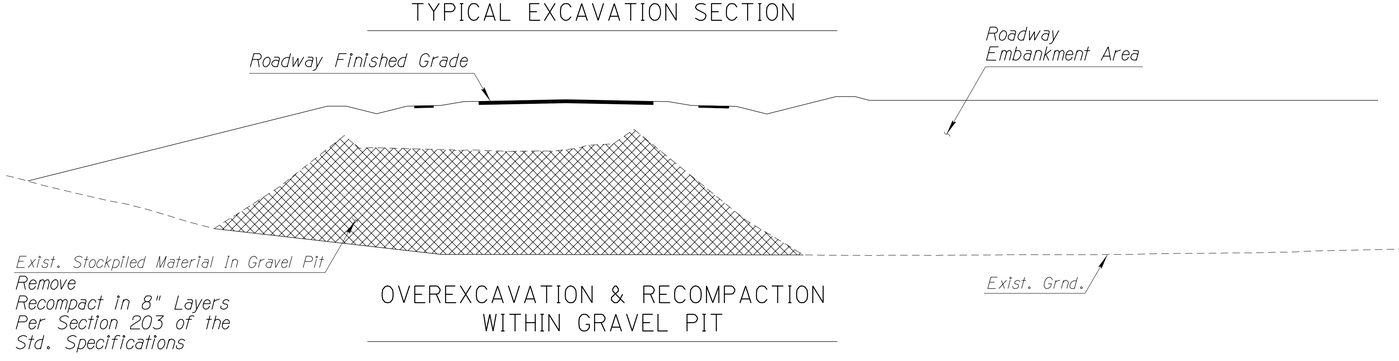

OVEREXCAVATION & RECOMPACTION
WITHIN GRAVEL PIT

OVEREXCAVATION & REMOVAL OR RECOMPACTION LIMITS

SUNSET RD. STATION	DEPTH OF OVEREXCAVATION	TREATMENT
Sta. 68+30.00 to 68+50.00	3'	Remove & Replace*
Sta. 68+50.00 to 69+00.00	Varies from 3' to 0'	Remove & Replace*
Sta. 80+00.00 to 81+00.00	Varies from 0' to 3'	Recompact
Sta. 81+00.00 to 85+00.00	Varies (Gravel Pit Stockpiled Material)	Recompact
Sta. 85+00.00 to 97+90.00	3'	Recompact

* Removed material shall be used as embankment in areas outside of the roadway prism only.

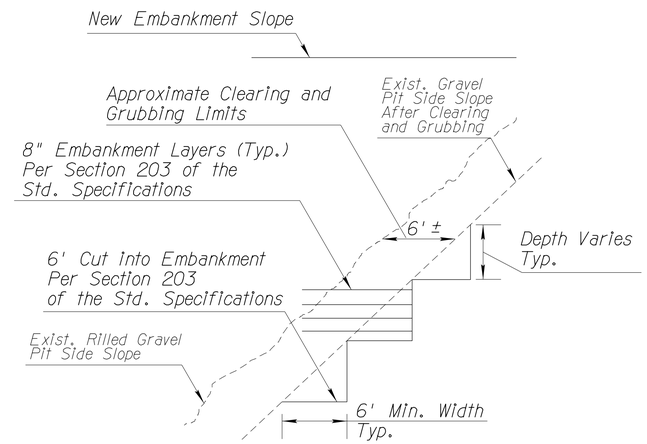

TYPICAL BENCHING
EXISTING GRAVEL PIT
EAST, WEST AND SOUTH SIDE SLOPES

NOTES:

1. All stations and offsets are referenced from the Sunset Rd. Const. ℄.
2. Roadway embankment heights greater than 3' above existing grade do not require overexcavation and recompaction with the exception of the stockpiled material in the gravel pit.
3. Total roadway embankment height plus overexcavation depth shall be 3' minimum.
4. The soil within the overexcavation zone shall be removed and recompacted. Recompaction of the soil within the limits of the overexcavation zone shall be performed to achieve at least 95% of the maximum dry density and within ±2% of the optimum moisture content as determined in accordance with Arizona Test Method 225 (Standard Proctor). The recompaction shall also comply with Section 203 and 205 of the Standard Specifications.
5. All work for overexcavation and recompaction shall be paid under Bid Item No. 2030502, Excavation (Overexcavation and Recompaction), unless otherwise noted.

LEGEND:

Overexcavation & Recompaction

DETAIL RD06

PAVEMENT SUBGRADE
OVEREXCAVATION AND
RECOMPACTION AND
GRAVEL PIT BACKFILL
SHEET 1 OF 2

Priscilla S. Cornelio, P.E., Director

			Date
Designed	MPK		11/15
Drawn	RM		11/15
Checked	CJR		11/15
Proj. Engr.	MPK		11/15

No.	Revision Description	Engineer	Date

Registered Professional Engineer (Civil) CERTIFICATE NO. 40599 MICHAEL P. KERSHNER DATE SIGNED 11/13/15 EXPIRES 6-30-16

AECOM
TRANSPORTATION
AECOM USA, Inc.
4201 N. Oracle Rd., SUITE 400
Tucson, Arizona 85705
T: 520.887.1800 F: 520.887.8438
www.aecom.com

ARIZONA811 BLUE STAKE, INC.
Call at least two full working days before you begin excavation
Web Service: www.azbluestake.com

Pima County Department of Transportation

DETAIL SHEET
SUNSET ROAD - SEGMENT 1
SILVERBELL RD. TO I-10

PROJECT NO. 4RTSUN

SUNSET ROAD - SILVERBELL ROAD TO I-10 - PROJECT NO. 4RTSUN

Scale:	N.T.S.	Sheet RD07 of RD15	Page 15 of 203

FILE NAME: P:\60311412 Sunset Rd\900-Work\910-CAD\20-SHEETS\4RTSUN_rd06_1_seg1.dgn DATE: 11/13/2015 TIME: 10:17:06 AM MurrietaR

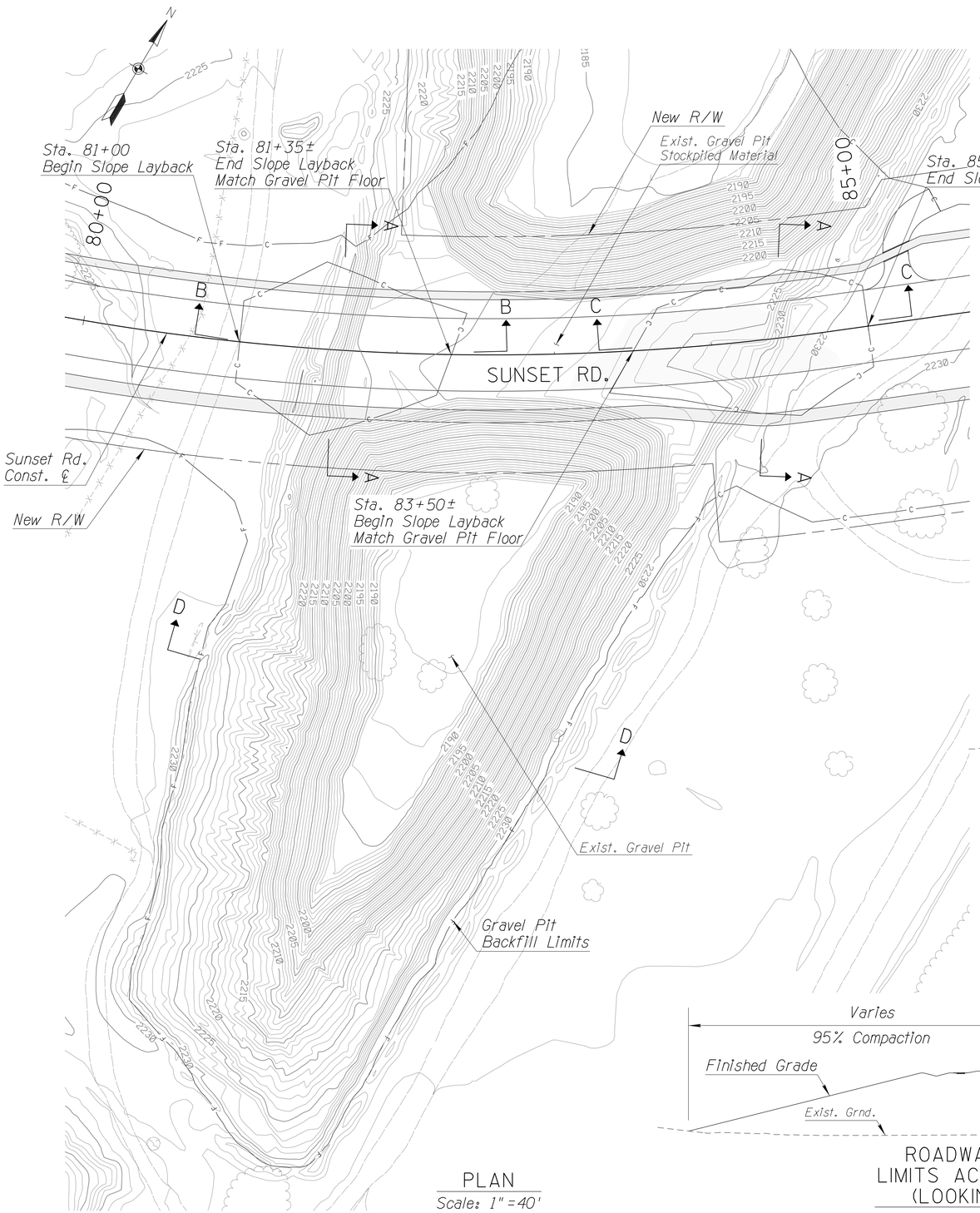

PLAN
Scale: 1" = 40'

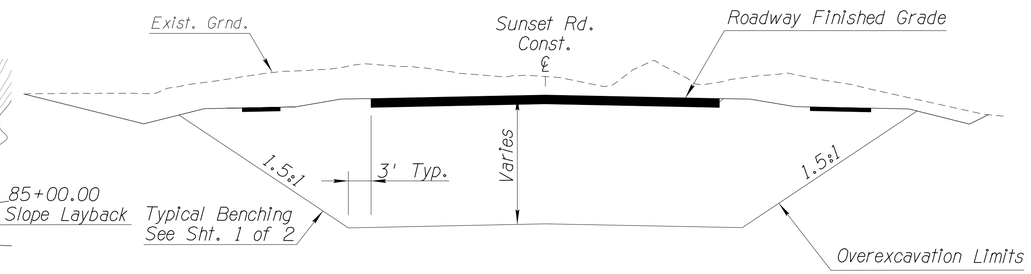

SECTION A-A
N.T.S.

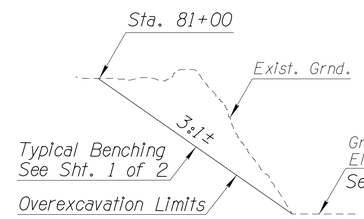

SECTION B-B
N.T.S.

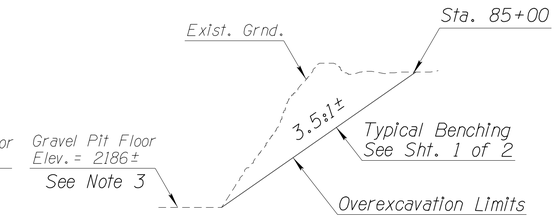

SECTION C-C
N.T.S.

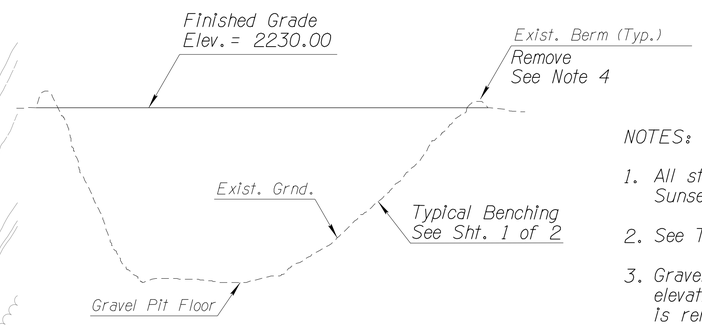

SECTION D-D
N.T.S.

NOTES:

1. All stations and offsets are referenced from Sunset Rd. Const. ℄.
2. See Typical Sections for additional information.
3. Gravel pit floor elevation shown represents elevation after gravel pit stockpiled material is removed.
4. There will be no separate payment for removal of berm as this is incidental to the earthwork pay items.

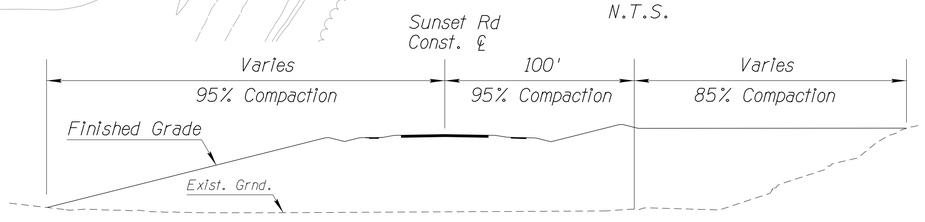

ROADWAY COMPACTION
LIMITS ACROSS GRAVEL PIT
(LOOKING UPSTATION)
N.T.S.

DETAIL RD06

PAVEMENT SUBGRADE
OVEREXCAVATION AND RECOMPACTION
AND GRAVEL PIT BACKFILL
SHEET 2 OF 2

Scale:	As Noted	Sheet RD08 of RD15	Page 16 of 203

Priscilla S. Cornelio, P.E., Director

		Date
Designed	MPK	11/15
Drawn	RM	11/15
Checked	CJR	11/15
Proj. Engr.	MPK	11/15

No.	Revision Description	Engineer	Date

Registered Professional Engineer (Civil) CERTIFICATE NO. 42990 MATTHEW P. KEPSINER STATE OF ARIZONA DATE EXPIRES 6-30-16

AECOM
TRANSPORTATION
AECOM USA, Inc.
4444 E. Broadway Blvd., SUITE 400
Tucson, Arizona 85705
T 520.887.7800 F 520.887.8438
www.aecom.com

ARIZONA 811 BLUE STAKE, INC.
CALL AT LEAST TWO FULL WORKING DAYS BEFORE YOU DIG
Arizona Law requires 2 days notice before excavation

Pima County Department of Transportation

DETAIL SHEET
SUNSET ROAD - SEGMENT 1
SILVERBELL RD. TO I-10

PROJECT NO. 4RTSUN

SUNSET ROAD - SILVERBELL ROAD TO I-10 - PROJECT NO. 4RTSUN

FILE NAME: P:\60311412 Sunset Rd\900-Work\910-CAD\20-SHEETS\4RTSUN_rd06_2_seg1.dgn DATE: 11/13/2015 TIME: 10:18:02 AM MurrietaR

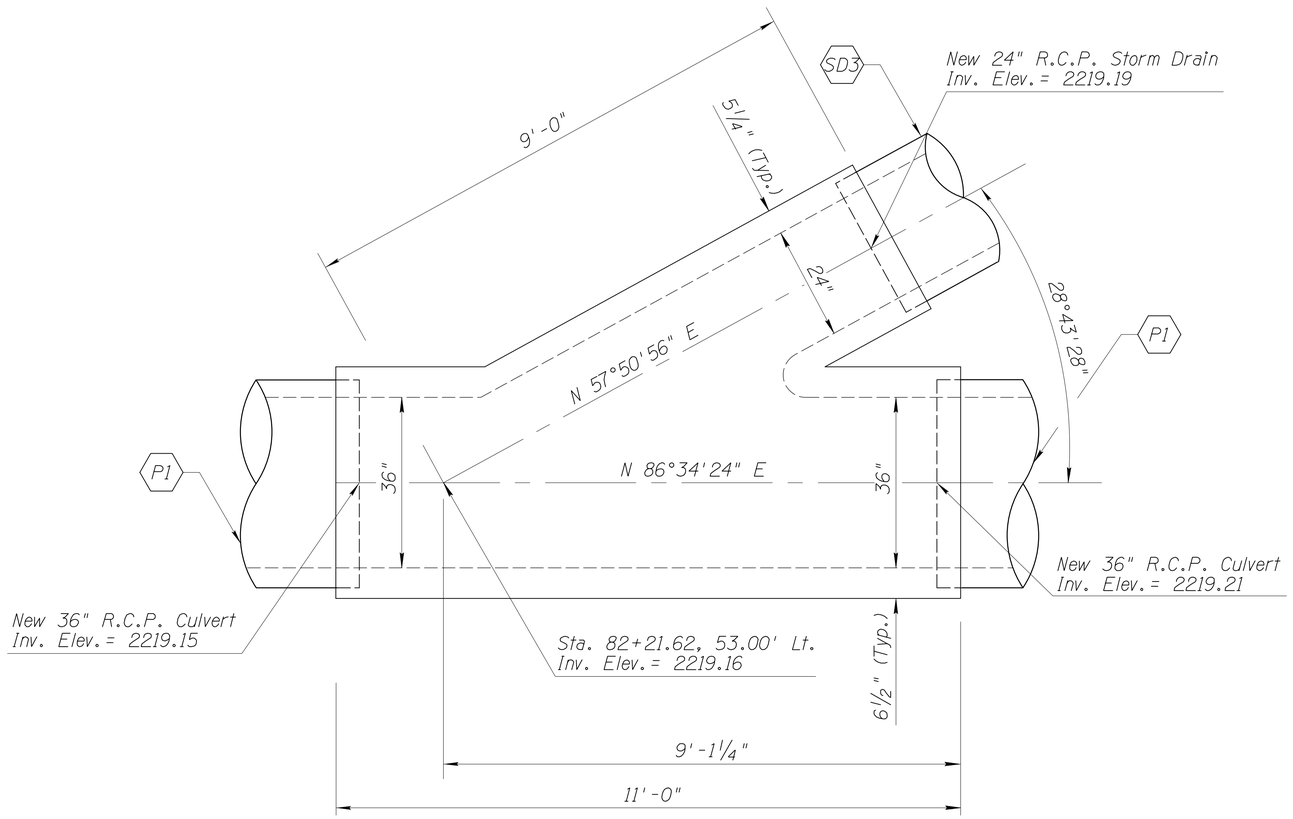

TRANSITION STRUCTURE
PLAN
N.T.S.

NOTES:

1. All stations and offsets are referenced from the Sunset Rd. Const. ℄.
2. See Std. Dtl. No. 312 for additional details, dimensions, and requirements.
3. The structural data on Sheet 3 of 4 of Std. Dtl. No. 312 for 24" & 36" diameter pipes shall be followed.
4. Pre-cast transition structure may be used upon approval by the Engineer.
5. The transition structure shall be paid for under Bid Item No. 5011499, Pipe, Transition Structure.
6. See Storm Drain Plan & Profile sheet for storm drain information.
7. See Culvert Plan & Profile sheet for culvert information.

DETAIL RD07
TRANSITION STRUCTURE

Priscilla S. Cornelio, P.E., Director

Designed	MPK	11/15
Drawn	RM	11/15
Checked	CJR	11/15
Proj. Engr.	MPK	11/15

No.	Revision Description	Engineer	Date

Registered Professional Engineer (Civil) CERTIFICATE NO. 40990 MATTHEW P. KERSHNER DATE SIGNED 9/17/15 EXPIRES 6-30-16

AECOM
TRANSPORTATION
AECOM USA, Inc.
2905 E. Skyline Dr., Ste. 400
Tucson, Arizona 85718
T 520.887.1800 F 520.887.8438
www.aecom.com

ARIZONA811 Call at least two full working days before you begin excavation. Arizona Blue Stake, Inc. 1-800-782-5348 (Outside Maricopa County) 602-263-1100 (Inside Maricopa County) www.azbluestake.com

Pima County Department of Transportation

DETAIL SHEET
SUNSET ROAD - SEGMENT 1
SILVERBELL RD. TO I-10

PROJECT NO. 4RTSUN

SUNSET ROAD - SILVERBELL ROAD TO I-10 - PROJECT NO. 4RTSUN

Scale:	N.T.S.	Sheet RD09 of RD15	Page 17 of 203

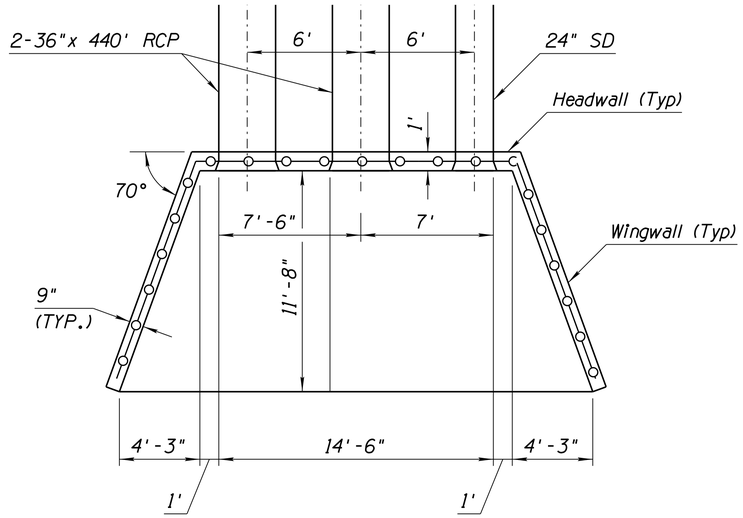

PLAN
OUTLET HEADWALL

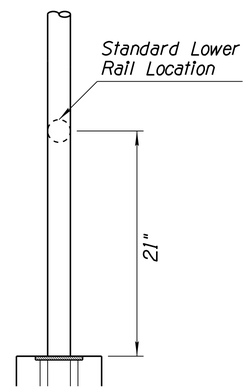

CROSS SECTION
HANDRAIL

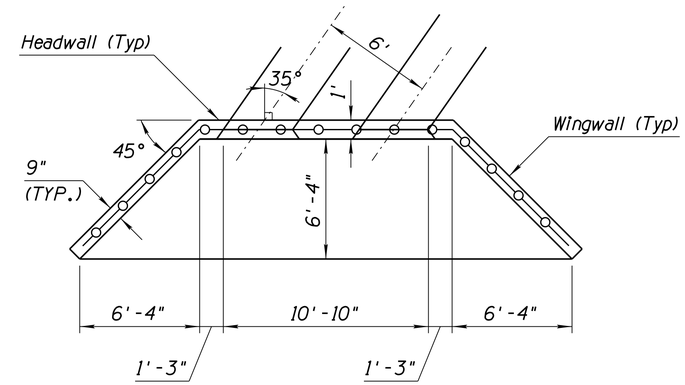

PLAN
INLET HEADWALL

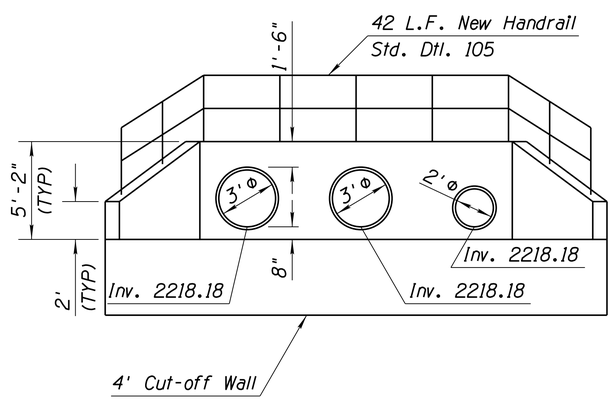

ELEVATION
OUTLET HEADWALL

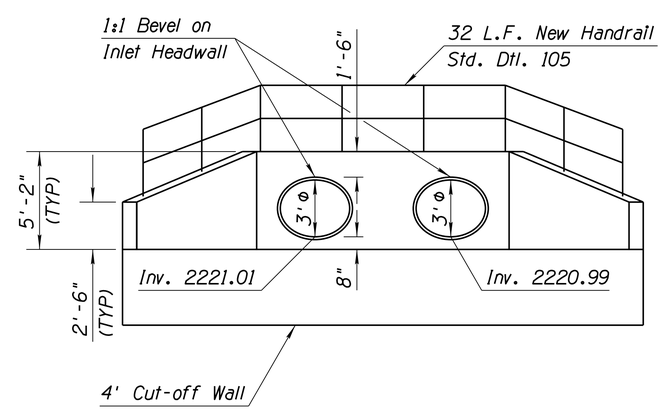

ELEVATION
INLET HEADWALL

NOTE:

For Information Not Provided On This Detail, Refer To ADOT Std. Dwg. SD 6.30.

Pipe Culvert Headwall W/ Wingwalls Shall Be Paid Under Bid Item No. 6016088.

Handrail (Std. Dtl. 105) (Standard Lower Rail Location) Shall Be Paid Under Bid Item No. 9330008.

DETAIL RD08

HEADWALL DETAIL

Scale:	N.T.S	Sheet RD10 of RD15	Page 18 of 203

Pima County Department of Transportation

Priscilla S. Cornelio, P.E., Director

Designed	GB	11/15
Drawn	CPC	11/15
Checked	JJK	11/15
Proj. Engr.	GB	11/15

No.	Revision Description	Engineer	Date

Registered Professional Engineer (Civil) CERTIFICATE NO. 37944 GREGORY ALLEN BAMBAUER Date Signed 09/30/2017 ARIZONA U.S.A. Expires 09/30/2017

PARSONS BRINCKERHOFF
177 N. CHURCH AVE., STE. 610
TUCSON, AZ. 85701
(520) 882-6424

Arizona Blue Stake 1-800-STAKE-IT (1-800-782-5348) Call at least two full business days before you dig

DETAIL SHEET
SUNSET ROAD - SEGMENT 1
SILVERBELL RD. TO I-10
PROJECT NO. 4RTSUN

SUNSET ROAD - SILVERBELL ROAD TO I-10 - PROJECT NO. 4RTSUN

FILE NAME: T:\11542C Sunset\Drainage\4RTSUN_rd08_seg1.dgn

Thu 12 Nov 2015, 16:50:49

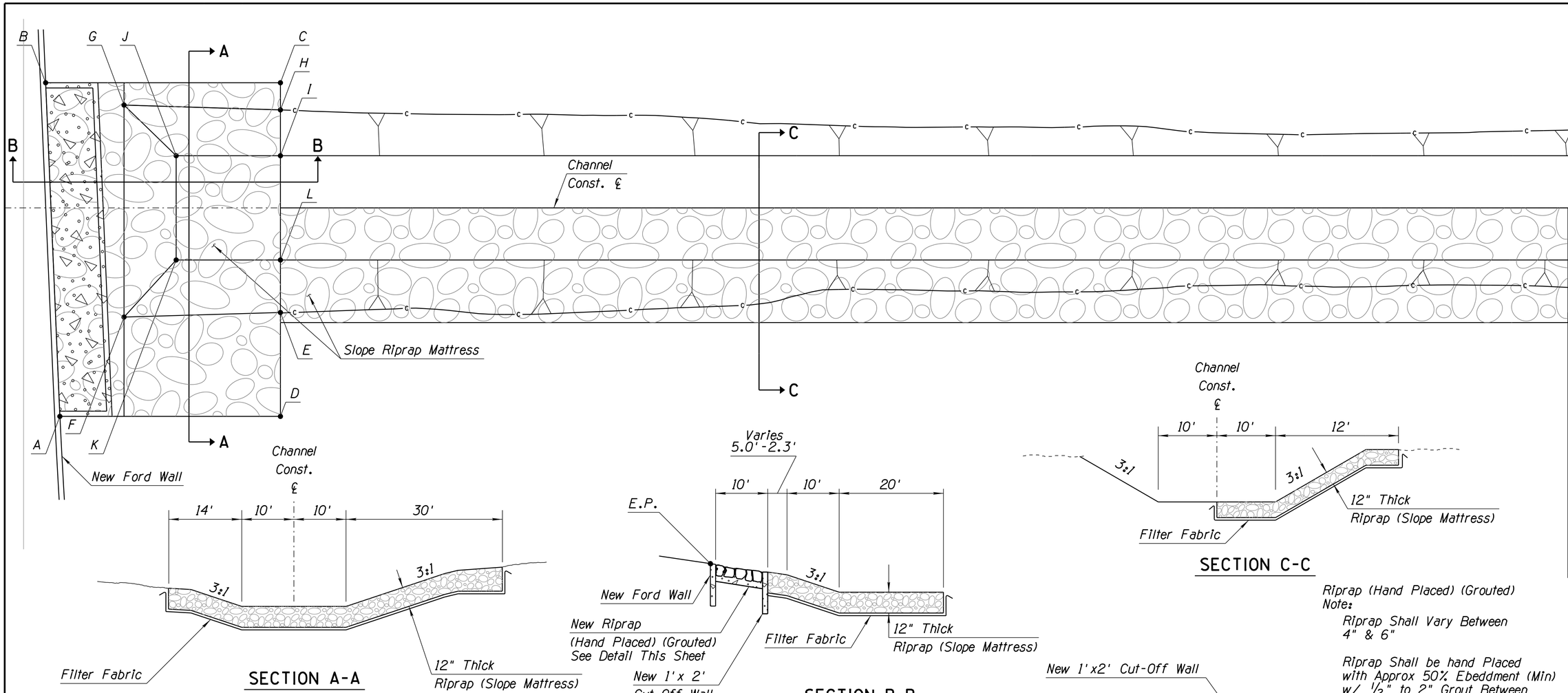

STAKING TABLE			
Point	Station	Offset	Elevation
A	10+43.7	40.0' Rt	2220.6±
B	10+41.0	24.0' Lt	2219.7±
C	10+86.0	24.0' Lt	2218.7±
D	10+86.0	40.0' Rt	2219.3±
E	10+86.0	20.1' Rt	2219.0±
F	10+56.0	21.0' Rt	2219.80
G	10+56.0	19.7' Lt	2219.40
H	10+86.0	18.8' Lt	2218.6±
I	10+86.0	10.0' Lt	2215.73
J	10+66.0	10.0' Lt	2215.83
K	10+66.0	10.0' Rt	2215.83
L	10+86.0	10.0' Rt	2215.73

Riprap (Slope Mattress) Note:

Size Of The Rock For The Riprap (Slope Mattress) Shall Be Well Graded With 70 Percent, By Weight, Exceeding 4 Inches, In Accordance With Section 913 Of The Standard Specifications.

Riprap (Slope Mattress) To Be Paid Under Bid Item No. 9130004.

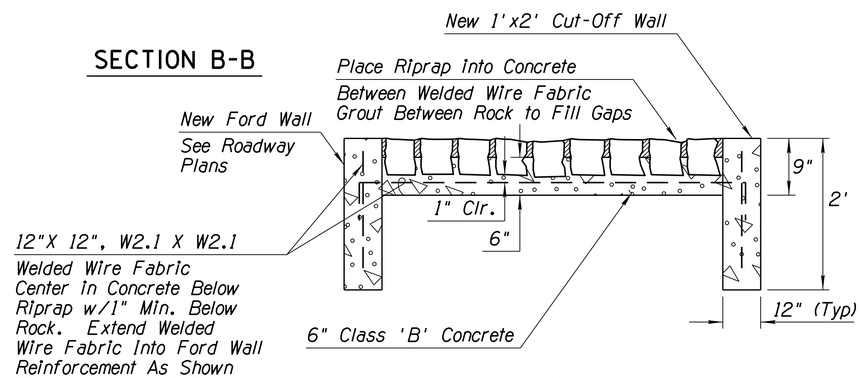

DETAIL

RIPRAP
(Hand Placed)
(Grouted)

Riprap (Hand Placed) (Grouted) Note:

Riprap Shall Vary Between 4" & 6"

Riprap Shall be hand Placed with Approx 50% Ebeddment (Min) w/ ½" to 2" Grout Between Rock with the Flat Surface Facing Up & Parallel To Finished Grade.

Concrete Shall be Class 'B'

Riprap (Hand Placed) (Grouted) will be Paid Under Bid Item No. 9130009.

1'x2'Cut-Off Wall Shall be Placed Around Perimeter of Riprap (Hand Placed) (Grouted). The 1'x2'Cut-Off Wall Shall be Included in the Unit Cost of the Riprap (Hand Placed) (Grouted).

DETAIL RD09

ROADSIDE CHANNEL

STA 255+55 Silverbell Road

Pima County Department of Transportation

Priscilla S. Cornelio, P.E., Director

		Date
Designed	GB	11/15
Drawn	CPC	11/15
Checked	JJK	11/15
Proj. Engr.	GB	11/15

No.	Revision Description	Engineer	Date

Registered Professional Engineer (Civil) CERTIFICATE NO. 37844 GREGORY ALLEN BAMBAUER Date Signed 11/12/15 ARIZONA U.S.A. Expires 09/30/2017

PARSONS BRINCKERHOFF
177 N. CHURCH AVE., STE. 610
TUCSON, AZ. 85701
(520) 882-6424

Arizona Blue Stake
1-800-STAKE-IT
1-800-782-5348
Call Arizona Law Requires 2 Working Days Before You Dig

DETAIL SHEET
SUNSET ROAD - SEGMENT I
SILVERBELL RD. TO I-10
PROJECT NO. 4RTSUN

SUNSET ROAD - SILVERBELL ROAD TO I-10 - PROJECT NO. 4RTSUN

Scale:	N.T.S	Sheet RD11 of RD15	Page 19 of 203

FILE NAME: T:\11542C Sunset\Drainage\4RTSUN_rd09_seg1.dgn

Thu 12 Nov 2015, 16:50:55

STAKING TABLE											
Station	Edge of Pavement		Point A		Point B		Point C		Point D		Water Surface
	Offset	Elevation	Offset	Elevation	Offset	Elevation	Offset	Elevation	Offset	Elevation	Elevation
84+98.5	23.0' Rt	2226.42	67.4' Rt	2224.65	79.1' Rt	2221.84	85.1' Rt	2221.84	119.1' Rt	2230.39	2224.12
85+01.5	23.0' Rt	2226.43	68.1' Rt	2224.65	79.1' Rt	2222.23	85.1' Rt	2222.23	119.1' Rt	2230.39	2224.75
85+50.0	23.0' Rt	2226.68	68.1' Rt	2224.90	79.1' Rt	2222.35	85.1' Rt	2222.35	118.7' Rt	2230.35	2224.78
86+00.0	23.0' Rt	2226.93	62.5' Rt	2225.26	74.1' Rt	2222.48	80.0' Rt	2222.48	112.6' Rt	2230.47	2224.81
86+48.5	23.0' Rt	2227.17	57.2' Rt	2225.60	69.2' Rt	2222.60	75.2' Rt	2222.60	107.9' Rt	2230.76	2224.84
86+51.5	23.0' Rt	2227.19	57.2' Rt	2225.59	69.2' Rt	2222.98	75.2' Rt	2222.98	108.1' Rt	2230.71	2225.51
87+00.0	23.0' Rt	2227.43	62.6' Rt	2225.77	74.3' Rt	2223.10	80.3' Rt	2223.10	118.9' Rt	2232.67	2225.72
87+50.0	23.0' Rt	2227.68	67.1' Rt	2225.92	79.3' Rt	2223.22	85.4' Rt	2223.22	122.0' Rt	2232.39	2225.88
87+98.5	23.0' Rt	2227.92	67.1' Rt	2226.16	84.2' Rt	2223.35	90.2' Rt	2223.35	122.0' Rt	2232.10	2226.02
88+01.5	23.0' Rt	2227.94	66.9' Rt	2226.19	83.9' Rt	2223.73	90.2' Rt	2223.73	122.0' Rt	2232.10	2226.06
88+50.0	23.0' Rt	2228.18	60.6' Rt	2226.52	78.1' Rt	2223.85	84.2' Rt	2223.85	118.0' Rt	2231.82	2226.25
89+00.0	23.0' Rt	2228.43	57.0' Rt	2226.83	75.0' Rt	2223.98	81.0' Rt	2223.98	121.0' Rt	2231.87	2226.39
89+48.5	23.0' Rt	2228.68	60.6' Rt	2227.04	78.1' Rt	2224.10	84.2' Rt	2224.10	122.0' Rt	2231.92	2226.51
89+51.5	23.0' Rt	2228.69	60.8' Rt	2227.04	78.4' Rt	2224.48	84.5' Rt	2224.48	122.0' Rt	2231.93	2226.56
90+00.0	23.0' Rt	2228.94	67.1' Rt	2227.18	84.1' Rt	2224.60	90.1' Rt	2224.60	121.2' Rt	2232.07	2226.73
90+50.0	23.0' Rt	2229.19	67.1' Rt	2227.43	84.3' Rt	2224.73	90.3' Rt	2224.73	121.1' Rt	2232.24	2226.85
90+98.5	23.0' Rt	2229.43	60.8' Rt	2227.78	78.3' Rt	2224.85	84.4' Rt	2224.85	120.2' Rt	2232.10	2226.94
91+01.5	23.0' Rt	2229.45	60.5' Rt	2227.80	78.1' Rt	2225.23	84.1' Rt	2225.23	119.7' Rt	2232.09	2227.01
91+50.0	23.0' Rt	2229.69	57.2' Rt	2228.10	75.2' Rt	2225.35	81.2' Rt	2225.35	108.1' Rt	2231.86	2227.13
92+00.0	23.0' Rt	2229.94	60.7' Rt	2228.29	78.2' Rt	2225.48	84.2' Rt	2225.48	111.1' Rt	2232.17	2227.21
92+48.5	23.0' Rt	2230.18	66.9' Rt	2228.43	83.8' Rt	2225.60	89.8' Rt	2225.60	116.7' Rt	2232.26	2227.25
92+51.5	23.0' Rt	2230.20	67.1' Rt	2228.44	84.0' Rt	2225.98	90.0' Rt	2225.98	117.0' Rt	2232.33	2227.49
93+00.0	23.0' Rt	2230.44	67.1' Rt	2228.69	84.3' Rt	2226.10	92.4' Rt	2226.10	118.0' Rt	2232.34	2227.51
93+50.0	23.0' Rt	2230.69	66.1' Rt	2228.93	89.0' Rt	2226.23	97.0' Rt	2226.23	121.8' Rt	2232.42	2227.52
93+98.5	23.0' Rt	2230.94	72.8' Rt	2229.06	89.1' Rt	2226.35	97.1' Rt	2226.35	121.5' Rt	2232.57	2227.52
94+01.5	23.0' Rt	2230.95	73.1' Rt	2229.07	89.1' Rt	2226.73	97.1' Rt	2226.73	121.4' Rt	2232.58	2228.08
94+50.0	23.0' Rt	2231.20	72.9' Rt	2229.32	88.9' Rt	2226.85	96.9' Rt	2226.85	119.0' Rt	2232.16	2228.08
95+00.0	23.0' Rt	2231.45	67.0' Rt	2229.69	83.8' Rt	2226.98	91.8' Rt	2226.98	121.9' Rt	2232.34	2228.08
95+17.0	23.0' Rt	2231.53	63.6' Rt	2229.84	82.2' Rt	2227.02	90.1' Rt	2227.02	122.0' Rt	2232.26	2228.08
95+50.0	23.0' Rt	2231.64	57.0' Rt	2230.08	75.1' Rt	2227.11	92.0' Rt	2227.11	122.0' Rt	2232.83	2228.08
96+00.0	23.0' Rt	2231.70	57.0' Rt	2230.14	75.2' Rt	2227.23	92.0' Rt	2227.23	120.5' Rt	2232.26	2228.08
96+50.0	23.0' Rt	2231.64	64.0' Rt	2229.94	81.7' Rt	2227.36	97.7' Rt	2227.36	120.7' Rt	2232.76	N/A

GABION CHECK DAM TABLE				
Station	Gabion Length	Thickness	Qty	Elevation
	(ft)	(ft)	(CY)	(ft)
85+00	30	3	10	2223.35
86+50	30	3	10	2224.10
88+00	36	3	12	2224.85
89+50	33	3	11	2225.60
91+00	30	3	10	2226.35
92+50	24	3	8	2227.10
94+00	24	3	8	2227.85

GRADATION	
GRAVEL RIPRAP	
% Passing	Size (in)
100	3¾"
50-75	2½"
30-50	2"
10-20	1"

Gabion Check Dam Note:

Size Of The Rock For The Gabion Check Dams Shall Be Well Graded, Varying In Size From 4 To 8 Inches, In Accordance With Section 913 of The Standard Specifications.

Gabion Check Dams Shall Be Paid Under Bid Item No. 9130005, Riprap (Gabions).

Gravel Riprap Shall Be Paid Under Bid Item No. 9130001, Riprap (Dumped)

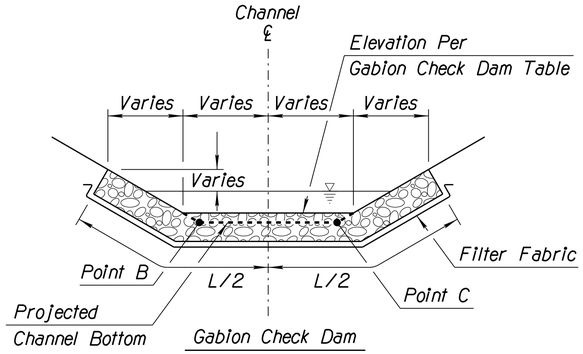

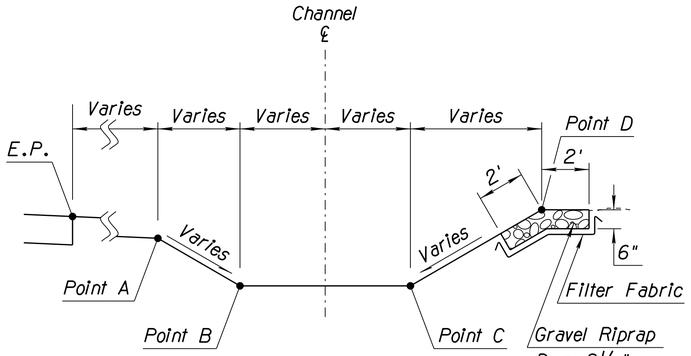

SECTION A-A

See Staking Table

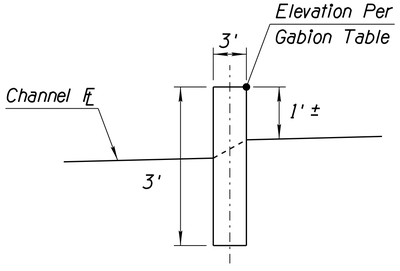

SECTION B-B

See Gabion Check Dam Table

DETAIL RD10

ROADSIDE CHANNEL

STA 84+98 TO STA 96+50

Scale: N.T.S | Sheet RD12 of RD15 | Page 20 of 203

Pima County Department of Transportation

Priscilla S. Cornelio, P.E., Director

No.	Revision Description	Engineer	Date

		Date
Designed	GB	11/15
Drawn	CPC	11/15
Checked	JJK	11/15
Proj. Engr.	GB	11/15

Registered Professional Engineer (Civil) CERTIFICATE NO. 37844 GREGORY A. LEN BAMBAUER Date Signed 11/12/15 ARIZONA U.S.A. Expires 09/30/2017

PARSONS BRINCKERHOFF
177 N. CHURCH AVE., STE. 610
TUCSON, AZ. 85701
(520) 882-6424

Arizona Blue Stake
1-800-STAKE-IT
1-800-782-5348
Call Before You Dig, Save Time, Trouble, Money

DETAIL SHEET
SUNSET ROAD - SEGMENT 1
SILVERBELL RD. TO I-10
PROJECT NO. 4RTSUN

SUNSET ROAD - SILVERBELL ROAD TO I-10 - PROJECT NO. 4RTSUN

FILE NAME: T:\11542C Sunset\Drainage\4RTSUN_rd10_seg1.dgn

Thu 12 Nov 2015, 16:51:00

STAKING TABLE			
	Station	Offset	Elevation
A	250+53.9	49.5' Lt	2218.38
B	250+78.9	49.5' Lt	2218.73
C	251+05.4	59.3' Lt	2215.59
D	251+21.7	59.3' Lt	2215.74
E	251+27.7	50.5' Lt	2218.63
F	251+81.7	50.5' Lt	2218.96
G	251+87.7	57.9' Lt	2216.53
H	251+99.7	57.9' Lt	2216.56
I	252+11.0	50.8' Lt	2219.05
J	252+65.4	50.8' Lt	2219.72

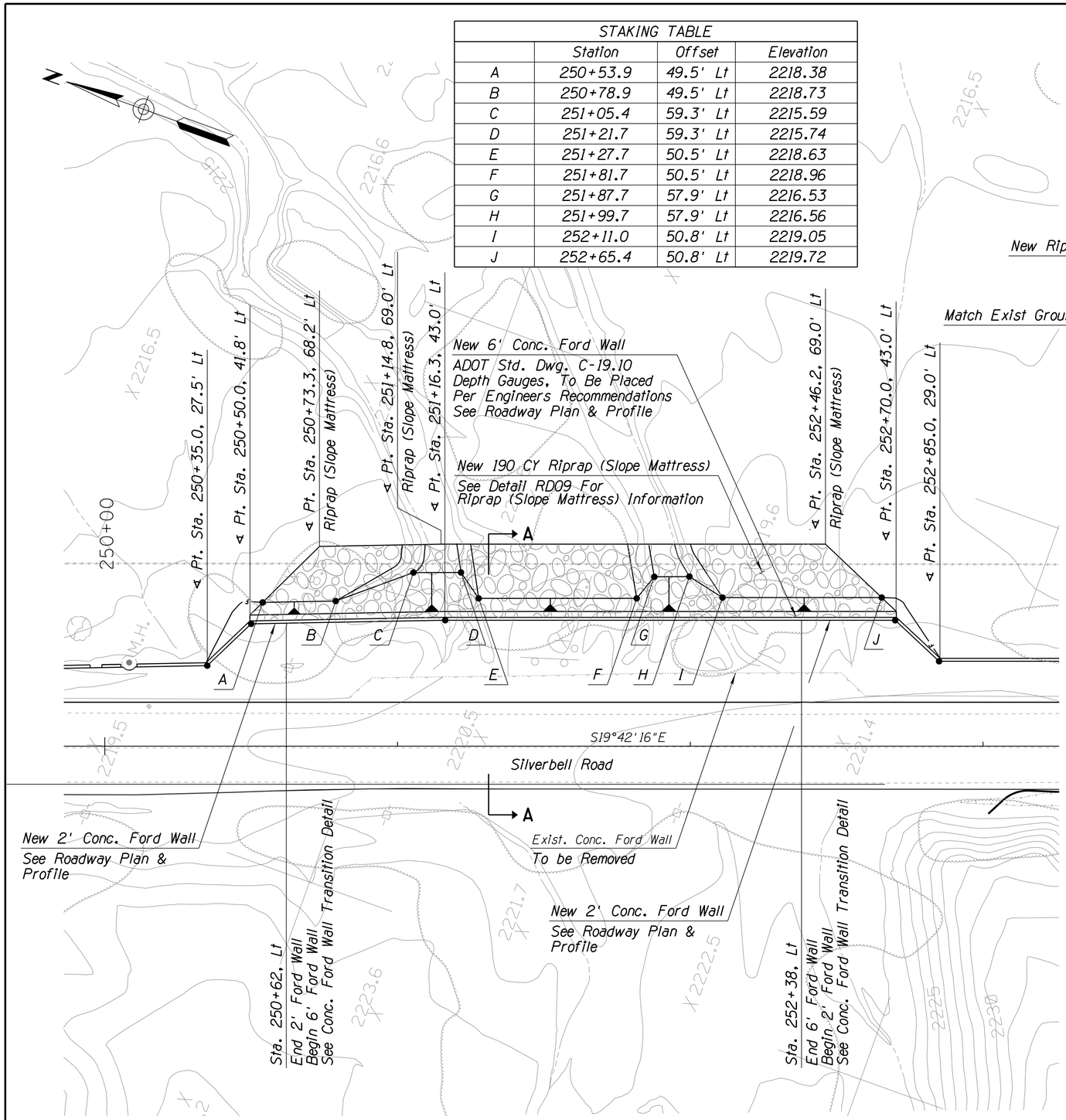

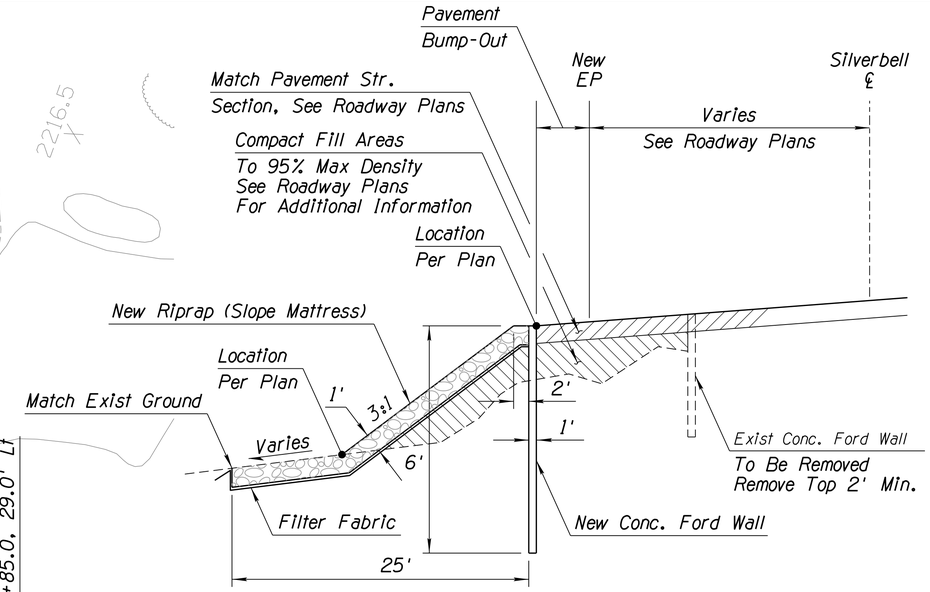

SECTION A-A

0.020'/ft

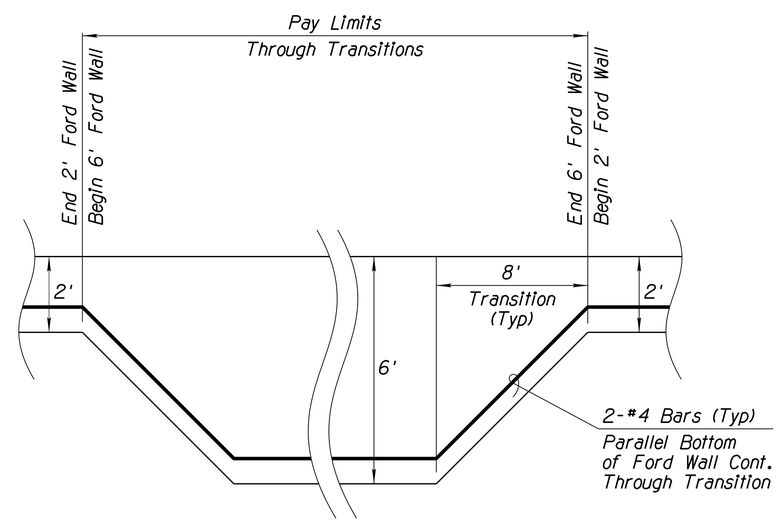

CONCRETE FORD WALL TRANSITON DETAIL

NOTE:

- Concrete Ford Wall Profile/Elevations See Roadway Plan & Profile
- For Additional Ford Wall Information See ADOT Std. Dwg. C-19.10
- Concrete Ford Wall (1'x 2') To Be Paid Under Bid Item No. 9080502
- Concrete Ford Wall (1'x 6') To Be Paid Under Bid Item No. 9080506

DETAIL RD11

SILVERBELL ROAD FORD WALL AND TRANSITION

Scale:	N.T.S.	Sheet RD13 of RD15	Page 21 of 203

Priscilla S. Cornelio, P.E., Director

		Date
Designed	GB	11/15
Drawn	CPC	11/15
Checked	JJK	11/15
Proj. Engr.	GB	11/15

No.	Revision Description	Engineer	Date

Registered Professional Engineer (Civil) CERTIFICATE NO. 37844 GREGORY ALLEN BAMBAUER Date Signed 11/13/15 ARIZONA U.S.A. Expires 09/30/2017

PARSONS BRINCKERHOFF
177 N. CHURCH AVE., STE. 610
TUCSON, AZ. 85701
(520) 882-6424

Arizona Blue Stake, Inc. 1-800-STAKE-IT (1-800-782-5348) Call 2 Working Days Before You Dig

Pima County Department of Transportation

DETAIL SHEET
SUNSET ROAD - SEGMENT I
SILVERBELL RD. TO I-10

PROJECT NO. 4RTSUN

SUNSET ROAD – SILVERBELL ROAD TO I-10 – PROJECT NO. 4RTSUN

FILE NAME: T:\11542C Sunset\Drainage\4RTSUN_rd11_seg1.dgn

Thu 12 Nov 2015, 16:51:09

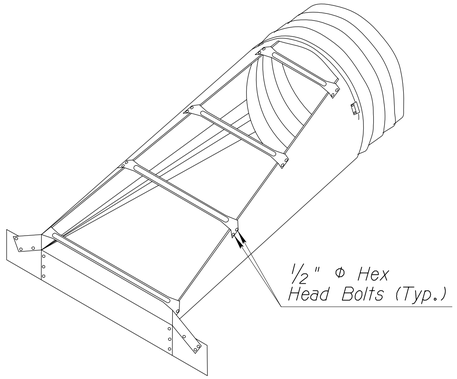

PARALLEL-DRAINAGE TYPE
END SECTION

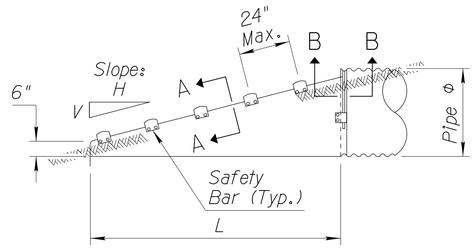

SIDE VIEW-PARALLEL DRAINAGE TYPE

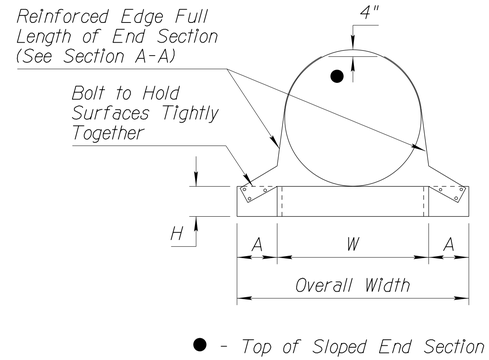

FRONT VIEW-ROUND PIPE

SAFETY BAR DETAIL

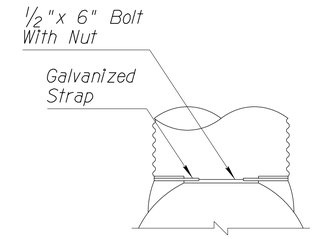

Circular Pipes 15"-24"

TYPE 1 CONNECTION

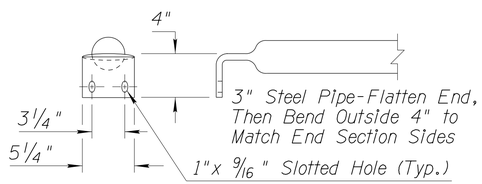

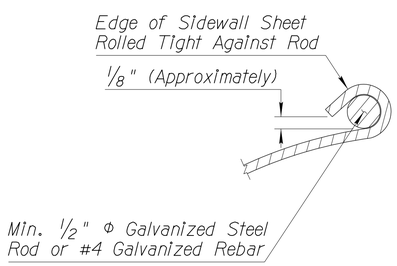

SECTION A-A

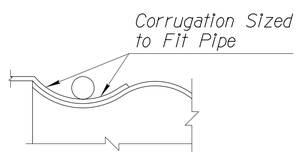

SECTION B-B

METAL END SECTION FOR CIRCULAR PIPES

PIPE DIAMETER (IN)	MINIMUM THICKNESS		DIMENSIONS (IN)				L DIMENSIONS					
	In	Gauge	A	H	W	Overall Width	Slope H:V	Length (In)	Slope H:V	Length (In)	Slope H:V	Length (In)
18	.064	16	8	6	24	40	4:1	32	6:1	48	10:1◪	100

◪ Minimum Thickness For All 10:1 Slope End Sections Is 12 Gauge

NOTE:

1. Metal safety end section will be paid under Bid Item No. 5014618, Metal Safety End Section (18").

DETAIL RD12

METAL SAFETY END SECTION

Priscilla S. Cornelio, P.E., Director

Designed	MPK		Date
Drawn	RM		11/15
Checked	CJR		11/15
Proj. Engr.	MPK		11/15

No.	Revision Description	Engineer	Date

Registered Professional Engineer (Civil) CERTIFICATE NO. 40590 MATTHEW P. KERSHNER STATE OF ARIZONA DATE SIGNED 11/13/15 EXPIRES 6-30-16

AECOM

TRANSPORTATION

AECOM USA, Inc.
4444 E. Broadway Blvd., SUITE 400
Tucson, Arizona 85705
T 520.887.7800 F 520.887.8438

www.aecom.com

Pima County Department of Transportation

DETAIL SHEET
SUNSET ROAD - SEGMENT 1
SILVERBELL RD. TO I-10

PROJECT NO. 4RTSUN

SUNSET ROAD - SILVERBELL ROAD TO I-10 - PROJECT NO. 4RTSUN

Scale:	N.T.S.	Sheet RD14 of RD15	Page 22 of 203

FILE NAME: P:\60311412 Sunset Rd\900-Work\910-CAD\20-SHEETS\4RTSUN_rd12_seg1.dgn DATE: 11/13/2015 TIME: 10:19:28 AM MurrietaR

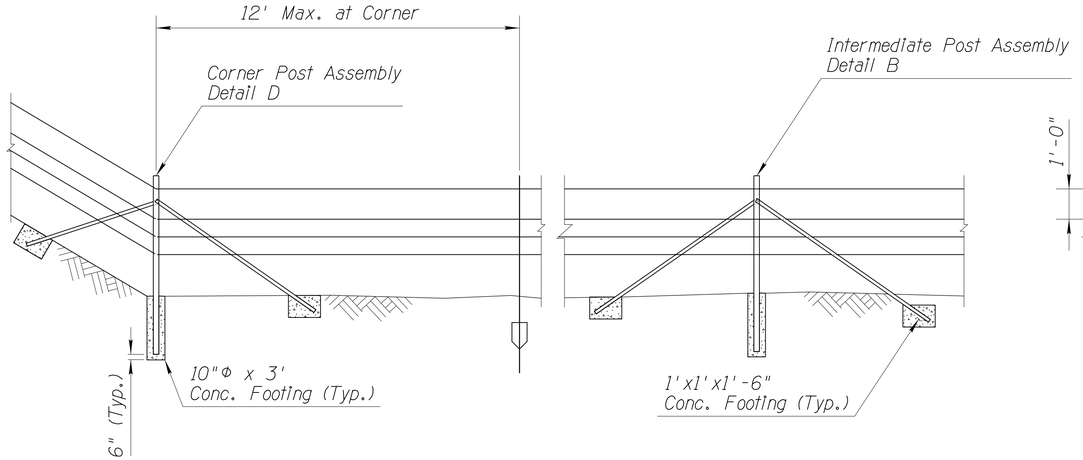

TYPICAL BARBED WIRE FENCE INSTALLATION-TYPE 2 (BW) SHOWN

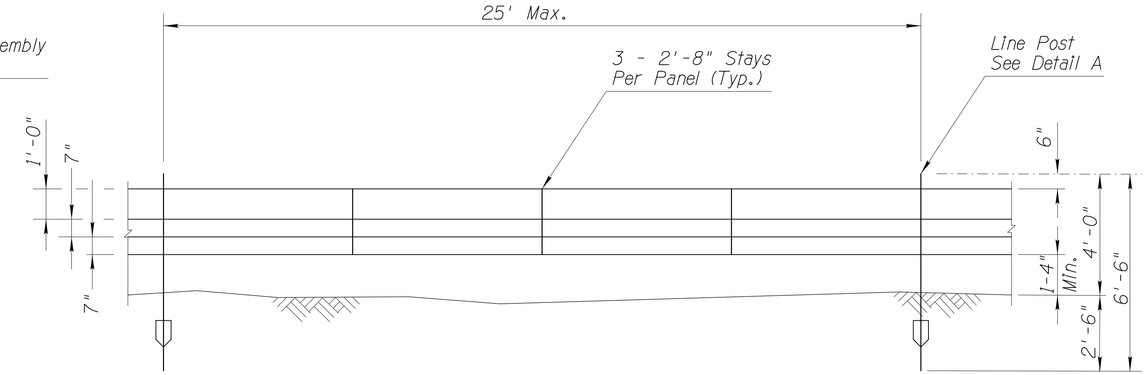

SMOOTH WIRE GAME FENCE (GF)

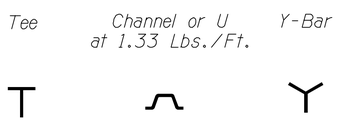

DETAIL A
TYPICAL CROSS SECTIONS
OF LINE POST SHAPES

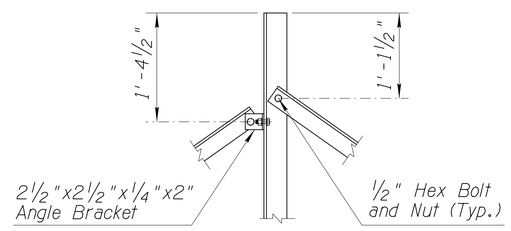

DETAIL B
INTERMEDIATE POST ASSEMBLY

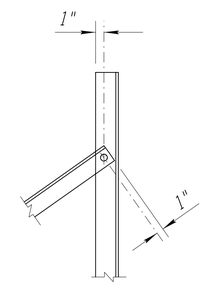

DETAIL C
END POST ASSEMBLY

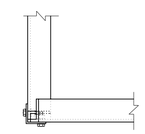

DETAIL D
CORNER POST ASSEMBLY

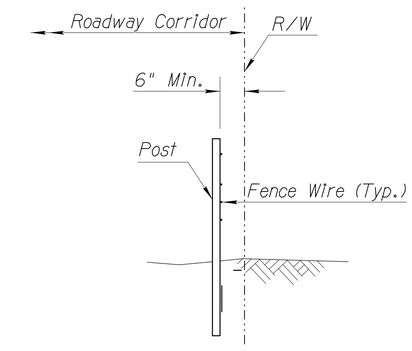

TYPICAL FENCE LOCATION

NOTES:

1. Intermediate post assemblies shall be located as shown and at intervals not to exceed 650', or midway between all braced posts.
2. All four wires shall be barbless.
3. The stays on game fence shall have their ends turned up to prevent injuries to game.
4. Fence wire shall be placed on the side of the line posts away from the main roadway except in sharper curve areas where it should be moved to the side with tension against the posts.
5. Smooth wire game fence to be paid under Bid Item No. 9030310, Fence (Special).
6. Post assemblies shall consist of an upright angle 2½"x2½"x¼" at 4.10 Lbs./ft. and brace angles 2"x2"x¼" at 3.19 Lbs./ft.

DETAIL RD13

SMOOTH WIRE GAME FENCE

Scale:	N.T.S.	Sheet RD15 of RD15	Page 23 of 203

Pima County Department of Transportation

Priscilla S. Cornelio, P.E., Director

Designed	MPK	11/15
Drawn	RM	11/15
Checked	CJR	11/15
Proj. Engr.	MPK	11/15

No.	Revision Description	Engineer	Date

Registered Professional Engineer (Civil) CERTIFICATE NO. 40990 MATTHEW P. KERSINER DATE SIGNED 11/13/15 EXPIRES 6-30-16

AECOM

TRANSPORTATION

AECOM USA, Inc.
ASLD, LICENSE NO. SUITE 400
Tucson, Arizona 85705
T 520.887.1600 F 520.887.8438

www.aecom.com

DETAIL SHEET
SUNSET ROAD - SEGMENT I
SILVERBELL RD. TO I-10

PROJECT NO. 4RTSUN

SUNSET ROAD - SILVERBELL ROAD TO I-10 - PROJECT NO. 4RTSUN

FILE NAME: P:\60311412 Sunset Rd\900-Work\910-CAD\20-SHEETS\4RTSUN_rd13_segI.dgn DATE: 11/13/2015 TIME: 10:19:50 AM MurrietaR

Found 2" B.C.S.M.
(N 1/4 Cor. Sec. 18)
N=77173.1870
E=66458.3730
Elev.= 2227.26

S 24°46'58" E

N89°41'06"E
2646.48'

Found Drilled Hole
In Concrete
(E 1/4 Cor. Sec. 7)
N=79846.0840
E=69101.7340

N0°3'59"W
2658.35'

S.L.

P.O.B. 244+74.07
N=76771.6462
E=67230.0493

245+00

1

P.T. 247+84.29
N=76484.6079
E=67341.4417

SILVERBELL RD.

S19°42'16"E

Silverbell Rd. Const. ℄ Sta. 254+24.87 =
Sunset Rd. Const. ℄ Sta. 67+96.43
N=75881.5406
E=67563.4225

250+00

70+00

N72°44'12"E

P.C. 255+90.41
N=75725.6931
E=67619.2373

255+00

2

Silverbell Rd.
Const. ℄

Sta. 259+32.77

P.T. 259+83.35
N=75379.0644
E=67801.5699

260+00

S35°47'09"E

100' WAPA Utility Esmt.
200' TEP Utility Esmt.

Tucson City Limits

P.O.E. 264+89.00
N=74968.8813
E=68097.2501

P.C. 264+89.14
N=74968.7699
E=68097.3304

S0°12'33"W
2633.02'

S.L.

S89°33'09"W
2653.98'

Found 1 1/2" A.C.P.
AKA Pima County
Geodetic Control
Point AL05
N=74527.8920
E=68810.1700

Found 1/2" Rebar
With Plastic Cap
"RLS 16097"
(E 1/4 Cor. Sec. 18)
N=74554.7340
E=69095.2040
Elev.= 2223.20

N89°24'09"E
2641.36'

75+00

SUNSET RD.

Pima County

Found Brass Stem
AKA Pima County
Geodetic Control
Point AJ05
(NE Cor. Sec. 18)
N=77187.7400
E=69104.8170
Elev.= 2229.71

80+00

Sta. 84+48.73

3

P.C. 79+01.80
N=76209.5743
E=68618.9995

Tucson City Limits

85+00

N51°28'55"E

P.T. 84+76.80
N=76477.0120
E=69124.2992

7 8
18 17

N89°17'42"E
2646.55'

P.C. 89+41.33
N=76766.3052
E=69487.7539

90+00

Sunset Rd.
Const. ℄

Sta. 97+37.16

4

P.T. 94+57.35
N=77058.5134
E=69912.5571

95+00

N59°28'21"E

Sunset Rd. Const. ℄
Sta. 100+00.00
@ I-10 Median ℄
N=77334.1530
E=70379.9881

I-10

100+00

UNION PACIFIC RAILROAD

Sunset Rd. Const. ℄
Sta. 101+64.02
N=77417.4687
E=70521.2752

S.L.

Found 3" B.C.S.M. In
Hand Hole "RLS 12537"
(N 1/4 Cor. Sec. 17)
N=77220.3030
E=71751.0990

S0°19'13"W
2638.07'

N89°24'09"E
2641.36'

Found 1 1/2" A.C.P.
"PE 1260"
(Center 1/4 Cor. Sec. 17)
N=74582.2820
E=71736.4210

N89°24'06"E
2630.80'

N

Found 1/2" Rebar No Tag
(Center of 1/4 Cor. Sec. 8)
N=79871.7560
E=71742.9100

S.L.

S0°10'39"E
2651.43'

RIVER RD.

CURVE DATA TABLE

CURVE	DELTA	RADIUS	LENGTH	TANGENT
1	5°04'42"	3500.00'	310.22'	155.21'
2	16°04'54"	1400.00'	392.95'	197.77'
3	21°15'18"	1550.00'	575.00'	290.84'
4	7°59'27"	3700.00'	516.02'	258.43'

200' 0 200' 400'
SCALE: 1"=200'

Priscilla S. Cornelio, P.E. Director

Designed	MPK	11/15
Drawn	RM	11/15
Checked	CJR	11/15
Proj. Engr.	MPK	11/15

No.	Revision Description	Engineer	Date

Registered Professional Engineer (Civil) CERTIFICATE NO. 33462 CHARLES J. ROBINSON DATE SIGNED 11/13/15 EXPIRES 3-31-2017

AECOM

TRANSPORTATION

AECOM USA, Inc.
4201 N. Oracle Rd., Suite 400
Tucson, Arizona 85705
T 520.887.1800 F 520.887.8438

www.aecom.com

Call at least two full working days before you dig in Arizona
ARIZONA 811
Arizona Blue Stake, Inc.
Not Member Utility Protection Service

Pima County Department of Transportation

HORIZONTAL CONTROL SHEET
SUNSET ROAD - SEGMENT 1
SILVERBELL RD. TO I-10

PROJECT NO. 4RTSUN

SUNSET ROAD - SILVERBELL ROAD TO I-10 - PROJECT NO. 4RTSUN

Scale: 1"=200' Horiz. | Sheet HC01 of HC01 | Page 24 of 203

FILE NAME: P:\60311412 Sunset Rd\900-Work\910-CAD\20-SHEETS\4RTSUN_hc01_seg1.dgn DATE: 11/13/2015 TIME: 11:29:34 AM MurrietaR

Preservation Fencing Notes:

1. Preservation Fencing shall be installed prior to mobilization. Contact Pima County DOT representative for location and placement of Fencing.

2. Signage to be placed on fencing along the south side of the roadway between the Santa Cruz River and I-10, every 100'.

PRESERVATION AREA

DO NOT ENTER

3. See Detail 7, LD02 for Preservation Fencing installation detail.

4. The Contractor shall notify all personnel that flow within the Santa Cruz River is reclaimed water from Pima County Wastewater Reclamation Facilities and is not for human consumption. Avoid direct contact with eyes, ears, nose or mouth.

5. No permanent loss is allowed in areas designated as jurisdictional waters or wetlands. No preservation fence installation activities within the designated jurisdictional waters or wetlands will be permitted.

6. Preservation fencing shall be maintained at all times and replaced, as needed, after storm events.

Cultural Resources Note:

Prior to the installation of the placement of the preservation fencing, the contractor shall contact Jerome Hesse at SWCA, (520) 325-9194, five working days prior to disturbance to arrange for archaeological monitoring of fence installation. All construction activities, equipment, vehicles, and personnel must be kept within the project area, the limits of which are identified by preservation fencing and the plans. Absolutely no work and no ground disturbing activities are allowed beyond the edge of the delineated project area. The Contractor shall assume all responsibility and liability for any encroachment beyond the extent of the delineated project area. The contractor is made aware that the areas adjacent to the delineated project area are highly sensitive and must be preserved. Any disturbance or damages beyond the delineated project area that is caused by the contractor or subcontractors on this project will be the liability and responsibility of the contractor. Mitigation of any disturbance or damage will be subject to county oversight and approval. All mitigation costs will be the responsibility of the contractor.

The use of private property for construction yards and staging will be allowed if zoning requirements allow its use for this purpose, and provided that all County environmental and cultural resources compliance requirements are concluded prior to such use.

Should any archaeological resources, human remains, or funerary objects be discovered during any stage of project implementation, all surface-disturbing activities in the area of discovery shall immediately cease and the Pima County Engineer shall be contacted, the Pima County Office of Sustainability and Conservation (520-724-6684) will be notified immediately, to arrange for proper assessment and treatment of the resources. State laws ARS 41-865 and ARS 41-844 require that the Arizona State Museum (520-621-4795) be notified of the discovery of human remains by the Contractor so that cultural groups who claim cultural or religious affinity to them can make appropriate arrangements for the repatriation and reburial of the remains. The human remains will be removed from the site by a professional archaeologist pending consultation and review by the Arizona State Museum and the concerned cultural groups. The work is subject to delay in that location pursuant to ARS 41-844 while an examination takes place.

Landscape Notes:

1. Site shall be treated for buffelgrass and other invasive species prior to initiation of work. See Special Provisions 201-3.04.

2. Contractor is responsible for the preservation of existing plant materials according to Special Provisions Section 201-3.02. Overhanging branches within the right of way that may impact construction shall be pruned in accordance with Special Provisions Section 201-3.05 and Item #8061700

3. Existing trees on adjacent private property may have overhanging branches that will require pruning. See Special Provisions 201-3.05. No pruning shall be performed without the notification of Pima County Community Relations.

4. Where construction impacts existing landscape or irrigation encroachments within right of way, contractor shall coordinate required adjustments with Project Engineer and adjacent property owners. See also Special Provisions, Item #2020004.

5. Contractor is to install preservation fencing as directed by engineer prior to clearing. Locations shown on plans shall be adjusted in the field as required. Preservation fencing is to remain during duration of project. See Item #20100004.

6. Removal of all cacti and native plants shall be in accordance with the provisions of the "Arizona Native Plant Law", A.R.S. Chapter 7. Cacti under the protection of native plant laws will have been removed prior to construction. If, during construction, additional saguaro or barrel cacti will be impacted, contractor is to contact Ellen Alster, PCDOT Senior Landscape Architect (520-724-6655 or Ellen.Alster@pima.gov). Contractor is to assist PCDOT in coordinating salvage by the Pima County Native Plant Nursery or the Tucson Cactus and Succulent Society (TCSS). Contact information: (520) 256-2447 or TCSS@TucsonCactus.org

Pima County Department of Transportation

Priscilla S. Cornelio, P.E., Director

No.	Revision Description	Engineer	Date

		Date
Designed	JWG	11/15
Drawn	JHS, NJL	11/15
Checked	CGP	11/15
Proj. Engr.	JAM	11/15

13221 JAMES K. GLOCK

Structural Grace, Inc

1420 E. Fort Lowell Rd., Ste. 200, Tucson, AZ 85719 (520) 320-0516

Call at least two full working days before you begin excavation. Arizona Blue Stake, Inc. ARIZONA811 Dial 8-1-1 or 1-800-STAKE-IT (782-5348) In Maricopa County: (602) 263-1100

PRESERVATION FENCING NOTES
SUNSET ROAD - SEGMENT 1
SILVERBELL RD. TO I-10

PROJECT NO. 4RTSUN

SUNSET ROAD - SILVERBELL ROAD TO I-10 - PROJECT NO. 4RTSUN

Scale:	As Noted	Sheet EN01 of EN03	Page 25 of 203

FILE NAME: W:\Jobs\2013\1326_Sunset\1326_Working\1326_Sunset_EN01_PF01.dgn DATE: 11/16/2015 TIME: 4:24:38 PM MLichtenstein

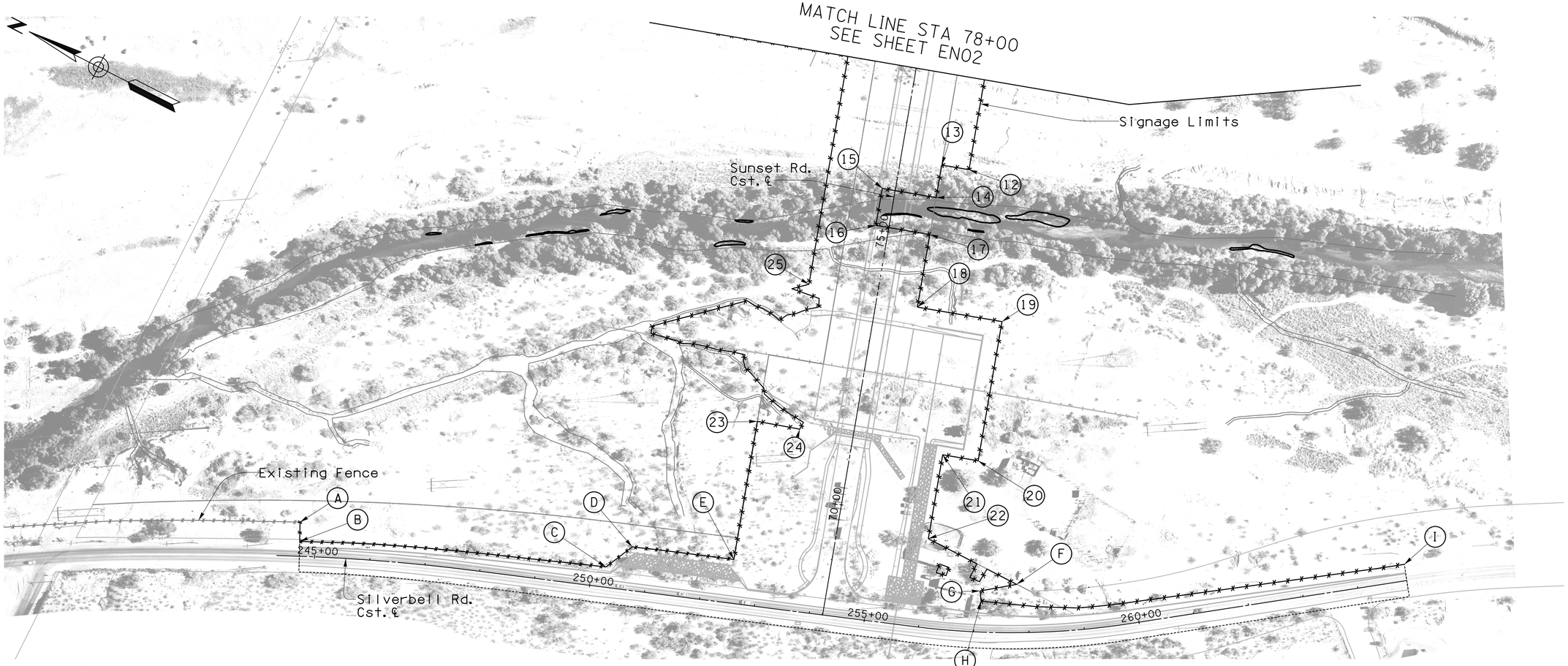

PRESERVATION FENCING PLAN - 1 of 2
1" =100'-0"

Preservation Fencing Notes:

1. Preservation Fencing shall be installed prior to mobilization. Contact Pima County DOT representative for location and placement of Fencing.
2. Signage to be placed on fencing along the south side of the roadway between the Santa Cruz River and I-10, every 100'.

PRESERVATION AREA
DO NOT ENTER

3. See Detail 7, LD02 for Preservation Fencing installation detail.
4. The Contractor shall notify all personnel that flow within the Santa Cruz River is reclaimed water from Pima County Wastewater Reclamation Facilities and is not for human consumption. Avoid direct contact with eyes, ears, nose or mouth.
5. No permanent loss is allowed in areas designated as jurisdictional waters or wetlands. No preservation fence installation activities within the designated jurisdictional waters or wetlands will be permitted.
6. Preservation fencing shall be maintained at all times and replaced, as needed, after storm events.

FENCE LAYOUT - SUNSET ℄		
POINT	STATION	OFFSET
12	76+35.32	125.0' RT
13	76+35.32	75.0' RT
14	75+75.61	75.0' RT
15	75+75.61	23.7' LT
16	75+07.92	23.7' LT
17	75+07.92	75.0' RT
18	73+75.00	75.0' RT
19	73+75.00	230.0' RT
20	71+20.00	230.0' RT
21	71+20.00	165.0' RT
22	69+66.21	165.0' RT
23	71+22.98	175.0' LT
24	71+21.97	97.2' LT
25	73+82.72	125.0' LT

FENCE LAYOUT - SILVERBELL ℄		
POINT	STATION	OFFSET
A	244+72.90	62.8' LT
B	244+73.55	28.0' LT
C	250+25.93	38.3' LT
D	250+68.32	80.1' LT
E	252+53.35	81.0' LT
F	257+78.00	89.2' LT
G	257+08.12	76.2' LT
H	257+10.72	57.2' LT
I	264+89.25	31.8' LT

Cultural Resources Notes:
See Sheet EN01

Landscape Notes:
See Sheet EN01

Priscilla S. Cornello, P.E., Director

Designed	JWG	11/15
Drawn	JHS, MJL	11/15
Checked	CGP	11/15
Proj. Engr.	JAM	11/15

No.	Revision Description	Engineer	Date

Structural Grace, Inc
14315 E. East Linwell Rd., Ste. 200, Tucson, AZ 85719 (520) 320-0516

Call us four two full working days before you begin excavation.
ARIZONA 811
Arizona Blue Stake, Inc.
Dial 8-1-1 or 1-800-STAKE-IT (782-5348)
In Maricopa County: (602) 263-1100

Pima County Department of Transportation

PRESERVATION FENCING - 1 OF 2
SUNSET ROAD - SEGMENT 1
SILVERBELL RD. TO I-10

PROJECT NO. 4RTSUN

SUNSET ROAD - SILVERBELL ROAD TO I-10 - PROJECT NO. 4RTSUN

Scale:	As Noted	Sheet EN02 of EN03	Page 26 of 203

FILE NAME: W:\Jobs\2013\1326_Sunset\1326_Working\1326_Sunset_EN02_PF02.dgn DATE: 11/16/2015 TIME: 4:24:41 PM MLichtenstein

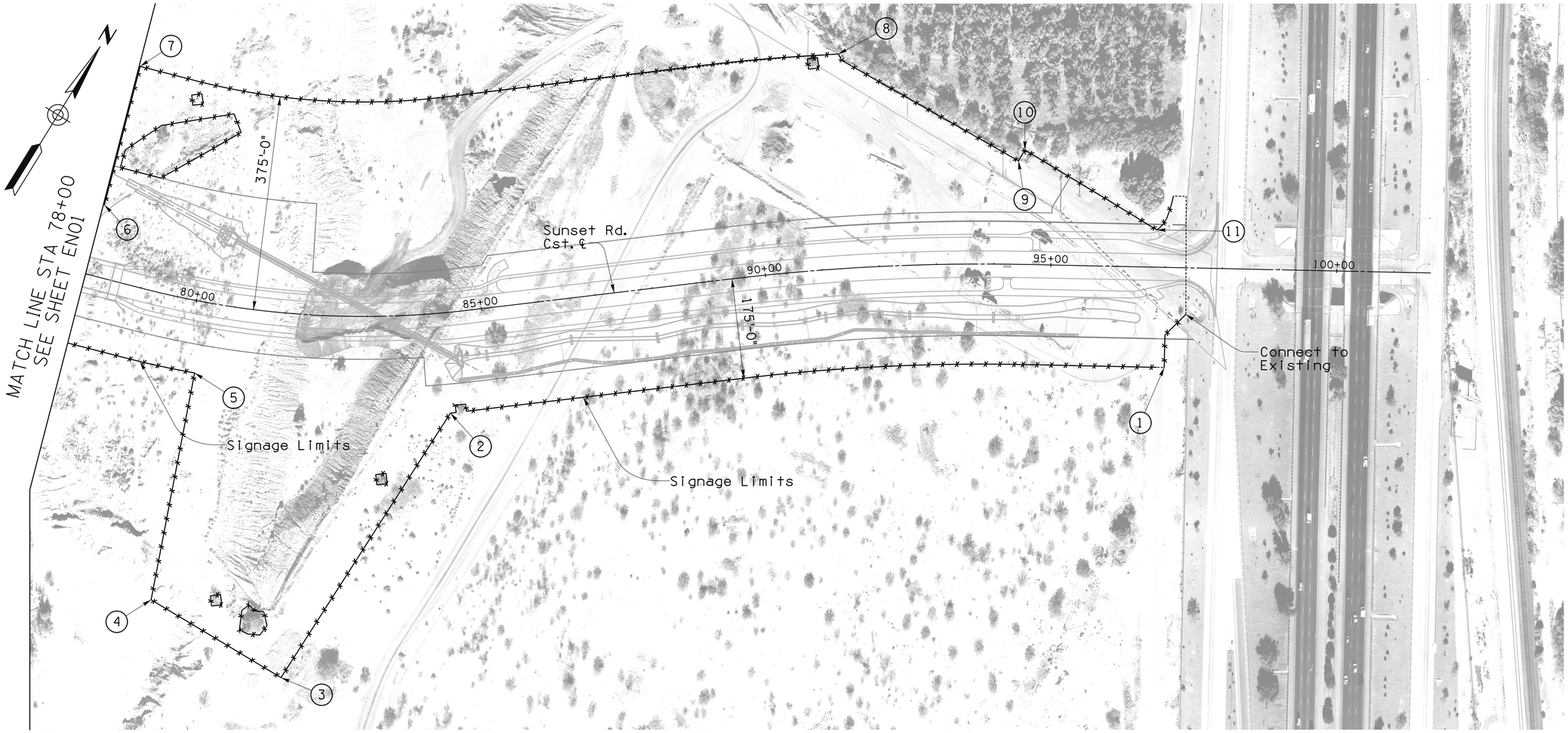

PRESERVATION FENCING PLAN - 2 of 2
1" =100'-0"

Preservation Fencing Notes:

1. Preservation Fencing shall be installed prior to mobilization. Contact Pima County DOT representative for location and placement of Fencing.
2. Signage to be placed on fencing along the south side of the roadway between the Santa Cruz River and I-10, every 100'.

PRESERVATION
AREA

DO NOT ENTER

3. See Detail 7, LD02 for Preservation Fencing installation detail.
4. The Contractor shall notify all personnel that flow within the Santa Cruz River is reclaimed water from Pima County Wastewater Reclamation Facilities and is not for human consumption. Avoid direct contact with eyes, ears, nose or mouth.
5. No permanent loss is allowed in areas designated as jurisdictional waters or wetlands. No preservation fence installation activities within the designated jurisdictional waters or wetlands will be permitted.
6. Preservation fencing shall be maintained at all times and replaced, as needed, after storm events.

FENCE LAYOUT - SUNSET ℄		
POINT	STATION	OFFSET
1	97+01.86	175.0' RT
2	84+29.94	175.8' RT
3	81+90.92	636.3' RT
4	80+14.87	528.8' RT
5	80+18.61	125.0' RT
6	78+01.80	125.0' LT
7	78+01.80	375.0' LT
8	91+51.43	375.0' LT
9	94+40.26	181.0' LT
10	94+50.83	200.0' LT
11	96+83.88	65.2' LT

Cultural Resources Notes:
See Sheet EN01

Landscape Notes:
See Sheet EN01

Pima County Department of Transportation

Priscilla S. Cornello, P.E., Director

Designed	JWG	11/15
Drawn	JHS, MJL	11/15
Checked	CGP	11/15
Proj. Engr.	JAM	11/15

No.	Revision Description	Engineer	Date

Structural Grace, Inc
1325 E. Fort Lowell Rd., Ste. 200, Tucson, AZ 85719 (520) 320-0516

Call at least two full working days before you begin excavation.
ARIZONA 811
Arizona Blue Stake, Inc.
Dial 8-1-1 or 1-800-STAKE-IT (782-5348)
In Maricopa County: (602) 263-1100

PRESERVATION FENCING - 2 OF 2
SUNSET ROAD - SEGMENT 2
SILVERBELL RD. TO I-10

PROJECT NO. 4RTSUN

SUNSET ROAD - SILVERBELL ROAD TO I-10 - PROJECT NO. 4RTSUN

Scale:	As Noted	Sheet EN03 of EN03	Page 27 of 203

FILE NAME: W:\Jobs\2013\1326_Sunset\1326_Working\1326_Sunset_EN03_PF03.dgn DATE: 11/16/2015 TIME: 4:25:01 PM MLichtenstein

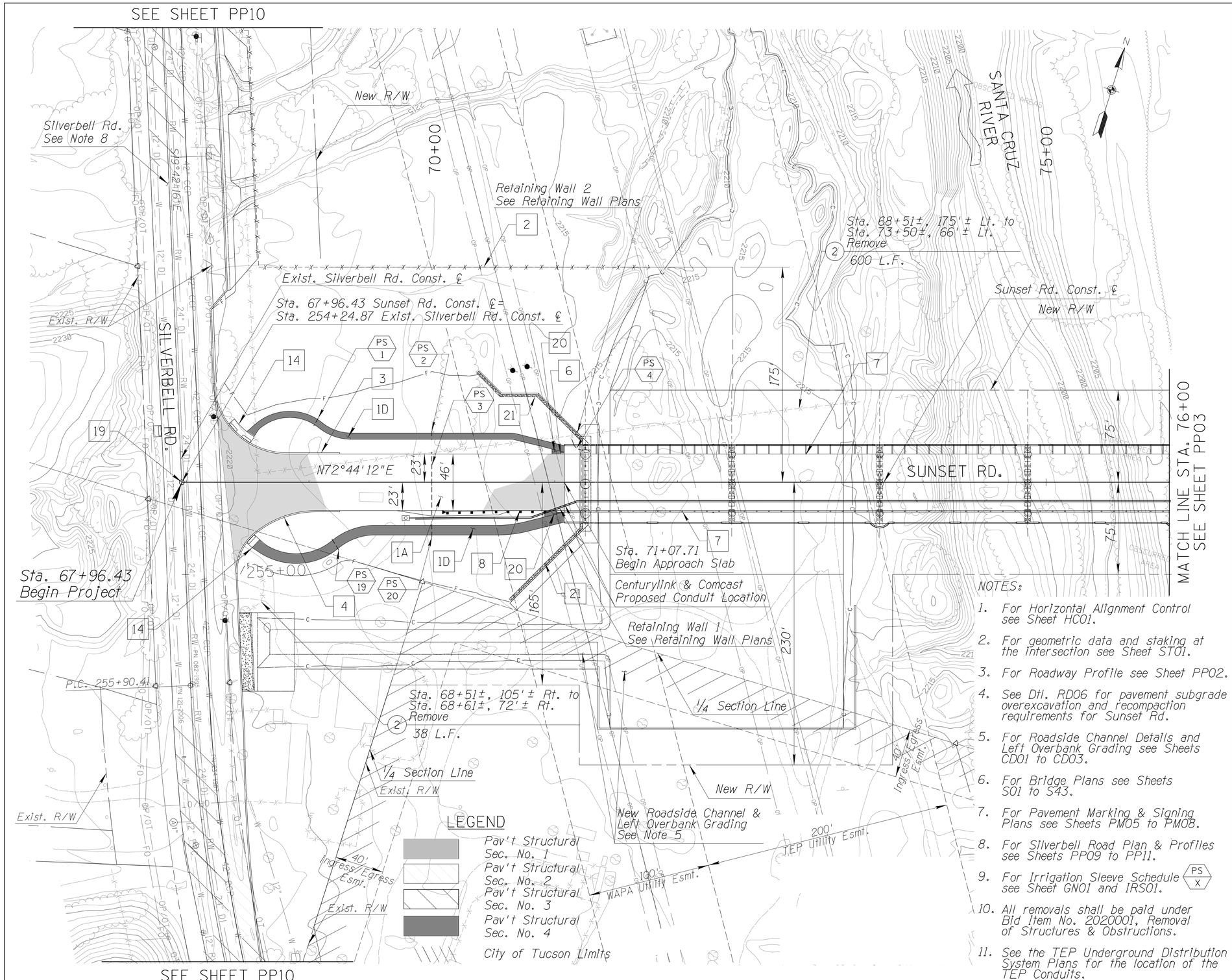

REMOVAL ITEMS *(See Note 10)*

(2) Remove Fence. Total=638 L.F.

NEW ITEMS

1 Pavement
- A Structural Section No. 1 Install 14,321 S.F.
- D Structural Section No. 4 Install 3,496 S.F.

2 Smooth Wire Game Fence, Dtl. RD13
Sta. 68+51±, 175' Lt. to
Sta. 71+77±, 175' Lt.
Bid Item No. 9030310
Install 326 L.F.

3 Conc. Ford Wall (1'x6')
(Omit Depth Gauge)
ADOT Std. Dwg. C-19.10
Sta. 68+22± to 69+25± Lt.
Bid Item No. 9080506
Install 135 L.F.

4 Conc. Ford Wall (1'x4')
(Omit Depth Gauge & Weep Holes)
ADOT Std. Dwg. C-19.10
Sta. 68+41± to 69+25± Rt.
Bid Item No. 9080504
Install 111 L.F.

6 Conc. Curb Terminal Section
Std. Dtl. 212
Sta. 71+04.71, 23' Lt.
Bid Item No. 9080090
Install 1 EA.

7 8"x2" Deck Drain (Typ.)
See Bridge Plans

8 Guard Rail & Barrier
Sta. 70+09 Rt.
See Barrier Summary Sheet SB01

14 Conc. Landing w/ Detectable Warning Strip, See Dtl. RD02
Bid Item No. 9080292
Install 3 EA.

19 Survey Monument
Std. Dtl. 103
Sta. 67+96.43
Bid Item No. 9090002
Install 1 EA.

20 Sta. 70+97.71 to 71+07.71 Lt.
Sta. 70+91.92 to 71+07.71 Rt.
Pave Between A.C. Path and Roadway with Pav't Structural Sec. No. 4

21 Place 6" Riprap (Dumped) next to Retaining Wall (2' x Length), T=12", D_{50} = 6".
See Sheet CD04 for Gradation.
Color will be Apache Brown or approved equal.
Bid Item No. 9130001
Install 15 C.Y.

NOTES:

1. For Horizontal Alignment Control see Sheet HC01.
2. For geometric data and staking at the intersection see Sheet ST01.
3. For Roadway Profile see Sheet PP02.
4. See Dtl. RD06 for pavement subgrade overexcavation and recompaction requirements for Sunset Rd.
5. For Roadside Channel Details and Left Overbank Grading see Sheets CD01 to CD03.
6. For Bridge Plans see Sheets S01 to S43.
7. For Pavement Marking & Signing Plans see Sheets PM05 to PM08.
8. For Silverbell Road Plan & Profiles see Sheets PP09 to PP11.
9. For Irrigation Sleeve Schedule (PS X) see Sheet GN01 and IRS01.
10. All removals shall be paid under Bid Item No. 2020001, Removal of Structures & Obstructions.
11. See the TEP Underground Distribution System Plans for the location of the TEP Conduits.

40' 0 40' 80'
SCALE: 1"=40'

No.	Revision Description	Engineer	Date

		Date
Designed	MPK	11/15
Drawn	RM	11/15
Checked	CJR	11/15
Proj. Engr.	MPK	11/15

Priscilla S. Cornelio, P.E., Director

Registered Professional Engineer (Civil) CERTIFICATE NO. 40590 MARK P. KERSINER DATE SIGNED 11/13/15 EXPIRES 6-30-16

AECOM
TRANSPORTATION
AECOM USA, Inc.
5151 E. Broadway Blvd., SUITE 400
Tucson, Arizona 85705
T 520.887.7800 F 520.887.8438
www.aecom.com

ARIZONA 811
AT LEAST TWO FULL BUSINESS DAYS BEFORE YOU DIG, CALL ARIZONA 811 TO HAVE UNDERGROUND PIPELINES AND UTILITIES MARKED TO AVOID DAMAGE AND INTERRUPTION OF SERVICE.

Pima County Department of Transportation

ROADWAY PLAN SHEET
SUNSET ROAD - SEGMENT 1
SILVERBELL RD. TO I-10
STA. 67+96 TO STA. 76+00
PROJECT NO. 4RTSUN

SUNSET ROAD - SILVERBELL ROAD TO I-10 - PROJECT NO. 4RTSUN

Scale: 1"=40' Horiz. | Sheet PP01 of PP12 | Page 28 of 203

FILE NAME: P:\60311412 Sunset Rd\900-Work\910-CAD\20-SHEETS\4RTSUN_pl01_segl.dgn DATE: 11/13/2015 TIME: 10:21:37 AM MurrietaR

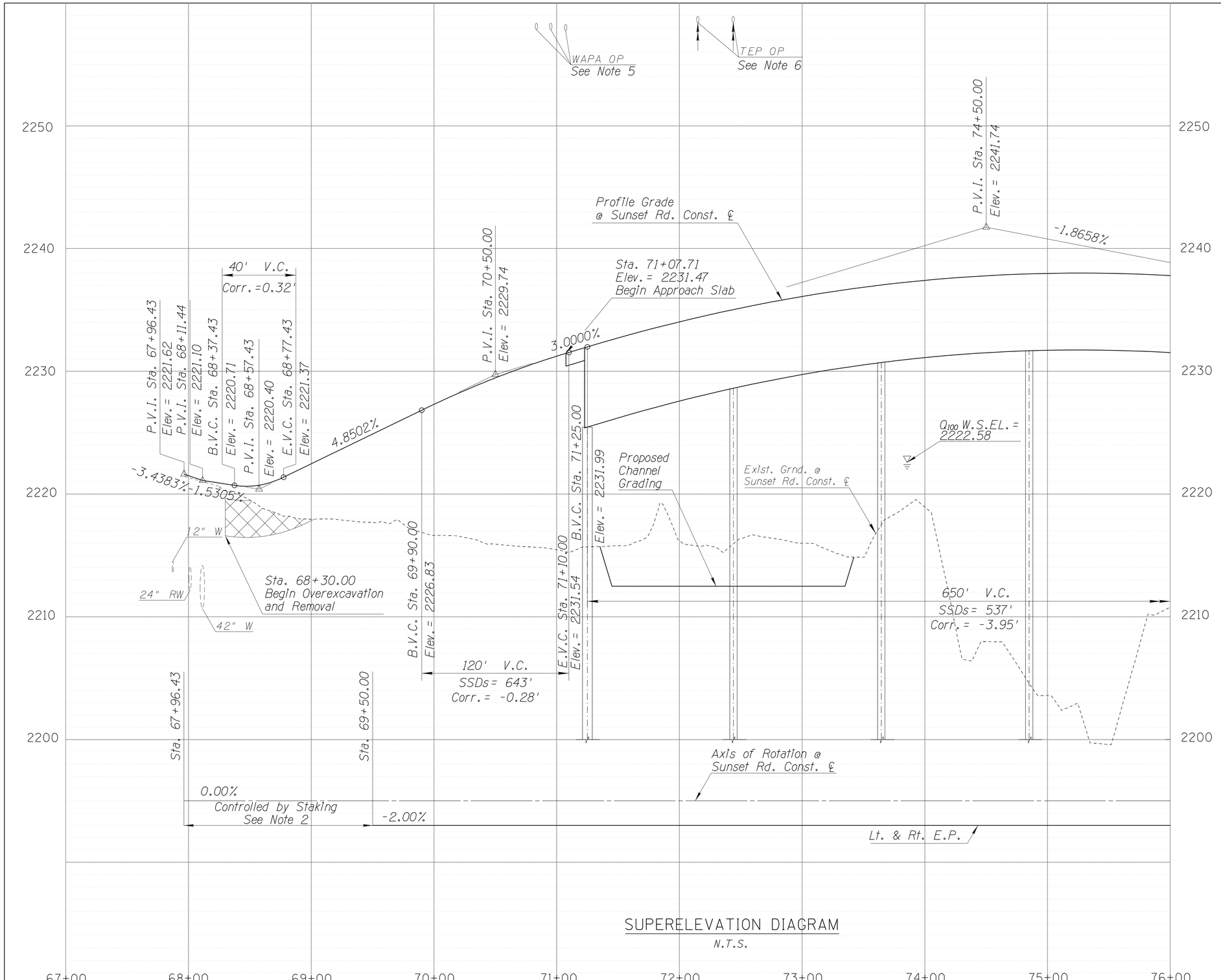

SUPERELEVATION DIAGRAM

N.T.S.

NOTES:

1. For Horizontal Alignment Control see Sheet HC01.
2. For Staking Plan see Sheet ST01.
3. For Roadway Plan see Sheet PP01.
4. For Channel Grading see Sheets CD01 to CD03.
5. WAPA overhead power line elevations are 2255.5±, 2255.1± & 2254.6±. Line elevations were surveyed on Aug. 17, 2015. WAPA Sag Report shows that overhead lines can vary up to 20' in elevation based on outdoor temperature. Contractor shall verify elevations of overhead lines prior to construction of bridge abutment drilled shafts.
6. TEP overhead power line elevations are 2298.4± & 2298.1±. Line elevations were surveyed on Aug. 17, 2015. Contractor shall verify elevations of overhead lines prior to construction of bridge pier drilled shafts.

LEGEND

Limits of Overexcavation and Removal
See Dtl. RD06

40' 0 40' 80'
SCALE: 1" =40'

No.	Revision Description	Engineer	Date

		Date
Designed	MPK	11/15
Drawn	RM	11/15
Checked	CJR	11/15
Proj. Engr.	MPK	11/15

Priscilla S. Cornelio, P.E., Director

Registered Professional Engineer (Civil) CERTIFICATE NO. 42090 MATTHEW P. KERSHNER STATE OF ARIZONA DATE SIGNED 6-30-16 EXPIRES 6-30-16

AECOM

TRANSPORTATION

AECOM USA, Inc.
10690 E. Rincon Blvd., SUITE 123
Tucson, Arizona 85748
T 520.298.8700 F 520.299.8777

www.aecom.com

CALL at least two working days before you begin work
ARIZONA 811
Blue Stake, Inc.
Call Before You Dig
1-(602) 263-1100
1-(800) 782-5348
Web Ticket Entry: www.azbluestake.com

Pima County Department of Transportation

ROADWAY PROFILE SHEET
SUNSET ROAD - SEGMENT 1
SILVERBELL RD. TO I-10
STA. 67+96 TO STA. 76+00
PROJECT NO. 4RTSUN

SUNSET ROAD - SILVERBELL ROAD TO I-10 - PROJECT NO. 4RTSUN

Scale:	1"= 40' Horiz. 1"= 4' Vert.	Sheet PP02 of PP12	Page 29 of 203

FILE NAME: P:\60311412 Sunset Rd\900-Work\910-CAD\20-SHEETS\4RTSUN_pr01_seg1.dgn DATE: 11/13/2015 TIME: 10:22:11 AM MurrietaR

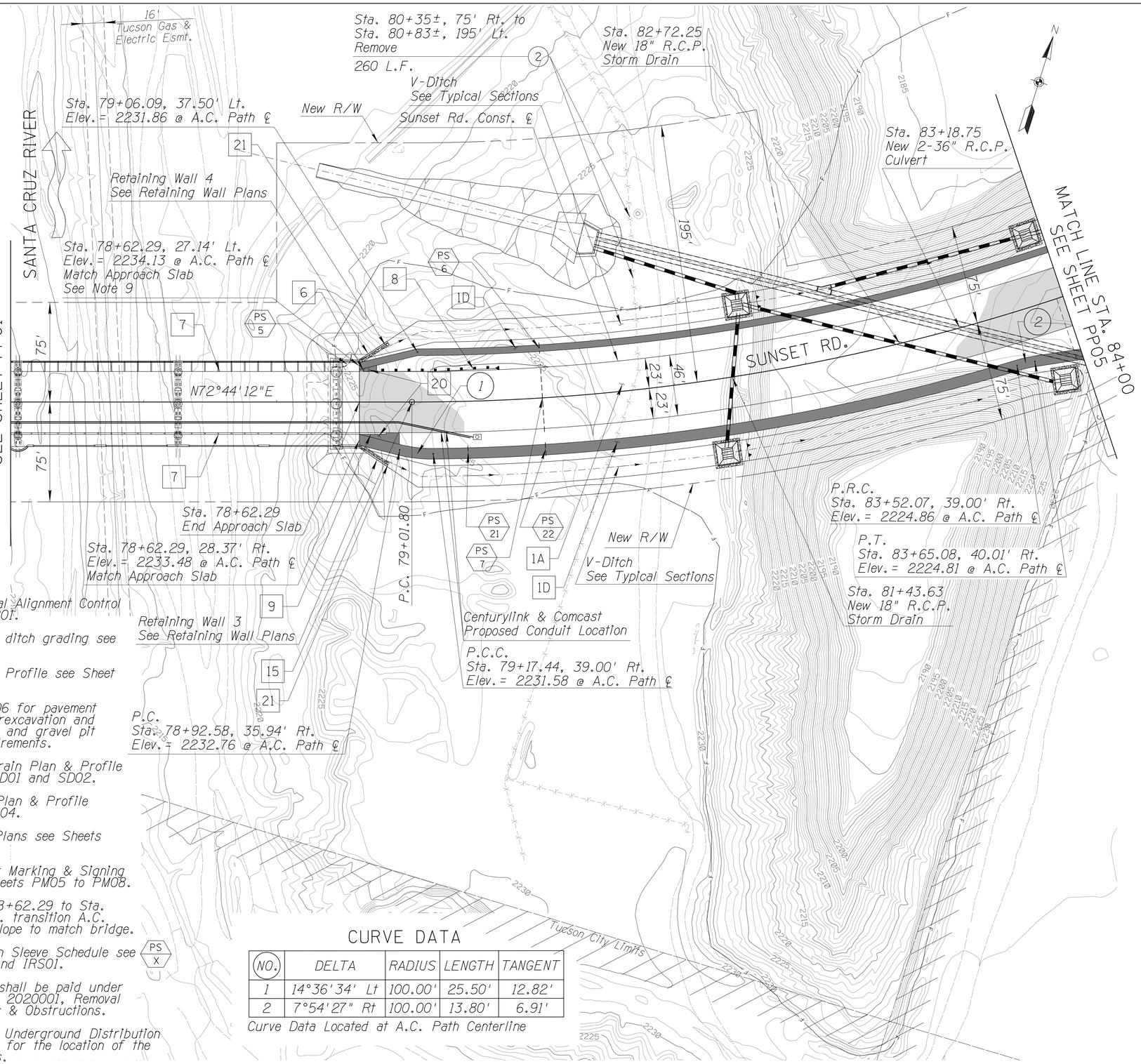

NOTES:

1. For Horizontal Alignment Control see Sheet HC01.
2. For roadside ditch grading see Dtl. RD04
3. For Roadway Profile see Sheet PP04.
4. See Dtl. RD06 for pavement subgrade overexcavation and recompaction, and gravel pit backfill requirements.
5. For Storm Drain Plan & Profile see Sheets SD01 and SD02.
6. For Culvert Plan & Profile see Sheet CD04.
7. For Bridge Plans see Sheets S01 to S43.
8. For Pavement Marking & Signing Plans see Sheets PM05 to PM08.
9. From Sta. 78+62.29 to Sta. 78+80.00 Lt. transition A.C. Path cross slope to match bridge.
10. For Irrigation Sleeve Schedule see Sheet GN01 and IRS01. (PS X)
11. All removals shall be paid under Bid Item No. 2020001, Removal of Structures & Obstructions.
12. See the TEP Underground Distribution System Plans for the location of the TEP Conduits.

CURVE DATA

(NO.)	DELTA	RADIUS	LENGTH	TANGENT
1	14°36'34" Lt	100.00'	25.50'	12.82'
2	7°54'27" Rt	100.00'	13.80'	6.91'

Curve Data Located at A.C. Path Centerline

REMOVAL ITEMS (See Note 11)

(2) Remove Fence. Total = 260 L.F.

NEW ITEMS

1 Pavement
- A Structural Section No. 1 Install 25,415 S.F.
- D Structural Section No. 4 Install 7,210 S.F.

6 Conc. Curb Terminal Section Std. Dtl. 212 Sta. 78+62.29, 23' Lt. Bid Item No. 9080090 Install 1 EA.

7 8"x2" Deck Drain (Typ.) See Bridge Plans

8 Guard Rail Sta. 78+62 Lt. See Barrier Summary Sheet SB01

9 Barrier Sta. 78+62 Rt. See Barrier Summary Sheet SB01

15 Survey Monument, Frame and Cover Std. Dtl. 103 Sta. 79+01.80 Bid Item No. 9090021 Install 1 EA.

20 Sta. 78+62.29 to 78+75.29 Lt. Sta. 78+62.29 to 78+92.29 Rt. Pave Between A.C. Path and Roadway with Pav't Structural Sec. No. 4

21 Place 6" Riprap (Dumped) next to Retaining Wall (2' x Length), T=12", D_{50} = 6". See Sheet CD04 for Gradation. Color will be Apache Brown or approved equal. Bid Item No. 9130001 Install 4 C.Y.

LEGEND

- Pav't Structural Sec. No. 1
- Pav't Structural Sec. No. 4
- City of Tucson Limits

40' 0 40' 80'
SCALE: 1" = 40'

Priscilla S. Cornelio, P.E., Director

No.	Revision Description	Engineer	Date

		Date
Designed	MPK	11/15
Drawn	RM	11/15
Checked	CJR	11/15
Proj. Engr.	MPK	11/15

Registered Professional Engineer (Civil) CERTIFICATE NO. 34562 CHRISTOPHER J. ROBINSON STATE OF ARIZONA DATE EXPIRES 3-31-2017

AECOM
TRANSPORTATION
AECOM USA, Inc. 4444 E. Broadway Blvd., SUITE 400 Tucson, Arizona 85705 T 520.887.7800 F 520.887.8438
www.aecom.com

ARIZONA 811 BLUE STAKE, INC. CALL 8 WORK DAYS FOR MARKING OUTSIDE THE TUCSON AREA 1-800-782-5348 WWW.BLUESTAKE.ORG

Pima County Department of Transportation

ROADWAY PLAN SHEET
SUNSET ROAD - SEGMENT I
SILVERBELL RD. TO I-10
STA. 76+00 TO STA. 84+00
PROJECT NO. 4RTSUN

SUNSET ROAD – SILVERBELL ROAD TO I-10 – PROJECT NO. 4RTSUN

Scale: 1"=40' Horiz. | Sheet PP03 of PP12 | Page 30 of 203

FILE NAME: P:\60311412 Sunset Rd\900-Work\910-CAD\20-SHEETS\4RTSUN_pl02_seg1.dgn DATE: 11/16/2015 TIME: 11:08:24 AM MurrietaR

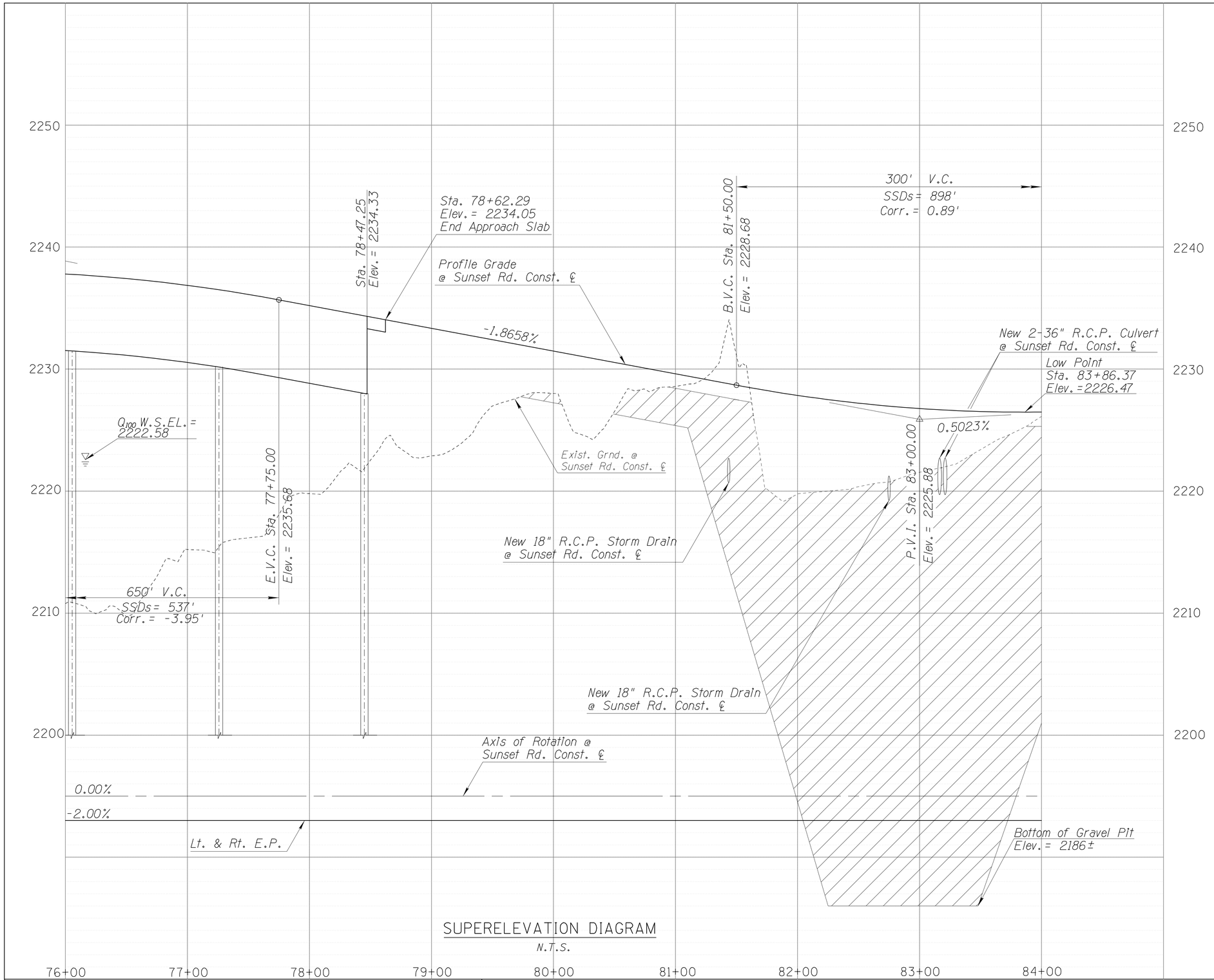

SUPERELEVATION DIAGRAM

N.T.S.

NOTES:

1. For Horizontal Alignment Control see Sheet HC01.
2. For Roadway Plan see Sheet PP03.
3. For Storm Drain Plan & Profile see Sheet SD01.
4. For Culvert Plan & Profile see Sheet CD04.

LEGEND

Limits of Overexcavation and Recompaction See Dtl. RD06

40' 0 40' 80'

SCALE: 1" = 40'

Scale:	1"= 40' Horiz. 1"= 4' Vert.	Sheet PP04 of PP12	Page 31 of 203

Pima County Department of Transportation

Priscilla S. Cornelio, P.E., Director

No.	Revision Description	Engineer	Date

		Date
Designed	MPK	11/15
Drawn	RM	11/15
Checked	CJR	11/15
Proj. Engr.	MPK	11/15

Registered Professional Engineer (Civil) CERTIFICATE NO. 40090 MATTHEW P. KERSHNER STATE OF ARIZONA DATE SIGNED 11/13/15 EXPIRES 6-30-16

AECOM

TRANSPORTATION

AECOM USA, Inc.
1985 E. River Road, Suite 123
Tucson, Arizona 85718
T 520.299.8700 F 520.299.8777

www.aecom.com

ROADWAY PROFILE SHEET
SUNSET ROAD - SEGMENT 1
SILVERBELL RD. TO I-10
STA. 76+00 TO STA. 84+00
PROJECT NO. 4RTSUN

SUNSET ROAD - SILVERBELL ROAD TO I-10 - PROJECT NO. 4RTSUN

FILE NAME: P:\60311412 Sunset Rd\900-Work\910-CAD\20-SHEETS\4RTSUN_pr02_segl.dgn DATE: 11/13/2015 TIME: 10:24:23 AM MurrietaR

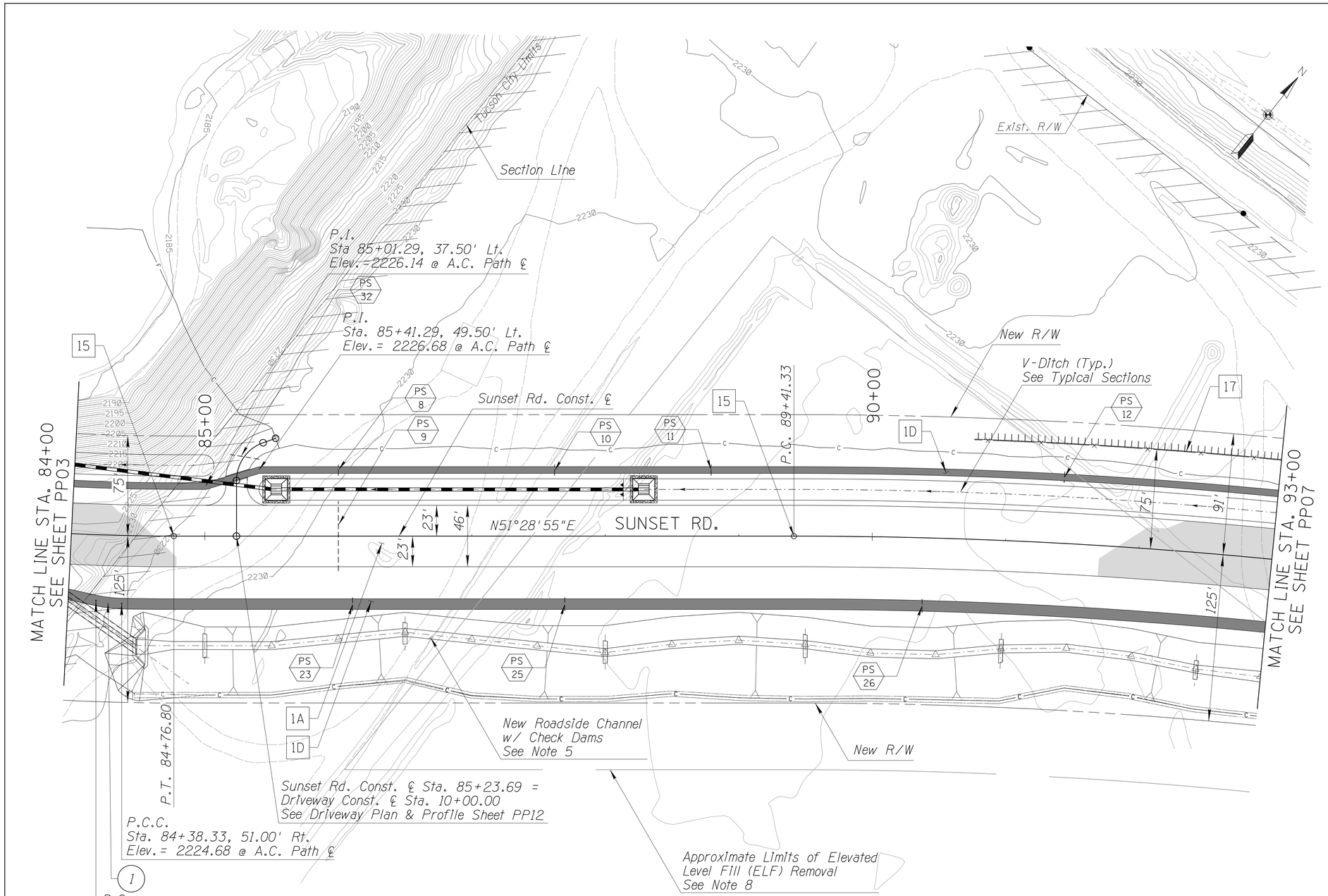

CURVE DATA

(NO.)	DELTA	RADIUS	LENGTH	TANGENT
1	11°05'46" Lt	100.00'	19.37'	9.71'

Curve Data Located at A.C. Path Centerline

REMOVAL ITEMS

NEW ITEMS

1 Pavement
- A Structural Section No. 1
  Install 42,676 S.F.
- D Structural Section No. 4
  Install 11,696 S.F.

15 Survey Monument, Frame and Cover
Std. Dtl. 103
Sta. 84+76.80
Sta. 89+41.33
Bid Item No. 9090021
Install 2 EA.

17 Chain Link Fence, Type 1 (48")
ADOT Std. Dwg. C-12.20
Sta. 90+74±, 74.5' Lt. to
Sta. 93+00±, 74.5' Lt.
Bid Item No. 9020002
Install 226 L.F.

NOTES:

1. For Horizontal Alignment Control see Sheet HC01.
2. For Roadway Profile see Sheet PP06.
3. See Dtl. RD06 for pavement subgrade overexcavation and recompaction requirements.
4. For Storm Drain Plan and Profile See Sheet SD02.
5. For Culvert Plan & Profile and Roadside Channel Details see Sheets CD04 to CD06.
6. For Pavement Marking & Signing Plans see Sheets PM05 to PM08.
7. See Irrigation Sleeve Schedule on PS X Sheet GN01 and IRS01.
8. To facilitate archaeology efforts, elevated level fill (ELF) was removed within the outlined area to a depth of three feet for a total quantity of approximately 16,800 CY and stockpiled within the project area. The existing ground shown in the profile, the earthwork and cross sections were not revised to reflect removal of this fill dirt within this area. The contractor shall coordinate with Pima County to determine how the fill can be used within the project fill limits.

LEGEND

- Pav't Structural Sec. No. 1
- Pav't Structural Sec. No. 4
- ADOT New Access Control
- City of Tucson Limits

40' 0 40' 80'
SCALE: 1" = 40'

Priscilla S. Cornelio, P.E., Director

			Date
Designed	MPK		11/15
Drawn	RM		11/15
Checked	CJR		11/15
Proj. Engr.	MPK		11/15

No.	Revision Description	Engineer	Date

Registered Professional Engineer (Civil) CERTIFICATE NO. 42356 MARK P. KERSINER DATE SIGNED 11/13/15 EXPIRES 6-30-16

AECOM
TRANSPORTATION
AECOM USA, Inc.
4201 N. Oracle Rd., Suite 400
Tucson, Arizona 85705
T 520.887.7800 F 520.887.8438
www.aecom.com

ARIZONA811 BLUE STAKE, INC.
CALL AT LEAST TWO FULL WORKING DAYS BEFORE YOU DIG, GRADE OR EXCAVATE FOR THE MARKING OF MEMBER FACILITIES

ROADWAY PLAN SHEET
SUNSET ROAD - SEGMENT 1
SILVERBELL RD. TO I-10
STA. 84+00 TO STA. 93+00
PROJECT NO. 4RTSUN

Pima County Department of Transportation

SUNSET ROAD - SILVERBELL ROAD TO I-10 - PROJECT NO. 4RTSUN

Scale: 1"=40' Horiz. | Sheet PP05 of PP12 | Page 32 of 203

FILE NAME: P:\60311412 Sunset Rd\900-Work\910-CAD\20-SHEETS\4RTSUN_pl03_seg1.dgn DATE: 11/13/2015 TIME: 10:25:57 AM MurrietaR

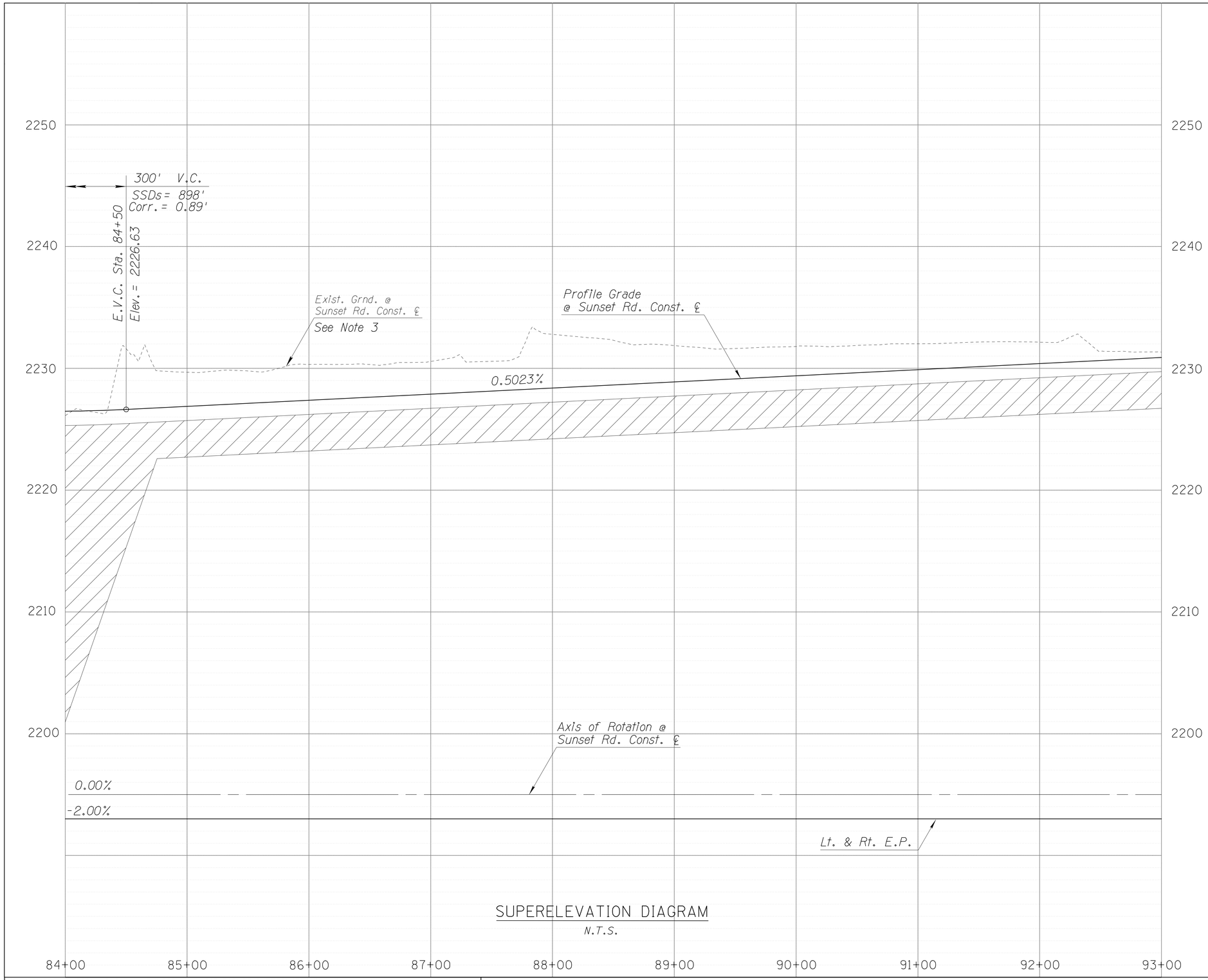

SUPERELEVATION DIAGRAM

N.T.S.

NOTES:

1. For Horizontal Alignment Control see Sheet HC01.
2. For Roadway Plan see Sheet PP05.
3. To facilitate archaeology efforts, elevated level fill (ELF) was removed within the outlined area shown on Sheet PP05 to a depth of three feet for a total quantity of approximately 16,800 CY and stockpiled within the project area. The existing ground shown in the profile, the earthwork and cross sections were not revised to reflect removal of this fill dirt within this area. The contractor shall coordinate with Pima County to determine how the fill can be used within the project fill limits.

LEGEND

Limits of Overexcavation and Recompaction See Dtl. RD06

40' 0 40' 80'
SCALE: 1" = 40'

Scale: 1" = 40' Horiz. 1" = 4' Vert.

Sheet PP06 of PP12

Page 33 of 203

Priscilla S. Cornelio, P.E., Director

No.	Revision Description	Engineer	Date

		Date
Designed	MPK	11/15
Drawn	RM	11/15
Checked	CJR	11/15
Proj. Engr.	MPK	11/15

Registered Professional Engineer (Civil) CERTIFICATE NO. 40090 MATTHEW P. KERSHNER 5/27/15 DATE SIGNED
EXPIRES 6-30-16

AECOM

TRANSPORTATION

AECOM USA, Inc.
3950 E. BROADWAY, SUITE 123
Tucson, Arizona 85718
T 520.299.8700 F 520.299.8777

www.aecom.com

Call at least two full working days before you dig
ARIZONA 811
BLUE STAKE, INC.
Arizona Blue Stake, Inc. 1-800-782-5348

Pima County Department of Transportation

ROADWAY PROFILE SHEET
SUNSET ROAD - SEGMENT 1
SILVERBELL RD. TO I-10
STA. 84+00 TO STA. 93+00
PROJECT NO. 4RTSUN

SUNSET ROAD - SILVERBELL ROAD TO I-10 - PROJECT NO. 4RTSUN

FILE NAME: P:\60311412 Sunset Rd\900-Work\910-CAD\20-SHEETS\4RTSUN_pr03_segl.dgn DATE: 11/13/2015 TIME: 10:26:21 AM MurrietaR

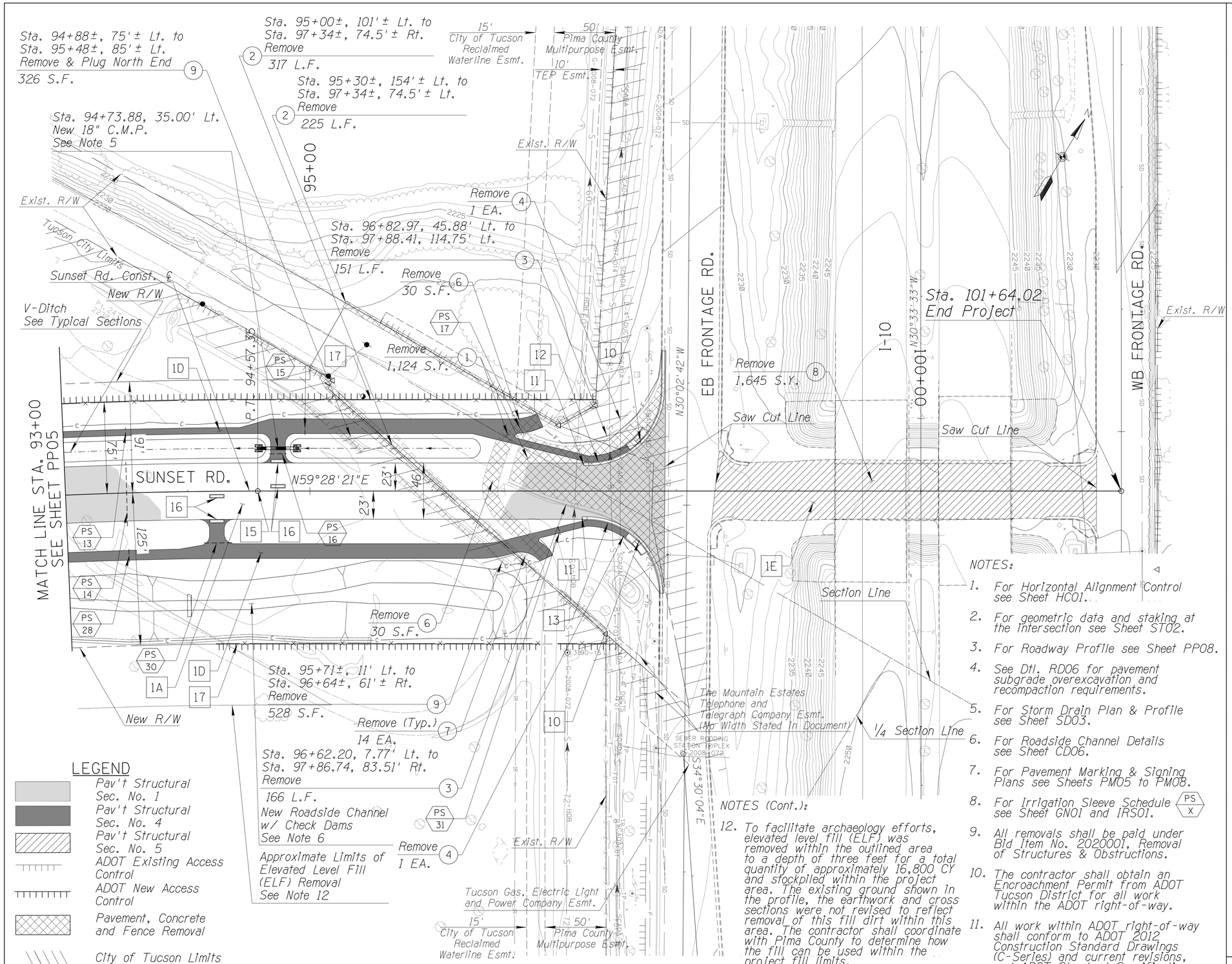

LEGEND

- Pav't Structural Sec. No. 1
- Pav't Structural Sec. No. 4
- Pav't Structural Sec. No. 5
- ADOT Existing Access Control
- ADOT New Access Control
- Pavement, Concrete and Fence Removal
- City of Tucson Limits

NOTES:

1. For Horizontal Alignment Control see Sheet HC01.
2. For geometric data and staking at the intersection see Sheet ST02.
3. For Roadway Profile see Sheet PP08.
4. See Dtl. RD06 for pavement subgrade overexcavation and recompaction requirements.
5. For Storm Drain Plan & Profile see Sheet SD03.
6. For Roadside Channel Details see Sheet CD06.
7. For Pavement Marking & Signing Plans see Sheets PM05 to PM08.
8. For Irrigation Sleeve Schedule (PS X) see Sheet GN01 and IRS01.
9. All removals shall be paid under Bid Item No. 2020001, Removal of Structures & Obstructions.
10. The contractor shall obtain an Encroachment Permit from ADOT Tucson District for all work within the ADOT right-of-way.
11. All work within ADOT right-of-way shall conform to ADOT 2012 Construction Standard Drawings (C-Series) and current revisions, and ADOT Standard Specifications.

NOTES (Cont.):

12. To facilitate archaeology efforts, elevated level fill (ELF) was removed within the outlined area to a depth of three feet for a total quantity of approximately 16,800 CY and stockpiled within the project area. The existing ground shown in the profile, the earthwork and cross sections were not revised to reflect removal of this fill dirt within this area. The contractor shall coordinate with Pima County to determine how the fill can be used within the project fill limits.

REMOVAL ITEMS (See Note 9)

1. Remove Pavement. Total=1,124 S.Y.
2. Remove Fence. Total=542 L.F.
3. Remove Curb & Gutter. Total=317 L.F.
4. Remove Conc. Sidewalk Ramp. Total=2 EA.
6. Remove Conc. Apron. Total=60 S.F.
7. Remove Conc. Blocks In Conflict. Total=14 EA.
8. Mill. Total=1,645 S.Y.
9. Remove Conc. Irrigation Channel. Total=854 S.F.

NEW ITEMS

1. Pavement
   - A: Structural Section No. 1 Install 24,699 S.F.
   - D: Structural Section No. 4 Install 9,555 S.F.
   - E: Structural Section No. 5 Install 14,800 S.F.
10. Conc. Sidewalk Ramp, Type A
    ADOT Std. Dwg. C-05.30
    Sta. 97+70.39, 40.40' Lt.
    Sta. 97+69.35, 40.75' Rt.
    Bid Item No. 9080294
    Install 2 EA.
11. Conc. Curb & Gutter Terminal Section
    See Dtl. RD03
    Sta. 97+24.14, 23' Lt.
    Sta. 97+22.75, 23' Rt.
    Bid Item No. 9080092
    Install 2 EA.
12. Conc. Curb & Gutter, Type D, h=6"
    ADOT Std. Dwg. C-05.10,
    Sta. 97+28.14, 23' Lt. to
    Sta. 97+88.41, 114.75' Lt.
    Bid Item No. 9080063
    Install 126 L.F.
13. Conc. Curb & Gutter, Type D, h=6"
    ADOT Std. Dwg. C-05.10,
    Sta. 97+26.75, 23' Rt. to
    Sta. 97+86.74, 83.51' Rt.
    Bid Item No. 9080063
    Install 95 L.F.
15. Survey Monument, Frame and Cover
    Std. Dtl. 103
    Sta. 94+57.35
    Bid Item No. 9090021
    Install 1 EA.
16. Conc. Landing w/ Detectable Warning Strip, See Dtl. RD05
    Sta. 94+23.67, 5.5' & 23' Rt.
    Sta. 94+73.88, 5.5' & 23' Lt.
    Bid Item No. 9080292
    Install 4 EA.
17. Chain Link Fence, Type 1 (48")
    ADOT Std. Dwg. C-12.20
    Sta. 94+22±, 124.5' Rt. to
    Sta. 96+89±, 124.5' Rt. &
    Sta. 97+03±, 124.5' Rt. to
    Sta. 97+42±, 124.5' Rt.
    Sta. 93+00±, 74.5' Lt. to
    Sta. 96+96±, 74.5' Lt. &
    Sta. 97+12±, 74.5' Lt. to
    Sta. 97+34±, 74.5' Lt.
    Bid Item No. 9020002
    Install 724 L.F.

40' 0 40' 80'
SCALE: 1"=40'

Priscilla S. Cornelio, P.E., Director

Designed	MPK	11/15
Drawn	RM	11/15
Checked	CJR	11/15
Proj. Engr.	MPK	11/15

No.	Revision Description	Engineer	Date

Registered Professional Engineer (Civil) CERTIFICATE NO. 40990 MARK P. KERSNER STATE OF ARIZONA DATE SIGNED 11/17/15 EXPIRES 6-30-16

AECOM
AECOM USA, Inc.
5151 E. Broadway Blvd., SUITE 400
Tucson, Arizona 85711
T 520.887.1800 F 520.887.8438
www.aecom.com

TRANSPORTATION

ARIZONA 811 STOP, LOOK AND DIG BEFORE YOU DIG! CALL 811 AT LEAST TWO FULL WORKING DAYS BEFORE YOU BEGIN EXCAVATION

Pima County Department of Transportation

ROADWAY PLAN SHEET
SUNSET ROAD - SEGMENT 1
SILVERBELL RD. TO I-10
STA. 93+00 TO 101+64
PROJECT NO. 4RTSUN

SUNSET ROAD – SILVERBELL ROAD TO I-10 – PROJECT NO. 4RTSUN

Scale: 1"=40' Horiz. | Sheet PP07 of PP12 | Page 34 of 203

FILE NAME: P:\60311412 Sunset Rd\900-Work\910-CAD\20-SHEETS\4RTSUN_pl04_segl.dgn DATE: 11/17/2015 TIME: 3:05:16 PM MurrietaR

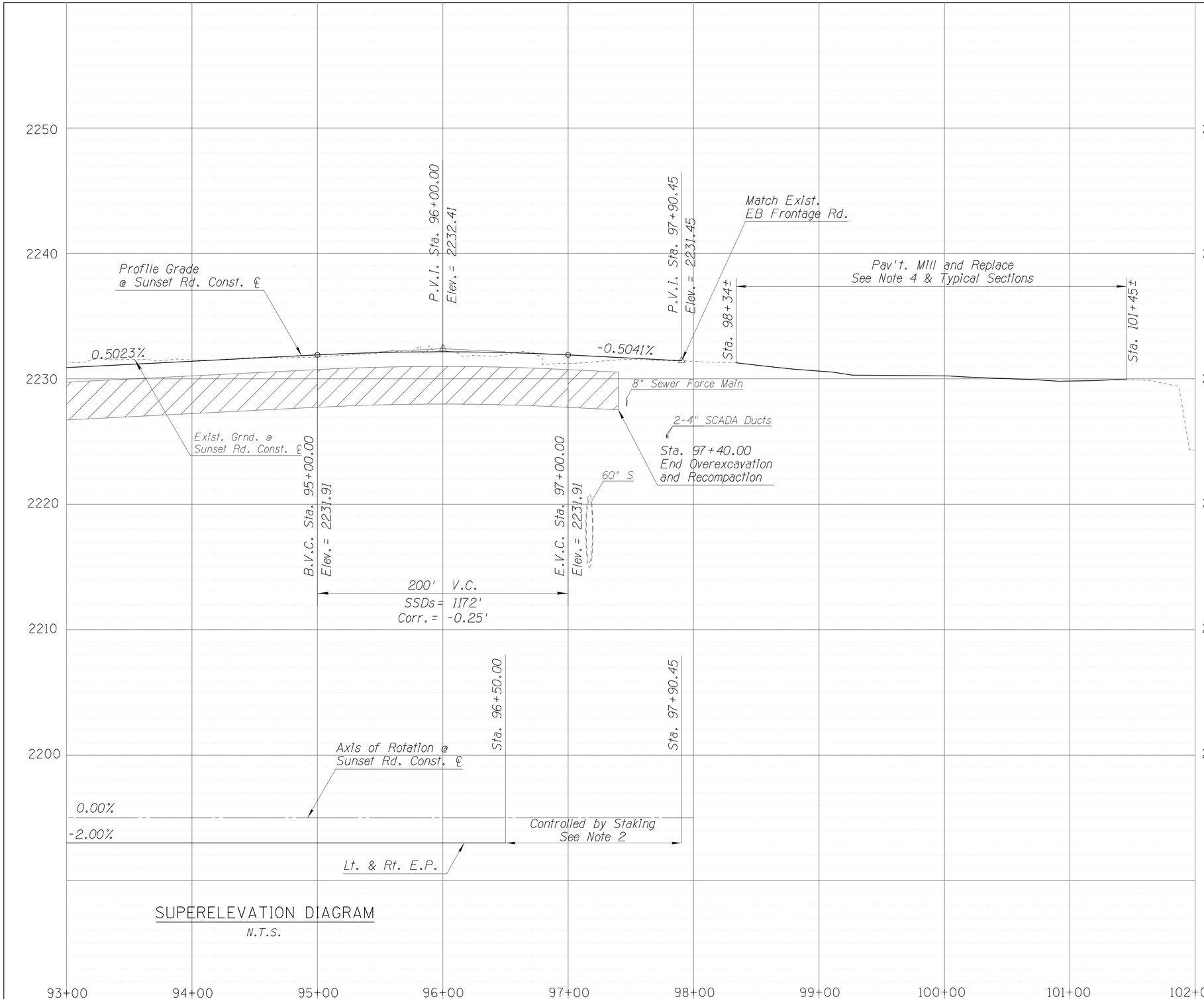

SUPERELEVATION DIAGRAM

N.T.S.

NOTES:

1. For Horizontal Alignment Control see Sheet HC01.
2. For Staking Plan see Sheet ST02.
3. For Roadway Plan see Sheet PP07.
4. Pavement mill and replace limits shall extend to the limits of the existing PCCP at both ends.

LEGEND

Limits of Overexcavation and Recompaction See Dtl. RD06

40' 0 40' 80'
SCALE: 1" = 40'

Scale: 1"= 40' Horiz. 1"= 4' Vert. | Sheet PP08 of PP12 | Page 35 of 203

Pima County Department of Transportation

ROADWAY PROFILE SHEET
SUNSET ROAD - SEGMENT 1
SILVERBELL RD. TO I-10
STA. 93+00 TO 102+00
PROJECT NO. 4RTSUN

TRANSPORTATION
AECOM USA, Inc.
3662 E. Broadway, SUITE 123
Tucson, Arizona 85716
T 520.299.8700 F 520.299.8777
www.aecom.com

Registered Professional Engineer (Civil) CERTIFICATE NO. 40090 MATTHEW P. KERSNER STATE OF ARIZONA DATE SIGNED 11/13/15 EXPIRES 6-30-16

No.	Revision Description	Engineer	Date

		Date
Designed	MPK	11/15
Drawn	RM	11/15
Checked	CJR	11/15
Proj. Engr.	MPK	11/15

Priscilla S. Cornelio, P.E., Director

SUNSET ROAD - SILVERBELL ROAD TO I-10 - PROJECT NO. 4RTSUN

FILE NAME: P:\60311412 Sunset Rd\900-Work\910-CAD\20-SHEETS\4RTSUN_pr04_seg1.dgn DATE: 11/13/2015 TIME: 10:28:38 AM MurrietaR

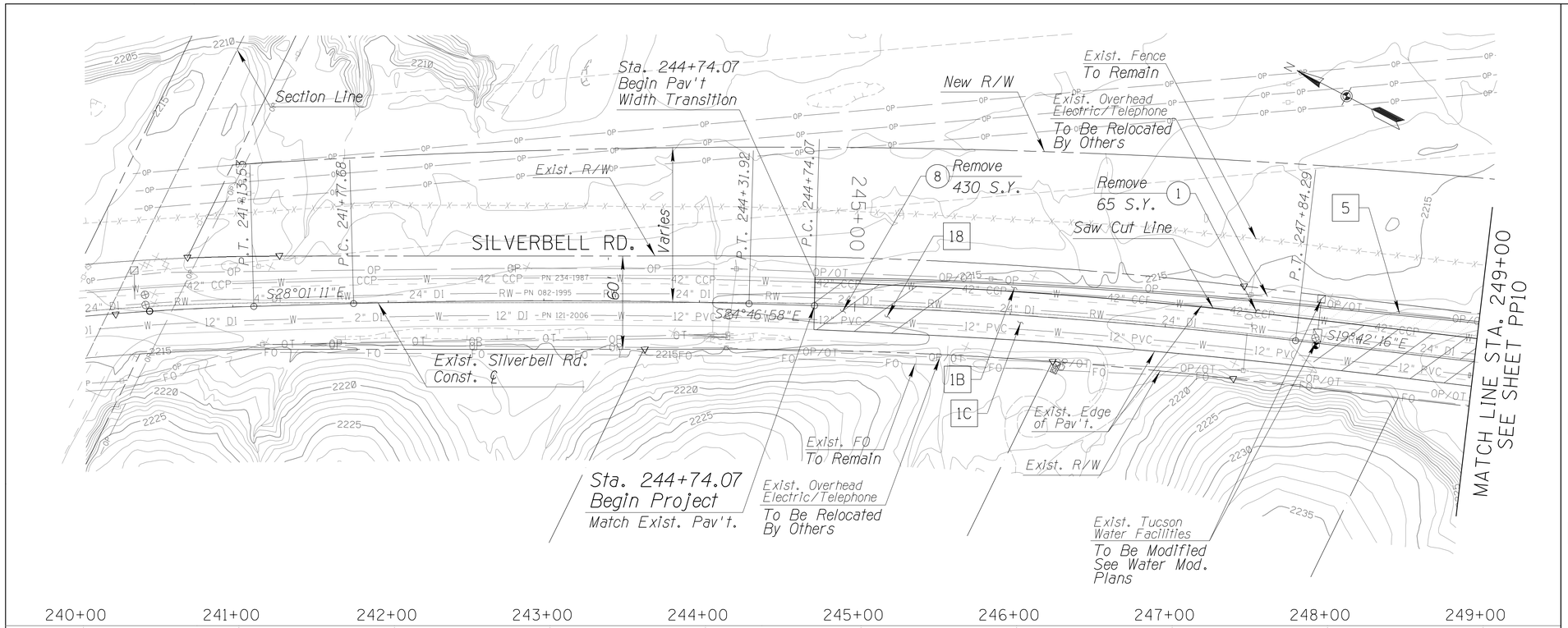

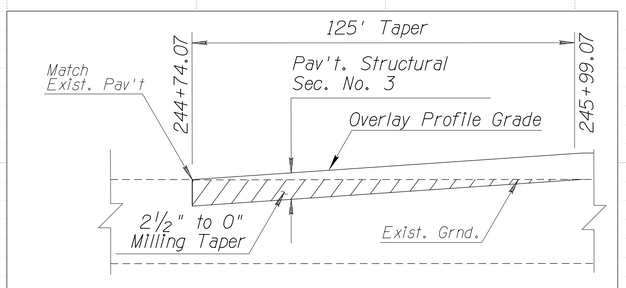

PAVEMENT OVERLAY TAPER DETAIL

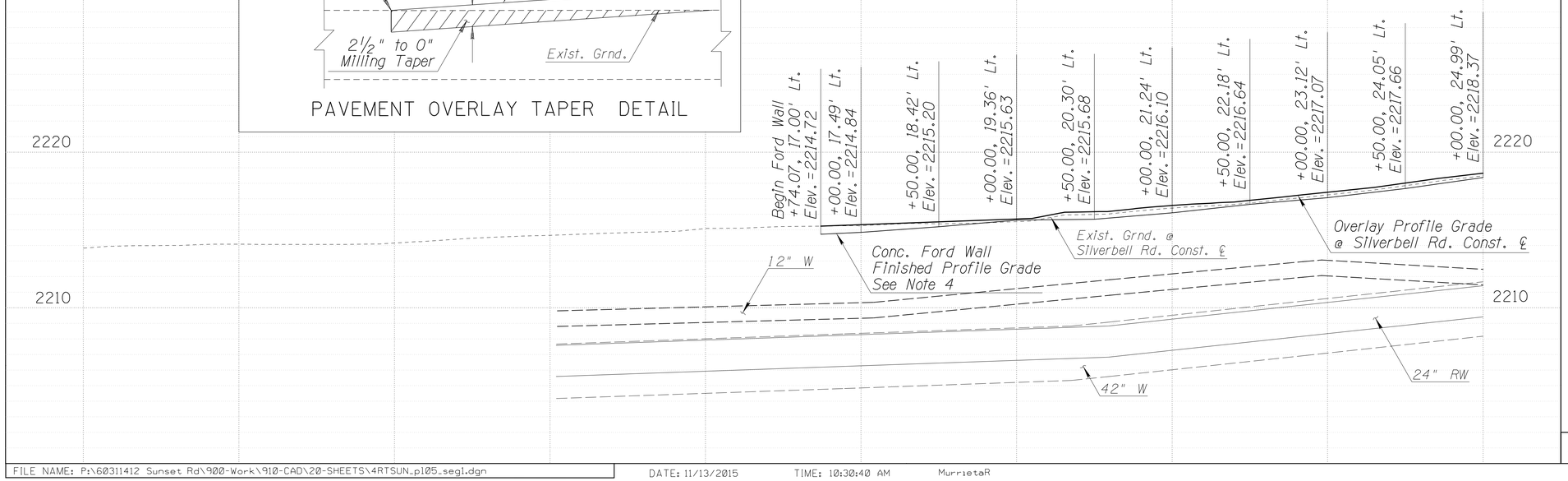

REMOVAL ITEMS *(See Note 3)*

(1) Remove Pavement. Total=65 S.Y.

(8) Mill. Total=430 S.Y. (See Pavement Overlay Taper Dtl. This Sheet)

NEW ITEMS

1 Pavement

- B Structural Section No. 2 Install 2,562 S.F.
- C Structural Section No. 3 Install 13,195 S.F.

5 Conc. Ford Wall (1'x2')
ADOT Std. Dwg. C-19.10
Sta. 244+74.07 to 249+00
Bid Item No. 9080502
Install 426 L.F.
See Note 4

18 Pavement Overlay Taper
See Dtl. This Sheet
Sta. 244+74.07 to 249+00

NOTES:

1. For Horizontal Alignment Control see Sheet HC01.
2. For Pavement Marking and Signing Plans see Sheets PM05 to PM08.
3. All removals shall be paid under Bid Item No. 2020001, Removal of Structures & Obstructions.
4. See staking information in profile view this sheet. Offset is at new edge of pavement. Elevation is at top of ford wall. Elevations account for 2.5" pavement overlay.

LEGEND

Pav't Structural Sec. No. 2

Pav't Structural Sec. No. 3

40' 0 40' 80'
SCALE: 1"=40'

Scale:	1"= 40' Horiz. 1"= 4' Vert.	Sheet PP09 of PP12	Page 36 of 203

Pima County Department of Transportation

Priscilla S. Cornelio, P.E., Director

No.	Revision Description	Engineer	Date

		Date
Designed	MPK	11/15
Drawn	RM	11/15
Checked	CJR	11/15
Proj. Engr.	MPK	11/15

Registered Professional Engineer (Civil) CERTIFICATE NO. 40090 MATTHEW P. KERSHNER STATE OF ARIZONA DATE SIGNED 11/13/15 EXPIRES 6-30-16

AECOM

TRANSPORTATION

AECOM USA, Inc.
5151 E. BROADWAY BLVD, SUITE 400
TUCSON, ARIZONA 85705
T 520.887.1800 F 520.887.9438
www.aecom.com

ROADWAY PLAN & PROFILE SHEET
SUNSET ROAD - SEGMENT 1
SILVERBELL RD. TO I-10
STA. 240+00 TO STA. 249+00
PROJECT NO. 4RTSUN

SUNSET ROAD - SILVERBELL ROAD TO I-10 - PROJECT NO. 4RTSUN

FILE NAME: P:\60311412 Sunset Rd\900-Work\910-CAD\20-SHEETS\4RTSUN_pl05_seg1.dgn DATE: 11/13/2015 TIME: 10:30:40 AM MurrietaR

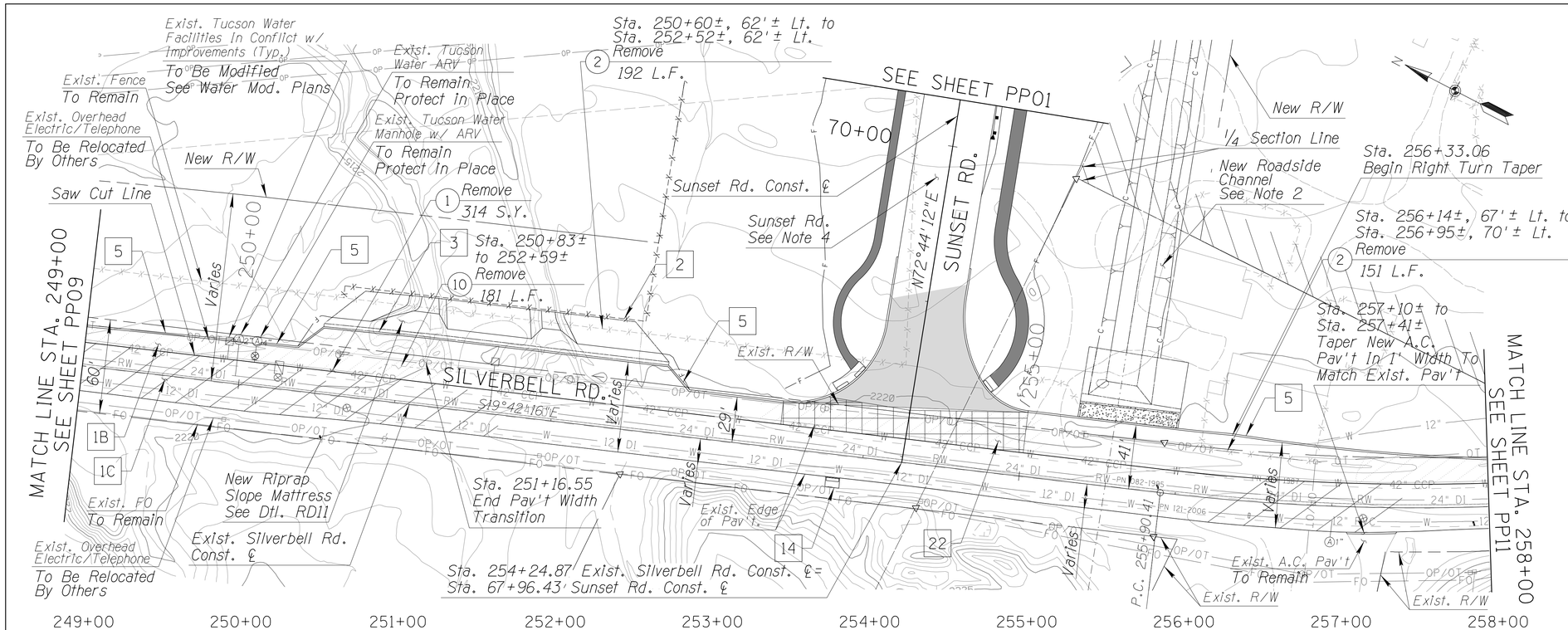

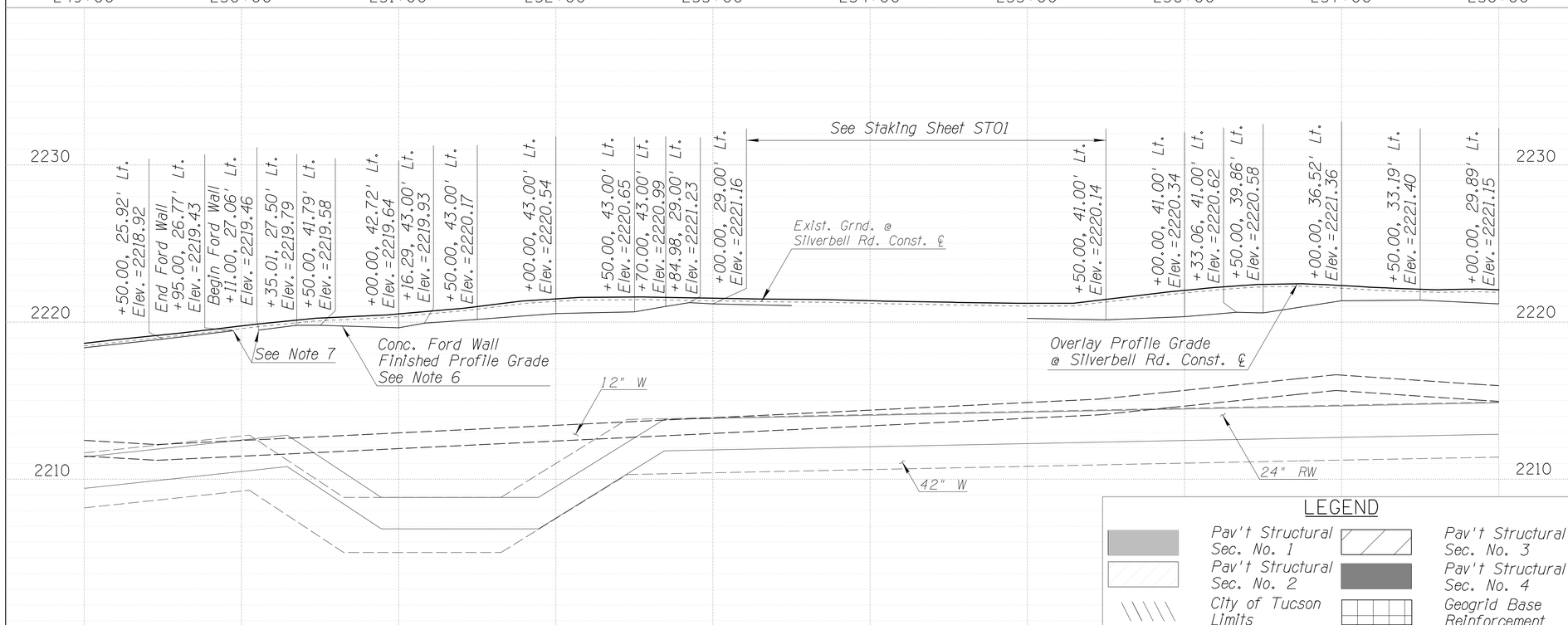

REMOVAL ITEMS (See Note 5)

(1) Remove Pavement. Total = 314 S.Y.

(2) Remove Fence. Total = 343 L.F.

(10) Remove Conc. Cutoff Wall. Total = 181 L.F.

NEW ITEMS

1 Pavement
- B Structural Section No. 2 Install 18,962 S.F.
- C Structural Section No. 3 Install 27,141 S.F.

2 Smooth Wire Game Fence, Dtl. RD13
Sta. 250+60±, 62'± Lt. to Sta. 250+60±, 70' Lt. to Sta. 252+52±, 70'± Lt.
Bid Item No. 9030310
Install 200 L.F.

3 Conc. Ford Wall (1'x6')
ADOT Std. Dwg. C-19.10
See Dtl. RD11
Sta. 250+62 to 252+38
Bid Item No. 9080506
Install 176 L.F.

5 Conc. Ford Wall (1'x2')
ADOT Std. Dwg. C-19.10
Sta. 249+00 to 249+95
Sta. 250+11 to 250+62
Sta. 252+38 to 253+45.59
Sta. 255+00.85 to 258+00
Bid Item No. 9080502
Install 558 L.F.
See Note 6

14 Conc. Landing w/ Detectable Warning Strip, See Dtl. RD02
Sta. 253+82.38, 15.06' Rt.
Bid Item No. 9080292
Install 1 EA.

22 Geogrid Base Reinforcement
Sta. 253+45 to 255+01
Bid Item No. 3060002
Install 350 S.Y.
See Note 8

NOTES:

1. For Horizontal Alignment Control see Sheet HC01.
2. For Roadside Channel Details see Sheet CD01.
3. For Pavement Marking and Signing Plans see Sheets PM05 to PM08.
4. For Sunset Road Plan & Profile see Sheets PP01 and PP02.
5. All removals shall be paid under Bid Item No. 2020001, Removal of Structures & Obstructions.
6. See staking information in profile view this sheet. Offset is at new edge of pavement. Elevations are at top of ford wall and account for 2.5" pavement overlay.
7. Transition top of ford wall to match elevation of existing Meter Box/ Manhole. Transition in 3' of ford wall length max. Feather new edge of pavement to match.
8. Install Geogrid on top of finished subgrade prior to the placement of aggregate base per Section 306 of the PAG Std. Specifications. See Section 1014-3 of the PAG Std. Specifications for Geogrid Materials Properties.

40' 0 40' 80'
SCALE: 1" = 40'

LEGEND

- Pav't Structural Sec. No. 1
- Pav't Structural Sec. No. 2
- City of Tucson Limits
- Pav't Structural Sec. No. 3
- Pav't Structural Sec. No. 4
- Geogrid Base Reinforcement

Scale: 1" = 40' Horiz. 1" = 4' Vert.

Sheet PP10 of PP12

Page 37 of 203

Pima County Department of Transportation

ROADWAY PLAN & PROFILE SHEET
SUNSET ROAD - SEGMENT I
SILVERBELL RD. TO I-10
STA. 249+00 TO 258+00
PROJECT NO. 4RTSUN

Priscilla S. Cornelio, P.E., Director

No.	Revision Description	Engineer	Date

		Date
Designed	MPK	11/15
Drawn	RM	11/15
Checked	CJR	11/15
Proj. Engr.	MPK	11/15

Registered Professional Engineer (Civil) CERTIFICATE NO. 40090 MATTHEW P. KERSHNER ARIZONA U.S.A. DATE SIGNED 11/13/15 EXPIRES 6-30-16

AECOM

TRANSPORTATION
AECOM USA, Inc.
5151 E. BROADWAY BLVD, SUITE 400
TUCSON, ARIZONA 85705
T 520.887.1800 F 520.887.8438
www.aecom.com

ARIZONA 811 BLUE STAKE, INC.
CALL 8 WORK DAYS BEFORE YOU DIG
(602) 263-1100
(800) 782-5348
WWW.BLUESTAKE.ORG

SUNSET ROAD - SILVERBELL ROAD TO I-10 - PROJECT NO. 4RTSUN

FILE NAME: P:\60311412 Sunset Rd\900-Work\910-CAD\20-SHEETS\4RTSUN_pl06_seg1.dgn DATE: 11/13/2015 TIME: 10:32:33 AM MurrietaR

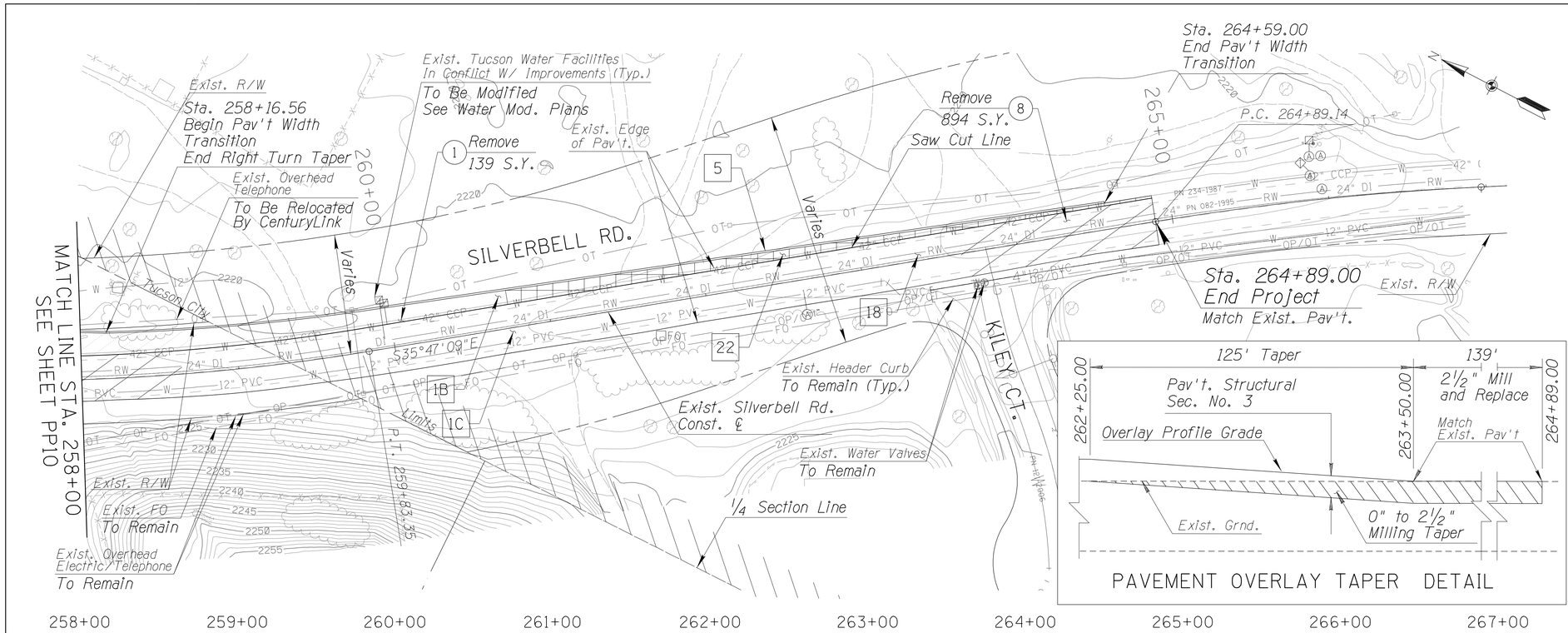

PAVEMENT OVERLAY TAPER DETAIL

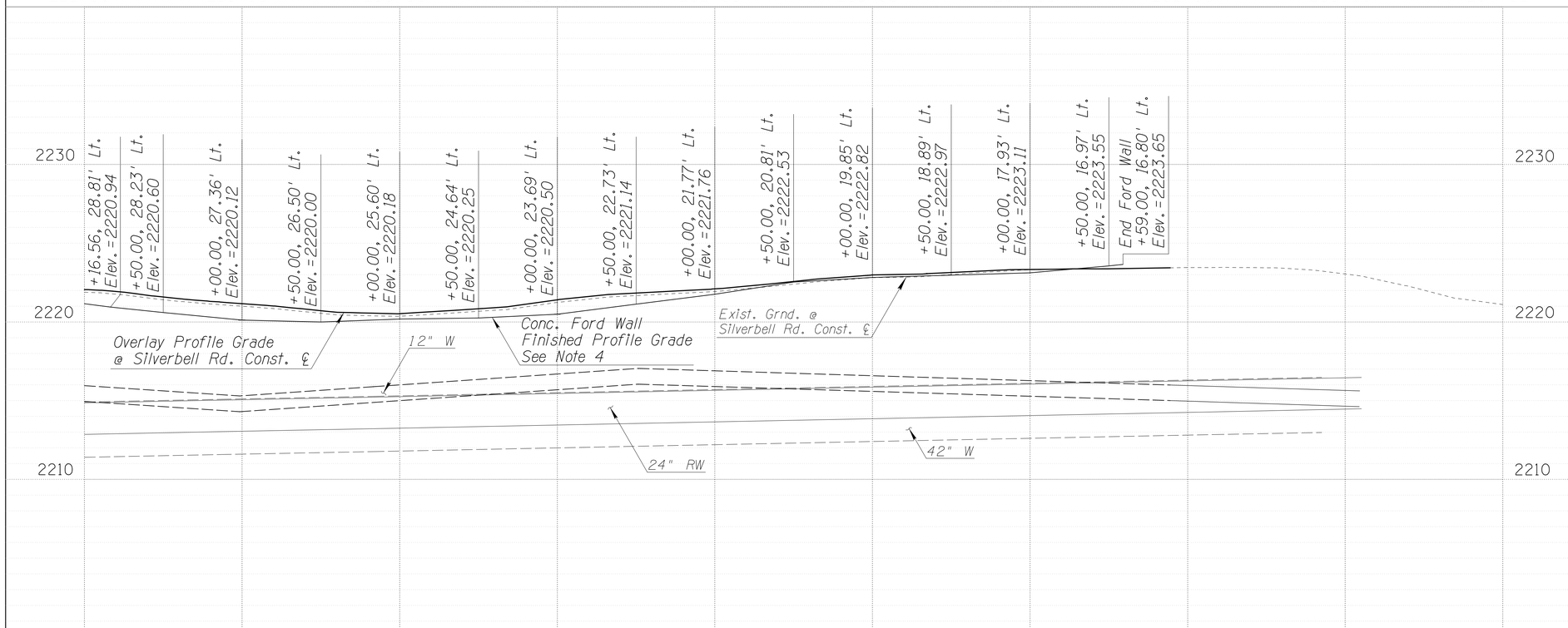

REMOVAL ITEMS *(See Note 3)*

1. Remove Pavement. Total=139 S.Y.
8. Mill. Total=894 S.Y. (See Pavement Overlay Taper Dtl. This Sheet)

NEW ITEMS

1 Pavement
- B Structural Section No. 2 Install 5,342 S.F.
- C Structural Section No. 3 Install 20,946 S.F.

5 Conc. Ford Wall (1'x2')
ADOT Std. Dwg. C-19.10
Sta. 258+00 to 264+59.00
Bid Item No. 9080502
Install 659 L.F.
See Note 4

18 Pavement Overlay Taper
See Dtl. This Sheet
Sta. 262+25.00 to 263+50.00

22 Geogrid Base Reinforcement
Sta. 260+75.00 to 264+89.00
Bid Item No. 3060002
Install 240 S.Y.
See Note 5

NOTES:

1. For Horizontal Alignment Control see Sheet HC01.
2. For Pavement Marking and Signing Plans see Sheets PM05 to PM08.
3. All removals shall be paid under Bid Item No. 2020001, Removal of Structures & Obstructions.
4. See staking information in profile view this sheet. Offset is at new edge of pavement. Elevations are at top of ford wall and account for 2.5" pavement overlay.
5. Install Geogrid on top of finished subgrade prior to the placement of aggregate base per Section 306 of the PAG Std. Specifications. See Section 1014-3 of the PAG Std. Specifications for Geogrid Materials Properties.

LEGEND

- Pav't Structural Sec. No. 2
- Pav't Structural Sec. No. 3
- Geogrid Base Reinforcement
- City of Tucson Limits

40' 0 40' 80'
SCALE: 1"=40'

Scale:	1"= 40' Horiz. 1"= 4' Vert.	Sheet PP11 of PP12	Page 38 of 203

Priscilla S. Cornelio, P.E., Director

No.	Revision Description	Engineer	Date

			Date
Designed	MPK		11/15
Drawn	RM		11/15
Checked	CJR		11/15
Proj. Engr.	MPK		11/15

Registered Professional Engineer (Civil) CERTIFICATE NO. 32197 MATTHEW P. KERSHNER EXPIRES 6-30-16 DATE 11/16/15

AECOM
TRANSPORTATION
AECOM USA, Inc.
5151 E. BROADWAY BLVD, SUITE 400
TUCSON, ARIZONA 85705
T 520.887.1800 F 520.887.8438
www.aecom.com

ARIZONA 811 BLUE STAKE, INC.
CALL 8 WORK DAYS BEFORE YOU DIG
1-800-782-5348
WWW.BLUESTAKE.ORG

Pima County Department of Transportation

ROADWAY PLAN & PROFILE SHEET
SUNSET ROAD - SEGMENT 1
SILVERBELL RD. TO I-10
STA. 258+00 TO STA. 264+59
PROJECT NO. 4RTSUN

SUNSET ROAD – SILVERBELL ROAD TO I-10 – PROJECT NO. 4RTSUN

FILE NAME: P:\60311412 Sunset Rd\900-Work\910-CAD\20-SHEETS\4RTSUN_pl07_seg1.dgn DATE: 11/16/2015 TIME: 10:36:42 AM MurrietaR

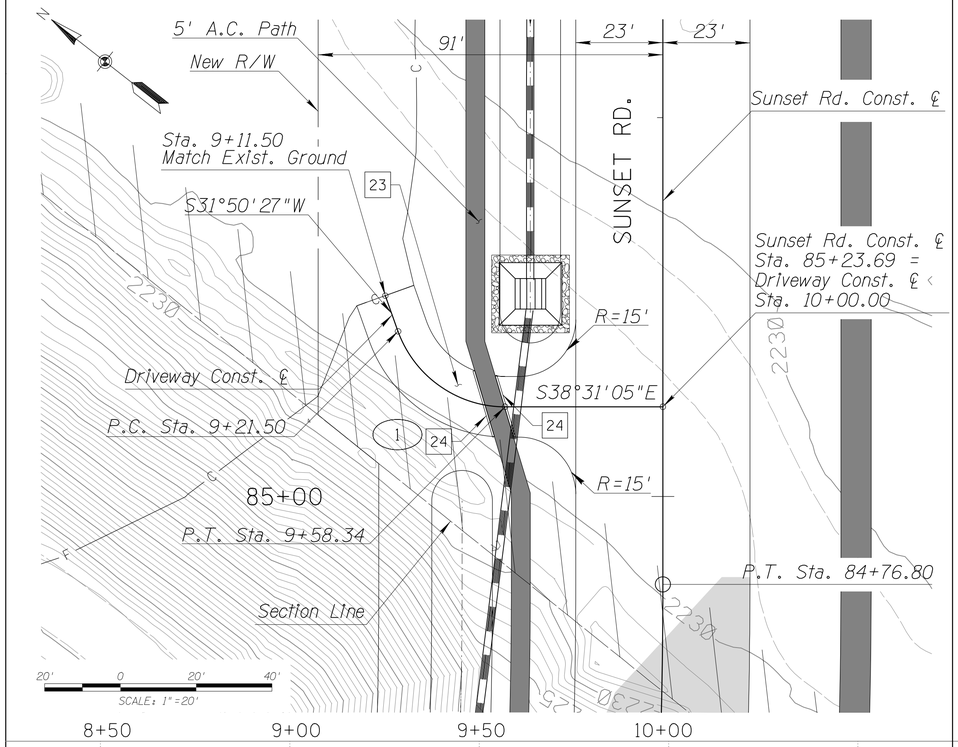

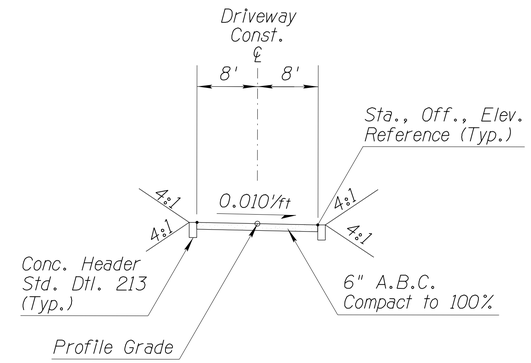

DRIVEWAY TYPICAL SECTION

Looking Upstation

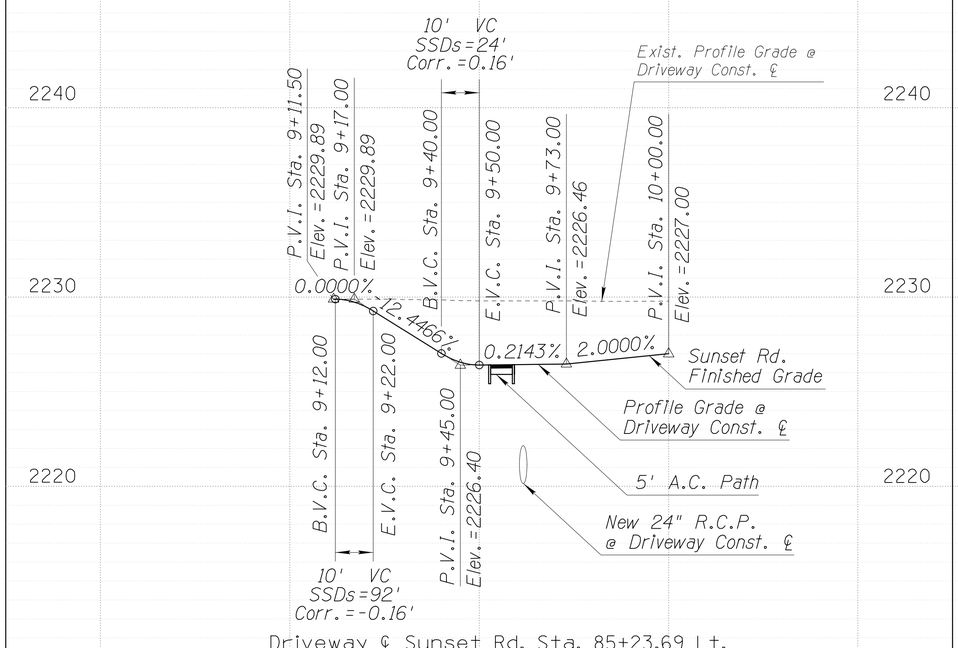

Driveway ℄ Sunset Rd. Sta. 85+23.69 Lt.

(1) CURVE DATA
P.I. Sta. 9+42.65
Δ= 70°21'33" Lt.
D= 190°59'09"
T= 21.15'
L= 36.84'
R= 30.00'

23 Aggregate Base Course (A.B.C.)
Bid Item No. 3030003
Install 20 C.Y.

24 Conc. Header (6"X12")
Std. Dtl. 213
Sta. 85+15.79, 44.46' Lt.,
Elev.=2226.34
to Sta. 85+33.20, 49.68' Lt.,
Elev.=2226.54
Sta. 85+15.69, 39.43' Lt.,
Elev.=2226.35
to Sta. 85+31.84, 44.28' Lt.,
Elev.=2226.50
Bid Item No. 9080402
Install 35 L.F.

LEGEND

- Pav't Structural Sec. No. 1
- Pav't Structural Sec. No. 4
- ADOT New Access Control
- City of Tucson Limits

Scale:	1" = 20' Horiz. 1" = 4' Vert.	Sheet PP12 of PP12	Page 39 of 203

Priscilla S. Cornelio, P.E., Director

No.	Revision Description	Engineer	Date

		Date
Designed	MPK	11/15
Drawn	MPK	11/15
Checked	CJR	11/15
Proj. Engr.	MPK	11/15

Registered Professional Engineer (Civil) CERTIFICATE NO. 40090 MATTHEW P. KERSHNER STATE OF ARIZONA DATE SIGNED 11/13/15 EXPIRES 6-30-16

AECOM

TRANSPORTATION

AECOM USA, Inc.
3555 E. PATERNOSTER RD., SUITE 400
TUCSON, ARIZONA 85705
T 520.887.1800 F 520.887.9438

www.aecom.com

CALL AT LEAST TWO FULL WORKING DAYS BEFORE YOU DIG
ARIZONA 811
BLUE STAKE, INC.
(602) 263-1100 (800) 782-5348

Pima County Department of Transportation

DRIVEWAY PLAN & PROFILE SHEET
SUNSET ROAD - SEGMENT 1
SILVERBELL RD. TO I-10

PROJECT NO. 4RTSUN

SUNSET ROAD - SILVERBELL ROAD TO I-10 - PROJECT NO. 4RTSUN

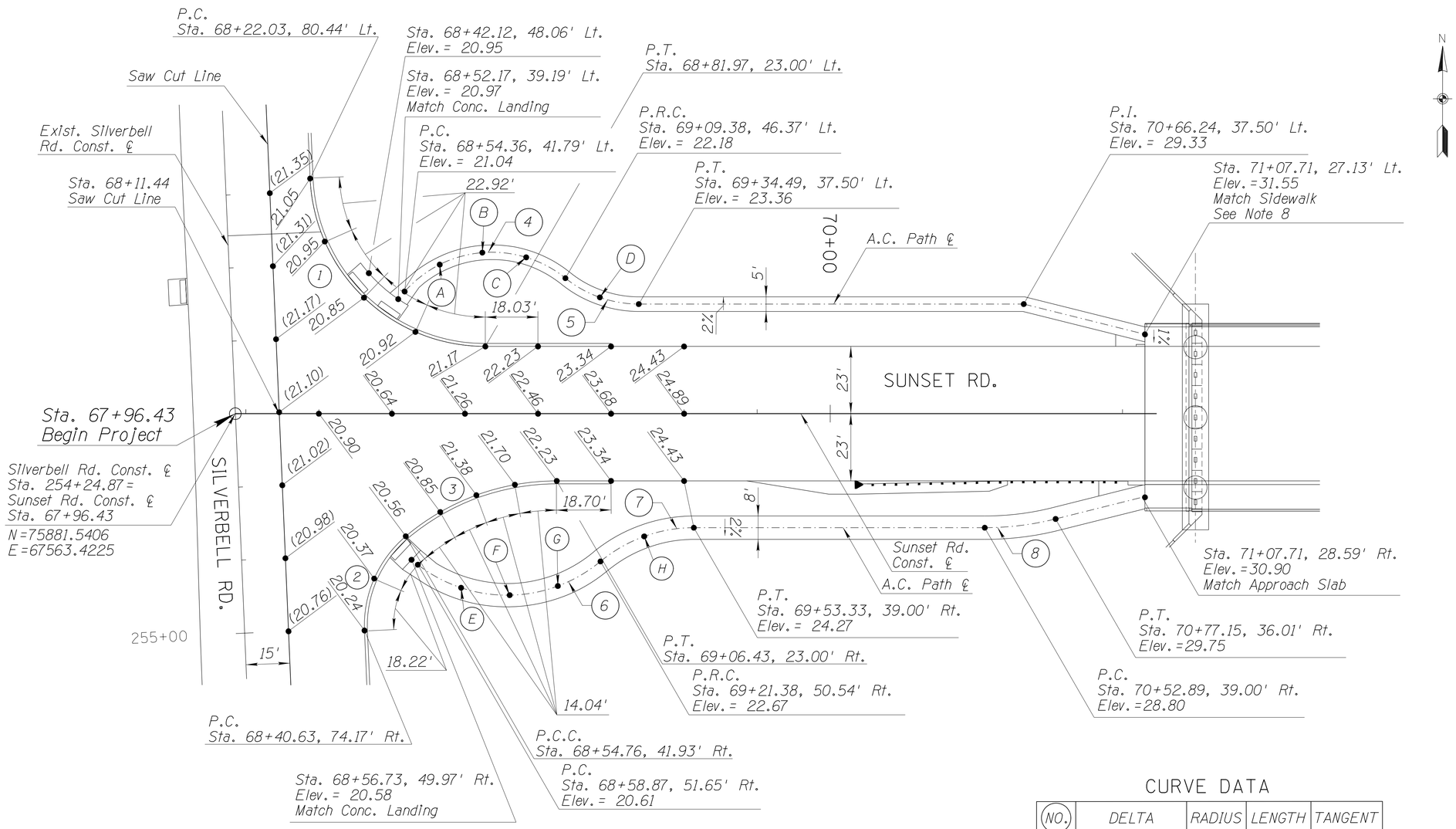

NOTES:

1. All stations and offsets are referenced from Sunset Rd. Const. ℄.
2. Base elevation=2200.00.
3. Elevations denoted in parentheses refer to existing pavement + 2.5" to account for pavement overlay.
4. Elevations shown are to finish grade of pavement at edge of pavement.
5. Elevations are located at 25' intervals along Sunset Rd. unless otherwise noted.
6. Dimensions along curb returns are measured at edge of pavement.
7. Elevations shown at Sunset Rd. Const. ℄ are from the profile gradeline.
8. Transition path cross slope to match bridge from Sta. 70+90.00 to Sta. 71+07.71.
9. See Dtl. RD02 for elevations at the center of the concrete landings.

POINT DATA

(X)	STATION	OFFSET	ELEVATION
A	68+66.37	51.00' Lt.	20.65
B	68+80.96	55.09' Lt.	20.87
C	68+95.97	53.48' Lt.	21.45
D	69+21.18	39.78' Lt.	22.75
E	68+73.69	59.56' Rt.	20.40
F	68+90.32	62.07' Rt.	21.11
G	69+06.79	58.95' Rt.	21.89
H	69+36.35	41.97' Rt.	23.47

CURVE DATA

(NO.)	DELTA	RADIUS	LENGTH	TANGENT
1	87°33'32" Lt	60.00'	91.69'	57.50'
2	52°12'33" Rt	40.00'	36.45'	19.60'
3	40°13'55" Rt	80.00'	56.17'	29.30'
4	88°11'34" Rt	40.00'	61.57'	38.76'
5	38°53'23" Lt	40.00'	27.15'	14.12'
6	76°26'19" Lt	50.00'	66.71'	39.37'
7	39°43'01" Rt	50.00'	34.66'	18.06'
8	14°02'10" Lt	100.00'	24.50'	12.31'

20' 0 20' 40'
SCALE: 1" =20'

Priscilla S. Cornelio, P.E., Director

			Date
Designed	MPK		11/15
Drawn	RM		11/15
Checked	CJR		11/15
Proj. Engr.	MPK		11/15

No.	Revision Description	Engineer	Date

Registered Professional Engineer (Civil) CERTIFICATE NO. 40590 MATTHEW P. KERSHNER DATE SIGNED 9/17/15 EXPIRES 6-30-16

AECOM
TRANSPORTATION
AECOM USA, Inc.
2840 E. Skyline Dr., Ste. 400
Tucson, Arizona 85705
T 520.887.1800 F 520.887.8438
www.aecom.com

Call at least two full working days before you begin excavation
ARIZONA 811 BLUE STAKE, INC.
Arizona Law requires 2 working days notice before excavation. Call Blue Stake, Inc. at 602-263-1100 or 1-800-782-5348

Pima County Department of Transportation

GEOMETRIC DATA & STAKING SHEET
SUNSET ROAD - SEGMENT 1
SILVERBELL RD. TO I-10

PROJECT NO. 4RTSUN

SUNSET ROAD - SILVERBELL ROAD TO I-10 - PROJECT NO. 4RTSUN

Scale:	1"=20' Horiz.	Sheet ST01 of ST02	Page 40 of 203

FILE NAME: P:\60311412 Sunset Rd\900-Work\910-CAD\20-SHEETS\4RTSUN_st01_seg1.dgn DATE: 11/13/2015 TIME: 10:35:39 AM MurrietaR

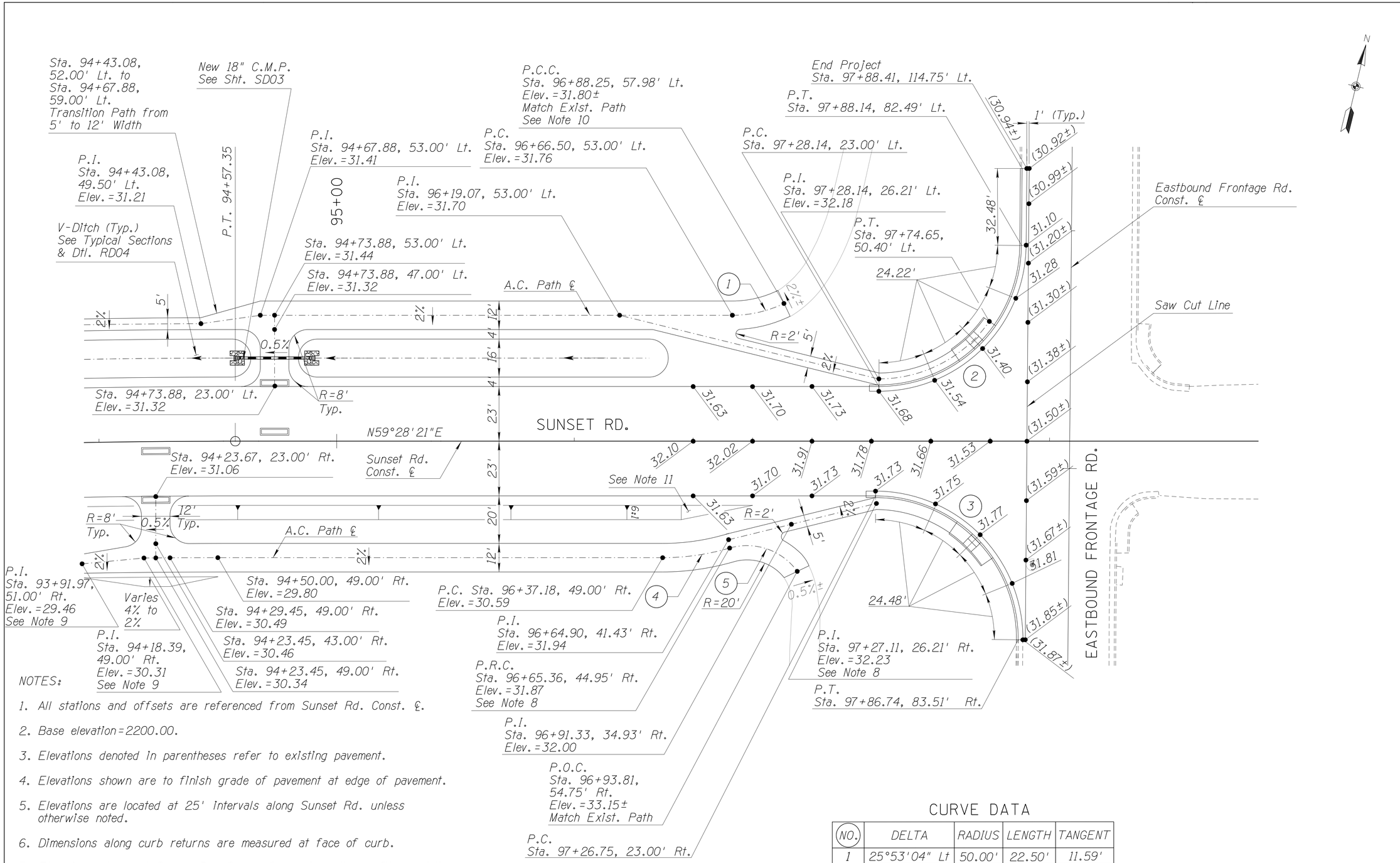

NOTES:

1. All stations and offsets are referenced from Sunset Rd. Const. ℄.
2. Base elevation=2200.00.
3. Elevations denoted in parentheses refer to existing pavement.
4. Elevations shown are to finish grade of pavement at edge of pavement.
5. Elevations are located at 25' intervals along Sunset Rd. unless otherwise noted.
6. Dimensions along curb returns are measured at face of curb.
7. Elevations shown at Sunset Rd. Const. ℄ are from the profile gradeline.
8. Transition path cross slope from Sta. 96+65.36 to Sta. 96+93.81.
9. Transition path width from 8' to 12'.
10. Transition path cross slope from Sta. 96+66.50 to Sta. 96+88.25.
11. Sta. 96+45.00 to 96+75.00 6:1 to Flat Transition See Typical Sections

CURVE DATA

NO.	DELTA	RADIUS	LENGTH	TANGENT
1	25°53'04" Lt	50.00'	22.50'	11.59'
2	89°31'03" Lt	60.00'	93.74'	59.50'
3	90°28'55" Rt	60.00'	94.75'	60.51'
4	16°21'56" Lt	100.00'	28.56'	14.38'
5	70°43'35" Rt	26.00'	32.09'	18.45'

20' 0 20' 40'
SCALE: 1"=20'

Priscilla S. Cornelio, P.E. Director

Designed	MPK
Drawn	RM
Checked	CJR
Proj. Engr.	MPK

Date 11/15

No.	Revision Description	Engineer	Date

Registered Professional Engineer (Civil) CERTIFICATE NO. 13462 CHARLES J. ROBINSON Arizona U.S.A. EXPIRES 3-31-2017

AECOM
TRANSPORTATION
AECOM USA, Inc.
4625 E. Broadway Blvd., SUITE 400
Tucson, Arizona 85705
T 520.887.7800 F 520.887.8438
www.aecom.com

Call at least two full working days before you dig in Arizona
ARIZONA811
BLUE STAKE, INC.
Arizona Underground Protection Center

Pima County Department of Transportation

GEOMETRIC DATA & STAKING SHEET
SUNSET ROAD - SEGMENT 1
SILVERBELL RD. TO I-10

PROJECT NO. 4RTSUN

SUNSET ROAD – SILVERBELL ROAD TO I-10 – PROJECT NO. 4RTSUN

Scale: 1"=20' Horiz. | Sheet ST02 of ST02 | Page 41 of 203

FILE NAME: P:\60311412 Sunset Rd\900-Work\910-CAD\20-SHEETS\4RTSUN_st02_segl.dgn DATE: 11/16/2015 TIME: 10:34:20 AM MurrietaR

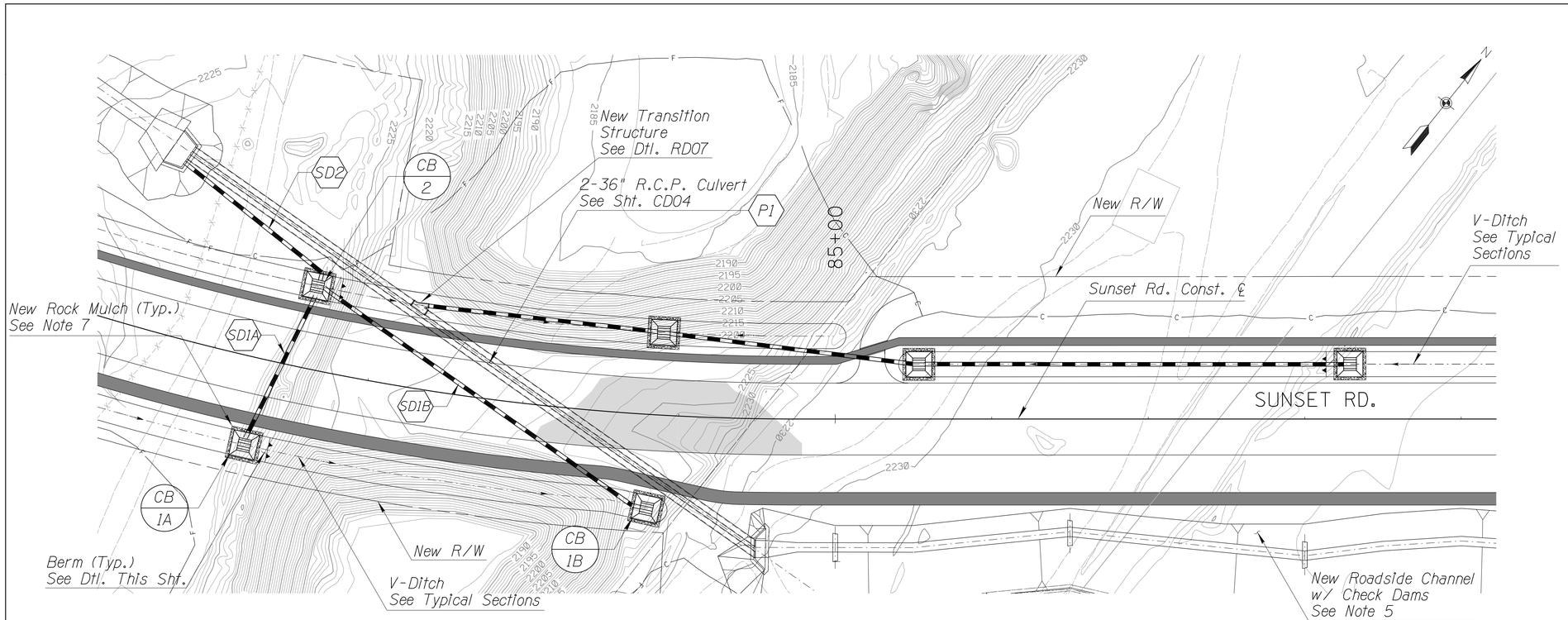

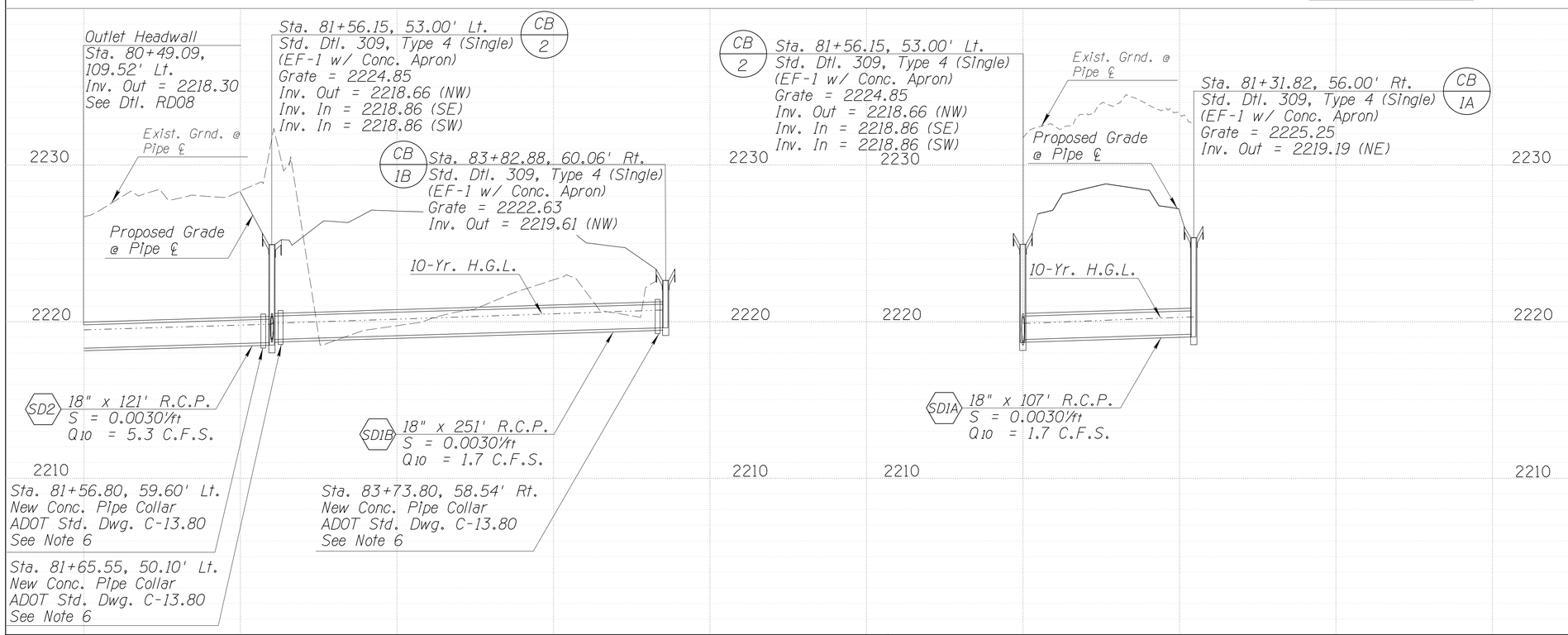

NOTES:

1. All stations and offsets are referenced from the Sunset Rd. Const. ℄.
2. See Pipe and Catch Basin Summary Sheet SB02.
3. For Horizontal Alignment Control see Sheet HC01.
4. For Roadway Plans & Profiles see Sheets PP01 to PP08.
5. For Culvert Plan & Profile and Roadside Channel Details see Sheets CD04 and CD05.
6. The pipe stub between the catch basin and concrete pipe collar shall be 3' as shown on ADOT Std. Dwg. C-13.80. The cost for the concrete pipe collar shall be incidental and included in the payment for the pipe.
7. Place Gradation C Rock Mulch around Catch Basin Apron (2' x Perimeter), T=6". See Dtl. ES1 for Gradation. Color will be Apache Brown or approved equal. Bid Item No. 8030029 Install 9 C.Y. (Total)

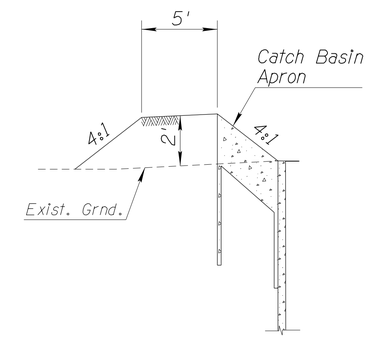

BERM DETAIL

N.T.S.

LEGEND

Pav't Structural Sec. No. 1

Pav't Structural Sec. No. 4

40' 0 40' 80'

SCALE: 1"=40'

Scale:	1"= 40' Horiz. 1"= 4' Vert.	Sheet SD01 of SD03	Page 42 of 203

Priscilla S. Cornelio, P.E., Director

No.	Revision Description	Engineer	Date

			Date
Designed	MPK		11/15
Drawn	MPK		11/15
Checked	CJR		11/15
Proj. Engr.	MPK		11/15

Registered Professional Engineer (Civil) CERTIFICATE NO. 40090 MATTHEW P. KERSNER STATE OF ARIZONA DATE SIGNED 11/16/15 EXPIRES 6-30-16

AECOM

TRANSPORTATION

AECOM USA, Inc.
ASL LEARNING CTR, SUITE 400
TUCSON, ARIZONA 85705
T 520.887.1800 F 520.887.8438

www.aecom.com

Pima County Department of Transportation

STORM DRAIN PLAN & PROFILE SHEET
SUNSET ROAD - SEGMENT 1
SILVERBELL RD. TO I-10
STA. 76+00 TO STA. 84+00
PROJECT NO. 4RTSUN

SUNSET ROAD – SILVERBELL ROAD TO I-10 – PROJECT NO. 4RTSUN

FILE NAME: P:\60311412 Sunset Rd\900-Work\910-CAD\20-SHEETS\4RTSUN_sd01_seg1.dgn DATE: 11/16/2015 TIME: 9:15:16 AM MurrietaR

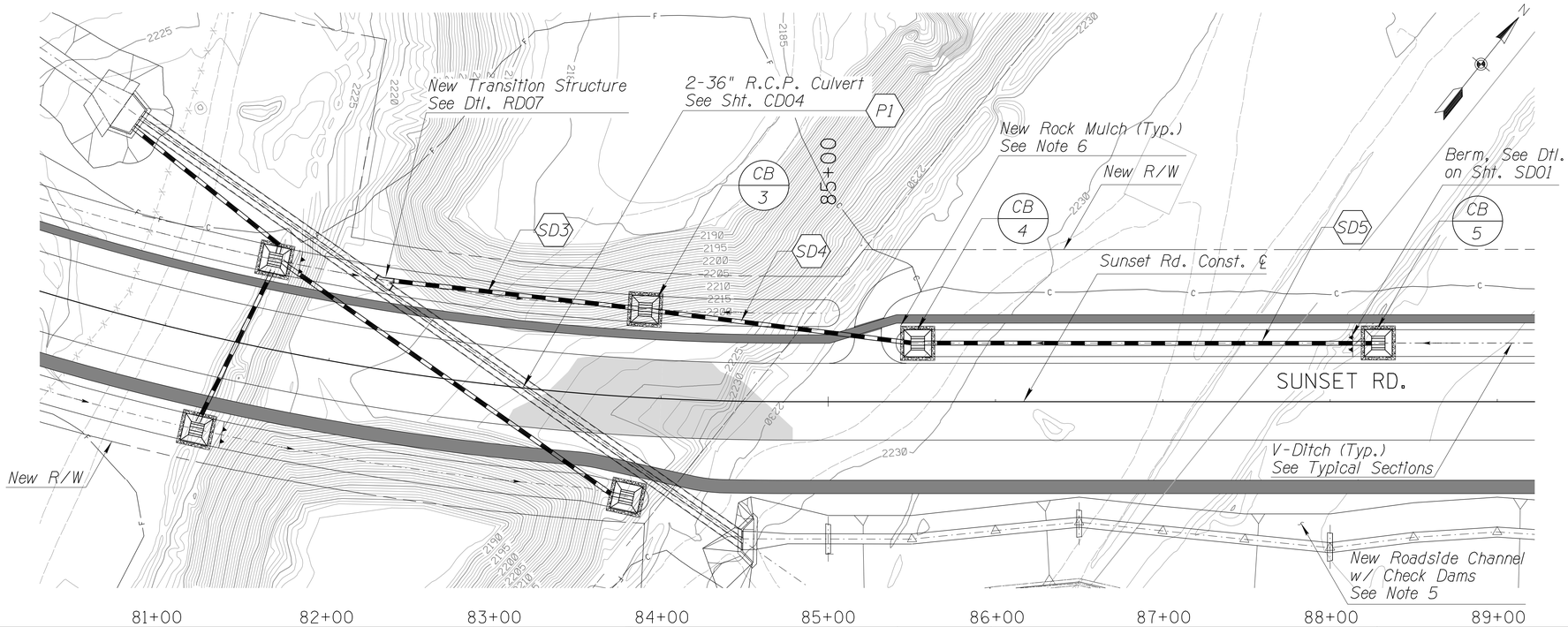

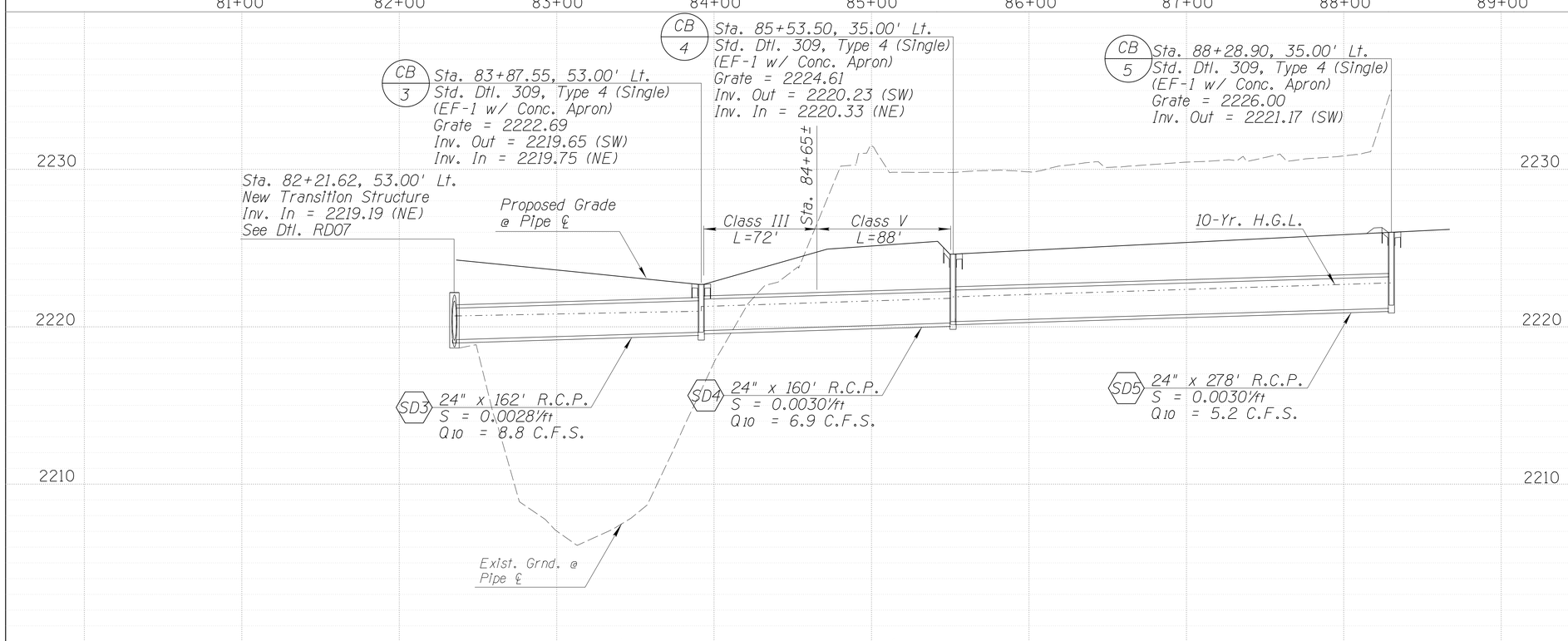

NOTES:

1. All stations and offsets are referenced from the Sunset Rd. Const. ℄.
2. See Pipe and Catch Basin Summary Sheet SB02.
3. For Horizontal Alignment Control see Sheet HC01.
4. For Roadway Plans & Profiles see Sheets PP01 to PP08.
5. For Culvert Plan & Profile and Roadside Channel Details see Sheets CD04 and CD05.
6. Place Gradation C Rock Mulch around Catch Basin Apron (2' x Perimeter), T=6". See Dtl. ES1 for Gradation. Color will be Apache Brown or approved equal. Bid Item No. 8030029 Install 9 C.Y. (Total)

LEGEND

Pav't Structural Sec. No. 1

Pav't Structural Sec. No. 4

40' 0 40' 80'
SCALE: 1"=40'

Scale: 1"= 40' Horiz. 1"= 4' Vert.

Sheet SD02 of SD03

Page 43 of 203

Priscilla S. Cornelio, P.E., Director

Designed	EGM	11/15
Drawn	MPK	11/15
Checked	MPK	11/15
Proj. Engr.	MPK	11/15

No.	Revision Description	Engineer	Date

Registered Professional Engineer (Civil) CERTIFICATE NO. 40090 MATTHEW P. KERSHNER STATE OF ARIZONA DATE SIGNED 11/16/15 EXPIRES 6-30-16

AECOM

TRANSPORTATION

AECOM USA, Inc.
5151 SHAFER AVENUE, SUITE 400
TUCSON, ARIZONA 85706
T 520.887.1800 F 520.887.9438

www.aecom.com

ARIZONA811 BLUE STAKE, INC.
Call at least two full working days before you begin excavation
Visit Blue Stake, Inc. at www.azbluestake.com

Pima County Department of Transportation

STORM DRAIN PLAN & PROFILE SHEET
SUNSET ROAD - SEGMENT 1
SIL VERBELL RD. TO I-10
STA. 78+00 TO STA. 84+00
PROJECT NO. 4RTSUN

SUNSET ROAD – SILVERBELL ROAD TO I-10 – PROJECT NO. 4RTSUN

FILE NAME: P:\60311412 Sunset Rd\900-Work\910-CAD\20-SHEETS\4RTSUN_sd02_segl.dgn DATE: 11/16/2015 TIME: 9:16:06 AM MurrietaR

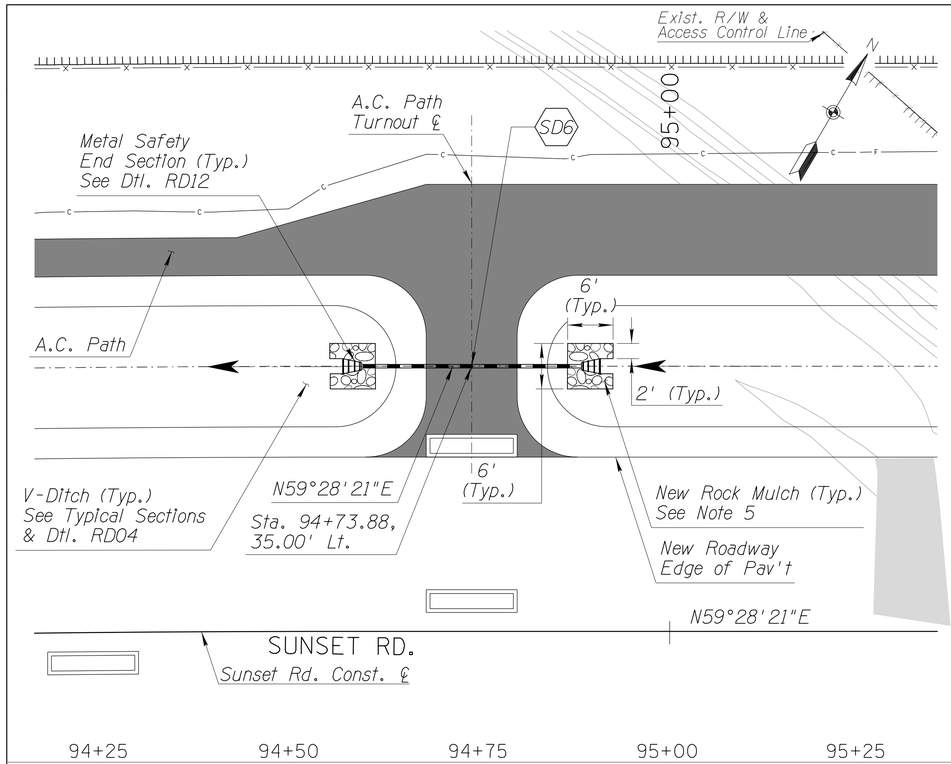

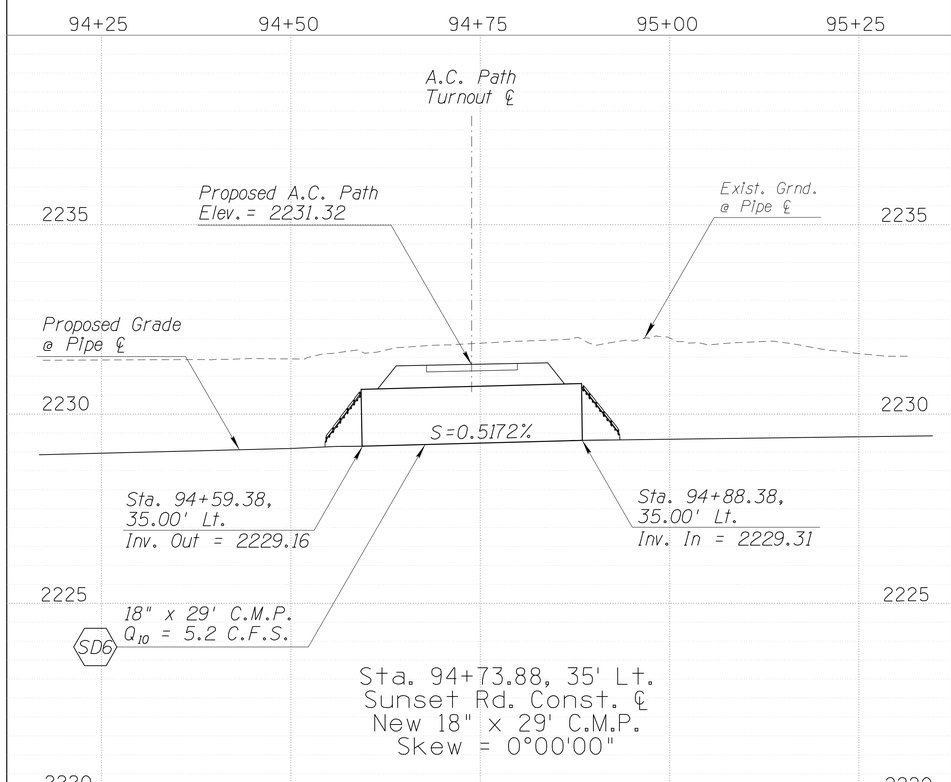

NOTES:

1. All stations and offsets are referenced from the Sunset Rd. Const. ℄.
2. See Pipe and Catch Basin Summary Sheet SB02.
3. For Horizontal Alignment Control see Sheet HC01.
4. For Roadway Plans & Profiles see Sheets PP01 to PP08.
5. Place Gradation C Rock Mulch around Pipe, T=6". See Dtl. ES1 for Gradation. Color will be Apache Brown or approved equal. Bid Item No. 8030029 Install 1 C.Y.

LEGEND

- Pav't Structural Sec. No. 1
- Pav't Structural Sec. No. 4
- ADOT New Access Control

10' 0 10' 20'
SCALE: 1"=10'

Designed	MPK
Drawn	RAM
Checked	CJR
Proj. Engr.	MPK

No.	Revision Description	Engineer	Date

Priscilla S. Cornelio, P.E., Director

Pima County Department of Transportation

STORM DRAIN PLAN & PROFILE SHEET
SUNSET ROAD - SEGMENT 1
SILVERBELL RD. TO I-10
STA. 76+00 TO STA. 84+00
PROJECT NO. 4RTSUN

AECOM
TRANSPORTATION
AECOM USA, Inc.
5151 E. BROADWAY BLVD. SUITE 400
TUCSON, ARIZONA 85705
T 520.887.1800 F 520.887.8438
www.aecom.com

SUNSET ROAD – SILVERBELL ROAD TO I-10 – PROJECT NO. 4RTSUN

Scale: 1"= 10' Horiz. 1"= 2' Vert. | Sheet SD03 of SD03 | Page 44 of 203

FILE NAME: P:\60311412 Sunset Rd\900-Work\910-CAD\20-SHEETS\4RTSUN_sd03_seg1.dgn DATE: 11/16/2015 TIME: 9:39:09 AM MurrietaR

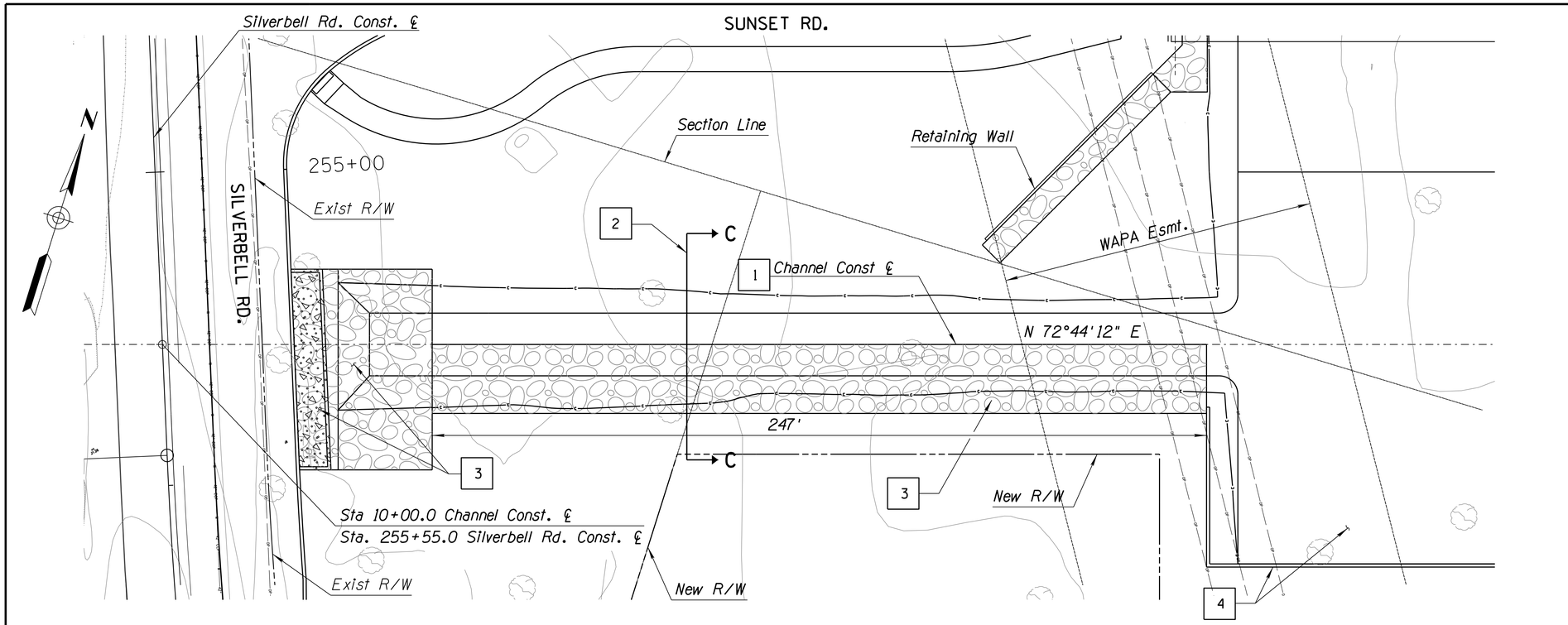

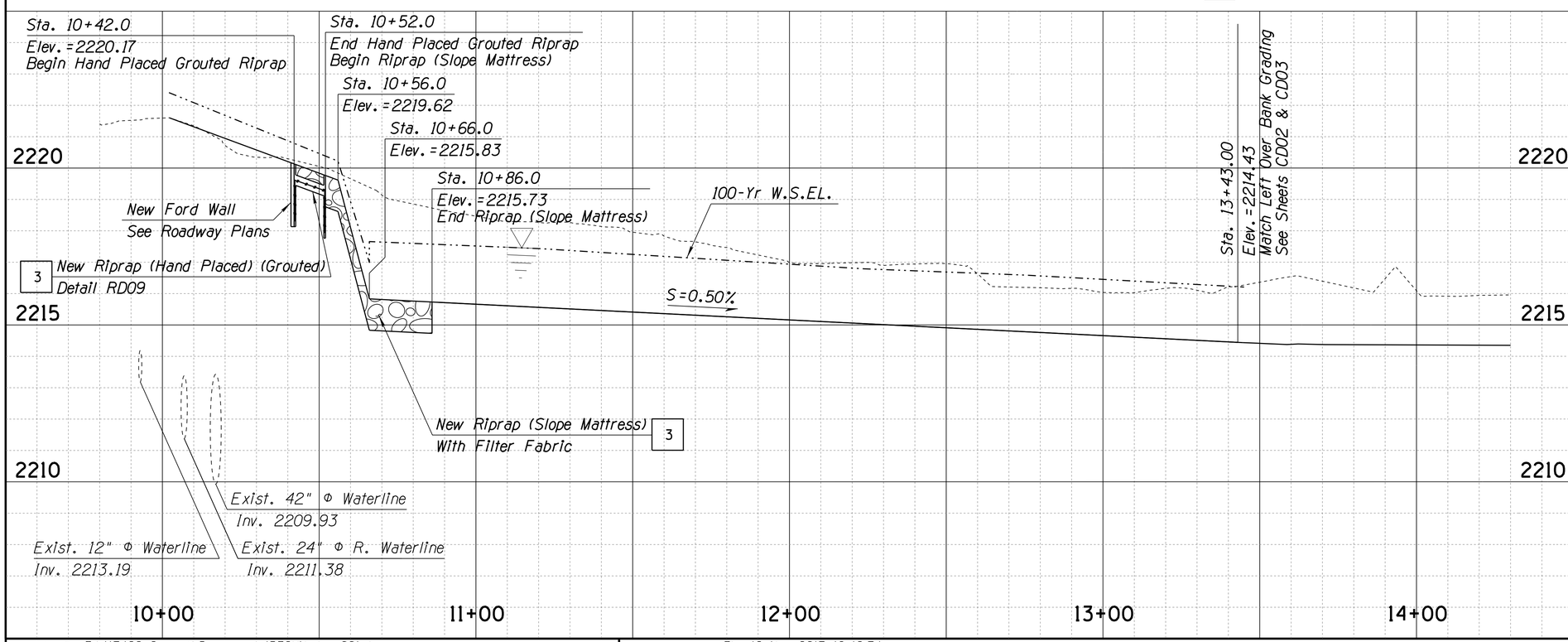

Notes:

1. Channel Const. ℄
   615 C.Y. Drainage Excavation
   To Be Paid Under Bid Item
   No. 2030401

2. Channel Typical Section
   See Section C-C, Detail RD09

3. 275 C.Y. New Riprap
   (Slope Mattress), Detail RD09.
   Will Be Paid Under Bid Item No.
   9130004

   72 S.Y. New Riprap
   (Hand Placed) (Grouted), Detail
   RD09 Will Be Paid Under Bid
   Item No. 9130009.

   Riprap (Slope Mattress) & Riprap
   (Hand Placed) (Grouted) Color
   Shall Be Similar To Color
   Selected for Item 8030029,
   Rock Mulch. See Landscape
   Plans.

4. Left Overbank Grading
   & Conc. Ford Wall
   See Sheets CD02 & CD03
   And Conc. Ford Wall

SCALE: 1" = 20'

Pima County Department of Transportation

Priscilla S. Cornelio, P.E., Director

Designed	GB	11/15
Drawn	CPC	11/15
Checked	JJK	11/15
Proj. Engr.	GB	11/15

No.	Revision Description	Engineer	Date

Registered Professional Engineer (Civil) CERTIFICATE NO. 37844 GREGORY ALLEN BAMBAUER Date Signed 11/17/15 ARIZONA, U.S.A. Expires 09/30/2017

PARSONS BRINCKERHOFF
177 N. CHURCH AVE., STE. 610
TUCSON, AZ. 85701
(520) 882-6424

Arizona Blue Stake, Inc. 1-800-STAKE-IT (1-800-782-5348) Call 2 Working Days Before You Dig

WEST ROADSIDE CHANNEL
SUNSET ROAD - SEGMENT I
SILVERBELL RD. TO I-10

PROJECT NO. 4RTSUN

SUNSET ROAD – SILVERBELL ROAD TO I-10 – PROJECT NO. 4RTSUN

Scale:	1"=20' Horiz.	Sheet CD01 of CD06	Page 45 of 203

FILE NAME: T:\11542C Sunset\Drainage\4RTSUN_drn_001.dgn

Thu 12 Nov 2015, 16:49:54

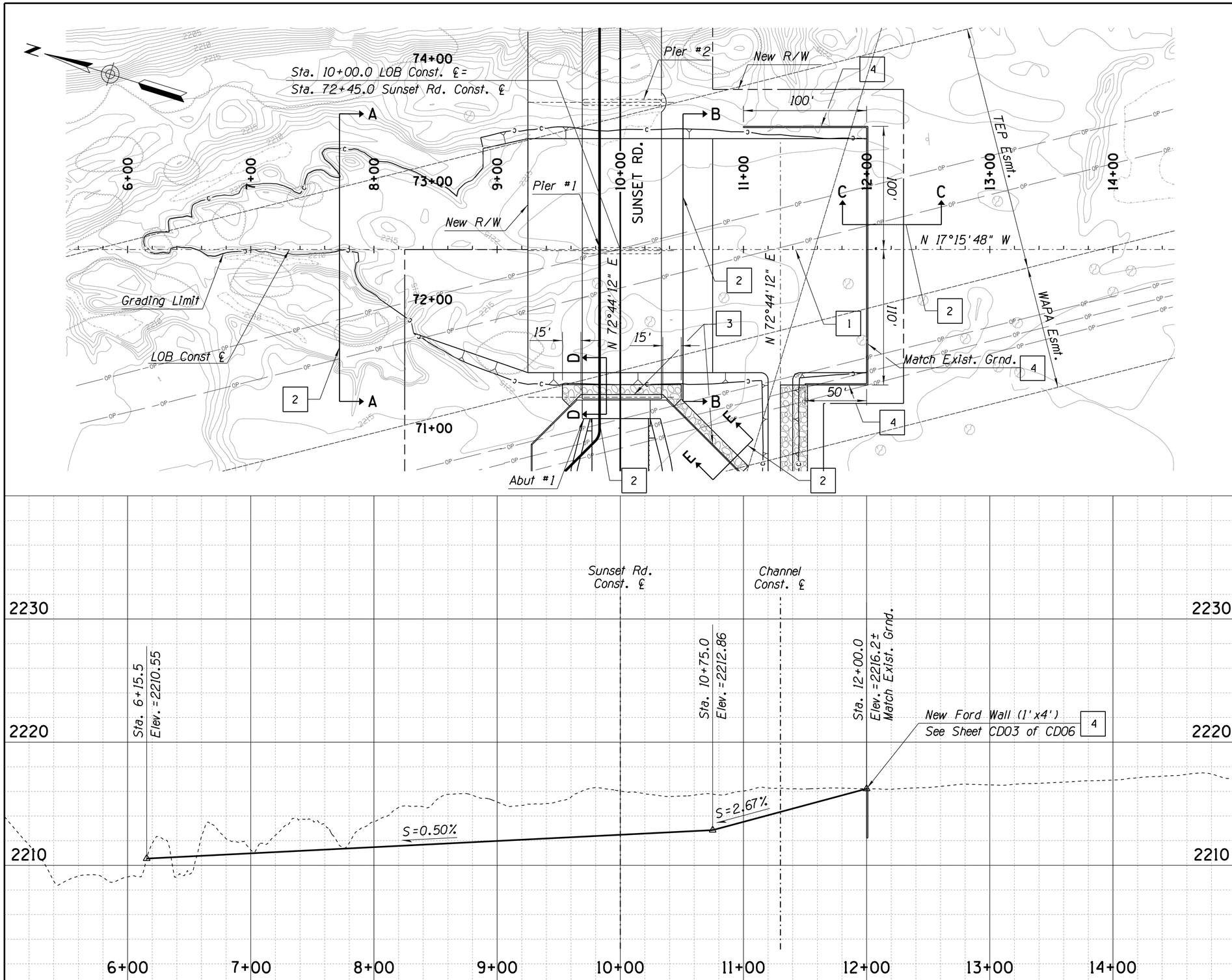

Notes:

1. Channel Const ℄ 7645 C.Y. Drainage Excavation To Be Paid Under Bid Item No. 2030401
2. Channel Typical Sections See Left Overbank Grading Sheet CD03
3. Sta 71+31.3, 46.9' Lt to Sta 71+31.3, 49.5' Rt 155 C.Y. Dumped Riprap D_{50}= 18", See Gradation & Section D-D, Sheet CD03

   Sta 70+66.3, 101.1' Rt to Sta 71+20.8, 46.7' Rt 40 C.Y. Dumped Riprap D_{50}= 6", See Gradation & Section E-E, Sheet CD03

   Riprap (Dumped) To Be Paid Under Bid Item No. 9130001 Color Shall Match Color Selected for Item 8030029 Rock Mulch, See Landscape Plans
4. 360 L.F. New Conc. Ford Wall (1'X 4') ADOT Std. Dwg. C-19.10 Omit Depth Gauge Installation. To Be Paid Under Bid Item No. 9080504

40' 0 40' 80'
SCALE: 1"=40'

No.	Revision Description	Engineer	Date

		Date
Designed	GB	11/15
Drawn	CPC	11/15
Checked	JJK	11/15
Proj. Engr.	GB	11/15

Priscilla S. Cornelio, P.E., Director

Pima County Department of Transportation

Registered Professional Engineer (Civil) CERTIFICATE NO. 37644 GREGORY ALLEN BAMBAUER Date Signed 09/30/2017 ARIZONA U.S.A. Expires 09/30/2017

PARSONS BRINCKERHOFF
177 N. CHURCH AVE., STE. 610
TUCSON, AZ. 85701
(520) 882-6424

Arizona Blue Stake
1-800-STAKE-IT
(Outside Maricopa County)

LEFT OVERBANK GRADING
SUNSET ROAD - SEGMENT 1
SILVERBELL RD. TO I-10

PROJECT NO. 4RTSUN

SUNSET ROAD – SILVERBELL ROAD TO I-10 – PROJECT NO. 4RTSUN

Scale: 1"=40' Horiz. | Sheet CD02 of CD06 | Page 46 of 203

FILE NAME: T:\11542C Sunset\Drainage\4RTSUN_drn_002.dgn

Thu 12 Nov 2015, 16:50:05

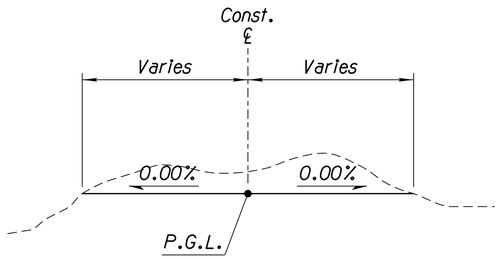

SECTION A-A

Sta. 6+15 to Sta. 8+30

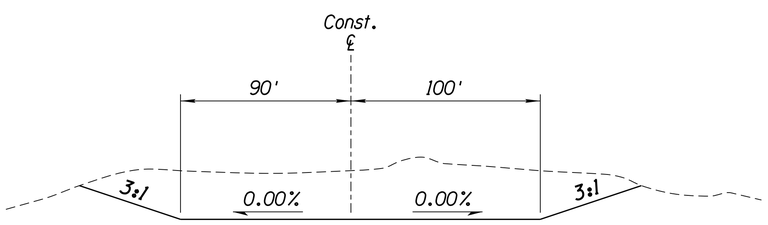

SECTION B-B

Sta. 8+90 to Sta. 12+00

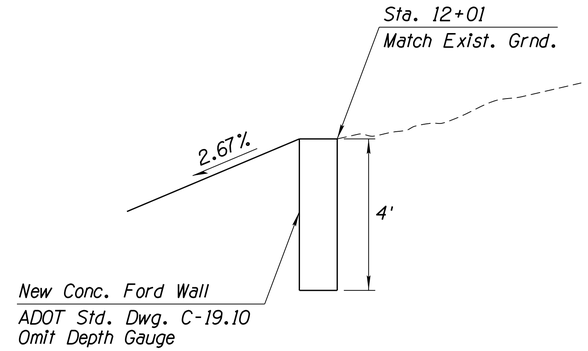

SECTION C-C

Ford Wall

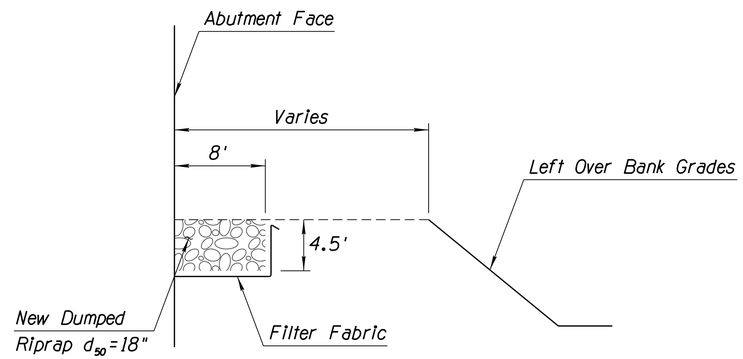

SECTION D-D

Abutment Scour Countermeasure

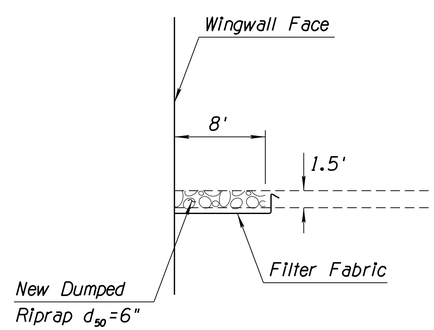

SECTION E-E

Retaining Wall Scour Countermeasure

GRADATION 18"	
% Passing	Size (in)
100-90	36"
85-70	27"
50-30	18"
15-5	12"
5-0	6"

GRADATION D =6"	
% Passing	Size (in)
100-90	12"
85-70	9"
50-30	6"
15-5	4"
5-0	2"

Pima County Department of Transportation

Priscilla S. Cornelio, P.E., Director

No.	Revision Description	Engineer	Date

		Date
Designed	GB	11/15
Drawn	CPC	11/15
Checked	JJK	11/15
Proj. Engr.	GB	11/15

Registered Professional Engineer (Civil) CERTIFICATE NO. 37844 GREGORY ALLEN BAMBAUER Date Signed 11/12/15 ARIZONA U.S.A. Expires 09/30/2017

PARSONS BRINCKERHOFF
177 N. CHURCH AVE., STE. 610
TUCSON, AZ. 85701
(520) 882-6424

Arizona Blue Stake 1-800-STAKE-IT 1-800-782-5348

LEFT OVERBANK GRADING
SUNSET ROAD - SEGMENT I
SILVERBELL RD. TO I-10
PROJECT NO. 4RTSUN

SUNSET ROAD – SILVERBELL ROAD TO I-10 – PROJECT NO. 4RTSUN

Scale: N.T.S | Sheet CD03 of CD06 | Page 47 of 203

FILE NAME: T:\11542C Sunset\Drainage\4RTSUN_drn_003.dgn

Thu 12 Nov 2015, 16:50:10

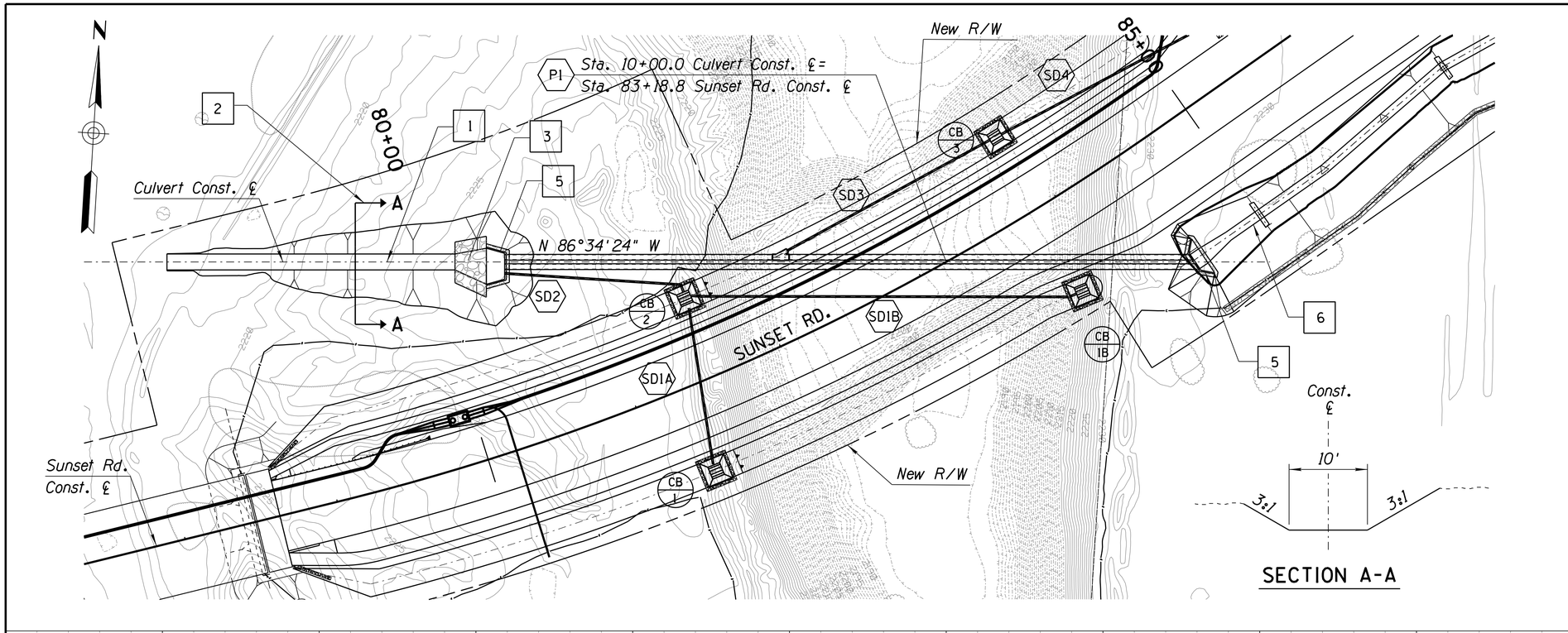

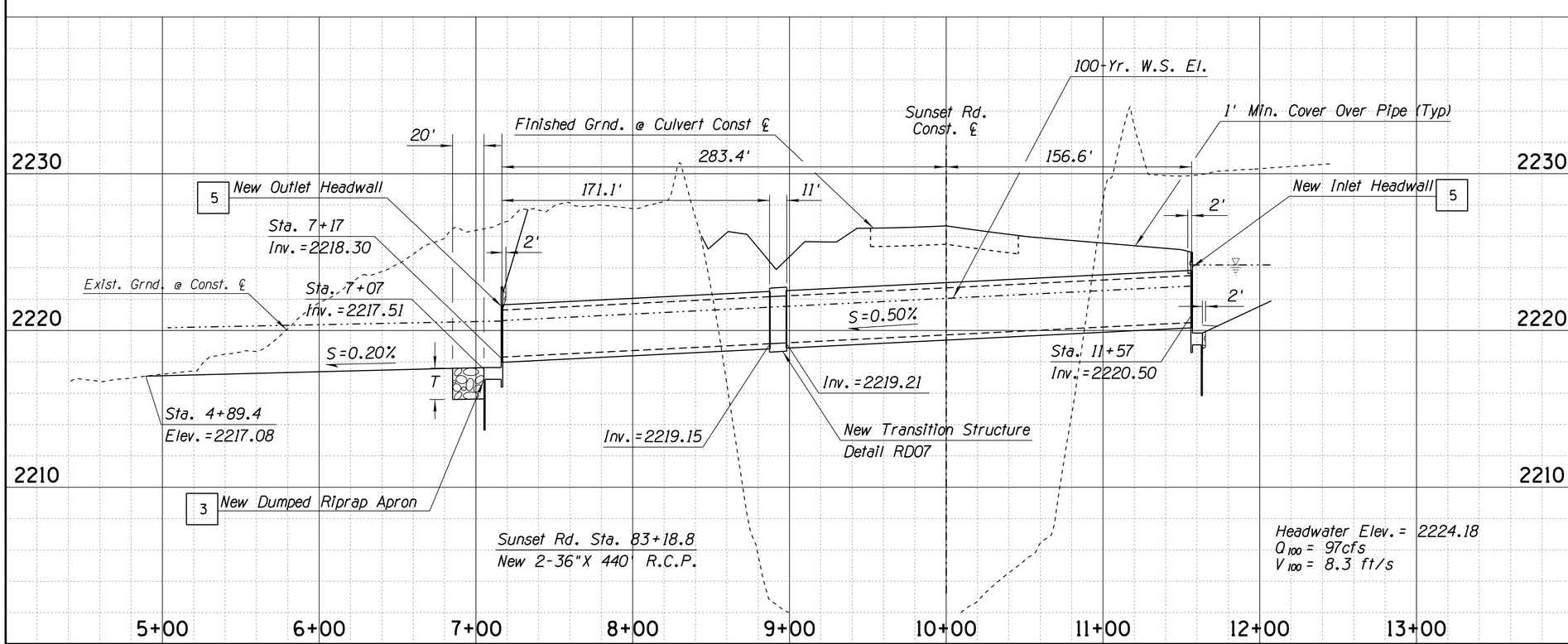

Notes:

1. Culvert and Channel Const. ℄ 1635 C.Y. Drainage Excavation To Be Paid Under Bid Item No. 2030401

2. Channel Typical Section See Section A-A

3. 50 C.Y. Riprap (Dumped) Apron, w/ Filter Fabric T=24", D_{50}=10" To Be Paid Under Bid Item No. 9130001
Riprap (Dumped) Color Shall Match Color Selected for Item 8030029, Rock Mulch, See Landscape Plans.

Gradation D_{50}=10":

% Passing	Size (in)
100-90	20"
85-70	15"
50-30	10"
15-5	7"
5-0	3"

4. Not Used

5. New Headwall, ADOT Std. Dwg. SD 6.30, Modified, See Detail RD08. Place 6" Riprap Around Headwall (2'X Perimeter), (5 C.Y. Inlet & 4 C.Y. Outlet, T=12", D_{50}=6"). Riprap (Dumped) Color Shall Match Color Selected for Item 8030029, Rock Mulch, See Landscape Plans.

Gradation D_{50}=6":

% Passing	Size (in)
100-90	12"
85-70	9"
50-30	6"
15-5	4"
5-0	2"

6. New Roadside Channel w/ Check Dams, See Sheets CD05 & CD06

P1 New Pipe Culvert I.D.

SD New Storm Drain Pipe I.D. See Storm Drain Plans

CB New Storm Drain Catch Basin I.D. See Storm Drain Plans

40' 0 40' 80'
SCALE: 1"=40'

Priscilla S. Cornelio, P.E., Director

No.	Revision Description	Engineer	Date

		Date
Designed	GB	11/15
Drawn	CPC	11/15
Checked	JJK	11/15
Proj. Engr.	GB	11/15

Registered Professional Engineer (Civil) CERTIFICATE NO. 37844 GREGORY ALLEN BAMBAUER Date Signed 09/30/17 ARIZONA, U.S.A. Expires 09/30/2017

PARSONS BRINCKERHOFF
177 N. CHURCH AVE., STE. 610
TUCSON, AZ. 85701
(520) 882-6424

Arizona Blue Stake 1-800-STAKE-IT 1-800-782-5348 Call Two Working Days Before You Dig

Pima County Department of Transportation

CULVERT PLAN & PROFILE
SUNSET ROAD - SEGMENT I
SILVERBELL RD. TO I-10
PROJECT NO. 4RTSUN

SUNSET ROAD – SILVERBELL ROAD TO I-10 – PROJECT NO. 4RTSUN

Scale: 1"=40' Horiz. | Sheet CD04 of CD06 | Page 48 of 203

FILE NAME: T:\11542C Sunset\Drainage\4RTSUN_drn_004.dgn

Thu 12 Nov 2015, 16:50:22

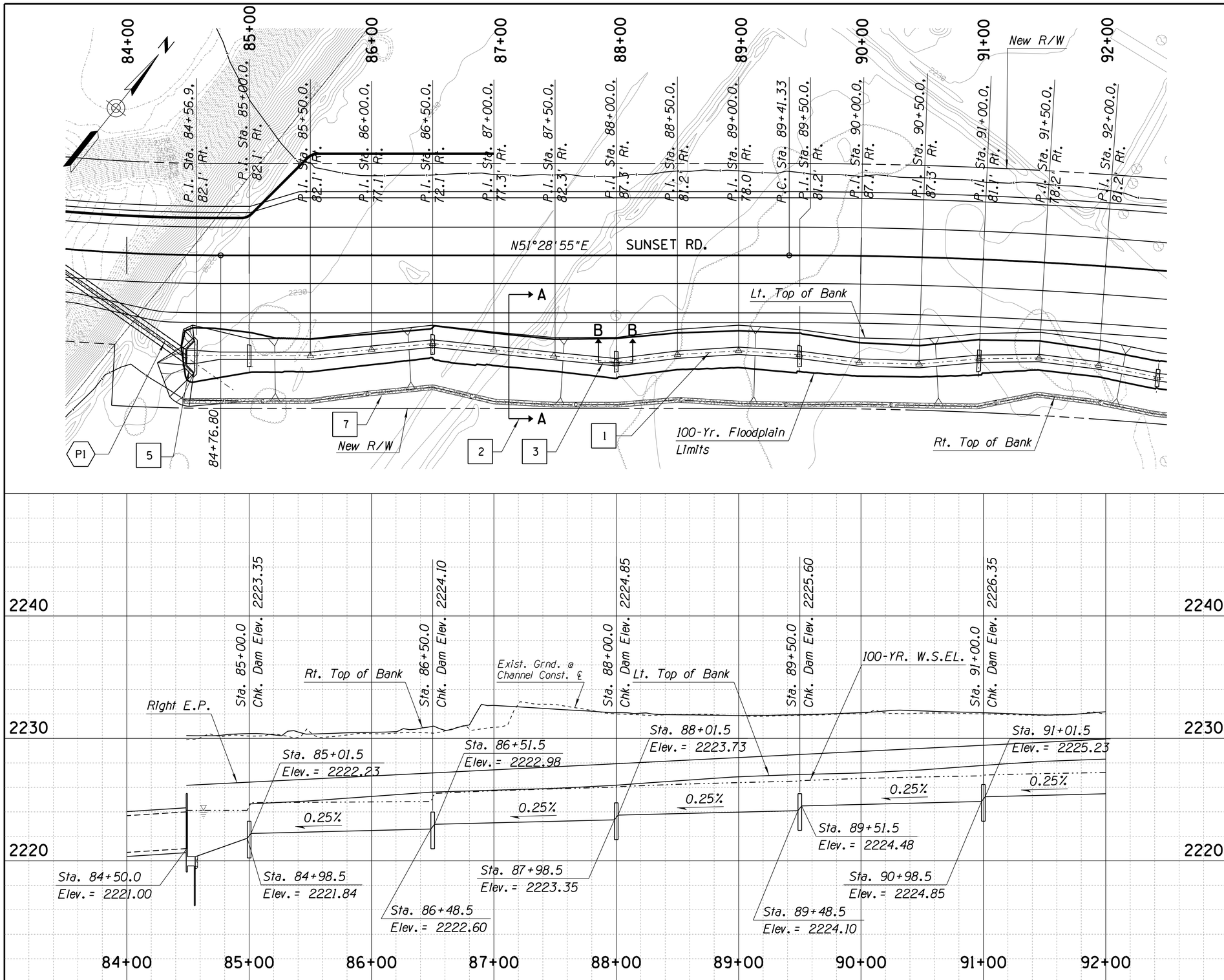

Notes:

1. Channel Const. ℄ Excavation Included w/ Roadway Excavation See Staking Plan, Detail RD10
2. Channel Typical Section See Section A-A, Detail RD10
3. Gabion Check Dam See Section B-B, Detail RD10
4. Not Used
5. New Headwall, See Sheet CD04
6. Not Used
7. Sta 84+50 to Sta 92+00 56 C.Y. Gravel Riprap (Dumped) With Filter Fabric. To Be Paid Under Bid Item No. 9130001 See Section A-A, Sheet RD10. Gravel Riprap Shall Match Color Selected for Item 8030029, Rock Mulch, See Landscape Plans.

P1 New Culvert I.D.

40' 0 40' 80'
SCALE: 1" = 40'

Pima County Department of Transportation

Priscilla S. Cornelio, P.E., Director

No.	Revision Description	Engineer	Date

		Date
Designed	GB	11/15
Drawn	CPC	11/15
Checked	JJK	11/15
Proj. Engr.	GB	11/15

Registered Professional Engineer (Civil) CERTIFICATE NO. 37844 GREGORY ALLEN BAMBAUER Date Signed 09/30/2017 ARIZONA U.S.A. Expires 09/30/2017

PARSONS BRINCKERHOFF
177 N. CHURCH AVE., STE. 610
TUCSON, AZ. 85701
(520) 882-6424

Arizona Blue Stake 1-800-STAKE-IT 1-800-782-5348 Call 2 working days before you dig

ROADSIDE CHANNEL
Sta 84+50 to Sta 92+00
SUNSET ROAD - SEGMENT 1
SILVERBELL RD. TO I-10

PROJECT NO. 4RTSUN

SUNSET ROAD – SILVERBELL ROAD TO I-10 – PROJECT NO. 4RTSUN

Scale: 1"=40' Horiz. | Sheet CD05 of CD06 | Page 49 of 203

FILE NAME: T:\11542C Sunset\Drainage\4RTSUN_drn_005.dgn

Thu 12 Nov 2015, 16:50:33

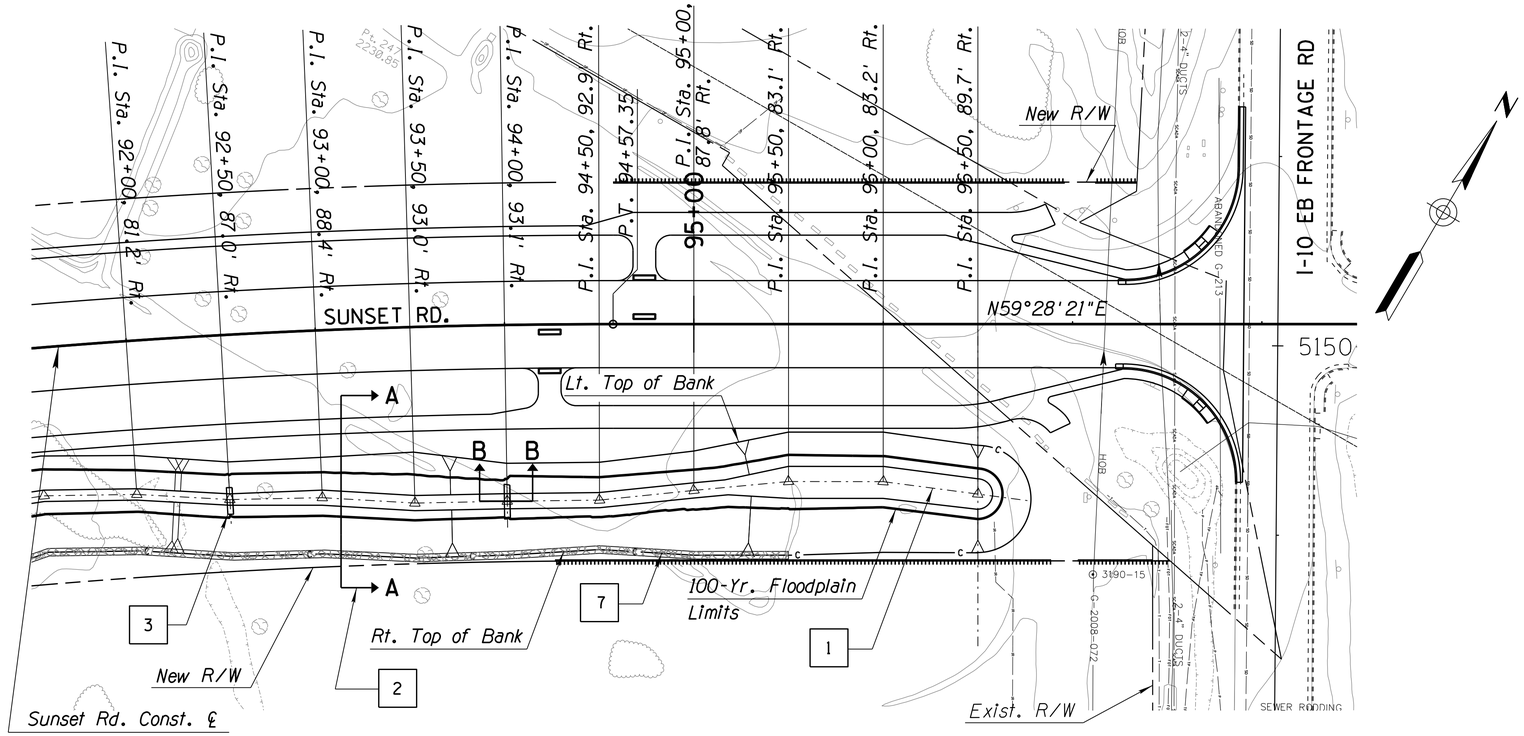

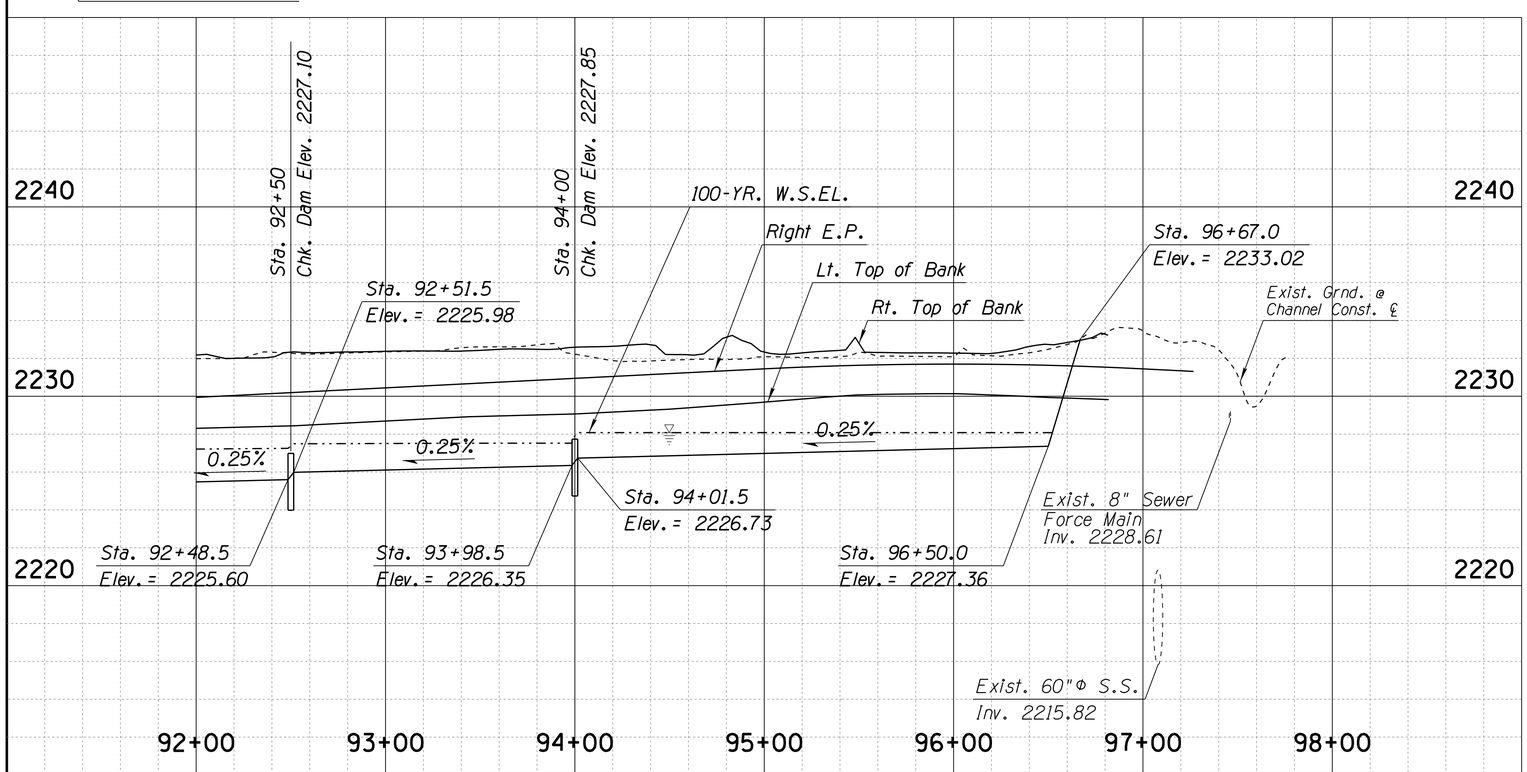

Notes:

1. Channel Const. ℄
   Excavation Included w/ Roadway Excavation
   See Staking Plan, Detail RD10
2. Channel Typical Section
   See Section A-A, Detail RD10
3. Gabion Check Dam
   See Section B-B, Detail RD10
4. Not Used
5. Not Used
6. Not Used
7. Sta 92+00 to Sta 95+50
   26 C.Y. Gravel Riprap (Dumped)
   With Filter Fabric.
   Bid Item No. 9130001
   See Section A-A,
   Sheet RD10. Gravel Riprap
   Shall Match Color Selected for
   Item 8030029, Rock Mulch,
   See Landscape Plans.

40' 0 40' 80'
SCALE: 1" = 40'

No.	Revision Description	Engineer	Date

		Date
Designed	GB	11/15
Drawn	CPC	11/15
Checked	JJK	11/15
Proj. Engr.	GB	11/15

Priscilla S. Cornelio, P.E., Director

Registered Professional Engineer (Civil) CERTIFICATE NO. 37844 GREGORY ALLEN BAMBAUER Date Signed 09/30/2017 ARIZONA U.S.A. Expires 09/30/2017

PARSONS BRINCKERHOFF
177 N. CHURCH AVE., STE. 610
TUCSON, AZ. 85701
(520) 882-6424

Arizona Blue Stake
1-800-STAKE-IT
1-800-782-5348
CC#: Arizona Crew Solution No. 76

Pima County Department of Transportation

ROADSIDE CHANNEL
Sta 92+00 to Sta 100+00
SUNSET ROAD - SEGMENT 1
SILVERBELL RD. TO I-10
PROJECT NO. 4RTSUN

SUNSET ROAD – SILVERBELL ROAD TO I-10 – PROJECT NO. 4RTSUN

Scale:	1"=40' Horiz.	Sheet CD06 of CD06	Page 50 of 203

FILE NAME: T:\11542C Sunset\Drainage\4RTSUN_drn_006.dgn

Tue 17 Nov 2015, 15:57:22

PAVEMENT MARKING GENERAL NOTES

1. All equipment/materials and construction shall meet or exceed the requirements contained in the current Pima Association of Governments (PAG) Standard Specifications and Standard Details, the Special Provisions and the approved plans. All pavement markings shall be installed in accordance with the PC/COT Pavement Marking Design Manual and applicable amendments.

2. The striping contractor shall contact the Pima County Pavement Marking Supervisor (520-724-2624) at least 3 working days in advance of any pavement marking layout being installed to schedule inspection and approval of pavement marking during normal business hours Monday thru Friday, State Holidays excluded.

3. Upon approval of the pavement marking layout, the Pima County Pavement Marking Supervisor will issue written authorization to the contractor to proceed with installing all pavement markings and associated reflective raised pavement markers.

4. The permanent pavement markings may be modified as directed and approved by the Traffic Engineer or their designee.

5. The design speed for Sunset Road is 40 miles per hour (mph). The posted speed limit is 35 mph. The design speed on Silverbell Road from Orange Grove Road to El Camino del Cerro is 50 mph. The posted speed limit is 45 mph. The Design Vehicle is WB-62.

6. All lane dimensions are from center of lane line, center of double lane line, or edge of pavement, unless otherwise noted.

7. The pavement marking drawings are schematic only. The contractor shall follow all dimensions, applicable marking details and specified Pima County standards when installing pavement striping, symbols, legends, and markers.

8. Painted layout striping shall be 15 mils (0.015") thick, water based paint placed on the final pavement surface with 8 pounds per gallon of AASHTO M 247-13 Type I glass beads with adhesion/moisture proof coating. Painted layout striping shall be installed within five working days of the final pavement surface being completed.

9. Painted symbols and legends shall be applied at the same time as the painted striping, with the exception of bike lane symbols and words (such as stop, ahead, only, etc.).

10. The final longitudinal striping shall be 90 mil (0.090") ribbon extruded thermoplastic reflectorized striping placed over the painted layout striping with a single drop of 10 pounds per 100 square foot of AASHTO M 247-13 Type I glass beads. The final longitudinal striping shall be placed within 21 to 30 calendar days of the final pavement surface being completed. All previously exempted longline markings shall be applied during the final longitudinal striping.

11. All final transverse striping, including symbols and legends, shall be 90 mil (0.090") alkyd hand cart extruded thermoplastic with 10 pounds per 100 square foot of AASHTO M 247-13 Type I glass beads.

12. The contractor shall be responsible for the layout and installation of pavement markings on the final surface course following one control line per direction of travel consisting of control points that have been set to no more than 50 feet apart on curve sections and 200 feet in tangent sections where the pavement marking pattern does not change.

13. It is the contractor's responsibility to ensure that the final surface course is placed so that the construction joint is no more than one foot offset from the final striping.

PAVEMENT MARKING GENERAL NOTES CONT.

14. All retroreflective raised pavement markers (RRPMs or RPMs) shall be installed so that the reflective face of each marker is facing the direction of traffic and is perpendicular to the direction of traffic flow. Type C or G pavement markers shall be installed so that the clear (or white) reflective face of each marker is facing approaching traffic and perpendicular to the direction of traffic flow to which it applies.

15. All RRPMs or RPMs shall be installed per the current edition of the PC/COT Pavement Marking Manual and applicable amendments.

16. All removal of existing pavement markings shall be accomplished in accordance with Section 701 of the PAG Standard Specifications. Painting over existing striping does not constitute approved striping obliteration. This work will be paid under Bid Item No. 7010261, Obliterate Pavement Marking.

17. Unless otherwise noted, all pavement markings shall be installed by the contractor.

18. Upon final inspection, a written acceptance or itemized punch list of missing or unacceptable pavement markings shall be submitted to the contractor and Pima County by the Traffic Engineer or designated representative.

19. The contractor shall be responsible for maintaining all striping until project is approved for "construction acceptance" by Pima County (fully open to traffic, all punch list items are completed, and the one-year minimum warranty begin). If the pavement marking material manufacturer offers a longer warranty the contractor shall transfer that warranty to Pima County.

20. The PC/COT Pavement Marking Manual is available online.

SIGNING GENERAL NOTES

1. All equipment/materials and construction shall meet or exceed the requirements contained in the current Pima Association of Governments (PAG) Standard Specifications and Standard Details, the Special Provisions and the approved plans.

2. All signs shall be in compliance with the latest edition of the Manual on Uniform Traffic Control Devices (MUTCD), the latest edition of the Pima County/City of Tucson Traffic Signing Design Manual, these plans and the Special Provisions.

3. Signs may be modified and locations adjusted to fit conditions at the discretion of the Traffic Engineer.

4. The design speed for Sunset Road is 40 miles per hour (mph). The posted speed limit is 35 mph. The design speed on Silverbell Road from Orange Grove Road to El Camino del Cerro is 50 mph. The posted speed limit is 45 mph. Sign placement shall be based on the posted speed limit.

5. Post lengths indicated on sign summary sheets are approximate. The contractor shall verify actual post lengths.

6. All perforated posts shall be installed in a concrete foundation, unless otherwise directed by the Traffic Engineer.

7. All sign station locations are approximate. The contractor shall verify actual sign locations with the Traffic Engineer prior to the installation of all signs.

8. The contractor shall be responsible for coordinating all work with Blue Stake, for installing all traffic signs in the field and for maintaining all signing until project is approved for "construction acceptance" by Pima County (fully open to traffic, all punch list items are completed, and one year warranties begin).

9. All overhead mounted signs shall be diamond grade sheeting, Type XI. All school signs shall be fluorescent yellow/green, diamond grade sheeting, Type XI. All other signs shall be high intensity prismatic sheeting, Type IV. All ground mounted signs shall have an anti graffiti coating applied to sign face, 3M #1160 film or equivalent.

SIGNING GENERAL NOTES CONT.

10. All new signs shall have 0.080 gauge, radius corner, aluminum backing unless otherwise noted.

11. Prior to disturbing any traffic signs, a sign condition inventory of all existing signing shall be conducted by the contractor and provided to the Sign Shop Supervisor (520-724-2611). Inventory shall indicate current sign location and condition, including any existing damage or deficiencies.

12. Any signs and posts being re-used on this project shall be stockpiled in a manner to avoid damage and maintain the integrity of the signs. Safe storage of stockpile and payment for damage to stockpile shall be the responsibility of the contractor.

13. All signs and posts not being re-used on the project shall be dismantled, stacked and delivered to the owner (City or County) by the contractor. The contractor is responsible for the safe storage at the construction site until delivery, and the safe unloading of the salvaged material. Notification of delivery shall be made at least two working days prior to delivery (48 hours). Pima County Sign Shop 1313 S. Mission Rd. (520-724-2611). No Friday deliveries.

APPROXIMATE PAVEMENT MARKING QUANTITIES

ITEM	ITEM NO.	UNIT	QUANTITIES
Pavement Marking (White Extruded Thermoplastic) (0.090")	7040005	L.F.	19,370
Pavement Marking (Yellow Extruded Thermoplastic) (0.090")	7040006	L.F.	16,190
Pavement Marking (White Extruded Thermoplastic) Sgl. Arrow (0.090")	7040032	EACH	21
Pavement Marking (White Extruded Thermoplastic) Dbl. Arrow (0.090")	7040042	EACH	5
Pavement Legend (White Extruded Thermoplastic) (ONLY) (0.090")	7040062	EACH	6
Pavement Marking (White Extruded Thermoplastic) (Transverse) (0.090")	7040130	L.F.	960
Pavement Marking (Yellow Extruded Thermoplastic) (Transverse) (0.090")	7040140	L.F.	1,530
Pavement Marker, Reflective, (Type C, Clear, Red)	7060020	EACH	15
Pavement Marker, Reflective, (Type D, Yellow, Two-Way)	7060025	EACH	241
Pavement Marker, Reflective, (Type G, Clear, One-Way)	7060030	EACH	20
Painted Pavement Marking	7080001	L.F.	38,050
Painted Pavement Symbol or Legend	7080010	EACH	26

The quantities for all pavement markings lengths are 4" equivalent.

APPROXIMATE SIGNING QUANTITIES

ITEM		ITEM NO.	UNIT	QUANTITIES
Specialty Signs	Specialty Sign	6080035	EACH	8
	Specialty Sign (Agency Furnished)	6080040	EACH	4
Sign Post & Appurtenances	Sign Post (Perforated) (Single)	6070010	L.F.	419
	Slip Base Assembly (Type 2 1/2T) (Telescoping)	6070042	EACH	20
	Sign Post (Perforated) (2½T)	6070057	L.F.	312
	Foundation for Sign Post (Perforated)	6070110	EACH	55
Sign Panel Sheeting Type	Sign Panel (Traffic Control) (Permanent) (Type IV)	6080016	S.F.	215
	Regulatory, Warning, Or Marker Sign Panel W/ ASTM Type XI Sheet	6080030	S.F.	257
	Flat Sheet Aluminum w/ Direct Apply Or Silk-Screen Characters	6080081	S.F.	12

Y SB 4 - D 40 / H 40

- Y — COLOR
- SB — PATTERN
- 4 — WIDTH OF STRIPE
- D — R.P.M. TYPE
- 40 — R.P.M. SPACING
- H — R.P.M. TYPE
- 40 — R.P.M. SPACING

LINE STYLE DESIGNATION

See 2008 Pima County and City of Tucson Pavement Marking Design Manual for further descriptions.

Sign Number	Sign Code	Work: New	Work: Existing: Replace Panel	Work: Existing: Overlay Panel	Work: Existing: Relocate Panel	Work: Existing: Remain	Sta. (ft.)	Offset (ft.)	Panel: Legend	Panel: Provider	Panel: Width (in.)	Panel: Height (in.)	Panel: Area (sq. ft.)	Panel: Type	Ground Mounted: Foundations	Ground Mounted: Posts: Type	Ground Mounted: Posts: Total length (ft.)	Ground Mounted: New Slip Bases	Ground Mounted: Retrofit Slip Bases	Ground Mounted: Stringer Type	Ground Mounted: Stringer Length (ft.)	Overhead: Structure Type	Overhead: Number of Lights	Remarks
SUNSET RD. - WESTBOUND																								
W-1	R10-15	X					68+56	37' Lt.	TURNING VEHICLES YIELD TO PEDS	CONTR	30	30	6.3	R										Mount on Signal Pole
W-2	SPR03-12	X					68+82	34' Lt.	LEFT ARROW ONLY AND RIGHT ARROW ONLY	CONTR	36	36	9	R	1	P1	12							
W-3	SPR03-12	X					70+97	39' Lt.	LEFT ARROW ONLY AND RIGHT ARROW ONLY	CONTR	36	36	9	R	1	P1	12							
W-4	R3-9b	X					72+20		TWO-WAY LEFT TURN ONLY	CONTR	24	36	6	R										Mount on Bridge. See Bridge Plans for Sign Mounting Assembly
	R3-9dp	X							END	CONTR	30	12	2.5	R										Mount below R3-9b
W-5	W3-3	X					73+39		SIGNAL AHEAD (SYMBOL)	CONTR	36	36	9	W										Mount on Bridge. See Bridge Plans for Sign Mounting Assembly
	D3-1	X							SILVERBELL RD	CONTR	54	12	4.5	F-DA										Mount below W3-3. See Sign Format Sht. PM09
W-6	R3-9b	X					93+50	27' Lt.	TWO-WAY LEFT TURN ONLY	CONTR	24	36	6	R	1	P1	12							
W-7	W11-15	X					94+92	27' Lt.	BICYCLE/PEDESTRIAN (SYMBOL)	CONTR	36	36	9	W	1	P1	15							
	W11-15P	X							TRAIL X-ING	CONTR	24	18	3	W										Mount below W11-15
	W16-7P(L)	X							DOWNWARD DIAGONAL ARROW (LEFT)	CONTR	24	12	2	W										Mount below W11-15P
W-8	R2-1	X					95+89	27' Lt.	SPEED LIMIT (35)	CONTR	24	30	5	R	1	P1	12							
W-9	W11-15	X					96+65	27' Lt.	BICYCLE/PEDESTRIAN (SYMBOL)	CONTR	36	36	9	W	1	P1	15							
	W11-15P	X							TRAIL X-ING	CONTR	24	18	3	W										Mount below W11-15
	W16-2aP	X							200 FT	CONTR	24	12	2	W										Mount below W11-15P
W-10	R3-8LS	X					98+75	37' Lt.	TWO LANE (LEFT/STRAIGHT)	CONTR	30	30	6.3	R	1	P1	12							
SUNSET RD. - EASTBOUND																								
E-1	R9-3	X					68+53	55' Rt.	NO PEDESTRIAN CROSSING (SYMBOL)	CONTR	18	18	2.3	R										Mount on Signal Pole
	R9-3	X							NO PEDESTRIAN CROSSING (SYMBOL)	CONTR	18	18	2.3	R										Mount on Signal Pole
	R9-3bP(L)	X							USE CROSSWALK W/ LEFT ARROW	CONTR	18	12	1.5	R										Mount below R9-3
	R10-15	X							TURNING VEHICLES YIELD TO PEDS	CONTR	30	30	6.3	R										Mount on Signal Pole
E-2	R2-1	X					70+08	29' Rt.	SPEED LIMIT (35)	CONTR	24	30	5	R	1	P1	12							
E-3	R3-9b	X					72+68		TWO-WAY LEFT TURN ONLY	CONTR	24	36	6	R										Mount on Bridge. See Bridge Plans for Sign Mounting Assembly
E-4	W11-15	X					92+13	32' Rt.	BICYCLE/PEDESTRIAN (SYMBOL)	CONTR	36	36	9	W	1	P1	14							
	W11-15P	X							TRAIL X-ING	CONTR	24	18	3	W										Mount below W11-15
	W16-2aP	X							200 FT	CONTR	24	12	2	W										Mount below W11-15P
E-5	R3-9b	X					93+36	32' Rt.	TWO-WAY LEFT TURN ONLY	CONTR	24	36	6	R	1	P1	13							
	R3-9dP	X							END	CONTR	30	12	2.5	R										Mount below R3-9b
E-6	W11-15	X					94+00	32' Rt.	BICYCLE/PEDESTRIAN (SYMBOL)	CONTR	36	36	9	W	1	P1	15							
	W11-15P	X							TRAIL X-ING	CONTR	24	18	3	W										Mount below W11-15
	W16-7P(L)	X							DOWNWARD DIAGONAL ARROW (LEFT)	CONTR	24	12	2	W										Mount below W11-15P
E-7	R6-1R	X					97+58	43' Rt.	ONE WAY ARROW RIGHT	CONTR	36	12	3	R	1	P1	10							
	R6-1L	X							ONE WAY ARROW LEFT	CONTR	36	12	3	R										Mount back to back w/ R6-1R

NOTE: ALL P1 POSTS SHALL BE SINGLE SQUARE TUBE POST, 2 INCH.

Notes:
1. The Engineer may shift a sign in order to achieve a more desirable location.
2. The Engineer shall verify post lengths and elevations.
3. Quantities are approximate and for the contractor's information only.

Panel Types:
RWM: Regulatory, Warning, or Marker
F-DA: Flat-sheet Aluminum with Direct Applied Characters
All stations are along the Sunset Rd. Const. ℄ unless noted otherwise.

Abbreviations:
CONTR Contractor
PCDOT Pima County Department of Transportation
2½T 2½" Telescoping

SIGN SUMMARY TABLE

Scale: N.T.S. | Sheet PM02 of PM09 | Page 52 of 203

Pima County Department of Transportation

Priscilla S. Cornelio, P.E., Director

Designed	RAM	11/15
Drawn	RM	11/15
Checked	CJR	11/15
Proj. Engr.	MPK	11/15

No.	Revision Description	Engineer	Date

Registered Professional Engineer (Civil) CERTIFICATE NO. 13452 CHARLES J. ROBINSON DATE EXPIRES 3-31-2017

TRANSPORTATION
AECOM
AECOM USA, Inc.
5151 W. Ina Road, Suite 400
Tucson, Arizona 85743
T 520.887.7800 F 520.887.8438
www.aecom.com

ARROW 811 Call at least two working days before you dig, it's the law and it's free. Arizona Blue Stake, Inc. 1-800-782-5348

SIGN SUMMARY
SUNSET ROAD - SEGMENT I
SILVERBELL RD. TO I-10
PROJECT NO. 4RTSUN

SUNSET ROAD – SILVERBELL ROAD TO I-10 – PROJECT NO. 4RTSUN

FILE NAME: P:\60311412 Sunset Rd\900-Work\910-CAD\20-SHEETS\4RTSUN_sn01.dgn DATE: 11/17/2015 TIME: 3:08:32 PM MurrietaR

Sign Number	Sign Code	Work: New	Work: Existing: Replace Panel	Work: Existing: Overlay Panel	Work: Existing: Relocate Panel	Work: Existing: Remain	Sta. (ft.)	Offset (ft.)	Panel: Legend	Panel: Provider	Panel: Width (in.)	Panel: Height (in.)	Panel: Area (sq. ft.)	Panel: Type	Ground Mounted: Foundations	Ground Mounted: Posts: Type	Ground Mounted: Posts: Total length (ft.)	Ground Mounted: New Slip Bases	Ground Mounted: Retrofit Slip Bases	Ground Mounted: Stringer Type	Ground Mounted: Stringer Length (ft.)	Overhead: Structure Type	Overhead: Number of Lights	Remarks
I-10 EASTBOUND FRONTAGE ROAD																								
S-1	W3-1	X					97+81	238' Lt.	STOP AHEAD (SYMBOL)	CONTR	48	48	16	*W	2	2½T	34	2						
	R5-1a	X							WRONG WAY	CONTR	48	36	12	*R										Mount back to back w/ W3-1
S-2	W3-1	X					98+48	239' Lt.	STOP AHEAD (SYMBOL)	CONTR	48	48	16	*W	2	2½T	34	2						
	R5-1a	X							WRONG WAY	CONTR	48	36	12	*R										Mount back to back w/ W3-1
S-3	R1-1	X					97+72	58' Lt.	STOP	CONTR	42	42	12	*R	2	2½T	27	2						
S-4	R1-1	X					98+46	54' Lt.	STOP	CONTR	42	42	12	*R	2	2½T	27	2						
S-8	R5-1	X					97+63	50' Lt.	DO NOT ENTER	CONTR	48	48	16	*R	2	2½T	34	2						
	R5-1a	X							WRONG WAY	CONTR	48	36	12	*R										Mount below R5-1
S-9	R5-1	X					98+49	44' Lt.	DO NOT ENTER	CONTR	48	48	16	*R	2	2½T	34	2						
	R5-1a	X							WRONG WAY	CONTR	48	36	16	*R										Mount below R5-1
I-10 WESTBOUND FRONTAGE RD.																								
N-1	R1-1	X					101+39	46' Rt.	STOP	CONTR	42	42	12	*R	2	2½T	27	2						
N-2	R1-1	X					101+92	46' Rt.	STOP	CONTR	42	42	12	*R	2	2½T	27	2						Mount behind barrier
N-3	W3-1	X					101+35	183' Rt.	STOP AHEAD (SYMBOL)	CONTR	48	48	16	*W	2	2½T	34	2						
	R5-1a	X							WRONG WAY	CONTR	48	36	12	*R										Mount back to back w/ W3-1
N-4	W3-1	X					102+04	183' Rt.	STOP AHEAD (SYMBOL)	CONTR	48	48	16	*W	2	2½T	34	2						Locate on the east side of WBFR. See Sheet PM05
	R5-1a	X							WRONG WAY	CONTR	48	36	12	*R										Mount back to back w/ W3-1
N-9	R5-1	X					101+39	41' Rt.	DO NOT ENTER	CONTR	48	48	16	*R										Mount on Light Pole
	R5-1a	X							WRONG WAY	CONTR	48	36	12	*R										Mount below R5-1
SILVERBELL RD. - SOUTHBOUND (STATIONING FROM SILVERBELL RD. CONST. ℄)																								
S-5	W3-3	X					249+00	24' Rt.	SIGNAL AHEAD (SYMBOL)	CONTR	36	36	9	W	2	P1	26							
	D3-1	X							SUNSET RD	CONTR	42	12	3.5	F-DA										Mount below W3-3. See Sign Format Sht. PM09
S-6	W1-7	X					254+20	26' Rt.	TWO-DIRECTION LARGE ARROW	CONTR	48	24	8	W	2	P1	20							
S-7	R9-3	X					254+70	26' Rt.	NO PEDESTRIAN CROSSING (SYMBOL)	CONTR	18	18	2.3	R										Mount on Signal Pole
	R9-3bP(R)	X							USE CROSSWALK W/ RIGHT ARROW	CONTR	24	12	2	R										Mount below R9-3
S-10	R3-4	X					254+13	25' Rt.	NO U-TURN	CONTR	36	36	9	*R										Mount to Signal Pole G Mast Arm between Type F Signal Faces. See Note 4
SILVERBELL RD. - NORTHBOUND (STATIONING FROM SILVERBELL RD. CONST. ℄)																								
N-5	R3-5fP	X					255+01	53' Lt.	RIGHT LANE	CONTR	24	8	1.3	R	1	P1	12							
	R3-5R	X							RIGHT TURN ONLY	CONTR	24	30	5	R										Mount below R3-5fP
N-6	R3-5fP	X					256+33	53' Lt.	RIGHT LANE	CONTR	24	8	1.3	R	1	P1	12							
	R3-5R	X							RIGHT TURN ONLY	CONTR	24	30	5	R										Mount below R3-5fP
N-7	R4-4	X					258+15	36' Lt.	BEGIN RIGHT TURN LANE YIELD TO BIKES	CONTR	36	30	7.5	R	1	P1	10							
N-8	W3-3	X					262+04	33' Lt.	SIGNAL AHEAD (SYMBOL)	CONTR	36	36	9	W	2	P1	26							
	D3-1	X							SUNSET RD	CONTR	42	12	3.5	F-DA										Mount below W3-3. See Sign Format Sht. PM09
N-10	W2-2				X		246+08	33' Lt.	INTERSECTION WARNING						1	P1	13							
	SPECIALTY				X				SUNSET RD															Mount below W2-2
N-11	R5-104				X		248+02	33' Lt.	LITTERING HIGHWAY UNLAWFUL						1	P1	12							

NOTE: ALL P1 POSTS SHALL BE SINGLE SQUARE TUBE POST, 2 INCH.

Notes:
1. The Engineer may shift a sign in order to achieve a more desirable location.
2. The Engineer shall verify post lengths and elevations.
3. Quantities are approximate and for the contractor's information only.
4. The contractor shall use Pelco mounting hardward to mount sign.

Panel Types:
RWM: Regulatory, Warning, or Marker
F-DA: Flat-sheet Aluminum with Direct Applied Characters
*ASTM Type XI Sheeting
All stations are along the Sunset Rd. Const. ℄ unless noted otherwise.

Abbreviations:
CONTR Contractor
PCDOT Pima County Department of Transportation
2½T 2½" Telescoping

SIGN SUMMARY TABLE

Scale: N.T.S. | Sheet PM03 of PM09 | Page 53 of 203

Pima County Department of Transportation

Priscilla S. Cornelio, P.E., Director

Designed	RAM	11/15
Drawn	RM	11/15
Checked	CJR	11/15
Proj. Engr.	MPK	11/15

No.	Revision Description	Engineer	Date

Registered Professional Engineer (Civil) CERTIFICATE NO. 34362 CHARLES J. ROBINSON Date 9/17/15 EXPIRES 3-31-2017

AECOM
TRANSPORTATION
AECOM USA, Inc. 5151 E. Broadway, SUITE 400 Tucson, Arizona 85705 T 520.887.1800 F 520.887.8438
www.aecom.com

ARIZONA 811 BLUE STAKE, INC. CALL 8 WORK DAYS FOR MARKING SERVICE 602.263.1100 OR 1.800.782.5348 WWW.BLUESTAKE.ORG

SIGN SUMMARY
SUNSET ROAD - SEGMENT I
SILVERBELL RD. TO I-10
PROJECT NO. 4RTSUN

SUNSET ROAD – SILVERBELL ROAD TO I-10 – PROJECT NO. 4RTSUN

FILE NAME: P:\60311412 Sunset Rd\900-Work\910-CAD\20-SHEETS\4RTSUN_sn02.dgn DATE: 11/16/2015 TIME: 9:46:12 AM MurrietaR

Sign Number	Sign Code	Work: New	Work: Existing: Replace Panel	Work: Existing: Overlay Panel	Work: Existing: Relocate Panel	Work: Existing: Remain	Sta. (ft.)	*Offset (ft.)	Panel: Legend	Panel: Provider	Panel: Width (in.)	Panel: Height (in.)	Panel: Area (sq. ft.)	Panel: Type	Ground Mounted: Foundations	Ground Mounted: Posts: Type	Ground Mounted: Posts: Total length (ft.)	Ground Mounted: New Slip Bases	Ground Mounted: Retrofit Slip Bases	Ground Mounted: Stringer Type	Ground Mounted: Stringer Length (ft.)	Overhead: Structure Type	Overhead: Number of Lights	Remarks
SUNSET RD. - PATH SIGNING																								
P-1	R5-3	X					94+10	25' Rt.	NO MOTOR VEHICLES	CONTR	24	24	4	R	1	P1	11							
P-2	Specialty	X					94+20	57' Rt.	SUNSET RD SPLIT ARROWS	CONTR	18	24	3	-	1	P1	11							See Sign Format Sht. PM09
P-3	R1-2	X					94+34	26' Rt.	YIELD (22"x22"x22")	CONTR	22	22	1.7	R	1	P1	12							
	Specialty	X							THE LOOP	PCDOT	30	9	1.9	-										See Sign Format Sht. PM09. Mount on top of Yield Sign post
	Specialty	X							SUNSET RD	PCDOT	30	9	1.9	-										See Sign Format Sht. PM09. Mount back to back w/ Loop Sign
P-4	Specialty	X					94+52	41' Rt.	SUNSET RD STRAIGHT/RIGHT ARROW	CONTR	18	24	3	-	1	P1	11							See Sign Format Sht. PM09
P-5	R1-2	X					94+62	26' Lt.	YIELD (22"x22"x22")	CONTR	22	22	1.7	R	1	P1	12							
	Specialty	X							THE LOOP	PCDOT	30	9	1.9	-										See Sign Format Sht. PM09. Mount on top of Yield Sign post
	Specialty	X							SUNSET RD	PCDOT	30	9	1.9	-										See Sign Format Sht. PM09. Mount back to back w/ Loop Sign
P-6	R5-3	X					94+87	26' Lt.	NO MOTOR VEHICLES	CONTR	24	24	4	R	1	P1	11							
P-7	Specialty	X					94+76	61' Lt.	SUNSET RD RIGHT ARROW	CONTR	18	24	3	-	1	P1	11							See Sign Format Sht. PM09
P-8	Specialty	X					95+10	61' Lt.	SUNSET RD LEFT/STRAIGHT ARROW	CONTR	18	24	3	-	1	P1	11							See Sign Format Sht. PM09
P-9	Specialty	X					96+94	95' Lt.	SUNSET RD RIGHT ARROW	CONTR	18	24	3	-	1	P1	11							See Sign Format Sht. PM09
P-10	Specialty	X					93+83	57' Rt.	SUNSET RD LEFT/STRAIGHT ARROW	CONTR	18	24	3	-	1	P1	11							See Sign Format Sht. PM09
P-11	Specialty	X					96+34	57' Rt	SUNSET RD RIGHT ARROW	CONTR	18	24	3	-	1	P1	11							See Sign Format Sht. PM09
P-12	Specialty	X					97+04	62' Rt.	SUNSET RD LEFT ARROW	CONTR	18	24	3	-	1	P1	11							See Sign Format Sht. PM09

NOTE: ALL P1 POSTS SHALL BE SINGLE SQUARE TUBE POST, 2 INCH.

Notes:
1. The Engineer may shift a sign in order to achieve a more desirable location.
2. The Engineer shall verify post lengths and elevations.
3. Quantities are approximate and for the contractor's information only.

Panel Types:
RWM: Regulatory, Warning, or Marker
F-DA: Flat-sheet Aluminum with Direct Applied Characters
All stations are along the Sunset Rd. Const. ℄ unless noted otherwise.
*Signs shall be placed a minimum of 2' off the edge of path to sign edge.

Abbreviations:
CONTR Contractor
PCDOT Pima County Department of Transportation
2½T 2½" Telescoping

SIGN SUMMARY TABLE

Scale: N.T.S. | Sheet PM04 of PM09 | Page 54 of 203

Priscilla S. Cornelio, P.E., Director

Pima County Department of Transportation

No.	Revision Description	Engineer	Date

		Date
Designed	RAM	11/15
Drawn	RM	11/15
Checked	CJR	11/15
Proj. Engr.	MPK	11/15

Registered Professional Engineer (Civil) CERTIFICATE NO. 33402 CHARLES J. ROBINSON STATE OF ARIZONA DATE SIGNED 11/16/15 EXPIRES 3-31-2017

AECOM TRANSPORTATION
AECOM USA, Inc.
5151 E. Broadway Blvd, SUITE 400
Tucson, Arizona 85705
T 520.887.7800 F 520.887.8438
www.aecom.com

ARIZONA 811 Call at least two full working days before you begin excavation. Arizona Blue Stake, Inc. 1-800-782-5348 Non-Member Utilities and Railroads must be located separately.

SIGN SUMMARY
SUNSET ROAD - SEGMENT I
SILVERBELL RD. TO I-10
PROJECT NO. 4RTSUN

SUNSET ROAD – SILVERBELL ROAD TO I-10 – PROJECT NO. 4RTSUN

FILE NAME: P:\60311412 Sunset Rd\900-Work\910-CAD\20-SHEETS\4RTSUN_sn03.dgn DATE: 11/16/2015 TIME: 5:07:24 PM RobinsonC

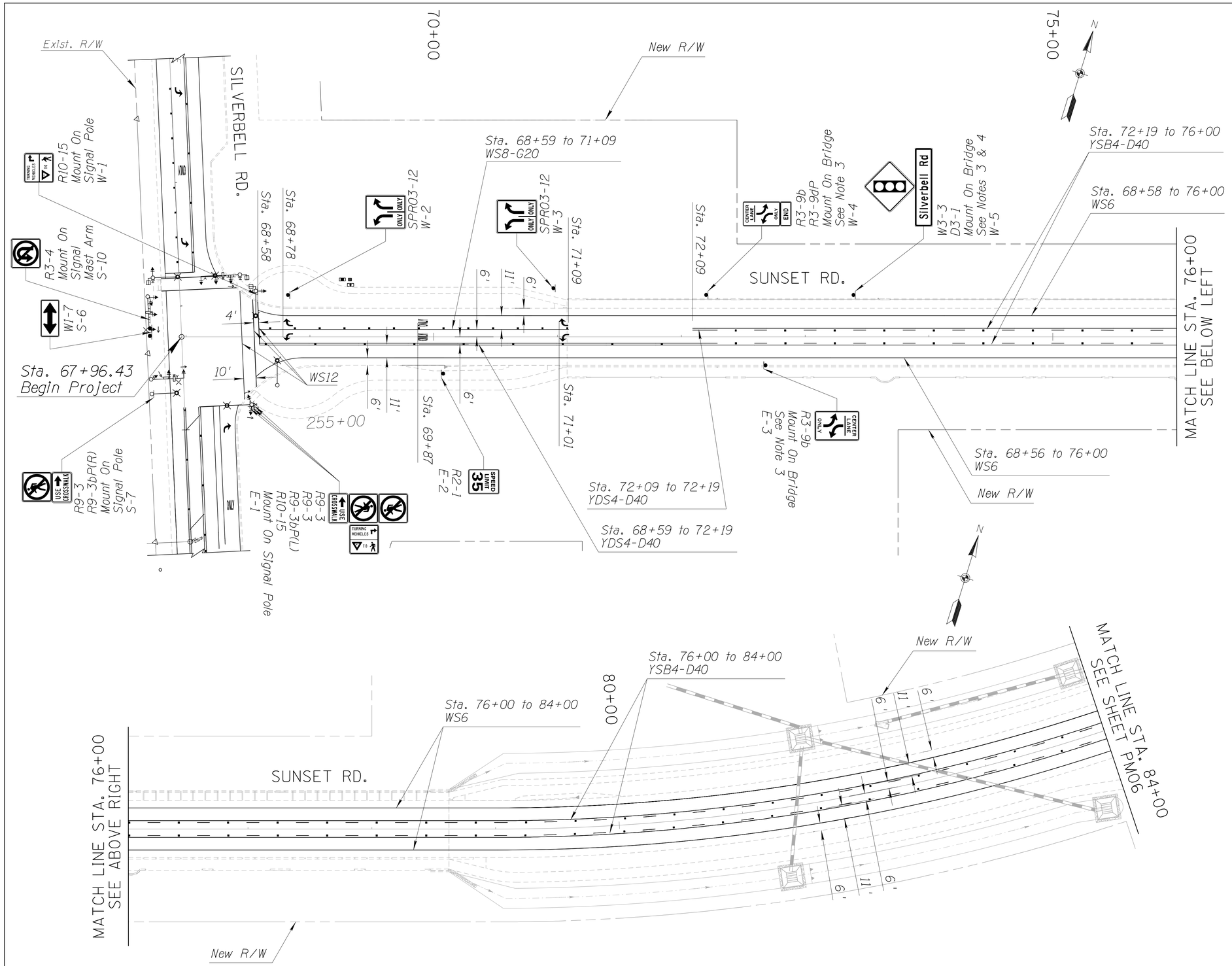

NOTES:

1. All stations are referenced from the Sunset Rd. Const. ℄ unless otherwise noted.
2. See Sheet PM07 for the pavement marking and signing on Silverbell Rd.
3. See Bridge Plans for bridge sign mount assembly.
4. See Sign Format Sheet PM09 for sign layout.

40' 0 40' 80'
SCALE: 1"=40'

Pima County Department of Transportation

Priscilla S. Cornelio, P.E., Director

Designed	MPK
Drawn	RM
Checked	CJR
Proj. Engr.	MPK

No.	Revision Description	Engineer	Date

Date
11/15
11/15
11/15
11/15

Registered Professional Engineer (Civil) CERTIFICATE NO. 13452 CHARLES JAMES ROBINSON STATE OF ARIZONA DATE SIGNED 11/13/15 EXPIRES 3-31-2017

AECOM

TRANSPORTATION

AECOM USA, Inc.
333 E. Wetmore Rd., SUITE 400
Tucson, Arizona 85705
T 520.887.7800 F 520.887.8438
www.aecom.com

CALL 48 HOURS BEFORE YOU BEGIN WORK
ARIZONA 811
BLUE STAKE, INC. 1-800-782-5348
Web Ticket Look-Up: www.azbluestake.com

PAVEMENT MARKING/SIGNING SHEET
SUNSET ROAD - SEGMENT 1
SILVERBELL RD. TO I-10
STA. 68+00 TO STA. 83+00
PROJECT NO. 4RTSUN

SUNSET ROAD - SILVERBELL ROAD TO I-10 - PROJECT NO. 4RTSUN

Scale:	1"=40' Horiz.	Sheet PM05 of PM09	Page 55 of 203

FILE NAME: P:\60311412 Sunset Rd\900-Work\910-CAD\20-SHEETS\4RTSUN_pm01_seg1.dgn DATE: 11/13/2015 TIME: 10:41:14 AM MurrietaR

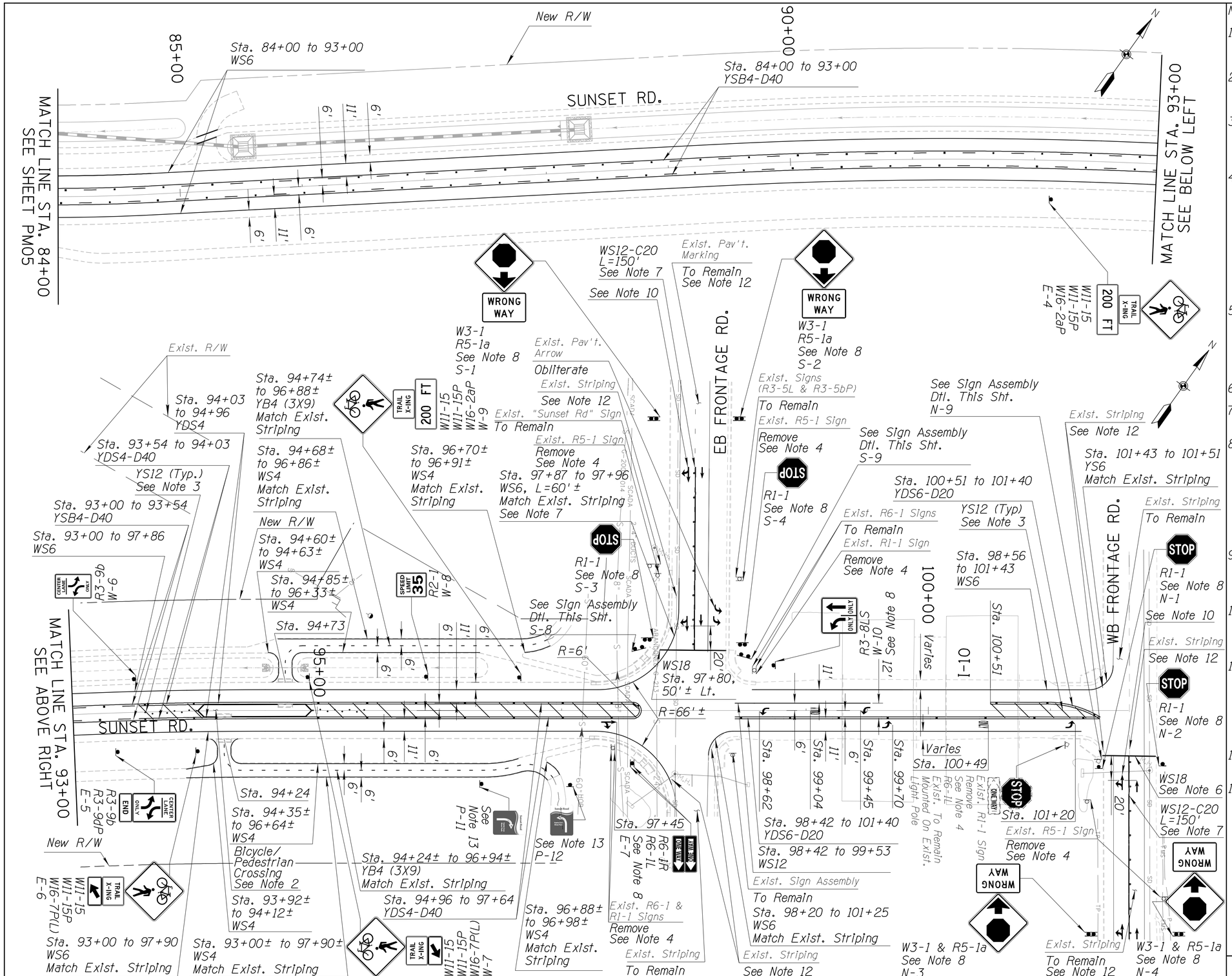

NOTES:

1. All stations are referenced from the Sunset Rd. Const. ℄ unless otherwise noted.
2. See Dtl. RD05 for bicycle crossing details and additional wayfinding signing for path.
3. Striping shall be at 20' spacing and 45° angle in accordance with Sheet No. 4-5 of the PC/COT Pavement Marking Design Manual.
4. Existing signs to be removed within the ADOT right-of-way shall become the property of the contractor. The contractor shall contact Xavier Casillas (520-838-2828) three days prior to any sign removal and installation. Sign removals shall be in accordance with Section 202 of the Std. Specifications and paid under Bid Item No. 2020001, Removal of Structures & Obstructions.
5. Existing R5-1a (4 EA.) signs, posts and foundations along the eastbound and westbound frontage roads between the I-10 exit ramps and Sunset Rd. shall be removed and disposed of as mentioned in Note 4 above.
6. Place stop bar at curb return.
7. Install new striping over existing striping.
8. The contractor shall place sign identification information on the back of all new signs installed within the ADOT right-of-way as shown in the ADOT Std. Dwg. S-13, Sign Identification Details. The contractor shall contact Xavier Casillas (520-838-2828) three days prior to any new sign installation.
9. This sign mount assembly shall be installed in accordance with Section 314 of the ADOT Traffic Engineering Guidelines and Processes.
10. Install pavement marking arrows on the eastbound and westbound frontage roads in accordance with ADOT Std. Dwg. M-11.
11. Install wrong way arrows on the eastbound (2) and westbound (2) frontage roads in accordance with ADOT Std. Dwg. M-12. The contractor shall coordinate with Xavier Casillas on the location of these arrows.
12. Obliterate existing striping as needed to match proposed striping.
13. See Sign Format Sheet PM09 for sign layout.

R5-1
R5-1a
See Notes 8 & 9
S-8
S-9
N-9 (Mount on Light Pole)

SIGN ASSEMBLY DTL.

N.T.S.

40' 0 40' 80'

SCALE: 1"=40'

No.	Revision Description	Engineer	Date

		Date
Designed	MPK	11/15
Drawn	RM	11/15
Checked	CJR	11/15
Proj. Engr.	MPK	11/15

Priscilla S. Cornelio, P.E., Director

Pima County Department of Transportation

AECOM TRANSPORTATION
AECOM USA, Inc.
4444 E. Broadway Blvd., SUITE 400
Tucson, Arizona 85711
T 520.887.1800 F 520.887.8438
www.aecom.com

PAVEMENT MARKING/SIGNING SHEET
SUNSET ROAD - SEGMENT 1
SILVERBELL RD. TO I-10
STA. 84+00 TO STA. 102+00
PROJECT NO. 4RTSUN

SUNSET ROAD – SILVERBELL ROAD TO I-10 – PROJECT NO. 4RTSUN

Scale: 1"=40' Horiz. | Sheet PM06 of PM09 | Page 56 of 203

FILE NAME: P:\60311412 Sunset Rd\900-Work\910-CAD\20-SHEETS\4RTSUN_pm02_segl.dgn DATE: 11/17/2015 TIME: 3:28:59 PM RobinsonC

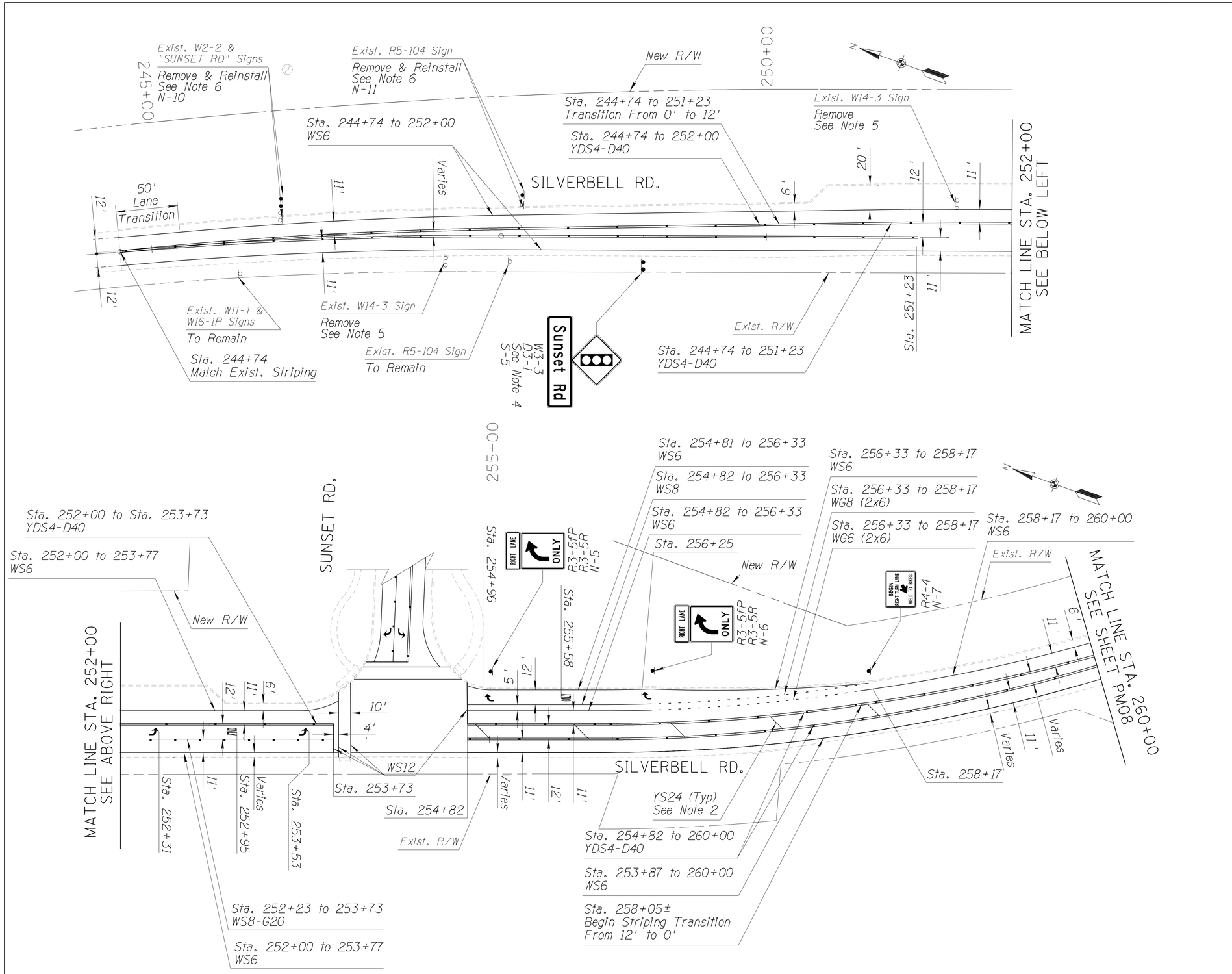

NOTES:

1. All stations are referenced from the Existing Silverbell Rd. Const. ℄ unless otherwise noted.
2. Striping shall be at 80' spacing and 45° angle in accordance with Sheet No. 4-4 of the PC/COT Pavement Marking Design Manual.
3. See Sheet PM05 for the pavement marking and signing on Sunset Rd.
4. See Sign Format Sheet PM09 for sign layout.
5. Existing signs or delineators in conflict with the improvements shall be removed. Sign and delineator removals shall be in accordance with Section 202 of the Std. Specifications and paid under Bid Item No. 2020001, Removals of Structures & Obstructions.
6. Existing sign panel(s) shall be removed and reinstalled at the designated location. This work shall be paid under Bid Item No. 6070220, Remove and Relocate Signs.

Priscilla S. Cornelio, P.E., Director

	Designed	MPK	11/15
	Drawn	RM	11/15
	Checked	CJR	11/15
	Proj. Engr.	MPK	11/15

No.	Revision Description	Engineer	Date

Registered Professional Engineer (Civil) CERTIFICATE NO. 34462 CHARLES JAMES ROBINSON Date Signed 5/27/17 EXPIRES 3-31-2017

AECOM

TRANSPORTATION

AECOM USA, Inc.
4801 E. Broadway Blvd., SUITE 400
Tucson, Arizona 85711
T 520.887.7800 F 520.887.8438

www.aecom.com

Call at least two full working days before you dig. ARIZONA 811 Blue Stake, Inc. 1-800-782-5348 www.azbluestake.com

Pima County Department of Transportation

PAVEMENT MARKING/SIGNING SHEET
SUNSET ROAD - SEGMENT I
SILVERBELL RD. TO I-10
STA. 45+00 TO STA. 260+00
PROJECT NO. 4RTSUN

SUNSET ROAD - SILVERBELL ROAD TO I-10 - PROJECT NO. 4RTSUN

Scale:	1"=40' Horiz.	Sheet PM07 of PM09	Page 57 of 203

FILE NAME: P:\60311412 Sunset Rd\900-Work\910-CAD\20-SHEETS\4RTSUN_pm03_seg1.dgn DATE: 11/13/2015 TIME: 10:42:58 AM MurrietaR

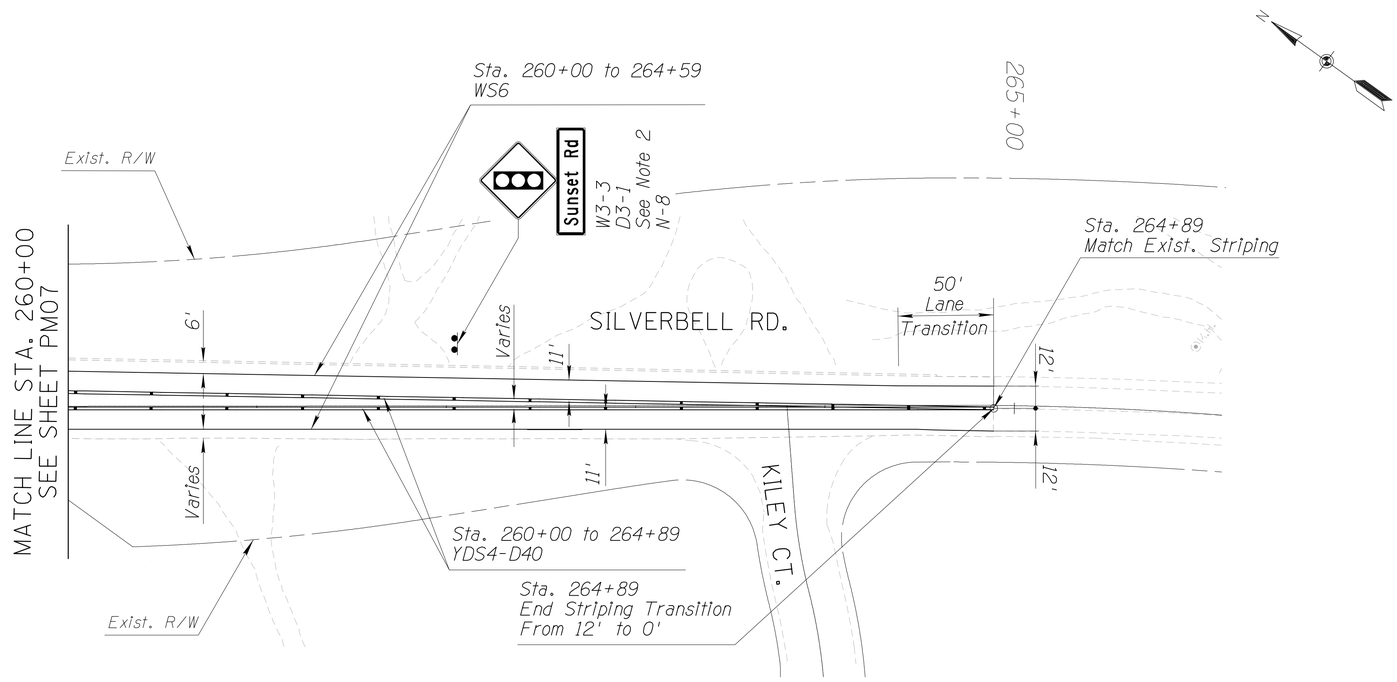

NOTES:

1. All stations are referenced from the Existing Silverbell Rd. Const. ℄ unless otherwise noted.
2. See Sign Format Sheet PM09 for sign layout.
3. Existing signs or delineators in conflict with the improvements shall be removed. Sign and delineator removals shall be in accordance with Section 202 of the Std. Specifications and paid under Bid Item No. 2020001, Removals of Structures & Obstructions.

40' 0 40' 80'
SCALE: 1"=40'

Pima County Department of Transportation

Priscilla S. Cornelio, P.E., Director

No.	Revision Description	Engineer	Date

		Date
Designed	MPK	11/15
Drawn	RM	11/15
Checked	CJR	11/15
Proj. Engr.	MPK	11/15

Registered Professional Engineer (Civil) CERTIFICATE NO. 33462 CHARLES J. ROBINSON DATE SIGNED 9/17/2015 EXPIRES 3-31-2017

AECOM

TRANSPORTATION

AECOM USA, Inc.
2905 E. Skyline Dr., SUITE 400
Tucson, Arizona 85705
T 520.887.1800 F 520.887.8438

www.aecom.com

CUT at least two full working days before you DIG
ARIZONA 811
Call Arizona Blue Stake, Inc.
Dial 811 or 1-(800)-782-5348
Visit Blue Stake's website at www.azbluestake.com

SUNSET ROAD - SILVERBELL ROAD TO I-10 - PROJECT NO. 4RTSUN

PAVEMENT MARKING/SIGNING SHEET
SUNSET ROAD - SEGMENT 1
SILVERBELL RD. TO I-10
STA. 260+00 TO STA. 264+59
PROJECT NO. 4RTSUN

Scale:	1"=40' Horiz.	Sheet PM08 of PM09	Page 58 of 203

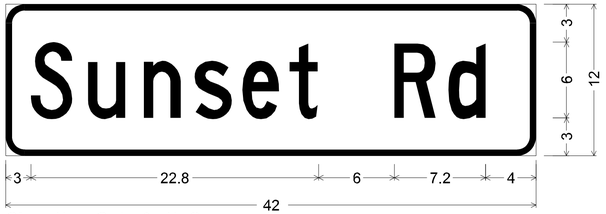

Sign No. S-5 & N-8
1.5" Radius, 0.5" Border, Black on Yellow
(Sunset Rd) C

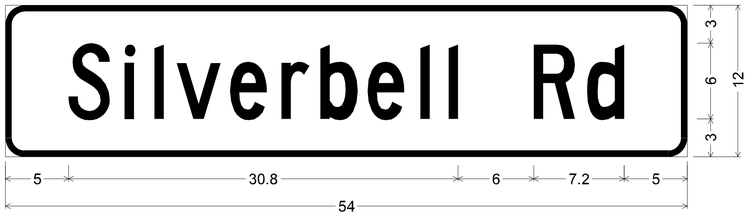

Sign No. W-5
1.5" Radius, 0.5" Border, Black on Yellow
(Silverbell Rd) C

Sign No. P-2
See Notes 3 & 4

Sign No. P-4
See Notes 3 & 4

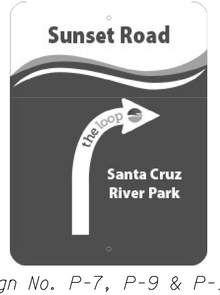

Sign No. P-7, P-9 & P-11
See Notes 3 & 4

Sign No. P-8
See Notes 3 & 4

Sign No. P-12
See Notes 3 & 4

Sign No. P-10
See Notes 3 & 4

Sign No. P-3 & P-5
See Notes 3 & 5

Sign No. P-3 & P-5
See Notes 3 & 5

NOTES:

1. All signs shown shall have high intensity prismatic sheeting, Type IV, unless otherwise noted.
2. All sign dimensions are in inches.
3. See the Sign Summary Tables for additional information.
4. These sign panels will be fabricated by ZUMAR and installed by the contractor. The contractor's coordination with ZUMAR, and sign panel installation will be paid under Bid Item No. 6080035, Specialty Sign. See the Special Provisions for ZUMAR contact information. The sign posts and foundations are paid under its respective bid item.
5. These sign panels will be furnished by PCDOT and installed by the contractor. Sign panel installation will be paid under Bid Item No. 6080040, Specialty Sign (Agency Furnished). The sign posts and foundations are paid under its respective bid item.

40' 0 40' 80'
SCALE: 1"=40'

Priscilla S. Cornelio, P.E., Director

Designed	MPK	
Drawn	RM	11/15
Checked	CJR	11/15
Proj. Engr.	MPK	11/15

No.	Revision Description	Engineer	Date

Registered Professional Engineer (Civil) CERTIFICATE NO. 33452 CHARLES J. ROBINSON DATE SIGNED 11/13/15 EXPIRES 3-31-2017

AECOM
TRANSPORTATION
AECOM USA, Inc.
5151 W. Ironwood Hills Dr., SUITE 400
Tucson, Arizona 85743
T 520.887.1800 F 520.887.8438
www.aecom.com

Pima County Department of Transportation

SIGN FORMAT SHEET
SUNSET ROAD - SEGMENT 1
SILVERBELL RD. TO I-10

PROJECT NO. 4RTSUN

SUNSET ROAD - SILVERBELL ROAD TO I-10 - PROJECT NO. 4RTSUN

Scale: 1"=40' Horiz. | Sheet PM09 of PM09 | Page 59 of 203

TRAFFIC SIGNAL GENERAL NOTES:

1. All equipment / materials and construction shall meet or exceed the requirements contained in the current City of Tucson /Pima County (COT/PC) Standard Specifications and the Standard Details for Public Improvements, the Special Provisions and the Approved Plans.

2. All pedestrian push button assemblies shall meet current ADA requirements. The signs that shall be used are identified in the latest edition of the MUTCD as adopted by PCDOT Traffic Engineering Division. The specific sign face shall be verified with the Traffic Engineer.

3. Metro street name signs shall be installed such that the bottom of the sign is no less than 17 feet above the roadway pavement or no less than 16 feet above the finished grade beyond the shoulder, bike lane or multi-use lane.

4. The exact location of each new pole foundation, pull box, controller, cabinet foundation, UPS cabinet foundation and electric service pedestal foundation shall be approved by the Traffic Engineer prior to installation.

5. The top of the pole foundation shall be level with the surrounding finished grade. If the slope or shoulder drops off from finished grade, the Contractor shall grade around pole foundation. The top of the foundation shall extend no more than 4 inches above surrounding finished grade.

6. Only new conduit, conductors and cable shall be installed.

7. All conduits shall be cleaned by compressed air and a properly sized conduit piston or mandrel shall be pulled through the conduit prior to conductor and cable installation.

8. Conduit installed under existing paved driveways, which are not scheduled to be reconstructed as part of this project, shall be installed by means of boring.

9. Pull boxes shall not be installed within concrete curb access ramps or landings. In addition, any pull boxes installed behind curbs shall be installed between the curb and the proposed / future sidewalk or beyond the proposed / future sidewalk. An exception to this note would be pull boxes installed in a median. Any pull boxes installed along an uncurbed roadway shall be installed 10 feet from edge of pavement to edge of pull box where right-of-way permits or as far from pavement as practical when there is insufficient right-of-way to provide the 10 foot offset.

10. A three quarter (3/4) in. x 10 ft. ground rod shall be installed in the No. 7 pull box (with the extension) adjacent to the controller cabinet. Two ground rod clamps shall be furnished and installed for clamping the ground wire.

11. The high voltage cables should be separated from the low voltage cables as much as possible. Separate conduit should be used for high voltage and low voltage cables between the controller cabinet and the No. 7 pull boxes located on each corner of the intersection.

12. A #14 AWG IMSA 19-1-1984 7-conductor solid wire cable shall be installed from each traffic signal terminal strip to the concrete pull box adjacent to the pole foundation leaving three feet of slack for each cable (measured from the top of the pull box) in the pull box.

13. Two #10 AWG-XHHW conductors shall be installed from each luminaire to the concrete pull box adjacent to the pole foundation, leaving three feet of slack for each conductor (measured from the top of the pull box) in the pull box. Route four #10 AWG conductors to the luminaire with the photoelectric cell. An in-line fuse shall be installed for each luminaire in the associated pull box.

14. Poles with pedestrian signals and push button stations shall use one #14 AWG 7-conductor IMSA cable for both the push button station and the pedestrian signal. The outer cable jacket shall be removed at the hand hole height. Two conductors shall be routed to the push button station and the remaining conductors shall be routed to the pedestrian signal.

15. All vehicle roadway detection loop cables shall be #14 AWG IMSA 51-5-1985 cable. Lead-in cables shall be #16 AWG IMSA 50-2-1984 cable. No splices shall be allowed in the roadway detection loop cable except at the pull box adjacent to loop.

16. The detector lead-in cable shall not be spliced.

17. Detection loop saw cuts shall be flushed with water under pressure and then dried with air under pressure.

18. The emergency vehicle pre-emption sensor cable shall be Opticom Detector Cable Model No. 138. The cable shall not be spliced.

19. The Econolite Terra Branch cable (part No. 1175-01X) shall be installed for the video camera, unspliced, from the video camera to the traffic signal controller cabinet.

20. The Tucson Electric Power Company Construction Department (918-8300) shall be contacted by the Contractor to verify the location of the electric service connection at the intersection. The Contractor shall be responsible for excavating and backfilling the trench and installing any necessary sleeves under sidewalks or driveways in which the electric service cable in condult (CIC) is to be installed by TEP.

21. PCDOT shall contract separately with Smartwave Technologies, Inc., to provide and install wireless communications devices and PTZ cameras at all new signalized intersections. Smartwave Technologies staff shall install the wireless communications devices and PTZ cameras after the Contractor's electrical work is complete and signals at the intersection are operational. At existing signalized intersections that already have wireless communications and PTZ cameras, PCDOT shall arrange to have the existing equipment removed or relocated by Smartwave Technologies,and subsequently installed on the new poles and mast arms after the Contractor's work is finished.

22. All vehicle and pedestrian indications shall be LED. All vehicle and pedestrian LED signal indications shall be the GE Lumination GTX series or GTI series with tinted lenses to the color of the indication and be ETL certified or approved equal. All pedestrian signal faces shall be GTI series pedestrian count down indications.

23. The Contractor shall contact Blue Stake at 1-800-782-5348, a minimum of 2 working days prior to any excavation.

24. The Contractor shall maintain and allow access to all Pima County Waste Water manholes located within the ROW. Access must be maintained 24 hours per day, seven days per week. No electrical utilities may be placed within six (6) feet of a force main.

25. Any equipment and/or utilities within the project limits that are damaged or destroyed by the Contractor shall be repaired or replaced at the sole expense of the Contractor.

26. The traffic signal operation at existing signalized intersections shall be maintained throughout the duration of the project with existing, temporary, or new traffic signal equipment.

27. Conduits for future use shall be sealed with a properly sized tapered polyethylene duct plug at each termination point. The #8 bare bond wire shall be looped through the plug pull tab and two feet of slack doubled back into the conduit.

28. The face of any vehicle or pedestrian signal head that is not in service shall be covered with a prefabricated nylon cover designed to completely cover the visors and lenses. The covers shall be securely held in place by integral nylon straps and buckles. The cover shall have a fine mesh strip through the center to permit testing of the signals without removing the cover. Out of service signal heads shall not be turned, covered with burlap, cardboard or other material.

29. The location of utilities shown on the plans is approximate. The Contractor is responsible for verifying / potholing underground utilities in the vicinity of the proposed pole foundations. The Contractor is also responsible for verifying clearance between overhead lines and traffic signal equipment prior to installation of poles and foundations.

30. Upon commencement of work, traffic control devices shall be posted and maintained by the Contractor until such a time as the work is complete. All traffic control devices shall be in accordance with the most recent edition of the Manual of Uniform Traffic Control Devices as adopted by Pima County and approved by the Engineer. All traffic control devices on federally funded projects shall be in accordance with the most recent edition of the Manual of Uniform Traffic Control Devices as adopted by ADOT and approved by the Engineer.

RESPONSIBILITIES:

1. The Contractor shall supply and install all equipment and materials for the installation of the traffic signal as specified on the approved plans and in the project specifications.

2. The Contractor shall deliver the controller assembly(s) which includes the controller cabinet, the controller(s), the Opticom Model 764 multimode phase selector, the Opticom Model 768 auxiliary interface panel, and other auxiliary equipment specified in the approved plans and project specifications to the PCDOT Maintenance Yard, 1313 S. Mission Road, Bldg. #28 for testing. This shall occur a minimum of two weeks prior to the installation(s) at the intersection(s). Contact signal shop supervisor (724-5887) at least 2 working days prior to the delivery of the controller assembly(s) to PCDOT. PCDOT staff shall transport the controller assembly(s) from the PCDOT Maintenance Yard to the intersection(s) after the PCDOT staff has tested the equipment.

3. PCDOT staff shall install each traffic controller cabinet on its foundation and route all of the conductors into the controller cabinet. The PCDOT staff shall terminate the field conductors in the controller cabinet.

4. The Contractor shall carefully disassemble and salvage all existing traffic signal equipment that is not to remain, except existing wireless communications and PTZ camera equipment. All of the equipment shall be safely stored at the construction site until it is reinstalled or safely returned to the PCDOT Maintenance Yard, 1313 S. Mission Rd. The equipment shall be safely unloaded by the Contractor. Contact Signal Shop Supervisor (724-5887) at least 2 working days prior to returning the equipment.

5. The Contractor shall provide all traffic signs, except for the overhead Metro street name signs. PCDOT shall fabricate all overhead Metro street names signs for the designated intersection and provide them to the Contractor for installation. The Contractor shall notify the traffic signal inspector a minimum of 5 working days prior to Metro street name sign installation. The Contractor shall provide all mounting hardware for traffic signs and Metro street name signs. The mounting hardware required for the installation of a Metro street name sign is a Pelco Bracket (AS-304-48-PNC), a Pelco Gusseted Tube (AB-0390-94-PNC), and four - Pelco 4" sign clamps (AB-0502-04-PNC) or approved equals. The Contractor shall install all signs.

6. The Contractor shall provide all materials and install all pavement markings required to complete the project.

7. The new traffic signal will not be energized until all permanent signal related signs have been installed in their permanent locations and verified in place and all crosswalks, stop bars, and interim striping has been painted in it's permanent location. All vehicle and pedestrian detection associated with the new signal must be installed and active. Once the new signal has been energized, traffic must be maintained on the appropriate side of the median. The re-alignment of new signal heads will not be permitted to accommodate lane shifts. The new signal phasing and operation will not be adjusted to accommodate lane shifts. Timing changes and temporary phase omissions will be permitted. The Pima County signal inspector must approve of the conditions prior to traffic signal turn. The Contractor must notify the Pima County signal inspector of their intent to energize the signal a minimum of 5 working days prior to turn-on.

8. Unless specifically identified for removal as part of this project, it is the Contractors responsibility to repair/restore any landscaping, irrigation, or hardscape that may have been damaged or disturbed by the construction activities. the Contractor shall obtain prior approval from the Operations Division Public Works Supervisor (724-2639) before any plants are moved.

Priscilla S. Cornelio, P.E., Director

No.	Revision Description	Engineer	Date

		Date
Designed	JAV	
Drawn	CPG	11/15
Checked	JJK	11/15
Proj. Engr.	JAV	11/15

EXPIRES 09/30/2016

PARSONS BRINCKERHOFF
177 N. CHURCH AVE., STE. 610
TUCSON, AZ. 85701
(520) 882-6424

Arizona Blue Stake
1-800-STAKE-IT
1-800-782-5348
Call at least two working days before you dig

Pima County Department of Transportation

TRAFFIC SIGNAL PLAN
SUNSET ROAD - SEGMENT 1
SILVERBELL RD. TO I-10

PROJECT NO. 4RTSUN

SUNSET ROAD – SILVERBELL ROAD TO I-10 – PROJECT NO. 4RTSUN

Scale:	N/A	Sheet TS01 of TS04	Page 60 of 203

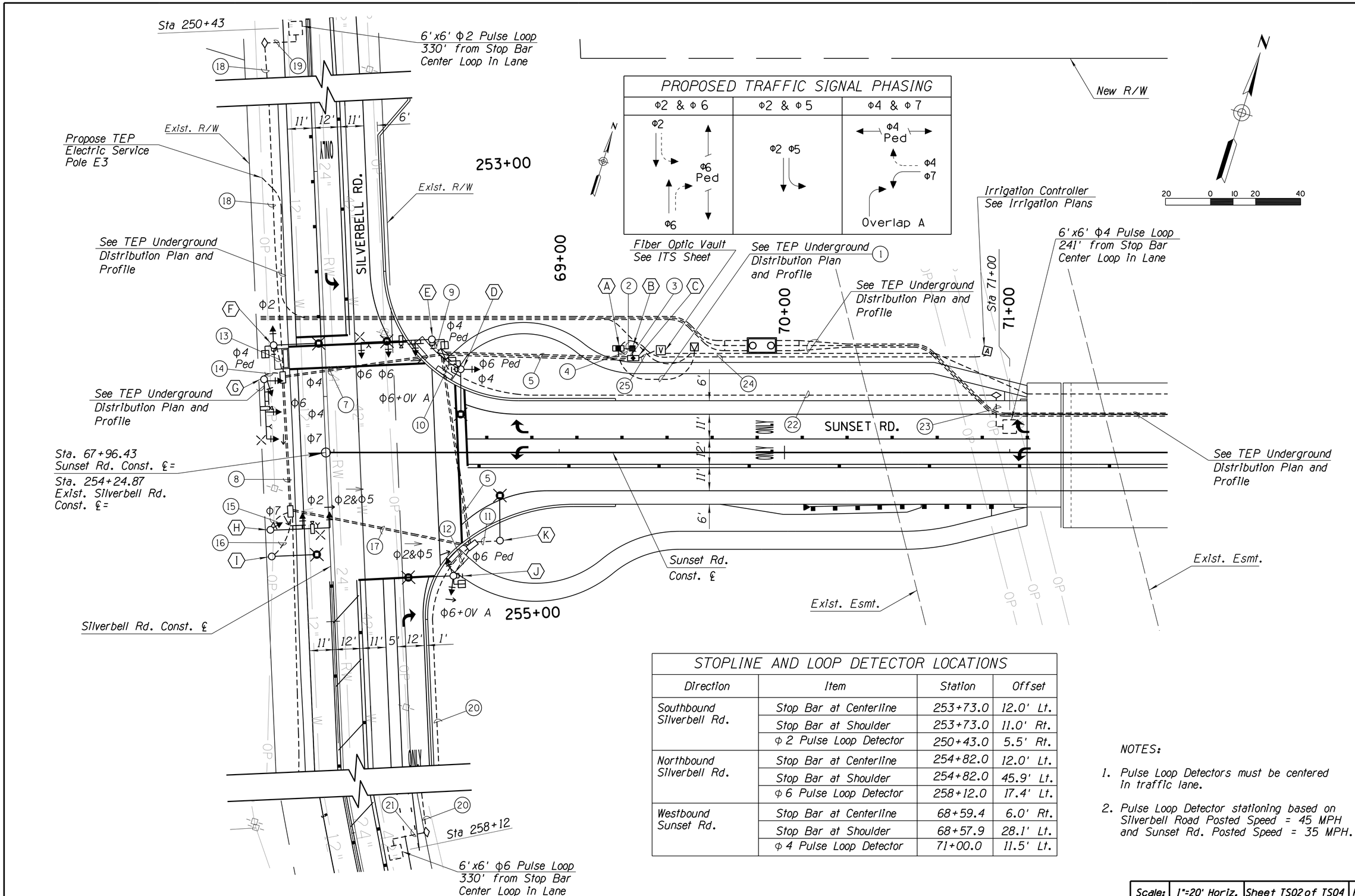

STOPLINE AND LOOP DETECTOR LOCATIONS

Direction	Item	Station	Offset
Southbound Silverbell Rd.	Stop Bar at Centerline	253+73.0	12.0' Lt.
	Stop Bar at Shoulder	253+73.0	11.0' Rt.
	Φ 2 Pulse Loop Detector	250+43.0	5.5' Rt.
Northbound Silverbell Rd.	Stop Bar at Centerline	254+82.0	12.0' Lt.
	Stop Bar at Shoulder	254+82.0	45.9' Lt.
	Φ 6 Pulse Loop Detector	258+12.0	17.4' Lt.
Westbound Sunset Rd.	Stop Bar at Centerline	68+59.4	6.0' Rt.
	Stop Bar at Shoulder	68+57.9	28.1' Lt.
	Φ 4 Pulse Loop Detector	71+00.0	11.5' Lt.

NOTES:

1. Pulse Loop Detectors must be centered in traffic lane.
2. Pulse Loop Detector stationing based on Silverbell Road Posted Speed = 45 MPH and Sunset Rd. Posted Speed = 35 MPH.

Priscilla S. Cornelio, P.E., Director

		Date
Designed	JAV	11/15
Drawn	CPC	11/15
Checked	JJK	11/15
Proj. Engr.	JAV	11/15

No.	Revision Description	Engineer	Date

EXPIRES 09/30/2016

PARSONS BRINCKERHOFF
177 N. CHURCH AVE., STE. 610
TUCSON, AZ. 85701
(520) 882-6424

Arizona Blue Stake
1-800-STAKE-IT
1-800-782-5348

Pima County Department of Transportation

TRAFFIC SIGNAL PLAN
SUNSET ROAD - SEGMENT 1
SILVERBELL RD. TO I-10

PROJECT NO. 4RTSUN

SUNSET ROAD – SILVERBELL ROAD TO I-10 – PROJECT NO. 4RTSUN

Scale: 1"=20' Horiz. | Sheet TS02 of TS04 | Page 61 of 203

FILE NAME: T:\11542C Sunset\Signal\4RTSUN_Signal01.dgn

Thu 12 Nov 2015, 16:51:33

CABINET AND POLE SCHEDULE

TRAFFIC SIGNAL CONTROLLER				REMARKS	LOCATION	STANDARDS
CABINET	TYPE	CONTROLLER	AUX. CONTROLLER			
Ⓐ	MYERS 125 AMP 120/240 V. MEUG 16-125WTB	METERED SERVICE	SINGLE POLE BREAKERS: (1) 30 AMP - SIGNAL (1) 50 AMP - LIGHTING (1) 20 AMP - IRRIGATION	SHARE FOUNDATION W/UPS. FOUNDATION SIZE IS 66"L X 36"W X 24"D	LOCATED BY ENGINEER IN THE FIELD. MIN. 12 FEET BEHIND EDGE OF CURB TO THE STREET SIDE OF FOUNDATION AND MIN. 18 FEET FROM NEAR EDGE OF THROUGH LANE.	T1801
Ⓑ	MYERS BC1280 W/MP 2000E OR ALPHA EQUIVALENT WITH PULL OUT SHELVES	ICBM SNMP CARD & 4 ALPHA CELL 195 GXL BATTERIES		SHARE FOUNDATION W/PEDESTIAL FOUNDATION SIZE IS 66"L X 36"W X 24"D	LOCATED ADJACENT TO ELECTRIC SERVICE PEDESTAL ON A SHARED OR COMMON FOUNDATION WITH SAME MINIMUM CLEARANCES TO CURB OR NEAR EDGE OF THROUGH LANE.	
Ⓒ	NEMA TS2-1-1998 TYPE IV. TS2 SIZE 6 CABINET. W/DETECTOR RACK CONFIGURATION 1 and DUAL DOOR	NEMA TS2 TYPE 2. ECONOLITE MODEL COBALT OR EQUAL	16 CHANNEL MMU. RACK MOUNTED LOOP DETECTORS. NEMA SOLID STATE LOAD SWITCHES. VIDEO DETECTION. A 3 POLE STREET LIGHTING CONTACTOR. (3) 20 AMP CIRCUIT BREAKERS. 3 CHANNEL AMPLIFIER. AND EVP DISCRIMINATOR		LOCATED BY ENGINEER IN THE FIELD. MIN. 12 FEET BEHIND EDGE OF CURB TO THE STREET SIDE OF FOUNDATION AND MIN. 18 FEET FROM NEAR EDGE OF THROUGH LANE.	T203 T312

POLE		MAST ARM		SIGNALS		LUMINAIRE	PED PB TYPE/SIGN	REMARKS	STATION (Road)	OFFSET	TOP OF FND. ELEV.	STANDARDS
NUMBER	TYPE	SIGNAL	LUMIN	MTG	FACE							
Ⓓ Ⓕ F	Type 2B	-	-	(1) V (1) XI	(1) F (1) PED	LED. 280 Watt Type III FULL CUTOFF	TYPE I 2" ADA PPB & PPB SIGN R10-3eAZ (R)		Ⓓ 68+56.9 Sunset Rd. Ⓕ 253+76.3 Silverbell Rd.	36.3' LT 21.2' RT	2221.0 2221.4	T 417 T 909 T 418 T 1101 T 445 T 801 T 802 T 803 T 804 T 903
Ⓔ 12' F F Q	'Q'	30'	20'	(1) XI (3) ASTRO BRAC	(2) F (1) Q (1) PED	LED. 280 Watt Type III FULL CUTOFF	TYPE I 2" ADA PPB & PPB SIGN R10-3eAZ (L)	INSTALL PHOTOCELL ON LUMINAIRE INSTALL CAMERA ON LUMINAIRE MAST ARM INSTALL OPTICOM DETECTOR 711	Ⓔ 68+43.5 Sunset Rd.	50.2' LT	2221.0	T 412 T 909 T 417 T 1101 T 418 T 1901 T 801 T 1902 T 802 T 1903 T 803 T 1905 T 804
Ⓖ 12' F R F F	'J'	25'	-	(1) VII (2) ASTRO BRAC	(3) F (1) R W/ARROWS FACING LEFT FOR Φ7	-	-	INSTALL CAMERA W/EXTENSION ON SIGNAL MAST ARM INSTALL OPTICOM DETECTOR 711	Ⓖ 253+91.3 Silverbell Rd.	26.0' RT	2221.9	T 410 T 1901 T 417 T 1902 T 418 T 1903 T 801 T 1905 T 802 T 803 T 903
Ⓗ 12' R Q F	'J'	25'	-	(1) V (2) ASTRO BRAC	(1) F (1) Q (1) R W/ARROWS FACING LEFT FOR Φ7	-	-	INSTALL CAMERA W/EXTENSION ON SIGNAL MAST ARM INSTALL OPTICOM DETECTOR 711	Ⓗ 254+58.1 Silverbell Rd.	26.0' RT	2221.6	T 410 T 1901 T 417 T 1902 T 418 T 1903 T 801 T 1905 T 802 T 803 T 903
Ⓘ Ⓚ	Type 2B	-	-	-	-	LED. 280 Watt Type III FULL CUTOFF	-		Ⓘ 254+70.0 Silverbell Rd. Ⓚ 68+73.7 Sunset Rd.	26.0' RT 39.1' RT	2221.8 2221.0	T 445
Ⓙ Q Q	Type 2B	-	-	(1) VII (1) XI	(2) Q (1) PED	LED. 280 Watt Type III FULL CUTOFF	TYPE I 2" ADA PPB & PPB SIGN R10-3eAZ (R)		Ⓙ 68+53.0 Sunset Rd.	54.8' RT	2220.6	T 417 T 909 T 418 T 1101 T 445 T 801 T 802 T 803 T 804 T 905

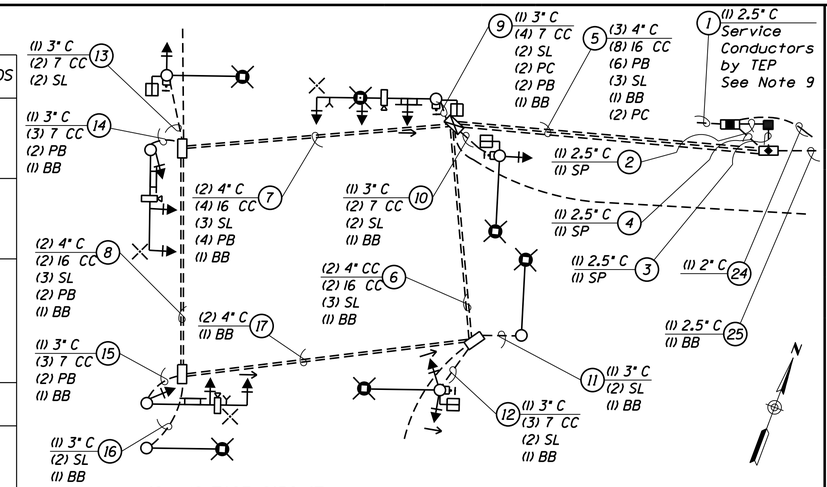

HIGH VOLTAGE CIRCUIT

(X) Y" C	=	Number and Size of Conduit
(X)	=	Number of Cables
#CC	=	#14 IMSA Cable
BB	=	Bare Bond. #8. Solid
PB	=	Pre-Empt Beacon. #14 THW
SP	=	Signal Power (See Detail Sheet)
SL	=	Street Lighting. #10 AWG XHHW
PC	=	Photo Cell. #10 AWG XHHW

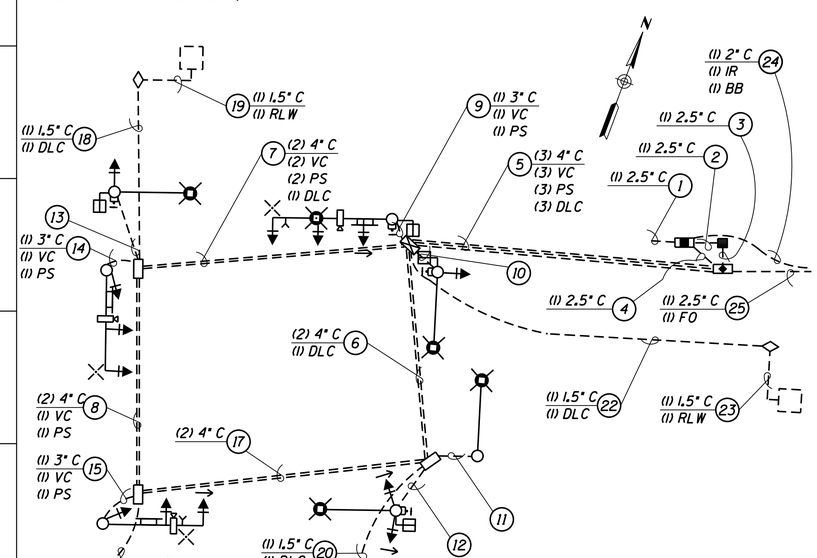

LOW VOLTAGE CIRCUIT

(X) y" C	=	Number and Size of Conduit
(X)	=	Number of Cables
VC	=	Video Detection Cable Econolite Part # 1175-00X
PS	=	Pre-empt Sensor. Opticom #20 3 CC-Shielded Cable (Model 138)
TI	=	Telephone Interconnect. 4CC #20
DLC	=	Detector Lead-In Cable. 16 AWG IMSA 50-2-1984
RLW	=	Roadway Loop Wire. 14 AWG IMSA 51-5-1985.
IR	=	Irrigation
FO	=	Fiber Optic Cable. See (Detail Sheet)

NOTES

1. Astro-Brac mounting assemblies shall be Pelco Astro-Brac part number AS-0116. or equivalent.
2. All luminaires shall have photocell receptacles. All photocell receptacles shall have shorting cap. except for the luminaire with photocell.
3. Pedestrian push button to be at 42 inches above finish grade to center of push button.
4. Furnish and install pedestrian push button sign R10-3eAZ with appropriate arrow per ADOT Manual of Approved Signs.
5. The welded tenon at end of mast arm for Astro-Brac shall be located 6 inches from the tip of mast arm center hole of tenon.
6. PCDOT will contract with Smartwave Technologies. Inc. Under a separate Purchase Order to provide and install PTZ camera and wireless communications device.
7. Refer to this Sheet for the Metro Street Name sign details. Font Shall be Clearview 2.
8. Address for the New Electric Service is 5422 N. Silverbell Road.
9. Electric Service shall be to TEP supplied transformer. See TEP Underground Distribution Plan and Profile.

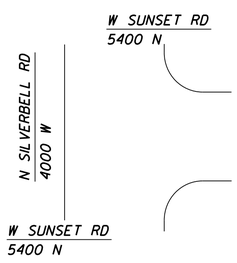

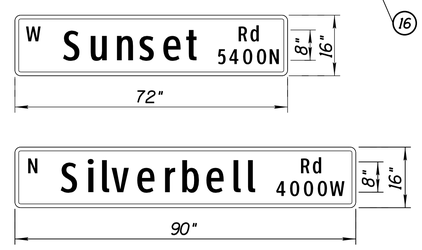

METRO SIGN DETAILS

Priscilla S. Cornelio, P.E., Director

Designed	JAV	11/15
Drawn	CPC	11/15
Checked	JJK	11/15
Proj. Engr.	JAV	11/15

No.	Revision Description	Engineer	Date

EXPIRES 09/30/2016

PARSONS BRINCKERHOFF
177 N. CHURCH AVE., STE. 610
TUCSON, AZ. 85701
(520) 882-6424

Arizona Blue Stake 1-800-STAKE-IT 1-800-782-5348

Pima County Department of Transportation

POLE AND CONDUCTOR SCHEDULE
SUNSET ROAD - SEGMENT 1
SILVERBELL RD. TO I-10

PROJECT NO. 4RTSUN

SUNSET ROAD – SILVERBELL ROAD TO I-10 – PROJECT NO. 4RTSUN

Scale:	N/A	Sheet TS03 of TS04	Page 62 of 203

FILE NAME: T:\11542C Sunset\Signal\4RTSUN_pole&cond sched.dgn

Fri 13 Nov 2015, 09:50:13

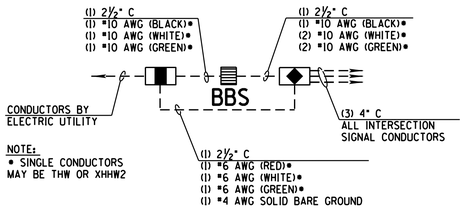

NOTE:
• SINGLE CONDUCTORS MAY BE THW OR XHHW2

BATTERY BACK-UP POWER SUPPLY (BBS) SCHEMATIC DETAIL

N.T.S.

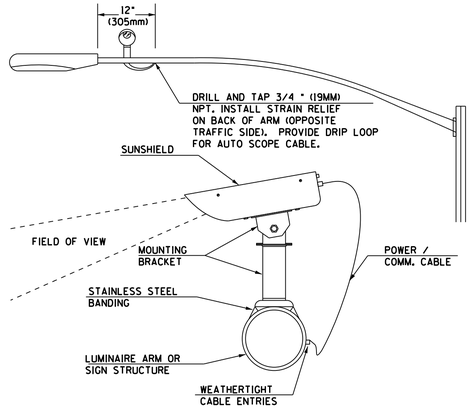

VIDEO DETECTION SYSTEM AUTO SCOPE INSTALLATION

N.T.S.

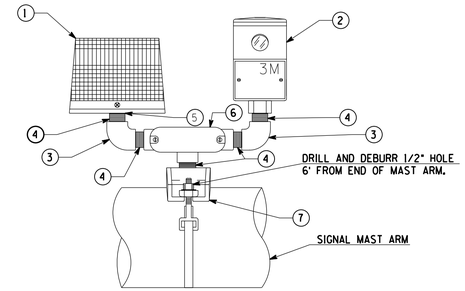

LIST OF MATERIALS		
ITM	QU.	DESCRIPTION
1	1	WHELEN STROBE LIGHT (P/N IS3220LC OR IS3220L)•
2	1	3M OPTICOM DETECTOR (P/N 721 OR 722)•
3	2	3/4" GALVANIZED 90 ELBOWS
4	5	3/4" GALVANIZED CLOSE NIPPLE
5	1	1" - 3/4" REDUCER
6	1	3/4" TB CONDULET
7	1	PELCO ABO155-29

• - AS PER PLAN

PRE-EMPTION MOUNTING ASSEMBLY DETAIL

N.T.S.

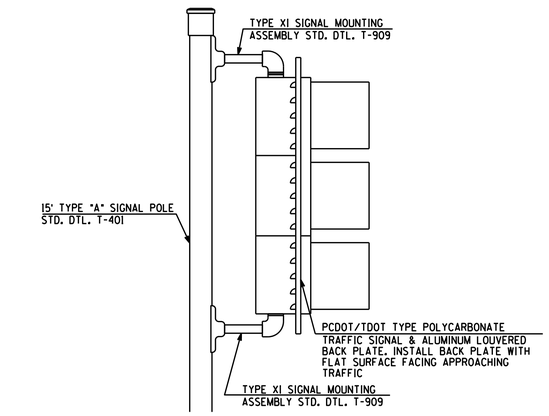

PCDOT A POLE SIGNAL MOUNTING ASSEMBLY & BACKPLATE ORIENTATION

N.T.S.

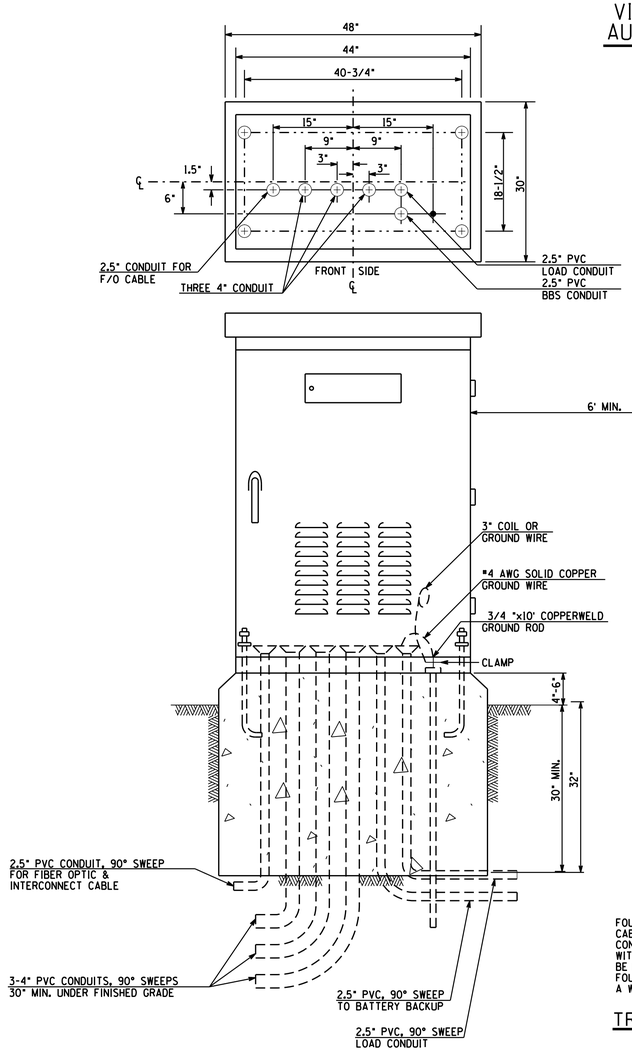

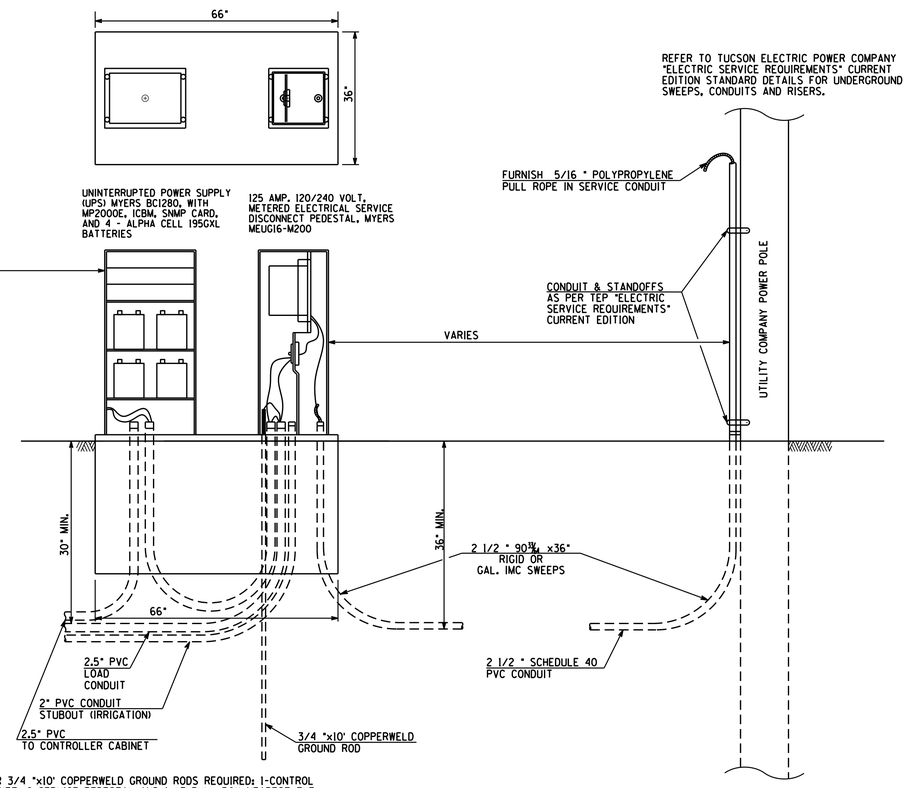

FOUR 3/4 "x10' COPPERWELD GROUND RODS REQUIRED: 1-CONTROL CABINET, 2-SERVICE PEDESTAL AND 1-#7 PULL BOX NEAREST THE CONTROL CABINET. ALL GROUND RODS TO BE CONNECTED TOGETHER WITH #4 AWG SOLID COPPER WIRE. 4" THICK SERVICE PADS SHALL BE PROVIDED ADJACENT TO THE CONTROLLER AND METER/BBS FOUNDATIONS WHICH EXTEND THE LENGTH OF THE FOUNDATION AT A WIDTH OF 36" SERVICE PADSARE INCIDENTAL TO THE FOUNDATIONS.

TRAFFIC SIGNAL ELECTRICAL SERVICE

N.T.S.

REFER TO TUCSON ELECTRIC POWER COMPANY "ELECTRIC SERVICE REQUIREMENTS" CURRENT EDITION STANDARD DETAILS FOR UNDERGROUND SWEEPS, CONDUITS AND RISERS.

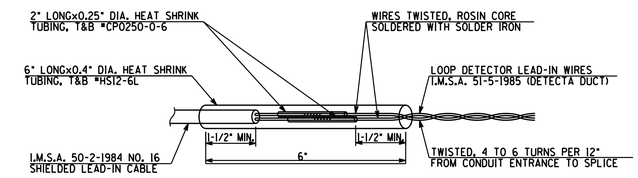

LOOP DETECTOR SPLICE

N.T.S.

1. LOOPS INSTALLED IN THE FINAL LIFT OF PAVEMENT SHALL BE SEALED WITH BLACK 3M DETECTOR LOOP SEALANT 5000 OR APPROVED EQUAL. LOOPS IN THE LEVELING COURSE MAY USE AN APPROVED ASPHALTIC EMULSION.
2. ALL 6'x6' LOOPS SHALL BE WOUND IN A CLOCKWISE DIRECTION.
3. TAG EACH LOOP WIRE AT THE PULL BOX AS START (S), OR FINISH (F). LOOPS SHALL BE IDENTIFIED PER LANE AND DIRECTION AS PER STANDARD SPECIFICATIONS.
4. ALL SIDE BY SIDE 6'x6' LOOPS TO BE CONNECTED IN SERIES (START TO FINISH TO START TO FINISH, ETC.).

LOOP INSTALLATION NOTES

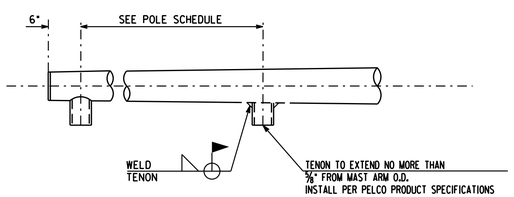

TENON DETAIL

N.T.S.

Priscilla S. Cornelio, P.E., Director

No.	Revision Description	Engineer	Date

		Date
Designed	JAV	11/15
Drawn	CPC	11/15
Checked	JJK	11/15
Proj. Engr.	JAV	11/15

EXPIRES 09/30/2016

PARSONS BRINCKERHOFF
177 N. CHURCH AVE., STE. 610
TUCSON, AZ. 85701
(520) 882-6424

Arizona Blue Stake
1-800-STAKE-IT
1-800-782-5348

Pima County Department of Transportation

DETAIL SHEET
SUNSET ROAD - SEGMENT I
SILVERBELL RD. TO I-10
TRAFFIC SIGNAL DETAIL SHEET
PROJECT NO. 4RTSUN

SUNSET ROAD – SILVERBELL ROAD TO I-10 – PROJECT NO. 4RTSUN

Scale:	NTS	Sheet TS04 of TS04	Page 63 of 203

FILE NAME: T:\11542C Sunset\Signal\4RTSUN_pcdot dtl sht.dgn

Thu 12 Nov 2015, 16:51:13

ITS CONDUIT GENERAL NOTES:

1. All equipment/materials and construction shall meet or exceed the requirements contained in the current PCDOT Street Lighting and ITS Conduit Design (Manual), the Pima Associations of Governments (PAG) Standard Specifications and Standard Details For Public Improvements, the Special Provisions and the approved plans.
2. Pull boxes and vaults shown on plans are diagrammatic representations. The exact location of each vault or pull box shall be approved by the Traffic Engineer prior to installation.
3. Vaults shall be used for long runs of conduit. The maximum spacing between vaults is 1,500 feet.
4. The maximum spacing between ITS pull boxes or between an ITS pull box and a vault shall be 600 feet.
5. At all signalized intersections, a 2.5 inch PVC conduit shall be installed from the traffic signal controller to the adjacent ITS pull box or vault.
6. The top of the vaults and pull boxes shall be level with the surrounding finished grade. If the slope or shoulder drops off from finished grade, the contractor shall grade around the vault or pull box.
7. Vaults shall maintain a minimum of six (6) feet horizontal distance from existing water mains, measured from outside of the wall of the vault to the outside of pipe wall.
8. ITS pull boxes shall be a 30 inch x 48 inch Pencell box or approved equal.
9. Vaults shall be precast concrete with a minimum outside dimension of 48 inches long by 48 inches wide by 50 inches high.
10. Pull boxes shall not be installed within concrete curb access ramps or landings. In addition, any pull boxes installed behind curbs shall be installed between the curb and the proposed/future sidewalk or beyond the proposed/future sidewalk. An exception to this note would be pull boxes installed in a median. Any pull boxes installed along an uncurbed roadway shall be installed 10 feet from edge of pavement to edge of pull box where right-of-way permits or as far from pavement as practical when there is insufficient right-of-way to provide the 10-foot offset.
11. A three-quarter (3/4) inch x ten (10) foot ground rod shall be installed in every ITS vault and ITS pull box. Two (2) ground rod clamps shall be furnished and installed for each ground rod for clamping the ground wire.
12. The conduit locations shown on the approved plans are diagrammatic representations only. The location of the conduit may be adjusted in the field to avoid conflicts. The contractor shall obtain approval prior to installation. All conduits shall be installed within existing right-of-way unless otherwise approved.
13. Conduit installed under existing paved driveways, that are not scheduled to be reconstructed as part of this project, shall be installed by means of boring.
14. All conduit shall be installed a minimum of 36 inches below finished grade, except when conduits cross culverts or are routed along bridge and wing walls. Any conduit installed less than 36 inches deep shall be encased in concrete per PAG Standard Specifications.
15. Only new conduit shall be installed. All ITS interconnect conduit shall be four (4) inch PVC Schedule 40 unless noted otherwise. Conduit adjacent to curb shall be installed six (6) inches behind the back of curb and 42 inches below the top of curb.
16. All conduits shall be cleaned by compressed air. A properly sized conduit piston or mandrel shall be pulled through the conduit prior to innerduct installation.
17. When shown on the plans, four (4) each-one (1) inch innerducts shall be installed within interconnect conduit.
18. When included on the plans, innerducts shall be pre-lubricated with smooth exterior walls and longitudinally ribbed interior walls. Internal spacers which expand and contract at the same rate as the interconnect conduit shall be installed. Anti-reversing gaskets and an o-ring gasket at the bell base are required. Innerducts shall be Claron Telecom Systems multi-gard brand or equivalent. Each innerduct within a single conduit shall be of a different color (orange, brown, blue, and black).
19. If innerducts are installed, all integral innerducts shall have a continuous non-spliced, unknotted detectable 1,250 pound test mule tape installed.
20. Conduits for future use shall be sealed with a properly sized tapered polyethylene duct plug at each termination point. The #8 bare bond wire shall be looped through the plug pull tab and grounded to the ground rod in the pull box or vault. An extra three feet of slack shall be provided on the #8 bare bond in each pull box or vault.
21. When conduit is installed by open trenching, an electronically detectable six (6) inch fiber warning tape shall be installed 18 inches above the interconnect conduit. The tape shall be orange and have the inscription "Caution-Fiber Optic Cable Buried Below".
22. Green tracer conductor shall be installed within each interconnect conduit. The conductor shall be a continuous unsliced stranded CU 6 AWG, rated for 600 volts, and shall have THW or XHHW insulation. The tracer conductor shall be installed on the outside of the innerducts if innerducts are installed.
23. For all conduit installed, a minimum horizontal separation of six (6) feet shall be maintained from landscape irrigation mainlines or water lines.
24. A minimum horizontal separation of 24 inches shall be maintained from all gas lines.
25. Upon commencement of work, traffic control devices shall be posted and maintained by the contractor until such a time as the work is complete. All traffic control devices shall be in accordance with the most recent edition of the Manual on Uniform Traffic Control Devices as adopted by Pima County and approved by the Engineer.

RESPONSIBILITIES:

1. The contractor shall obtain all permits required by all governmental agencies.
2. The contractor shall contact blue stake at 1-800-782-5348, a minimum of two (2) working days prior to any excavation.
3. The contractor shall maintain and allow access to all Pima County wastewater manholes located within the right-of-way. Access must be maintained 24 hours per day, seven days a week. No electrical utilities may be placed within six (6) feet of a force main.
4. The location of utilities shown on the plans is approximate. The contractor is responsible for verifying/potholing underground utilities in the vicinity of the proposed pull boxes or vaults.
5. Any equipment and/or utilities within the project limits that are damaged or destroyed by the contractor shall be repaired or replaced at the sole expense of the contractor.
6. The contractor shall supply and install all equipment and materials specified on the approved plans and in the project specifications.
7. Unless specifically identified for removal as part of this project, it is the contractor's responsibility to repair/restore any landscaping, irrigation or hardscape that may have been damaged or disturbed by the construction activities. The contractor shall obtain prior approval from the Operations Division Public Works Supervisor (724-2639) before any plants are removed.

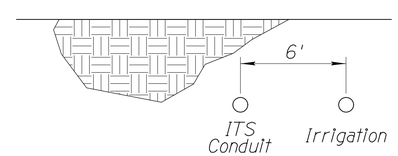

NOTES:

1. A 6' minimum separation is required between the ITS conduits and irrigation mainline.
2. This detail applies wherever irrigation mainline is installed parallel to the ITS trench on the north side of Sunset Rd.
3. Exercise extreme caution wherever irrigation line must cross over the ITS trench.

IRRIGATION MAINLINE/ITS SEPARATION

40' 0 40' 80'
SCALE: 1"=40'

Priscilla S. Cornelio, P.E., Director

No.	Revision Description	Engineer	Date

		Date
Designed	MPK	
Drawn	RM	11/15
Checked	CJR	11/15
Proj. Engr.	MPK	11/15

Registered Professional Engineer (Civil) CERTIFICATE NO. 13456 CHARLES J. ROBINSON DATE SIGNED 11/13/15 EXPIRES 3-31-2017

AECOM
TRANSPORTATION
AECOM USA, Inc.
5151 E. Broadway, SUITE 400
Tucson, Arizona 85705
T 520.887.7800 F 520.887.8438
www.aecom.com

ARIZONA 811 BLUE STAKE, INC. CALL 8 WORK DAYS BEFORE YOU DIG

Pima County Department of Transportation

ITS SYSTEM GENERAL NOTES
SUNSET ROAD - SEGMENT 1
SILVERBELL RD. TO I-10

PROJECT NO. 4RTSUN

SUNSET ROAD - SILVERBELL ROAD TO I-10 - PROJECT NO. 4RTSUN

Scale:	1"=40' Horiz.	Sheet IT01 of IT02	Page 64 of 203

FILE NAME: P:\60311412 Sunset Rd\900-Work\910-CAD\20-SHEETS\4RTSUN_itsgn01_seg1.dgn DATE: 11/13/2015 TIME: 10:45:34 AM MurrietaR

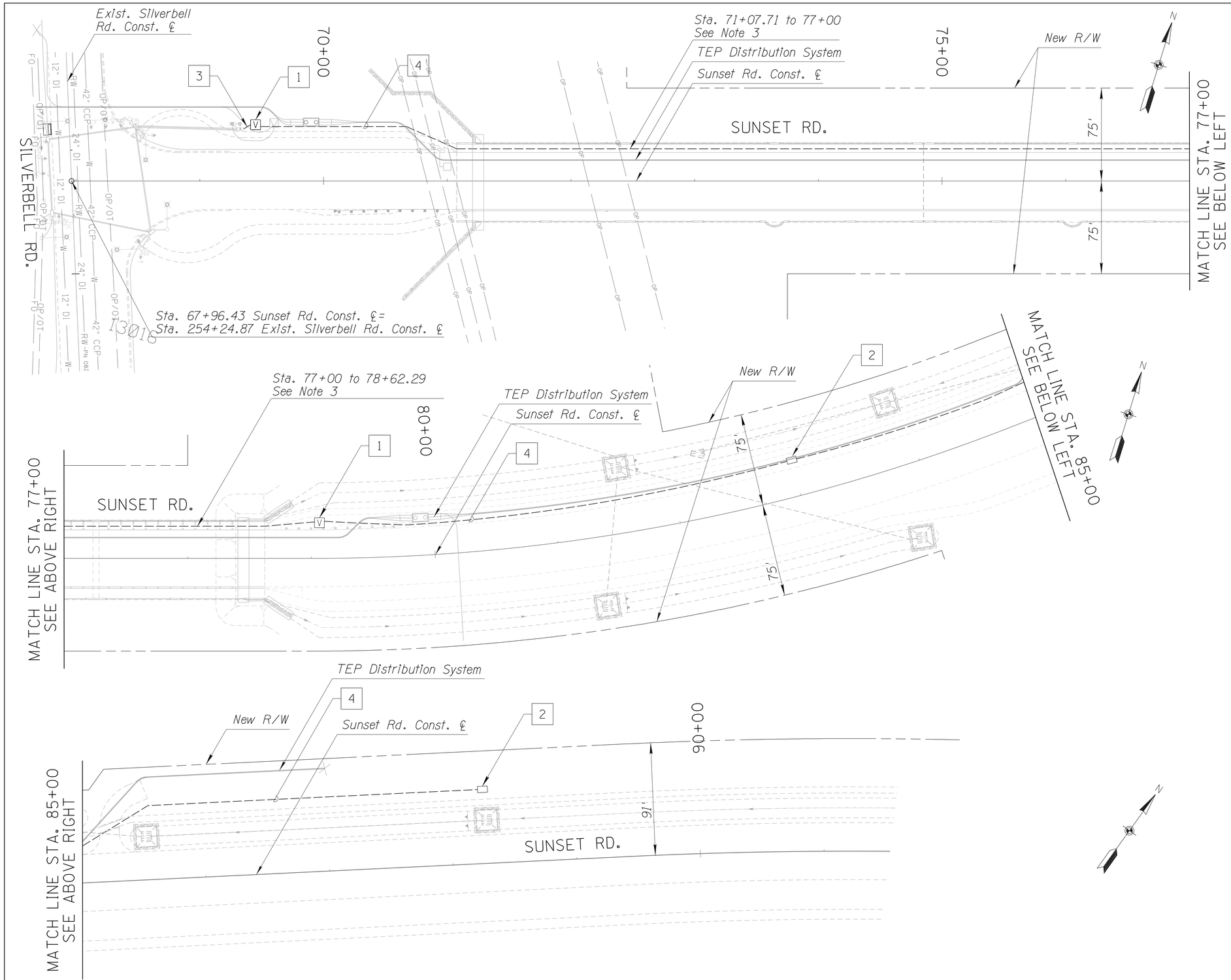

NOTES:

1. All stations and offsets are referenced from the Sunset Rd. Const. ℄.
2. Installation of the fiber optic conduit shall be in accordance with Detail No. FO-100, Sheet No. 7-02 (1 of 6) of the Manual.
3. See Bridge Plans for Installation of the fiber optic conduit (4" PVC) on the bridge.
4. Install the electrical conduit (4" PVC) for the fiber optic in the same trench as the TEP electrical conduit in accordance with SR-209 of Tucson Electric Power's (TEP) Electric Service Requirements (latest edition) and the TEP Underground Distribution System Plans in this plan set as applicable.

NEW ITEMS

1. Fiber Optic Vault Per Sheet No. 7-04 of the Manual
   Sta. 69+45±
   Sta. 79+07±
   Bid Item No. 7320459
   Install 2 EA.
2. Fiber Optic Pull Box Per Sheet No. 7-03 of the Manual
   Sta. 83+00±
   Sta. 88+27±
   Bid Item No. 7320440
   Install 2 EA.
3. New 2½" P.V.C. Conduit
   Tie into Traffic Signal Controller
   Sta. 69+35± to Sta. 69+41±
   Bid Item No. 7320025
   Install 6± L.F.
4. New Electrical Conduit (4") (PVC) for Fiber Optic w/ No. 6 Tracer Wire
   Sta. 69+49± to 88+23±
   Bid Item No. 7320040, Electrical Conduit (4") (PVC)
   Install 1,105± L.F.
   Bid Item No. 7320150, Tracer Wire
   Install 1,105± L.F.
   See Note 4

Priscilla S. Cornelio, P.E., Director

Designed	CJR	11/15
Drawn	RM	11/15
Checked	MPK	11/15
Proj. Engr.	MPK	11/15

No.	Revision Description	Engineer	Date

Registered Professional Engineer (Civil) CERTIFICATE NO. 34462 CHARLES J. ROBINSON Date Signed 11/13/15 EXPIRES 3-31-2017

AECOM

TRANSPORTATION
AECOM USA, Inc.
5151 E. Broadway, SUITE 400
Tucson, Arizona 85705
T 520.887.7800 F 520.887.8438
www.aecom.com

Call at least two full working days before you dig
ARIZONA 811
Blue Stake, Inc.
(602) 263-1100
(800) 782-5348

Pima County Department of Transportation

ITS SYSTEM PLAN VIEW
SUNSET ROAD - SEGMENT I
SILVERBELL RD. TO I-10
STA. 68+00 TO STA. 83+00
PROJECT NO. 4RTSUN

SUNSET ROAD - SILVERBELL ROAD TO I-10 - PROJECT NO. 4RTSUN

Scale:	1"=40' Horiz.	Sheet IT02 of IT02	Page 65 of 203

FILE NAME: P:\60311412 Sunset Rd\900-Work\910-CAD\20-SHEETS\4RTSUN_its01_seg1.dgn DATE: 11/13/2015 TIME: 10:47:12 AM MurrietaR

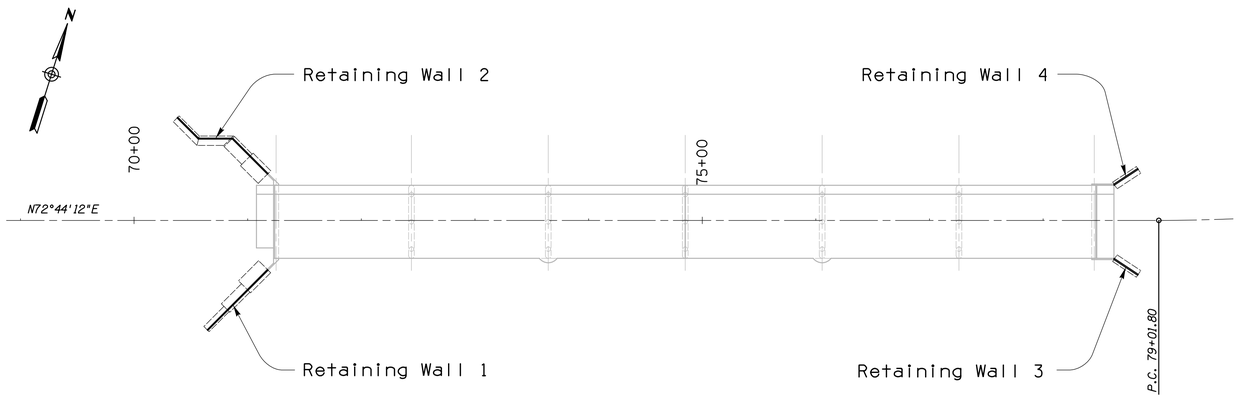

RETAINING WALL KEY PLAN
No Scale

APPROXIMATE WALL QUANTITIES			
Item	6010200 Wall Area (SF)	9330008 Handrail (Std. Dtl. 105) (LF)	9130001 Riprap (Dumped) (CY)
Retaining Wall 1	918	75	7
Retaining Wall 2	1311	100	8
Retaining Wall 3	193	25	2
Retaining Wall 4	190	25	2
Total	2612	225	19
As Built			

Notes:

1. Overexcavation and recompacted area shall be recompacted to achieve a maximum dry density corresponding to 100% of the Standard Proctor effort according to ASTM D698 with compaction moisture content within ±2% of the optimum moisture content.
2. Proof rolling shall be performed on the entire area of subgrade prepared as described in Note 1.
3. Proof rolling shall be done immediately after subgrade compaction while the moisture content of the subgrade is near optimum or at the moisture content that achieved the required compaction.
4. Proof rolling shall be performed with a pneumatic-tired tandem-axle with at least 3 wheels on each axle, a gross weight of 25 tons (50 kips), a minimum tire pressure of 75 psi and a minimum rolling width of 75 in. A Caterpillar PS-300 (or PF-300B) Ingersoll-Rand PT-240R, BOMAG BW24R. Dynamic CP271 or equipment with equivalent capabilities shall be used for proof-rolling.
5. No separate measurement or payment will be made for structure excavation, overexcavation and recompacting, structure backfill and proof-rolling associated with retaining walls, the cost of such work being considered as included in the square foot price for retaining walls.

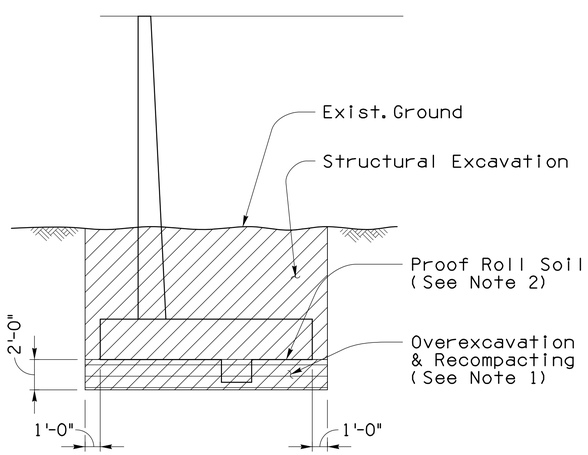

STRUCTURAL EXCAVATION
No Scale

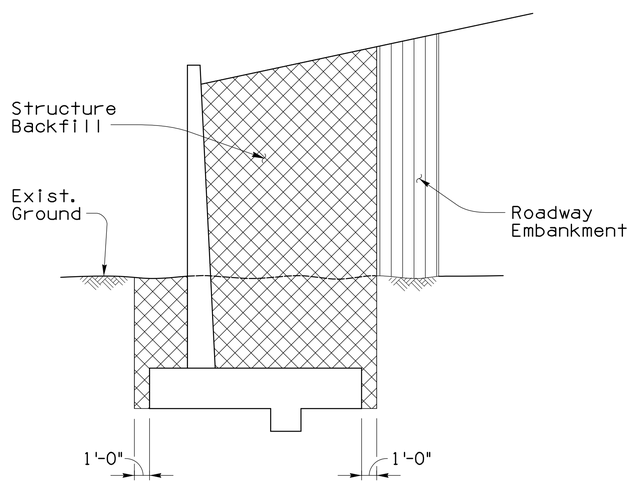

STRUCTURE BACKFILL
No Scale

LEGEND

- Structural Excavation
- Overexcavation & Recompaction
- Structure Backfill
- Roadway Embankment

Priscilla S. Cornelio, P.E., Director

Designed	JAM	Date 11/15
Drawn	JHS, NJL	11/15
Checked	CGP	11/15
Proj. Engr.	JAM	11/15

No.	Revision Description	Engineer	Date

Structural Grace, Inc
1101 E. Fort Lowell Rd., Ste. 200, Tucson, AZ 85719 (520) 320-0156

Call us least two full working days before you begin excavation.
ARIZONA 811
Arizona Blue Stake, Inc.
Dial 8-1-1 or 1-800-STAKE-IT (782-5348)
In Maricopa County: (602) 263-1100

RETAINING WALL BACKFILL & EXCAV.
SUNSET ROAD - SEGMENT 1
SILVERBELL RD. TO I-10

PROJECT NO. 4RTSUN

Pima County Department of Transportation

SUNSET ROAD - SILVERBELL ROAD TO I-10 - PROJECT NO. 4RTSUN

Scale:	As Noted	Sheet RW01 of RW04	Page 66 of 203

FILE NAME: W:\Jobs\2013\1326_Sunset\1326_Working\1326_Sunset_RW01_RW1.dgn DATE: 11/16/2015 TIME: 4:32:52 PM MLichtenstein

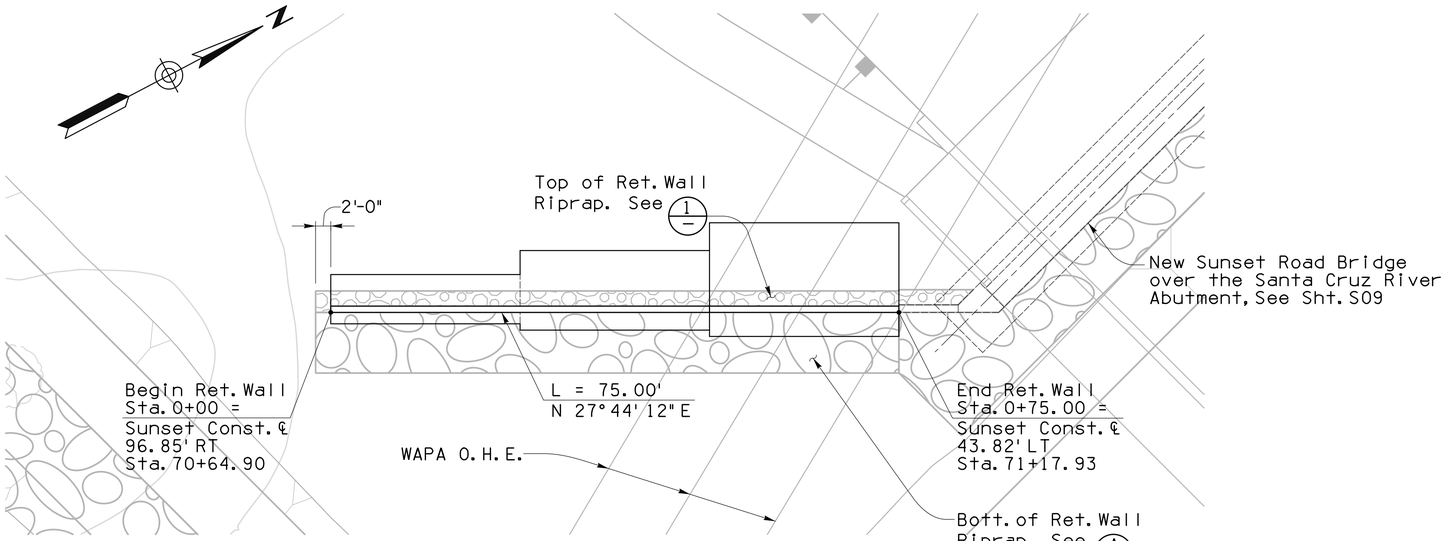

PLAN - RETAINING WALL 1
1" = 10'

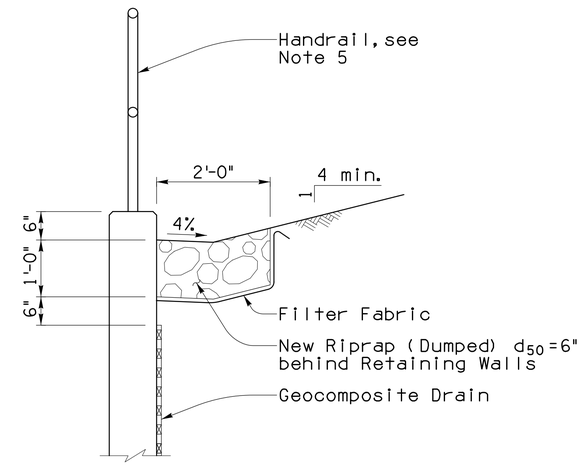

GRADATION D = 6"	
% Passing	Size (in)
100-90	12"
85-70	9"
50-30	6"
15-5	4"
5-0	2"

TOP OF
RETAINING WALL DETAIL
3/4" = 1'-0"
1/— RW03 1/RW04

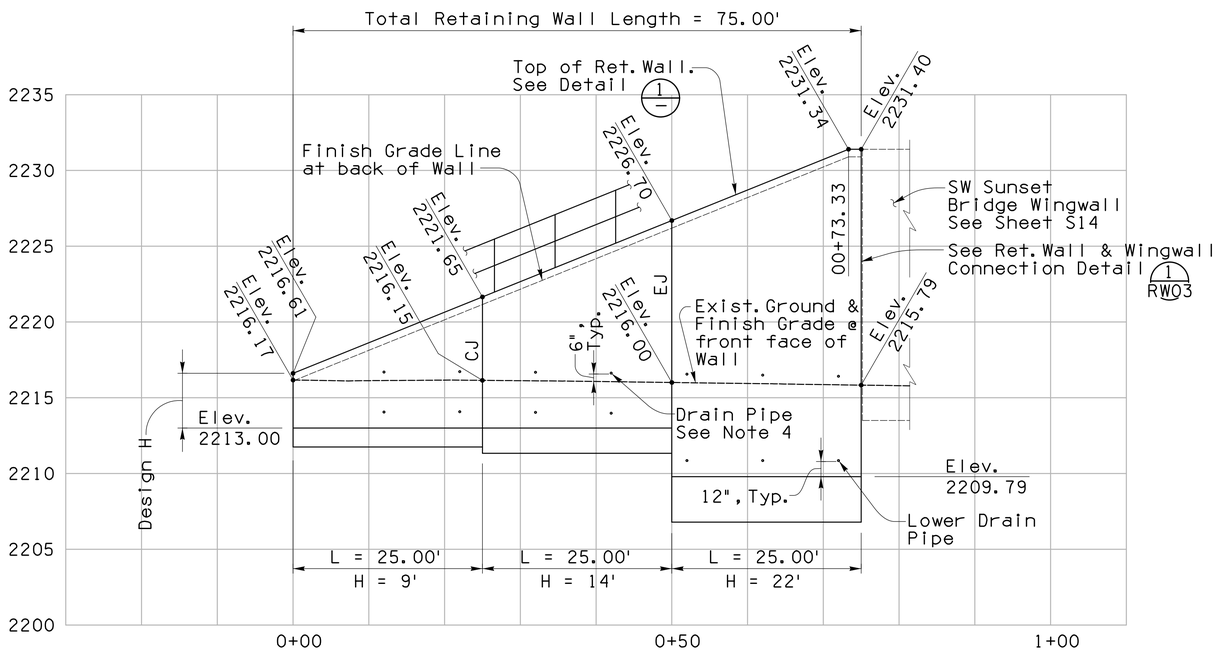

ELEVATION - RETAINING WALL 1
Horiz. 1" = 10'
Vert. 1" = 5'

Notes:

1. Retaining Wall 1 shall conform to ADOT Std. Dwgs. SD 7.01 (1 to 5) Case III and shall be paid under Item No. 6010200.
2. The Stations and Offsets shown in the plan view indicate the face of the Retaining Wall farthest from Sunset Const. ℄.
3. Footing shall be continuous except @ expansion joints:

   CJ = Construction Joint
   EJ = Expansion Joint

4. Provide drain pipes at 10'-0" o.c. See SD 7.01.
5. Handrail and handrail connection to the Retaining Wall per Pima Association of Governments (PAG) Standard Detail No. 105 (Standard lower Rail Location).
6. Handrail shall be installed until all fill behind retaining wall has been placed.
7. Provide End Treatment A from PAG Std. Detail 105 for handrails.

Priscilla S. Cornelio, P.E., Director

Designed	JAM		Date
Drawn	JHS, NJL		11/15
Checked	CGP		11/15
Proj. Engr.	JAM		11/15

No.	Revision Description	Engineer	Date

Structural Grace, Inc
1101 E. Fort Lowell Rd., Ste. 200, Tucson, AZ 85719 (520) 320-0156

Call at least two full working days before you begin excavation.
ARIZONA 811
Arizona Blue Stake, Inc.
Dial 8-1-1 or 1-800-STAKE-IT (782-5348)
In Maricopa County: (602) 263-1100

Pima County Department of Transportation

RETAINING WALL 1 - PLAN & ELEVATION
SUNSET ROAD - SEGMENT 1
SILVERBELL RD. TO I-10

PROJECT NO. 4RTSUN

SUNSET ROAD - SILVERBELL ROAD TO I-10 - PROJECT NO. 4RTSUN

Scale:	As Noted	Sheet RW02 of RW04	Page 67 of 203

FILE NAME: W:\Jobs\2013\1326_Sunset\1326_Working\1326_Sunset_RW02_RW2.dgn DATE: 11/16/2015 TIME: 4:32:54 PM MLichtenstein

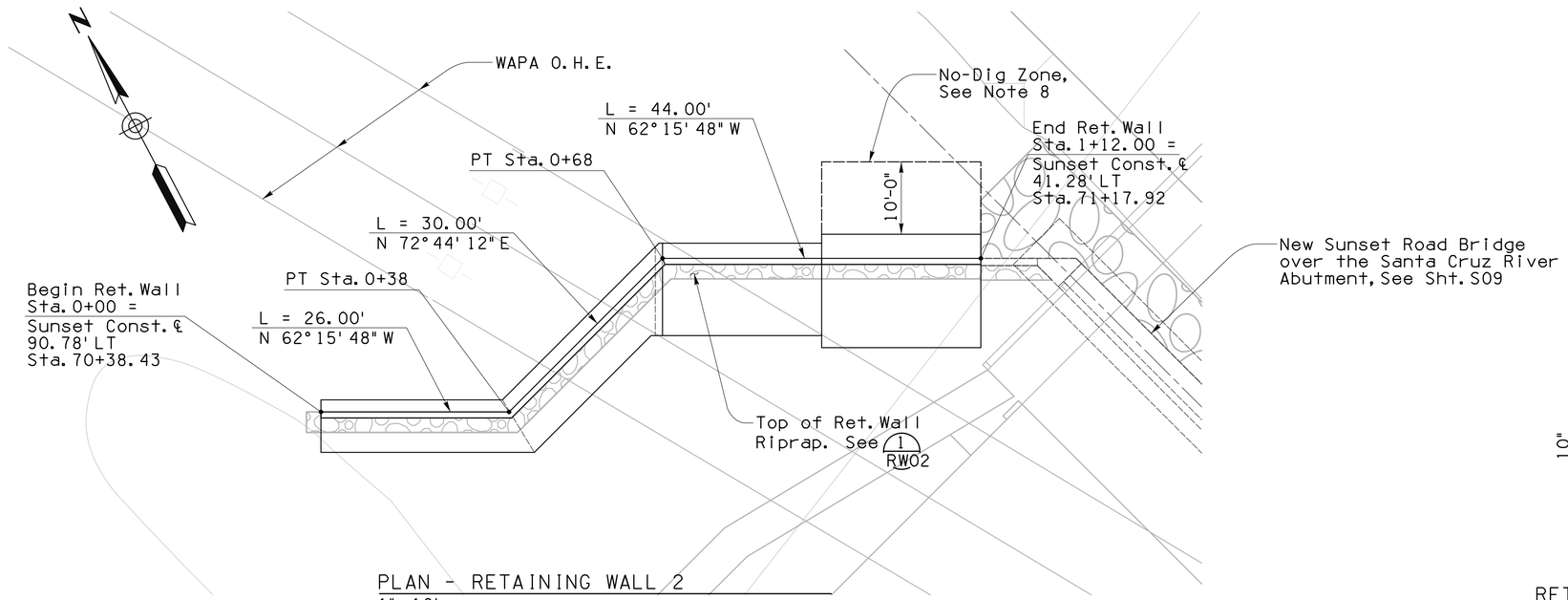

PLAN - RETAINING WALL 2
1" = 10'

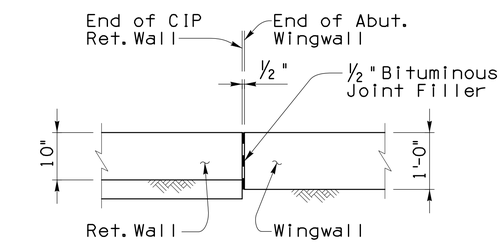

RETAINING WALL &
WINGWALL CONNECTION DETAIL 1/RW02 1/RW04
3/4" = 1'-0"

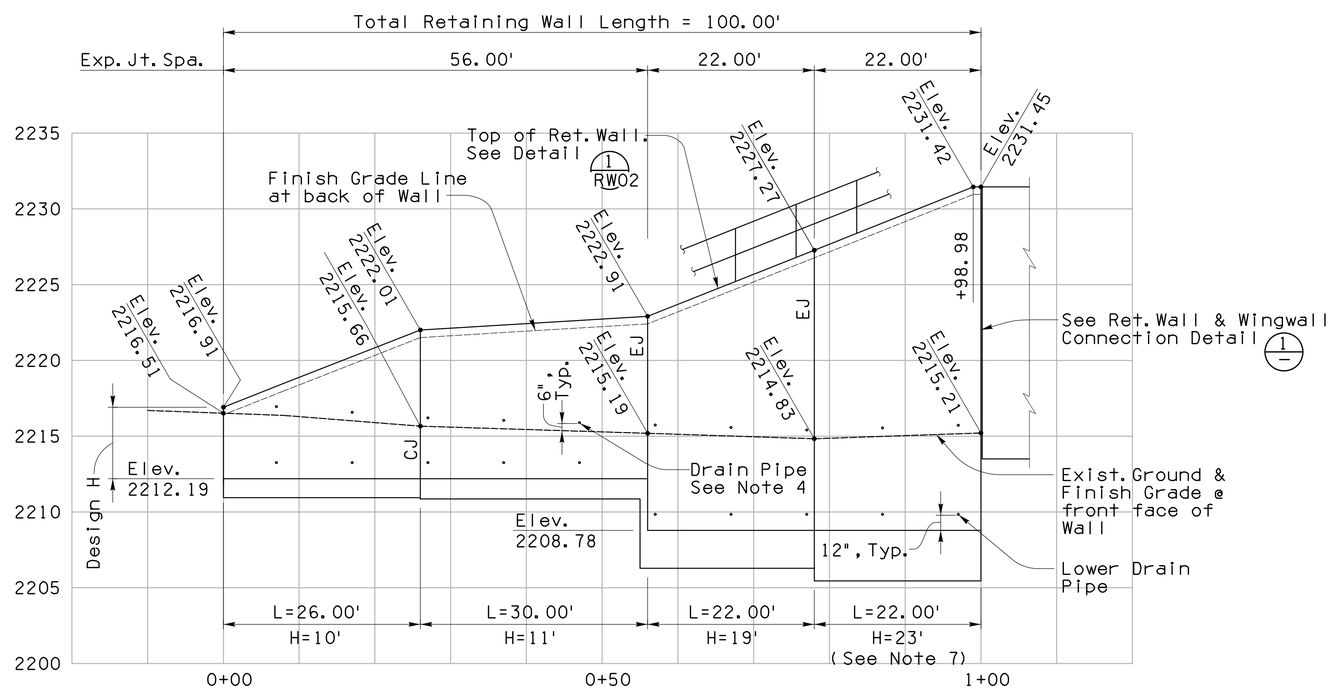

DEVELOPED ELEVATION - RETAINING WALL 2
Horiz. 1" = 10'
Vert. 1" = 5'

Notes:

1. Retaining Wall 2 shall conform to ADOT Std. Dwgs. SD 7.01 (1 to 5) Case III and shall be paid under Item No. 6010200.
2. The Stations and Offsets shown in the plan view indicate the face of the Retaining Wall farthest from Sunset Const. ℄.
3. Footing shall be continuous with no joints unless noted otherwise:

   CJ = Construction Joint
   EJ = Expansion Joint

4. Provide drain pipe at 10'-0" o.c. See SD-7.01.
5. Handrail and handrail connection to the Retaining Wall per Pima Association of Governments (PAG) Standard Detail No. 105 (Standard lower Rail Location).
6. Provide End Treatment A from PAG Std. Detail 105 for handrails.
7. For Retaining Wall with Design H=23', the contractor shall ensure intimate contact between the compacted soil in front of the toe slab with the toe slab before backfilling commences behind the wall stem. This intimate contact shall be maintained during and after construction for the design life of the structure.
8. No excavation shall be permitted in front of the wall within the limits of the "No-Dig Zone".

Priscilla S. Cornello, P.E., Director

Designed	JAM	11/15
Drawn	JHS, NAL	11/15
Checked	CGP	11/15
Proj. Engr.	JAM	11/15

No.	Revision Description	Engineer	Date

Structural Grace, Inc
1331 East Lowell Rd., Ste. 200, Tucson, AZ 85719 (520) 32041156

Call at least two full working days before you begin excavation.
ARIZONA 811
Access Blue Stake, Inc.
Dial 8-1-1 or 1-800-STAKE IT (782-5348)
In Maricopa County (602) 263-1100

Pima County Department of Transportation

RETAINING WALL 2 - PLAN & ELEVATION
SUNSET ROAD - SEGMENT 1
SILVERBELL RD. TO I-10

PROJECT NO. 4RTSUN

SUNSET ROAD - SILVERBELL ROAD TO I-10 - PROJECT NO. 4RTSUN

Scale: As Noted | Sheet RW03 of RW04 | Page 68 of 203

FILE NAME: W:\Jobs\2013\1326_Sunset\1326_Working\1326_Sunset_RW03_RW3.dgn DATE: 11/16/2015 TIME: 4:32:55 PM MLichtenstein

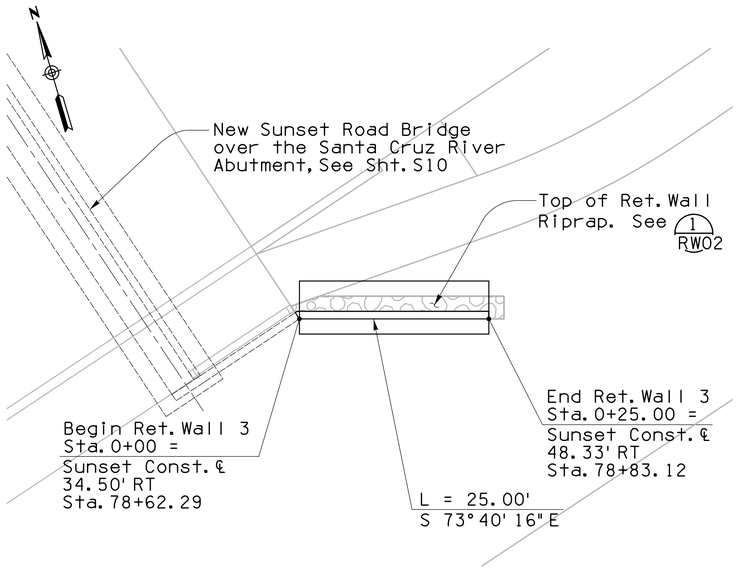

PLAN - RETAINING WALL 3
1" = 10'

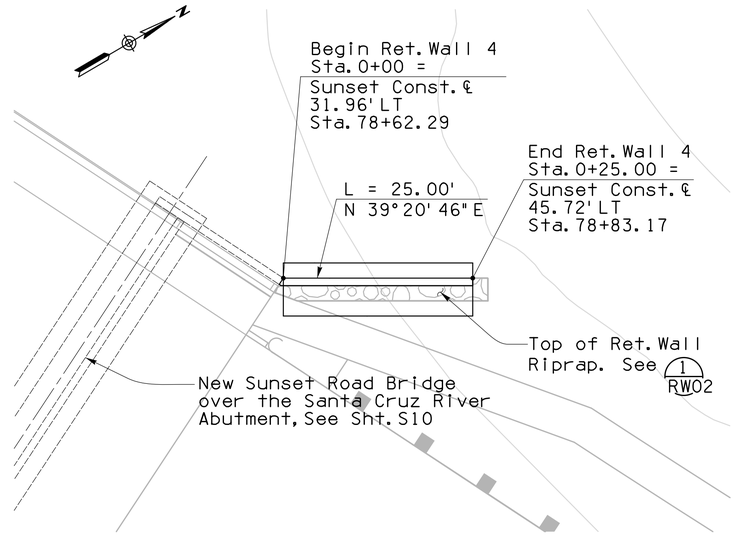

PLAN - RETAINING WALL 4
1" = 10'

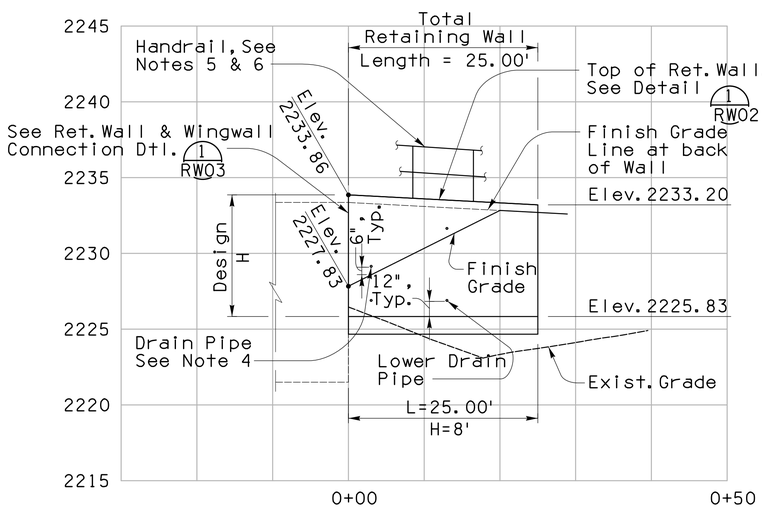

ELEVATION - RETAINING WALL 3
Horiz. 1" = 10'
Vert. 1" = 5'

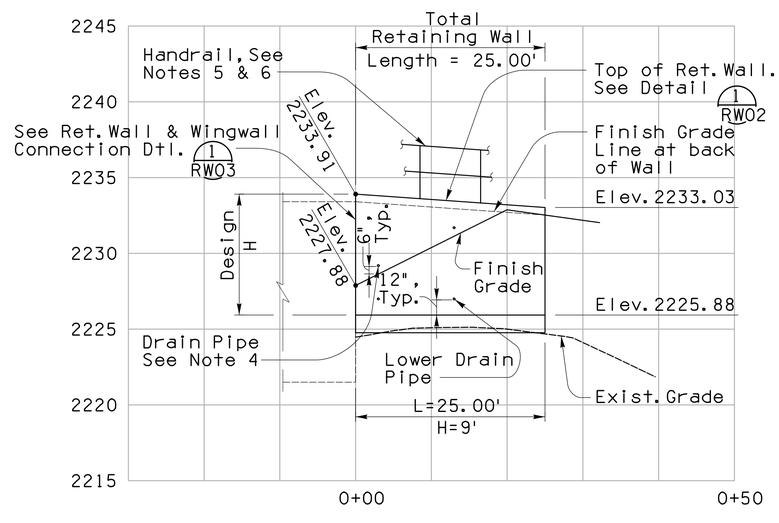

DEVELOPED ELEVATION - RETAINING WALL 4
Horiz. 1" = 10'
Vert. 1" = 5'

Notes:

1. Retaining Walls 3 & 4 shall conform to ADOT Std. Dwgs. SD 7.01 (1 to 5) Case II and shall be paid under Item No. 6010200.
2. The Stations and Offsets shown in the plan view indicate the face of the Retaining Wall farthest from Sunset Const. ℄.
3. Footing shall be continuous with no joints unless noted otherwise:

   CJ = Construction Joint
   EJ = Expansion Joint

4. Provide drain pipes at 10'-0" o.c. See SD-7.01.
5. Handrail and handrail connection to the Retaining Wall per Pima Association of Governments (PAG) Standard Detail No. 105 (Standard lower Rail Location).
6. Provide End Treatment A from PAG Std. Detail 105 for handrails.

Priscilla S. Cornello, P.E., Director

Designed	JAM	11/15
Drawn	JHS, NJL	11/15
Checked	CGP	11/15
Proj. Engr.	JAM	11/15

No.	Revision Description	Engineer	Date

Structural Grace, Inc
1431 E. Fort Lowell Rd., Ste. 200, Tucson, AZ 85719 (520) 320-0156

Call at least two full working days before you begin excavation.
ARIZONA 811
Arizona Blue Stake, Inc.
Dial 8-1-1 or 1-800-STAKE-IT (782-5348)
In Maricopa County: (602) 263-1100

Pima County Department of Transportation

RETAINING WALLS 3 & 4 -
PLAN AND ELEVATION
SUNSET ROAD - SEGMENT 1
SILVERBELL RD. TO I-10

PROJECT NO. 4RTSUN

SUNSET ROAD - SILVERBELL ROAD TO I-10 - PROJECT NO. 4RTSUN

Scale:	As Noted	Sheet RW04 of RW04	Page 69 of 203

FILE NAME: W:\Jobs\2013\1326_Sunset\1326_Working\1326_Sunset_RW04_RW4.dgn DATE: 11/16/2015 TIME: 4:32:57 PM MLichtenstein

GENERAL NOTES

Construction Specification - PAG Standard Specifications & Standard Details for Public Improvements (2014).

Design Specifications -
American Association of State Highway and Transportation Officials (AASHTO) LRFD Bridge Design Specifications, 6th Edition, 2011.

Dead Load - Dead Load includes allowance of 25 lbs per square foot for future wearing surface.

Loading Class - AASHTO HL-93: Design Truck plus Design Lane.
Design Tandem plus Design Lane.

The Bridge site is classified as Site Class B with Peak Ground acceleration (PGA) = 0.076
and Spectral Acceleration Coefficients:
at period 0.2 sec (S_S) = 0.174, and at
Period 1 sec (S_1) = 0.049
The Bridge is assigned to Seismic Zone 1

Inventory and operating ratings for HL-93 are in accordance with AASHTO Manual for Condition Evaluation of Bridges, 1st Edition 2008 in accordance with the Load and Resistance Factor method.
Inventory Load Rating Factor (RF) 1.35
Operating Load Rating Factor (RF) 2.13

All concrete shall be Class "S" unless noted otherwise, except deck concrete shall be Class "X".

Prestressing steel strands shall conform to ASTM A416 (AASHTO M203), grade 270, low relaxation strands.

Reinforcing steel shall conform to ASTM Specification A615/A615M-96a. All reinforcing shall be furnished as Grade 60.

All bends and hooks for reinforcing steel shall meet the requirements of AASHTO LRFD Section 5.10.

All reinforcing shall have 2 inches clear cover unless noted otherwise.

All mechanical splices shall conform to the requirements for mechanical connections in section 605-3.02 of the standard specifications.

Structural steel shall conform to ASTM Specification A36 unless noted otherwise. Structural rectangular tubing shall conform to ASTM A-500, Grade B. All welding shall conform to the requirements of the American Welding Society (AWS), Bridge Welding Code ANSI/AASHTO/AWS D1.5-2006 or latest edition.

Concrete Strengths:
Precast-Prestressed Girders ..... f'c = See Girder Sheets
Deck, Diaphragms ..... f'c = 4,500 psi
Pier Cap & Columns ..... f'c = 4,500 psi
Abutments & Wingwalls ..... f'c = 3,500 psi
Drilled Shafts ..... f'c = 4,500 psi
Barrier ..... f'c = 4,000 psi
All other Class "S" concrete ..... f'c = 3,000 psi

Stresses:
Deck Reinforcement ..... fs = 24,000 psi

Dimensions shall not be scaled from drawings.

All dimensions are shown in feet-inches and all elevations are shown in feet unless noted otherwise.

Profile grades shown are finished elevations, unless noted otherwise.

Barriers shall not be slip formed.

Contractor shall coordinate all existing conditions during construction of project. Utility information shown on the plans may not be complete or accurately depict the location of the facilities shown. The Contractor shall coordinate the location of all existing, new, relocated and abandoned utilities with the project plans and notify respective owners before commencing the work of excavation, including any drilling or piling required for temporary shoring. Conflicts shall be brought to the attention of the Engineer and resolved prior to proceeding with the work. See roadway and utility drawings for additional information.

High voltage overhead powerlines cross the proposed roadway and bridge alignment. Prior to commencing work, the Contractor shall contact Michael Baird (602) 605-4428 at the Western Area Power Administration and David Smith (520) 396-2728 or (520) 539-7227 at Tucson Electric Power. Refer to the Special Provision when working in the vicinity of these facilities.

Chamfer all exposed corners 3/4" unless noted otherwise.

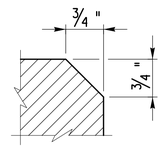

LEGEND:

Detail Marker

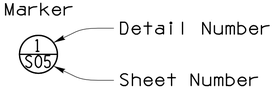

Section Marker

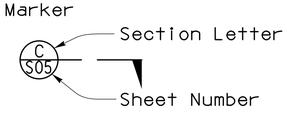

Note:

A line (-) in place of the Sheet number indicates that the SECTION or DETAIL is located on the same Sheet that the SECTION or DETAIL is cut.

INDEX OF SHEETS

Title	Sheet No.
General Notes & Index	S01
General Plan & Elevation - 1 of 2	S02
General Plan & Elevation - 2 of 2	S03
Typical Section & Profile Grade	S04
Quantities	S05
Foundation Plan	S06
Drilled Shaft Details - 1 of 2	S07
Drilled Shaft Details - 2 of 2	S08
Abutment 1 Plan & Elevation	S09
Abutment 2 Plan & Elevation	S10
Abutment Sections - 1 of 3	S11
Abutment Sections - 2 of 3	S12
Abutment Sections - 3 of 3	S13
Wingwall Elevation & Sections - 1 of 2	S14
Wingwall Elevation & Sections - 2 of 2	S15
Piers 1, 3 & 5 Typ. Plan & Elevation	S16
Piers 2 & 4 Typ. Plan & Elevation	S17
Pier Details - 1 of 2	S18
Pier Details - 2 of 2	S19
Girder Details - 1 of 2	S20
Girder Details - 2 of 2	S21
Deck Framing Plan	S22
Typ. Deck Sections	S23
Typ. Deck Details	S24
Abutment Diaphragm	S25
Abutment & Inter. Diaphragm Sections	S26
Piers 1 & 5 Diaphragm	S27
Piers 2 & 4 Diaphragm	S28
Pier 3 Diaphragm	S29
Pier Diaphragm Sections - 1 of 2	S30
Pier Diaphragm Sections - 2 of 2	S31
Miscellaneous Details - 1 of 5	S32
Miscellaneous Details - 2 of 5	S33
Miscellaneous Details - 3 of 5	S34
Miscellaneous Details - 4 of 5	S35
Miscellaneous Details - 5 of 5	S36
Barrier & Rail Details	S37
Camber Diagram & Screed Elevation Notes	S38
Screed Elevations - 1 of 3	S39
Screed Elevations - 2 of 3	S40
Screed Elevations - 3 of 3	S41
Bridge Architecture - 1 of 2	S42
Bridge Architecture - 2 of 2	S43
Foundation Data	SF-01 - SF-08

ADOT STRUCTURE DETAIL DRAWINGS:

F-shape Bridge Concrete Barrier and Transition (34")	SD 1.01
Thrie Beam Guard Rail Transition System	SD 1.03
Combination Pedestrian-Traffic Bridge Railing	SD 1.04
Barrier Junction Box	SD 1.11
Approach Slab Details	SD 2.01
Deck Joint Assembly Compression Seal	SD 3.01
Structural Excavation	SD 5.01
Structure Backfill	SD 5.02
Retaining Wall (Reinforced Concrete Cantilever) (5 Sheets)	SD 7.01

Priscilla S. Cornelio, P.E., Director

Designed	JAM	11/15
Drawn	JHS, NJL	11/15
Checked	CGP	11/15
Proj. Engr.	JAM	11/15

No.	Revision Description	Engineer	Date

Structural Grace, Inc
13131 E. Fort Lowell Rd., Ste. 200, Tucson, AZ 85719 (520) 320-0156

Call at least two full working days before you begin excavation. ARIZONA BLUE STAKE, INC. Dial 8-1-1 or 1-800-STAKE-IT (782-5348) In Maricopa County: (602) 263-1100

Pima County Department of Transportation

GENERAL NOTES & INDEX
SUNSET ROAD - SEGMENT 1
SILVERBELL RD. TO I-10

PROJECT NO. 4RTSUN

SUNSET ROAD - SILVERBELL ROAD TO I-10 - PROJECT NO. 4RTSUN

Scale:	As Noted	Sheet S01 of S43	Page 70 of 203

HYDRAULIC DATA	
Interim (Silverbell at existing grade)	Ultimate (Silverbell at future proposed grade)
Q_{100} = 70,000 Hw_{100} = 2,222.58 Q_{500} = 93,000 cfs Hw_{500} = 2,224.49	Q_{100} = 70,000 Hw_{100} = 2,222.68 Q_{500} = 93,000 cfs Hw_{500} = 2,224.03

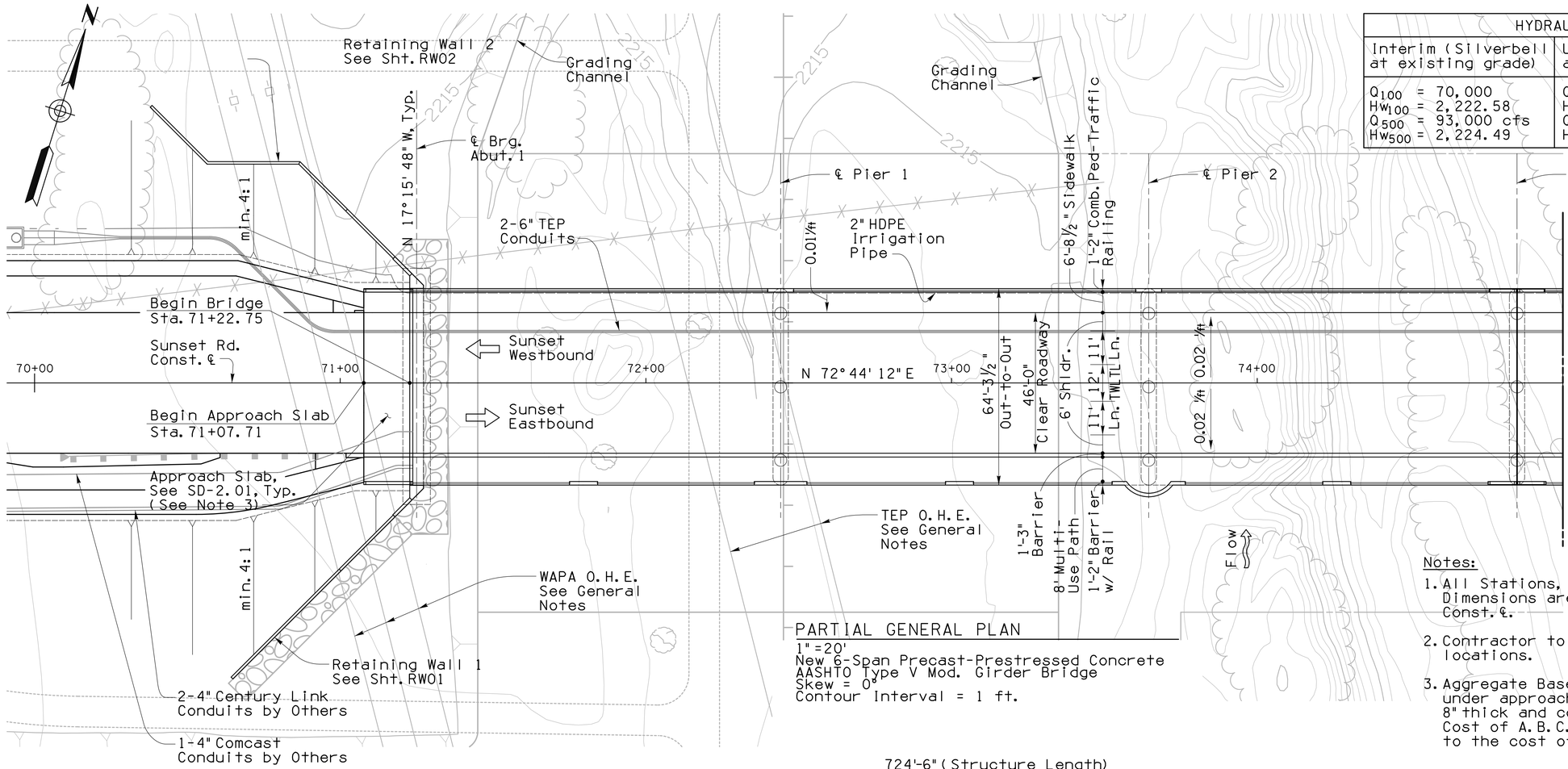

PARTIAL GENERAL PLAN
1" = 20'
New 6-Span Precast-Prestressed Concrete AASHTO Type V Mod. Girder Bridge
Skew = 0°
Contour Interval = 1 ft.

Notes:

1. All Stations, Elevations & Dimensions are at Sunset Road Const. ℄.
2. Contractor to verify utility line locations.
3. Aggregate Base Course (A.B.C.) under approach slabs shall be 8" thick and compacted to 100%. Cost of A.B.C. shall be incidental to the cost of the approach slab.

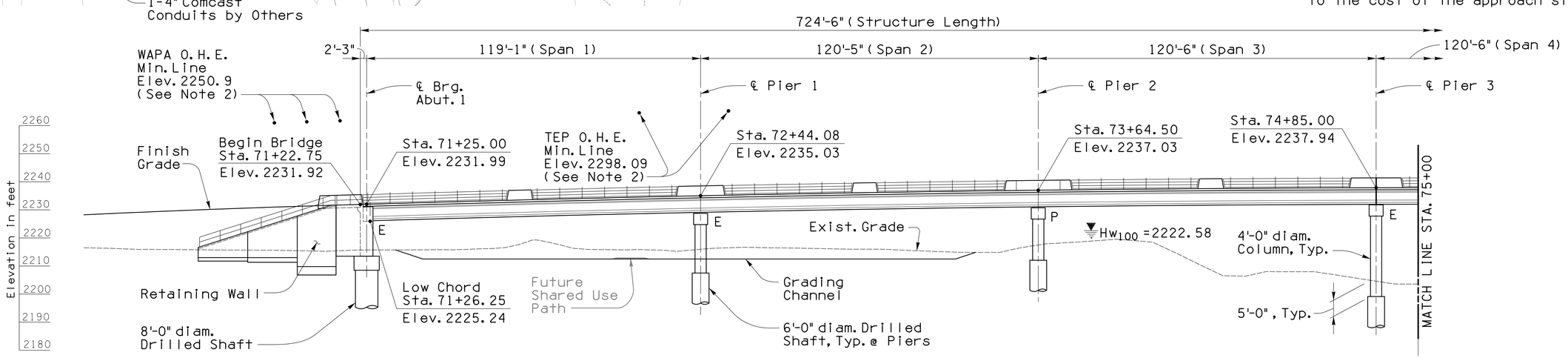

PARTIAL ELEVATION
1" = 20'

Pima County Department of Transportation

Priscilla S. Cornelio, P.E., Director

No.	Revision Description	Engineer	Date

		Date
Designed	JAM	11/15
Drawn	JHS, NIL	11/15
Checked	CGP	11/15
Proj. Engr.	JAM	11/15

Structural Grace, Inc
1331 E. Fort Lowell Rd., Ste. 200, Tucson, AZ 85719 (520) 320-0156

Call at least two full working days before you begin excavation. ARIZONA BLUE STAKE, INC. Dial 8-1-1 or 1-800-STAKE IT (782-5348) In Maricopa County: (602) 263-1100

GENERAL PLAN & ELEVATION - 1 OF 2
SUNSET ROAD - SEGMENT 1
SILVERBELL RD. TO I-10

PROJECT NO. 4RTSUN

SUNSET ROAD - SILVERBELL ROAD TO I-10 - PROJECT NO. 4RTSUN

Scale:	As Noted	Sheet S02 of S43	Page 71 of 203

FILE NAME: W:\Jobs\2013\1326_Sunset\1326_Working\1326_Sunset_S02_GP1.dgn DATE: 11/16/2015 TIME: 4:33:01 PM MLichtenstein

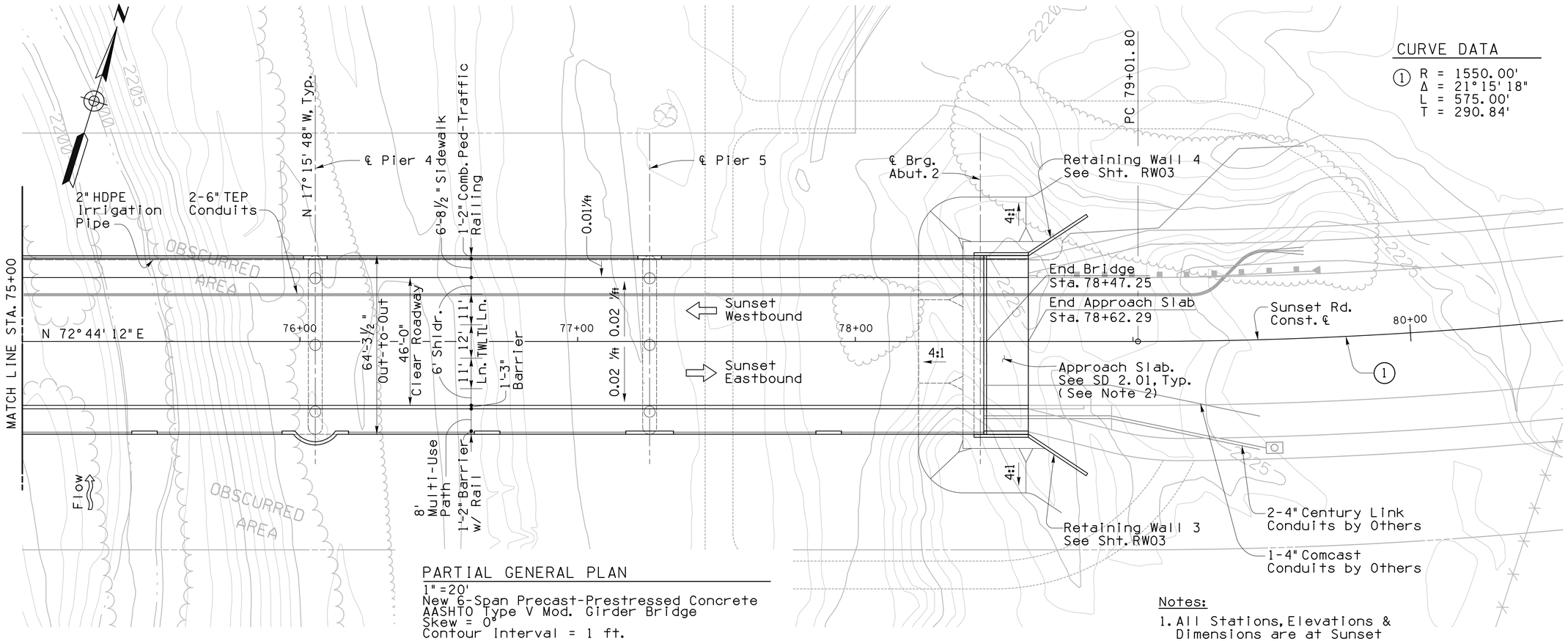

CURVE DATA

① R = 1550.00'
Δ = 21° 15' 18"
L = 575.00'
T = 290.84'

PARTIAL GENERAL PLAN

1" = 20'
New 6-Span Precast-Prestressed Concrete AASHTO Type V Mod. Girder Bridge
Skew = 0°
Contour Interval = 1 ft.

Notes:

1. All Stations, Elevations & Dimensions are at Sunset Road Const. ℄.
2. Aggregate Base Course (A.B.C.) under approach slabs shall be 8" thick and compacted to 100%. Cost of A.B.C. shall be incidental to the cost of the approach slab.

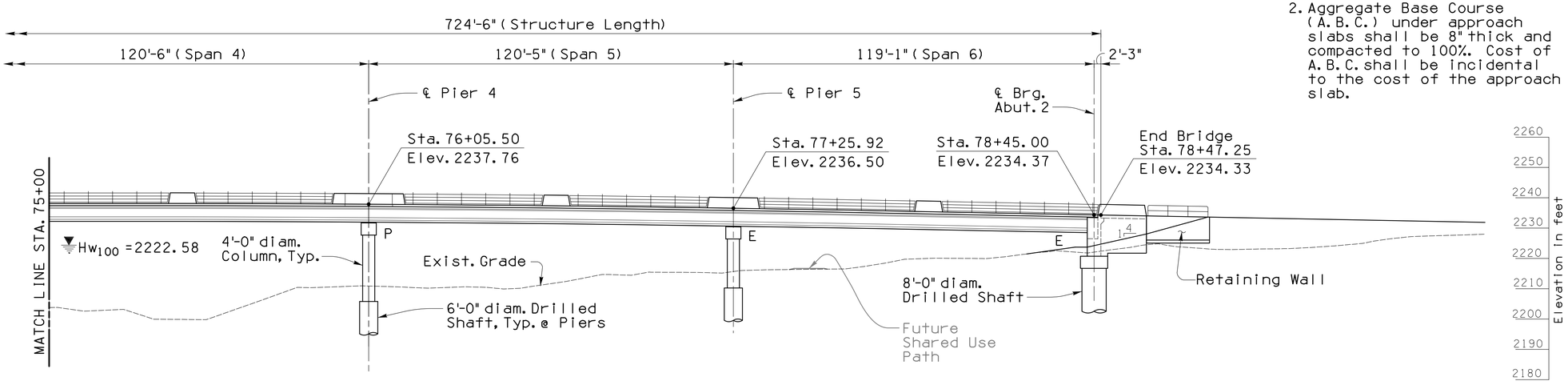

PARTIAL ELEVATION

1" = 20'

Pima County Department of Transportation

Priscilla S. Cornelio, P.E., Director

Designed	JAM	11/15
Drawn	JHS, NJL	11/15
Checked	CGP	11/15
Proj. Engr.	JAM	11/15

No.	Revision Description	Engineer	Date

Structural Grace, Inc
1434 E. Fort Lowell Rd., Ste. 200, Tucson, AZ 85719 (520) 320-0156

Call at least two full working days before you begin excavation. ARIZONA811 Arizona Blue Stake, Inc. Dial 8-1-1 or 1-800-STAKE-IT (782-5348) In Maricopa County: (602) 263-1100

GENERAL PLAN & ELEVATION - 2 OF 2
SUNSET ROAD - SEGMENT 1
SILVERBELL RD. TO I-10

PROJECT NO. 4RTSUN

SUNSET ROAD - SILVERBELL ROAD TO I-10 - PROJECT NO. 4RTSUN

Scale:	As Noted	Sheet S03 of S43	Page 72 of 203

FILE NAME: W:\Jobs\2013\1326_Sunset\1326_Working\1326_Sunset_S03_GP2.dgn DATE: 11/16/2015 TIME: 4:33:02 PM MLichtenstein

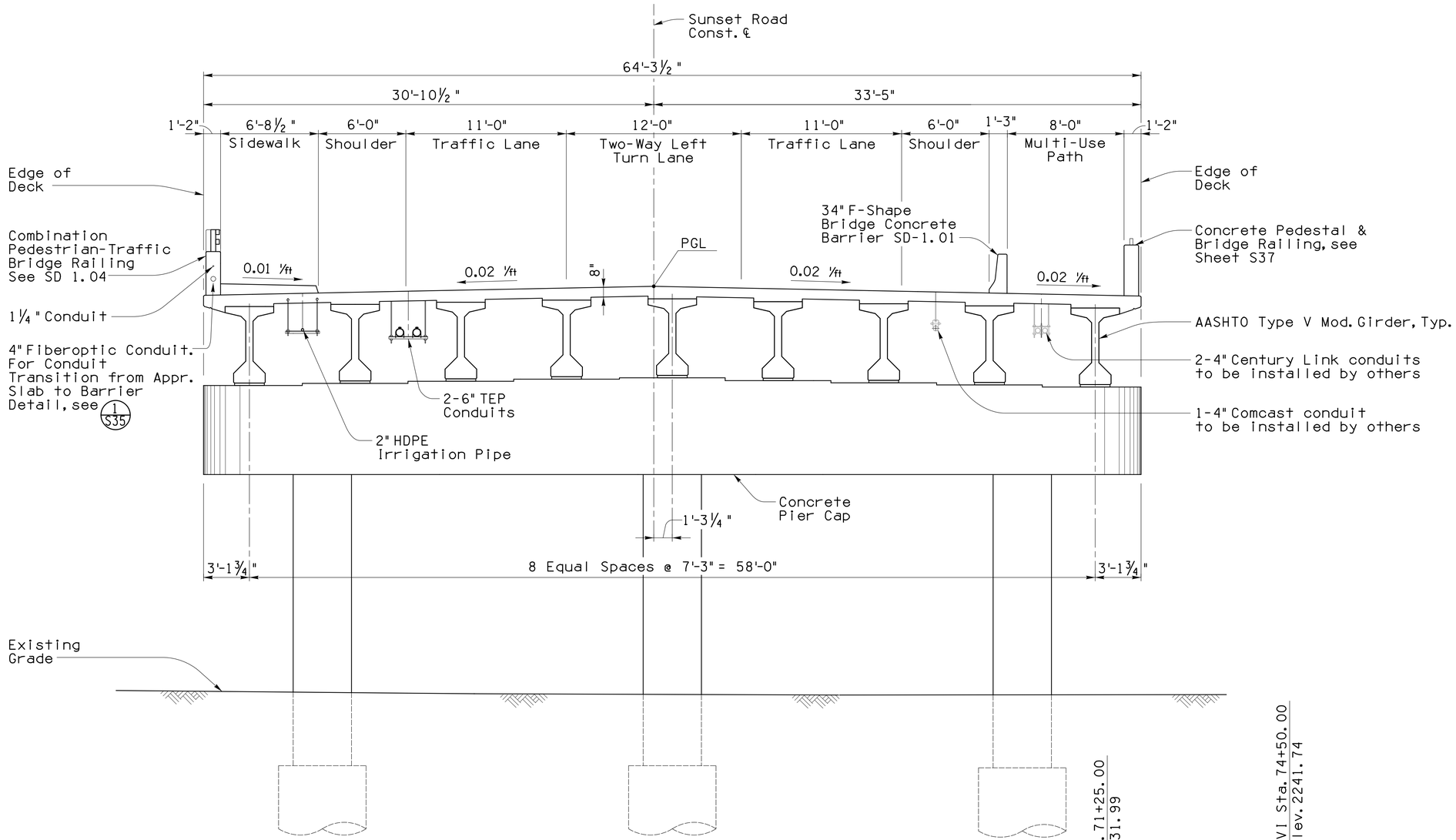

TYPICAL SECTION
¼" = 1'-0"

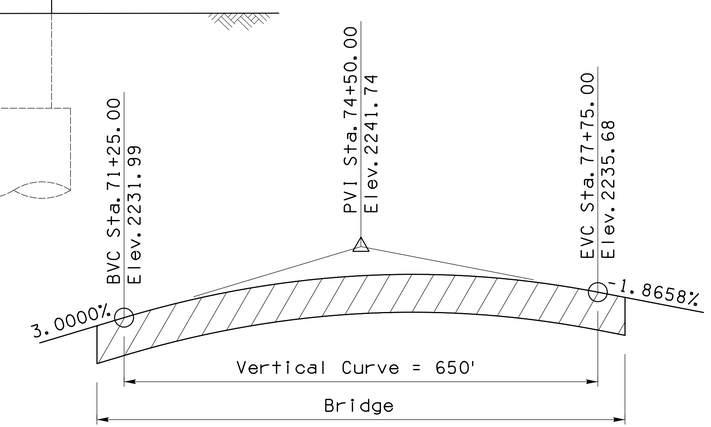

PROFILE GRADE
No Scale

Priscilla S. Cornello, P.E., Director

Designed	JAM	11/15
Drawn	JHS, NJL	11/15
Checked	CGP	11/15
Proj. Engr.	JAM	11/15

No.	Revision Description	Engineer	Date

Structural Grace, Inc
11311 Fort Lowell Rd., Ste. 200, Tucson, AZ 85719 (520) 320-0156

Call at least two full working days before you begin excavation.
ARIZONA 811
Dial 8-1-1 or 1-800-STAKE IT (782-5348)
In Maricopa County (602) 263-1100
Access Site Stake, Inc.

Pima County Department of Transportation

TYPICAL SECTION & PROFILE GRADE
SUNSET ROAD - SEGMENT 1
SILVERBELL RD. TO I-10

PROJECT NO. 4RTSUN

SUNSET ROAD - SILVERBELL ROAD TO I-10 - PROJECT NO. 4RTSUN

Scale:	As Noted	Sheet S04 of S43	Page 73 of 203

FILE NAME: W:\Jobs\2013\1326_Sunset\1326_Working\1326_Sunset_S04_XS1.dgn DATE: 11/16/2015 TIME: 4:33:03 PM MLichtenstein

APPROXIMATE QUANTITIES

ITEM#	ITEM DESCRIPTION	UNIT	ABUT. 1	ABUT. 2	Pier 1	Pier 2	Pier 3	Pier 4	Pier 5	SUPERSTRUCTURE	TOTALS	AS-BUILT
6010003	Structural Concrete (Class S)(f'c = 3,500 psi)	CY	302	205							507	
6010005	Structural Concrete (Class S)(f'c = 4,500 psi)	CY			101	104	117	108	99		529	
6010016	Structural Concrete (Class X)(f'c = 4,500 psi)	CY								1,702	1,702	
6010660	Concrete Bridge Parapet	LF								195	195	
6011132	Comb. Pedestrian Traffic Bridge Railing (SD 1.04)	LF								755	755	
6011140	F-Shape Concrete Barrier and Transition (34")	LF								755	755	
6011349	Deck Joint Assembly (5" X 5" Compression Seals)	LF	64	64			64			192	192	
6011371	Approach Slab (SD 2.01)	SF								1,929	1,929	
6014907	Precast, Prestressed Concrete Bridge Member (Type V)(Mod.)	LF								6,430	6,430	
6040501	Bridge Railing	LF								561	561	
6050002	Reinforcing Steel	LBS	31,770	20,510	17,290	18,650	20,860	19,310	17,900	385,030	531,320	
6090006	Drilled Shaft (6'-0" diameter)	LF			422	422	399	415	430		2,088	
6090008	Drilled Shaft (8'-0" diameter)	LF	351	414							765	
9230060	Utility Hanger Insert	EA	0	0	0	0	0	0	0	144	144	
9230080	Utility Hanger	EA	0	0	0	0	0	0	0	48	48	
9230040	Utility Block Out	EA	4+++	4+++	4+	4+	8++	4	4	60	92	
9230232	RGS Conduit 6"(TEP)*	LF								1,449	1,449	
9330008	Handrail (Std. Dtl. 105)(Std. Lower Rail Location)	LF	27								27	

Notes:

1. The cost of structural excavation & structure backfill is incidental to other items of work.
2. "*" The cost of expansion sleeves and misc. fittings shall be included in the price per linear feet of conduit.

PER UTILITY QUANTITIES

ITEM#	ITEM DESCRIPTION	UNIT	ABUT. 1	ABUT. 2	Pier 1	Pier 2	Pier 3	Pier 4	Pier 5	SUPERSTRUCTURE	TOTALS
TEP											
9230060	Utility Hanger Insert++++	EA								48	48
9230080	Utility Hanger	EA								48	48
9230040	Utility Block Out	EA	2+++	2+++	2+	2+	4++	2+	2+	24	40
Comcast											
9230060	Utility Hanger Insert++++	EA								48	48
9230040	Utility Block Out	EA	1+++	1+++	1+	1+	2++	1+	1+	12	20
Century Link											
9230060	Utility Hanger Insert++++	EA								48	48
9230040	Utility Block Out	EA	1+++	1+++	1+	1+	2++	1+	1+	12	20
Irrigation											
9230040	Utility Block Out	EA	1+++	1+++	1+	1+	2++	1+	1+	12	20

+Expansion joint pier - utility block outs through two diaphragms on each side of joint.

++Pinned/Expansion piers - utility block out through single diaphragm poured monolithically between spans.

+++Includes utility block outs through abutment back wall and pier end diaphragm.

++++See Sheet S25 for Utility Hanger Spacing. Applies to all spans.

Priscilla S. Cornello, P.E., Director

Designed	JAM	Date 11/15
Drawn	JHS, MJL	11/15
Checked	CGP	11/15
Proj. Engr.	JAM	11/15

No.	Revision Description	Engineer	Date

Structural Grace, Inc
1320 E. Fort Lowell Rd., Ste. 200, Tucson, AZ 85719 (520) 320-0156

Call at least two full working days before you begin excavation
ARIZONA 811
Arizona Blue Stake, Inc.
Dial 8-1-1 or 1-800-STAKE IT (782-5348)
In Maricopa County: (602) 263-1100

Pima County Department of Transportation

QUANTITIES
SUNSET ROAD - SEGMENT 1
SILVERBELL RD. TO I-10

PROJECT NO. 4RTSUN

SUNSET ROAD - SILVERBELL ROAD TO I-10 - PROJECT NO. 4RTSUN

Scale:	As Noted	Sheet S05 of S43	Page 74 of 203

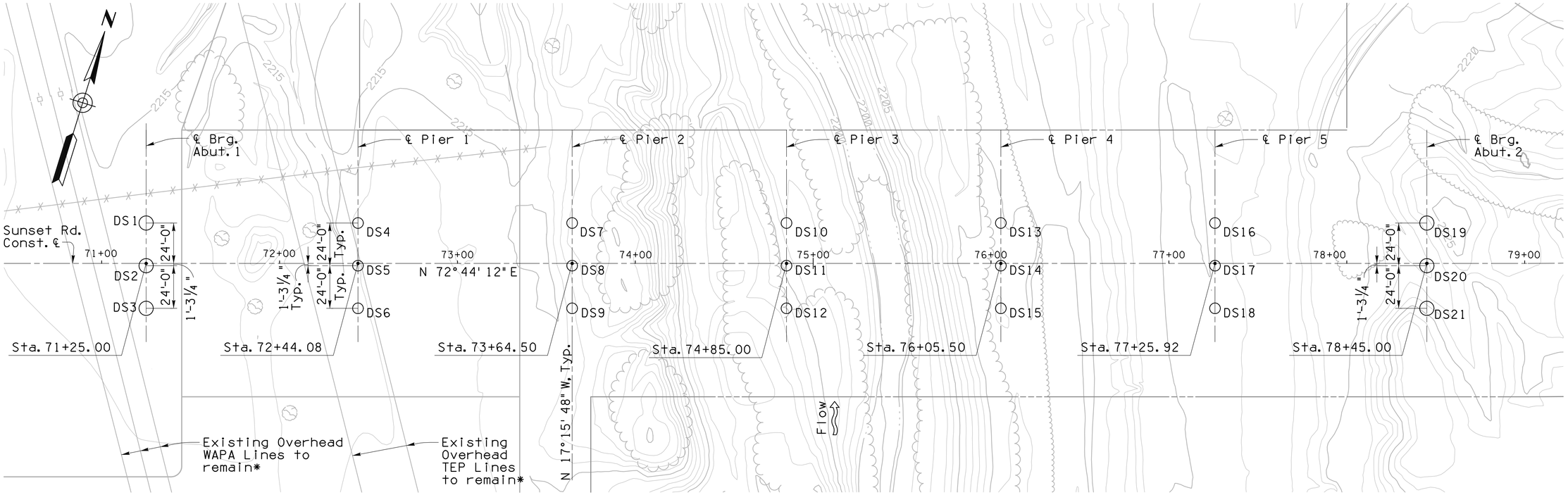

FOUNDATION PLAN
1" =30'

*See Special Provisions when working in vicinity of overhead lines

THE LOCATION OF ALL UTILITIES IS APPROXIMATE ONLY. LOCATIONS SHOWN REFLECT THE FINDINGS OF THE LATEST AVAILABLE MAPPING.

DRILLED SHAFT SCHEDULE

Mark	Drilled Shaft Diameter (in.)	Drilled Shaft Length (ft.)	Top Elev. (ft.)	Tip Elev. (ft.)	Factored Vertical Force (kips)	
					Load	Resistance
DS1	8'-0"	131.75	2208.75	2092.00	3100	3250
DS2	8'-0"	131.75	2208.75	2092.00	3110	3250
DS3	8'-0"	131.75	2208.75	2092.00	3070	3250
DS4	6'-0"	140.50	2207.50	2067.00	2140	2950
DS5	6'-0"	140.50	2207.50	2067.00	2350	2950
DS6	6'-0"	140.50	2207.50	2067.00	1860	2950
DS7	6'-0"	140.50	2207.50	2067.00	2140	2950
DS8	6'-0"	140.50	2207.50	2067.00	2350	2950
DS9	6'-0"	140.50	2207.50	2067.00	1860	2950
DS10	6'-0"	132.75	2199.75	2067.00	2140	2950
DS11	6'-0"	132.75	2199.75	2067.00	2350	2950
DS12	6'-0"	132.75	2199.75	2067.00	1860	2950

DRILLED SHAFT SCHEDULE

Mark	Drilled Shaft Diameter (in.)	Drilled Shaft Length (ft.)	Top Elev. (ft.)	Tip Elev. (ft.)	Factored Vertical Force (kips)	
					Load	Resistance
DS13	6'-0"	138.25	2205.25	2067.00	2140	2950
DS14	6'-0"	138.25	2205.25	2067.00	2350	2950
DS15	6'-0"	138.25	2205.25	2067.00	1860	2950
DS16	6'-0"	143.25	2210.25	2067.00	2140	2950
DS17	6'-0"	143.25	2210.25	2067.00	2350	2950
DS18	6'-0"	143.25	2210.25	2067.00	1860	2950
DS19	8'-0"	137.75	2216.75	2079.00	3580	3800
DS20	8'-0"	137.75	2216.75	2079.00	3780	3800
DS21	8'-0"	137.75	2216.75	2079.00	3580	3800

TEMPORARY SHORING NOTES

The Contractor shall be responsible for providing temporary shoring as required, to protect utilities, for protection of workers, or as otherwise needed to accomplish the work. Shoring shall conform to the design and construction specifications noted in the General Notes.

Contractor to submit a plan outlining construction procedures, and shoring requirements and design to the Engineer for review and approval prior to proceeding with the work. See Standard Specifications and Special Provisions for additional information.

Priscilla S. Cornello, P.E., Director

Designed	JAM	11/15
Drawn	JHS, MJL	11/15
Checked	CGP	11/15
Proj. Engr.	JAM	11/15

No.	Revision Description	Engineer	Date

Structural Grace, Inc
1101 E. Fort Lowell Rd., Ste. 200, Tucson, AZ 85719 (520) 320-0156

Call at least two full working days before you begin excavation.
ARIZONA811
Arizona Blue Stake, Inc.
Dial 8-1-1 or 1-800-STAKE-IT (782-5348)
In Maricopa County: (602) 263-1100

Pima County Department of Transportation

FOUNDATION PLAN
SUNSET ROAD - SEGMENT 1
SILVERBELL RD. TO I-10

PROJECT NO. 4RTSUN

SUNSET ROAD - SILVERBELL ROAD TO I-10 - PROJECT NO. 4RTSUN

Scale: As Noted | Sheet S06 of S43 | Page 75 of 203

FILE NAME: W:\Jobs\2013\1326_Sunset\1326_Working\1326_Sunset_S06_FL1.dgn DATE: 11/16/2015 TIME: 4:33:05 PM MLichtenstein

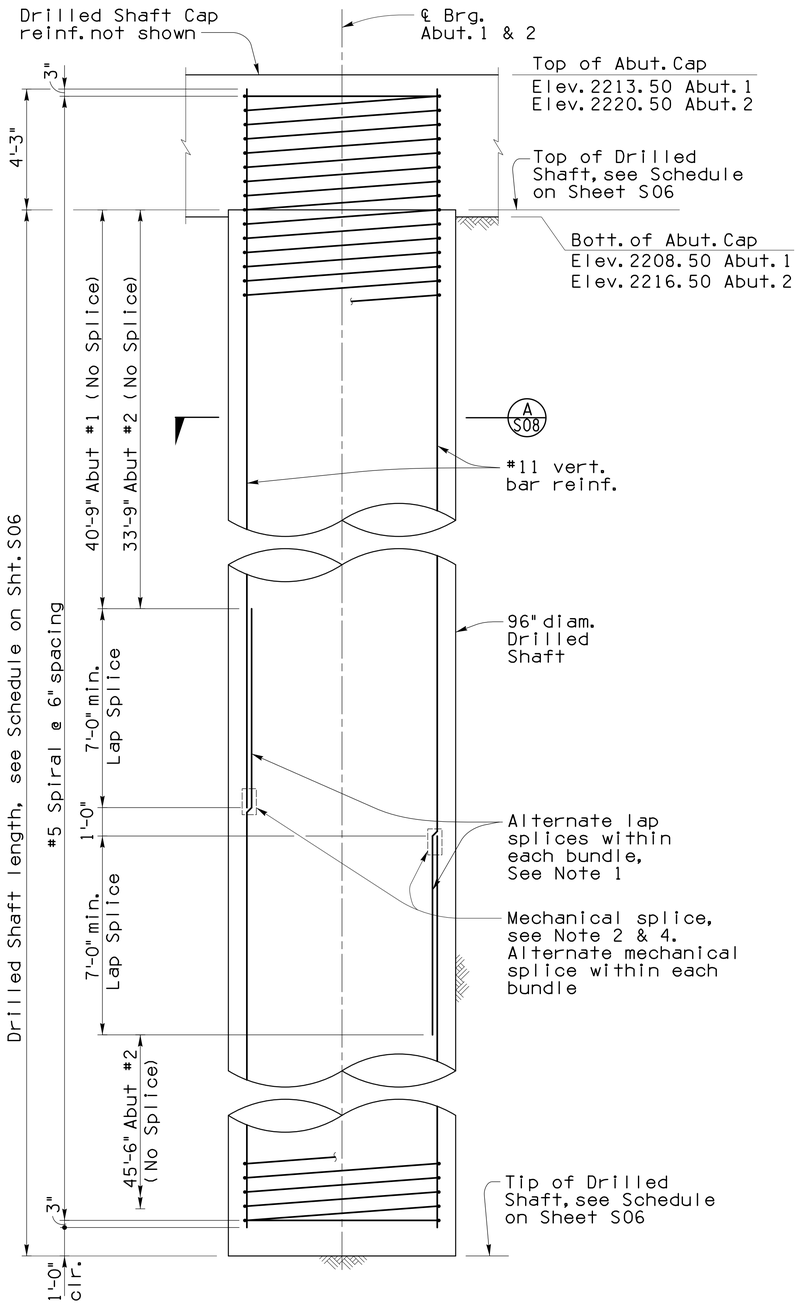

DRILLED SHAFT AT ABUT. 1 & 2

3/8" = 1'-0"

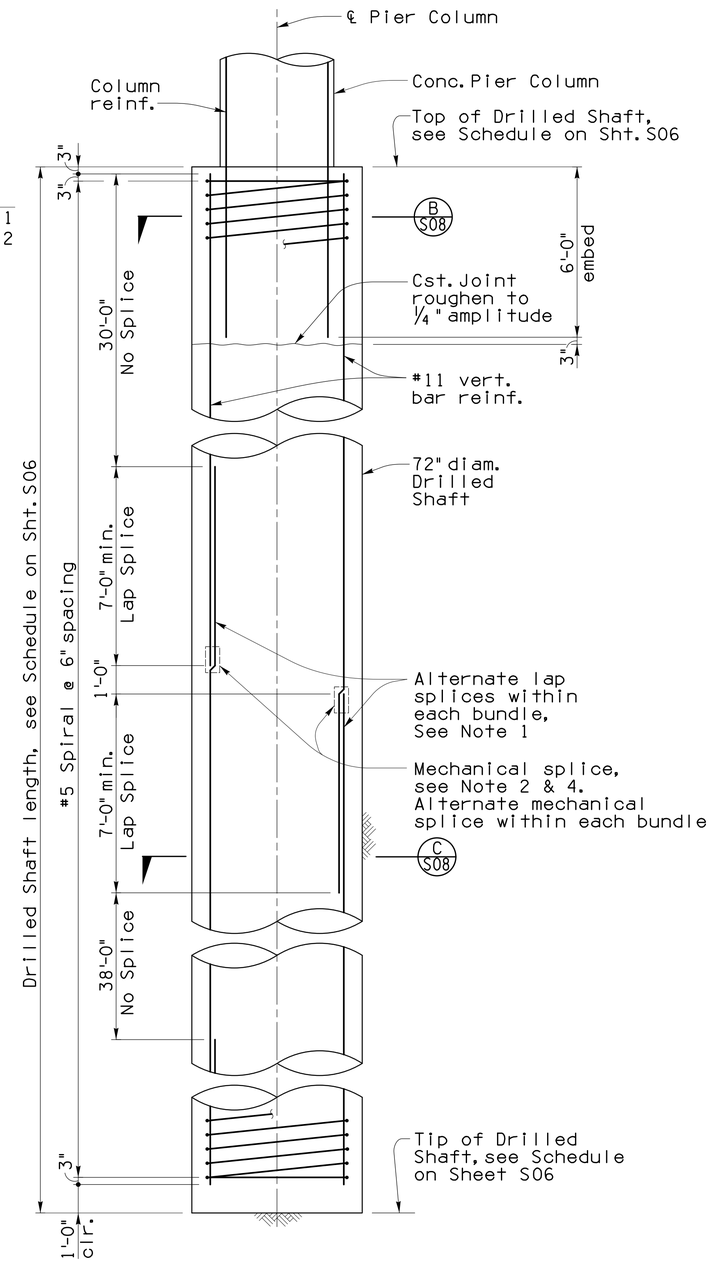

DRILLED SHAFT AT PIERS 1 THRU 5

3/8" = 1'-0"

Notes:

1. Stagger lap splices such that no more than one half of vertical bars are lap spliced at any location. Stagger splices 1'-0" min., lap splice length = 7'-0" min. Modifications to lap splice shall be approved by the Engineer.
2. All mechanical splices of reinforcing steel shall develop 125% of the yield strength of reinforcing bar and shall conform to the requirements for mechanical connections in Section 606-3.02.
3. For additional drilled shaft notes see Sheet S08.
4. Where the steel reinforcing cage must be installed in sections due to clearance requirements associated with the proximity of the overhead power line mechanical couplers shall be utilized. Mechanical splice cost shall be incidental to the linear cost of the drilled shaft.

Priscilla S. Cornello, P.E., Director

Designed	JAM	11/15
Drawn	JHS, NJL	11/15
Checked	CGP	11/15
Proj. Engr.	JAM	11/15

No.	Revision Description	Engineer	Date

Structural Grace, Inc
1101 E. Fort Lowell Rd., Ste. 200, Tucson, AZ 85719 (520) 320-0156

Call at least two full working days before you begin excavation.
ARIZONA811
Arizona Blue Stake, Inc.
Dial 8-1-1 or 1-800-STAKE IT (782-5348)
In Maricopa County: (602) 263-1100

Pima County Department of Transportation

DRILLED SHAFT SECTIONS
SUNSET ROAD - SEGMENT 1
SILVERBELL RD. TO I-10

PROJECT NO. 4RTSUN

SUNSET ROAD - SILVERBELL ROAD TO I-10 - PROJECT NO. 4RTSUN

Scale:	As Noted	Sheet S07 of S43	Page 76 of 203

FILE NAME: W:\Jobs\2013\1326_Sunset\1326_Working\1326_Sunset_S07_DS1.dgn DATE: 11/16/2015 TIME: 4:33:05 PM MLichtenstein

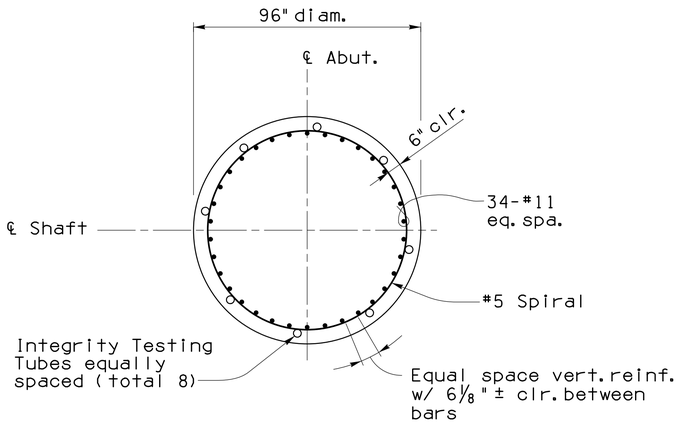

SECTION A S07
⅜" = 1'-0"

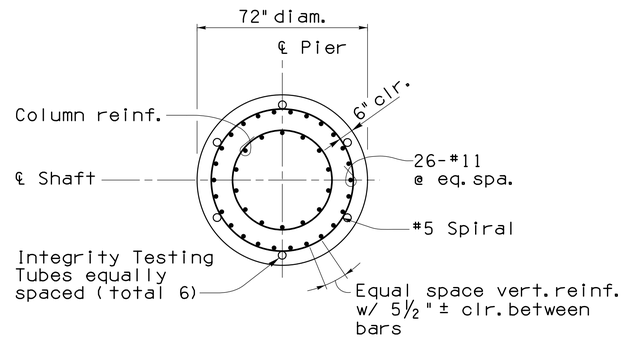

SECTION B S07
⅜" = 1'-0"

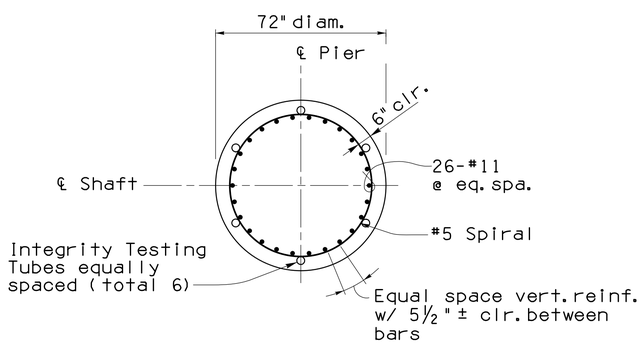

SECTION C S07
⅜" = 1'-0"

DRILLED SHAFT NOTES

1. The Geotechnical and Foundation Designs are based on Final Geotechnical Report, prepared by NCS Consultant, LLC.
2. The Installation of the Drilled Shaft Foundations shall be in accordance with Section 609 of the Standard Specifications.
3. The reinforcing cage shall be placed in the drilled shaft within one hour after the drilled shaft bottom has been cleaned. The drilled shaft bottom shall be inspected immediately prior to lifting the cage and re-cleaned if deemed necessary by the Engineer.
4. Placement of drilled shaft concrete shall commence within 1 hour after placement of the reinforcing cage.
5. There shall be at least 48 hours between concrete placement of adjacent drilled shafts.
6. Construction joints not shown on the project plans will require the approval of the Engineer prior to construction.
7. A temporary surface casing is recommended to aid in the alignment of drilled shafts, to ensure personal safety and to prevent sloughing or raveling. A minimum 15-foot-long temporary surface casing extending at least 2 feet above the ground surface is recommended. The diameter of the surface casing shall not be more than 12 inches larger than the nominal diameter of the shaft.
8. For integrity testing, inspection tube quantity, size, type, and detail shall be per Section 609 of the Standard Specifications.
9. Tubes for integrity testing of drilled shafts shall be placed as shown from 4'-0" above shaft to within 1'-0" of bottom shaft. Tubes to have threaded cap at top end and bottom end and be securely attached to alternate ties (do not attach to vertical reinforcing). See Standard Specifications.
10. The grouting of the test tubes, after integrity testing, shall be done only after receiving Engineer approval.
11. Provide 1.5 extra turns of spiral bar at each end of the spiral unit.
12. Splice vertical reinforcement as indicated on Sheet S07. The Contractor shall contact the Engineer for approval of additional splice location.
13. For additional construction considerations for drilled shaft, see Final Geotechnical Report.

Pima County Department of Transportation
Priscilla S. Cornelio, P.E., Director

Designed	JAM	Date 11/15
Drawn	JHS, NJL	11/15
Checked	CGP	11/15
Proj. Engr.	JAM	11/15

No.	Revision Description	Engineer	Date

Structural Grace, Inc
1321 E. Fort Lowell Rd., Ste. 200, Tucson, AZ 85719 (520) 320-0156

Call us least two full working days before you begin excavation.
ARIZONA 811
Arizona Blue Stake, Inc.
Dial 8-1-1 or 1-800-STAKE-IT (782-5348)
In Maricopa County: (602) 263-1100

DRILLED SHAFT DETAILS - 2 OF 2
SUNSET ROAD - SEGMENT 1
SILVERBELL RD. TO I-10
PROJECT NO. 4RTSUN

SUNSET ROAD - SILVERBELL ROAD TO I-10 - PROJECT NO. 4RTSUN

Scale:	As Noted	Sheet S08 of S43	Page 77 of 203

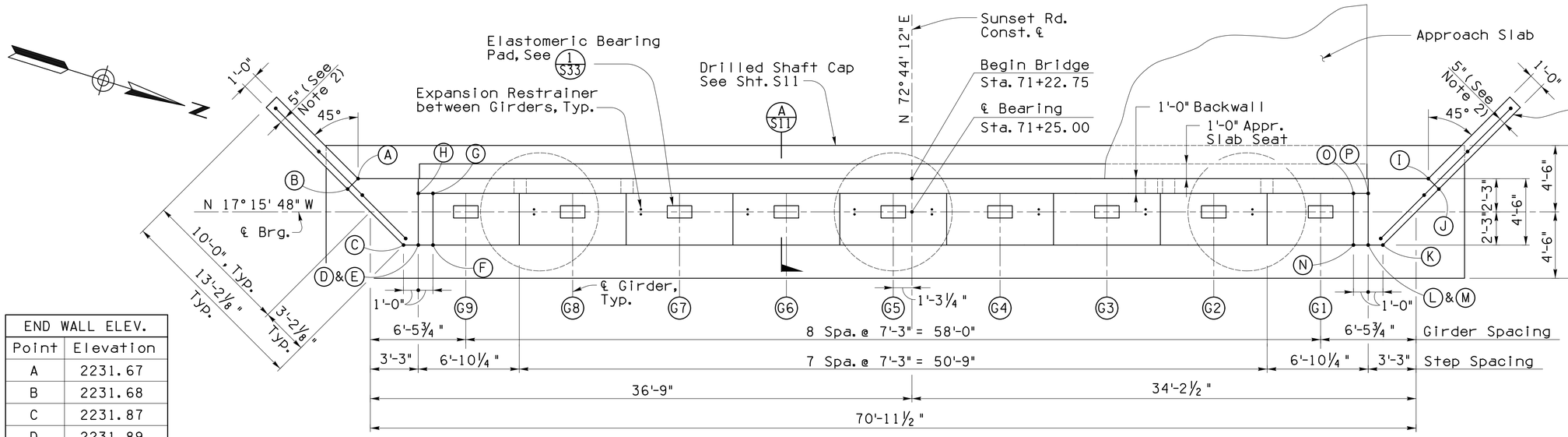

END WALL ELEV.	
Point	Elevation
A	2231.67
B	2231.68
C	2231.87
D	2231.89
E	2230.47
F	2230.13
G	2230.02
H	2230.37
I	2231.72
J	2231.73
K	2231.92
L	2231.94
M	2230.52
N	2230.18
O	2230.07
P	2230.42

PLAN - ABUTMENT 1
¼" = 1'-0"

Notes:
1. Abutment backwall elevations are shown at front face of backwall.
2. Locate center of handrail 5" from wingwall outside face.

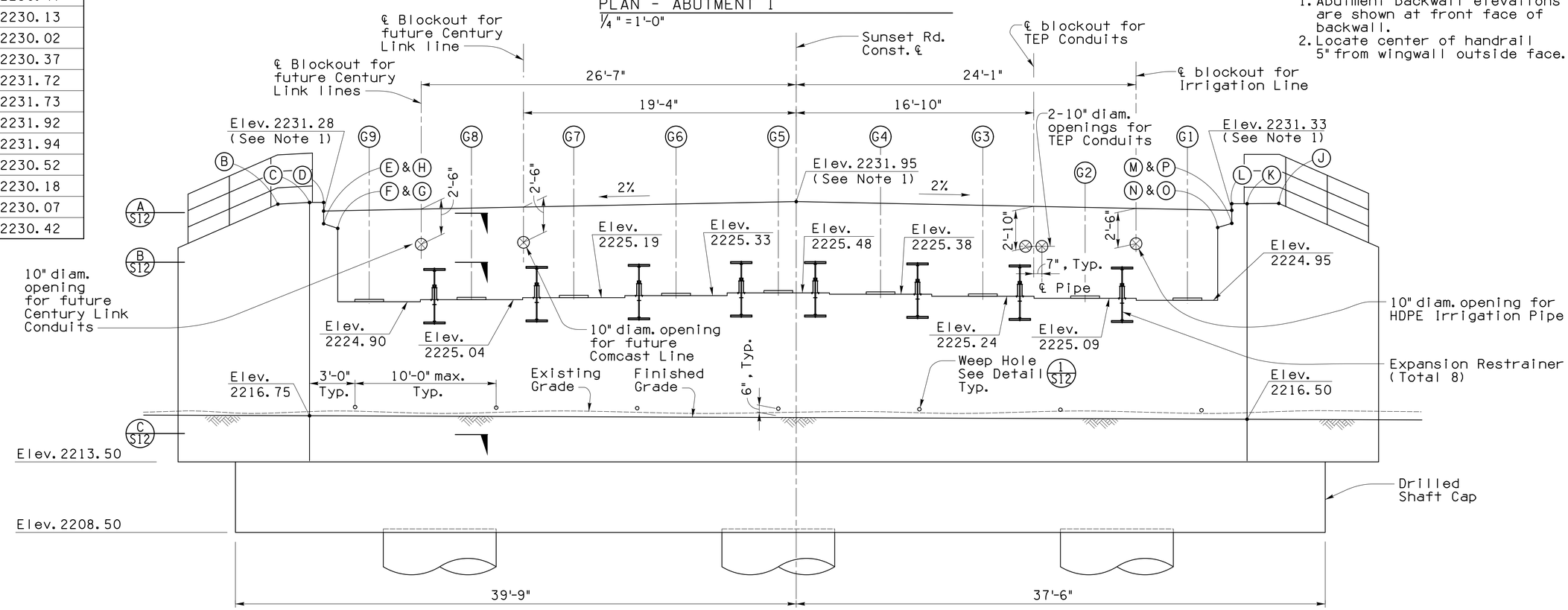

ELEVATION - ABUTMENT 1
¼" = 1'-0"

Priscilla S. Cornello, P.E., Director

Designed	JAM	11/15
Drawn	JHS, MJL	11/15
Checked	CGP	11/15
Proj. Engr.	JAM	11/15

No.	Revision Description	Engineer	Date

Structural Grace, Inc
13131 E. Fort Lowell Rd., Ste. 200, Tucson, AZ 85719 (520) 320-4156

Call at least two full working days before you begin excavation. ARIZONA BLUE STAKE, INC. Dial 8-1-1 or 1-800-STAKE-IT (782-5348) In Maricopa County: (602) 263-1100

Pima County Department of Transportation

ABUTMENT 1 PLAN & ELEVATION
SUNSET ROAD - SEGMENT 1
SILVERBELL RD. TO I-10
PROJECT NO. 4RTSUN

SUNSET ROAD - SILVERBELL ROAD TO I-10 - PROJECT NO. 4RTSUN

Scale:	As Noted	Sheet S09 of S43	Page 78 of 203

FILE NAME: W:\Jobs\2013\1326_Sunset\1326_Working\1326_Sunset_S09_AB1.dgn DATE: 11/16/2015 TIME: 4:33:06 PM MLichtenstein

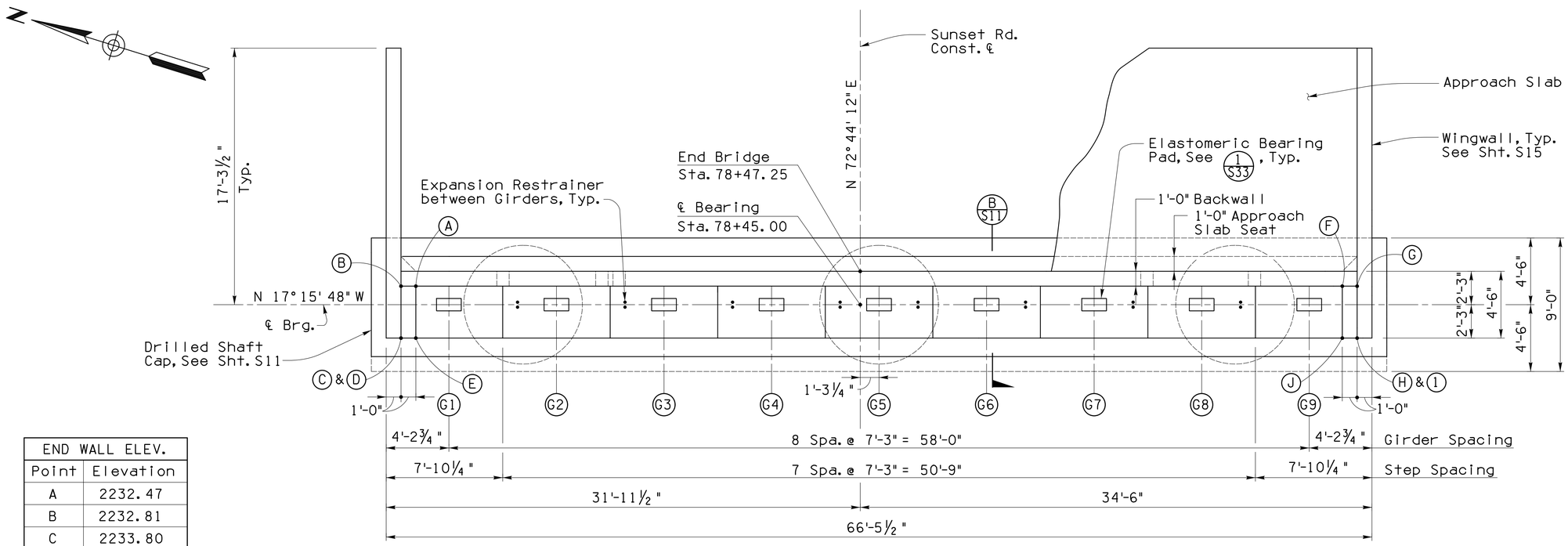

PLAN - ABUTMENT 2
¼" = 1'-0"

END WALL ELEV.	
Point	Elevation
A	2232.47
B	2232.81
C	2233.80
D	2232.88
E	2232.54
F	2232.42
G	2232.76
H	2233.75
I	2232.83
J	2232.49

Note:
1. Abutment backwall elevations are shown at front face of backwall.

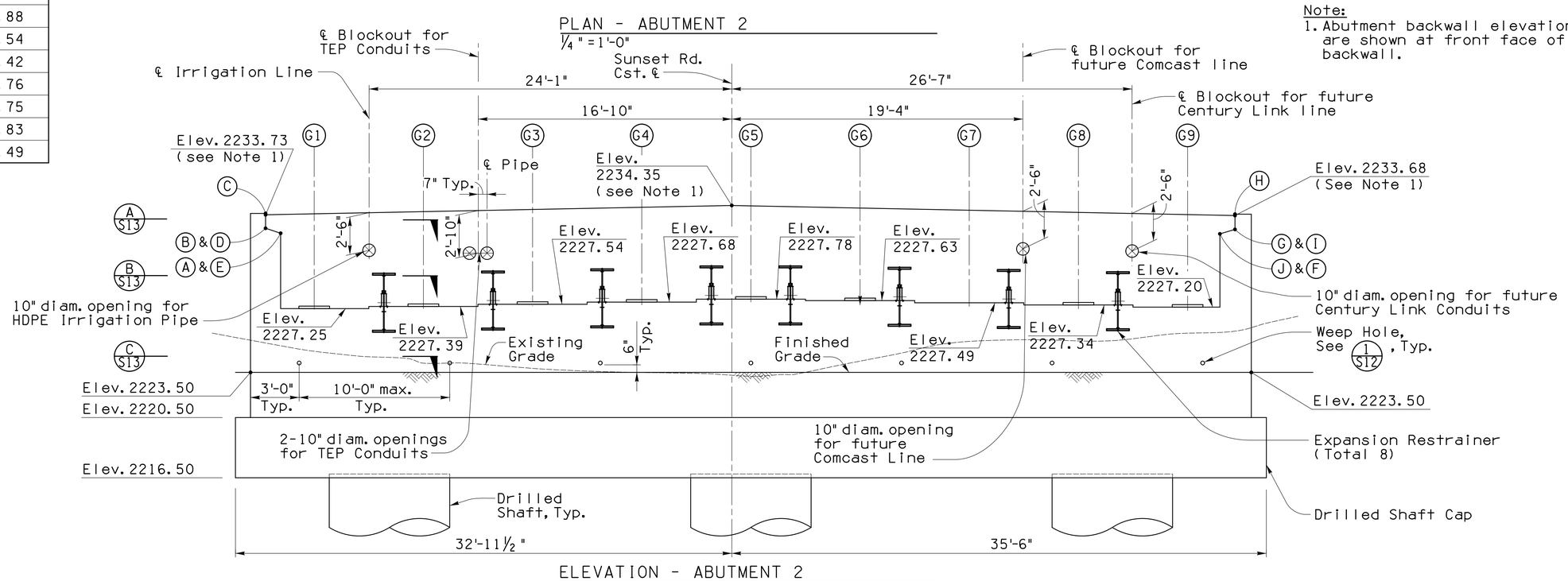

ELEVATION - ABUTMENT 2
¼" = 1'-0"

Priscilla S. Cornello, P.E., Director

Designed	JAM	Date 11/15
Drawn	JHS, NJL	11/15
Checked	CGP	11/15
Proj. Engr.	JAM	11/15

No.	Revision Description	Engineer	Date

Structural Grace, Inc
1435 E. Fort Lowell Rd., Ste. 200, Tucson, AZ 85719 (520) 320-0156

Call us least two full working days before you begin excavation
ARIZONA 811
Arizona Blue Stake, Inc.
Dial 8-1-1 or 1-800-STAKE IT (782-5348)
In Maricopa County: (602) 263-1100

Pima County Department of Transportation

ABUTMENT 2 PLAN & ELEVATION
SUNSET ROAD - SEGMENT 2
SILVERBELL RD. TO I-10

PROJECT NO. 4RTSUN

SUNSET ROAD - SILVERBELL ROAD TO I-10 - PROJECT NO. 4RTSUN

Scale:	As Noted	Sheet S10 of S43	Page 79 of 203

FILE NAME: W:\Jobs\2013\1326_Sunset\1326_Working\1326_Sunset_S10_AB2.dgn DATE: 11/16/2015 TIME: 4:33:07 PM MLichtenstein

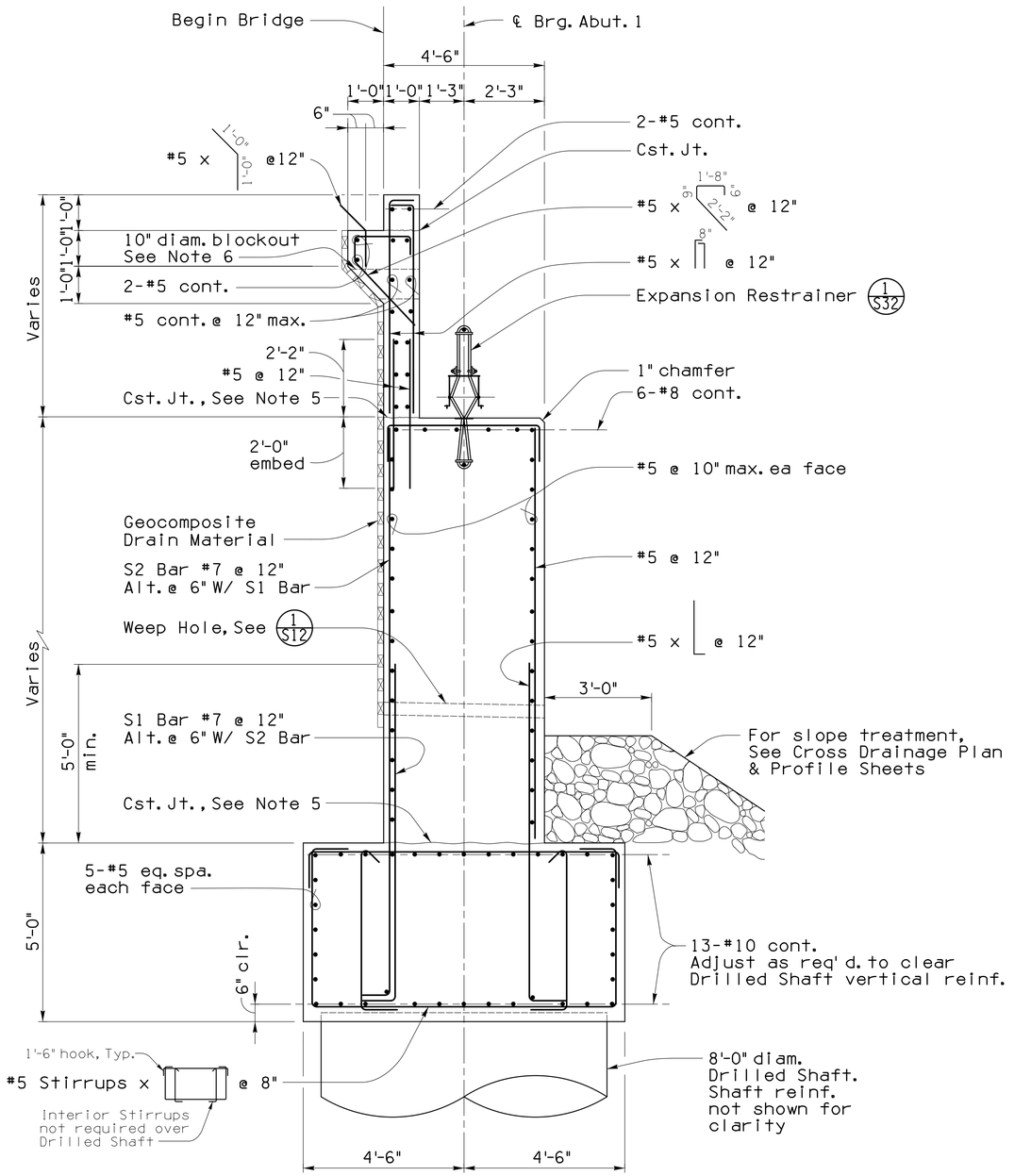

SECTION - ABUTMENT 1 (A/S09)

½" = 1'-0"

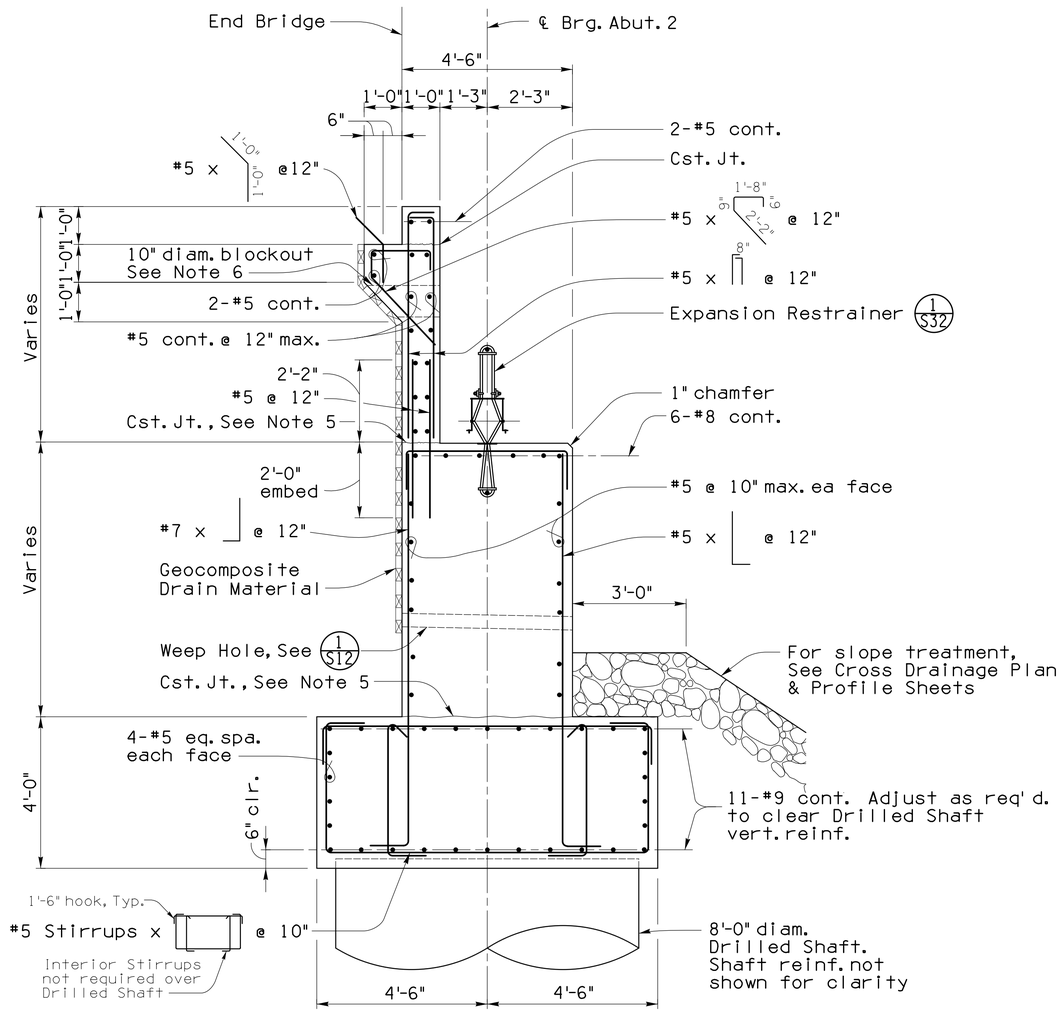

SECTION - ABUTMENT 2 (B/S10)

½" = 1'-0"

Notes:

1. Drilled shaft cap reinforcement splices where
   #9 bar..... 4'-10"
   #10 bar..... 6'-0"
2. All continuous horizontal reinforcement in backwall and abutment except as noted above may be spliced with the following minimum lap length:
   #5 bar..... 1'-10"
   #8 bar..... 4'-0"
3. Bars shall not be spliced within lap length of adjacent bars. Top cap longitudinal reinforcing shall be spliced at midpoint between shafts; bottom cap long. reinf. shall be spliced over ℄ shaft.
4. Backfill shall be placed and compacted up to the bottom of subgrade prior to setting bridge girders.
5. Construction joints shall be roughened to ¼" min. amplitude.
6. For additional reinforcing around blockout, see Sheet S36.

Priscilla S. Cornelio, P.E., Director

Designed	JAM	11/15
Drawn	JHS, NJL	11/15
Checked	CGP	11/15
Proj. Engr.	JAM	11/15

No.	Revision Description	Engineer	Date

Structural Grace, Inc
1131 E. Fort Lowell Rd., Ste. 200, Tucson, AZ 85719 (520) 320-0156

Call at least two full working days before you begin excavation. ARIZONA 811 Arizona Blue Stake, Inc. Dial 8-1-1 or 1-800-STAKE-IT (782-5348) In Maricopa County: (602) 263-1100

Pima County Department of Transportation

SUNSET ROAD - SILVERBELL ROAD TO I-10 - PROJECT NO. 4RTSUN

ABUTMENT SECTIONS - 1 OF 3
SUNSET ROAD - SEGMENT 1
SILVERBELL RD. TO I-10

PROJECT NO. 4RTSUN

Scale:	As Noted	Sheet S11 of S43	Page 80 of 203

FILE NAME: W:\Jobs\2013\1326_Sunset\1326_Working\1326_Sunset_S11_AD1.dgn DATE: 11/16/2015 TIME: 4:33:07 PM MLichtenstein

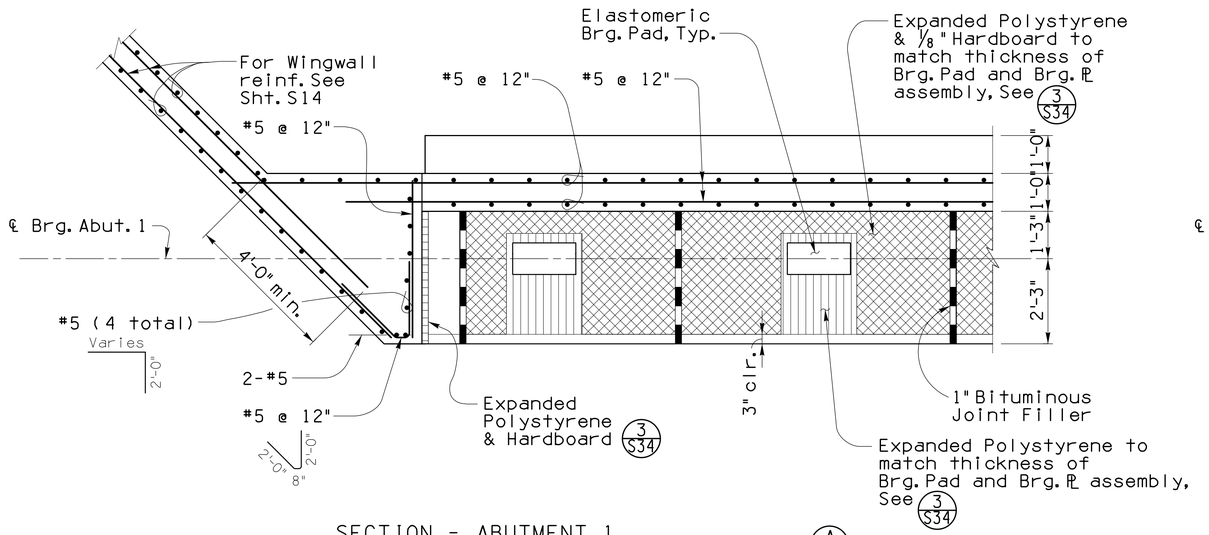

SECTION - ABUTMENT 1 (A/S09)
1/2" = 1'-0"

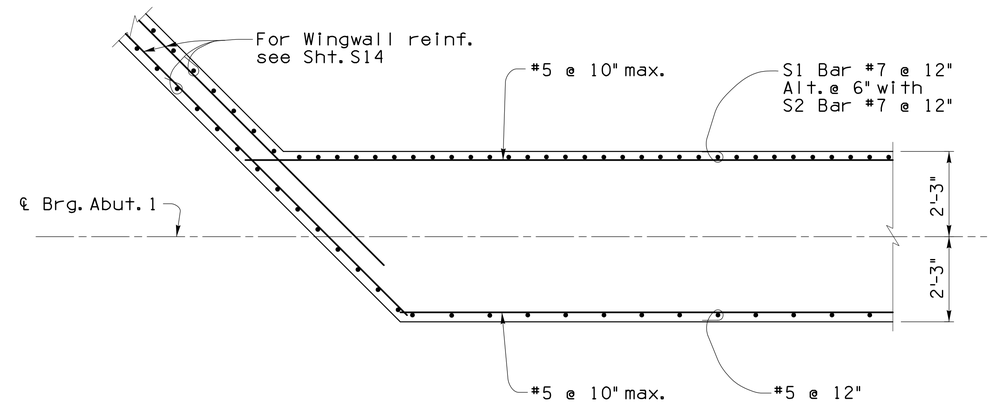

SECTION - ABUTMENT 1 (C/S09)
1/2" = 1'-0"

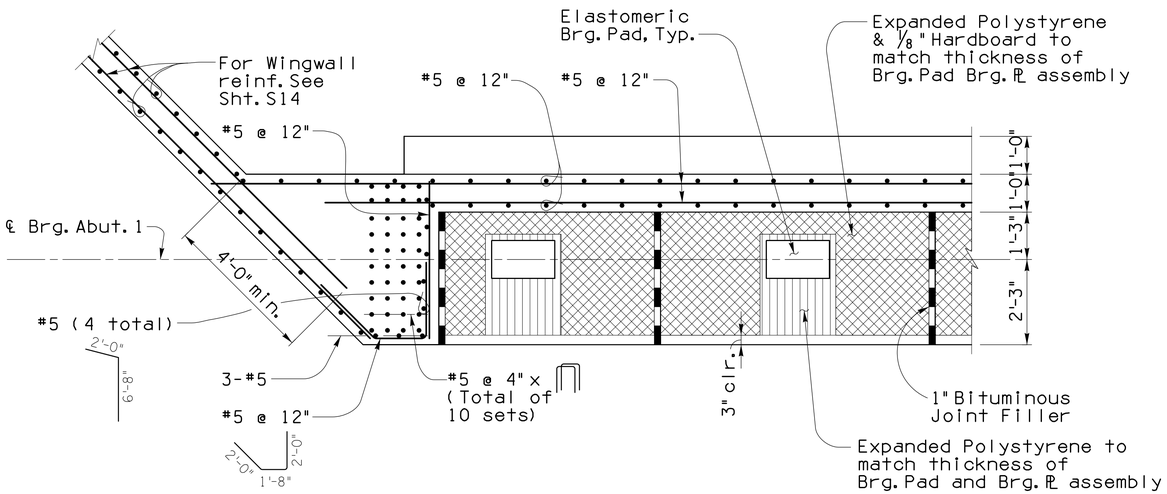

SECTION - ABUTMENT 1 (B/S09)
1/2" = 1'-0"

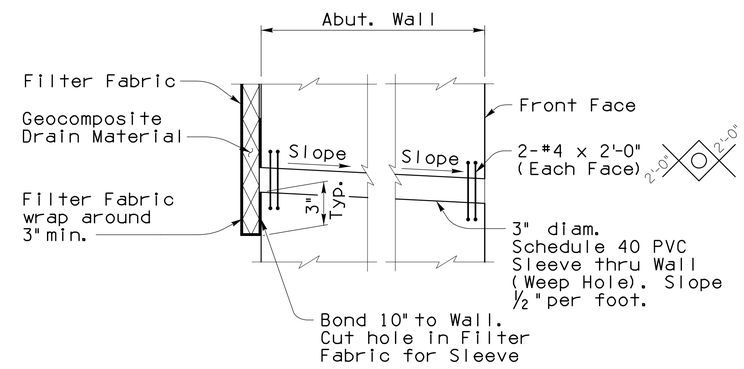

WEEP HOLE DETAIL (1/S09 1/S10 1/S11 1/S14 1/S15)
No Scale

Priscilla S. Cornelio, P.E., Director

			Date
Designed	JAM		11/15
Drawn	JHS, NJL		11/15
Checked	CGP		11/15
Proj. Engr.	JAM		11/15

No.	Revision Description	Engineer	Date

Structural Grace, Inc
1101 E. Fort Lowell Rd., Ste. 200, Tucson, AZ 85719 (520) 320-0156

Call at least two full working days before you begin excavation. ARIZONA811 Arizona Blue Stake, Inc. Dial 8-1-1 or 1-800-STAKE-IT (782-5348) In Maricopa County: (602) 263-1100

Pima County Department of Transportation

ABUTMENT SECTIONS - 2 OF 3
SUNSET ROAD - SEGMENT 1
SILVERBELL RD. TO I-10

PROJECT NO. 4RTSUN

SUNSET ROAD - SILVERBELL ROAD TO I-10 - PROJECT NO. 4RTSUN

Scale:	As Noted	Sheet S12 of S43	Page 81 of 203

FILE NAME: W:\Jobs\2013\1326_Sunset\1326_Working\1326_Sunset_S12_AD2.dgn DATE: 11/16/2015 TIME: 4:33:07 PM MLichtenstein

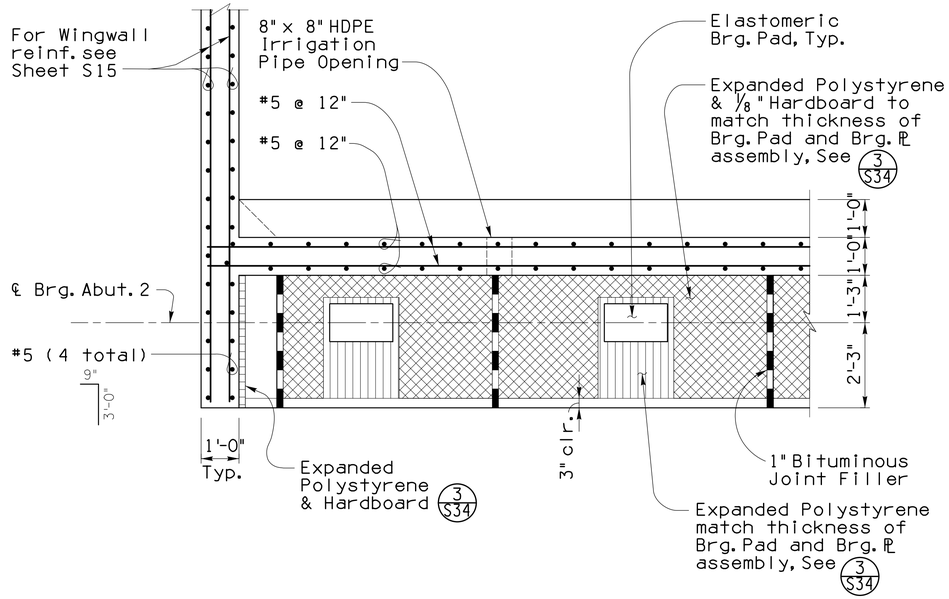

SECTION - ABUTMENT 2 (A/S10)
1/2" = 1'-0"

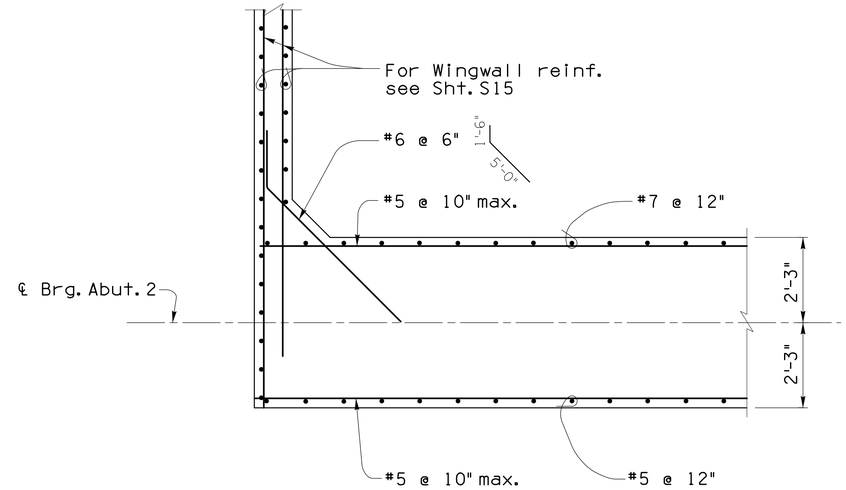

SECTION - ABUTMENT 2 (C/S10)
1/2" = 1'-0"

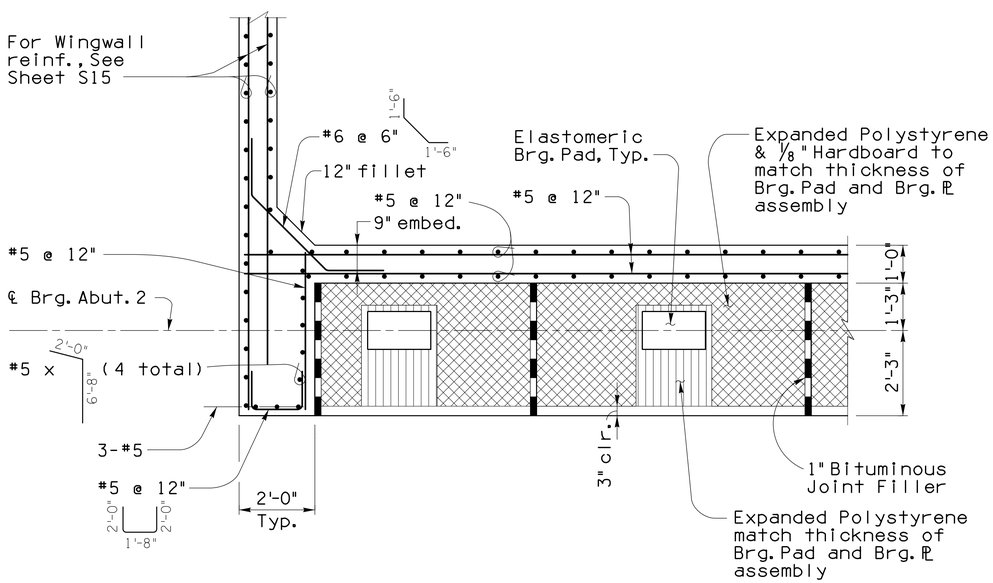

SECTION - ABUTMENT 2 (B/S10)
1/2" = 1'-0"

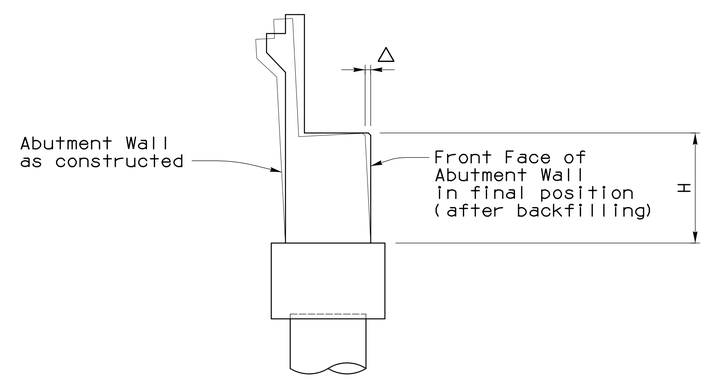

Offset (Δ) = 1/8"/ft of Wall height (H)

ABUTMENT WALL OFFSET DETAIL (1/—)
No Scale

Priscilla S. Cornello, P.E., Director

Designed	JAM	11/15
Drawn	JHS, NJL	11/15
Checked	CGP	11/15
Proj. Engr.	JAM	11/15

No.	Revision Description	Engineer	Date

Structural Grace, Inc
1930 E. Fort Lowell Rd., Ste. 200, Tucson, AZ 85719 (520) 320-0156

Call us least two full working days before you begin excavation: ARIZONA 811 Arizona Blue Stake, Inc. Dial 8-1-1 or 1-800-STAKE IT (782-5348) In Maricopa County: (602) 263-1100

Pima County Department of Transportation

ABUTMENT SECTIONS - 3 OF 3
SUNSET ROAD - SEGMENT 1
SILVERBELL RD. TO I-10
PROJECT NO. 4RTSUN

SUNSET ROAD - SILVERBELL ROAD TO I-10 - PROJECT NO. 4RTSUN

Scale:	As Noted	Sheet S13 of S43	Page 82 of 203

FILE NAME: W:\Jobs\2013\1326_Sunset\1326_Working\1326_Sunset_S13_AD3.dgn DATE: 11/16/2015 TIME: 4:33:08 PM MLichtenstein

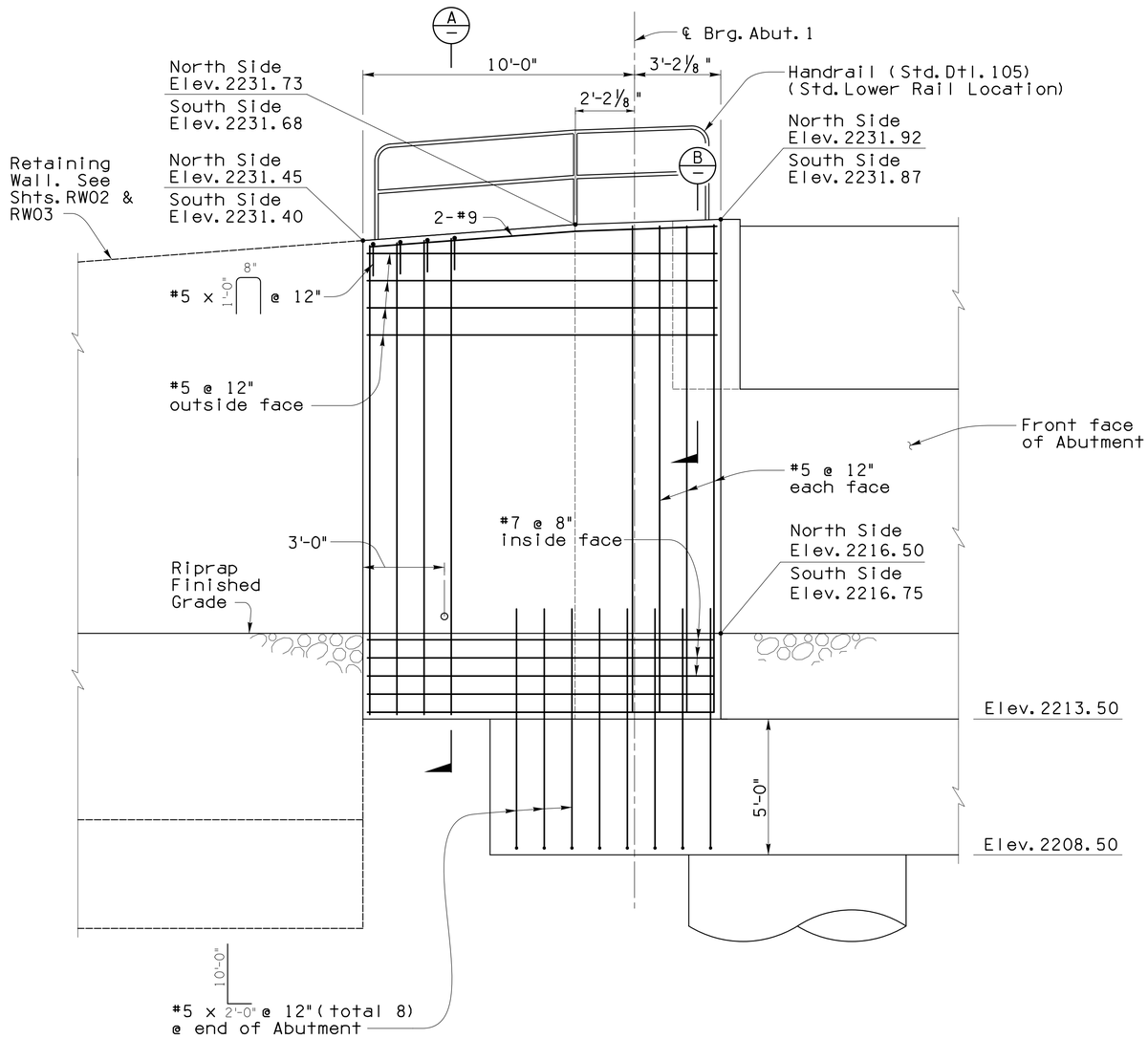

Note:
South side wingwall elevation shown, north side wingwall elevation similar.

ELEVATION - ABUTMENT 1 WINGWALL
3/8" = 1'-0"

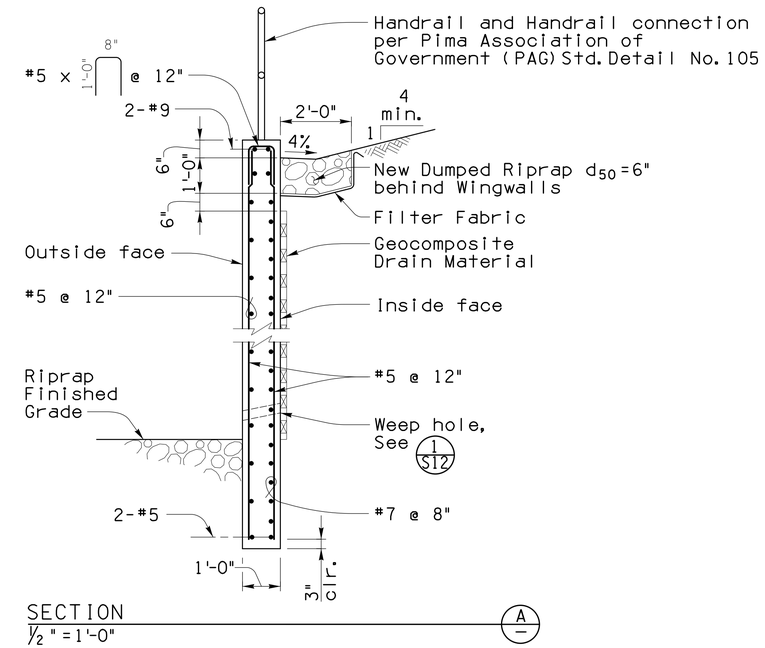

SECTION A
1/2" = 1'-0"

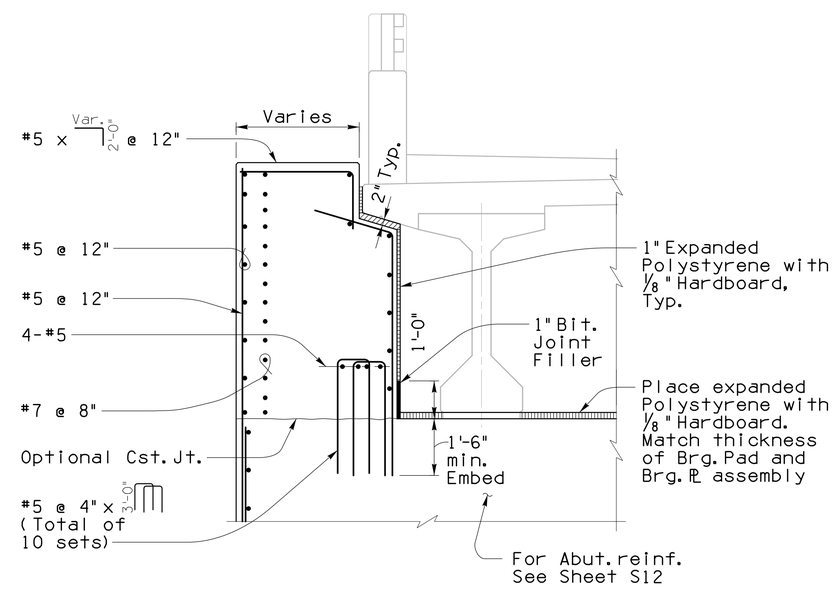

SECTION B
1/2" = 1'-0"

Priscilla S. Cornello, P.E., Director

Designed	JAM	11/15
Drawn	JHS, NJL	11/15
Checked	CGP	11/15
Proj. Engr.	JAM	11/15

No.	Revision Description	Engineer	Date

Structural Grace, Inc
1434 E. Fort Lowell Rd., Ste. 200, Tucson, AZ 85719 (520) 320-0156

Call at least two full working days before you begin excavation.
ARIZONA 811
Arizona Blue Stake, Inc.
Dial 8-1-1 or 1-800-STAKE-IT (782-5348)
In Maricopa County: (602) 263-1100

Pima County Department of Transportation

WINGWALL ELEVATION AND SECTIONS - 1 OF 2
SUNSET ROAD - SEGMENT 1
SILVERBELL RD. TO I-10
PROJECT NO. 4RTSUN

SUNSET ROAD - SILVERBELL ROAD TO I-10 - PROJECT NO. 4RTSUN

Scale:	As Noted	Sheet S14 of S43	Page 83 of 203

FILE NAME: W:\Jobs\2013\1326_Sunset\1326_Working\1326_Sunset_S14_WW1.dgn DATE: 11/16/2015 TIME: 4:33:08 PM MLichtenstein

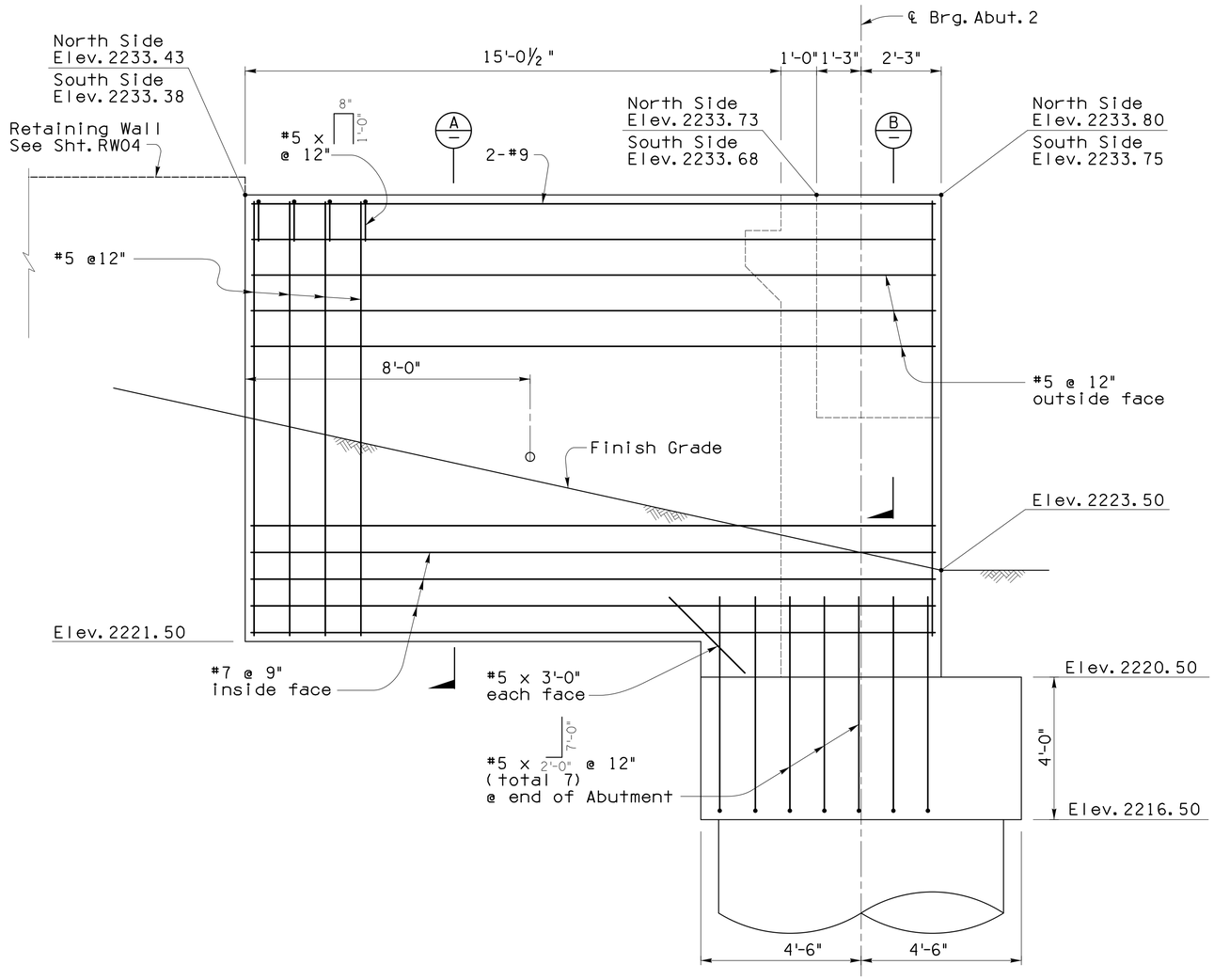

ELEVATION - ABUTMENT 2 WINGWALL
½" = 1'-0"

Note:
North side wingwall elevation shown,
south side wingwall elevation similar.

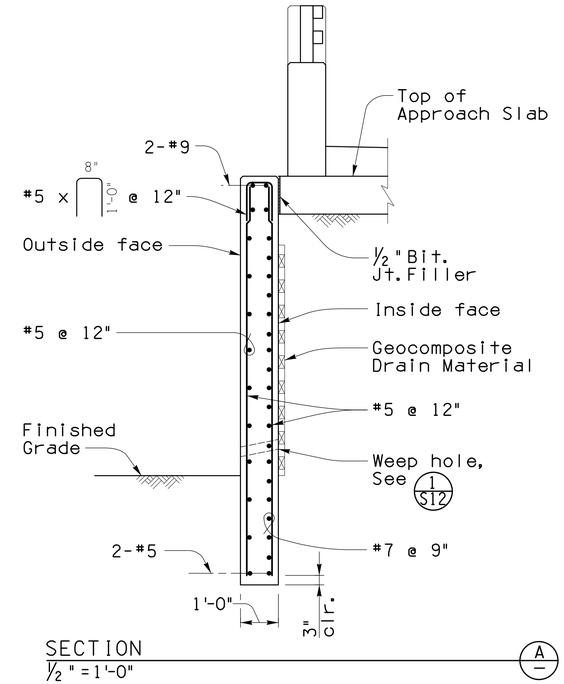

SECTION A
½" = 1'-0"

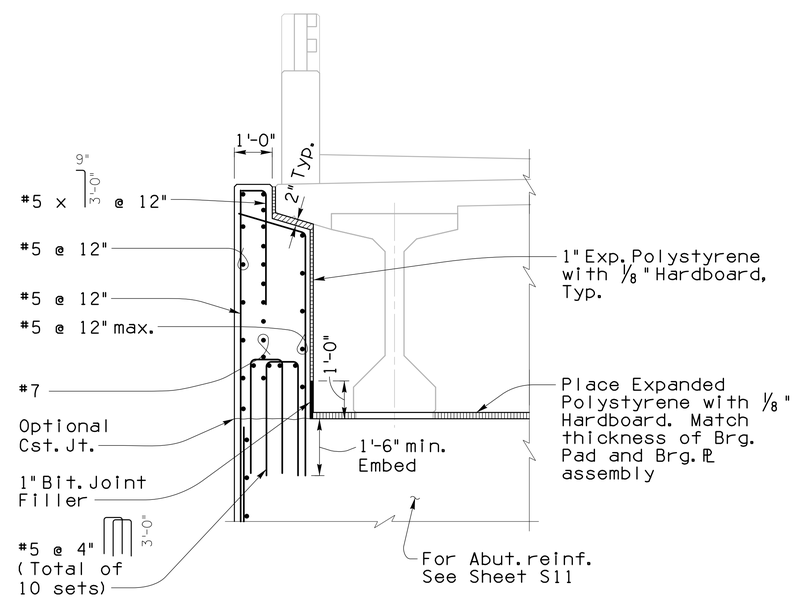

SECTION B
½" = 1'-0"

Priscilla S. Cornelio, P.E., Director

Designed	JAM	Date 11/15
Drawn	JHS, NJL	11/15
Checked	CGP	11/15
Proj. Engr.	JAM	11/15

No.	Revision Description	Engineer	Date

Structural Grace, Inc
13131 E. Fort Lowell Rd., Ste. 200, Tucson, AZ 85719 (520) 320-4156

Call at least two full working days before you begin excavation.
ARIZONA 811
Dial 8-1-1 or 1-800-STAKE IT (782-5348)
In Maricopa County: (602) 263-1100

Pima County Department of Transportation

WINGWALL ELEVATION AND SECTIONS - 2 OF 2
SUNSET ROAD - SEGMENT 1
SILVERBELL RD. TO I-10
PROJECT NO. 4RTSUN

SUNSET ROAD - SILVERBELL ROAD TO I-10 - PROJECT NO. 4RTSUN

Scale:	As Noted	Sheet S15 of S43	Page 84 of 203

FILE NAME: W:\Jobs\2013\1326_Sunset\1326_Working\1326_Sunset_S15_WW2.dgn DATE: 11/16/2015 TIME: 4:33:09 PM MLichtenstein

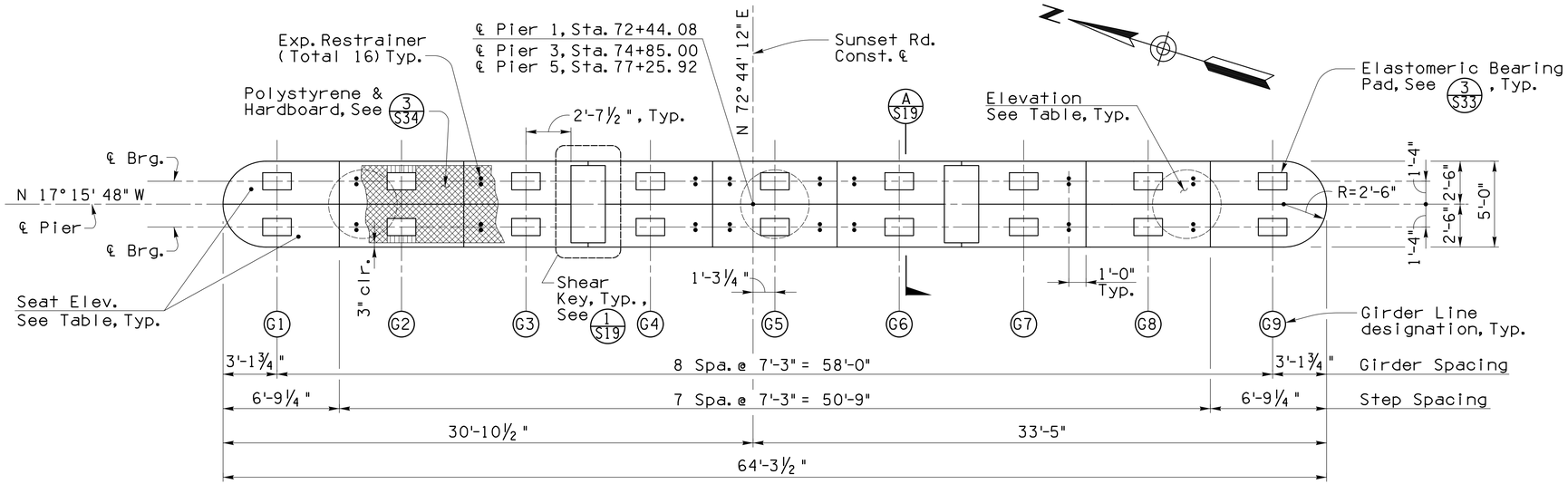

TYPICAL PLAN - PIERS 1, 3 & 5
¼" = 1'-0"

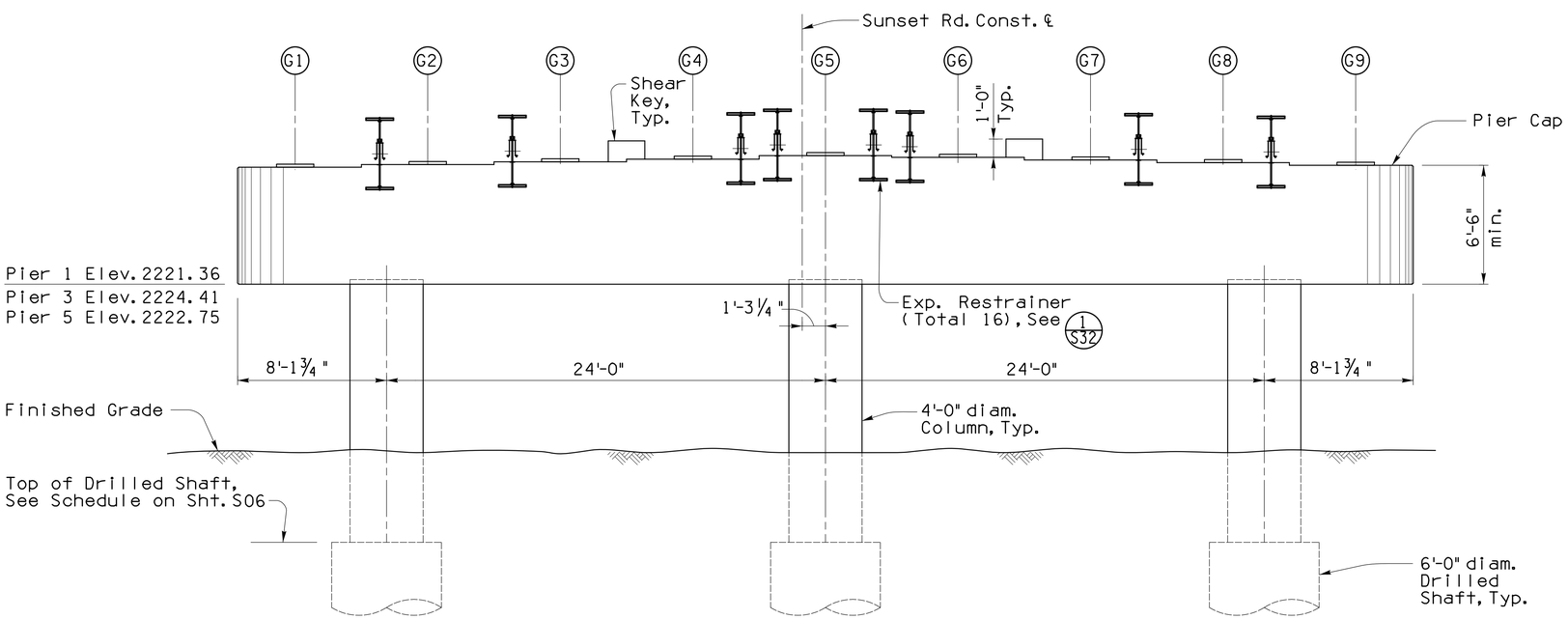

TYPICAL ELEVATION - PIERS 1, 3 & 5
¼" = 1'-0"

Note: Pier 1 Elevation shown, Pier 3 & 5 similar.

SEAT ELEV. @ ℄ BRG. & ℄ GIRDER		
Girder Line	Pier 1	
	Span 1	Span 2
G1	2227.91	2227.96
G2	2228.05	2228.11
G3	2228.20	2228.25
G4	2228.34	2228.40
G5	2228.44	2228.49
G6	2228.29	2228.35
G7	2228.15	2228.20
G8	2228.00	2228.06
G9	2227.86	2227.91

SEAT ELEV. @ ℄ BRG. & ℄ GIRDER		
Girder Line	Pier 3	
	Span 3	Span 4
G1	2230.96	2230.97
G2	2231.11	2231.12
G3	2231.25	2231.26
G4	2231.40	2231.41
G5	2231.49	2231.50
G6	2231.35	2231.36
G7	2231.20	2231.21
G8	2231.06	2231.07
G9	2230.91	2230.92

SEAT ELEV. @ ℄ BRG. & ℄ GIRDER		
Girder Line	Pier 5	
	Span 5	Span 6
G1	2229.55	2229.30
G2	2229.70	2229.45
G3	2229.84	2229.59
G4	2229.99	2229.74
G5	2230.08	2229.83
G6	2229.93	2229.69
G7	2229.79	2229.54
G8	2229.64	2229.40
G9	2229.50	2229.25

Notes:

1. Seat Elevations shall be verified by Contractor prior to erection of Girders.

Priscilla S. Cornelio, P.E., Director

			Date
Designed	JAM		11/15
Drawn	JHS, NJL		11/15
Checked	CGP		11/15
Proj. Engr.	JAM		11/15

No.	Revision Description	Engineer	Date

Structural Grace, Inc
1101 E. Fort Lowell Rd., Ste. 200, Tucson, AZ 85719 (520) 320-0156

Call us least two full working days before you begin excavation. ARIZONA 811 Arizona Blue Stake, Inc. Dial 8-1-1 or 1-800-STAKE-IT (782-5348) In Maricopa County: (602) 263-1100

Pima County Department of Transportation

PIERS 1, 3 & 5 - TYP. PLAN & ELEV.
SUNSET ROAD - SEGMENT 1
SILVERBELL RD. TO I-10

PROJECT NO. 4RTSUN

SUNSET ROAD - SILVERBELL ROAD TO I-10 - PROJECT NO. 4RTSUN

Scale:	As Noted	Sheet S16 of S43	Page 85 of 203

FILE NAME: W:\Jobs\2013\1326_Sunset\1326_Working\1326_Sunset_S16_PR3.dgn DATE: 11/16/2015 TIME: 4:33:09 PM MLichtenstein

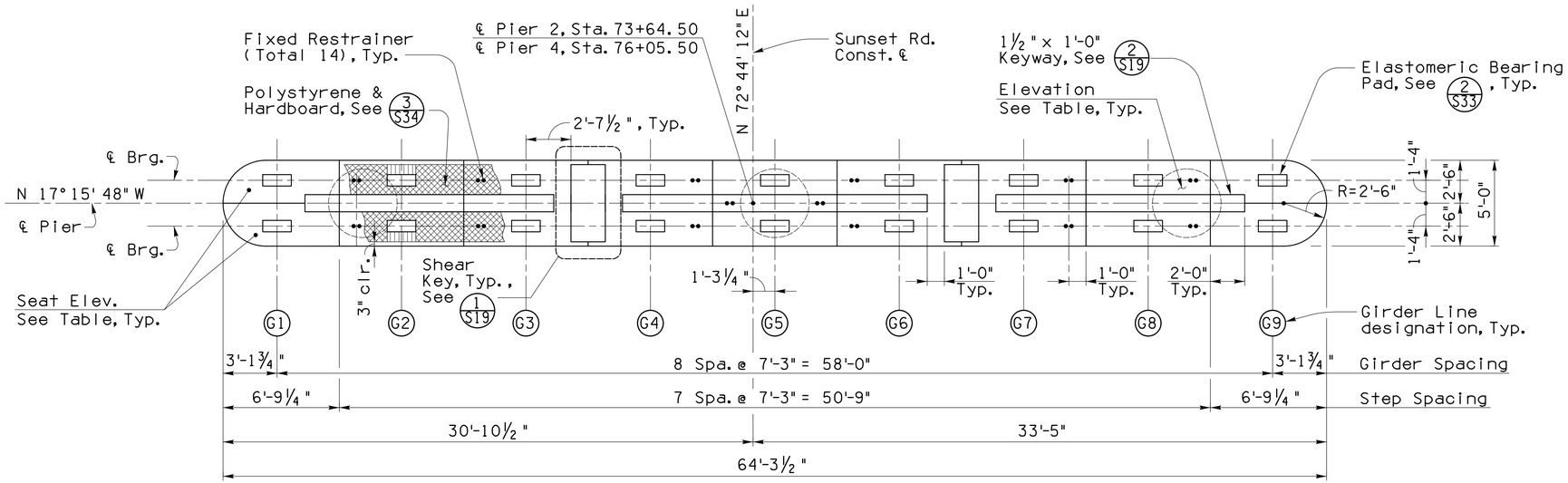

TYPICAL PLAN - PIERS 2 & 4

¼" = 1'-0"

SEAT ELEV. @ ℄ BRG. & ℄ GIRDER		
Girder Line	Pier 2	
	Span 2	Span 3
G1	2230.17	2230.20
G2	2230.31	2230.34
G3	2230.46	2230.49
G4	2230.60	2230.63
G5	2230.69	2230.73
G6	2230.55	2230.58
G7	2230.40	2230.44
G8	2230.26	2230.29
G9	2230.11	2230.15

SEAT ELEV. @ ℄ BRG. & ℄ GIRDER		
Girder Line	Pier 4	
	Span 4	Span 5
G1	2230.92	2230.91
G2	2231.07	2231.05
G3	2231.21	2231.20
G4	2231.36	2231.34
G5	2231.45	2231.44
G6	2231.31	2231.29
G7	2231.16	2231.15
G8	2231.02	2231.00
G9	2230.87	2230.86

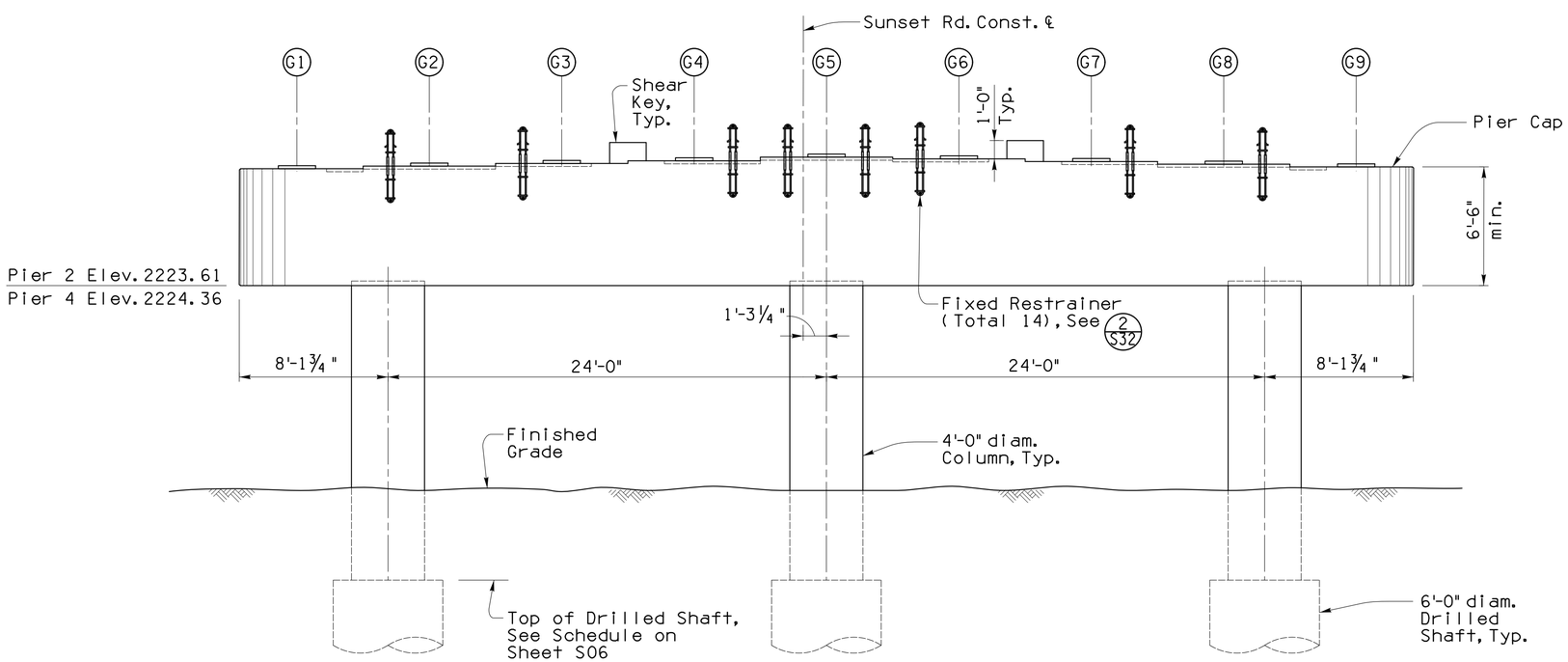

TYPICAL ELEVATION - PIERS 2 & 4

¼" = 1'-0"

Note: Pier 2 Elevation shown, Pier 4 similar.

Notes:

1. Seat Elevations shall be verified by Contractor prior to erection of Girders.

Priscilla S. Cornello, P.E., Director

Designed	JAM	11/15
Drawn	JHS, NJL	11/15
Checked	CGP	11/15
Proj. Engr.	JAM	11/15

No.	Revision Description	Engineer	Date

Structural Grace, Inc

Call at least two full working days before you begin excavation: ARIZONA BLUE STAKE, INC. Arizona Blue Stake, Inc. Dial 8-1-1 or 1-800-STAKE IT (782-5348) In Maricopa County: (602) 263-1100

Pima County Department of Transportation

PIERS 2 & 4 - TYP. PLAN & ELEV.
SUNSET ROAD - SEGMENT 1
SILVERBELL RD. TO I-10

PROJECT NO. 4RTSUN

SUNSET ROAD - SILVERBELL ROAD TO I-10 - PROJECT NO. 4RTSUN

Scale:	As Noted	Sheet S17 of S43	Page 86 of 203

FILE NAME: W:\Jobs\2013\1326_Sunset\1326_Working\1326_Sunset_S17_PR1.dgn DATE: 11/16/2015 TIME: 4:33:09 PM MLichtenstein

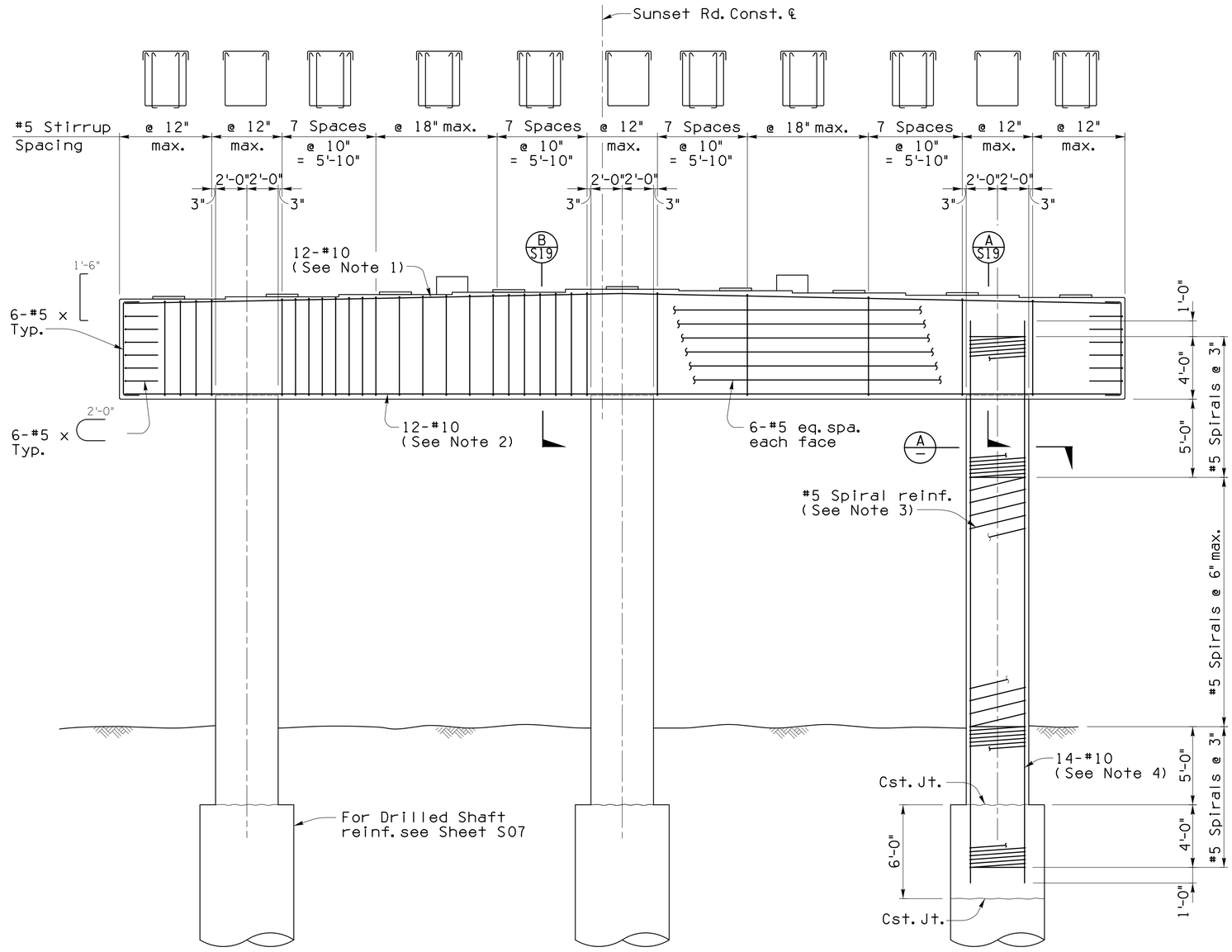

ELEVATION - PIER
1/4" = 1'-0"

Note: Pier 3 Elevation shown, all other Piers similar.

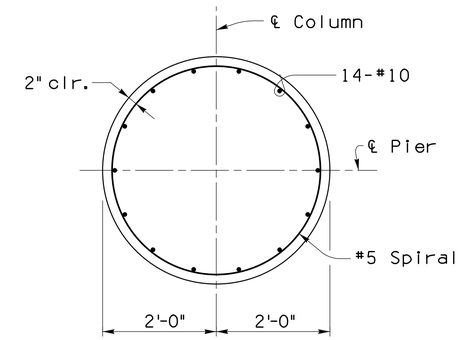

SECTION A
1/4" = 1'-0"

Notes:

1. Top bars in Pier Cap may be spliced at midpoint between Pier Columns, but adjacent bars shall not be spliced within the required lap length of the adjacent bar.
2. Bottom bars in Pier Cap may be spliced at ℄ Pier Column but adjacent bars shall not be spliced within the required lap length of the adjacent bar.
3. Spiral reinforcement may be broken 3" above and below Pier Cap longitudinal reinforcement.
4. Lap splices not allowed for column main longitudinal reinforcement.
5. Minimum lap length of bar splices shall be:

#5 bars	2'-6"	
#10 bars	10'-0"	(Top bars)
	7'-3"	(Bot bars)

Priscilla S. Cornello, P.E., Director

Designed	JAM	11/15
Drawn	JHS, NJL	11/15
Checked	CGP	11/15
Proj. Engr.	JAM	11/15

No.	Revision Description	Engineer	Date

Structural Grace, Inc
1434 E. Fort Lowell Rd., Ste. 200, Tucson, AZ 85719 (520) 320-0156

Call at least two full working days before you begin excavation.
ARIZONA811
Arizona Blue Stake, Inc.
Dial 8-1-1 or 1-800-STAKE IT (782-5348)
In Maricopa County: (602) 263-1100

Pima County Department of Transportation

PIER DETAILS - 1 OF 2
SUNSET ROAD - SEGMENT 1
SILVERBELL RD. TO I-10

PROJECT NO. 4RTSUN

SUNSET ROAD - SILVERBELL ROAD TO I-10 - PROJECT NO. 4RTSUN

Scale:	As Noted	Sheet S18 of S43	Page 87 of 203

FILE NAME: W:\Jobs\2013\1326_Sunset\1326_Working\1326_Sunset_S18_PD1.dgn DATE: 11/16/2015 TIME: 4:33:10 PM MLichtenstein

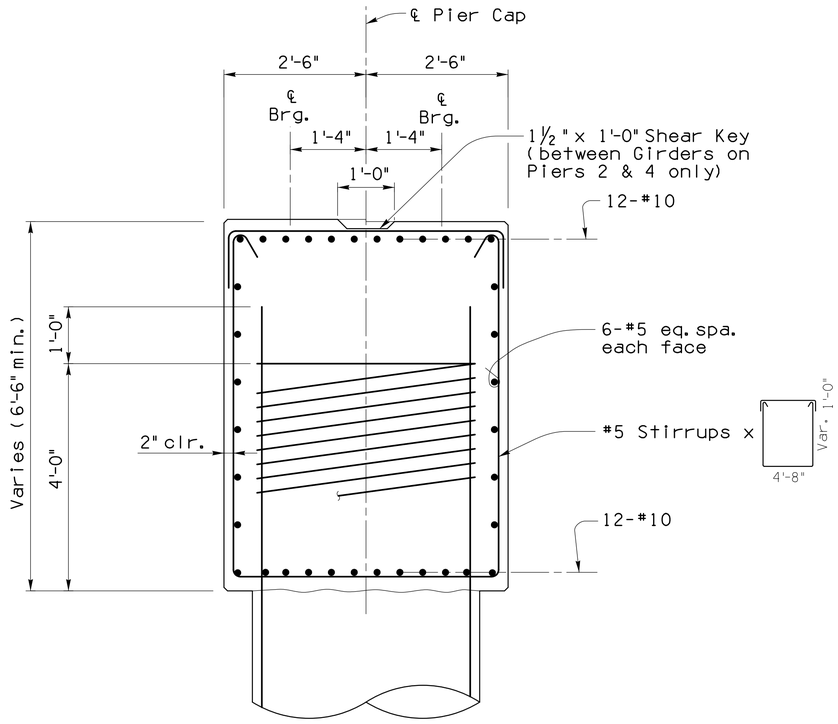

SECTION A S18
¾" = 1'-0"

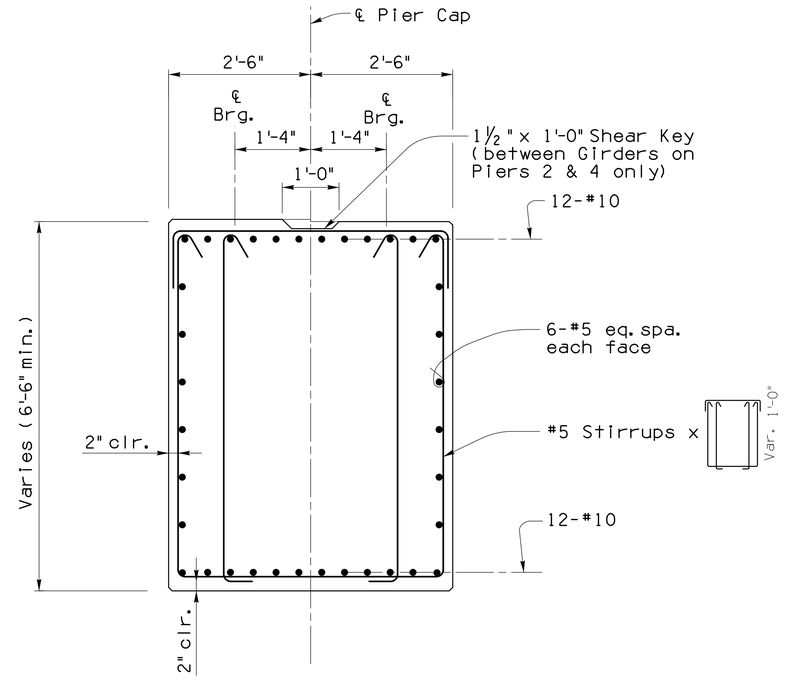

SECTION B S18
¾" = 1'-0"

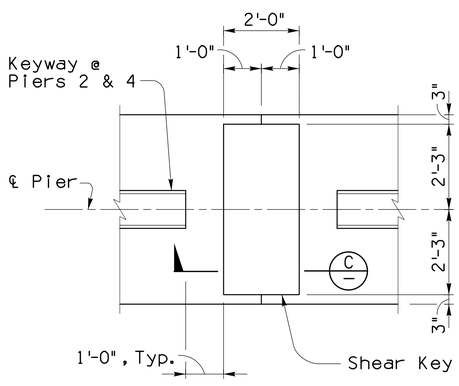

SHEAR KEY DETAIL 1 S16 1 S17
½" = 1'-0"

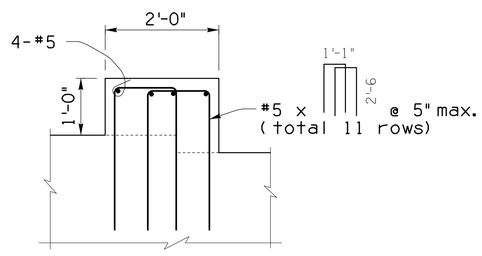

SHEAR KEY SECTION C
¾" = 1'-0

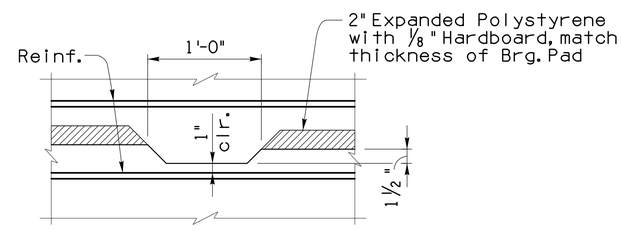

KEYWAY DETAIL 2 S17 2 S30
1½" = 1'-0

Priscilla S. Cornello, P.E., Director

Designed	JAM	11/15
Drawn	JHS, NJL	11/15
Checked	CGP	11/15
Proj. Engr.	JAM	11/15

No.	Revision Description	Engineer	Date

Structural Grace, Inc
1434 E. Fort Lowell Rd., Ste. 200, Tucson, AZ 85719 (520) 320-0156

Call at least two full working days before you begin excavation. ARIZONA811 Arizona Blue Stake, Inc. Dial 8-1-1 or 1-800-STAKE-IT (782-5348) In Maricopa County: (602) 263-1100

Pima County Department of Transportation

SUNSET ROAD - SILVERBELL ROAD TO I-10 - PROJECT NO. 4RTSUN

PIER DETAILS - 2 OF 2
SUNSET ROAD - SEGMENT 1
SILVERBELL RD. TO I-10
PROJECT NO. 4RTSUN

Scale:	As Noted	Sheet S19 of S43	Page 88 of 203

FILE NAME: W:\Jobs\2013\1326_Sunset\1326_Working\1326_Sunset_S19_PD2.dgn DATE: 11/16/2015 TIME: 4:33:10 PM MLichtenstein

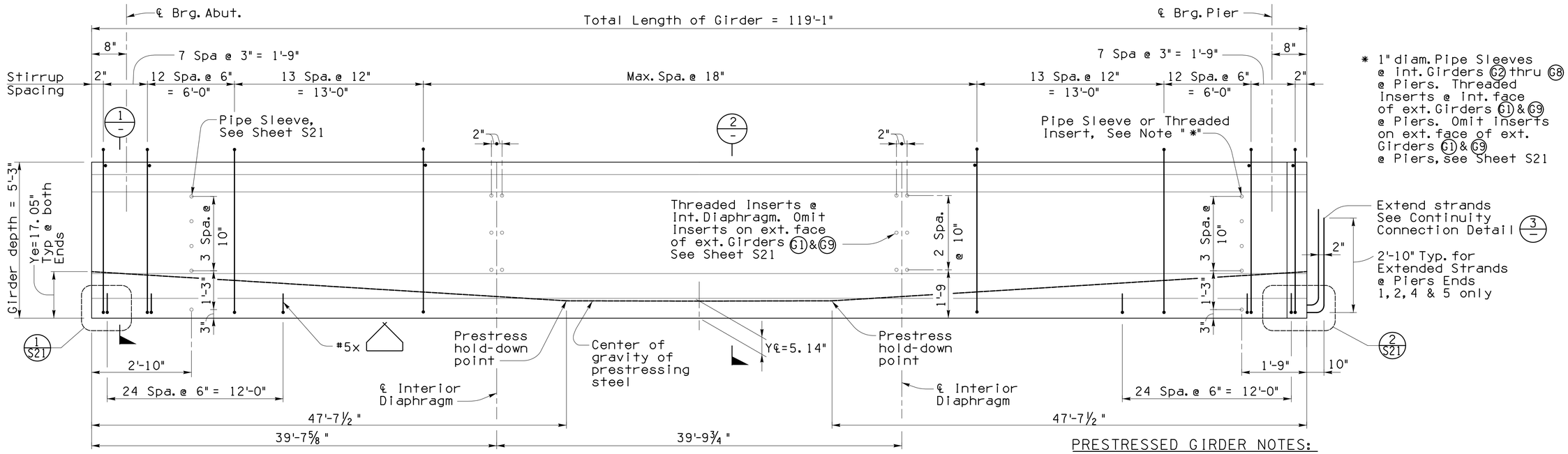

GIRDER ELEVATION
NO SCALE

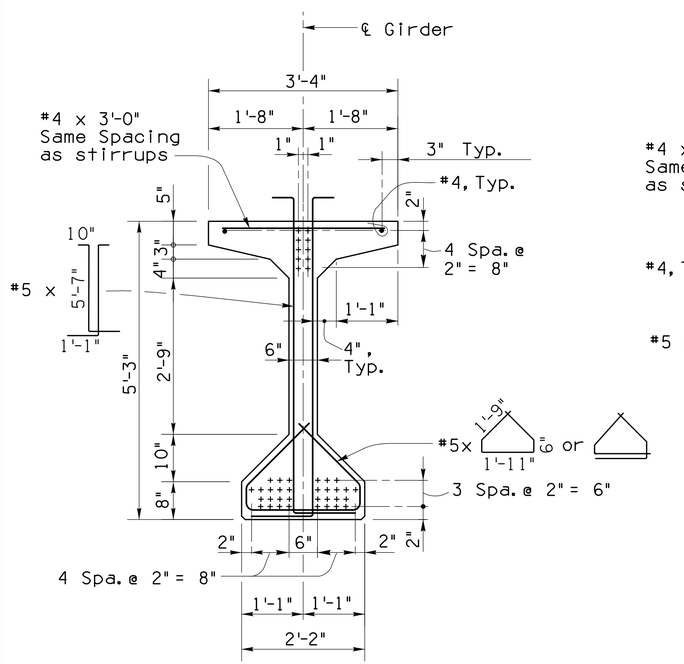

SECTION THRU ENDS (1/-)
¾" = 1'-0

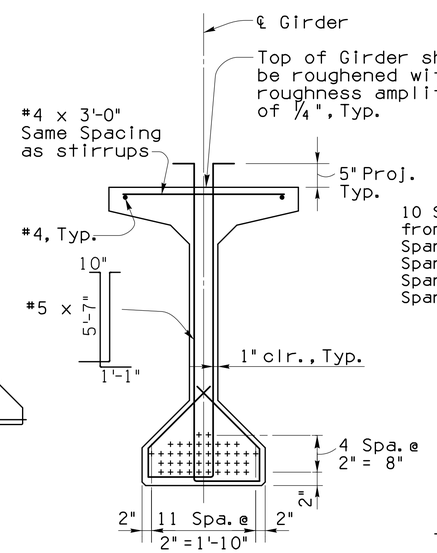

SECTION THRU MIDSPAN (2/-)
¾" = 1'-0

○ = Extended Strand
• = Extended Strand For Adjacent Girder

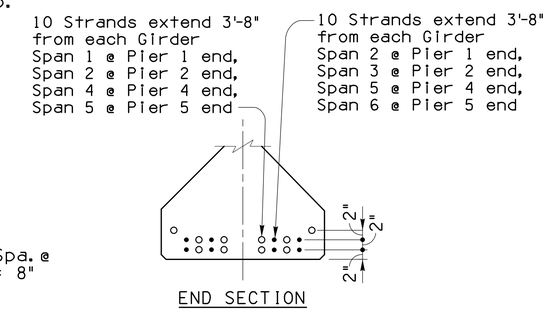

END SECTION

Notes:
1. Strands that are not extended shall be cut flush with the end of the Girder and coated with asphalt material.
2. See Strand Extension Detail on Sheet S31.

CONTINUITY CONNECTION DETAIL (3/-)
1" = 1'-0"

AASHTO TYPE V MOD. GIRDER
(42-6/10" Φ 270 ksi Low Relaxation Strands)

PRESTRESSED GIRDER NOTES:

1. Strands:
   42-6/10" Diam. ASTM A416 Grade 270 7-wire low relaxation prestressing strand with initial strand tension equal to 44.0 kips (0.75 f's). f's=270 ksi. The use of masked strands will not be allowed. The minimum spacing for strands is 2" on centers. Approval of the Engineer is required for deviation.
2. Prestressing Force:
   Pi = 1845 k Initial force per girder at release.
   Pw = 1420 k Working Force - total force remaining per girder after losses.
   Transformed section for prestressing tendons was used in analysis.
3. Prestressing:
   All girders shall be prestressed by the pretensioning method only. A minimum of 2 hold downs (as shown) within the girder shall be used to position the strands.
4. Concrete Strength:
   f'ci = 5500 psi minimum strength at transfer.
   f'c = 6500 psi minimum strength at 28 day.
   The contact surface of the top flange shall be roughened to a depth of approximately ¼ inch.
5. Girder Lengths:
   The girder length shown are measured horizontally and does not account for elastic shortening effects or roadway grade. Casting lengths shall be adjusted as necessary.
6. Girder Bracing:
   The Contractor shall provide temporary bracing for the girders immediately after erection to ensure that they remain stable until the permanent intermediate diaphragms are constructed. The temporary bracing must remain in place until the intermediate diaphragms are poured and the concrete has reached the 28-day strength. The cost of the temporary bracing shall be incidental to the cost of the girders.

Priscilla S. Cornello, P.E., Director

No.	Revision Description	Engineer	Date

		Date
Designed	JAM	11/15
Drawn	JHS, NJL	11/15
Checked	CGP	11/15
Proj. Engr.	JAM	11/15

Structural Grace, Inc
1121 E. Fort Lowell Rd., Ste. 200, Tucson, AZ 85719 (520) 320-0156

Call us least two full working days before you begin excavation. ARIZONA 811 Arizona Blue Stake, Inc. Dial 8-1-1 or 1-800-STAKE IT (782-5348) In Maricopa County: (602) 263-1100

Pima County Department of Transportation

GIRDER DETAILS - 1 OF 2
SUNSET ROAD - SEGMENT 1
SILVERBELL RD. TO I-10

PROJECT NO. 4RTSUN

SUNSET ROAD - SILVERBELL ROAD TO I-10 - PROJECT NO. 4RTSUN

Scale:	As Noted	Sheet S20 of S43	Page 89 of 203

FILE NAME: W:\Jobs\2013\1326_Sunset\1326_Working\1326_Sunset_S20_GD1.dgn DATE: 11/16/2015 TIME: 4:33:11 PM MLichtenstein

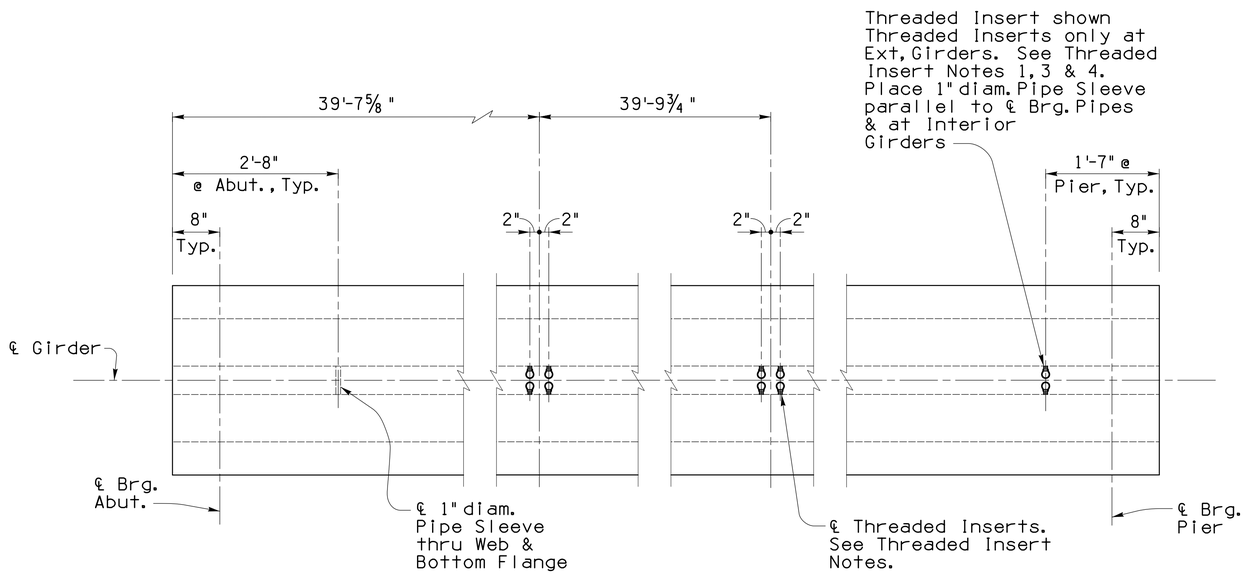

GIRDER END AT ABUTMENTS INTERMEDIATE DIAPHRAGM GIRDER END AT PIERS

PLAN - THREADED INSERT AND 1" DIAM. PIPE SLEEVE DETAIL (SPANS 1 THRU 6)

¾" = 1'-0"

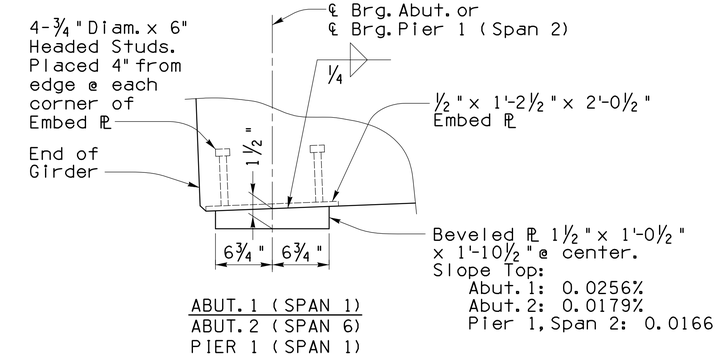

ABUT. 1 (SPAN 1)
ABUT. 2 (SPAN 6)
PIER 1 (SPAN 1)

DETAIL 1/S20
No Scale

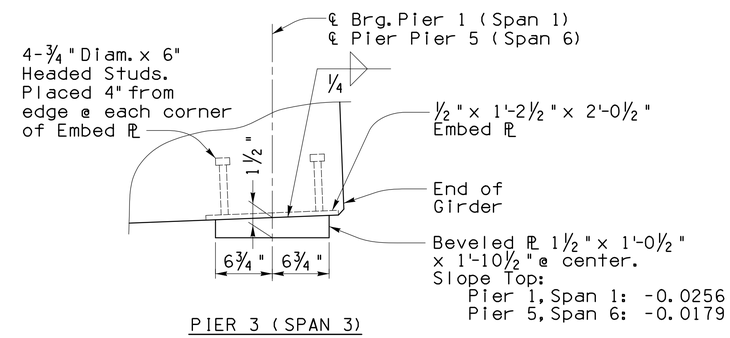

PIER 3 (SPAN 3)

DETAIL 2/S20
No Scale

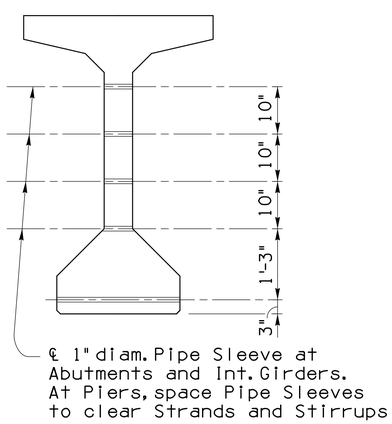

GIRDER END ELEVATIONS @ ABUT. SECTIONS & INT. GIRDER END ELEV. @ PIERS (SPANS 1 THRU 6)

¾" = 1'-0"

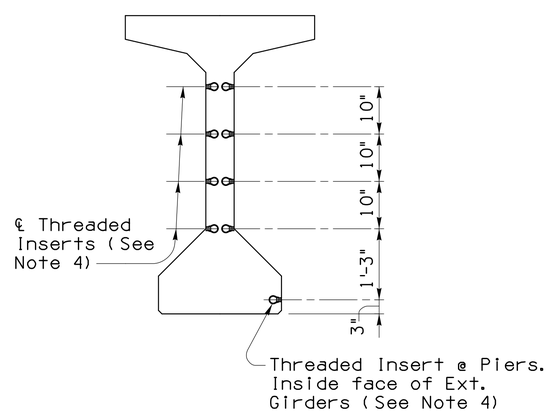

SECTION @ INT. DIAPHRAGM & EXT. GIRDER END ELEV. @ PIERS (SPANS 1 THRU 6)

¾" = 1'-0"

THREADED INSERT NOTES:

1. Threaded inserts shall be ferrule loop type with standard enclosed threads for ¾" diameter threaded rods, Typ. The inserts shall develop an ultimate pullout strength of 10,800 lbs..
2. The threaded inserts at intermediate diaphragms shall be placed normal to the girder web.
3. The threaded inserts at exterior girders at piers shall be placed normal to the web.
4. Omit threaded inserts on outside face of exterior girders.

Priscilla S. Cornello, P.E., Director

Designed	JAM	11/15
Drawn	JHS, NJL	11/15
Checked	CGP	11/15
Proj. Engr.	JAM	11/15

No.	Revision Description	Engineer	Date

Structural Grace, Inc
11311 Fort Lowell Rd., Ste. 200, Tucson, AZ 85719 (520) 320-0156

Call at least two full working days before you begin excavation. ARIZONA 811 Dial 8-1-1 or 1-800-STAKE IT (782-5348) In Maricopa County (602) 263-1100 Access Blue Stake, Inc.

GIRDER DETAILS - 2 OF 2
SUNSET ROAD - SEGMENT 1
SILVERBELL RD. TO I-10
PROJECT NO. 4RTSUN

Pima County Department of Transportation

SUNSET ROAD - SILVERBELL ROAD TO I-10 - PROJECT NO. 4RTSUN

Scale:	As Noted	Sheet S21 of S43	Page 90 of 203

FILE NAME: W:\Jobs\2013\1326_Sunset\1326_Working\1326_Sunset_S21_GD2.dgn DATE: 11/16/2015 TIME: 4:33:11 PM MLichtenstein

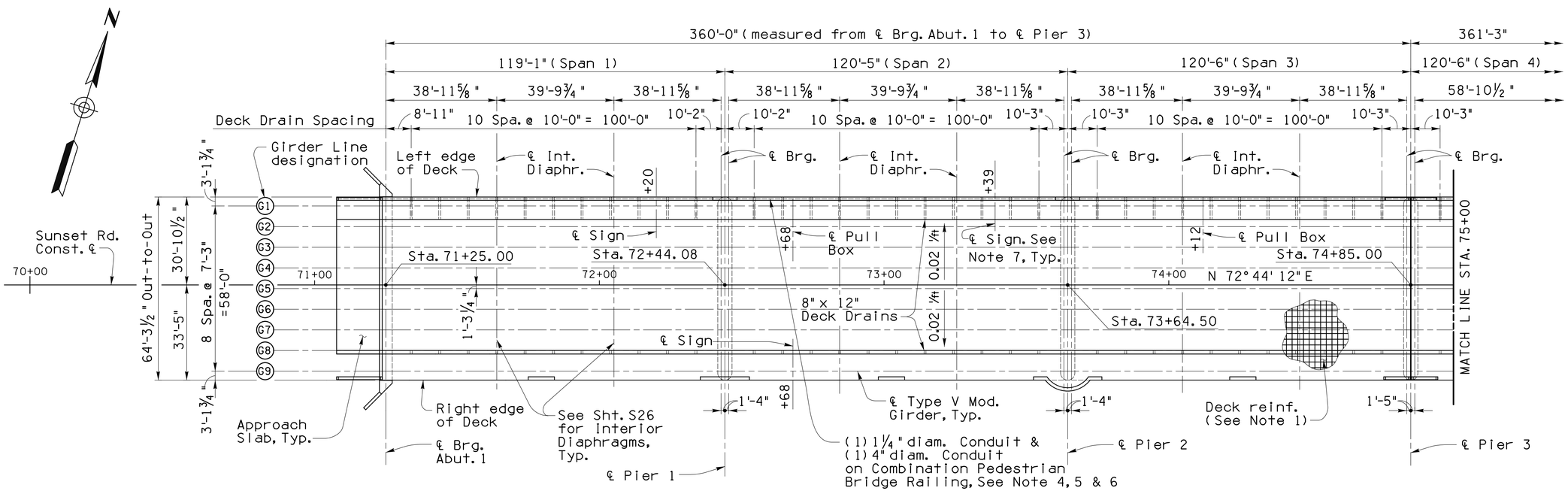

DECK FRAMING PLAN
1" = 20'

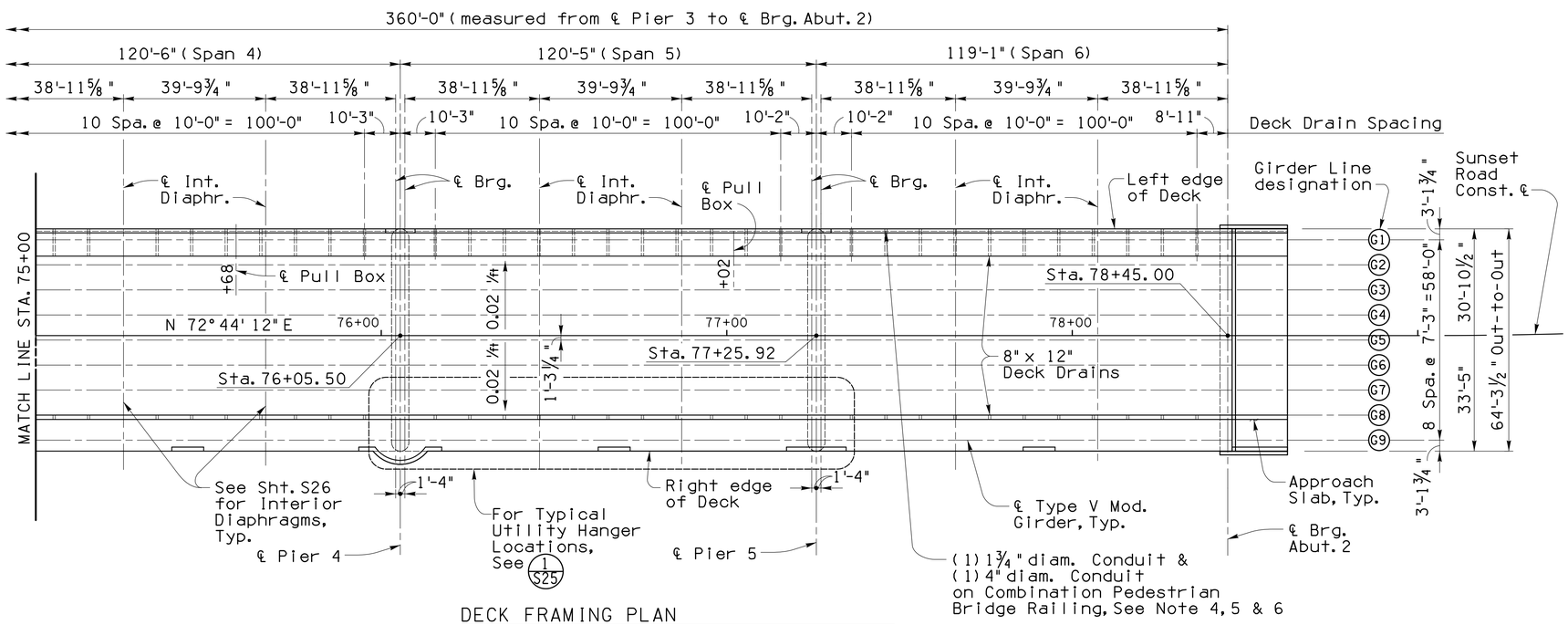

DECK FRAMING PLAN
1" = 20'

Notes:

1. For Deck Reinforcement, see Sheet S23.
2. Transverse Deck Reinforcement shall be placed parallel to ℄ Brg and spaced along PGL.
3. (G1) — Girder Line nomenclature.
4. Concrete Barriers not shown for clarity.
5. Terminate 1¼" Conduit 3' away from the Approach Slab.
6. Provide expansion sleeve for 1¼" & 4" Conduits at every Bridge Expansion Joint.
7. For sign connection detail, see Sheet S35.

Girder Bracing

The Contractor shall provide temporary bracing for the girders immediately after erection to ensure that they remain stable until the permanent intermediate diaphragms are constructed. The temporary bracing must remain in place until the intermediate diaphragms are poured and the concrete has reached the required 28-day strength. The cost of the temporary bracing shall be incidental to the cost of the girders.

Pima County Department of Transportation

Priscilla S. Cornelio, P.E., Director

Designed	JAM	11/15
Drawn	JHS, NJL	11/15
Checked	CGP	11/15
Proj. Engr.	JAM	11/15

No.	Revision Description	Engineer	Date

Structural Grace, Inc
1331 E. East Lowell Rd., Ste. 200, Tucson, AZ 85719 (520) 3204156

Call us least two full working days before you begin excavation. ARIZONA 811 Arizona Blue Stake, Inc. Dial 8-1-1 or 1-800-STAKE-IT (782-5348) In Maricopa County: (602) 263-1100

DECK FRAMING PLAN
SUNSET ROAD - SEGMENT 1
SILVERBELL RD. TO I-10

PROJECT NO. 4RTSUN

SUNSET ROAD - SILVERBELL ROAD TO I-10 - PROJECT NO. 4RTSUN

Scale: As Noted | Sheet S22 of S43 | Page 91 of 203

FILE NAME: W:\Jobs\2013\1326_Sunset\1326_Working\1326_Sunset_S22_FP1.dgn DATE: 11/16/2015 TIME: 4:33:12 PM MLichtenstein

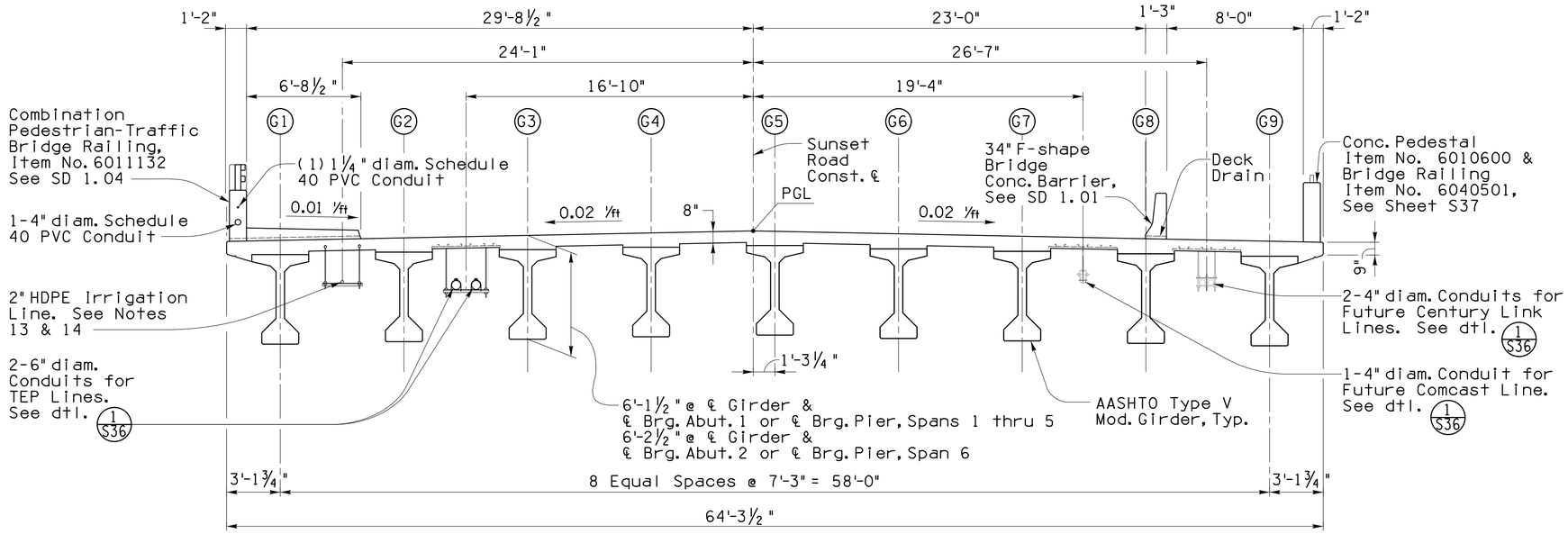

TYPICAL SECTION

¼" = 1'-0"

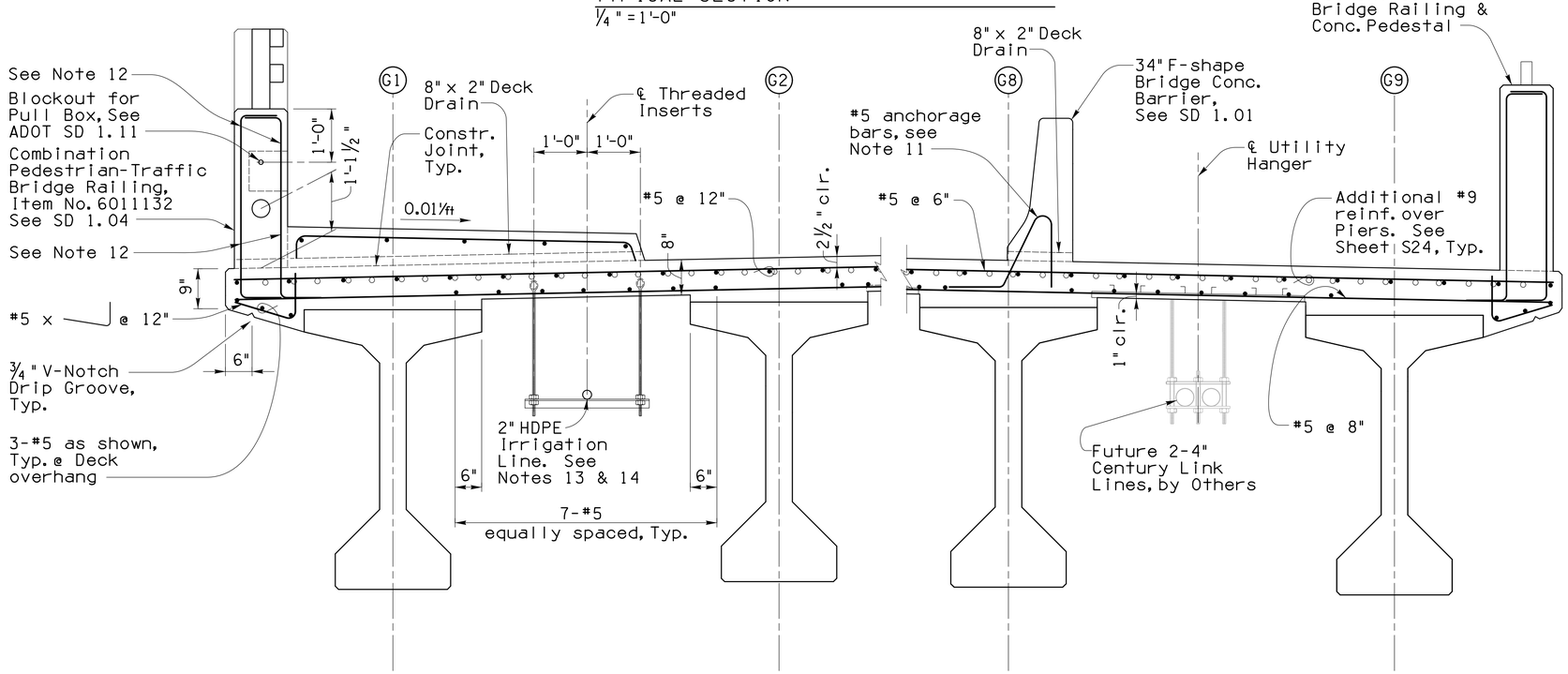

TYPICAL PARTIAL SECTION

¾" = 1'-0"

NOTES:

1. Longitudinal Deck reinforcement shall be placed parallel to ℄ Girder.
2. Transverse Deck reinforcement shall be placed perpendicular to Cst. ℄ with spacing measured along Cst. ℄.
3. Bars shall not be spliced within the required lap length of adjacent bars.
4. Top transverse bars in the Deck Slab shall be spliced where required at mid-span between centerline of Girders.
5. Bottom transverse bars in Deck Slab shall be spliced where required at centerline of Girder.
6. Minimum lap length of bar splices shall be
   #5 bars: 2'-2"
7. Contractor to submit Shop Drawings showing lap splice locations to the Engineer for approval prior to fabrication.
8. Intermediate Diaphragms and expansion Pier Diaphragms shall be poured prior to the Deck pour.
9. Pinned Abutment & Pier Diaphragms shall be poured concurrent with the Deck pour.
10. Contractor shall submit a Deck Pour Schedule to the Engineer for approval prior to placing concrete.
11. For size and spacing of anchorage bars for the 34" F-shape Concrete Bridge Barriers, see SD 1.01. Anchorage bars are included in the linear cost of the concrete Barriers.
12. For size and spacing of reinforcing bars, see SD 1.04.
13. Provide ½" threaded inserts at 42" maximum spacing and at a minimum distance for 24" from face of Abutments, Pier Caps or Interior Diaphragms.
14. For 2" HDPE irrigation line hanger detail, See Irrigation Plans.
15. All cost associated with the construction of the Combination Pedestrian Traffic Bridge Railing, including conduits, pull boxes, sidewalk, railing, dado, anchorage bars and deck drains are included in pay item No. 6011132.
16. ITS and irrigation elec. conduits are incidental to cost of Combination Pedestrian/Traffic Bridge Railing.

Priscilla S. Cornello, P.E., Director

Designed	JAM	11/15
Drawn	JHS, NJL	11/15
Checked	CGP	11/15
Proj. Engr.	JAM	11/15

No.	Revision Description	Engineer	Date

Structural Grace, Inc
1931 E. Fort Lowell Rd., Ste. 200, Tucson, AZ 85719 (520) 320-0156

Call us least two full working days before you begin excavation. ARIZONA 811 Arizona Blue Stake, Inc. Dial 8-1-1 or 1-800-STAKE-IT (782-5348) In Maricopa County: (602) 263-1100

Pima County Department of Transportation

TYP. DECK SECTIONS
SUNSET ROAD - SEGMENT 1
SILVERBELL RD. TO I-10

PROJECT NO. 4RTSUN

SUNSET ROAD - SILVERBELL ROAD TO I-10 - PROJECT NO. 4RTSUN

Scale: As Noted | Sheet S23 of S43 | Page 92 of 203

FILE NAME: W:\Jobs\2013\1326_Sunset\1326_Working\1326_Sunset_S23_DD1.dgn DATE: 11/16/2015 TIME: 4:33:13 PM MLichtenstein

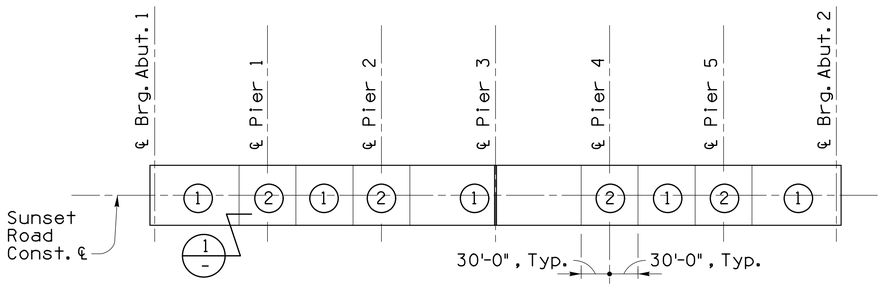

Pour Notes:

1. Numbers ① & ② indicate placing sequence of deck concrete. Pour ② sections a minimum of 12 hours after adjacent ① sections have been poured.
2. Intermediate diaphragms, expansion pier diaphragms and expansion abutment diaphragms shall be poured prior to the deck pour.
3. Fixed Pier diaphragms shall be poured concurrent with the deck pour.
4. Sections ① and ② may be poured consecutively but only in the direction from ① to ② and a minimum of 12 hours after the adjacent ① section has been poured.
5. The Contractor shall submit a Deck Pour Schedule to the Engineer for approval prior to placing concrete.

OPTIONAL DECK PLACING SEQUENCE
No Scale

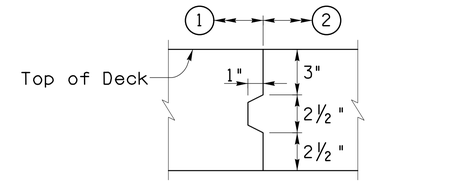

SECTION 1
No Scale

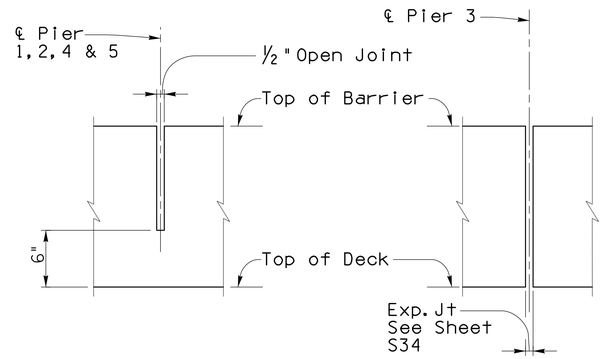

TYPICAL OPEN JOINT AT BARRIER
No Scale

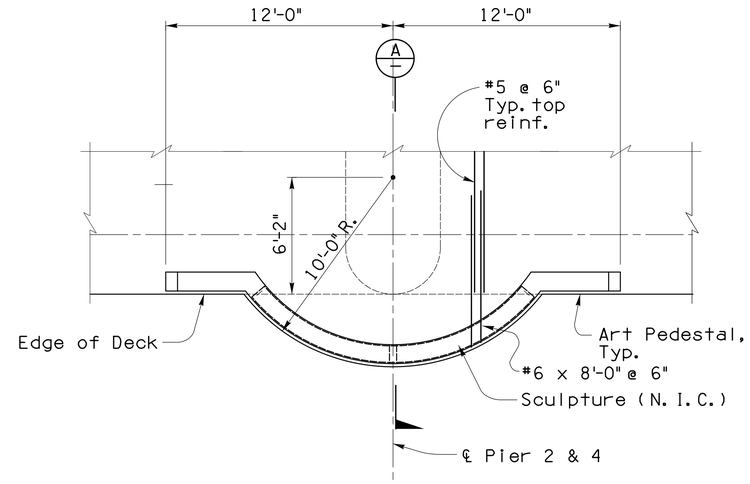

PLAN - SOUTH DECK EXTENSION 2 S42
¼" = 1'-0"

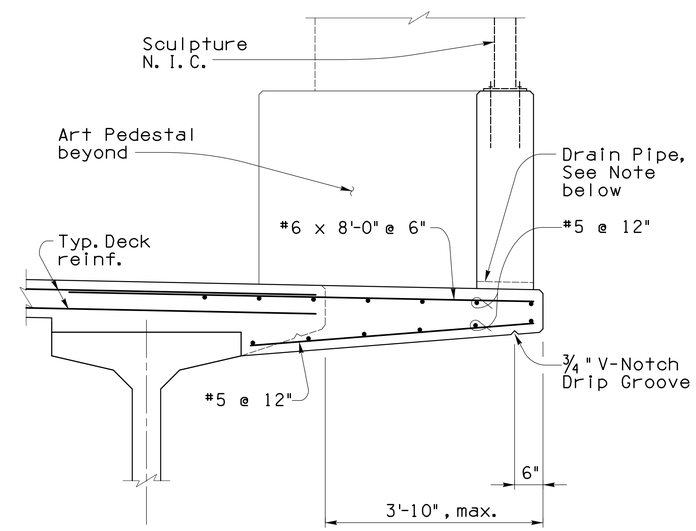

Note:
Provide a 1½" diameter drain pipe, centered on all deck extensions.

SECTION - SOUTH DECK EXTENSION A
¾" = 1'-0"

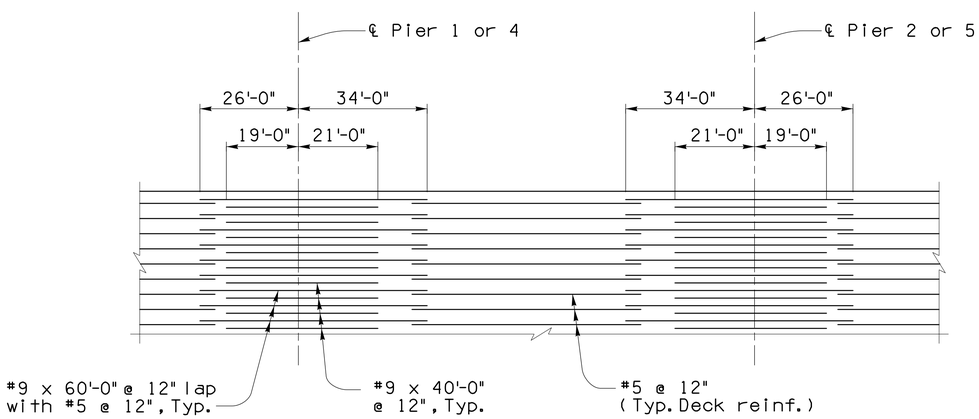

TOP LONGITUDINAL DECK REINF.
No Scale

Priscilla S. Cornelio, P.E., Director

Designed	JAM	11/15
Drawn	JHS, NJL	11/15
Checked	CGP	11/15
Proj. Engr.	JAM	11/15

No.	Revision Description	Engineer	Date

Structural Grace, Inc
1430 E. Fort Lowell Rd., Ste. 200, Tucson, AZ 85719 (520) 320-0156

Call at least two full working days before you begin excavation.
ARIZONA 811
Arizona Blue Stake, Inc.
Dial 8-1-1 or 1-800-STAKE-IT (782-5348)
In Santiago County: (602) 263-1100

Pima County Department of Transportation

TYPICAL DECK DETAILS
SUNSET ROAD - SEGMENT 1
SILVERBELL RD. TO I-10
PROJECT NO. 4RTSUN

SUNSET ROAD - SILVERBELL ROAD TO I-10 - PROJECT NO. 4RTSUN

Scale:	As Noted	Sheet S24 of S43	Page 93 of 203

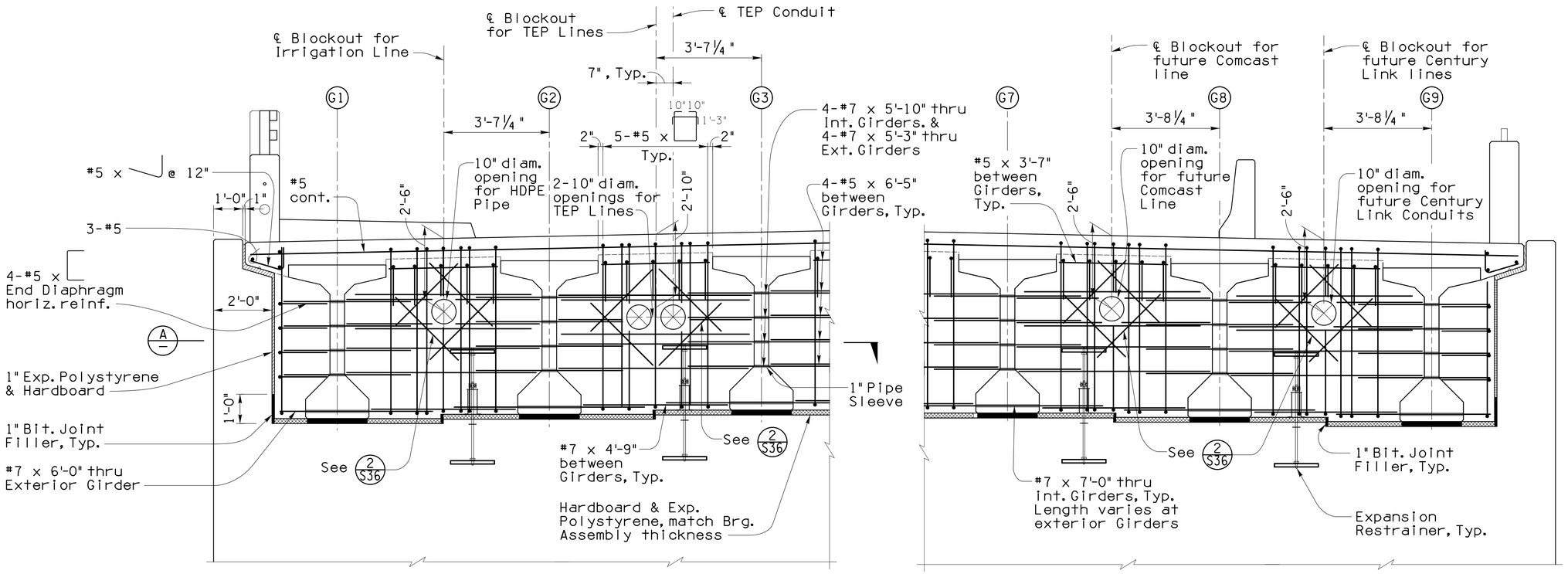

Note: Abutment 2 shown, Abutment 1 similar.

ELEVATION - ABUTMENT DIAPHRAGM

½" = 1'-0"

Note:
Class S concrete may be used for the Abutment Diaphragms.

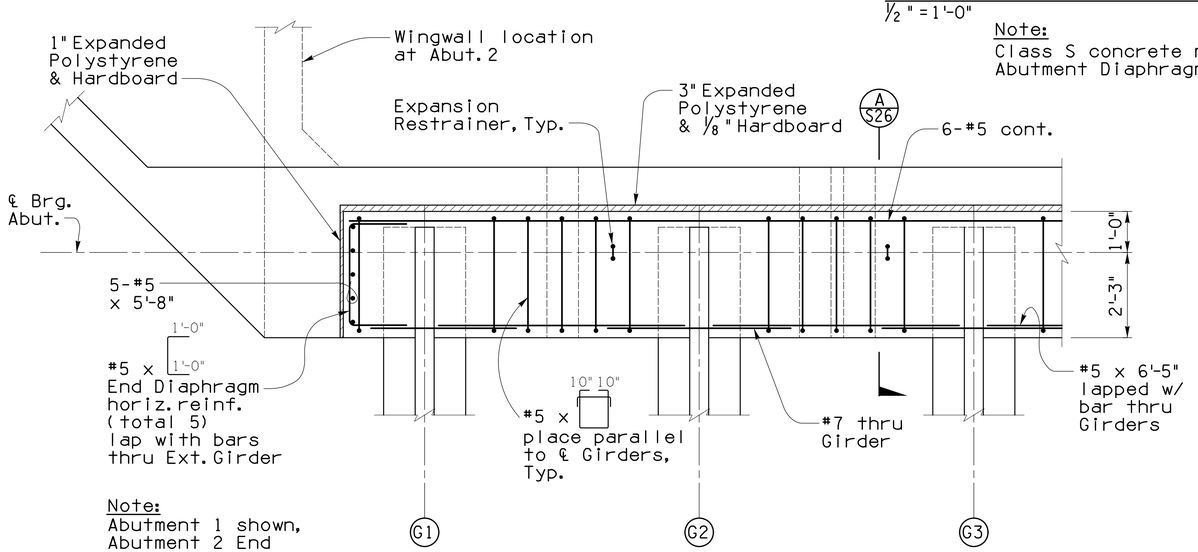

Note:
Abutment 1 shown, Abutment 2 End Diaphragm similar.

SECTION - ABUTMENT DIAPHRAGM

A

½" = 1'-0"

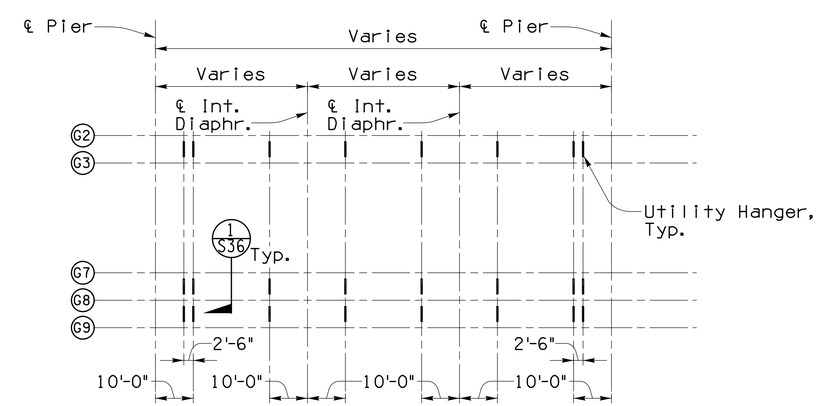

Notes:

1. Utility Hanger located typically per span between girder lines G9, G8, G7 and G2, G3.
2. Coordinate Utility Hanger placement with deck reinforcing.

UNISTRUT LOCATIONS - PARTIAL PLAN VIEW

1 S22

No Scale

Priscilla S. Cornello, P.E., Director

			Date
Designed	JAM		11/15
Drawn	JHS, NJL		11/15
Checked	CGP		11/15
Proj. Engr.	JAM		11/15

No.	Revision Description	Engineer	Date

Structural Grace, Inc
1331 E. Fort Lowell Rd., Ste. 200, Tucson, AZ 85719 (520) 320-0156

Call at least two full working days before you begin excavation. ARIZONA 811 Arizona Blue Stake, Inc. Dial 8-1-1 or 1-800-STAKE IT (782-5348) In Maricopa County: (602) 263-1100

Pima County Department of Transportation

ABUTMENT DIAPHRAGM
SUNSET ROAD - SEGMENT 1
SILVERBELL RD. TO I-10

PROJECT NO. 4RTSUN

SUNSET ROAD - SILVERBELL ROAD TO I-10 - PROJECT NO. 4RTSUN

Scale:	As Noted	Sheet S25 of S43	Page 94 of 203

FILE NAME: W:\Jobs\2013\1326_Sunset\1326_Working\1326_Sunset_S25_AFI.dgn DATE: 11/16/2015 TIME: 4:33:14 PM MLichtenstein

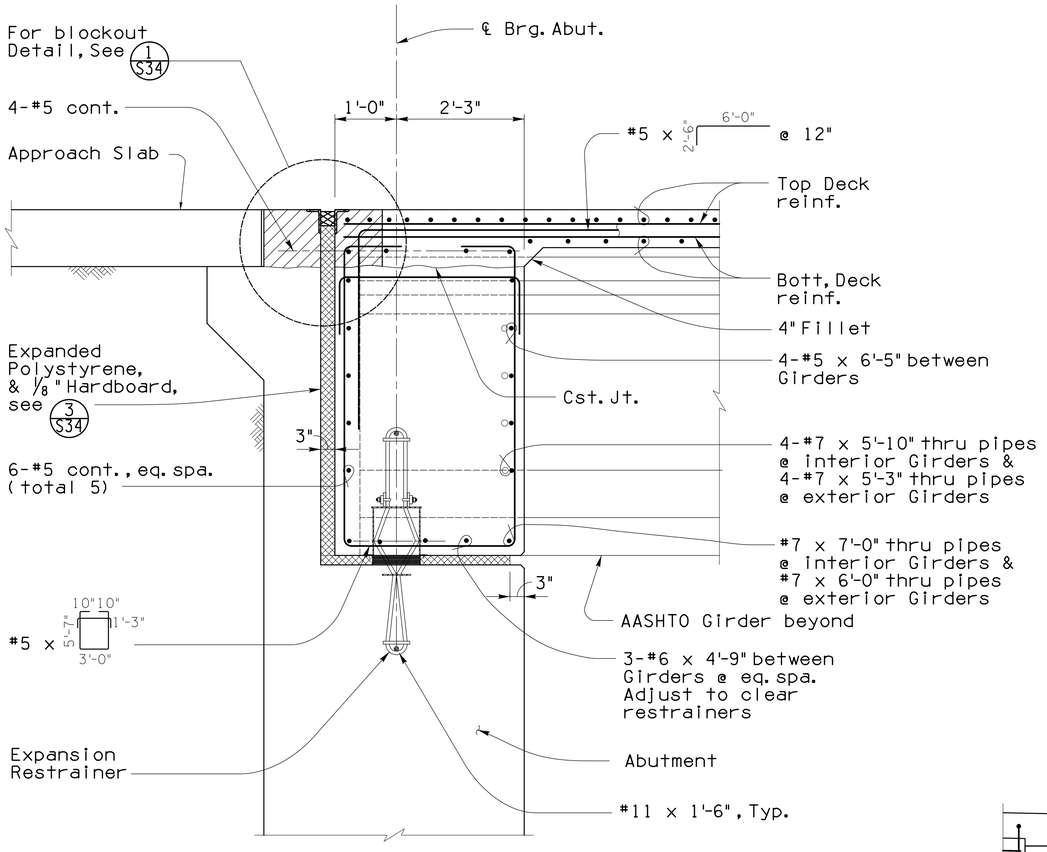

SECTION AT ABUT. DIAPHRAGM (A/S25)
3/4" = 1'-0"

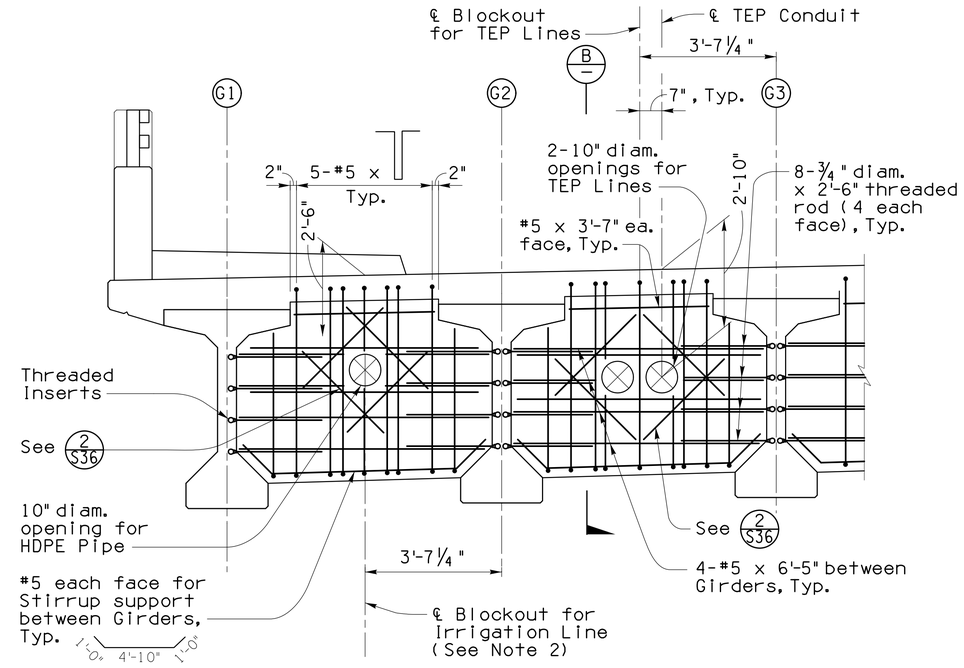

ELEVATION - INTERMEDIATE DIAPHRAGM
1/2" = 1'-0"

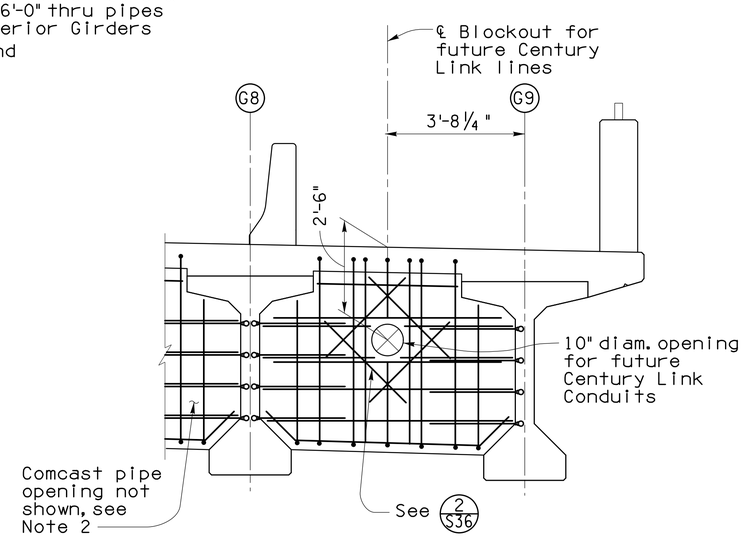

ELEVATION - INT. DIAPHRAGM
1/2" = 1'-0"

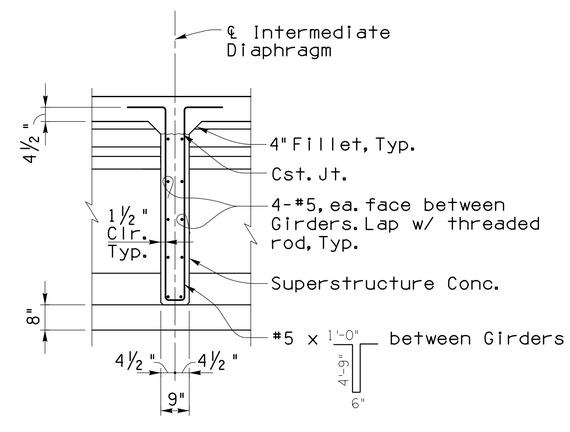

SECTION (B/—)
1/2" = 1'-0"

Notes:

1. Class S concrete may be used for the Abutment Diaphragms and Intermediate Diaphragms.
2. Provide a similar opening between Girders G7 & G8 for future Comcast utility. ℄ of opening shall be 3'-8 1/4" from ℄ Girder G8.

Priscilla S. Cornello, P.E., Director

Designed	JAM	11/15
Drawn	JHS, NJL	11/15
Checked	CGP	11/15
Proj. Engr.	JAM	11/15

No.	Revision Description	Engineer	Date

Structural Grace, Inc
1131 E. Fort Lowell Rd., Ste. 200, Tucson, AZ 85719 (520) 320-0156

Call at least two full working days before you begin excavation. Arizona Blue Stake, Inc. ARIZONA811 Dial 8-1-1 or 1-800-STAKE-IT (782-5348) In Maricopa County: (602) 263-1100

Pima County Department of Transportation

ABUT. & INT. DIAPHRAGM SECTIONS
SUNSET ROAD - SEGMENT 1
SILVERBELL RD. TO I-10

PROJECT NO. 4RTSUN

SUNSET ROAD - SILVERBELL ROAD TO I-10 - PROJECT NO. 4RTSUN

Scale:	As Noted	Sheet S26 of S43	Page 95 of 203

FILE NAME: W:\Jobs\2013\1326_Sunset\1326_Working\1326_Sunset_S26_PF1.dgn DATE: 11/16/2015 TIME: 4:33:14 PM MLichtenstein

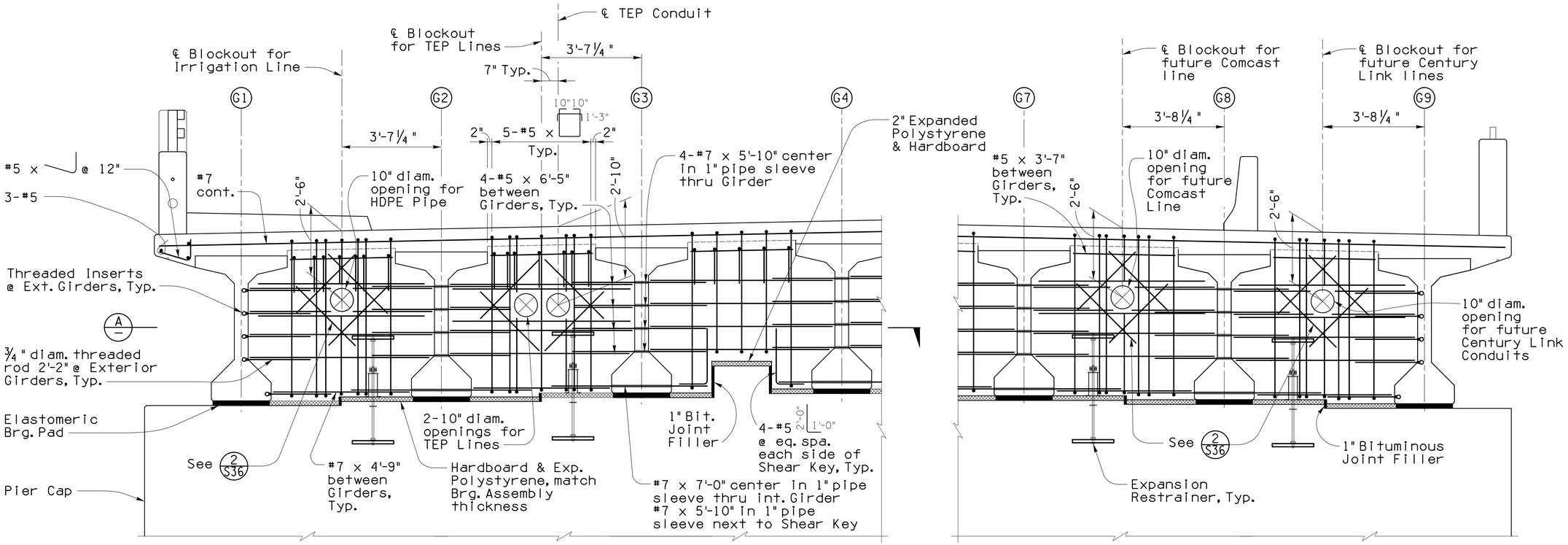

ELEVATION - PIERS 1 & 5 DIAPHRAGM
½" = 1'-0"

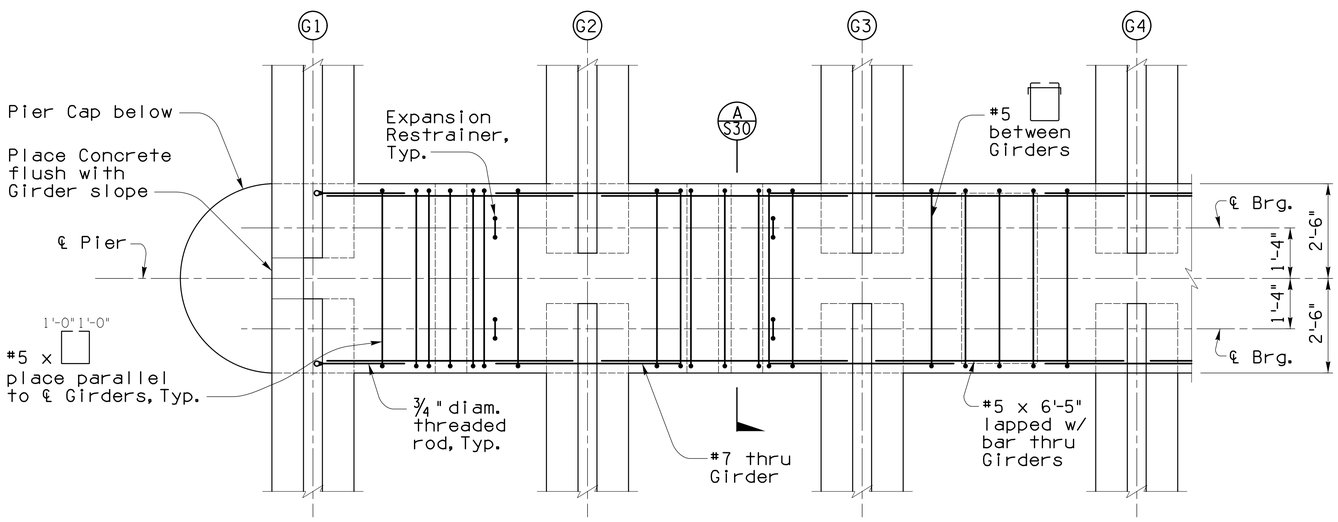

SECTION - PIERS 1 & 5 DIAPHRAGM
½" = 1'-0"
A

Notes:

1. Class S concrete may be used for Pier 1 & 5 Diaphragms.
2. Min lap length of bar splices shall be: #7 bars 2'-5"

Priscilla S. Cornelio, P.E., Director

Designed	JAM	Date 11/15
Drawn	JHS, NJL	11/15
Checked	CGP	11/15
Proj. Engr.	JAM	11/15

No.	Revision Description	Engineer	Date

Structural Grace, Inc
1131 E. Fort Lowell Rd., Ste. 200, Tucson, AZ 85719 (520) 320-0156

Call at least two full working days before you begin excavation. Arizona Blue Stake, Inc. ARIZONA811 Dial 8-1-1 or 1-800-STAKE-IT (782-5348) In Maricopa County: (602) 263-1100

Pima County Department of Transportation

PIERS 1 & 5 DIAPHRAGM
SUNSET ROAD - SEGMENT 1
SILVERBELL RD. TO I-10
PROJECT NO. 4RTSUN

SUNSET ROAD - SILVERBELL ROAD TO I-10 - PROJECT NO. 4RTSUN

Scale:	As Noted	Sheet S27 of S43	Page 96 of 203

FILE NAME: W:\Jobs\2013\1326_Sunset\1326_Working\1326_Sunset_S27_PF5.dgn DATE: 11/16/2015 TIME: 4:33:14 PM MLichtenstein

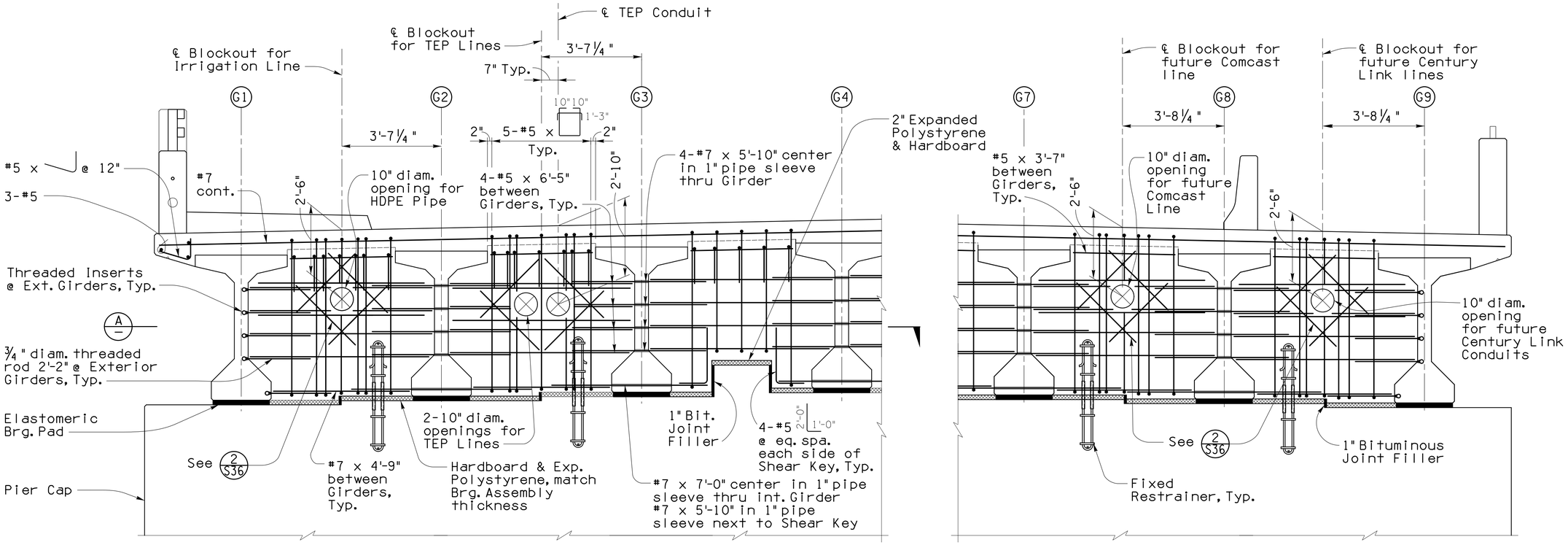

ELEVATION - PIERS 2 & 4 DIAPHRAGM
½" = 1'-0"

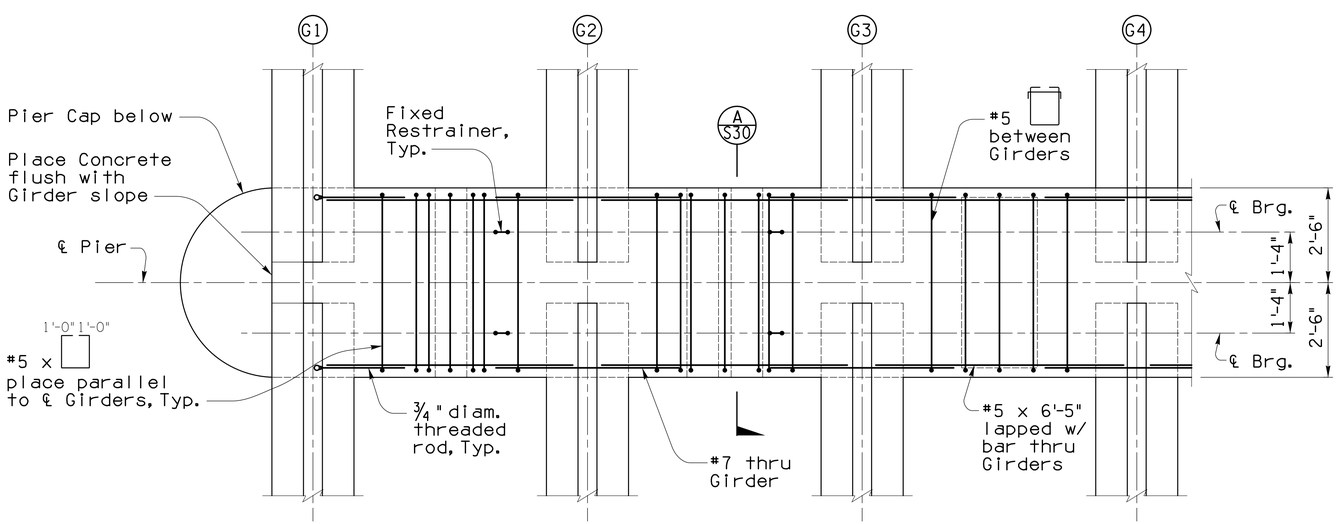

SECTION - PIERS 2 & 4 DIAPHRAGM
½" = 1'-0"
A

Notes:

1. Min lap length of bar splices shall be: #7 bars 2'-5"

Priscilla S. Cornello, P.E., Director

Designed	JAM	Date 11/15
Drawn	JHS, NJL	11/15
Checked	CGP	11/15
Proj. Engr.	JAM	11/15

No.	Revision Description	Engineer	Date

Structural Grace, Inc
1131 E. Fort Lowell Rd., Ste. 200, Tucson, AZ 85719 (520) 320-0156

Call at least two full working days before you begin excavation. Arizona Blue Stake, Inc. ARIZONA811 Dial 8-1-1 or 1-800-STAKE-IT (782-5348) In Maricopa County: (602) 263-1100

Pima County Department of Transportation

PIERS 2 & 4 DIAPHRAGM
SUNSET ROAD - SEGMENT 1
SILVERBELL RD. TO I-10

PROJECT NO. 4RTSUN

SUNSET ROAD - SILVERBELL ROAD TO I-10 - PROJECT NO. 4RTSUN

Scale:	As Noted	Sheet S28 of S43	Page 97 of 203

FILE NAME: W:\Jobs\2013\1326_Sunset\1326_Working\1326_Sunset_S28_PF2.dgn DATE: 11/16/2015 TIME: 4:33:15 PM MLichtenstein

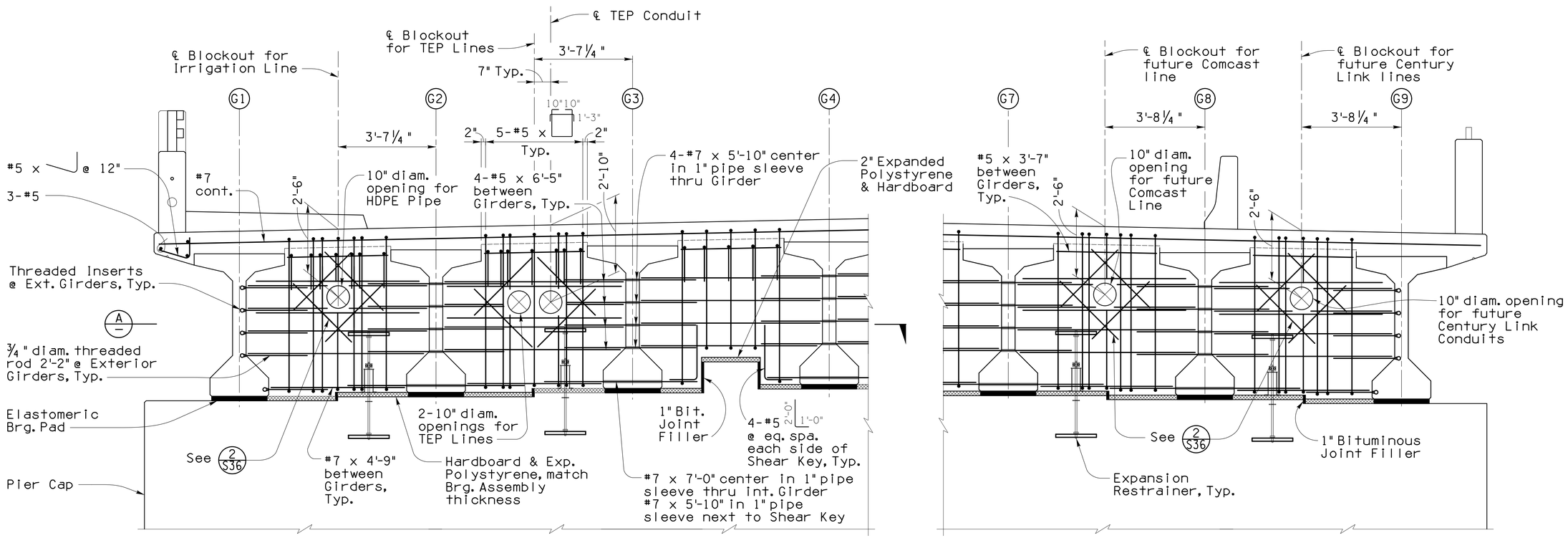

ELEVATION - PIER 3 DIAPHRAGM
½" = 1'-0"

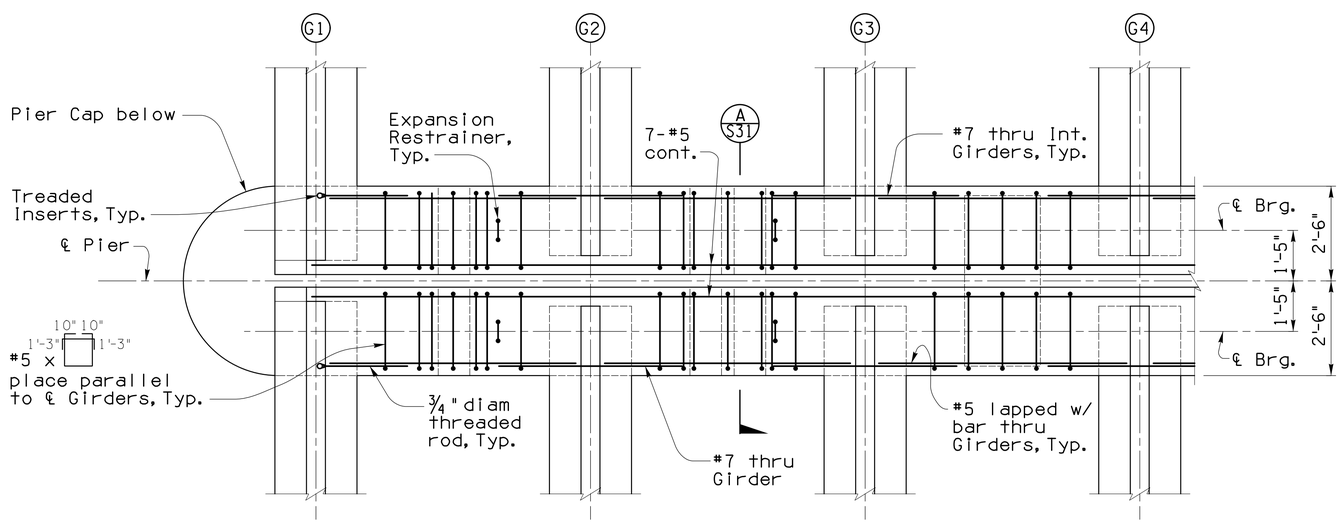

SECTION - PIER 3 DIAPHRAGM
½" = 1'-0"
A

Notes:

1. Min lap length of bar splices shall be: #7 bars 2'-5"

Priscilla S. Cornello, P.E., Director

Designed	JAM	11/15
Drawn	JHS, NJL	11/15
Checked	CGP	11/15
Proj. Engr.	JAM	11/15

No.	Revision Description	Engineer	Date

Structural Grace, Inc
14313 East Lowell Rd., Ste. 200, Tucson, AZ 85719 (520) 1304516

Call us least two full working days before you begin excavation
Arizona Blue Stake, Inc.
Dial 8-1-1 or 1-800-STAKE-IT (782-5348)
In Maricopa County: (602) 263-1100

Pima County Department of Transportation

PIER 3 DIAPHRAGM
SUNSET ROAD - SEGMENT 1
SILVERBELL RD. TO I-10

PROJECT NO. 4RTSUN

SUNSET ROAD - SILVERBELL ROAD TO I-10 - PROJECT NO. 4RTSUN

Scale:	As Noted	Sheet S29 of S43	Page 98 of 203

FILE NAME: W:\Jobs\2013\1326_Sunset\1326_Working\1326_Sunset_S29_PF3.dgn DATE: 11/16/2015 TIME: 4:33:15 PM MLichtenstein

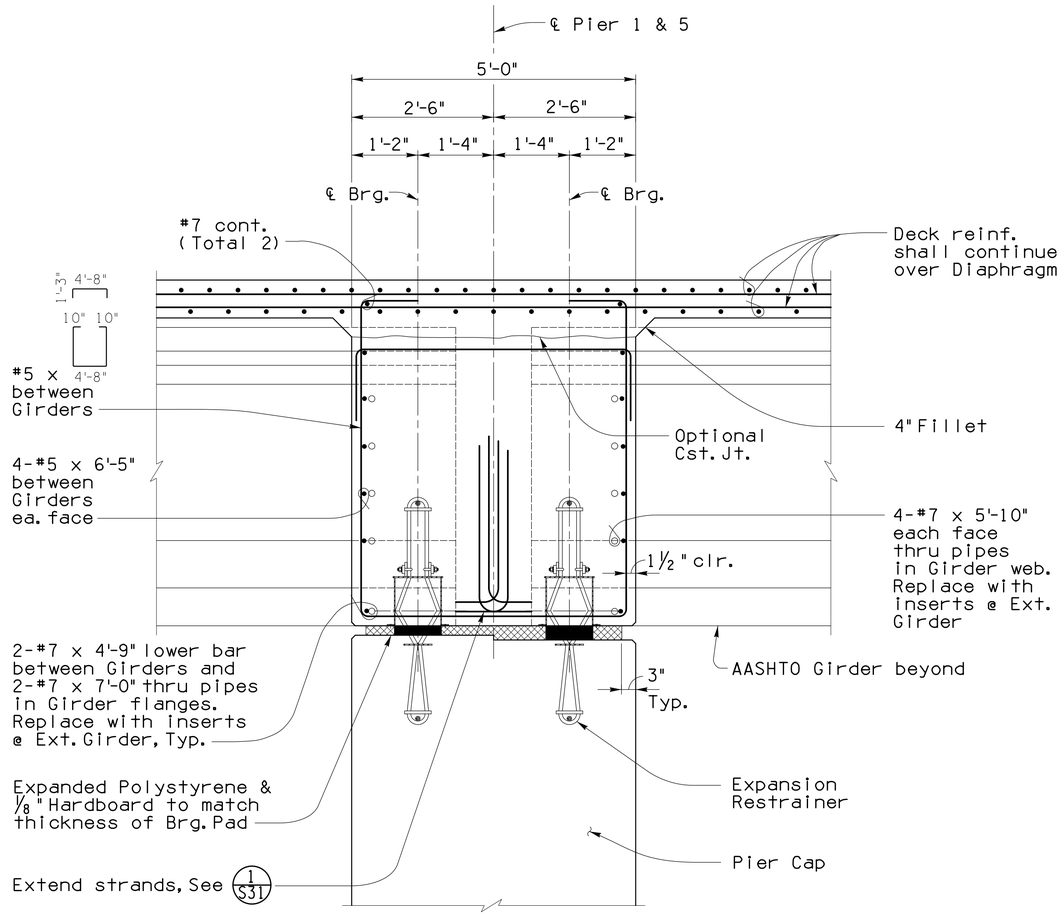

SECTION AT PIERS 1 & 5 (A/S26)
¾" = 1'-0"

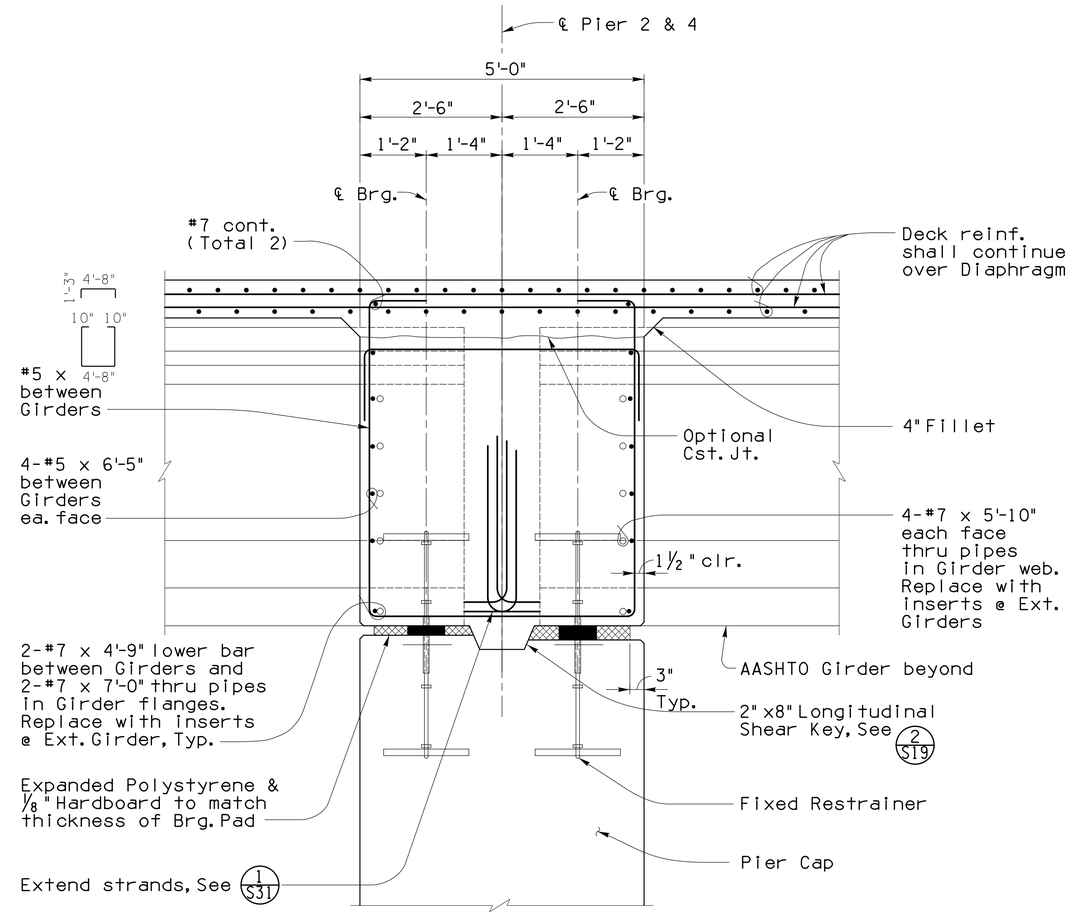

SECTION AT PIERS 2 & 4 (B/S31)
¾" = 1'-0"

Notes:

1. If pier diaphragm is poured concurrently with deck, Class 'X' concrete shall be used.
2. Class 'S' concrete may be used for Piers 1 & 5 Diaphragms.

Priscilla S. Cornelio, P.E., Director

			Date
Designed	JAM		11/15
Drawn	JHS, MJL		11/15
Checked	CGP		11/15
Proj. Engr.	JAM		11/15

No.	Revision Description	Engineer	Date

Pima County Department of Transportation

Call at least two full working days before you begin excavation. ARIZONA 811 Arizona Blue Stake, Inc. Dial 8-1-1 or 1-800-STAKE-IT (782-5348) In Maricopa County: (602) 263-1100

PIER DIAPHRAGM SECTIONS - 1 OF 2
SUNSET ROAD - SEGMENT 1
SILVERBELL RD. TO I-10
PROJECT NO. 4RTSUN

SUNSET ROAD - SILVERBELL ROAD TO I-10 - PROJECT NO. 4RTSUN

Scale: As Noted | Sheet S30 of S43 | Page 99 of 203

FILE NAME: W:\Jobs\2013\1326_Sunset\1326_Working\1326_Sunset_S30_PF4.dgn DATE: 11/16/2015 TIME: 4:33:16 PM MLichtenstein

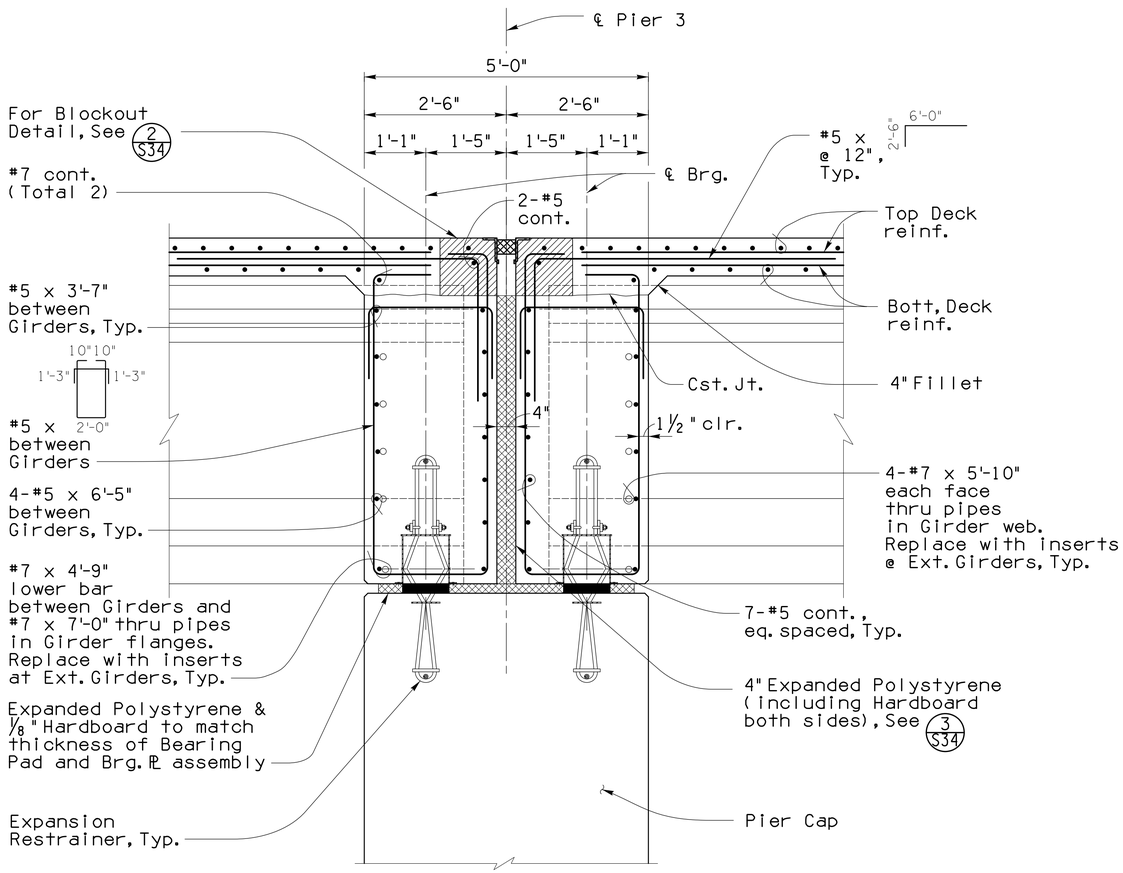

Note: Class 'S' concrete might be used for Pier 3 Diaphragm.

SECTION AT PIER 3 (A/S29)
3/4" = 1'-0"

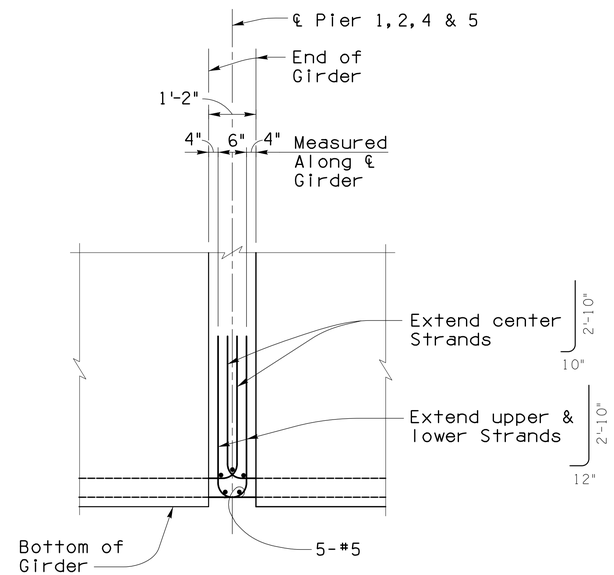

SECTION - STRAND EXTENSION DETAIL (1/S30)
1" = 1'-0"

Priscilla S. Cornelio, P.E., Director

Designed	JAM	11/15
Drawn	JHS, NJL	11/15
Checked	CGP	11/15
Proj. Engr.	JAM	11/15

No.	Revision Description	Engineer	Date

Structural Grace, Inc
1121 E. Fort Lowell Rd., Ste. 200, Tucson, AZ 85719 (520) 320-0156

Call at least two full working days before you begin excavation. ARIZONA 811 Arizona Blue Stake, Inc. Dial 8-1-1 or 1-800-STAKE-IT (782-5348) In Maricopa County: (602) 263-1100

Pima County Department of Transportation

PIER DIAPHRAGM SECTIONS - 2 OF 2
SUNSET ROAD - SEGMENT 1
SILVERBELL RD. TO I-10

PROJECT NO. 4RTSUN

SUNSET ROAD - SILVERBELL ROAD TO I-10 - PROJECT NO. 4RTSUN

Scale:	As Noted	Sheet S31 of S43	Page 100 of 203

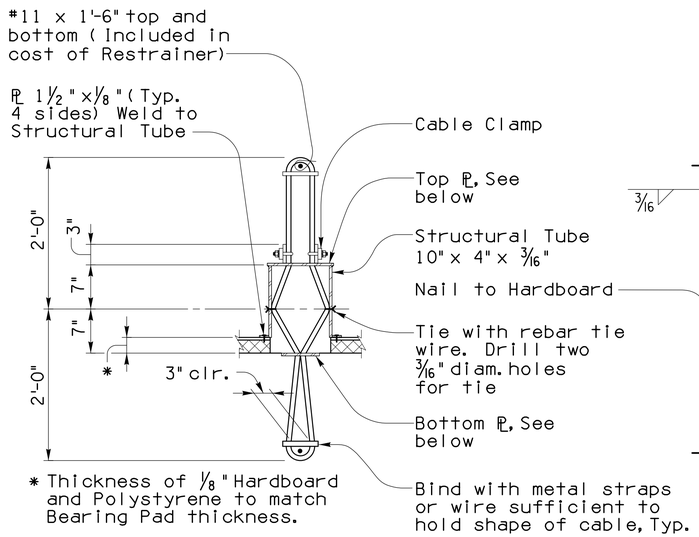

ELEVATION

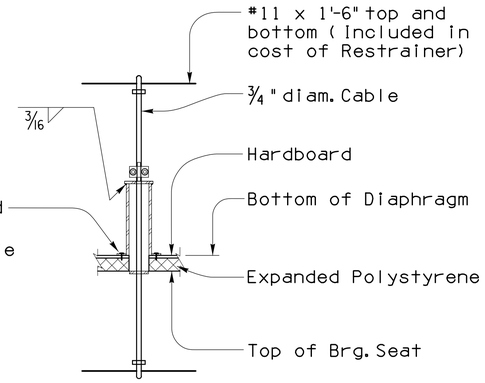

SECTION

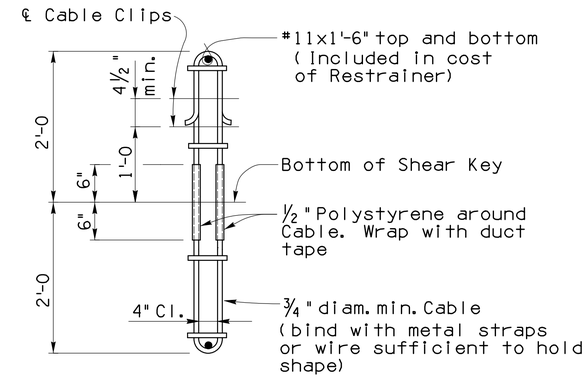

FIXED RESTRAINER DETAIL (TOTAL 28) (2/S17)

No Scale

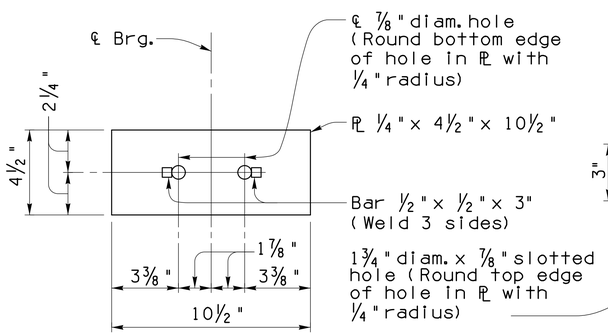

TOP PLATE

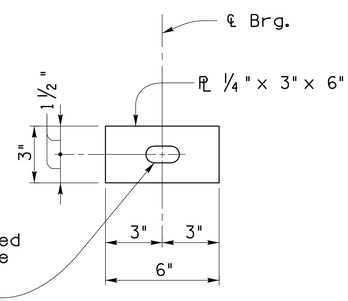

BOTTOM PLATE

EXPANSION RESTRAINER DETAIL (TOTAL 64) (1/S11) (1/S16)

No Scale

Notes:

1. Seal all openings in structural tube to prohibit concrete intrusion.
2. Restrainer cables shall be ¾" diam. preformed 6x19 galvanized cable. The expansion and fixed restrainer assembly shall have a minimum breaking strength of 42 kips. One Expansion Restrainer assembly and one Fixed Restrainer assembly shall be furnished to the Engineer for testing.
3. For additional information not shown or noted, see Standard Specifications.
4. The cost of Vertical Earthquake Restrainers is incidental to other items of work.

Pima County Department of Transportation

Priscilla S. Cornelio, P.E., Director

Designed	JAM	11/15
Drawn	JHS, NJL	11/15
Checked	CGP	11/15
Proj. Engr.	JAM	11/15

No.	Revision Description	Engineer	Date

Structural Grace, Inc
1431 E. Fort Lowell Rd., Ste. 200, Tucson, AZ 85719 (520) 320-0156

Call at least two full working days before you begin excavation. ARIZONA811 Arizona Blue Stake, Inc. Dial 8-1-1 or 1-800-STAKE IT (782-5348) In Maricopa County: (602) 263-1100

MISCELLANEOUS DETAILS - 1 OF 5
SUNSET ROAD - SEGMENT 1
SILVERBELL RD. TO I-10

PROJECT NO. 4RTSUN

SUNSET ROAD - SILVERBELL ROAD TO I-10 - PROJECT NO. 4RTSUN

Scale:	As Noted	Sheet S32 of S43	Page 101 of 203

FILE NAME: W:\Jobs\2013\1326_Sunset\1326_Working\1326_Sunset_S32_MD1.dgn DATE: 11/16/2015 TIME: 4:33:16 PM MLichtenstein

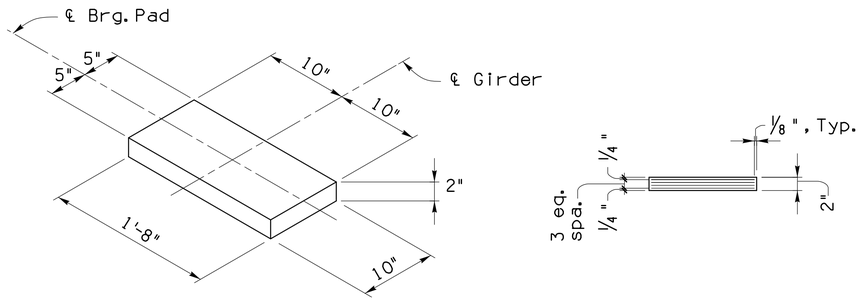

ABUTMENT 1 & 2 ELASTOMERIC BEARING PAD DETAIL (TOTAL 18) (1/S09) (1/S10)
No Scale

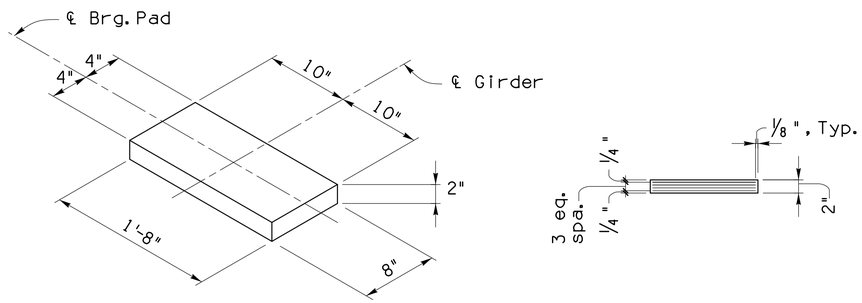

PIERS 2 & 4 ELASTOMERIC BEARING PAD DETAIL (TOTAL 36) (2/S17)
No Scale

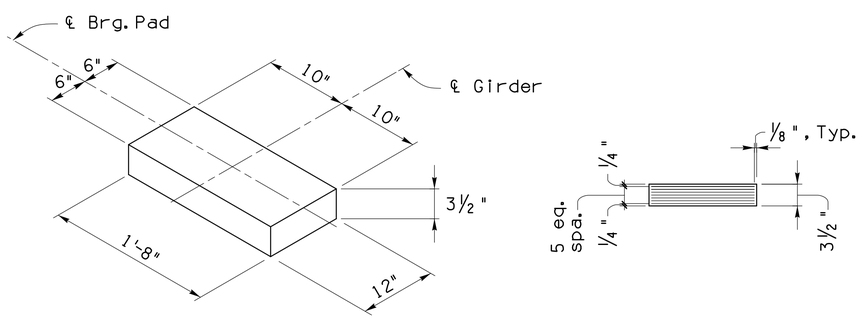

PIERS 1, 3 & 5 ELASTOMERIC BEARING PAD DETAIL (TOTAL 54) (3/S16)
No Scale

ELASTOMERIC BEARING PAD DATA			
Location	Abut. 1 & 2	Pier 2 & 4	Pier 1, 3 & 5
Dead Load (Service)	152k	148k	148k
Dead Load + Live Loads (Service)	233k	170k	228k

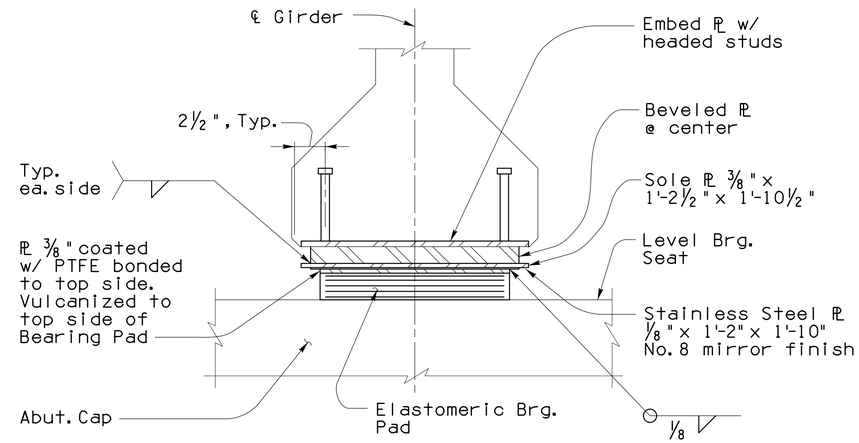

SLIDING BEARING PLATE ASSEMBLY DETAIL (ABUT. 1 & 2) (A/—)
1 1/2" = 1'-0"

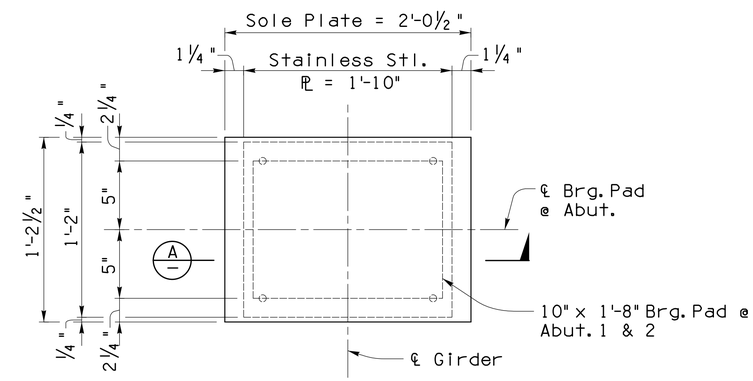

SOLE PLATE PLAN
1 1/2" = 1'-0"

Elastomeric Bearing Pad Notes:

1. Elastomeric Brg. Pad shall conform to the current edition of the AASHTO LRFD Bridge Construction Specifications, Section 18.
2. Internal Steel Laminates shall be 14 ga. rolled mild steel per ASTM A570, Grade 36 where Steel Laminates are indicated.
3. Elastomeric Bearing Pad Design Criteria:

   Design Method: A
   Low Temperature Zone: A
   Elastomer Grade: 0
   Shear Modulus: 130 psi
   Durometer Hardness: 55

4. Abutment Brg. Pad shall have a 3/8" polytetrafluorethylene (PTFE) coated plate vulcanized to the top side of the Bearing Pad (@ Abutments only). PTFE coefficient of friction shall be 0.07 at 1000 psi bearing pressure.
5. The cost of Elastomeric Bearing Pads & Bearing Plate assemblies is incidental to other items of work.

Priscilla S. Cornello, P.E., Director

Designed	JAM	11/15
Drawn	JHS, NJL	11/15
Checked	CGP	11/15
Proj. Engr.	JAM	11/15

No.	Revision Description	Engineer	Date

Structural Grace, Inc
1331 E. Fort Lowell Rd., Ste. 200, Tucson, AZ 85719 (520) 320-0156

Call at least two full working days before you begin excavation. Arizona Blue Stake, Inc. ARIZONA811 Dial 8-1-1 or 1-800-STAKE-IT (782-5348) In Maricopa County: (602) 263-1100

Pima County Department of Transportation

MISCELLANEOUS DETAILS - 2 OF 5
SUNSET ROAD - SEGMENT 1
SILVERBELL RD. TO I-10
PROJECT NO. 4RTSUN

SUNSET ROAD - SILVERBELL ROAD TO I-10 - PROJECT NO. 4RTSUN

Scale:	As Noted	Sheet S33 of S43	Page 102 of 203

FILE NAME: W:\Jobs\2013\1326_Sunset\1326_Working\1326_Sunset_S33_MD2.dgn DATE: 11/16/2015 TIME: 4:33:17 PM MLichtenstein

Notes:

1. *Deck Joint Assembly to be installed with a secondary pour. Contractor to verify width and depth of the req'd. blockout. Concrete strength shall be 4500 psi. Hatch area denotes secondary closure pour for joint.
2. Contractor may pour the expansion joint assembly with the deck pour with the approval of the Engineer.

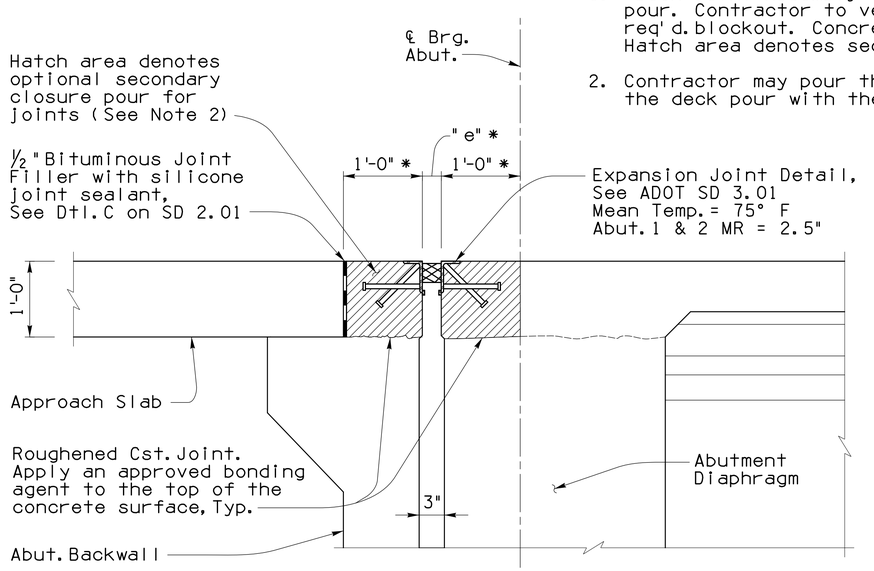

ABUTMENT DECK JOINT ASSEMBLY DETAIL (1 / S26)
No Scale

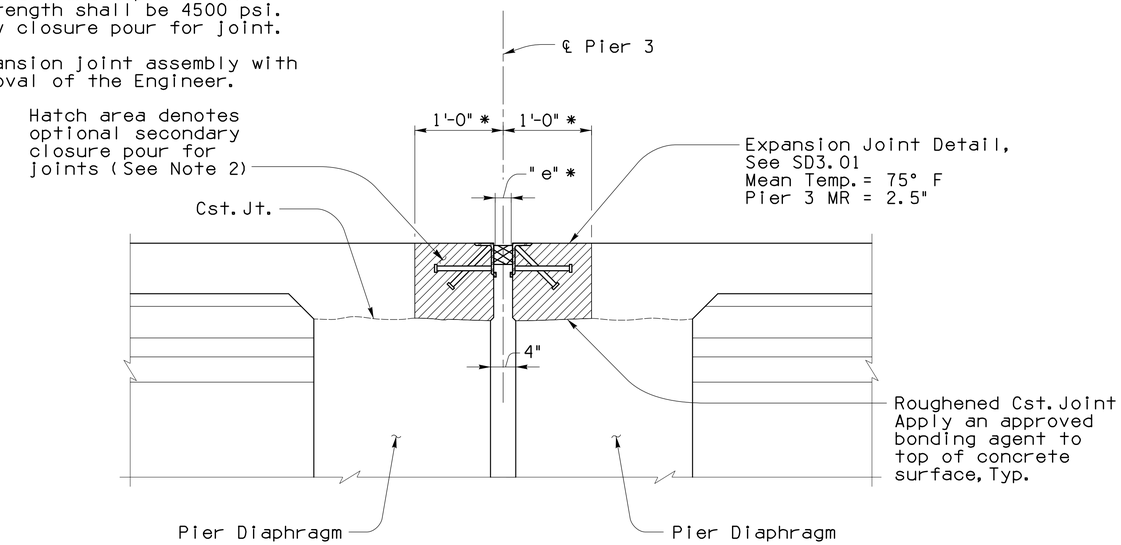

PIER 3 EXPANSION JOINT DETAIL (2 / S31)
No Scale

EXPANSION JOINT DETAIL								
Temp (°F)	105	95	85	75**	65	55	45	35
e* (inch), Abut. 1 & 2	2.48	2.66	2.83	3.00	3.17	3.34	3.52	3.69
e* (inch), Pier 3	2.74	2.83	2.91	3.00	3.09	3.17	3.26	3.35

* Perpendicular to ℄ Brg.
** Mean Temperature

Notes:

1. Contractor to provide a 5" x 5" elastomeric compression seal deck joint assembly with a Movement Rating = 2½" @ Abutments 1 & 2 and Pier 3 over the bridge roadway width and a cover plate over the bridge sidewalks and multi-use path.
2. Polychloroprene joint seal shall be delivered and field installed in one piece. Splicing shall not be allowed and joint seals shall not be installed until after the closure pour concrete has set.
3. The Contractor shall take due care in the placement of the concrete under the steel joint elements to ensure that proper consolidation is achieved. After placement, the Engineer shall inspect the joint for voids by sounding the angle with a hammer. All voids shall be repaired by the Contractor by epoxy injection. The repair plan shall be approved by the Engineer prior to commencing work. Repairs shall be at no cost to the Department.
4. Joint opening shall be adjusted according to the Mean Temperature Correction Table.
5. For cover plate detail see ADOT Standard Dwg. SD 3.01.
6. Contractor shall submit complete shop drawings for Engineers approval prior to fabrication.
7. Cost of cover plate shall be included in linear foot cost of expansion joint.

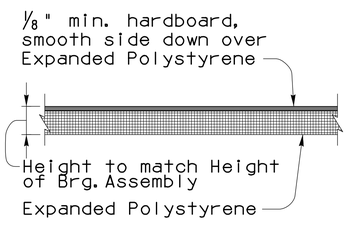

Protection of Horizontal Polystyrene

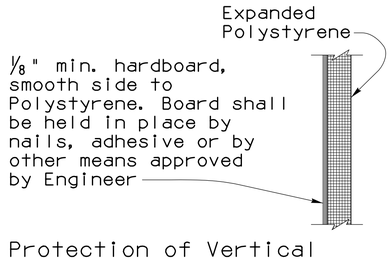

Protection of Vertical Polystyrene

Note:
Hardboard to be used on any polystyrene face against which concrete is to be placed.

POLYSTYRENE PROTECTION DETAIL (3/S12, 3/S13, 3/S16, 3/S17, 3/S26, 3/S31)
No Scale

Priscilla S. Cornello, P.E., Director

Designed	JAM	Date 11/15
Drawn	JHS, NJL	11/15
Checked	CGP	11/15
Proj. Engr.	JAM	11/15

No.	Revision Description	Engineer	Date

Structural Grace, Inc
1131 E. Fort Lowell Rd., Ste. 200, Tucson, AZ 85719 (520) 320-0156

Call at least two full working days before you begin excavation. ARIZONA811 Arizona Blue Stake, Inc. Dial 8-1-1 or 1-800-STAKE-IT (782-5348) In Maricopa County: (602) 263-1100

Pima County Department of Transportation

MISCELLANEOUS DETAILS - 3 OF 5
SUNSET ROAD - SEGMENT 1
SILVERBELL RD. TO I-10
PROJECT NO. 4RTSUN

SUNSET ROAD - SILVERBELL ROAD TO I-10 - PROJECT NO. 4RTSUN

Scale:	As Noted	Sheet S34 of S43	Page 103 of 203

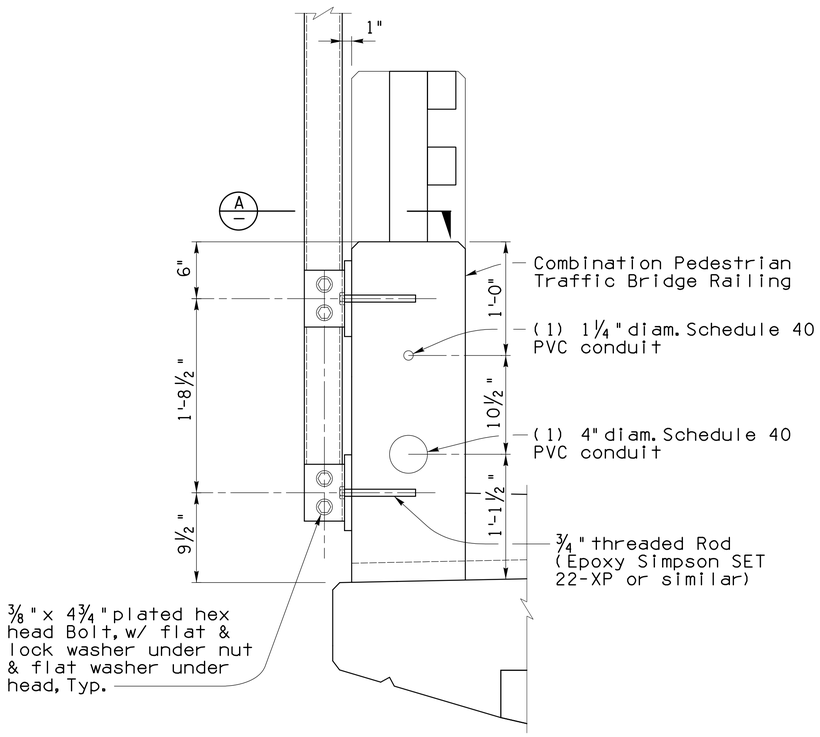

Note:
Connection at Combination Pedestrian Barrier shown, use similar connection at F-Shape Barrier

BRIDGE SIGN MOUNT ASSEMBLY SECTION
1½" = 1'-0"

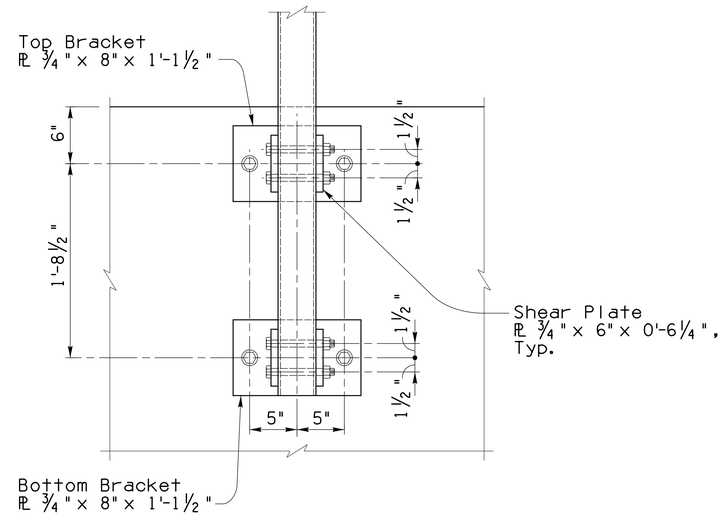

BRIDGE SIGN MOUNT ASSEMBLY ELEVATION
1½" = 1'-0"

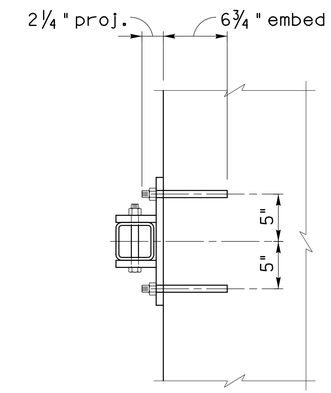

SECTION A
1½" = 1'-0"

Note:
1. Bottom of Sign shall be 9'-0" minimum from top of Deck/Sidewalk.
2. The Bridge sign mount assembly shall be paid under Bid Item No. 6061015, Bridge Sign Mount Assembly.
3. See S22 for Sign locations by Station.

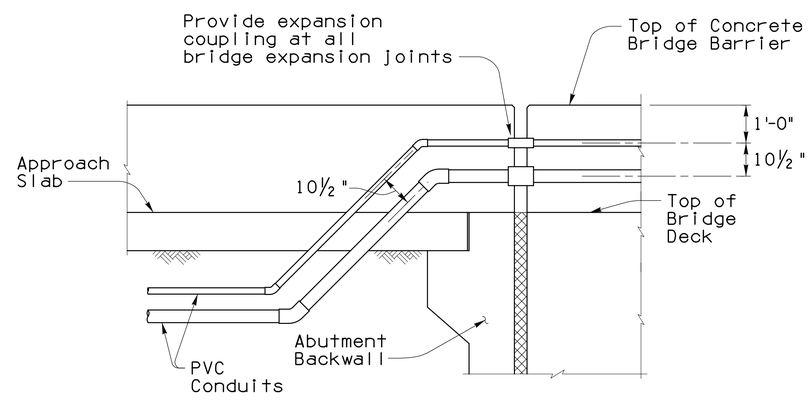

ELECTRICAL CONDUIT SWEEP DETAIL
½" = 1'-0"

Priscilla S. Cornelio, P.E., Director

Designed	JAM	11/15
Drawn	JHS, MJL	11/15
Checked	CGP	11/15
Proj. Engr.	JAM	11/15

No.	Revision Description	Engineer	Date

Structural Grace, Inc
1101 E. Fort Lowell Rd., Ste. 200, Tucson, AZ 85719 (520) 320-0156

Call at least two full working days before you begin excavation. ARIZONA 811 Arizona Blue Stake, Inc. Dial 8-1-1 or 1-800-STAKE-IT (782-5348) In Maricopa County: (602) 263-1100

Pima County Department of Transportation

MISCELLANEOUS DETAILS - 4 OF 5
SUNSET ROAD - SEGMENT 1
SILVERBELL RD. TO I-10

PROJECT NO. 4RTSUN

SUNSET ROAD - SILVERBELL ROAD TO I-10 - PROJECT NO. 4RTSUN

Scale:	As Noted	Sheet S35 of S43	Page 104 of 203

FILE NAME: W:\Jobs\2013\1326_Sunset\1326_Working\1326_Sunset_S35_MD4.dgn DATE: 11/16/2015 TIME: 4:33:18 PM MLichtenstein

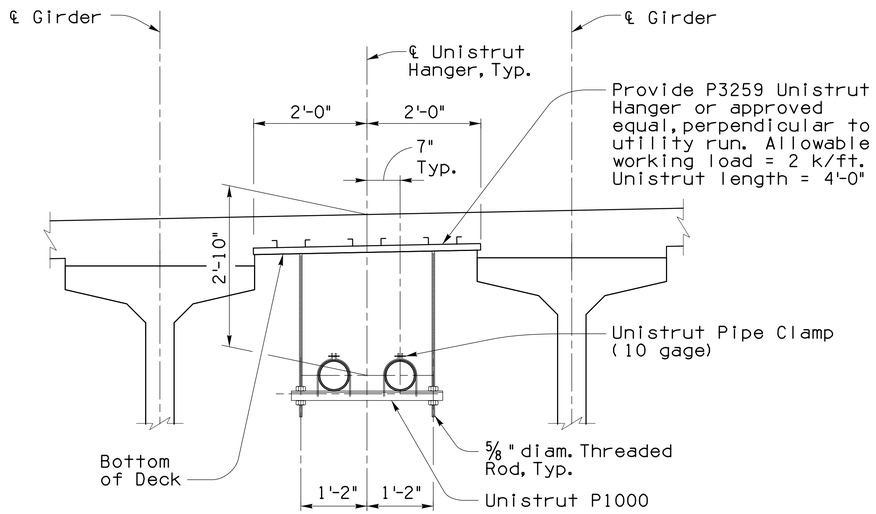

UTILITY HANGER DETAIL (1/S23) (1/S25)
3/4" = 1'-0"

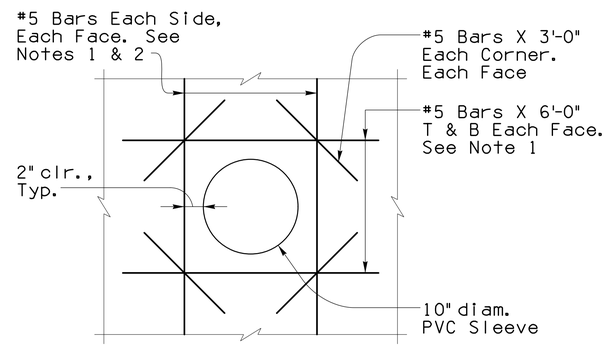

ELEVATION FOR SINGLE BLOCK-OUT

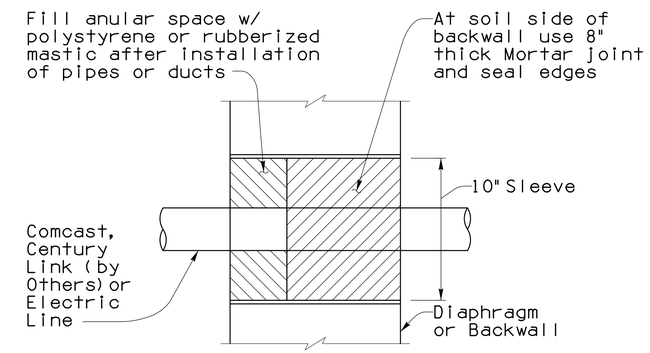

SECTION AT UTILITY LINE(S)

Hanger & Hanger Insert Notes:

1. Contractor shall provide & install Unistrut Hanger Inserts.
2. Contractor shall coordinate with utility companies for exact location of all hanger inserts before placement of bridge deck.
3. Where utility is to be placed in the Future, provide plug or sealer for protection
4. For Century Link, Comcast and TEP utilities, provide Unistrut P3259 hanger inserts not more than 10' away from face of abutment & pier diaphragm & 20-feet maximum spacing in between. Additional Unistrut Hangers shall be placed 2'-6" away from inserts closest to pier diaphragms for anchor hanger bracing rods. Bid Item No. 9230040.
5. Utility Hanger for TEP consists of Unistrut P1000, pipe clamps, threaded rods and ancillary hardware. Hanger to be placed between girders G2 & G3. Bid Item No. 9230080.

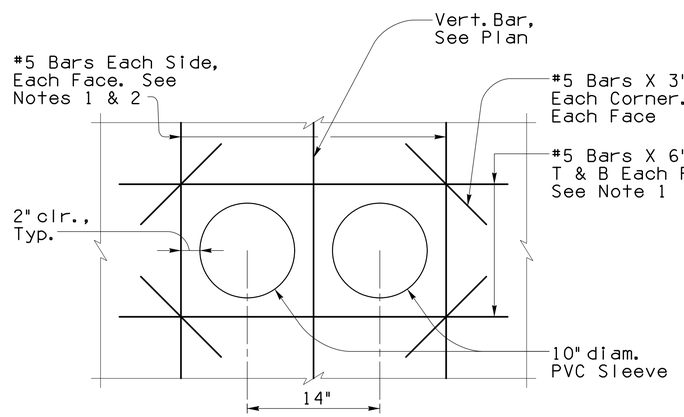

ELEVATION FOR DOUBLE BLOCK-OUT

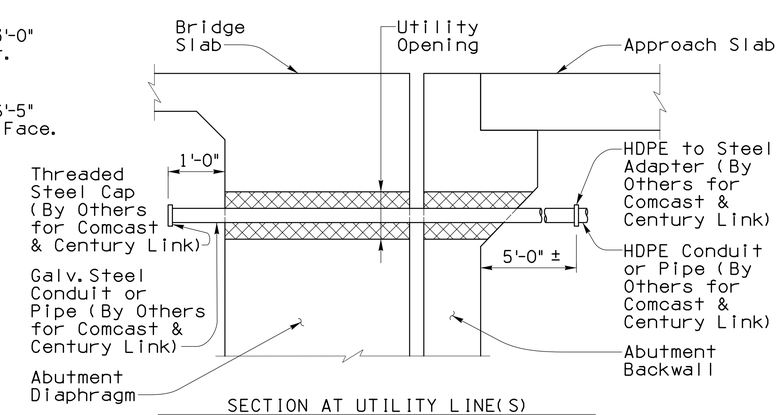

SECTION AT UTILITY LINE(S)
(BY OTHERS FOR COMCAST & CENTURY LINK)

Notes:

1. Area of add'l bars at ea. edge of block-out in ea. direcction shall match ½ the cross-sectional area of the interrupted bars. Min. of 1 bar req'd at ea. edge, ea. face.
2. Add'l vert. bars shall match shape and dimensions of cut verticals (such as ⊥).
3. PVC pipe sleeve openings shall be used at all end diaphragms and at the abutment backwalls.
4. The polystyrene or rubberized mastic shall be approved by the Engineer prior to placement.
5. Provide for conduit expansion couplings at each abutment and at piers 1, 3 & 5.
6. Provide for additional expansion couplings along the bridge length as recommended by the pipe manufacturer and utilities.
7. Polystyrene on rubberized mastic and mortar joint shall be incidental to the installation of the rigid conduit.

BLOCK-OUT DETAIL AT ABUTMENT BACKWALLS AND ALL DIAPHRAGMS
(BID ITEM NO. 9230040)
No Scale

(2/S25) (2/S26) (2/S27) (2/S28) (2/S29)

Priscilla S. Cornello, P.E., Director

Designed	JAM	11/15
Drawn	JHS, NJL	11/15
Checked	CGP	11/15
Proj. Engr.	JAM	11/15

No.	Revision Description	Engineer	Date

Structural Grace, Inc
1325 E. East Lowell Rd., Ste. 200, Tucson, AZ 85719 (520) 320-0516

Call us least two full working days before you begin excavation.
ARIZONA 811
Arizona Blue Stake, Inc.
Dial 8-1-1 or 1-800-STAKE-IT (782-5348)
In Maricopa County: (602) 263-1100

SUNSET ROAD - SILVERBELL ROAD TO I-10 - PROJECT NO. 4RTSUN

Pima County Department of Transportation

MISCELLANEOUS DETAILS - 5 OF 5
SUNSET ROAD - SEGMENT 1
SILVERBELL RD. TO I-10
PROJECT NO. 4RTSUN

Scale:	As Noted	Sheet S36 of S43	Page 105 of 203

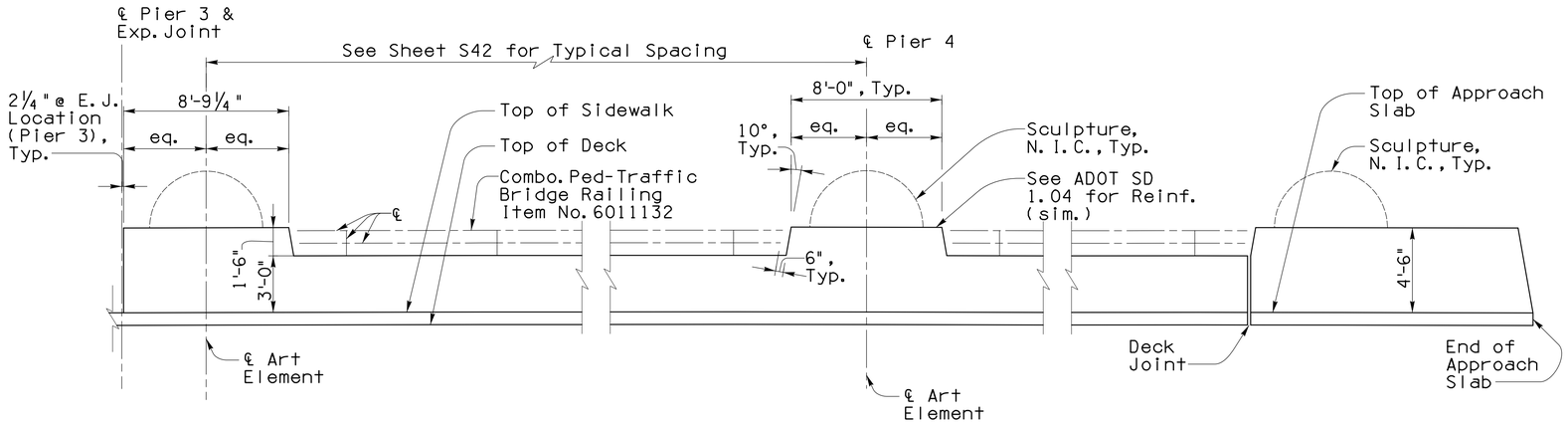

NORTH PEDESTALS - TYPICAL
¼" = 1'-0"

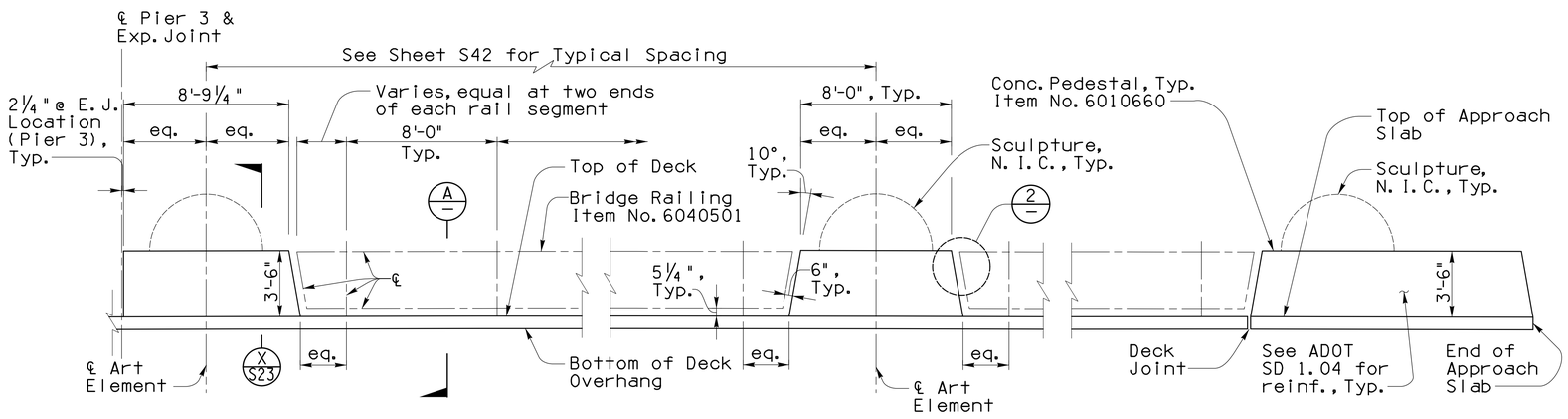

SOUTH PEDESTALS - TYPICAL
¼" = 1'-0"

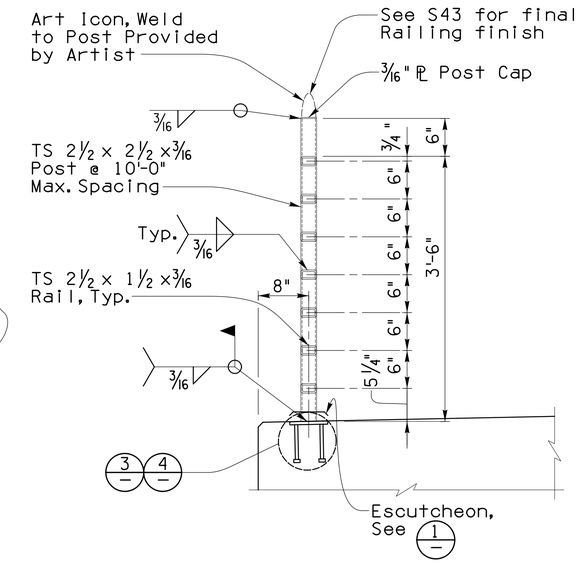

RAILING SECTION - SOUTH BRIDGE RAIL (A)
1" = 1'-0"

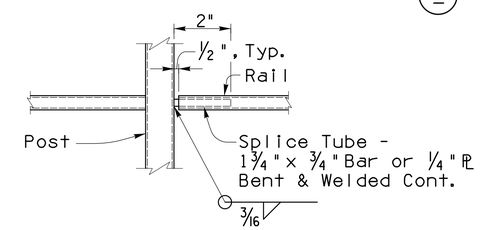

Notes:
1. Expansion joints shall be placed no more than 30'-0" o.c., and as shown on Sheet S43.

2. All exposed welds at joints and splices shall be ground smooth.

RAIL EXPANSION JOINT DETAIL (5)
1½" = 1'-0"

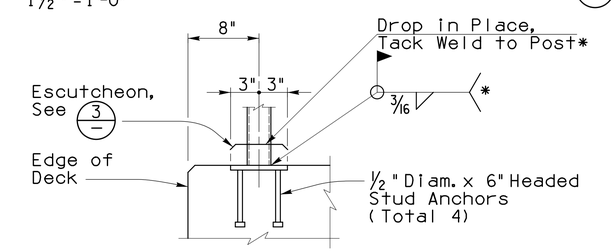

Note:
Coordinate embed/post placement so that escutcheon PL fully covers embed.

DETAIL (4)
1½" = 1'-0"

*Touch up paint after field weld.

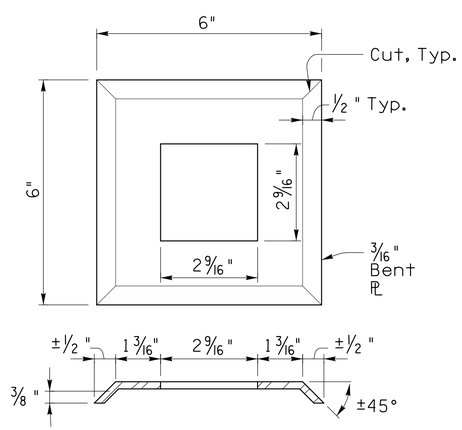

ESCUTCHEON PLATE (1)
No Scale

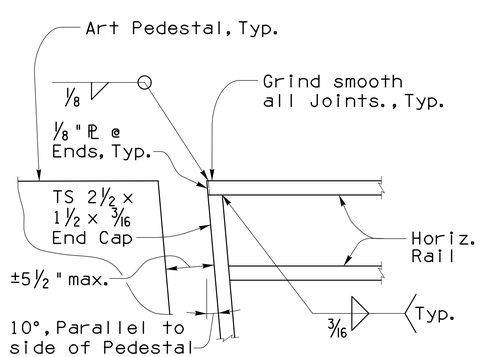

DETAIL (2)
1½" = 1'-0"

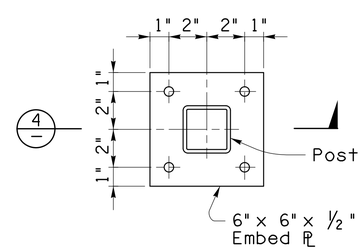

BASE PLATE (3)
3" = 1'-0"

Priscilla S. Cornello, P.E., Director

Designed	JAM	11/15
Drawn	JHS, NJL	11/15
Checked	CGP	11/15
Proj. Engr.	JAM	11/15

No.	Revision Description	Engineer	Date

Structural Grace, Inc
13131 Fort Lowell Rd., Ste. 200, Tucson, AZ 85719 (520) 23041156

Call at least two full working days before you begin excavation.
ARIZONA 811
Dial 8-1-1 or 1-800-STAKE IT (782-5348)
In Maricopa County: (602) 263-1100

Pima County Department of Transportation

BARRIER & RAIL DETAILS
SUNSET ROAD - SEGMENT 1
SILVERBELL RD. TO I-10

PROJECT NO. 4RTSUN

SUNSET ROAD - SILVERBELL ROAD TO I-10 - PROJECT NO. 4RTSUN

Scale:	As Noted	Sheet S37 of S43	Page 106 of 203

FILE NAME: W:\Jobs\2013\1326_Sunset\1326_Working\1326_Sunset_S37_FD1.dgn DATE: 11/16/2015 TIME: 4:33:18 PM MLichtenstein

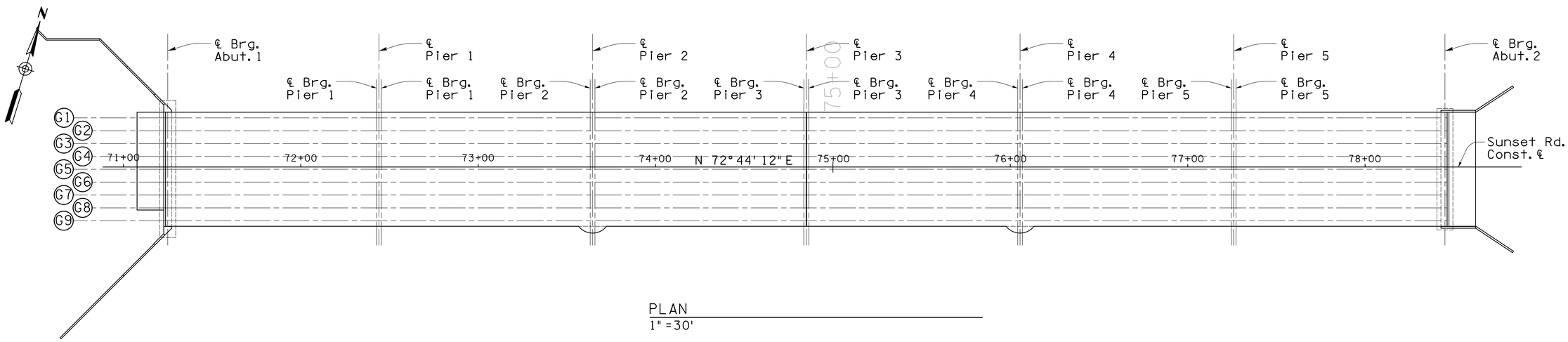

PLAN
1" = 30'

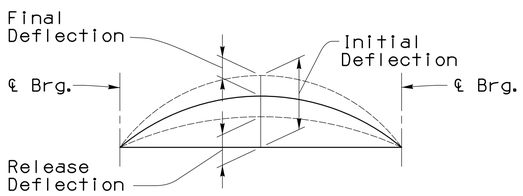

CAMBER DIAGRAM
No Scale

DEFLECTION (FT.)									
	0.1	0.2	0.3	0.4	0.5	0.6	0.7	0.8	0.9
Release	0.080	0.139	0.180	0.202	0.210	0.202	0.180	0.139	0.080
Initial	0.094	0.155	0.193	0.211	0.219	0.211	0.193	0.155	0.094
Final	0	0	0	-0.010	-0.013	-0.010	0	0	0

Deflection Notes:

1. Release Deflection equals the deflection that the prestressed girder undergoes at the time of strand release. The Release Deflection includes the dead load of the girder and the release prestressing force (including the effects of elastic shortening).

2. Initial Deflection equals the deflection the prestressed girder undergoes at the time of erection it considers deflections due to superimposed DL (deck, haunch, etc.) at time of erection. The Initial Deflection includes the deflection due to the dead load of the girder, the initial prestressing, the effects of the creep up to the time of erection (assumed at 60 days after release), and deflection due to wet concrete deck, haunch, diaphragm and precast dead load.

3. Final Deflection equals the deflection due to the dead load of the deck slab, diaphragms, barriers, and the effects of long term creep on the composite girders.

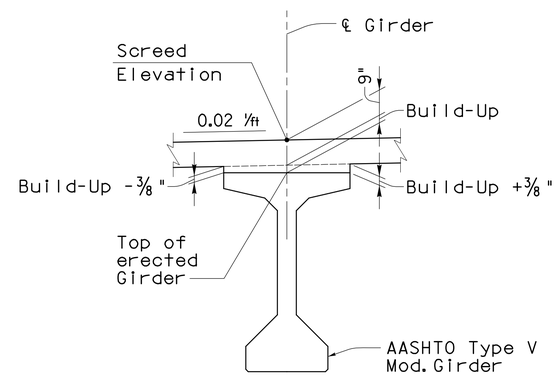

TYPICAL SECTION AT GIRDER
No Scale

Location	Build-up
℄ Brg. all Spans except Span 6	2.5"
Span 6 ℄ Brg. Pier 5 & ℄ Brg. Abut. 2	3.5"

SCREED ELEVATION NOTES:

1. The screed elevation includes an allowance for the final deflection due to the dead load of the Concrete Deck Slab, Diaphragms, Barriers, the effect of long term creep and loss of prestress.

2. Screed elevations shall be used in setting screeds regardless of the measured top of erected girder elevations (do not use finished grade elevation for setting screeds).

3. Bridge Screed Elevations are given along lines parallel to the ℄ Bearing abutments and piers.

4. The top of erected girder elevation shall be measured at every 1/10th of the Span in the field and provided to the Engineer.

5. The Contractor shall provide the As-Built girder top elevations at tenth points to the Engineer for verification of screed elevations prior to setting deck formwork.

6. The Contractor shall provide the As-Built girder bearing seat elevations at abutments and piers to the Engineer for verification prior to erecting girders.

7. The Contractor shall provide the As-Built girder bearing seat elevations at abutments and piers to the Engineer for verification of screed grade elevations prior to setting deck formwork.

8. Screed equipment is to be placed parallel with the pier. Tining will be perpendicular to the direction of the traffic.

9. The build-up shall be calculated based on the measured top of the erected girder elevation. The build-up equals the screed elevation minus measured erected girder elevation minus slab thickness. The build-up dimension at the edge of girder will be plus or minus 3/8" as shown in the TYPICAL SECTION on this drawing.

Priscilla S. Cornelio, P.E., Director

		Date
Designed	JAM	11/15
Drawn	JHS, MJL	11/15
Checked	CGP	11/15
Proj. Engr.	JAM	11/15

No.	Revision Description	Engineer	Date

Structural Grace, Inc
1331 E. Fort Lowell Rd., Ste. 200, Tucson, AZ 85719 (520) 32041156

Call at least two full working days before you begin excavation. Arizona Blue Stake, Inc. ARIZONA811 Dial 8-1-1 or 1-800-STAKE-IT (782-5348) In Maricopa County (602) 263-1100

Pima County Department of Transportation

CAMBER DIAGRAM & SCREED ELEVATION NOTES
SUNSET ROAD - SEGMENT 1
SILVERBELL RD. TO I-10
PROJECT NO. 4RTSUN

SUNSET ROAD - SILVERBELL ROAD TO I-10 - PROJECT NO. 4RTSUN

Scale:	As Noted	Sheet S38 of S43	Page 107 of 203

FILE NAME: W:\Jobs\2013\1326_Sunset\1326_Working\1326_Sunset_S38_SD1.dgn DATE: 11/16/2015 TIME: 4:33:19 PM MLichtenstein

BRIDGE SCREED ELEVATIONS-SPAN 1

LOCATION	Elevation	Begin Bridge	℄ Brg. Abut. 1	0.1 pt	0.2 pt	0.3 pt	0.4 pt	0.5 pt	0.6 pt	0.7 pt	0.8 pt	0.9 pt	℄ Brg. Span 1 Pier 1
Lt Edge of Deck	Deck Elev.	2231.31	2231.37	2231.72	2232.06	2232.39	2232.70	2233.01	2233.31	2233.59	2233.87	2234.13	2234.39
	Screed Elev.	2231.31	2231.37	2231.72	2232.06	2232.39	2232.71	2233.02	2233.31	2233.59	2233.87	2234.13	2234.39
℄ Girder G1	Deck Elev.	2231.37	2231.44	2231.78	2232.12	2232.45	2232.77	2233.07	2233.37	2233.65	2233.93	2234.19	2234.45
	Screed Elev.	2231.37	2231.44	2231.78	2232.12	2232.45	2232.77	2233.08	2233.38	2233.65	2233.93	2234.19	2234.45
℄ Girder G2	Deck Elev.	2231.51	2231.58	2231.93	2232.27	2232.59	2232.91	2233.22	2233.51	2233.80	2234.07	2234.34	2234.59
	Screed Elev.	2231.51	2231.58	2231.93	2232.27	2232.59	2232.92	2233.23	2233.52	2233.80	2234.07	2234.34	2234.59
℄ Girder G3	Deck Elev.	2231.66	2231.73	2232.07	2232.41	2232.74	2233.06	2233.36	2233.66	2233.94	2234.22	2234.48	2234.74
	Screed Elev.	2231.66	2231.73	2232.07	2232.41	2232.74	2233.06	2233.37	2233.67	2233.94	2234.22	2234.48	2234.74
℄ Girder G4	Deck Elev.	2231.80	2231.87	2232.22	2232.56	2232.88	2233.20	2233.51	2233.80	2234.09	2234.36	2234.63	2234.88
	Screed Elev.	2231.80	2231.87	2232.22	2232.56	2232.88	2233.21	2233.52	2233.81	2234.09	2234.36	2234.63	2234.88
Cst CL	Deck Elev.	2231.92	2231.99	2232.34	2232.68	2233.00	2233.32	2233.63	2233.92	2234.21	2234.48	2234.75	2235.00
	Screed Elev.	2231.92	2231.99	2232.34	2232.68	2233.00	2233.33	2233.64	2233.93	2234.21	2234.48	2234.75	2235.00
℄ Girder G5	Deck Elev.	2231.90	2231.96	2232.31	2232.65	2232.98	2233.29	2233.60	2233.90	2234.18	2234.46	2234.72	2234.98
	Screed Elev.	2231.90	2231.96	2232.31	2232.65	2232.98	2233.30	2233.61	2233.90	2234.18	2234.46	2234.72	2234.98
℄ Girder G6	Deck Elev.	2231.75	2231.82	2232.17	2232.51	2232.83	2233.15	2233.46	2233.75	2234.04	2234.31	2234.58	2234.83
	Screed Elev.	2231.75	2231.82	2232.17	2232.51	2232.83	2233.16	2233.47	2233.76	2234.04	2234.31	2234.58	2234.83
℄ Girder G7	Deck Elev.	2231.61	2231.67	2232.02	2232.36	2232.69	2233.00	2233.31	2233.61	2233.89	2234.17	2234.43	2234.69
	Screed Elev.	2231.61	2231.67	2232.02	2232.36	2232.69	2233.01	2233.32	2233.61	2233.89	2234.17	2234.43	2234.69
℄ Girder G8	Deck Elev.	2231.46	2231.53	2231.88	2232.22	2232.54	2232.86	2233.17	2233.46	2233.75	2234.02	2234.29	2234.54
	Screed Elev.	2231.46	2231.53	2231.88	2232.22	2232.54	2232.87	2233.18	2233.47	2233.75	2234.02	2234.29	2234.54
℄ Girder G9	Deck Elev.	2231.32	2231.38	2231.73	2232.07	2232.40	2232.71	2233.02	2233.32	2233.60	2233.88	2234.14	2234.40
	Screed Elev.	2231.32	2231.38	2231.73	2232.07	2232.40	2232.72	2233.03	2233.32	2233.60	2233.88	2234.14	2234.40
Rt Edge of Deck	Deck Elev.	2231.25	2231.32	2231.67	2232.01	2232.33	2232.65	2232.96	2233.25	2233.54	2233.82	2234.08	2234.34
	Screed Elev.	2231.25	2231.32	2231.67	2232.01	2232.33	2232.66	2232.97	2233.26	2233.54	2233.82	2234.08	2234.34

BRIDGE SCREED ELEVATIONS-SPAN 2

LOCATION	Elevation	℄ Pier 1	℄ Brg. Span 2 Pier 1	0.1 pt	0.2 pt	0.3 pt	0.4 pt	0.5 pt	0.6 pt	0.7 pt	0.8 pt	0.9 pt	℄ Brg. Span 2 Pier 2
Lt Edge of Deck	Deck Elev.	2234.41	2234.44	2234.68	2234.92	2235.14	2235.35	2235.55	2235.74	2235.92	2236.09	2236.25	2236.39
	Screed Elev.	2234.41	2234.44	2234.68	2234.92	2235.14	2235.36	2235.56	2235.75	2235.92	2236.09	2236.25	2236.39
℄ Girder G1	Deck Elev.	2234.48	2234.51	2234.75	2234.98	2235.20	2235.41	2235.61	2235.80	2235.98	2236.15	2236.31	2236.46
	Screed Elev.	2234.48	2234.51	2234.75	2234.98	2235.20	2235.42	2235.62	2235.81	2235.98	2236.15	2236.31	2236.46
℄ Girder G2	Deck Elev.	2234.62	2234.65	2234.89	2235.12	2235.34	2235.56	2235.76	2235.95	2236.13	2236.29	2236.45	2236.60
	Screed Elev.	2234.62	2234.65	2234.89	2235.12	2235.34	2235.57	2235.77	2235.96	2236.13	2236.29	2236.45	2236.60
℄ Girder G3	Deck Elev.	2234.77	2234.80	2235.04	2235.27	2235.49	2235.70	2235.90	2236.09	2236.27	2236.44	2236.60	2236.75
	Screed Elev.	2234.77	2234.80	2235.04	2235.27	2235.49	2235.71	2235.91	2236.10	2236.27	2236.44	2236.60	2236.75
℄ Girder G4	Deck Elev.	2234.91	2234.94	2235.18	2235.41	2235.63	2235.85	2236.05	2236.24	2236.42	2236.58	2236.74	2236.89
	Screed Elev.	2234.91	2234.94	2235.18	2235.41	2235.63	2235.86	2236.06	2236.25	2236.42	2236.58	2236.74	2236.89
Cst CL	Deck Elev.	2235.03	2235.06	2235.30	2235.53	2235.75	2235.97	2236.17	2236.36	2236.54	2236.70	2236.86	2237.01
	Screed Elev.	2235.03	2235.06	2235.30	2235.53	2235.75	2235.97	2236.18	2236.37	2236.54	2236.70	2236.86	2237.01
℄ Girder G5	Deck Elev.	2235.01	2235.03	2235.28	2235.51	2235.73	2235.94	2236.14	2236.33	2236.51	2236.68	2236.84	2236.99
	Screed Elev.	2235.01	2235.03	2235.28	2235.51	2235.73	2235.95	2236.15	2236.34	2236.51	2236.68	2236.84	2236.99
℄ Girder G6	Deck Elev.	2234.86	2234.89	2235.13	2235.36	2235.58	2235.79	2236.00	2236.19	2236.36	2236.53	2236.69	2236.84
	Screed Elev.	2234.86	2234.89	2235.13	2235.36	2235.58	2235.80	2236.01	2236.19	2236.36	2236.53	2236.69	2236.84
℄ Girder G7	Deck Elev.	2234.72	2234.74	2234.99	2235.22	2235.44	2235.65	2235.85	2236.04	2236.22	2236.39	2236.55	2236.70
	Screed Elev.	2234.72	2234.74	2234.99	2235.22	2235.44	2235.66	2235.86	2236.05	2236.22	2236.39	2236.55	2236.70
℄ Girder G8	Deck Elev.	2234.57	2234.60	2234.84	2235.07	2235.29	2235.50	2235.71	2235.90	2236.07	2236.24	2236.40	2236.55
	Screed Elev.	2234.57	2234.60	2234.84	2235.07	2235.29	2235.51	2235.72	2235.90	2236.07	2236.24	2236.40	2236.55
℄ Girder G9	Deck Elev.	2234.43	2234.45	2234.70	2234.93	2235.15	2235.36	2235.56	2235.75	2235.93	2236.10	2236.26	2236.41
	Screed Elev.	2234.43	2234.45	2234.70	2234.93	2235.15	2235.37	2235.57	2235.76	2235.93	2236.10	2236.26	2236.41
Rt Edge of Deck	Deck Elev.	2234.36	2234.39	2234.63	2234.86	2235.09	2235.30	2235.50	2235.69	2235.87	2236.04	2236.20	2236.34
	Screed Elev.	2234.36	2234.39	2234.63	2234.86	2235.09	2235.31	2235.51	2235.70	2235.87	2236.04	2236.20	2236.34

Priscilla S. Cornello, P.E., Director

Designed	JAM	11/15
Drawn	JHS, MJL	11/15
Checked	CGP	11/15
Proj. Engr.	JAM	11/15

No.	Revision Description	Engineer	Date

Structural Grace, Inc
1434 E. Fort Lowell Rd., Ste. 200, Tucson, AZ 85719 (520) 320-0156

Call at least two full working days before you begin excavation.
ARIZONA811
Arizona Blue Stake, Inc.
Dial 8-1-1 or 1-800-STAKE-IT (782-5348)
In Maricopa County: (602) 263-1100

Pima County Department of Transportation

SCREED ELEVATIONS - 1 OF 3
SUNSET ROAD - SEGMENT 1
SILVERBELL RD. TO I-10
PROJECT NO. 4RTSUN

SUNSET ROAD - SILVERBELL ROAD TO I-10 - PROJECT NO. 4RTSUN

Scale: As Noted | Sheet S39 of S43 | Page 108 of 203

FILE NAME: W:\Jobs\2013\1326_Sunset\1326_Working\1326_Sunset_S39_SD2.dgn DATE: 11/16/2015 TIME: 4:33:19 PM MLichtenstein

BRIDGE SCREED ELEVATIONS-SPAN 3

LOCATION	Elevation	℄ Pier 2	℄ Brg. Span 3 Pier 2	0.1 pt	0.2 pt	0.3 pt	0.4 pt	0.5 pt	0.6 pt	0.7 pt	0.8 pt	0.9 pt	℄ Brg. Span 3 Pier 3
Lt Edge of Deck	Deck Elev.	2236.41	2236.43	2236.56	2236.69	2236.80	2236.91	2237.00	2237.09	2237.16	2237.22	2237.27	2237.32
	Screed Elev.	2236.41	2236.43	2236.56	2236.69	2236.80	2236.92	2237.02	2237.10	2237.16	2237.22	2237.27	2237.32
℄ Girder G1	Deck Elev.	2236.47	2236.49	2236.63	2236.75	2236.87	2236.97	2237.06	2237.15	2237.22	2237.29	2237.34	2237.38
	Screed Elev.	2236.47	2236.49	2236.63	2236.75	2236.87	2236.98	2237.08	2237.16	2237.22	2237.29	2237.34	2237.38
℄ Girder G2	Deck Elev.	2236.62	2236.63	2236.77	2236.90	2237.01	2237.12	2237.21	2237.29	2237.37	2237.43	2237.48	2237.53
	Screed Elev.	2236.62	2236.63	2236.77	2236.90	2237.01	2237.13	2237.22	2237.30	2237.37	2237.43	2237.48	2237.53
℄ Girder G3	Deck Elev.	2236.76	2236.78	2236.92	2237.04	2237.16	2237.26	2237.35	2237.44	2237.51	2237.58	2237.63	2237.67
	Screed Elev.	2236.76	2236.78	2236.92	2237.04	2237.16	2237.27	2237.37	2237.45	2237.51	2237.58	2237.63	2237.67
℄ Girder G4	Deck Elev.	2236.91	2236.92	2237.06	2237.19	2237.30	2237.41	2237.50	2237.58	2237.66	2237.72	2237.77	2237.82
	Screed Elev.	2236.91	2236.92	2237.06	2237.19	2237.30	2237.42	2237.51	2237.59	2237.66	2237.72	2237.77	2237.82
Cst CL	Deck Elev.	2237.03	2237.04	2237.18	2237.31	2237.42	2237.52	2237.62	2237.70	2237.78	2237.84	2237.89	2237.93
	Screed Elev.	2237.03	2237.04	2237.18	2237.31	2237.42	2237.53	2237.63	2237.71	2237.78	2237.84	2237.89	2237.93
℄ Girder G5	Deck Elev.	2237.00	2237.02	2237.15	2237.28	2237.39	2237.50	2237.59	2237.68	2237.75	2237.81	2237.87	2237.91
	Screed Elev.	2237.00	2237.02	2237.15	2237.28	2237.39	2237.51	2237.61	2237.69	2237.75	2237.81	2237.87	2237.91
℄ Girder G6	Deck Elev.	2236.86	2236.87	2237.01	2237.13	2237.25	2237.35	2237.45	2237.53	2237.61	2237.67	2237.72	2237.76
	Screed Elev.	2236.86	2236.87	2237.01	2237.13	2237.25	2237.36	2237.46	2237.54	2237.61	2237.67	2237.72	2237.76
℄ Girder G7	Deck Elev.	2236.71	2236.73	2236.86	2236.99	2237.10	2237.21	2237.30	2237.39	2237.46	2237.52	2237.58	2237.62
	Screed Elev.	2236.71	2236.73	2236.86	2236.99	2237.10	2237.22	2237.32	2237.40	2237.46	2237.52	2237.58	2237.62
℄ Girder G8	Deck Elev.	2236.57	2236.58	2236.72	2236.84	2236.96	2237.06	2237.16	2237.24	2237.32	2237.38	2237.43	2237.47
	Screed Elev.	2236.57	2236.58	2236.72	2236.84	2236.96	2237.07	2237.17	2237.25	2237.32	2237.38	2237.43	2237.47
℄ Girder G9	Deck Elev.	2236.42	2236.44	2236.57	2236.70	2236.81	2236.92	2237.01	2237.10	2237.17	2237.23	2237.29	2237.33
	Screed Elev.	2236.42	2236.44	2236.57	2236.70	2236.81	2236.93	2237.03	2237.11	2237.17	2237.23	2237.29	2237.33
Rt Edge of Deck	Deck Elev.	2236.36	2236.38	2236.51	2236.64	2236.75	2236.86	2236.95	2237.03	2237.11	2237.17	2237.22	2237.27
	Screed Elev.	2236.36	2236.38	2236.51	2236.64	2236.75	2236.87	2236.96	2237.04	2237.11	2237.17	2237.22	2237.27

BRIDGE SCREED ELEVATIONS-SPAN 4

LOCATION	Elevation	℄ Pier 3	℄ Brg. Span 4 Pier 3	0.1 pt	0.2 pt	0.3 pt	0.4 pt	0.5 pt	0.6 pt	0.7 pt	0.8 pt	0.9 pt	℄ Brg. Span 4 Pier 4
Lt Edge of Deck	Deck Elev.	2237.32	2237.33	2237.36	2237.37	2237.38	2237.38	2237.37	2237.35	2237.31	2237.27	2237.22	2237.15
	Screed Elev.	2237.32	2237.33	2237.36	2237.37	2237.38	2237.39	2237.38	2237.36	2237.31	2237.27	2237.22	2237.15
℄ Girder G1	Deck Elev.	2237.38	2237.39	2237.42	2237.44	2237.45	2237.44	2237.43	2237.41	2237.38	2237.33	2237.28	2237.22
	Screed Elev.	2237.38	2237.39	2237.42	2237.44	2237.45	2237.45	2237.45	2237.42	2237.38	2237.33	2237.28	2237.22
℄ Girder G2	Deck Elev.	2237.53	2237.53	2237.56	2237.58	2237.59	2237.59	2237.58	2237.56	2237.52	2237.48	2237.43	2237.36
	Screed Elev.	2237.53	2237.53	2237.56	2237.58	2237.59	2237.60	2237.59	2237.57	2237.52	2237.48	2237.43	2237.36
℄ Girder G3	Deck Elev.	2237.67	2237.68	2237.71	2237.73	2237.74	2237.73	2237.72	2237.70	2237.67	2237.62	2237.57	2237.51
	Screed Elev.	2237.67	2237.68	2237.71	2237.73	2237.74	2237.74	2237.74	2237.71	2237.67	2237.62	2237.57	2237.51
℄ Girder G4	Deck Elev.	2237.82	2237.82	2237.85	2237.87	2237.88	2237.88	2237.87	2237.85	2237.81	2237.77	2237.72	2237.65
	Screed Elev.	2237.82	2237.82	2237.85	2237.87	2237.88	2237.89	2237.88	2237.86	2237.81	2237.77	2237.72	2237.65
Cst CL	Deck Elev.	2237.94	2237.94	2237.97	2237.99	2238.00	2238.00	2237.99	2237.96	2237.93	2237.89	2237.84	2237.77
	Screed Elev.	2237.94	2237.94	2237.97	2237.99	2238.00	2238.01	2238.00	2237.97	2237.93	2237.89	2237.84	2237.77
℄ Girder G5	Deck Elev.	2237.91	2237.92	2237.95	2237.97	2237.98	2237.97	2237.96	2237.94	2237.91	2237.86	2237.81	2237.75
	Screed Elev.	2237.91	2237.92	2237.95	2237.97	2237.98	2237.98	2237.98	2237.95	2237.91	2237.86	2237.81	2237.75
℄ Girder G6	Deck Elev.	2237.77	2237.77	2237.80	2237.82	2237.83	2237.83	2237.82	2237.79	2237.76	2237.72	2237.66	2237.60
	Screed Elev.	2237.77	2237.77	2237.80	2237.82	2237.83	2237.84	2237.83	2237.80	2237.76	2237.72	2237.66	2237.60
℄ Girder G7	Deck Elev.	2237.62	2237.63	2237.66	2237.68	2237.69	2237.68	2237.67	2237.65	2237.62	2237.57	2237.52	2237.46
	Screed Elev.	2237.62	2237.63	2237.66	2237.68	2237.69	2237.69	2237.69	2237.66	2237.62	2237.57	2237.52	2237.46
℄ Girder G8	Deck Elev.	2237.48	2237.48	2237.51	2237.53	2237.54	2237.54	2237.53	2237.50	2237.47	2237.43	2237.37	2237.31
	Screed Elev.	2237.48	2237.48	2237.51	2237.53	2237.54	2237.55	2237.54	2237.51	2237.47	2237.43	2237.37	2237.31
℄ Girder G9	Deck Elev.	2237.33	2237.34	2237.37	2237.39	2237.40	2237.39	2237.38	2237.36	2237.33	2237.28	2237.23	2237.17
	Screed Elev.	2237.33	2237.34	2237.37	2237.39	2237.40	2237.40	2237.40	2237.37	2237.33	2237.28	2237.23	2237.17
Rt Edge of Deck	Deck Elev.	2237.27	2237.28	2237.30	2237.32	2237.33	2237.33	2237.32	2237.30	2237.26	2237.22	2237.17	2237.10
	Screed Elev.	2237.27	2237.28	2237.30	2237.32	2237.33	2237.34	2237.33	2237.31	2237.26	2237.22	2237.17	2237.10

Pima County Department of Transportation

Priscilla S. Cornelio, P.E., Director

Designed	JAM	11/15
Drawn	JHS, MJL	11/15
Checked	CGP	11/15
Proj. Engr.	JAM	11/15

No.	Revision Description	Engineer	Date

Structural Grace, Inc
1434 E. Fort Lowell Rd., Ste. 200, Tucson, AZ 85719 (520) 320-0156

Call at least two full working days before you begin excavation. ARIZONA811 Arizona Blue Stake, Inc. Dial 8-1-1 or 1-800-STAKE-IT (782-5348) In Maricopa County: (602) 263-1100

SCREED ELEVATIONS - 2 OF 3
SUNSET ROAD - SEGMENT 1
SILVERBELL RD. TO I-10
PROJECT NO. 4RTSUN

SUNSET ROAD - SILVERBELL ROAD TO I-10 - PROJECT NO. 4RTSUN

Scale: As Noted | Sheet S40 of S43 | Page 109 of 203

FILE NAME: W:\Jobs\2013\1326_Sunset\1326_Working\1326_Sunset_S40_SD3.dgn DATE: 11/16/2015 TIME: 4:33:20 PM MLichtenstein

BRIDGE SCREED ELEVATIONS-SPAN 5

LOCATION	Elevation	℄ Pier 4	℄ Brg. Span 5 Pier 4	0.1 pt	0.2 pt	0.3 pt	0.4 pt	0.5 pt	0.6 pt	0.7 pt	0.8 pt	0.9 pt	℄ Brg. Span 5 Pier 5
Lt Edge of Deck	Deck Elev.	2237.15	2237.14	2237.06	2236.97	2236.88	2236.77	2236.65	2236.52	2236.38	2236.23	2236.07	2235.90
	Screed Elev.	2237.15	2237.14	2237.06	2236.97	2236.88	2236.78	2236.66	2236.53	2236.38	2236.23	2236.07	2235.90
℄ Girder G1	Deck Elev.	2237.21	2237.20	2237.12	2237.04	2236.94	2236.83	2236.71	2236.59	2236.45	2236.30	2236.14	2235.97
	Screed Elev.	2237.21	2237.20	2237.12	2237.04	2236.94	2236.84	2236.73	2236.59	2236.45	2236.30	2236.14	2235.97
℄ Girder G2	Deck Elev.	2237.35	2237.35	2237.27	2237.18	2237.08	2236.98	2236.86	2236.73	2236.59	2236.44	2236.28	2236.11
	Screed Elev.	2237.35	2237.35	2237.27	2237.18	2237.08	2236.99	2236.87	2236.74	2236.59	2236.44	2236.28	2236.11
℄ Girder G3	Deck Elev.	2237.50	2237.49	2237.41	2237.33	2237.23	2237.12	2237.00	2236.88	2236.74	2236.59	2236.43	2236.26
	Screed Elev.	2237.50	2237.49	2237.41	2237.33	2237.23	2237.13	2237.02	2236.88	2236.74	2236.59	2236.43	2236.26
℄ Girder G4	Deck Elev.	2237.64	2237.64	2237.56	2237.47	2237.37	2237.27	2237.15	2237.02	2236.88	2236.73	2236.57	2236.40
	Screed Elev.	2237.64	2237.64	2237.56	2237.47	2237.37	2237.28	2237.16	2237.03	2236.88	2236.73	2236.57	2236.40
Cst CL	Deck Elev.	2237.76	2237.76	2237.68	2237.59	2237.49	2237.39	2237.27	2237.14	2237.00	2236.85	2236.69	2236.52
	Screed Elev.	2237.76	2237.76	2237.68	2237.59	2237.49	2237.40	2237.28	2237.15	2237.00	2236.85	2236.69	2236.52
℄ Girder G5	Deck Elev.	2237.74	2237.73	2237.65	2237.57	2237.47	2237.36	2237.24	2237.11	2236.98	2236.83	2236.67	2236.50
	Screed Elev.	2237.74	2237.73	2237.65	2237.57	2237.47	2237.37	2237.26	2237.12	2236.98	2236.83	2236.67	2236.50
℄ Girder G6	Deck Elev.	2237.59	2237.58	2237.51	2237.42	2237.32	2237.22	2237.10	2236.97	2236.83	2236.68	2236.52	2236.35
	Screed Elev.	2237.59	2237.58	2237.51	2237.42	2237.32	2237.23	2237.11	2236.98	2236.83	2236.68	2236.52	2236.35
℄ Girder G7	Deck Elev.	2237.45	2237.44	2237.36	2237.28	2237.18	2237.07	2236.95	2236.82	2236.69	2236.54	2236.38	2236.21
	Screed Elev.	2237.45	2237.44	2237.36	2237.28	2237.18	2237.08	2236.97	2236.83	2236.69	2236.54	2236.38	2236.21
℄ Girder G8	Deck Elev.	2237.30	2237.29	2237.22	2237.13	2237.03	2236.93	2236.81	2236.68	2236.54	2236.39	2236.23	2236.06
	Screed Elev.	2237.30	2237.29	2237.22	2237.13	2237.03	2236.94	2236.82	2236.69	2236.54	2236.39	2236.23	2236.06
℄ Girder G9	Deck Elev.	2237.16	2237.15	2237.07	2236.99	2236.89	2236.78	2236.66	2236.53	2236.40	2236.25	2236.09	2235.92
	Screed Elev.	2237.16	2237.15	2237.07	2236.99	2236.89	2236.79	2236.68	2236.54	2236.40	2236.25	2236.09	2235.92
Rt Edge of Deck	Deck Elev.	2237.09	2237.09	2237.01	2236.92	2236.83	2236.72	2236.60	2236.47	2236.33	2236.18	2236.02	2235.85
	Screed Elev.	2237.09	2237.09	2237.01	2236.92	2236.83	2236.73	2236.61	2236.48	2236.33	2236.18	2236.02	2235.85

BRIDGE SCREED ELEVATIONS-SPAN 6

LOCATION	Elevation	℄ Pier 5	℄ Brg. Span 6 Pier 5	0.1 pt	0.2 pt	0.3 pt	0.4 pt	0.5 pt	0.6 pt	0.7 pt	0.8 pt	0.9 pt	℄ Brg. Abut. 2
Lt Edge of Deck	Deck Elev.	2235.88	2235.86	2235.68	2235.49	2235.28	2235.07	2234.85	2234.63	2234.41	2234.19	2233.97	2233.75
	Screed Elev.	2235.88	2235.86	2235.68	2235.49	2235.28	2235.08	2234.86	2234.64	2234.41	2234.19	2233.97	2233.75
℄ Girder G1	Deck Elev.	2235.95	2235.93	2235.74	2235.55	2235.35	2235.13	2234.91	2234.69	2234.47	2234.25	2234.04	2233.82
	Screed Elev.	2235.95	2235.93	2235.74	2235.55	2235.35	2235.14	2234.92	2234.70	2234.47	2234.25	2234.04	2233.82
℄ Girder G2	Deck Elev.	2236.09	2236.07	2235.89	2235.70	2235.49	2235.28	2235.06	2234.84	2234.62	2234.40	2234.18	2233.96
	Screed Elev.	2236.09	2236.07	2235.89	2235.70	2235.49	2235.29	2235.07	2234.85	2234.62	2234.40	2234.18	2233.96
℄ Girder G3	Deck Elev.	2236.24	2236.22	2236.03	2235.84	2235.64	2235.42	2235.20	2234.98	2234.76	2234.54	2234.33	2234.11
	Screed Elev.	2236.24	2236.22	2236.03	2235.84	2235.64	2235.43	2235.21	2234.99	2234.76	2234.54	2234.33	2234.11
℄ Girder G4	Deck Elev.	2236.38	2236.36	2236.18	2235.99	2235.78	2235.57	2235.35	2235.13	2234.91	2234.69	2234.47	2234.25
	Screed Elev.	2236.38	2236.36	2236.18	2235.99	2235.78	2235.58	2235.36	2235.14	2234.91	2234.69	2234.47	2234.25
Cst CL	Deck Elev.	2236.50	2236.48	2236.30	2236.11	2235.90	2235.69	2235.47	2235.25	2235.03	2234.81	2234.59	2234.37
	Screed Elev.	2236.50	2236.48	2236.30	2236.11	2235.90	2235.70	2235.48	2235.26	2235.03	2234.81	2234.59	2234.37
℄ Girder G5	Deck Elev.	2236.48	2236.46	2236.27	2236.08	2235.88	2235.66	2235.44	2235.22	2235.00	2234.78	2234.56	2234.34
	Screed Elev.	2236.48	2236.46	2236.27	2236.08	2235.88	2235.67	2235.45	2235.23	2235.00	2234.78	2234.56	2234.34
℄ Girder G6	Deck Elev.	2236.33	2236.31	2236.13	2235.94	2235.73	2235.52	2235.30	2235.08	2234.86	2234.64	2234.42	2234.20
	Screed Elev.	2236.33	2236.31	2236.13	2235.94	2235.73	2235.53	2235.31	2235.09	2234.86	2234.64	2234.42	2234.20
℄ Girder G7	Deck Elev.	2236.19	2236.17	2235.98	2235.79	2235.59	2235.37	2235.15	2234.93	2234.71	2234.49	2234.27	2234.05
	Screed Elev.	2236.19	2236.17	2235.98	2235.79	2235.59	2235.38	2235.16	2234.94	2234.71	2234.49	2234.27	2234.05
℄ Girder G8	Deck Elev.	2236.04	2236.02	2235.84	2235.65	2235.44	2235.23	2235.01	2234.79	2234.57	2234.35	2234.13	2233.91
	Screed Elev.	2236.04	2236.02	2235.84	2235.65	2235.44	2235.24	2235.02	2234.80	2234.57	2234.35	2234.13	2233.91
℄ Girder G9	Deck Elev.	2235.90	2235.88	2235.69	2235.50	2235.30	2235.08	2234.86	2234.64	2234.42	2234.20	2233.98	2233.76
	Screed Elev.	2235.90	2235.88	2235.69	2235.50	2235.30	2235.09	2234.87	2234.65	2234.42	2234.20	2233.98	2233.76
Rt Edge of Deck	Deck Elev.	2235.83	2235.81	2235.63	2235.44	2235.23	2235.02	2234.80	2234.58	2234.36	2234.14	2233.92	2233.70
	Screed Elev.	2235.83	2235.81	2235.63	2235.44	2235.23	2235.03	2234.81	2234.59	2234.36	2234.14	2233.92	2233.70

Pima County Department of Transportation

Priscilla S. Cornelio, P.E., Director

Designed	JAM	11/15
Drawn	JHS, NJL	11/15
Checked	CGP	11/15
Proj. Engr.	JAM	11/15

No.	Revision Description	Engineer	Date

Structural Grace, Inc
1434 E. Fort Lowell Rd., Ste. 200, Tucson, AZ 85719 (520) 320-0156

Call at least two full working days before you begin excavation. ARIZONA811 Arizona Blue Stake, Inc. Dial 8-1-1 or 1-800-STAKE IT (782-5348) In Maricopa County: (602) 263-1100

SCREED ELEVATIONS - 3 OF 3
SUNSET ROAD - SEGMENT 1
SILVERBELL RD. TO I-10

PROJECT NO. 4RTSUN

SUNSET ROAD - SILVERBELL ROAD TO I-10 - PROJECT NO. 4RTSUN

Scale: As Noted | Sheet S41 of S43 | Page 110 of 203

FILE NAME: W:\Jobs\2013\1326_Sunset\1326_Working\1326_Sunset_S41_SD4.dgn DATE: 11/16/2015 TIME: 4:33:21 PM MLichtenstein

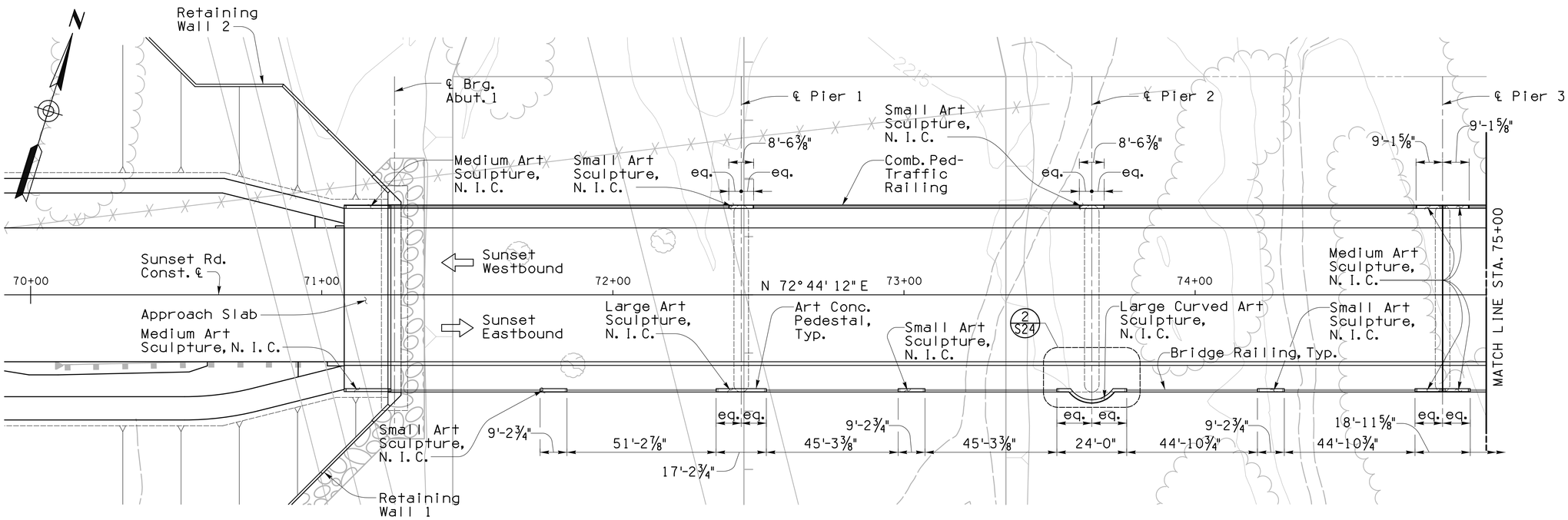

PARTIAL PLAN - WEST

1" =20'-0"

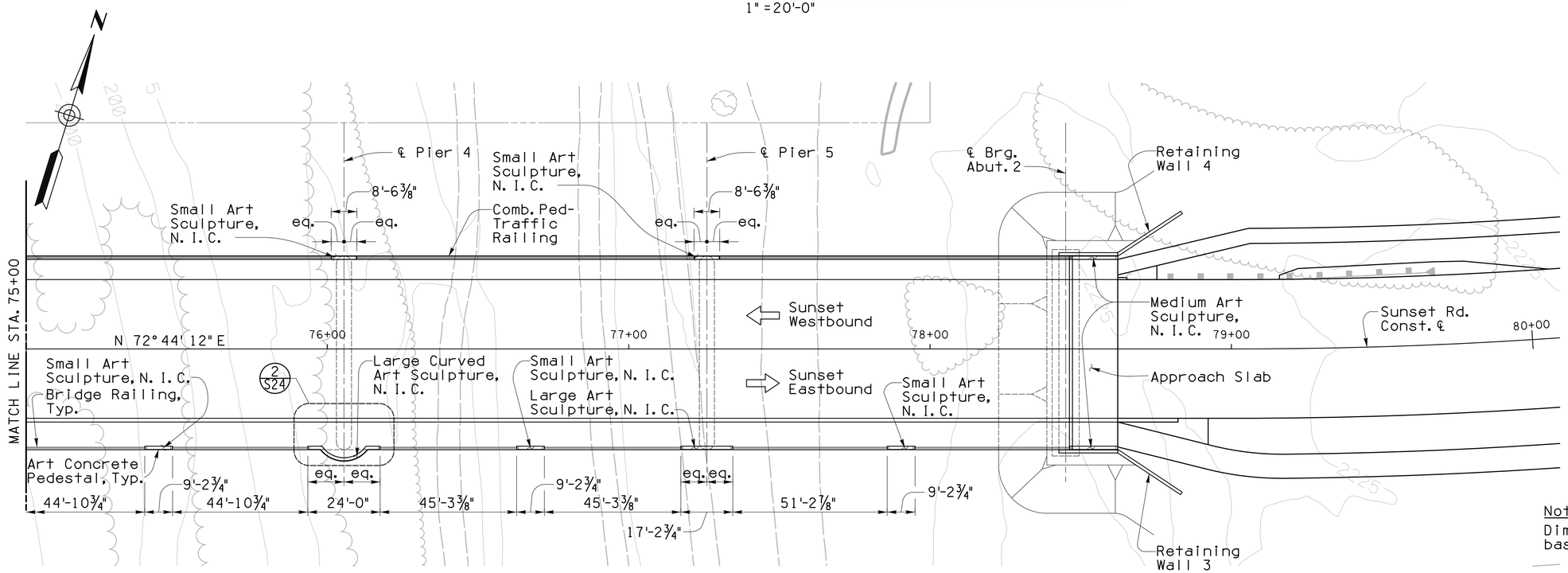

Note:
Dimensions measured at base of each pedestal.

PARTIAL PLAN - EAST

1" =20'-0"

Priscilla S. Cornello, P.E., Director

Pima County Department of Transportation

Designed	DDD	11/15
Drawn	JHS, NJL	11/15
Checked	CGP	11/15
Proj. Engr.	JAM	11/15

No.	Revision Description	Engineer	Date

Structural Grace, Inc
1131 E. Fort Lowell Rd., Ste. 200, Tucson, AZ 85719 (520) 320-0156

Call at least two full working days before you begin excavation.
ARIZONA 811
Arizona Blue Stake, Inc.
Dial 8-1-1 or 1-800-STAKE IT (782-5348)
In Maricopa County: (602) 263-1100

BRIDGE ARCHITECTURE - 1 OF 2
SUNSET ROAD - SEGMENT 1
SILVERBELL RD. TO I-10

PROJECT NO. 4RTSUN

SUNSET ROAD - SILVERBELL ROAD TO I-10 - PROJECT NO. 4RTSUN

Scale:	As Noted	Sheet S42 of S43	Page 111 of 203

FILE NAME: W:\Jobs\2013\1326_Sunset\1326_Working\1326_Sunset_S42_BA2.dgn DATE: 11/16/2015 TIME: 4:33:24 PM MLichtenstein

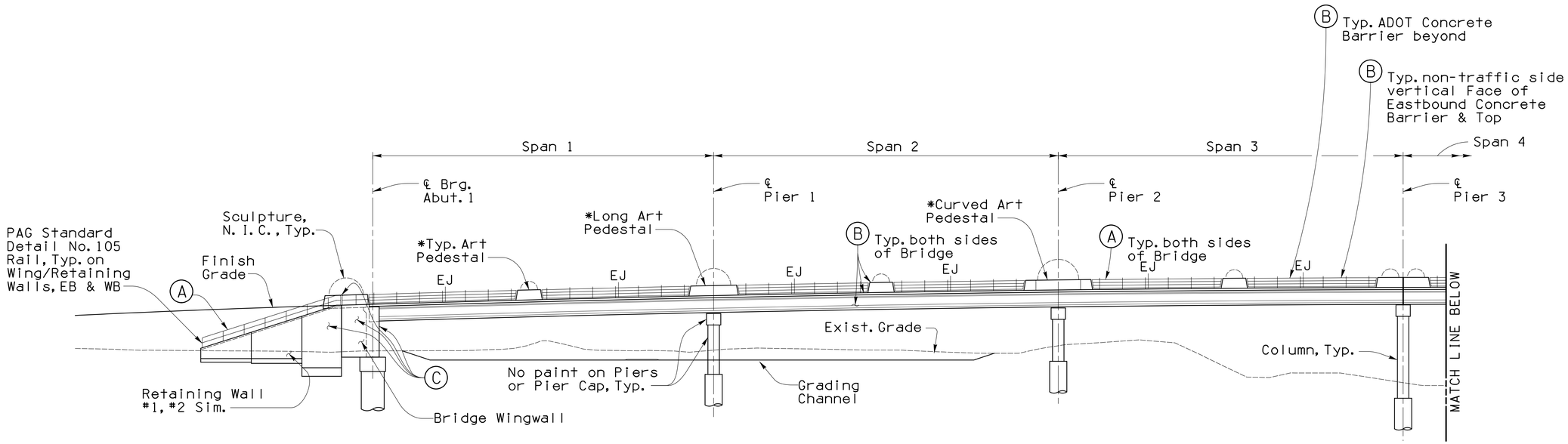

PARTIAL SOUTH ELEVATION
1"=20'

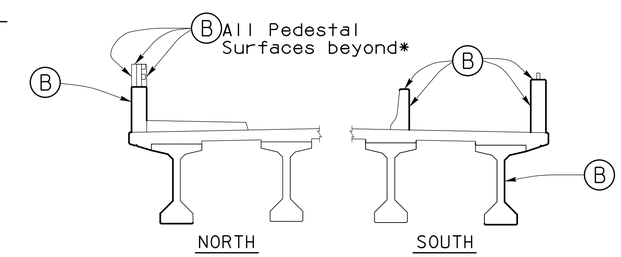

Note: Paint (B) Color per this diagram

DIAGRAMATIC SECTION
No Scale

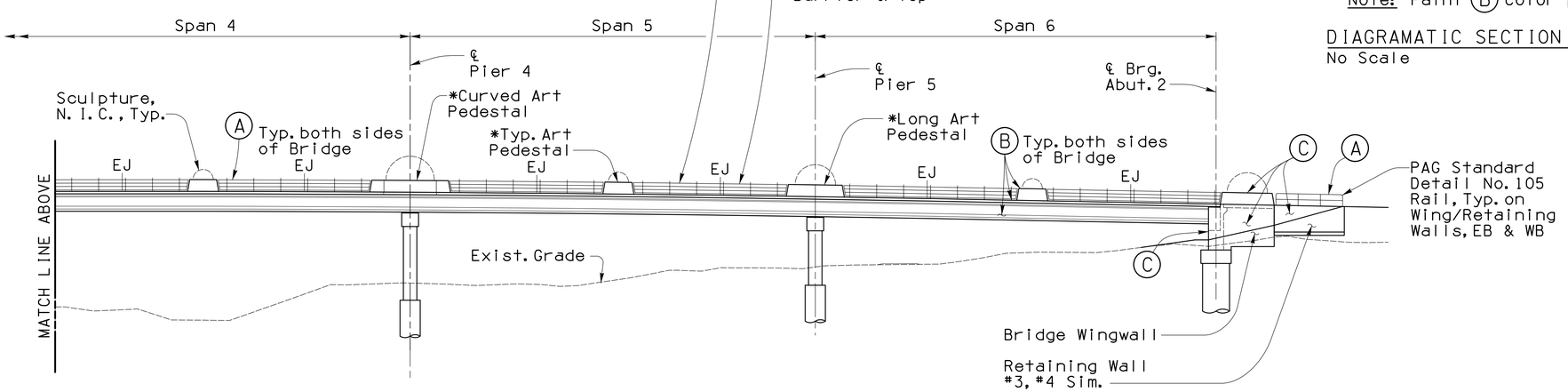

PARTIAL SOUTH ELEVATION
1"=20'

COLOR/MATERIAL PALETTE	
(A)	Prime and Paint to match Clear Co. zinc rich primer/silver zinc primer 70 with final coat Pittsburgh Paints PPG 90-477/05 or approved equal.
(B)	Painted Concrete - Paint to match Pittsburgh Paints PPG, 313-4 'Earthy Cane' or approved equal
(C)	Painted Concrete - Paint to match Pittsburgh Paints PPG, 313-5 'Rattan' or approved equal

*Paint all Surfaces of Art Pedestals

Note:

Paint cost incidental to painted material per Std. Specifications Sec. 610

Priscilla S. Cornello, P.E., Director

Designed	DDD	Date 11/15
Drawn	JHS, NJL	11/15
Checked	CGP	11/15
Proj. Engr.	JAM	11/15

No.	Revision Description	Engineer	Date

Structural Grace, Inc
1131 E. East Lowell Rd., Ste. 200, Tucson, AZ 85719 (520) 3204156

Call at least two full working days before you begin excavation. ARIZONA811 Arizona Blue Stake, Inc. Dial 8-1-1 or 1-800-STAKE IT (782-5348) In Maricopa County: (602) 263-1100

BRIDGE ARCHITECTURE - 2 OF 2
SUNSET ROAD - SEGMENT 1
SILVERBELL RD. TO I-10
PROJECT NO. 4RTSUN

Pima County Department of Transportation

SUNSET ROAD - SILVERBELL ROAD TO I-10 - PROJECT NO. 4RTSUN

Scale:	As Noted	Sheet S43 of S43	Page 112 of 203

FILE NAME: W:\Jobs\2013\1326_Sunset\1326_Working\1326_Sunset_S43_BA1.dgn DATE: 11/16/2015 TIME: 4:33:24 PM MLichtenstein

GENERAL NOTES

1. GENERAL SOIL AND ROCK (WHERE ENCOUNTERED) STRATA DESCRIPTIONS AND INDICATED BOUNDARIES ARE BASED ON ENGINEERING INTERPRETATION OF AVAILABLE SUBSURFACE INFORMATION BY THE GEOTECHNICAL ENGINEER AND MAY NOT REFLECT ACTUAL VARIATION IN SUBSURFACE CONDITIONS BETWEEN BORINGS AND SAMPLES. THE LOCATION OF CONTACTS BETWEEN STRATA MAY BE GRADUAL RATHER THAN ABRUPT. CLASSIFICATION OF SOIL MATERIAL IS IN GENERAL ACCORDANCE WITH ASTM D 2488-93 AND IS PRESENTED IN THE GEOTECHNICAL REPORT.

2. THE OBSERVED WATER LEVELS AND/OR MOISTURE CONDITIONS INDICATED ON THE BORING LOGS ARE AS RECORDED AT THE TIME OF FIELD INVESTIGATION. THESE WATER LEVELS AND/OR MOISTURE CONDITIONS MAY VARY CONSIDERABLY WITH TIME ACCORDING TO THE PREVAILING CLIMATE, RAINFALL OR OTHER FACTORS AND ARE OTHERWISE DEPENDENT UPON THE DURATION OF AND METHODS USED IN THE FIELD INVESTIGATION PROGRAM.

3. SOUND ENGINEERING JUDGMENT WAS EXERCISED IN PREPARING THE SUBSURFACE INFORMATION PRESENTED ON THESE SHEETS. THIS INFORMATION WAS PREPARED AND IS INTENDED FOR DESIGN AND ESTIMATING PURPOSES. ITS PRESENTATION ON THE PLANS OR ELSEWHERE IS FOR THE PURPOSE OF PROVIDING INTENDED USERS WITH ACCESS TO THE SAME INFORMATION AS WAS PROVIDED TO THE COUNTY AND ITS DESIGNERS. INTERPRETATIONS OF SUBSURFACE INFORMATION ARE PRESENTED IN GOOD FAITH AND ARE NOT INTENDED AS A SUBSTITUTE FOR PERSONAL INVESTIGATION, INDEPENDENT INTERPRETATIONS OR JUDGMENT OF THE CONTRACTOR.

4. A 140 LB. HAMMER, 30-INCH FREE-FALL, WAS USED TO DRIVE BOTH THE STANDARD PENETRATION TEST (SPT) SPLIT-SPOON SAMPLER AND THE RING-LINED SAMPLER IN GENERAL CONFORMANCE WITH ASTM D 1586-96 AND D 3550-01, RESPECTIVELY.

5. FOR FURTHER INFORMATION, REFER TO NCS' REPORT "FINAL GEOTECHNICAL REPORT - SUNSET ROAD: SILVERBELL ROAD TO RIVER ROAD."

6. REACTION TO DILUTE HCL (AS PER ASTM D 2488) DOES NOT NECESSARILY CORRELATE TO THE DEGREE OF CARBONATE CEMENTATION. FOR EXAMPLE, A "STRONG" REACTION TO HCL AND A LOW SPT-N VALUE MAY INDICATE THAT THE SOIL PARTICLES ARE COATED WITH CALCIUM CARBONATE OR LIME BUT THE VOIDS ARE MOSTLY CLEAR, I.E. THE PARTICLES ARE NOT SIGNIFICANTLY CEMENTED TO EACH OTHER; THEREFORE, THE DENSITY IS LOOSE. IN OTHER CASES, SOIL MAY EXHIBIT "NO" TO "WEAK" REACTION TO HCL BUT APPEAR TO BE STRONGLY CEMENTED DUE TO INDURATION. THUS, THE USER SHOULD CONSIDER THE REPORTED REACTION TO HCL AND SPT-N VALUES IN CONJUNCTION WITH OTHER RELEVANT FACTORS TO EVALUATE THE DEGREE OF CEMENTATION AND ITS EFFECT ON CONSTRUCTION ACTIVITIES.

7. REFUSAL SPT-N VALUES MAY BE INDICATIVE OF THE PRESENCE OF COBBLES OR BOULDERS WHOSE SIZE CANNOT BE DETERMINED BY THE INVESTIGATIVE TECHNIQUES USED FOR THIS PROJECT. COBBLES AND BOULDERS WILL LIKELY BE ENCOUNTERED DURING THE CONSTRUCTION OF THE DRILLED SHAFTS. ADDITIONALLY, CEMENTED LAYERS MAY FORM COBBLE OR BOULDER SIZE PIECES WHEN BROKEN UP. THE CONTRACTOR SHOULD MOBILIZE THE APPROPRIATE EQUIPMENT FOR REMOVING THIS MATERIAL.

8. THE SITE SOILS CONTAIN RANDOM ZONES OF POORLY GRADED SANDS AND GRAVELS. THESE SOILS ARE PRONE TO CAVING. THEREFORE, LOCALIZED CAVING SHOULD BE ANTICIPATED DURING DRILLED SHAFT CONSTRUCTION. THESE LOCAL ZONES MAY BE UP TO 20-FT THICK AND CAN OCCUR AT VARIOUS DEPTHS.

9. THE SITE SOILS CONTAIN RANDOM ZONES OF GRAVELS, COBBLES AND BOULDERS. THESE MATERIALS EXPERIENCE LARGE FLUID LOSS DURING SLURRY-ASSISTED DRILLED SHAFT CONSTRUCTION.

OTHER TERMINOLOGY

QUANTITY:		REACTION TO HCL:	
TRACE	5%	NO REACTION	NO VISIBLE REACTION
FEW	5-10%	WEAK REACTION	SOME REACTION, WITH BUBBLES FORMING SLOWLY
LITTLE	15-25%		
SOME	30-45%	STRONG REACTION	VIOLENT REACTION, WITH BUBBLES FORMING IMMEDIATELY
MOSTLY	50%		

BORING PLAN

SCALE 1" = 100' (at 22" x 34")

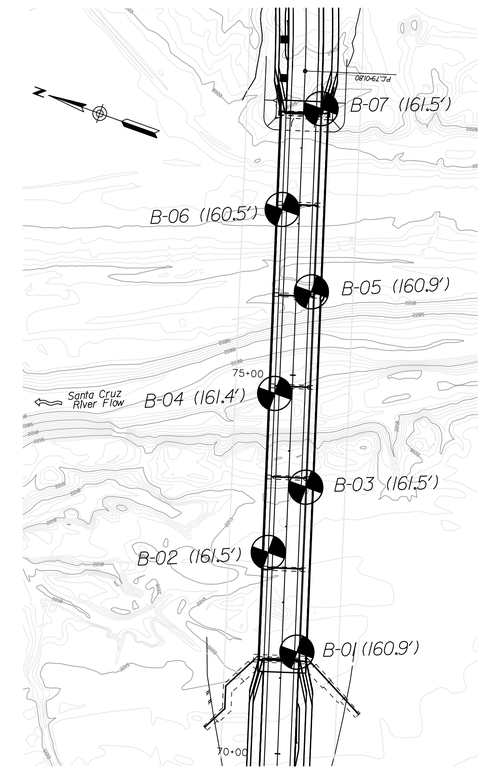

BORING LOCATION (DEPTH)

100' 0 100' 200'

Priscilla S. Cornelio, P.E., Director

Designed	K. WATTS	11/15
Drawn	K. WATTS	11/15
Checked	J. B. HARRIS	11/15
Proj. Engr.	J. B. HARRIS	11/15

No.	Revision Description	Engineer	Date

Registered Professional Engineer (Civil) CERTIFICATE NO. 57429 JOSEPH B. HARRIS Date Signed 11/12/15 ARIZONA U.S.A. Expires 06/30/17

SCE ENGINEERING 510 E 4TH STREET TUCSON, AZ 85705 520-405-7353

CALL TWO WORKING DAYS BEFORE YOU DIG 602-263-1100 1-800-STAKE-IT (OUTSIDE MARICOPA COUNTY)

Pima County Department of Transportation

FOUNDATION DATA
SUNSET ROAD - SEGMENT I
SILVERBELL RD. TO I-10

PROJECT NO. 4RTSUN

SUNSET ROAD - SILVERBELL ROAD TO I-10 - PROJECT NO. 4RTSUN

Scale: As Noted | Sheet SF01 of SF08 | Page 113 of 203

FILE NAME: C:\Users\jharris\SharePoint\T\Active\Sunset Road - Silverbell to River\CADD\NCS_FDS_01.dgn DATE: 11/12/2015 TIME: 3:20:21 PM

SCE BORING LOG: B-01 (1 of 2)

71+35, 20' Rt. (Ref. Al. Sunset CL, Seg. 1)
NORTHING: 75,963 EASTING: 67,893
ELEV.: 2,215.9 TOTAL DEPTH: 160.9

STARTED: 07/22/2014 10:25 AM
FINISHED: 07/23/2014 11:00 AM

CONTRACTOR: GSI
DRILLER: C. Fiesler
INSPECTOR: K. Watts
RIG TYPE: Truck mt. CME 75
DRILLING METHOD: 8" OD HSA
HAMMER TYPE: Auto Hammer
SCE PROJECT #: J2013-09

SAMPLER TYPES	Type	Symbol	Description	I.D.	O.D.	Length
	S		Split Spoon	1.375"	2"	18"
	R		Ring Sampler	2.5"	3"	18"
	U		Shelby Tube			

DEPTH (FT)	ELEV. (FT)	SAMPLE TYPE	SAMPLE SYMBOL	BLOWS	VISUAL SOIL IDENTIFICATION / DESCRIPTION AND REMARKS
	2215				SILTY, CLAYEY SAND (native), medium dense, dry to moist, brown, fine SAND, some low plasticity fines, few fine to coarse gravel, no cementation, strong reaction with HCl, max. particle size 1.5". (SC-SM)
5	2210	CU R		14-19	CLAYEY SAND WITH GRAVEL, medium dense, dry to moist, brown, fine to medium SAND, some fine to coarse gravel, little low plasticity fines, no cementation, strong reaction with HCl, max. particle size 1.5". (SC)
10	2205	S		3-7-9	POORLY-GRADED SAND WITH SILT, medium dense, dry to moist, light brown, fine to medium SAND, few nonplastic fines, trace fine subrounded to subangular gravel, no cementation, weak reaction with HCl, max. particle size 0.75". (SP-SM)
15	2200	CU S		3-4-5	Becomes loose, fine SAND.
20	2195	R		25-50/3	WELL-GRADED GRAVEL WITH SILT AND SAND, very dense, dry to moist, brown, fine to coarse rounded to subrounded GRAVEL, some fine to medium sand, few nonplastic fines, no cementation, weak reaction with HCl, max. particle size 1.25", noted 2.5" gravel in tip, probable cobbles. (GW-GM) Auger chatter and difficult drilling from 18' to 34'.
25	2190	S		23-32-25	Becomes dry, light brown, some fine to coarse sand, noted 3" gravel in cuttings.
30	2185	S		24-41-50/5	Becomes moist, redish brown.
35	2180	R		19-43	WELL-GRADED SAND WITH SILT AND GRAVEL, medium dense, moist, brown, fine to coarse SAND, some fine to coarse subrounded gravel, few nonplastic fines, no cementation, no reaction with HCl, max. particle size 1.5". (SW-SM)
40	2175	S		16-24-34	CLAYEY SAND WITH GRAVEL, very dense, moist, redish brown, fine to coarse SAND, little fine subrounded to subangular gravel, little low plasticity fines, no cementation, no reaction with HCl, max. particle size 0.5". (SC)
45	2170	S		10-20-30	Becomes dense, brown, little low to medium plasticity fines, max. particle size 0.25".
50	2165	R		27-46	Becomes some fine to coarse subrounded to subangular gravel, little medium plasticity fines, max. particle size 1".
55	2160	S		35-38-30	Becomes very dense, little fine subrounded to subangular gravel, little low plasticity fines, max. particle size 0.25".
60	2155	S		50/4	Becomes little fine to coarse subrounded to subangular gravel, max. particle size 1.5". Rock in sampler tip.
65	2150	R		22-52	WELL-GRADED SAND WITH SILT AND GRAVEL, dense, moist, brown, fine to coarse SAND, some fine to coarse subrounded to subangular gravel, few nonplastic fines, no cementation, no reaction with HCl, max. particle size 1.5". (SW-SM)
70	2145	S		20-22-35	CLAYEY SAND WITH GRAVEL, very dense, moist, brown, fine to coarse SAND, little fine subrounded to subangular gravel, little low plasticity fines, no cementation, no reaction with HCl, max. particle size 0.5". (SC)
75	2140	S		28-47-40	
80	2135	R		37-54	SILTY SAND WITH GRAVEL, dense, moist, brown, fine to coarse SAND, some fine to coarse subrounded to subangular gravel, little nonplastic fines, no cementation, no reaction with HCl, max. particle size 1". (SM)
85					CLAYEY SAND WITH GRAVEL, very dense, moist, brown, fine to

REPORT sce fds boring log - PROJECT sunset rd - silverbell rd to river rd.gpj - LIBRARY sce gintlib v2.1.gdb - LAST MOD 07/08/15 07:55 am - EXPORTED 11/02/15 04:51 pm

SCE BORING LOG: B-01 (2 of 2)

71+35, 20' Rt. (Ref. Al. Sunset CL, Seg. 1)
NORTHING: 75,963 EASTING: 67,893
ELEV.: 2,215.9 TOTAL DEPTH: 160.9

STARTED: 07/22/2014 10:25 AM
FINISHED: 07/23/2014 11:00 AM

CONTRACTOR: GSI
DRILLER: C. Fiesler
INSPECTOR: K. Watts
RIG TYPE: Truck mt. CME 75
DRILLING METHOD: 8" OD HSA
HAMMER TYPE: Auto Hammer
SCE PROJECT #: J2013-09

SAMPLER TYPES	Type	Symbol	Description	I.D.	O.D.	Length
	S		Split Spoon	1.375"	2"	18"
	R		Ring Sampler	2.5"	3"	18"
	U		Shelby Tube			

DEPTH (FT)	ELEV. (FT)	SAMPLE TYPE	SAMPLE SYMBOL	BLOWS	VISUAL SOIL IDENTIFICATION / DESCRIPTION AND REMARKS
	2130	S		28-34-35	coarse SAND, some fine subrounded to subangular gravel, little medium plasticity fines, no cementation, no reaction with HCl, max. particle size 0.75". (SC)
90	2125	S		34-38-43	Becomes little fine subrounded to subangular gravel, little low to medium plasticity fines, weak cementation, max. particle size 0.25". Added 10 gallons of water to boring at 90'.
95	2120	R		38-50/4	WELL-GRADED SAND WITH CLAY AND GRAVEL, very dense, moist, brown, fine to coarse SAND, some fine to coarse subrounded to subangular gravel, few low plasticity fines, weak cementation, no reaction with HCl, max. particle size 1.5". (SW-SC) Added 10 gallons of water to boring at 95'.
100	2115	S		23-42-32	Added 10 gallons of water to boring at 100'.
105	2110	S		31-48-32	Becomes some fine subrounded to subangular gravel, max. particle size 0.5". Added 10 gallons of water to boring at 105'.
110	2105	R		39-74	SILTY SAND WITH GRAVEL, dense, moist, brown, fine to coarse SAND, little fine subrounded to subangular gravel, little nonplastic fines, no cementation, no reaction with HCl, max. particle size 0.75". (SM) Added 10 gallons of water to boring at 110'.
115	2100	S		21-39-28	Becomes very dense, max. particle size 0.25". Added 10 gallons of water to boring at 115'.
120	2095	S		40-50/4	SILTY, CLAYEY SAND WITH GRAVEL, very dense, moist, brown, fine to coarse SAND, little fine to coarse subrounded to subangular gravel, little low plasticity fines, no cementation, no reaction with HCl, max. particle size 1". (SC-SM) Sampler bounced on rock/dense material. Added 10 gallons of water to boring at 120'.
125	2090	R		50/6	Sampler bounced on rock/dense material. Added 10 gallons of water to boring at 125'.
130	2085	S		25-17-12	CLAYEY GRAVEL WITH SAND, medium dense, moist, brown, fine to coarse subrounded to subangular GRAVEL, some fine to coarse sand, little low plasticity fines, no cementation, no reaction with HCl, max. particle size 1". (GC) Added 10 gallons of water to boring at 130'.
135	2080	S		34-44-50/5	Becomes very dense. Added 10 gallons of water to boring at 135'.
140	2075	R		37-50/3	CLAYEY SAND WITH GRAVEL, very dense, moist, brown, fine to coarse SAND, little fine to coarse subrounded to subangular gravel, little low plasticity fines, no cementation, no reaction with HCl, max. particle size 1.5". (SC) Added 10 gallons of water to boring at 140'.
145	2070	S		25-48-50/5	Becomes moist to wet, little fine subrounded to subangular gravel, little low to medium plasticity fines, max. particle size 0.25". Added 10 gallons of water to boring at 145'.
150	2065	S		16-36-32	Becomes max. particle size 0.5". Added 5 gallons of water to boring at 150'.
155	2060	S		19-45-50/3	Becomes wet, some fine to coarse subrounded to subangular gravel, max. particle size 1".
160	2055	S		44-50/5	Becomes little medium plasticity fines. End of boring at 160'. Stopped sampler at 160.9'. Groundwater encountered at 128'. Backfilled to 20' with cuttings and then grouted to surface.
165	2050				
170					

REPORT sce fds boring log - PROJECT sunset rd - silverbell rd to river rd.gpj - LIBRARY sce gintlib v2.1.gdb - LAST MOD 07/08/15 07:55 am - EXPORTED 11/02/15 04:51 pm

BORING PLAN

SCALE 1" = 100' (at 22" x 34")

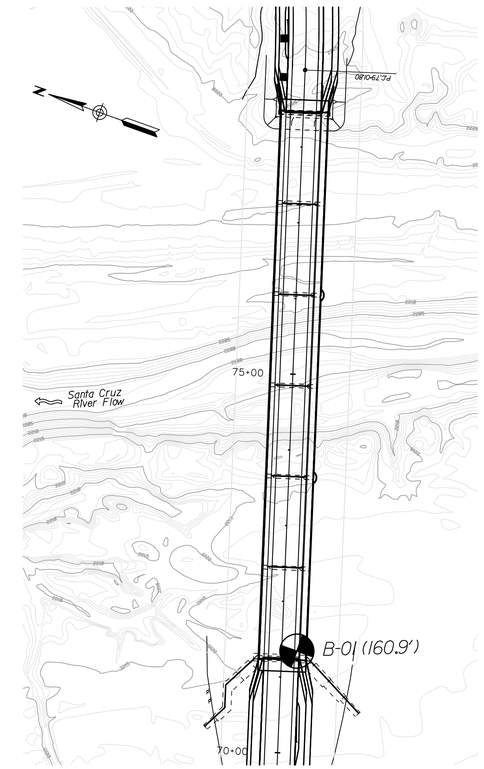

BORING LOCATION (DEPTH)

100' 0 100' 200'

GROUNDWATER DATA FOR B-01					
Date	Time	Water Depth (ft)	Casing Depth (ft)	Hole Depth (ft)	Symbol
07/23/14	11:50 AM	128.0	160.0	160.0	▽

Priscilla S. Cornelio, P.E., Director

		Date
Designed	K. WATTS	11/15
Drawn	K. WATTS	11/15
Checked	J. B. HARRIS	11/15
Proj. Engr.	J. B. HARRIS	11/15

No.	Revision Description	Engineer	Date

Registered Professional Engineer (Civil) CERTIFICATE NO. 57429 JOSEPH B. HARRIS Date Signed 11/12/15 ARIZONA U.S.A. Expires 06/30/17

SCE ENGINEERING 510 E. 4TH STREET TUCSON, AZ. 85705 520-409-7353

CALL TWO WORKING DAYS 602-263-1100 1-800-STAKE-IT (OUTSIDE MARICOPA COUNTY)

Pima County Department of Transportation

FOUNDATION DATA
SUNSET ROAD - SEGMENT 1
SILVERBELL RD. TO I-10

PROJECT NO. 4RTSUN

SUNSET ROAD - SILVERBELL ROAD TO I-10 - PROJECT NO. 4RTSUN

Scale:	As Noted	Sheet SF02 of SF08	Page 114 of 203

SCE BORING LOG: B-02 (1 of 2)

72+65, 23' Lt. (Ref. Al. Sunset CL, Seg. I)
NORTHING: 76,043 EASTING: 68,004
ELEV.: 2,216.5 TOTAL DEPTH: 161.5

STARTED: 08/06/2014 06:30 AM
FINISHED: 08/06/2014 03:30 PM

CONTRACTOR: GSI
DRILLER: C. Fiesler
INSPECTOR: K. Watts
RIG TYPE: Truck mt. CME 75
DRILLING METHOD: 8" OD HSA
HAMMER TYPE: Auto Hammer
SCE PROJECT #: J2013-09

SAMPLER TYPES	Type	Symbol	Description	I.D.	O.D.	Length
	S	☒	Split Spoon	1.375"	2"	18"
	R	■	Ring Sampler	2.5"	3"	18"
	U	▥	Shelby Tube			

DEPTH (FT)	ELEV. (FT)	SAMPLE TYPE	SAMPLE SYMBOL	BLOWS	VISUAL SOIL IDENTIFICATION / DESCRIPTION AND REMARKS
	2215				SILTY SAND (native), medium dense, dry, light brown, fine SAND, some nonplastic fines, few fine to coarse subrounded gravel, no cementation, weak reaction with HCl, max. particle size 1.5". (SM)
5	2210	CU S	☒	5-10-14	
10	2205	R	■	7-13	POORLY-GRADED SAND WITH SILT, loose, dry, light brown, fine to medium SAND, few fine to coarse subrounded gravel, few nonplastic fines, no cementation, no reaction with HCl, max. particle size 1". (SP-SM)
15	2200	CU S	☒	4-10-10	SILTY SAND, medium dense, dry, light brown, fine to medium SAND, little fine to coarse subrounded gravel, little nonplastic fines, no cementation, weak reaction with HCl, max. particle size 2.5". (SM)
20	2195	S	☒	16-14-14	Becomes few fine to coarse subrounded gravel, max. particle size 1.5".
25	2190	R	■	11-20	WELL-GRADED GRAVEL WITH SILT AND SAND, medium dense, dry, brown, fine to coarse subrounded GRAVEL, some fine to coarse sand, few nonplastic fines, no cementation, no reaction with HCl, max. particle size 1.5". (GW-GM) Auger chatter and difficult drilling from 21' to 33'. No recovery.
30	2185	S	☒	24-34-26	Becomes very dense.
35	2180	S	☒	42-37-37	CLAYEY SAND WITH GRAVEL, very dense, dry to moist, gray-brown, fine to coarse SAND, some fine to coarse subrounded to subangular gravel, little low plasticity fines, no cementation, no reaction with HCl, max. particle size 1.5". (SC)
40	2175	R	■	41-50/4	SILTY SAND WITH GRAVEL, very dense, moist, gray-brown, fine to coarse SAND, some fine to coarse subrounded to subangular gravel, little nonplastic fines, no cementation, no reaction with HCl, max. particle size 1", noted 2.5" gravel in cuttings, probable cobbles. (SM)
45	2170	S	☒	20-25-3	Becomes medium dense, some fine subrounded gravel, max. particle size 0.5".
50	2165	S	☒	15-14-20	CLAYEY SAND WITH GRAVEL, dense, moist, brown, fine to coarse SAND, some fine to coarse subrounded gravel, little low to medium plasticity fines, no cementation, no reaction with HCl, max. particle size 1". (SC)
55	2160	R	■	30-50/5	Becomes very dense, little medium plasticity fines.
60	2155	S	☒	22-18-26	Becomes dense, little low to medium plasticity fines, max. particle size 1.5".
65	2150	S	☒	26-44-45	Becomes very dense.
70	2145	R	■	31-55	WELL-GRADED SAND WITH CLAY AND GRAVEL, dense, moist, brown, fine to coarse SAND, little fine to coarse rounded to subrounded gravel, few low plasticity fines, no cementation, no reaction with HCl, max. particle size 1". (SW-SC)
75	2140	S	☒	17-50-38	Becomes very dense.
80	2135	S	☒	21-48-37	WELL-GRADED GRAVEL WITH SILTY CLAY AND SAND, very dense, moist, brown, fine rounded to subrounded GRAVEL, some fine to coarse sand, few low plasticity fines, no cementation, no reaction with HCl, max. particle size 0.25". (GW-GC)
85					

SCE BORING LOG: B-02 (2 of 2)

72+65, 23' Lt. (Ref. Al. Sunset CL, Seg. I)
NORTHING: 76,043 EASTING: 68,004
ELEV.: 2,216.5 TOTAL DEPTH: 161.5

STARTED: 08/06/2014 06:30 AM
FINISHED: 08/06/2014 03:30 PM

CONTRACTOR: GSI
DRILLER: C. Fiesler
INSPECTOR: K. Watts
RIG TYPE: Truck mt. CME 75
DRILLING METHOD: 8" OD HSA
HAMMER TYPE: Auto Hammer
SCE PROJECT #: J2013-09

SAMPLER TYPES	Type	Symbol	Description	I.D.	O.D.	Length
	S	☒	Split Spoon	1.375"	2"	18"
	R	■	Ring Sampler	2.5"	3"	18"
	U	▥	Shelby Tube			

DEPTH (FT)	ELEV. (FT)	SAMPLE TYPE	SAMPLE SYMBOL	BLOWS	VISUAL SOIL IDENTIFICATION / DESCRIPTION AND REMARKS
	2130	R	■	30-50/5	Becomes fine to coarse subrounded to subangular GRAVEL, max. particle size 1.5".
90	2125	S	☒	7-20-25	CLAYEY SAND WITH GRAVEL, dense, moist, brown, fine to coarse SAND, some fine subrounded to subangular gravel, little low plasticity fines, no cementation, no reaction with HCl, max. particle size 0.75". (SC)
95	2120	S	☒	24-34-31	Becomes very dense, little low to medium plasticity fines, max. particle size 0.5". Added 5 gallons of water to boring at 95'.
100	2115	R	■	18-47	SILTY SAND, medium dense, moist, brown, fine to coarse SAND, little fine subrounded to subangular gravel, little nonplastic fines, no cementation, no reaction with HCl, max. particle size 0.75". (SM) Added 5 gallons of water to boring at 100'.
105	2110	S	☒	40-39-41	CLAYEY SAND WITH GRAVEL, very dense, dry to moist, brown, fine to coarse SAND, some fine to coarse subrounded to subangular gravel, little low plasticity fines, no cementation, no reaction with HCl, max. particle size 1". (SC) Added 5 gallons of water to boring at 105'.
110	2105	S	☒	14-22-19	SILTY SAND, dense, moist, brown, fine to coarse SAND, little nonplastic fines, few fine subrounded to subangular gravel, no cementation, no reaction with HCl, max. particle size 0.25". (SM) Added 10 gallons of water to boring at 110'.
115	2100	R	■	24-60/5	WELL-GRADED SAND WITH SILTY CLAY AND GRAVEL, very dense, moist, brown, fine to coarse SAND, some fine to coarse subrounded to subangular gravel, few low plasticity fines, no cementation, no reaction with HCl, max. particle size 1". (SW-SC) Added 10 gallons of water to boring at 115'.
120	2095	S	☒	23-39-50/5	CLAYEY SAND WITH GRAVEL, very dense, moist, redish brown, fine to coarse SAND, some fine to coarse subrounded to subangular gravel, little low plasticity fines, no cementation, no reaction with HCl, max. particle size 1". (SC) Added 10 gallons of water to boring at 120'. Added 10 gallons of water to boring at 125'.
125	2090	S	☒	21-37-50/4	
130	2085	R	■	41-50/5	SILTY, CLAYEY SAND WITH GRAVEL, very dense, moist, redish brown, fine to coarse SAND, some fine to coarse subrounded to subangular gravel, little low plasticity fines, no cementation, no reaction with HCl, max. particle size 1". (SC-SM) Added 10 gallons of water to boring at 130'.
135	2080	S	☒	28-42-32	CLAYEY SAND WITH GRAVEL, very dense, moist, redish brown, fine to coarse SAND, little fine subrounded to subangular gravel, little low plasticity fines, no cementation, no reaction with HCl, max. particle size 0.25". (SC) Added 10 gallons of water to boring at 135'.
140	2075	S	☒	18-32-35	Becomes fine to medium SAND, little low to medium plasticity fines. Added 10 gallons of water to boring at 140'.
145	2070	R	■	30-50/4	▽ WELL-GRADED SAND WITH SILT AND GRAVEL, very dense, wet, brown, fine to coarse SAND, some fine to coarse subrounded to subangular gravel, little nonplastic fines, no cementation, no reaction with HCl, max. particle size 2.5". (SW-SM) Added 5 gallons of water to boring at 145'.
150	2065	S	☒	18-41-40	CLAYEY SAND WITH GRAVEL, very dense, wet, brown, fine to coarse SAND, little fine to coarse subrounded to subangular gravel, little low to medium plasticity fines, no cementation, no reaction with HCl, max. particle size 1". (SC)
155	2060	S	☒	30-48-50/5	Becomes moist to wet, some fine to coarse subrounded to subangular gravel, little low plasticity fines.
160	2055	S	☒	44-45-50	Becomes wet, max. particle size 1.5".
165	2050				End of boring at 160'. Stopped sampler at 161.5'. Groundwater encountered at 143.7'. Backfilled to 20' with cuttings and then grouted to surface.
170					

BORING PLAN

SCALE 1" = 100' (at 22" x 34")

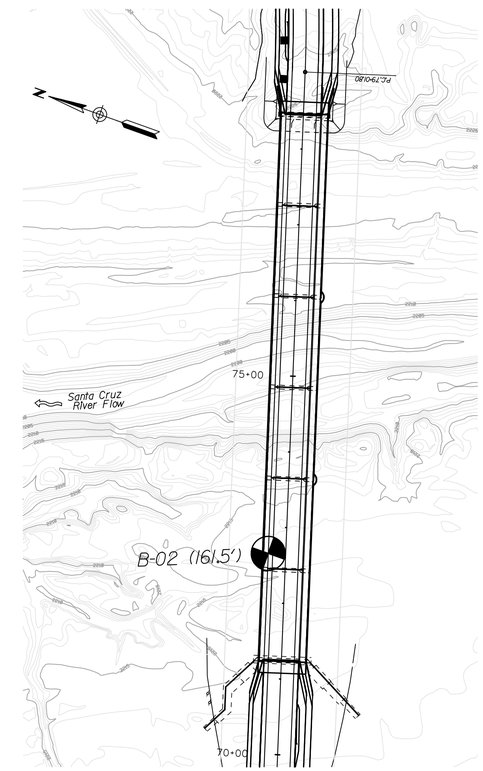

BORING LOCATION (DEPTH)

100' 0 100' 200'

GROUNDWATER DATA FOR B-02

Date	Time	Water Depth (ft)	Casing Depth (ft)	Hole Depth (ft)	Symbol
08/07/14	06:40 AM	143.7	160.0	160.0	▽

Pima County Department of Transportation

Priscilla S. Cornelio, P.E., Director

		Date
Designed	K. WATTS	11/15
Drawn	K. WATTS	11/15
Checked	J. B. HARRIS	11/15
Proj. Engr.	J. B. HARRIS	11/15

No.	Revision Description	Engineer	Date

Registered Professional Engineer (Civil) CERTIFICATE NO. 57429 JOSEPH B. HARRIS Date Signed 11/12/15 ARIZONA U.S.A. Expires 06/30/17

SCE ENGINEERING
510 E. 4TH STREET
TUCSON, AZ 85705
520-408-7533

CALL TWO WORKING DAYS BEFORE YOU DIG 602-263-1100 1-800-STAKE-IT (OUTSIDE MARICOPA COUNTY)

FOUNDATION DATA
SUNSET ROAD - SEGMENT I
SILVERBELL RD. TO I-10

PROJECT NO. 4RTSUN

SUNSET ROAD - SILVERBELL ROAD TO I-10 - PROJECT NO. 4RTSUN

Scale:	As Noted	Sheet SF03 of SF08	Page 115 of 203

FILE NAME: C:\Users\jharris\SharePoint\T\Active\Sunset Road - Silverbell to River\CADD\NCS_FDS_03.dgn

DATE: 11/12/2015 TIME: 3:19:00 PM

REPORT sce fds boring log - PROJECT sunset rd - silverbell rd to river rd.rpt - LIBRARY sce gintlib v2.1.glb - LAST MOD 07/08/13 07:55 am - EXPORTED 11/02/15 0451 pm

REPORT sce fds boring log - PROJECT sunset rd - silverbell rd to river rd.rpt - LIBRARY sce gintlib v2.1.glb - LAST MOD 07/08/13 07:55 am - EXPORTED 11/02/15 0451 pm

SCE BORING LOG: B-03 (1 of 2)

73+53, 23' Rt. (Ref. Al. Sunset CL, Seg. 1)
NORTHING: 76,025 EASTING: 68,102
ELEV.: 2,215.2 TOTAL DEPTH: 161.5

STARTED: 07/28/2014 06:40 AM
FINISHED: 07/28/2014 03:10 PM

CONTRACTOR: GSI
DRILLER: C. Fiesler
INSPECTOR: K. Watts
RIG TYPE: Truck mt. CME 75
DRILLING METHOD: 8" OD HSA
HAMMER TYPE: Auto Hammer
SCE PROJECT #: J2013-09

SAMPLER TYPES	Type	Symbol	Description	I.D.	O.D.	Length
	S		Split Spoon	1.375"	2"	18"
	R		Ring Sampler	2.5"	3"	18"
	U		Shelby Tube			

DEPTH (FT)	ELEV. (FT)	SAMPLE TYPE	BLOWS	VISUAL SOIL IDENTIFICATION / DESCRIPTION AND REMARKS
				CLAYEY SAND (native), dry, light brown, fine SAND, some low plasticity fines, little fine to coarse gravel, no cementation, weak reaction with HCl, max. particle size 1.5". (SC)
5	2210	CU R	5-9	SANDY SILTY CLAY, medium stiff, dry, light brown, low plasticity SILTY-CLAY, some fine sand, trace fine gravel, no cementation, weak reaction with HCl, max. particle size 0.25". (CL-ML)
10	2205	S	11-16-10	CLAYEY GRAVEL WITH SAND, medium dense, dry, light brown, fine to coarse subrounded GRAVEL, some fine to coarse sand, little low plasticity fines, no cementation, strong reaction with HCl, max. particle size 3". (GC)
15	2200	CU S	8-16-20	Becomes dense, probable cobbles.
20	2195	R	50/5	SILTY GRAVEL WITH SAND, very dense, dry to moist, brown, fine to coarse rounded to subrounded GRAVEL, some fine to coarse sand, little nonplastic fines, no cementation, strong reaction with HCl, max. particle size 2.5". (GM) No recovery.
25	2190	S	7-7-7	Auger chatter and difficult drilling from 18' to 33'. Noted 4" cobbles in cuttings. Becomes medium dense. No recovery.
30	2185	S	33-31-32	Becomes very dense.
35	2180	R	29-39	WELL-GRADED SAND WITH SILT AND GRAVEL, medium dense, dry to moist, olive brown, fine to coarse SAND, some fine to coarse subrounded to subangular gravel, few nonplastic fines, no cementation, no reaction with HCl, max. particle size 1". (SW-SM)
40	2175	S	14-11-10	CLAYEY SAND WITH GRAVEL, medium dense, moist, olive brown, fine to coarse SAND, little fine to coarse subrounded to subangular gravel, little low plasticity fines, no cementation, no reaction with HCl, max. particle size 1". (SC)
45	2170	S	25-46-50/5	Becomes very dense, max. particle size 1.5".
50	2165	R	35-39	WELL-GRADED SAND WITH SILT AND GRAVEL, dense, moist, brown, fine to coarse SAND, little fine subrounded to subangular gravel, few nonplastic fines, no cementation, no reaction with HCl, max. particle size 0.75". (SW-SM)
55	2160	S	21-32-50/5	CLAYEY SAND WITH GRAVEL, very dense, moist, brown, fine to coarse SAND, some fine subrounded to subangular gravel, little low plasticity fines, no cementation, no reaction with HCl, max. particle size 0.5". (SC)
60	2155	S	50/3	No recovery. Sampler bounced on rock/dense material.
65	2150	R	26-40	POORLY-GRADED SAND WITH SILT AND GRAVEL, medium dense, moist, dark brown, fine to coarse SAND, little fine subrounded to subangular gravel, few nonplastic fines, no cementation, no reaction with HCl, max. particle size 0.5". (SP-SM)
70	2145	S	20-38-49	SILTY, CLAYEY SAND WITH GRAVEL, very dense, moist, brown, fine to coarse SAND, little fine subrounded to subangular gravel, little low plasticity fines, no cementation, no reaction with HCl, max. particle size 0.25". (SC-SM)
75	2140	S	18-22-26	CLAYEY SAND WITH GRAVEL, dense, moist, brown, fine to coarse SAND, little fine subrounded to subangular gravel, little medium plasticity fines, no cementation, no reaction with HCl, max. particle size 0.75". (SC)
80	2135	R	50/5	WELL-GRADED SAND WITH CLAY AND GRAVEL, very dense, moist, brown, fine to coarse SAND, little fine to coarse subrounded to subangular gravel, few medium plasticity fines, no cementation, no reaction with HCl, max. particle size 1.5". (SW-SC) Added 5 gallons of water to boring at 80'.
85				

REPORT sce fds boring log - PROJECT sunset rd - silverbell rd to river rd.gpj - LIBRARY sce gintlib v2.1.glb - LAST MOD: 07/08/15 07:55 am - EXPORTED: 11/02/15 04:51 pm

SCE BORING LOG: B-03 (2 of 2)

73+53, 23' Rt. (Ref. Al. Sunset CL, Seg. 1)
NORTHING: 76,025 EASTING: 68,102
ELEV.: 2,215.2 TOTAL DEPTH: 161.5

STARTED: 07/28/2014 06:40 AM
FINISHED: 07/28/2014 03:10 PM

CONTRACTOR: GSI
DRILLER: C. Fiesler
INSPECTOR: K. Watts
RIG TYPE: Truck mt. CME 75
DRILLING METHOD: 8" OD HSA
HAMMER TYPE: Auto Hammer
SCE PROJECT #: J2013-09

SAMPLER TYPES	Type	Symbol	Description	I.D.	O.D.	Length
	S		Split Spoon	1.375"	2"	18"
	R		Ring Sampler	2.5"	3"	18"
	U		Shelby Tube			

DEPTH (FT)	ELEV. (FT)	SAMPLE TYPE	BLOWS	VISUAL SOIL IDENTIFICATION / DESCRIPTION AND REMARKS
		S	50/2	No recovery. Added 5 gallons of water to boring at 85'.
90	2125	S	23-21-20	SILTY SAND WITH GRAVEL, dense, moist, brown, fine to coarse SAND, little fine subrounded to subangular gravel, little low plasticity fines, no cementation, no reaction with HCl, max. particle size 0.5". (SM) Added 5 gallons of water to boring at 90'.
95	2120	R	11-38	SILTY, CLAYEY SAND WITH GRAVEL, medium dense, moist, brown, fine to coarse SAND, little fine subrounded to subangular gravel, little low plasticity fines, no cementation, no reaction with HCl, max. particle size 0.75". (SC-SM) Added 5 gallons of water to boring at 95'.
100	2115	S	27-50/2	Becomes very dense. Sampler bounced on rock/dense material. Added 5 gallons of water to boring at 100'.
105	2110	S	44-28-19	CLAYEY SAND WITH GRAVEL, dense, moist, brown, fine to coarse SAND, little fine to coarse subrounded to subangular gravel, little low to medium plasticity fines, no cementation, no reaction with HCl, max. particle size 1.5". (SC) Added 10 gallons of water to boring at 105'.
110	2105	R	50/3	Becomes very dense. No recovery. Sampler bounced on rock/dense material. Added 10 gallons of water to boring at 110'.
115	2100	S	31-44-44	Becomes some fine to coarse subrounded to subangular gravel, little low plasticity fines, max. particle size 1". Added 10 gallons of water to boring at 115'.
120	2095	S	29-42-44	Becomes some fine subrounded to subangular gravel, max. particle size 0.5". Added 10 gallons of water to boring at 120'.
125	2090	R	33-55	SILTY SAND WITH GRAVEL, dense, moist, brown, fine to coarse SAND, some fine to coarse subrounded to subangular gravel, little nonplastic fines, no cementation, no reaction with HCl, max. particle size 1". (SM) Added 10 gallons of water to boring at 125'.
130	2085	S	26-34-36	Becomes very dense, moist to wet, some fine subrounded to subangular gravel, max. particle size 0.25". Added 10 gallons of water to boring at 130'.
135	2080	S	24-33-39	CLAYEY SAND WITH GRAVEL, very dense, moist to wet, brown, fine to coarse SAND, some fine to coarse subrounded to subangular gravel, little low plasticity fines, no cementation, no reaction with HCl, max. particle size 1". (SC) Added 5 gallons of water to boring at 135'.
140	2075	R	50/5	Becomes little fine to coarse subrounded to subangular gravel, max. particle size 1.5". Added 5 gallons of water to boring at 140'.
145	2070	S	25-27-34	Becomes wet, little fine subrounded to subangular gravel, max. particle size 0.5".
150	2065	S	24-33-27	Becomes little fine to coarse subrounded to subangular gravel, max. particle size 1".
155	2060	R	43-50/4	SILTY SAND WITH GRAVEL, very dense, wet, brown, fine to coarse SAND, some fine to coarse subrounded to subangular gravel, little nonplastic fines, no cementation, no reaction with HCl, max. particle size 1.5". (SM)
160	2055	S	13-26-35	Becomes little fine subrounded to subangular gravel, max. particle size 0.25".
165	2050			End of boring at 160'. Stopped sampler at 161.5'. Groundwater encountered at 147'. Backfilled to 20' with cuttings and then grouted to surface.
170				

REPORT sce fds boring log - PROJECT sunset rd - silverbell rd to river rd.gpj - LIBRARY sce gintlib v2.1.glb - LAST MOD: 07/08/15 07:55 am - EXPORTED: 11/02/15 04:51 pm

BORING PLAN

SCALE 1" = 100' (at 22" x 34")

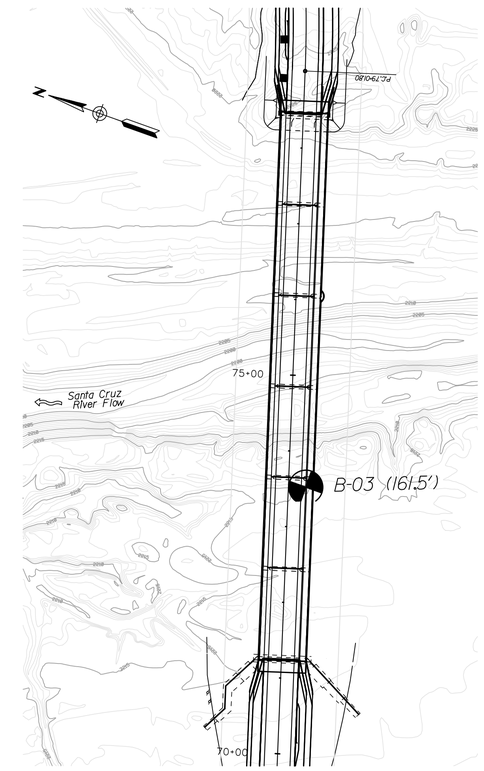

BORING LOCATION (DEPTH)

100' 0 100' 200'

GROUNDWATER DATA FOR B-03					
Date	Time	Water Depth (ft)	Casing Depth (ft)	Hole Depth (ft)	Symbol
07/29/14	06:30 AM	147.0	160.0	160.0	▽

Pima County Department of Transportation

Priscilla S. Cornelio, P.E., Director

No.	Revision Description	Engineer	Date

		Date
Designed	K. WATTS	11/15
Drawn	K. WATTS	11/15
Checked	J. B. HARRIS	11/15
Proj. Engr.	J. B. HARRIS	11/15

Registered Professional Engineer (Civil) CERTIFICATE NO. 57429 JOSEPH B. HARRIS Date Signed 11/12/15 ARIZONA U.S.A. Expires 06/30/17

SCE ENGINEERING 510 E. 4TH STREET TUCSON, AZ 85705 520-403-7253

CALL TWO WORKING DAYS BEFORE YOU DIG 602-263-1100 1-800-STAKE-IT (OUTSIDE MARICOPA COUNTY)

FOUNDATION DATA
SUNSET ROAD - SEGMENT I
SILVERBELL RD. TO I-10

PROJECT NO. 4RTSUN

SUNSET ROAD - SILVERBELL ROAD TO I-10 - PROJECT NO. 4RTSUN

Scale:	As Noted	Sheet SF04 of SF08	Page 116 of 203

FILE NAME: C:\Users\jharris\SharePoint\T\Active\Sunset Road - Silverbell to River\CADD\NCS_FDS_04.dgn

DATE: 11/12/2015 TIME: 3:18:27 PM

SCE BORING LOG: B-04 (1 of 2)

74+75, 23' Lt. (Ref. Al. Sunset CL, Seg. I)
NORTHING: 76,105 EASTING: 68,205
ELEV.: 2,200.6 TOTAL DEPTH: 161.4

STARTED: 07/30/2014 10:50 AM
FINISHED: 07/31/2014 03:15 PM

CONTRACTOR: GSI
DRILLER: G. Midkiff
INSPECTOR: K. Watts
RIG TYPE: Track mt. CME 75
DRILLING METHOD: 8" OD HSA
HAMMER TYPE: Auto Hammer
SCE PROJECT #: J2013-09

SAMPLER TYPES	Type	Symbol	Description	I.D.	O.D.	Length
	S	☒	Split Spoon	1.375"	2"	18"
	R	■	Ring Sampler	2.5"	3"	18"
	U	▥	Shelby Tube			

DEPTH (FT)	ELEV. (FT)	SAMPLE TYPE	SAMPLE SYMBOL	BLOWS	VISUAL SOIL IDENTIFICATION / DESCRIPTION AND REMARKS
	2200				SILTY SAND (native), medium dense, dry, light brown, fine SAND, some nonplastic fines, trace fine subrounded gravel, no cementation, strong reaction with HCl, max. particle size 0.75". (SM)
5	2195	CU S	☒	7-7-5	
10	2190	R	■	7-20	WELL-GRADED SAND, medium dense, moist, brown, fine to coarse SAND, few fine subrounded gravel, trace nonplastic fines, no cementation, no reaction with HCl, max. particle size 0.75". (SW)
15	2185	CU S	☒	7-12-11	SILTY SAND, medium dense, moist to wet, brown, fine to coarse SAND, little fine to coarse subrounded gravel, little nonplastic fines, no cementation, no reaction with HCl, max. particle size 1". (SM)
20	2180	S	☒	9-16-21	CLAYEY SAND WITH GRAVEL, dense, wet, redish brown, fine to coarse SAND, some fine to coarse subrounded to subangular gravel, little low plasticity fines, no cementation, no reaction with HCl, max. particle size 1.5". (SC)
25	2175	R	■	18-19	Becomes medium dense.
30	2170	S	☒	22-33-26	Becomes very dense, moist to wet, brown, little medium to high plasticity fines.
35	2165	S	☒	22-25-24	Becomes dense, little low plasticity fines, max. particle size 1".
40	2160	R	■	28-50/5	Becomes very dense, little medium plasticity fines, max. particle size 1.5".
45	2155	S	☒	34-35-32	
50	2150	S	☒	35-38-34	Becomes moist, little fine to coarse subrounded to subangular gravel, little low to medium plasticity fines, max. particle size 1".
55	2145	R	■	20-32	WELL-GRADED SAND WITH CLAY AND GRAVEL, medium dense, moist to wet, brown, fine to coarse SAND, some fine to coarse subrounded to subangular gravel, few low plasticity fines, no cementation, no reaction with HCl, max. particle size 1.5". (SW-SC)
60	2140	S	☒	16-19-22	CLAYEY SAND WITH GRAVEL, dense, moist to wet, brown, fine to coarse SAND, some fine to coarse subrounded to subangular gravel, little low to medium plasticity fines, no cementation, no reaction with HCl, max. particle size 1.5". (SC)
65	2135	S	☒	37-40-43	Becomes very dense.
70	2130	R	■	10-43	WELL-GRADED SAND WITH SILT AND GRAVEL, medium dense, moist to wet, brown, fine to coarse SAND, some fine to coarse subrounded to subangular gravel, few nonplastic fines, no cementation, no reaction with HCl, max. particle size 2.5". (SW-SM) Added 5 gallons of water to boring at 70'.
75	2125	S	☒	3-16-35	Becomes very dense, max. particle size 1". Added 5 gallons of water to boring at 75'.
80	2120	S	☒	30-33-35	CLAYEY SAND WITH GRAVEL, very dense, moist, brown, fine to coarse SAND, some fine to coarse subrounded to subangular gravel, little low to medium plasticity fines, no cementation, no reaction with HCl, max. particle size 1.5". (SC) Added 5 gallons of water to boring at 80'.
85					

SCE BORING LOG: B-04 (2 of 2)

74+75, 23' Lt. (Ref. Al. Sunset CL, Seg. I)
NORTHING: 76,105 EASTING: 68,205
ELEV.: 2,200.6 TOTAL DEPTH: 161.4

STARTED: 07/30/2014 10:50 AM
FINISHED: 07/31/2014 03:15 PM

CONTRACTOR: GSI
DRILLER: G. Midkiff
INSPECTOR: K. Watts
RIG TYPE: Track mt. CME 75
DRILLING METHOD: 8" OD HSA
HAMMER TYPE: Auto Hammer
SCE PROJECT #: J2013-09

SAMPLER TYPES	Type	Symbol	Description	I.D.	O.D.	Length
	S	☒	Split Spoon	1.375"	2"	18"
	R	■	Ring Sampler	2.5"	3"	18"
	U	▥	Shelby Tube			

DEPTH (FT)	ELEV. (FT)	SAMPLE TYPE	SAMPLE SYMBOL	BLOWS	VISUAL SOIL IDENTIFICATION / DESCRIPTION AND REMARKS
	2115	R	■	46-50/5	WELL-GRADED SAND WITH SILT AND GRAVEL, very dense, moist, brown, fine to coarse SAND, little fine to coarse subrounded to subangular gravel, few nonplastic fines, no cementation, no reaction with HCl, max. particle size 1". (SW-SM) Added 5 gallons of water to boring at 85'.
90	2110	S	☒	20-26-29	CLAYEY SAND WITH GRAVEL, very dense, moist, brown, fine to coarse SAND, little fine subrounded to subangular gravel, little low plasticity fines, no cementation, no reaction with HCl, max. particle size 0.5". (SC) Added 5 gallons of water to boring at 90'.
95	2105	S	☒	36-40-45	Becomes some fine subrounded to subangular gravel, little low to medium plasticity fines, max. particle size 0.75". Added 5 gallons of water to boring at 95'.
100	2100	R	■	32-93	SILTY SAND WITH GRAVEL, very dense, moist, brown, fine to coarse SAND, some fine subrounded to subangular gravel, little nonplastic fines, no cementation, no reaction with HCl, max. particle size 0.75". (SM) Added 5 gallons of water to boring at 100'.
105	2095	S	☒	41-50/5	CLAYEY SAND WITH GRAVEL, very dense, moist, brown, fine to coarse SAND, little fine subrounded to subangular gravel, little low to medium plasticity fines, no cementation, no reaction with HCl, max. particle size 0.25". (SC) Added 5 gallons of water to boring at 105'. Added 5 gallons of water to boring at 110'.
110	2090	S	☒	22-25-32	
115	2085	R	■	32-46	SILTY, CLAYEY SAND WITH GRAVEL, dense, moist to wet, brown, fine to coarse SAND, some fine to coarse subrounded gravel, little low plasticity fines, no cementation, no reaction with HCl, max. particle size 1". (SC-SM) Added 5 gallons of water to boring at 115'.
120	2080	S	☒	43-45-50/5	Becomes very dense, some fine subrounded gravel, max. particle size 0.75".
125	2075	S	☒	27-34-44	
130	2070	R	■	43-60/5	SILTY SAND WITH GRAVEL, very dense, moist, brown, fine to coarse SAND, little fine subrounded gravel, little nonplastic fines, no cementation, no reaction with HCl, max. particle size 0.75". (SM) Added 5 gallons of water at each sample interval down augers from 130' to end of boring to reduce heaving of materials into auger flights.
135	2065	S	☒	28-35-43	Becomes wet, little fine to coarse subrounded to subangular gravel, max. particle size 1.5".
140	2060	S	☒	27-35-15	CLAYEY SAND WITH GRAVEL, dense, wet, brown, fine to coarse SAND, little fine subrounded to subangular gravel, little low plasticity fines, no cementation, no reaction with HCl, max. particle size 0.5". (SC)
145	2055	R	▬	50/5	Becomes very dense. No recovery.
150	2050	S	☒	33-42-50/5	Becomes little medium plasticity fines.
155	2045	S	☒	28-19-46	Becomes some fine to coarse subrounded to subangular gravel, little low to medium plasticity fines, max. particle size 1".
160	2040	S	☒	25-36-50/5	Becomes little fine subrounded to subangular gravel, little medium plasticity fines, max. particle size 0.75".
165	2035				End of boring at 160'. Stopped sampler at 161.4'. Groundwater encountered at 118'. Backfilled to 20' with cuttings and then grouted to surface.
170					

BORING PLAN

SCALE 1" = 100' (at 22" x 34")

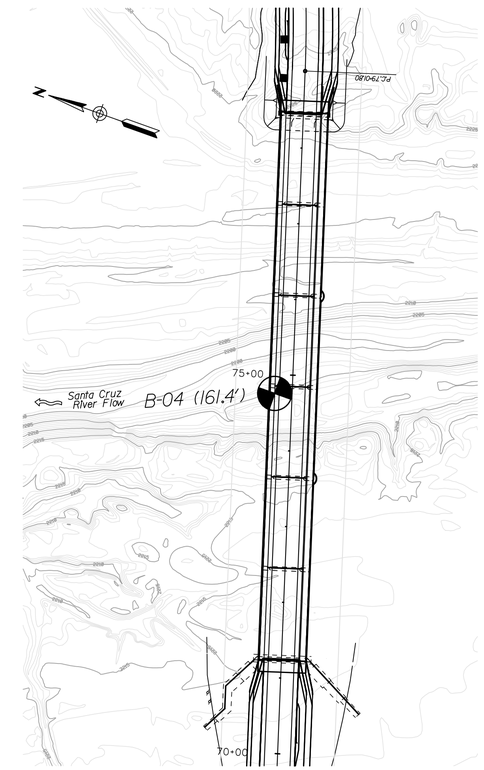

BORING LOCATION (DEPTH)

100' 0 100' 200'

GROUNDWATER DATA FOR B-04

Date	Time	Water Depth (ft)	Casing Depth (ft)	Hole Depth (ft)	Symbol
07/31/14	03:15 PM	120.0	160.0	160.0	▽
08/01/14	06:30 AM	118.0	160.0	160.0	▼

Priscilla S. Cornelio, P.E., Director

		Date
Designed	K. WATTS	11/15
Drawn	K. WATTS	11/15
Checked	J. B. HARRIS	11/15
Proj. Engr.	J. B. HARRIS	11/15

No.	Revision Description	Engineer	Date

Registered Professional Engineer (Civil) CERTIFICATE NO. 57429 JOSEPH B. HARRIS Date Signed 11/12/15 ARIZONA U.S.A. Expires 06/30/17

SCE ENGINEERING 510 E 4TH STREET TUCSON, AZ 85705 520-405-7353

CALL TWO WORKING DAYS 602-263-1100 1-800-STAKE-IT (OUTSIDE MARICOPA COUNTY)

Pima County Department of Transportation

FOUNDATION DATA
SUNSET ROAD - SEGMENT I
SILVERBELL RD. TO I-10

PROJECT NO. 4RTSUN

SUNSET ROAD - SILVERBELL ROAD TO I-10 - PROJECT NO. 4RTSUN

Scale: As Noted | Sheet SF05 of SF08 | Page 117 of 203

REPORT sce fds boring log - PROJECT sunset rd - silverbell rd to river rd.gpj - LIBRARY sce gintlib v2.1.glb - LAST MOD 07/08/15 07:55 am - EXPORTED 11/02/15 04:51 pm

FILE NAME: C:\Users\jharris\SharePoint\T\Active\Sunset Road - Silverbell to River\CADD\NCS_FDS_05.dgn

DATE: 11/12/2015 TIME: 3:17:07 PM

SCE BORING LOG: B-05 (1 of 2)

76+11, 20' Rt. (Ref. Al. Sunset CL, Seg. I)
NORTHING: 76,104 EASTING: 68,347
ELEV.: 2,211.1 TOTAL DEPTH: 160.9

STARTED: 08/04/2014 09:35 AM
FINISHED: 08/05/2014 01:45 PM

CONTRACTOR: GSI
DRILLER: G. Midkiff
INSPECTOR: K. Watts
RIG TYPE: Track mt. CME 75
DRILLING METHOD: 8" OD HSA
HAMMER TYPE: Auto Hammer
SCE PROJECT #: J2013-09

SAMPLER TYPES	Type	Symbol	Description	I.D.	O.D.	Length
	S		Split Spoon	1.375"	2"	18"
	R		Ring Sampler	2.5"	3"	18"
	U		Shelby Tube			

DEPTH (FT)	ELEV. (FT)	SAMPLE TYPE	SAMPLE BLOWS	VISUAL SOIL IDENTIFICATION / DESCRIPTION AND REMARKS
	2210			SILTY SAND (native), medium dense, dry, light brown, fine SAND, some nonplastic fines, trace fine to coarse subrounded to subangular gravel, no cementation, strong reaction with HCl, max. particle size 1.5". (SM)
5	2205	CU R	12-20	
10	2200	S	5-6-10	Becomes SILTY SAND WITH GRAVEL, moist, brown, fine to coarse SAND, little fine to coarse subrounded gravel.
15	2195	CU S	16-14-17	Becomes dense, redish brown, noted 3" gravel in cuttings, probable cobbles. Rock in sampler tip.
20	2190	R	10-23	POORLY-GRADED SAND WITH GRAVEL, medium dense, moist, brown, fine to coarse SAND, some fine to coarse subrounded gravel, trace nonplastic fines, no cementation, no reaction with HCl, max. particle size 1.5". (SP)
25	2185	S	27-23-21	SILTY, CLAYEY GRAVEL WITH SAND, dense, dry to moist, brown, fine to coarse subrounded to subangular GRAVEL, some fine to coarse sand, little low plasticity fines, no cementation, no reaction with HCl, max. particle size 1.5", noted 3" gravel in cuttings, probable cobbles. (GC-GM) Added 5 gallons of water to boring at 25'.
30	2180	S	41-29-50/5	CLAYEY SAND WITH GRAVEL, very dense, moist, redish brown, fine to coarse SAND, some fine subrounded gravel, little low to medium plasticity fines, no cementation, no reaction with HCl, max. particle size 0.5". (SC) Added 5 gallons of water to boring at 30'.
35	2175	R	24-55	CLAYEY GRAVEL WITH SAND, dense, moist, redish brown, fine to coarse subrounded GRAVEL, some fine to coarse sand, little low plasticity fines, no cementation, no reaction with HCl, max. particle size 2", probable cobbles. (GC) Added 5 gallons of water to boring at 35'.
40	2170	S	31-19-27	CLAYEY SAND WITH GRAVEL, dense, moist, redish brown, fine to coarse SAND, some fine to coarse subrounded gravel, little medium plasticity fines, no cementation, no reaction with HCl, max. particle size 1.5". (SC) Added 5 gallons of water to boring at 40'. Becomes brown, some fine subrounded gravel, little low to medium plasticity fines, max. particle size 0.5". Added 5 gallons of water to boring at 45'.
45	2165	S	11-15-26	
50	2160	R	32-36	
55	2155	S	33-35-31	CLAYEY GRAVEL WITH SAND, medium dense, moist, brown, fine to coarse subrounded GRAVEL, some fine to coarse sand, little medium plasticity fines, no cementation, weak reaction with HCl, max. particle size 1". (GC) Added 5 gallons of water to boring at 50'. Becomes very dense, little low plasticity fines. Added 5 gallons of water to boring at 55'.
60	2150	S	24-39-46	CLAYEY SAND WITH GRAVEL, very dense, moist, brown, fine to coarse SAND, some fine to coarse subrounded gravel, little low plasticity fines, no cementation, no reaction with HCl, max. particle size 1.5". (SC) Added 5 gallons of water to boring at 60'. Becomes little fine to coarse subrounded to subangular gravel, little medium plasticity fines. Added 5 gallons of water to boring at 65'.
65	2145	R	33-65/5	
70	2140	S	33-36-45	Becomes little fine subrounded to subangular gravel, max. particle size 0.25". Added 5 gallons of water to boring at 70'.
75	2135	S	27-33-42	Becomes some fine subrounded to subangular gravel, little low to medium plasticity fines, max. particle size 0.75". Added 5 gallons of water to boring at 75'.
80	2130	R	42-50/4	SILTY SAND WITH GRAVEL, very dense, moist, brown, fine to coarse SAND, little fine to coarse subrounded to subangular gravel, little nonplastic fines, no cementation, no reaction with HCl, max. particle size 1.5". (SM) Added 5 gallons of water to boring at 80'.
85				

REPORT sce fds boring log - PROJECT sunset rd - silverbell rd to river rd.gpj - LIBRARY sce gintlib v2.1.gdb - LAST MOD 07/08/15 07:55 am - EXPORTED 11/02/15 04:51 pm

SCE BORING LOG: B-05 (2 of 2)

76+11, 20' Rt. (Ref. Al. Sunset CL, Seg. I)
NORTHING: 76,104 EASTING: 68,347
ELEV.: 2,211.1 TOTAL DEPTH: 160.9

STARTED: 08/04/2014 09:35 AM
FINISHED: 08/05/2014 01:45 PM

CONTRACTOR: GSI
DRILLER: G. Midkiff
INSPECTOR: K. Watts
RIG TYPE: Track mt. CME 75
DRILLING METHOD: 8" OD HSA
HAMMER TYPE: Auto Hammer
SCE PROJECT #: J2013-09

SAMPLER TYPES	Type	Symbol	Description	I.D.	O.D.	Length
	S		Split Spoon	1.375"	2"	18"
	R		Ring Sampler	2.5"	3"	18"
	U		Shelby Tube			

DEPTH (FT)	ELEV. (FT)	SAMPLE TYPE	SAMPLE BLOWS	VISUAL SOIL IDENTIFICATION / DESCRIPTION AND REMARKS
	2125	S	31-34-40	SILTY, CLAYEY GRAVEL WITH SAND, very dense, moist, brown, fine to coarse subrounded to subangular GRAVEL, some fine to coarse sand, little low plasticity fines, no cementation, no reaction with HCl, max. particle size 1.5". (GC-GM) Added 5 gallons of water to boring at 85'. Becomes max. particle size 1". Added 5 gallons of water to boring at 90'.
90	2120	S	28-31-38	
95	2115	R	28-42	WELL-GRADED SAND WITH SILT AND GRAVEL, dense, moist, brown, fine to coarse SAND, little fine to coarse subrounded to subangular gravel, few nonplastic fines, no cementation, no reaction with HCl, max. particle size 1.5". (SW-SM) Added 5 gallons of water to boring at 95'.
100	2110	S	50/4	CLAYEY SAND, very dense, dry to moist, brown, fine to coarse SAND, little low plasticity fines, few fine subrounded to subangular gravel, no cementation, strong reaction with HCl, max. particle size 0.25". (SC) Sampler bounced on rock/dense material. Added 5 gallons of water to boring at 100'.
105	2105	S	50/5	Becomes CLAYEY SAND WITH GRAVEL, moist, little fine subrounded to subangular gravel, weak reaction with HCl, max. particle size 0.5". Added 10 gallons of water to boring at 105'.
110	2100	R	65/3	Becomes little fine subrounded gravel, strong reaction with HCl. Added 10 gallons of water to boring at 110'.
115	2095	S	50/5	Becomes little medium plasticity fines, max. particle size 0.25". Added 10 gallons of water to boring at 115'.
120	2090	S	50/5	Added 10 gallons of water to boring at 120'.
125	2085	R	100/5	Becomes CLAYEY SAND, few fine to coarse subrounded gravel, little low plasticity fines, max. particle size 1". Added 10 gallons of water to boring at 125'.
130	2080	S	50/6	Becomes CLAYEY SAND WITH GRAVEL, some fine to coarse subrounded to subangular gravel, little low to medium plasticity fines. Added 10 gallons of water to boring at 130'.
135	2075	S	28-50/5	Becomes little fine to coarse subrounded to subangular gravel. Added 10 gallons of water to boring at 135'.
140	2070	R	32-50/3	POORLY-GRADED SAND WITH SILTY CLAY AND GRAVEL, very dense, wet, brown, fine to coarse SAND, little fine to coarse subrounded gravel, few low plasticity fines, no cementation, strong reaction with HCl, max. particle size 1.5". (SP-SC)
145	2065	S	28-32-50/4	CLAYEY SAND WITH GRAVEL, very dense, moist to wet, brown, fine to coarse SAND, little fine subrounded to subangular gravel, little medium plasticity fines, no cementation, weak reaction with HCl, max. particle size 0.5". (SC)
150	2060	S	50/5	Becomes strong reaction with HCl.
155	2055	S	22-34-50	Becomes little fine to coarse subrounded to subangular gravel, weak reaction with HCl, max. particle size 1".
160	2050	S	38-50/5	End of boring at 160'. Stopped sampler at 160.9'. Groundwater encountered at 142'. Backfilled to 20' with cuttings and then grouted to surface.
165	2045			
170				

REPORT sce fds boring log - PROJECT sunset rd - silverbell rd to river rd.gpj - LIBRARY sce gintlib v2.1.gdb - LAST MOD 07/08/15 07:55 am - EXPORTED 11/02/15 04:51 pm

BORING PLAN

SCALE 1" = 100' (at 22" x 34")

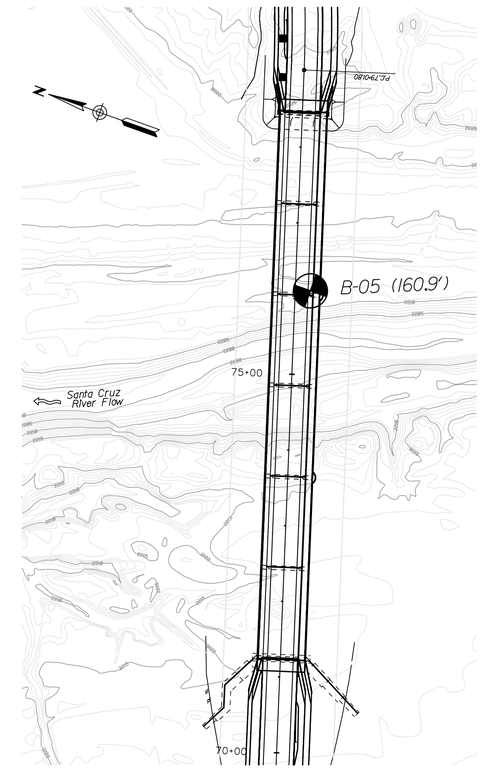

BORING LOCATION (DEPTH)

100' 0 100' 200'

GROUNDWATER DATA FOR B-05					
Date	Time	Water Depth (ft)	Casing Depth (ft)	Hole Depth (ft)	Symbol
08/06/14	07:00 AM	142.0	160.0	160.0	▽

Priscilla S. Cornelio, P.E., Director

	K. WATTS	11/15
Designed	K. WATTS	11/15
Drawn	K. WATTS	11/15
Checked	J. B. HARRIS	11/15
Proj. Engr.	J. B. HARRIS	11/15

No.	Revision Description	Engineer	Date

Registered Professional Engineer (Civil) CERTIFICATE NO. 57429 JOSEPH B. HARRIS Date Signed 11/12/15 ARIZONA U.S.A. Expires 06/30/17

SCE ENGINEERING 510 E 4TH STREET TUCSON, AZ 85705 520-405-7353

CALL TWO WORKING DAYS BEFORE YOU DIG 602-263-1100 1-800-STAKE-IT (OUTSIDE MARICOPA COUNTY)

SUNSET ROAD - SILVERBELL ROAD TO I-10 - PROJECT NO. 4RTSUN

Pima County Department of Transportation

FOUNDATION DATA
SUNSET ROAD - SEGMENT I
SILVERBELL RD. TO I-10

PROJECT NO. 4RTSUN

Scale:	As Noted	Sheet SF06 of SF08	Page 118 of 203

SCE BORING LOG: B-06 (1 of 2)

77+18, 23' Lt. (Ref. Al. Sunset CL, Seg. I)
NORTHING: 76,177 EASTING: 68,437
ELEV.: 2,214.7 TOTAL DEPTH: 160.5

STARTED: 07/24/2014 07:00 AM
FINISHED: 07/25/2014 07:45 AM

CONTRACTOR: GSI
DRILLER: C. Fiesler
INSPECTOR: K. Watts
RIG TYPE: Truck mt. CME 75
DRILLING METHOD: 8" OD HSA
HAMMER TYPE: Auto Hammer
SCE PROJECT #: J2013-09

SAMPLER TYPES	Type	Symbol	Description	I.D.	O.D.	Length
	S		Split Spoon	1.375"	2"	18"
	R		Ring Sampler	2.5"	3"	18"
	U		Shelby Tube			

DEPTH (FT)	ELEV. (FT)	SAMPLE TYPE	SAMPLE SYMBOL	BLOWS	VISUAL SOIL IDENTIFICATION / DESCRIPTION AND REMARKS
					LEAN CLAY WITH SAND (native), very stiff, dry, light brown, medium plasticity CLAY, little fine sand, weak cementation, strong reaction with HCl. (CL)
5	2210	CU S		6-8-10	
10	2205	S		4-11-23	Becomes hard.
					POORLY-GRADED SAND WITH SILT AND GRAVEL, dense, dry, dark brown, fine to medium SAND, little fine subrounded to subangular gravel, few low plasticity fines, no cementation, strong reaction with HCl, max. particle size 0.5". (SP-SM)
15	2200	CU R		11-56	
					SANDY LEAN CLAY, very stiff, moist, brown, medium plasticity CLAY, some fine to coarse sand, few fine to coarse subrounded to subangular gravel, no cementation, strong reaction with HCl, max. particle size 1.5". (CL) Auger chatter and difficult drilling from 18' to 34'. Noted 2" gravel in cuttings, probable cobbles.
20	2195	S		17-13-14	
					SILTY, CLAYEY SAND WITH GRAVEL, medium dense, moist, olive brown, fine to medium SAND, little fine subrounded gravel, little low plasticity fines, no cementation, no reaction with HCl, max. particle size 0.5". (SC-SM)
25	2190	S		3-2-1	
					No recovery. Becomes very loose. Becomes very dense. No recovery. Sampler bounced on rock/dense material. Noted 2" gravel in cuttings, probable cobbles.
30	2185	R		50/1	
					CLAYEY GRAVEL WITH SAND, dense, moist, brown, fine to coarse rounded to subrounded GRAVEL, some fine to coarse sand, little low plasticity fines, no cementation, no reaction with HCl, max. particle size 1". (GC) Noted 3" gravel in cuttings, probable cobbles.
35	2180	S		21-20-22	
40	2175	S		33-26-24	
					SILTY SAND WITH GRAVEL, dense, moist, brown, fine to coarse SAND, some fine rounded to subrounded gravel, little nonplastic fines, no cementation, no reaction with HCl, max. particle size 0.75". (SM)
45	2170	R		49-53	
					WELL-GRADED SAND WITH CLAY AND GRAVEL, dense, dry to moist, brown, fine to coarse SAND, little fine subrounded gravel, few low plasticity fines, no cementation, no reaction with HCl, max. particle size 0.5". (SW-SC)
50	2165	S		14-23-24	
					CLAYEY SAND WITH GRAVEL, very dense, moist, brown, fine to coarse SAND, some fine subrounded gravel, little low to medium plasticity fines, no cementation, no reaction with HCl, max. particle size 0.5". (SC)
55	2160	S		20-30-32	
60	2155	R		10-30	Becomes medium dense, some fine to coarse rounded to subrounded gravel, little medium plasticity fines, max. particle size 1". Added 5 gallons of water to boring at 60'.
65	2150	S		22-32-26	Becomes very dense, some fine to coarse subrounded gravel, little low plasticity fines. Added 5 gallons of water to boring at 65'.
70	2145	S		29-30-30	Added 5 gallons of water to boring at 70'. Auger chatter and difficult drilling from 72' to 88', probable cobbles.
75	2140	R		43-50/5	CLAYEY GRAVEL WITH SAND, very dense, moist, brown, fine to coarse subrounded GRAVEL, some fine to coarse sand, little low plasticity fines, no cementation, no reaction with HCl, max. particle size 2.5". (GC) Added 5 gallons of water to boring at 75'.
80	2135	S		25-28-50/5	CLAYEY SAND WITH GRAVEL, very dense, moist, brown, fine to coarse SAND, little fine subrounded gravel, little low plasticity fines, no cementation, no reaction with HCl, max. particle size 0.25". (SC) Added 5 gallons of water to boring at 80'.
85	2130				

SCE BORING LOG: B-06 (2 of 2)

77+18, 23' Lt. (Ref. Al. Sunset CL, Seg. I)
NORTHING: 76,177 EASTING: 68,437
ELEV.: 2,214.7 TOTAL DEPTH: 160.5

STARTED: 07/24/2014 07:00 AM
FINISHED: 07/25/2014 07:45 AM

CONTRACTOR: GSI
DRILLER: C. Fiesler
INSPECTOR: K. Watts
RIG TYPE: Truck mt. CME 75
DRILLING METHOD: 8" OD HSA
HAMMER TYPE: Auto Hammer
SCE PROJECT #: J2013-09

SAMPLER TYPES	Type	Symbol	Description	I.D.	O.D.	Length
	S		Split Spoon	1.375"	2"	18"
	R		Ring Sampler	2.5"	3"	18"
	U		Shelby Tube			

DEPTH (FT)	ELEV. (FT)	SAMPLE TYPE	SAMPLE SYMBOL	BLOWS	VISUAL SOIL IDENTIFICATION / DESCRIPTION AND REMARKS
		S		13-36-40	Added 5 gallons of water to boring at 85'.
90	2125	R		33-50/3	SILTY SAND WITH GRAVEL, very dense, moist, brown, fine to coarse SAND, some fine to coarse subrounded gravel, little nonplastic fines, no cementation, no reaction with HCl, max. particle size 1.5". (SM) Added 5 gallons of water to boring at 90'.
95	2120	S		16-18-44	Becomes max. particle size 1". Added 5 gallons of water to boring at 95'.
					WELL-GRADED GRAVEL WITH SILT AND SAND, very dense, moist, brown, fine to coarse subrounded to subangular GRAVEL, some fine to coarse sand, few nonplastic fines, no cementation, no reaction with HCl, max. particle size 1.5". (GW-GM) Added 5 gallons of water to boring at 100'.
100	2115	S		30-41-50/4	
105	2110	R		50/1	Sampler bounced on rock/dense material. Noted 2" gravel in sampler shoe, probable cobbles. Added 5 gallons of water to boring at 105'.
					CLAYEY SAND WITH GRAVEL, very dense, moist, brown, fine to coarse SAND, some fine to coarse subrounded to subangular gravel, little low plasticity fines, no cementation, strong reaction with HCl, max. particle size 1". (SC) Sampler bounced on rock/dense material. Added 5 gallons of water to boring at 110'.
110	2105	S		34-50/4	
115	2100	S		46-50/3	Becomes CLAYEY SAND, few fine subrounded to subangular gravel, max. particle size 0.25". Added 5 gallons of water to boring at 115'.
120	2095	R		50/3	Becomes CLAYEY SAND WITH GRAVEL, some low plasticity fines, little fine to coarse subrounded to subangular gravel, max. particle size 1.5".
125	2090	S		50/4	Sampler bounced on rock/dense material. Added 10 gallons of water to boring at 120'.
					WELL-GRADED SAND WITH SILTY CLAY, very dense, moist, brown, fine to coarse SAND, few fine subrounded to subangular gravel, few low plasticity fines, no cementation, strong reaction with HCl, max. particle size 0.25". (SW-SC) Added 10 gallons of water to boring at 125'. Becomes max. particle size 0.75". Added 5 gallons of water to boring at 130'.
130	2085	S		50/5	
135	2080	R		90/6	CLAYEY SAND WITH GRAVEL, very dense, moist to wet, brown, fine to coarse SAND, little fine to coarse subrounded to subangular gravel, little low plasticity fines, no cementation, strong reaction with HCl, max. particle size 1.5". (SC) Added 10 gallons of water to boring at 135'. Becomes some fine subrounded to subangular gravel, little low to medium plasticity fines, max. particle size 0.75".
140	2075	S		44-50/5	
145	2070	S		37-50/4	Becomes little low plasticity fines.
					WELL-GRADED GRAVEL WITH SILTY CLAY AND SAND, very dense, moist to wet, brown, fine to coarse subrounded GRAVEL, some fine to coarse sand, few low plasticity fines, no cementation, strong reaction with HCl, max. particle size 1.5". (GW-GC)
150	2065	R		100/5	
155	2060	S		50/5	
160	2055	S		73/6	Becomes wet.
					End of boring at 160'. Stopped sampler at 160.5'. Groundwater encountered at 136.5'. Backfilled to 20' with cuttings and then grouted to surface.
165	2050				
170	2045				

BORING PLAN

SCALE 1" = 100' (at 22" x 34")

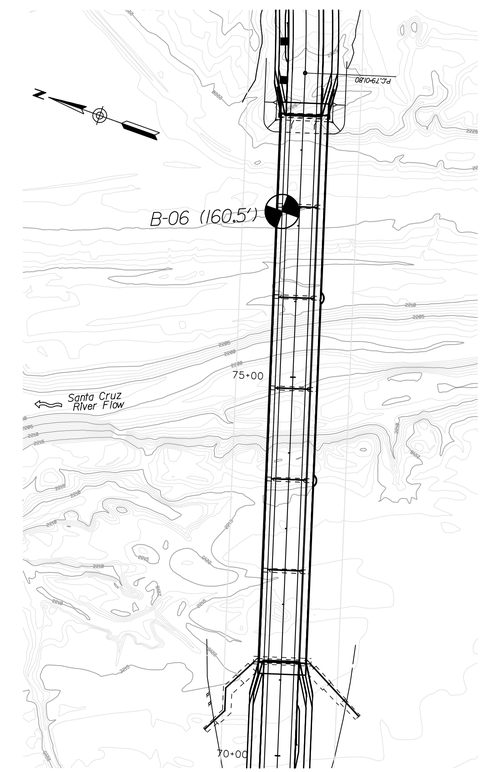

BORING LOCATION (DEPTH)

100' 0 100' 200'

GROUNDWATER DATA FOR B-06

Date	Time	Water Depth (ft)	Casing Depth (ft)	Hole Depth (ft)	Symbol
07/25/14	06:50 AM	136.5	145.0	145.0	▽

Pima County Department of Transportation

Priscilla S. Cornelio, P.E., Director

Designed	K. WATTS	Date 11/15
Drawn	K. WATTS	11/15
Checked	J. B. HARRIS	11/15
Proj. Engr.	J. B. HARRIS	11/15

No.	Revision Description	Engineer	Date

Registered Professional Engineer (Civil) CERTIFICATE NO. 57429 JOSEPH B. HARRIS Date Signed 11/12/15 ARIZONA U.S.A. Expires 06/30/17

SCE ENGINEERING 510 E. 4TH STREET TUCSON, AZ. 85705 520-408-7333

CALL TWO WORKING DAYS 602-263-1100 1-800-STAKE-IT (OUTSIDE MARICOPA COUNTY)

FOUNDATION DATA
SUNSET ROAD - SEGMENT I
SILVERBELL RD. TO I-10

PROJECT NO. 4RTSUN

SUNSET ROAD - SILVERBELL ROAD TO I-10 - PROJECT NO. 4RTSUN

Scale: As Noted | Sheet SF07 of SF08 | Page 119 of 203

FILE NAME: C:\Users\jharris\SharePoint\T\Active\Sunset Road - Silverbell to River\CADD\NCS_FDS_07.dgn

DATE: 11/12/2015 TIME: 3:15:24 PM

REPORT sce fds boring log - PROJECT sunset rd - silverbell rd to river rd.gpj - LIBRARY sce glmlib v2.1.glb - LAST MOD 07/06/15 07:55 am - EXPORTED 11/02/15 04:52 pm

SCE BORING LOG: B-07 (1 of 2)

78+53, 23' Rt. (Ref. Al. Sunset CL, Seg. I)
NORTHING: 76,173 EASTING: 68,579
ELEV.: 2,223.0 TOTAL DEPTH: 161.5

STARTED: 07/21/2014 06:50 AM
FINISHED: 07/21/2014 03:30 PM

CONTRACTOR: GSI
DRILLER: C. Fiesler
INSPECTOR: K. Watts
RIG TYPE: Truck mt. CME 75
DRILLING METHOD: 8" OD HSA
HAMMER TYPE: Auto Hammer
SCE PROJECT #: J2013-09

SAMPLER TYPES	Type	Symbol	Description	I.D.	O.D.	Length
	S		Split Spoon	1.375"	2"	18"
	R		Ring Sampler	2.5"	3"	18"
	U		Shelby Tube			

DEPTH (FT)	ELEV. (FT)	SAMPLE TYPE	SAMPLE BLOWS	VISUAL SOIL IDENTIFICATION / DESCRIPTION AND REMARKS
	2220			SANDY LEAN CLAY (native), very stiff, dry, light brown, low plasticity CLAY, some fine to medium sand, trace fine gravel, no cementation, strong reaction with HCl, max. particle size 0.75". (CL)
5		CU S	9-13-14	
	2215			
10		R	17-34	Becomes medium plasticity CLAY, some fine to coarse sand, few fine gravel, weak cementation.
	2210			
15		CU S	2-12-15	Becomes moist, dark brown, few fine to coarse gravel, no reaction with HCl, max. particle size 1.5".
	2205			
20		S	4-8-11	WELL-GRADED GRAVEL WITH SAND, medium dense, dry, light brown, fine to coarse subrounded to subangular GRAVEL, little fine to coarse sand, trace nonplastic fines, no cementation, no reaction with HCl, max. particle size 3". (GW) Auger chatter and difficult drilling from 18' to 43', probable cobbles.
	2200			
25		R	18-50	
	2195			
30		S	12-6-11	POORLY-GRADED GRAVEL WITH SAND, medium dense, dry, light brown, fine to coarse subrounded to subangular GRAVEL, some fine to coarse sand, trace nonplastic fines, no cementation, no reaction with HCl, max. particle size 1.5". (GP)
	2190			
35		S	50/5	Becomes very dense, max. particle size 1". Sampler bounced on rock/dense material.
	2185			
40		R	50/4	No recovery. Sampler bounced on rock/dense material.
	2180			
45		S	15-31-25	CLAYEY SAND WITH GRAVEL, very dense, moist, brown, fine to coarse SAND, some fine to coarse subrounded gravel, little low to medium plasticity fines, no cementation, weak reaction with HCl, max. particle size 1.5". (SC) Noted 4.5" cobble in cuttings.
	2175			
50		S	15-33-35	Becomes little medium plasticity fines, max. particle size 1". Noted 3" gravel in cuttings.
	2170			
55		R	50/4	Becomes max. particle size 2".
	2165			
60		S	34-41-46	Becomes max. particle size 1.5".
	2160			
65		S	26-28-37	Becomes little fine subrounded to subangular gravel, max. particle size 0.25".
	2155			
70		R	31-50/4	WELL-GRADED SAND WITH SILT AND GRAVEL, very dense, moist, black and brown, fine to coarse SAND, some fine to coarse subrounded gravel, few nonplastic fines, no cementation, no reaction with HCl, max. particle size 1". (SW-SM)
	2150			
75		S	23-26-30	CLAYEY SAND WITH GRAVEL, very dense, moist, brown, fine to coarse SAND, little fine subrounded gravel, little low to medium plasticity fines, weak cementation, no reaction with HCl, max. particle size 0.5". (SC)
	2145			
80		S	25-22-19	SILTY SAND WITH GRAVEL, dense, moist, brown, fine to coarse SAND, little fine subrounded gravel, little low plasticity fines, no cementation, no reaction with HCl, max. particle size 0.5". (SM)
	2140			
85				

REPORT sce fds boring log - PROJECT sunset rd - silverbell rd to river rd.ggi - LIBRARY sce glmtb v2.1.glb - LAST MOD 07/08/15 07:55 am - EXPORTED 11/02/15 14:53 pm

SCE BORING LOG: B-07 (2 of 2)

78+53, 23' Rt. (Ref. Al. Sunset CL, Seg. I)
NORTHING: 76,173 EASTING: 68,579
ELEV.: 2,223.0 TOTAL DEPTH: 161.5

STARTED: 07/21/2014 06:50 AM
FINISHED: 07/21/2014 03:30 PM

CONTRACTOR: GSI
DRILLER: C. Fiesler
INSPECTOR: K. Watts
RIG TYPE: Truck mt. CME 75
DRILLING METHOD: 8" OD HSA
HAMMER TYPE: Auto Hammer
SCE PROJECT #: J2013-09

SAMPLER TYPES	Type	Symbol	Description	I.D.	O.D.	Length
	S		Split Spoon	1.375"	2"	18"
	R		Ring Sampler	2.5"	3"	18"
	U		Shelby Tube			

DEPTH (FT)	ELEV. (FT)	SAMPLE TYPE	SAMPLE BLOWS	VISUAL SOIL IDENTIFICATION / DESCRIPTION AND REMARKS
	2135	R	28-47	Becomes little nonplastic fines, max. particle size 0.75".
90				
	2130	S	24-36-43	CLAYEY SAND WITH GRAVEL, very dense, moist, brown, fine to coarse SAND, little fine subrounded gravel, little low to medium plasticity fines, no cementation, no reaction with HCl, max. particle size 0.25". (SC)
95		S	36-45-38	Becomes CLAYEY SAND, few fine subrounded gravel.
	2125			
100		R	50/5	WELL-GRADED SAND WITH SILT AND GRAVEL, very dense, moist, brown, fine to coarse SAND, some fine to coarse subrounded gravel, few nonplastic fines, no cementation, no reaction with HCl, max. particle size 1.5". (SW-SM) Auger chatter and difficult drilling from 98' to 108'.
	2120			
105		S	34-50/4	Added 10 gallons of water to boring at 105'.
	2115			
110		S	30-50/4	CLAYEY SAND WITH GRAVEL, very dense, dry to moist, light brown, fine to coarse SAND, little fine subrounded gravel, little low to medium plasticity fines, no cementation, strong reaction with HCl, max. particle size 0.5". (SC) Added 10 gallons of water to boring at 110'.
	2110			
115		R	49-50/1	Becomes moist, little fine to coarse subrounded gravel, little low plasticity fines, weak reaction with HCl, max. particle size 1". Sampler bounced on rock/dense material. Added 10 gallons of water to boring at 115'.
	2105			
120		S	36-50/2	Becomes little fine subrounded gravel, strong reaction with HCl, max. particle size 0.25". Added 10 gallons of water to boring at 120'.
	2100			
125		S	38-50/5	SILTY SAND WITH GRAVEL, very dense, moist, light brown, fine to coarse SAND, little fine subrounded gravel, little low plasticity fines, no cementation, strong reaction with HCl, max. particle size 0.25". (SM) Added 10 gallons of water to boring at 125'.
	2095			
130		R	45-50/2	Becomes some fine to coarse subrounded gravel, little nonplastic fines, max. particle size 2.5". Added 10 gallons of water to boring at 130'.
	2090			
135		S	50/5	CLAYEY SAND WITH GRAVEL, very dense, moist, light brown, fine to coarse SAND, little fine subrounded gravel, little low plasticity fines, no cementation, strong reaction with HCl, max. particle size 0.5". (SC) Added 10 gallons of water to boring at 135'.
	2085			
140		S	40-50/3	Becomes max. particle size 0.25". Added 10 gallons of water to boring at 140'.
	2080			
145		S	38-50/4	Becomes CLAYEY SAND, few fine subrounded gravel, weak cementation. Added 10 gallons of water to boring at 145'.
	2075			
150		S	50/3	No recovery. Added 10 gallons of water to boring at 150'.
	2070			
155		S	32-50/4	Becomes CLAYEY SAND WITH GRAVEL, moist to wet, little fine subrounded to subangular gravel, weak reaction with HCl.
	2065			
160		S	16-26-36	Becomes wet, little fine to coarse subrounded to subangular gravel, max. particle size 1".
	2060			
165				End of boring at 160'. Stopped sampler at 161.5'. Groundwater encountered at 149'. Backfilled to 20' with cuttings and then grouted to surface.
	2055			
170				

REPORT sce fds boring log - PROJECT sunset rd - silverbell rd to river rd.ggi - LIBRARY sce glmtb v2.1.glb - LAST MOD 07/08/15 07:55 am - EXPORTED 11/02/15 14:53 pm

BORING PLAN

SCALE 1" = 100' (at 22" x 34")

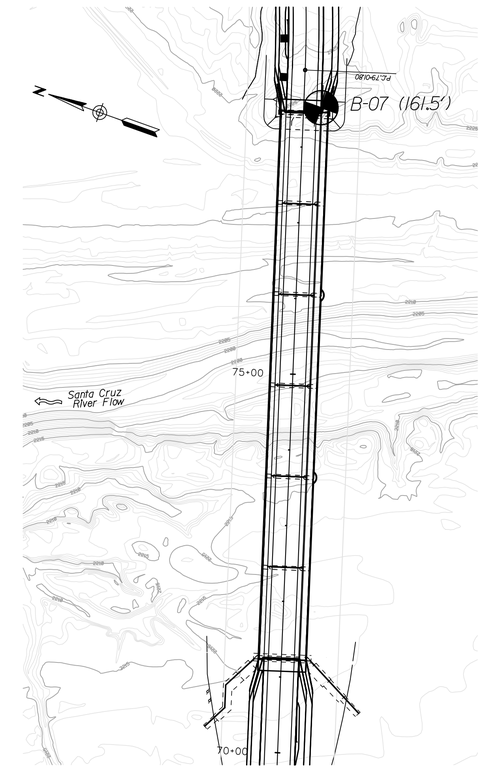

BORING LOCATION (DEPTH)

100' 0 100' 200'

GROUNDWATER DATA FOR B-07

Date	Time	Water Depth (ft)	Casing Depth (ft)	Hole Depth (ft)	Symbol
07/22/14	06:30 AM	149.0	160.0	160.0	▽

Priscilla S. Cornelio, P.E., Director

		Date
Designed	K. WATTS	11/15
Drawn	K. WATTS	11/15
Checked	J. B. HARRIS	11/15
Proj. Engr.	J. B. HARRIS	11/15

No.	Revision Description	Engineer	Date

Registered Professional Engineer (Civil) CERTIFICATE NO. 57429 JOSEPH B. HARRIS Date Signed 11/12/15 ARIZONA U.S.A. Expires 06/30/17

SCE ENGINEERING 510 E. 4TH STREET TUCSON, AZ 85705 520-403-7253

CALL TWO WORKING DAYS BEFORE YOU DIG 602-263-1100 1-800-STAKE-IT (OUTSIDE MARICOPA COUNTY)

SUNSET ROAD - SILVERBELL ROAD TO I-10 - PROJECT NO. 4RTSUN

Pima County Department of Transportation

FOUNDATION DATA
SUNSET ROAD - SEGMENT I
SILVERBELL RD. TO I-10

PROJECT NO. 4RTSUN

Scale:	As Noted	Sheet SF08 of SF08	Page 120 of 203

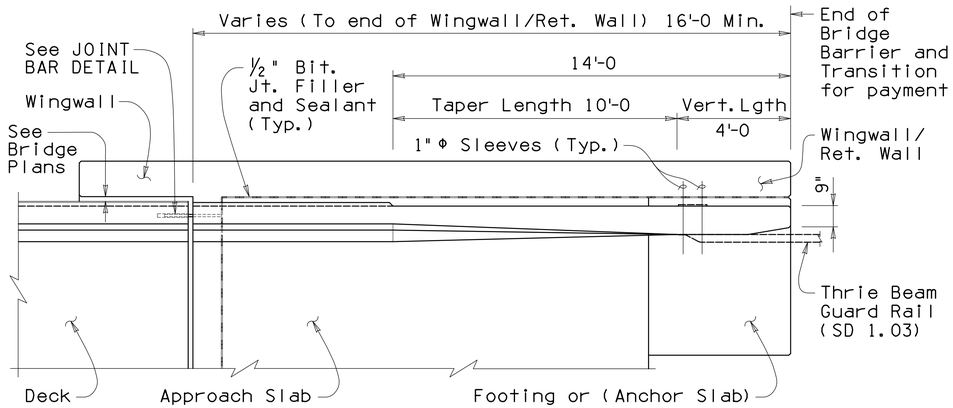

PLAN

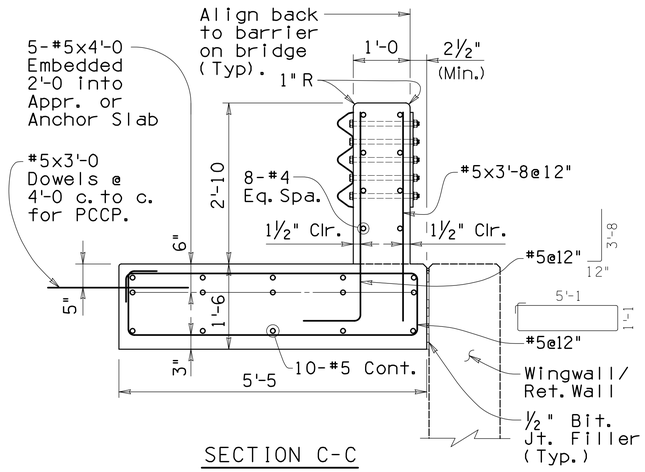

SECTION C-C

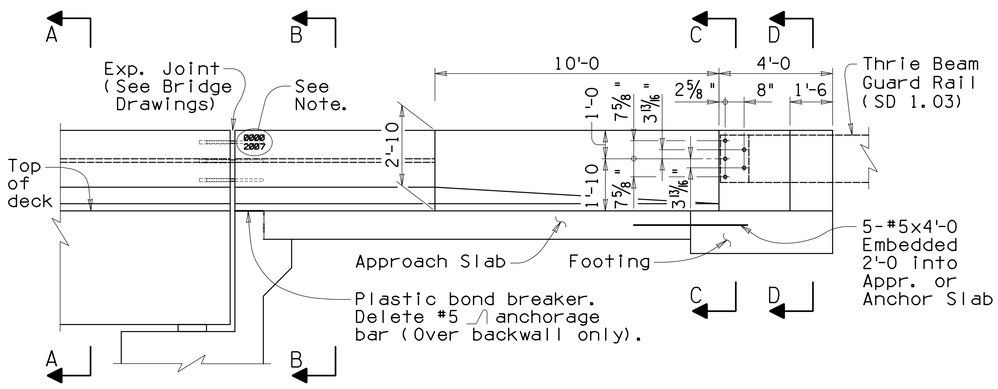

ELEVATION

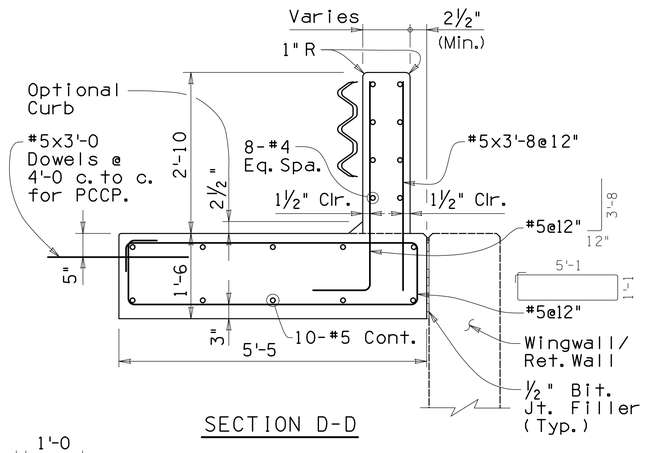

SECTION D-D

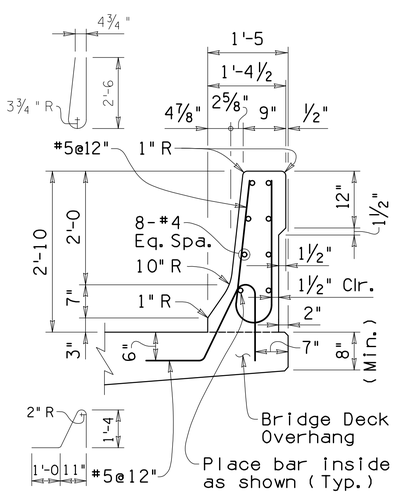

SECTION A-A

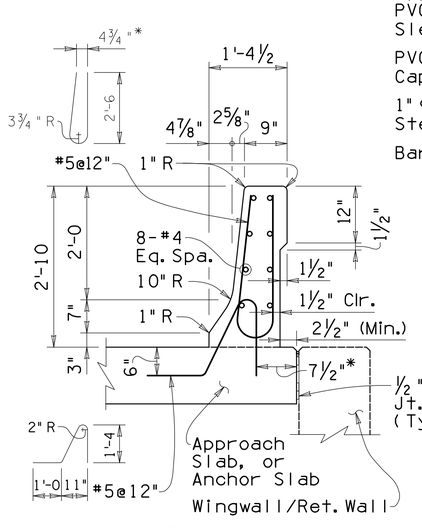

SECTION B-B

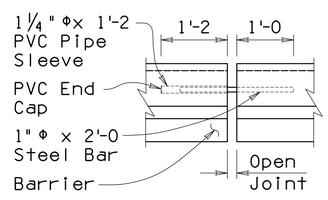

JOINT BAR DETAIL

*Varies at taper length

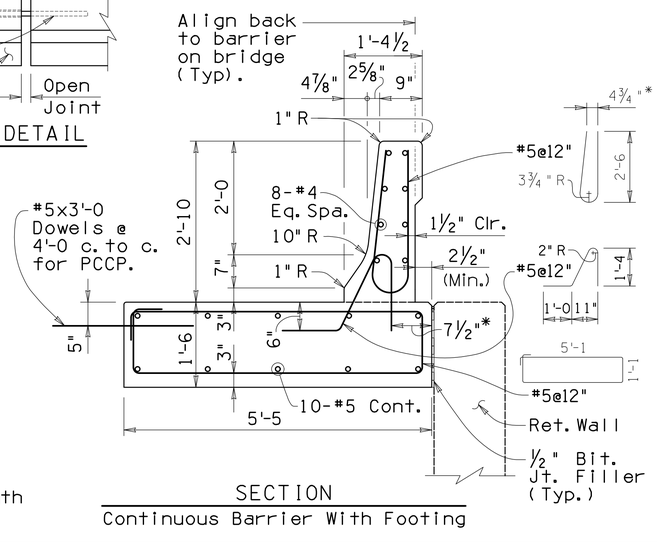

SECTION
Continuous Barrier With Footing

GENERAL NOTES:

Construction Specification - Arizona Department of Transportation Standard Specifications for Road and Bridge Construction, latest Edition.

Design Specifications - AASHTO LRFD Bridge Design Specifications, 6th Edition 2012.

This barrier has been successfully crash tested and is structurally evaluated as meeting the requirements of NCHRP Report 350 Test Level 4.

All Concrete shall be Class "S" (f'c = 4000 psi).

Reinforcing steel shall conform to ASTM Specification A615. All reinforcing shall be furnished as Grade 60. All reinforcing shall be epoxy coated at locations above EL. 4000 ft.

All bends and hooks shall meet the requirements of AASHTO LRFD Article 5.10. All bend dimensions for reinforcing steel shall be out-to-out of bars. All placement dimensions for reinforcing steel shall be to center of bars unless noted otherwise.

All reinforcing steel shall have 2 inch clear cover unless noted otherwise.

Concrete barriers on continuous superstructures shall have ½" bituminous joint filler in open joints over piers. See bridge drawings for details.

Imbed ½", Bridge Number and Year Built, using 1½"w x 2"h number impressions in concrete, located as shown at the approach end of the outside lane.

Anchorage bars are included in the pay item for barrier (Item No. 6011140).

Omit bridge barrier transition when concrete barrier is continuous beyond bridge.

Dimensions shall not be scaled from drawings.

Item No. 6011140 F-SHAPE BRIDGE CONCRETE BARRIER AND TRANSITION (34")
Measure: Linear Foot

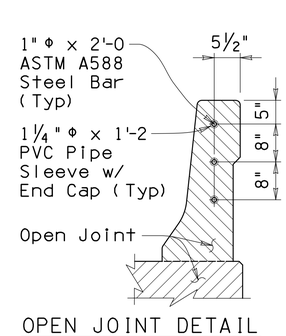

OPEN JOINT DETAIL
At Expansion Joints

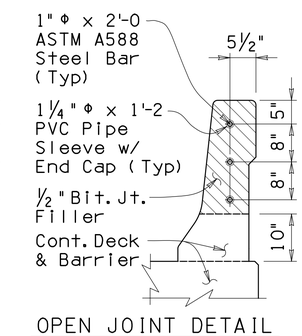

OPEN JOINT DETAIL
Over Continuous Piers

NO	DESCRIPTION OF REVISIONS	MADE BY	DATE
1	Original Issue	S.U.H.	8-99
5	General Update	S.U.H.	11-07
6	General Update, Title Block	S.U.H.	3-09
7	Title Block, Item No. and Description	S.U.H.	6-12

Note to Designer:
The information presented in this Standard Detail has been prepared in accordance with recognized engineering principles and is for general use. It should not be used for specific application without competent professional examination and verification of its suitability and applicability by a licensed professional engineer. Contents within the inner border line shall not be altered.

CHIEF ENGINEER: Shafi U. Hasan	ARIZONA DEPARTMENT OF TRANSPORTATION INTERMODAL TRANSPORTATION DIVISION BRIDGE GROUP STRUCTURE DETAIL
APPROVED FOR PUBLICATION: Jean A. Nehme	F-SHAPE BRIDGE CONCRETE BARRIER AND TRANSITION (34")

ROUTE	PROJECT NO.	FA NO.	DRAWING NO.
LOCATION			SD 1.01
			SHEET NO. 121 OF 203

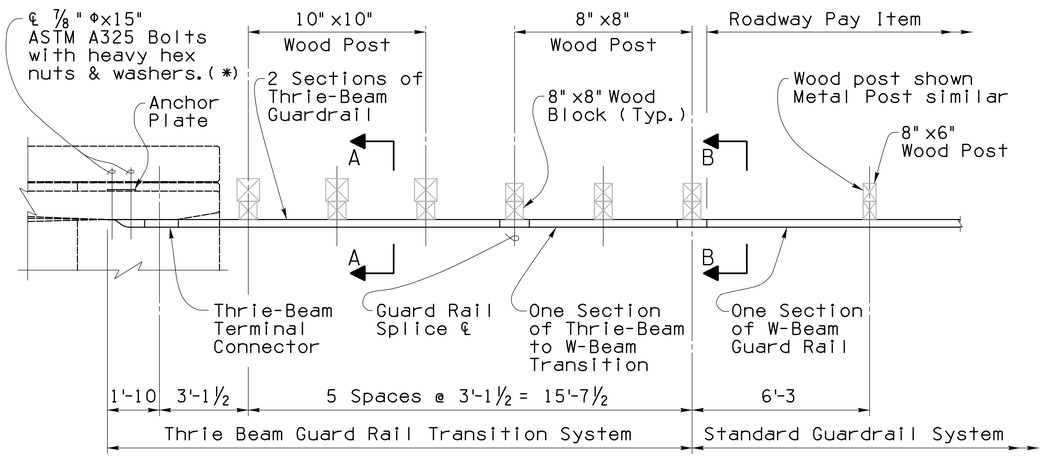

PLAN

(*) 7/8" Φx17" bolts for 44" F-Shape barrier transition.

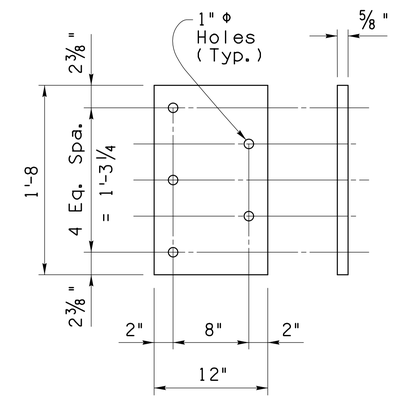

ANCHOR PLATE

GENERAL NOTES:

Thrie Beam Transition Hardware provided is per AASHTO-AGC-ARTBA Joint Committee Task Force 13 Report.

Structural steel shall conform to ASTM Specification A36 unless noted otherwise.

Anchor plates, terminal connectors and thrie beams shall be galvanized after fabrication in accordance with ASTM A123 unless noted otherwise. All bolts, nuts and washers shall be galvanized in accordance with the requirements of ASTM A153.
At the contractors option, stainless steel bolts and washers may be used. They shall conform to or exceed the mechanical requirements of ASTM A325.
Provide additional washers, as needed, for longer bolt length.

Overlap of the terminal connector, thrie beam, transition and guardrails shall be in the direction of the adjacent traffic lane.

Dimensions shall not be scaled from drawings.

Item No. 9050430 THRIE BEAM GUARD RAIL TRANSITION SYSTEM

Measure: Each

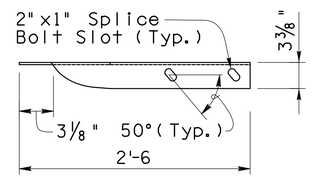

TOP VIEW

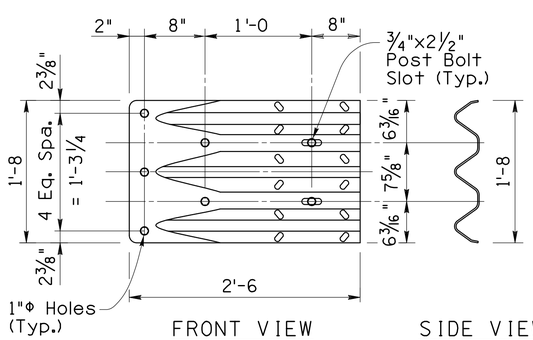

FRONT VIEW SIDE VIEW

THRIE BEAM TERMINAL CONNECTOR

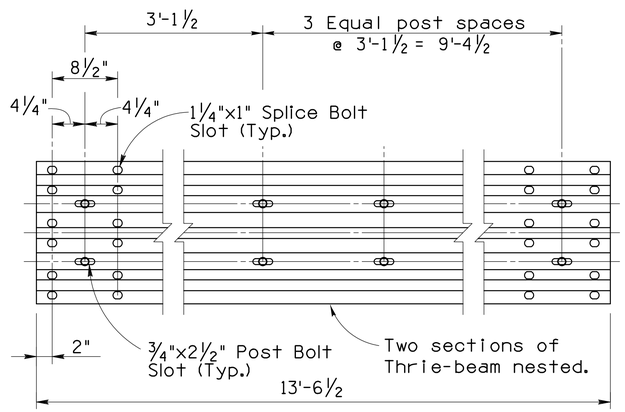

THRIE BEAM ELEVATION

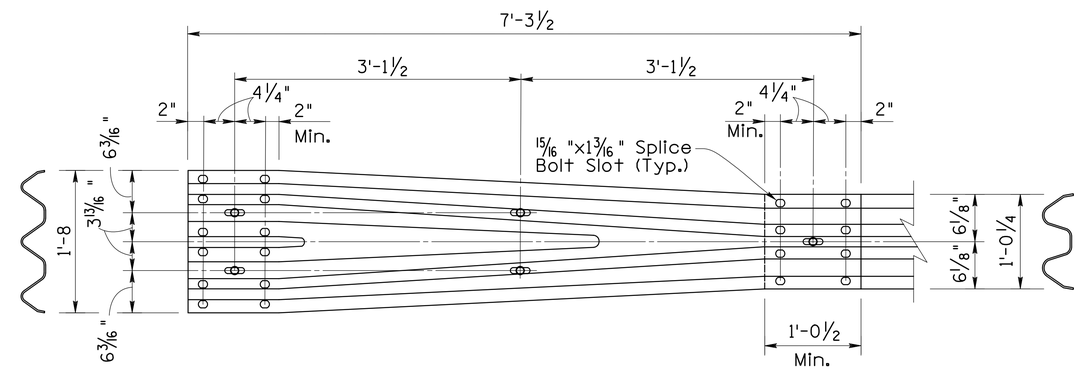

TRANSITION ELEVATION

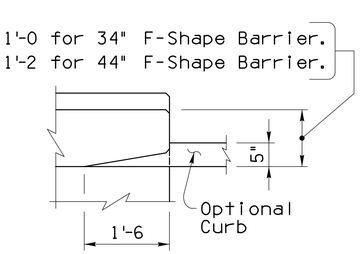

PART. PLAN
(Showing Opt. Curb)

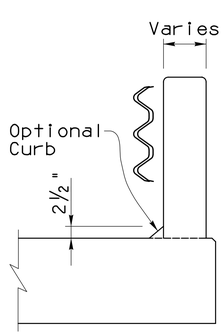

END VIEW
(Showing Opt. Curb)

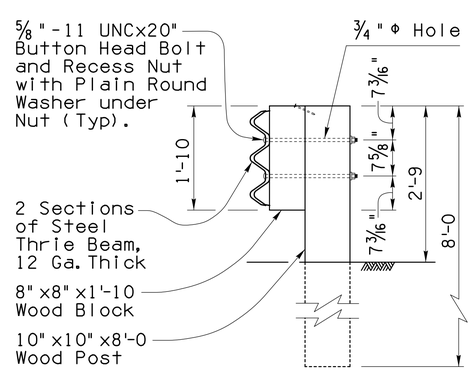

SECTION A-A

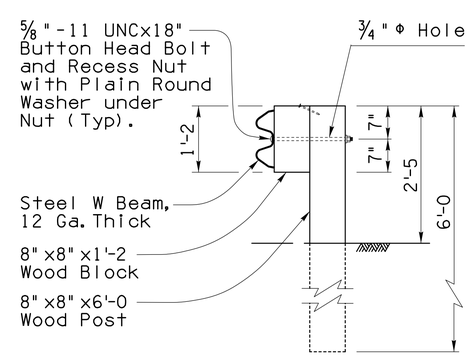

SECTION B-B

Note to Designer:
The information presented in this Standard Detail has been prepared in accordance with recognized engineering principles and is for general use. It should not be used for specific application without competent professional examination and verification of its suitability and applicability by a licensed professional engineer. Contents within the inner border line shall not be altered.

NO	DESCRIPTION OF REVISIONS	MADE BY	DATE
1	Original issue	S.U.H.	8-99
5	General Update	S.U.H.	11-07
6	Barrier height reference	S.U.H.	6-12
7			

DESIGN APPROVAL: Shafi U. Hasan

APPROVED FOR DISTRIBUTION: Jean A. Nehme

ARIZONA DEPARTMENT OF TRANSPORTATION
INTERMODAL TRANSPORTATION DIVISION
BRIDGE GROUP STRUCTURE DETAIL

THRIE BEAM GUARD RAIL TRANSITION SYSTEM

ROUTE	PROJECT NO.	FA NO.	DRAWING NO. SD 1.03
LOCATION			SHEET NO. 122 OF 203

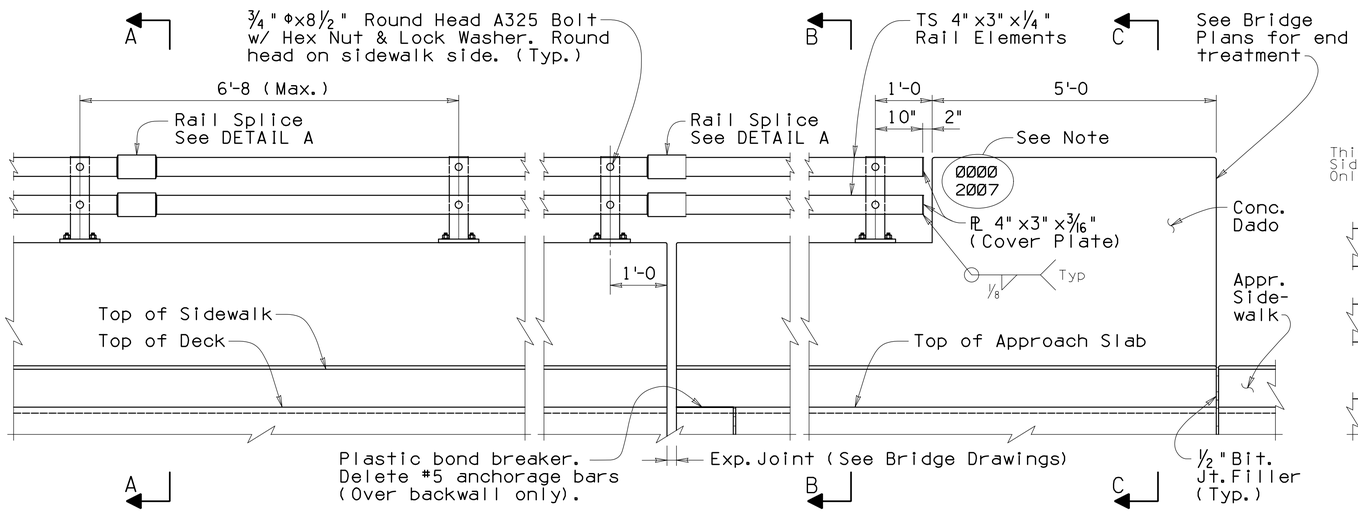

TYPICAL PANEL ELEVATION

ELEVATION AT EXP. JT.

ELEVATION AT END POST

NOTE:

For rail splices not at expansion joints, provide 1 inch gap and weld both ends of splice tube.

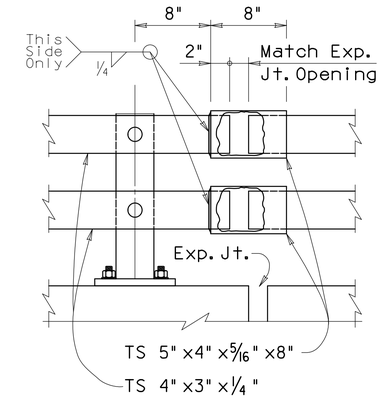

DETAIL A

(Exp. Splice Shown)

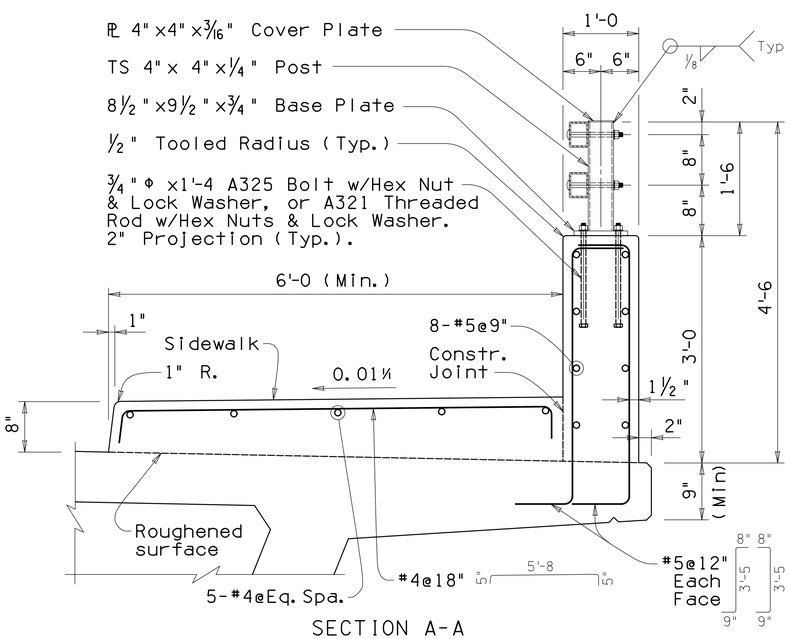

SECTION A-A

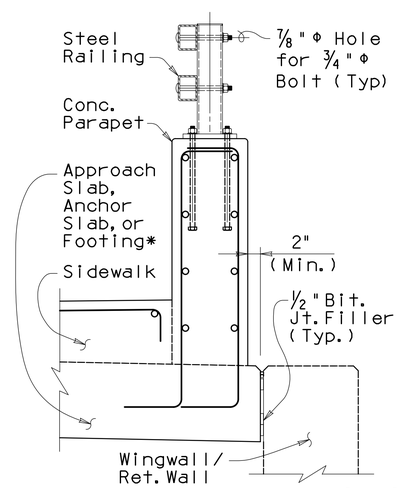

SECTION B-B

* See SD 1.01 for footing details.

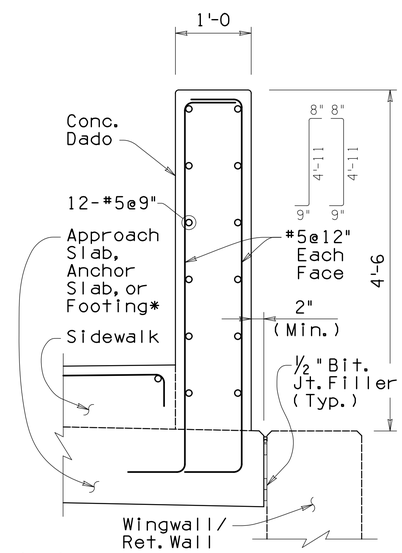

SECTION C-C

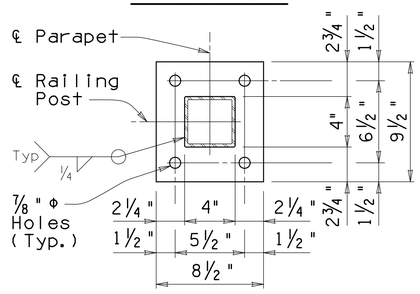

PLATE DETAIL

GENERAL NOTES:

Construction Specification - Arizona Department of Transportation Standard Specifications for Road and Bridge Construction, latest Edition.

Design Specifications - AASHTO LRFD Bridge Design Specifications, 4th Edition 2007.

This barrier is structurally evaluated as meeting the requirements of NCHRP Report 350 Test Level 4.

All Concrete shall be Class "S" (f'c = 4000 psi).

Reinforcing steel shall conform to ASTM Specification A615. All reinforcing shall be furnished as Grade 60. All reinforcing shall be epoxy coated at locations above EL. 4000 ft.

All bends and hooks shall meet the requirements of AASHTO LRFD Article 5.10. All bend dimensions for reinforcing steel shall be out-to-out of bars. All placement dimensions for reinforcing steel shall be to center of bars unless noted otherwise.

All reinforcing steel shall have 1½ inch clear cover unless noted otherwise.

Structural tubing (TS) shall be ASTM A500 Grade B. All other structural steel shall conform to ASTM A36 unless noted otherwise.

All welding shall conform to the requirements of the American Welding Society, ANSI/AASHTO/ AWS D1.5 Bridge Welding Code, latest Edition.

Concrete parapets on continuous superstructures shall have ½" bituminous joint filler in open joints over piers. See bridge drawings for details.

Imbed ½", Bridge Number and Year Built, using 1½"w x 2"h number impressions in concrete, located as shown at the approach end of the outside lane.

Labor and materials for railing, parapet, dado, anchorage bars, sidewalk and PEDESTRIAN FENCE (SD 1.05) are included in the pay item (Item No. 6011132).

Dimensions shall not be scaled from drawings.

Item No. 6011132 COMBINATION PEDESTRIAN-TRAFFIC BRIDGE RAILING
Measure: Linear Foot

RAILING NOTES:

See Bridge Plans for rail layout, elevation, joint locations and rail end treatments.

All exposed steel edges shall be ground smooth. All structural steel rail assembly components shall be galvanized after fabrication in accordance with ASTM A123. All galvanizing that has been damaged in handling, transportation or welding shall be repaired by the application of a paste compound of an approved zinc powder and flux.

All post bolt heads shall be on sidewalk side. All bolts, nuts and washers shall be galvanized in accordance with the requirements of ASTM A153.

For fence attachment details, see Structure Detail SD 1.05. (Lower rail tube is not required with fence.)

Note to Designer:
The information presented in this Standard Detail has been prepared in accordance with recognized engineering principles and is for general use. It should not be used for specific application without competent professional examination and verification of its suitability and applicability by a licensed professional engineer. Contents within the inner border line shall not be altered.

NO	DESCRIPTION OF REVISIONS	MADE BY	DATE
1	Original Issue	S.U.H.	8-99
2	Bid Item No. Note	S.U.H.	9-99
3	General Updates. Revised width of parapet and sidewalk.	S.U.H.	3-09
4			

DESIGN APPROVED: Shafi U. Hasan

APPROVED FOR DISTRIBUTION: Jean A. Nehme

ARIZONA DEPARTMENT OF TRANSPORTATION
INTERMODAL TRANSPORTATION DIVISION
BRIDGE GROUP STRUCTURE DETAIL

COMBINATION PEDESTRIAN-TRAFFIC BRIDGE RAILING

ROUTE	PROJECT NO.	FA NO.	DRAWING NO. SD 1.04
LOCATION			SHEET NO. 123 OF 203

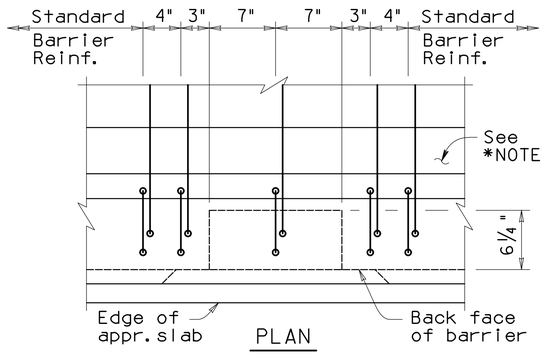

PLAN

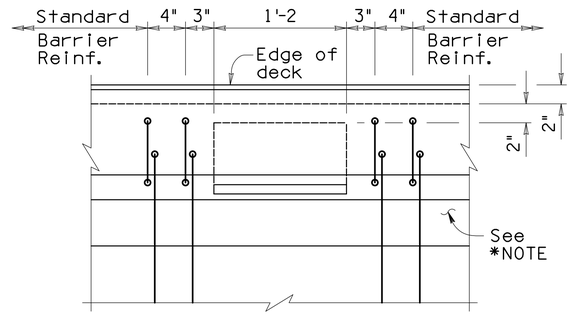

PLAN

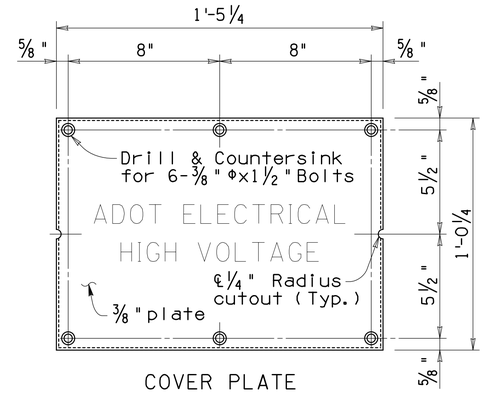

COVER PLATE

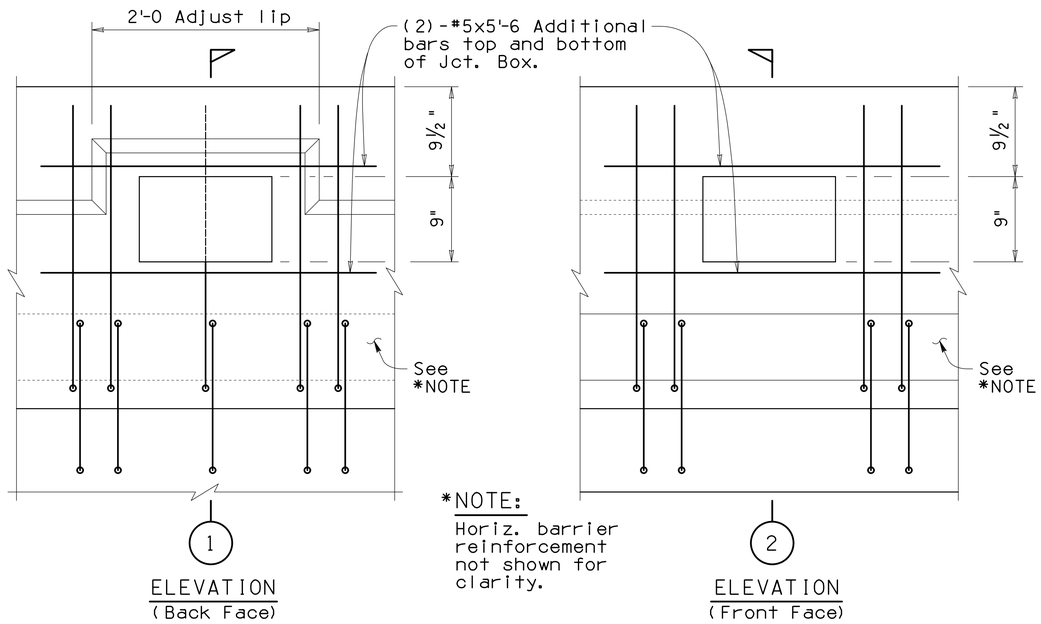

ELEVATION
(Back Face)

ELEVATION
(Front Face)

*NOTE:
Horiz. barrier reinforcement not shown for clarity.

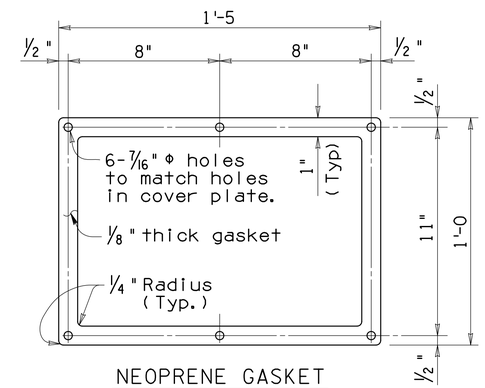

NEOPRENE GASKET

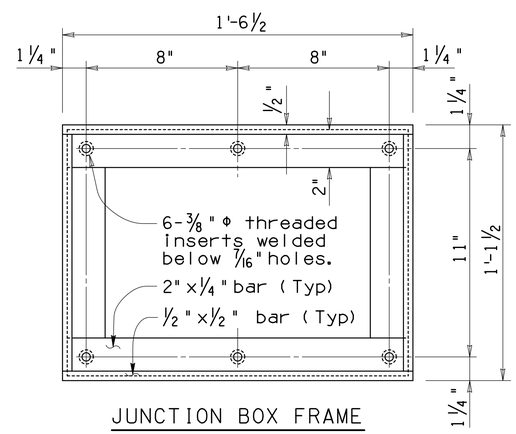

JUNCTION BOX FRAME

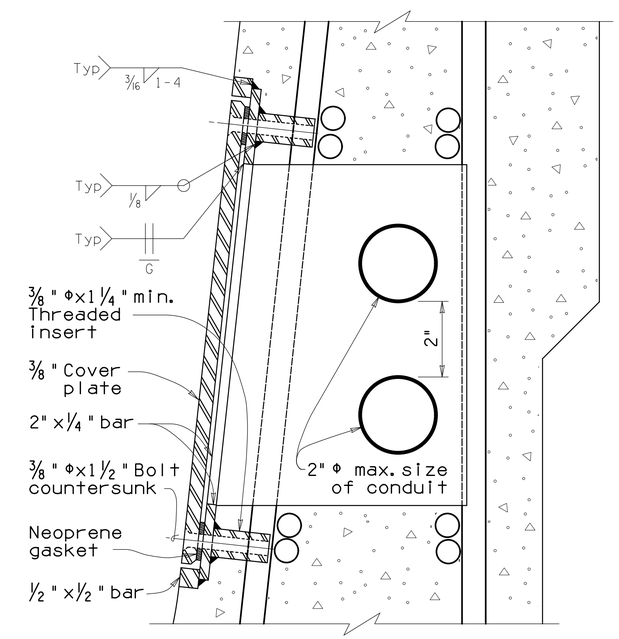

JUNCTION BOX DETAIL

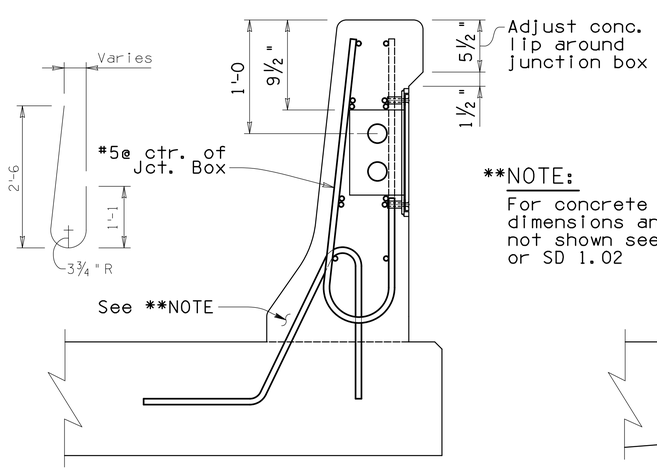

TYPE I JUNCTION BOX (1)
(At Approach Transition)

**NOTE:
For concrete barrier dimensions and details not shown see SD 1.01 or SD 1.02

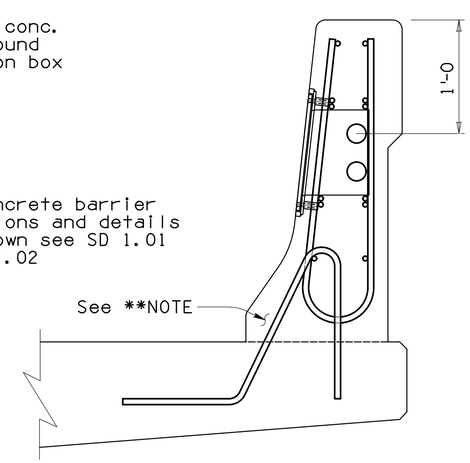

TYPE II JUNCTION BOX (2)
(On Bridge)

GENERAL NOTES:

Construction Specification - Arizona Department of Transportation Standard Specifications for Road and Bridge Construction, latest Edition.

Design Specifications - AASHTO LRFD Bridge Design Specifications, 4th Edition 2007.

Conduits shall not be placed in exterior barriers of Interstate Highway System bridges.

Structural steel shall conform to ASTM A36.

All bolts shall conform to ASTM A307. Threaded inserts shall be loop type (U.N.C. thread).

All bolts, nuts and washers shall be galvanized in accordance with ASTM A153. All other steel shall be galvanized after fabrication in accordance with ASTM A123.

Chamfer all bottom edges of cover plate ⅛"x 45°. Cover plate shall have 1" letters embeded ⅛" to say: "ADOT ELECTRICAL HIGH VOLTAGE".

All welding shall conform to the requirements of the American Welding Society, ANSI/AASHTO/AWS D1.5 Bridge Welding Code, latest Edition.

Dimensions shall not be scaled from drawings.

Item No. 7320475 TYPE I JUNCTION BOX
Measure: Each

Item No. 7320476 TYPE II JUNCTION BOX
Measure: Each

NOTE:
Conduit placement in bridge barrier requires pre-approval by Bridge Group.

Junction Box is shown for (32") nominal F-Shape barrier. Details similar for (42") nominal F-Shape barrier and other concrete bridge parapets.

Note to Designer:
The information presented in this Standard Detail has been prepared in accordance with recognized engineering principles and is for general use. It should not be used for specific application without competent professional examination and verification of its suitability and applicability by a licensed professional engineer. Contents within the inner border line shall not be altered.

NO	DESCRIPTION OF REVISIONS	MADE BY	DATE
1	Original Issue	H.M.S.	5-02
2	General Update	S.U.H.	4-10
3			
4			

DESIGN APPROVED: Shafi U. Hasan
APPROVED FOR DISTRIBUTION: Jean A. Nehme

ARIZONA DEPARTMENT OF TRANSPORTATION
INTERMODAL TRANSPORTATION DIVISION
BRIDGE GROUP STRUCTURE DETAIL

BARRIER JUNCTION BOX

ROUTE	PROJECT NO.	FA NO.	DRAWING NO. SD 1.11
LOCATION			SHEET NO. 124 OF 203

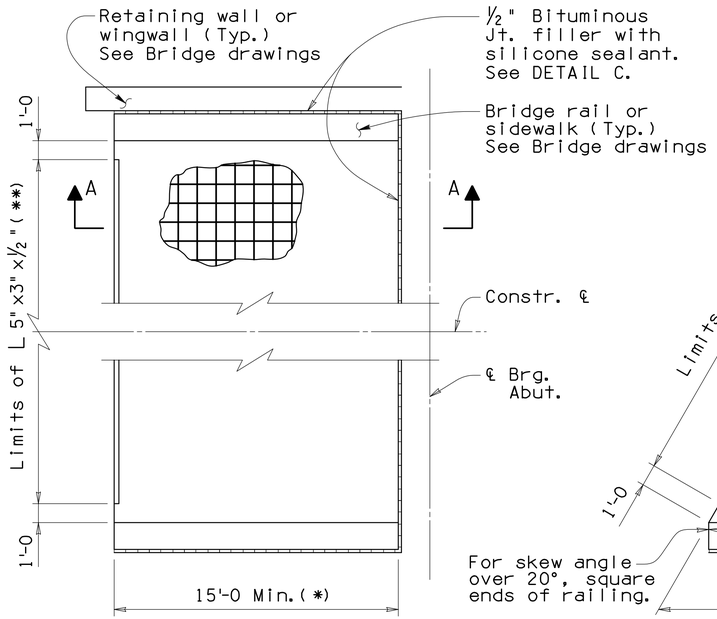

PLAN A
Rt. Angle Bridge

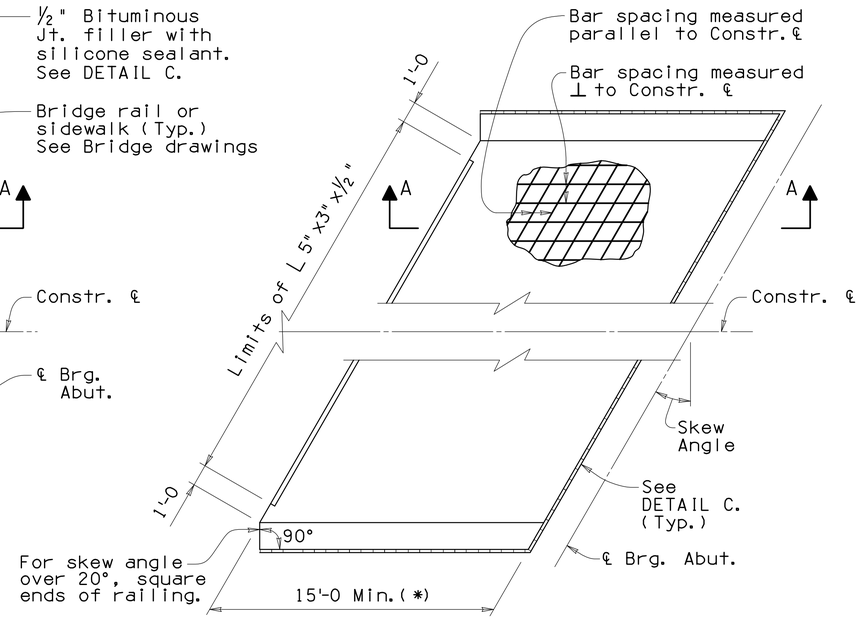

PLAN B
Skewed Bridge Without Anchor Slab
Skew Angle ≤ 45°

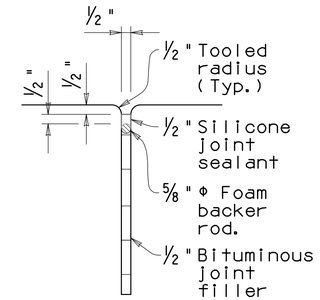

DETAIL C

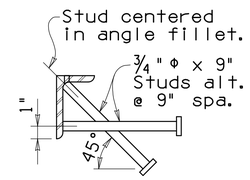

ALT. ANCHOR DETAIL

GENERAL NOTES:

Construction Specification - Arizona Department of Transportation Standard Specifications for Road and Bridge Construction, latest Edition.

Design Specifications - AASHTO LRFD Bridge Design Specifications, 4th Edition 2007.

All Concrete shall be Class "S" (f'c = 4000 psi).

Reinforcing steel shall conform to ASTM Specification A615. All reinforcing shall be furnished as Grade 60. All reinforcing shall be epoxy coated at locations above EL. 4000 ft.

All bends and hooks shall meet the requirements of AASHTO Article 5.10. All bend dimensions for reinforcing steel shall be out-to-out of bars. All placement dimensions for reinforcing steel shall be to center of bars unless noted otherwise.

All reinforcing steel shall have 2 inch clear cover unless noted otherwise.

Structural steel shall conform to ASTM specification A588 Grade 50 or A709 Grade 50W.

All welding shall conform to the requirements of the American Welding Society, ANSI/AASHTO/AWS D1.5 Bridge Welding Code, latest Edition.

Dimensions shall not be scaled from drawings.

Item No. 6011371 APPROACH SLAB
Measure: Square Foot

JOINT NOTE:

½" Silicone joint sealant shall be ASTM D5893 Type NS. 2" Silicone joint sealant shall be rapid-cure, self leveling, two-part silicone rubber sealant designed for expansion joints. Prime coat concrete sides of joint. Do not prime coat the backer rod. Backer rod shall be closed cell polyethylene foam.

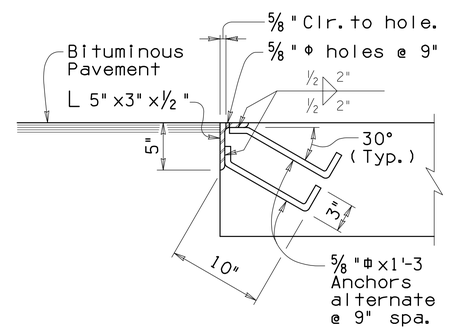

DETAIL A
Bituminous Pavement Alternate

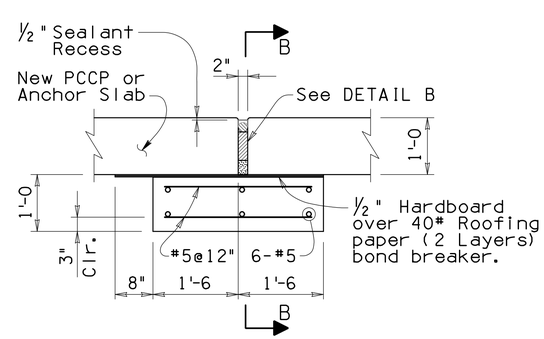

DETAIL A
Concrete Pavement Alternate

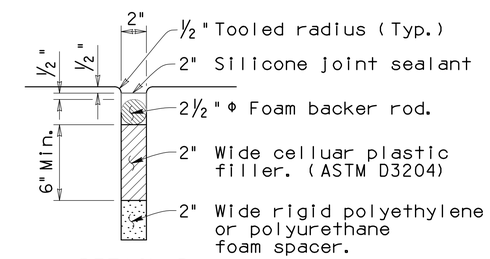

DETAIL B

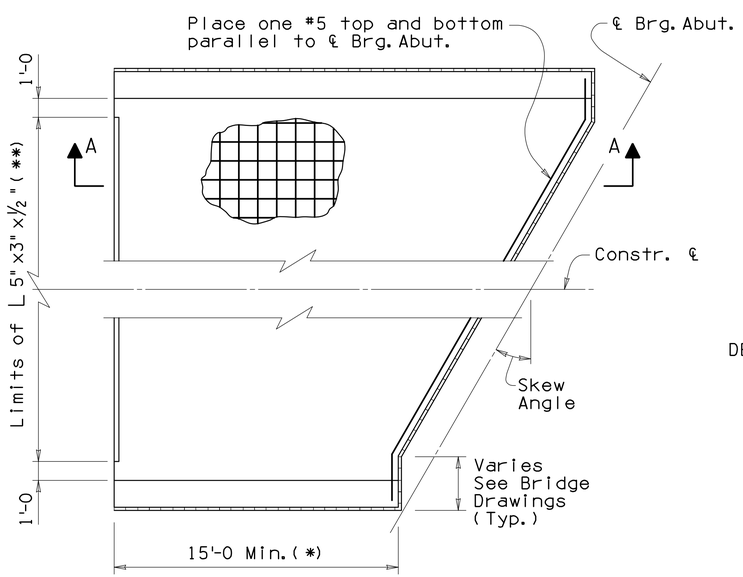

PLAN C
Skewed Bridge
Skew Angle > 45°

(**) Omit total guard angle for concrete pavement alternate.

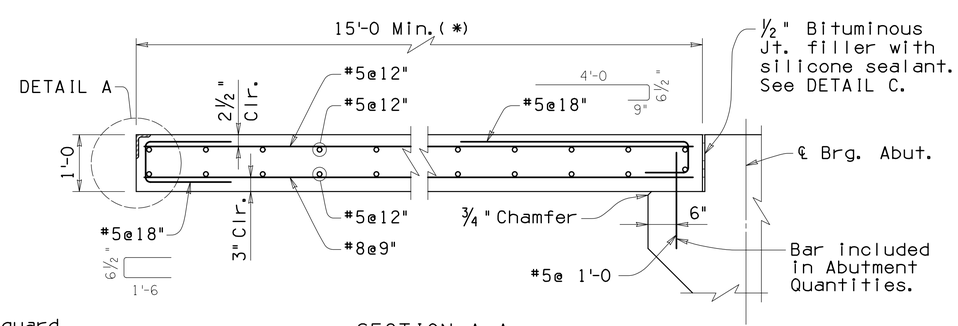

SECTION A-A

(*) See Bridge drawings for length.

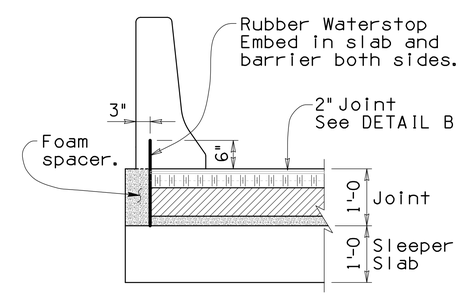

SECTION B-B

Note to Designer:
The information presented in this Standard Detail has been prepared in accordance with recognized engineering principles and is for general use. It should not be used for specific application without competent professional examination and verification of its suitability and applicability by a licensed professional engineer. Contents within the inner border line shall not be altered.

NO	DESCRIPTION OF REVISIONS	MADE BY	DATE
1	Original Issue	J.R.P.	11-00
2	General Update	S.U.H.	12-07
3			
4			

DESIGN APPROVAL: Shafi U. Hasan
APPROVED FOR DISTRIBUTION: Jean A. Nehme

ARIZONA DEPARTMENT OF TRANSPORTATION
INTERMODAL TRANSPORTATION DIVISION
BRIDGE GROUP STRUCTURE DETAIL

APPROACH SLAB DETAILS

ROUTE | PROJECT NO. | FA NO. | DRAWING NO. SD 2.01
LOCATION | SHEET NO. 125 OF 203

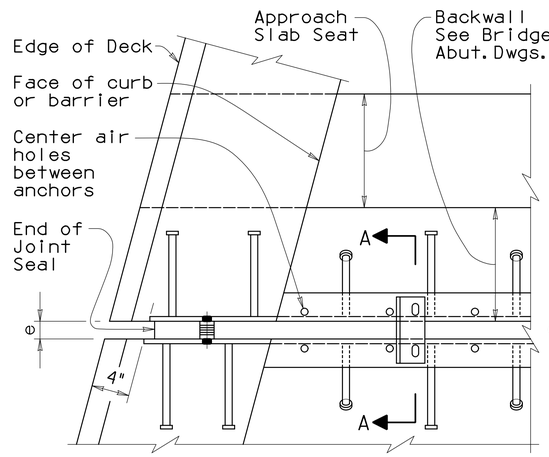

FOR SKEWS 0° THRU 20°

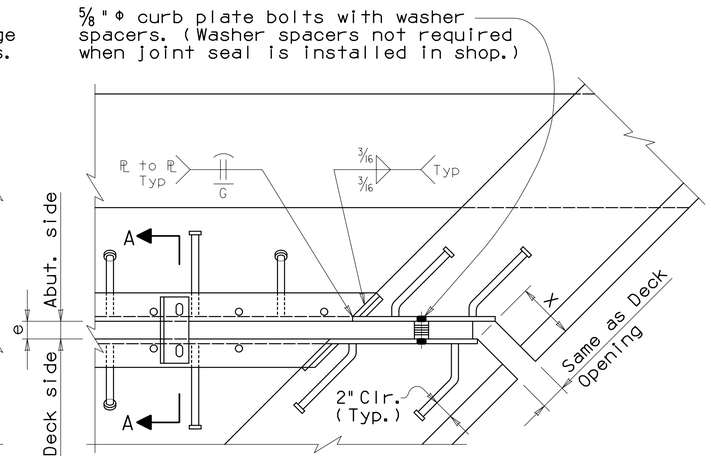

FOR SKEWS 21° THRU 45°

PLAN

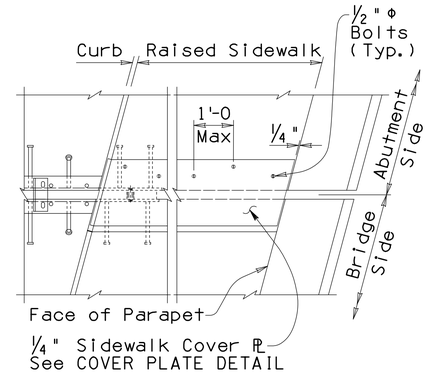

PLAN AT SIDEWALK

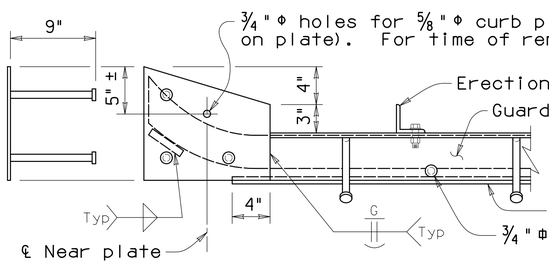

FOR SKEWS 0° THRU 20°

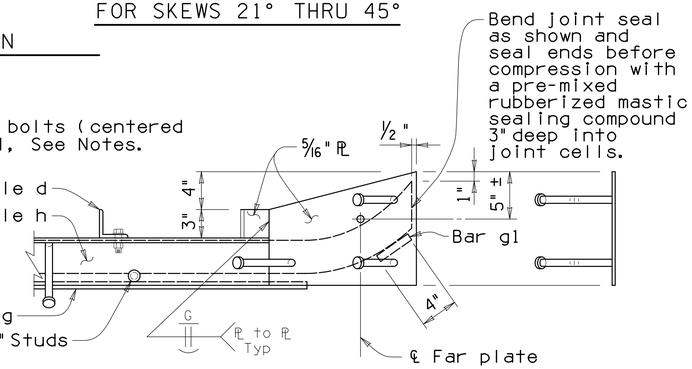

FOR SKEWS 21° THRU 45°

ELEVATION
(Near angle shown, far angle similar)

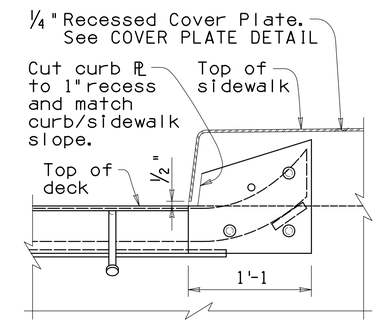

ELEVATION AT SIDEWALK

Polychloroprene Cellular Joint Seal (Nominal Dimensions)				
	2 x 2	3 x 3	4 x 4	5 x 5
a	6 1/2	7	7 1/2	8
b	1 3/8	1 5/16	1 1/4	1 1/4
c	3 3/4	4 3/8	5	5 1/2
d	L 2x2x1/4	L 3x3x3/8	L 3 1/2 x3 1/2 x3/8	L 4x4x3/8
e max	1.625	2.500	3.375	4.250
e min	0.875	1.250	1.625	1.750
f	3 5/8	4 5/8	5 5/8	6 5/8
g or g1	1/4 x3/4 bar	3/8 x3/4 bar	1/2 x3/4 bar	5/8 x3/4 bar
h	L 5x3x3/8	L 5x3x3/8	L 6x3 1/2 x3/8	L 7x4x1/2
M.R.	3/4	1 1/4	1 3/4	2 1/2

M.R. = Movement rating. The difference between the smallest and the largest width of seal in place.

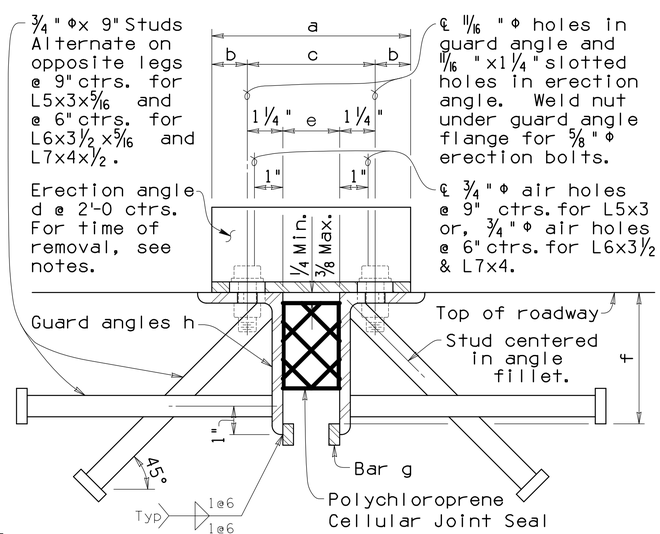

SECTION A-A

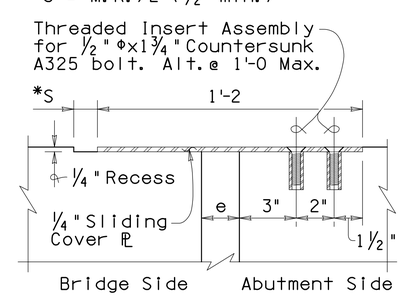

COVER PLATE DETAIL

Skew Angle	21°-33°	34°-36°	37°-40°	41°-43°	44°-45°
Dimension X	4"	4 1/2"	5"	5 1/2"	6"

GENERAL NOTES:

Construction Specification - Arizona Department of Transportation Standard Specifications for Road and Bridge Construction, latest Edition.

Design Specifications - AASHTO LRFD Bridge Design Specifications, 4th Edition 2007.

Structural steel shall conform to ASTM A588 Grade 50 or A709 Grade 50W. Studs shall conform to ASTM A108 Grades 1015, 1018 or 1020.

Cellular joint seal shall meet the requirements of ADOT Std. Spec. 1011-5.

Sidewalk cover plate shall be galvanized A36 steel with non-slip (deformed) surface.

All welding shall conform to the requirements of the American Welding Society, ANSI/AASHTO/AWS D1.5 Bridge Welding Code, latest Edition.

Guard angles and cellular seal shall be one piece, without splices, for lengths 60 feet or less. For lengths over 60 feet or phase construction, guard angles and cellular seal may be two pieces butted together at crown or another location away from drainage.

Prior to installation of the seal and lubricant adhesive, steel contact surfaces with the seal shall be cleaned and prepared in accordance with the seal mfg. requirements.

Joint opening e shall be adjusted in the field for any variation of temperature above or below the mean temperature. See bridge drawings for mean temperature and temperature correction chart.

Erection angles and curb plate bolts shall be removed immediately after deck joint is fully encased in concrete (except curb or barrier concrete), and such concrete has attained it's initial set (2 hours ±).

Holes for curb plate bolts shall be plugged before placing curb/barrier concrete.

Dimensions shall not be scaled from drawings.

Item No.	Deck Joint Assembly	Measure
6011346	2x2 Compression Seal	LF
6011347	3x3 Compression Seal	LF
6011348	4x4 Compression Seal	LF
6011349	5x5 Compression Seal	LF

Note to Designer:
The information presented in this Standard Detail has been prepared in accordance with recognized engineering principles and is for general use. It should not be used for specific application without competent professional examination of its suitability and applicability by a licensed professional engineer. Contents within the inner border line shall not be altered.

NO	DESCRIPTION OF REVISIONS	MADE BY	DATE
1	Original Issue	S.U.H.	9-01
2	Drawing Number Change	S.U.H.	8-02
3	General Update	S.U.H.	6-09
4			

Shafi U. Hasan
APPROVED FOR DISTRIBUTION
Jean A. Nehme

ARIZONA DEPARTMENT OF TRANSPORTATION
INTERMODAL TRANSPORTATION DIVISION
BRIDGE GROUP STRUCTURE DETAIL

DECK JOINT ASSEMBLY
COMPRESSION SEAL

ROUTE | PROJECT NO. | FA NO. | DRAWING NO. SD 3.01
LOCATION | SHEET NO. 126 OF 203

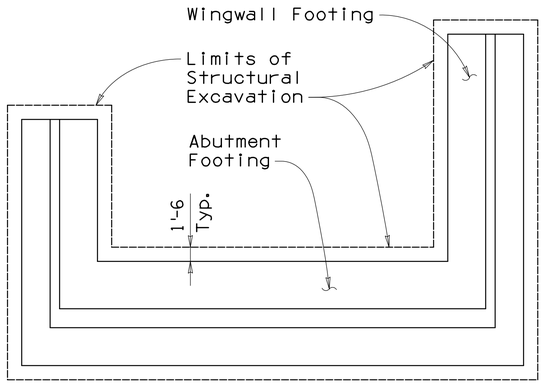

TYPICAL ABUTMENT FOOTING PLAN

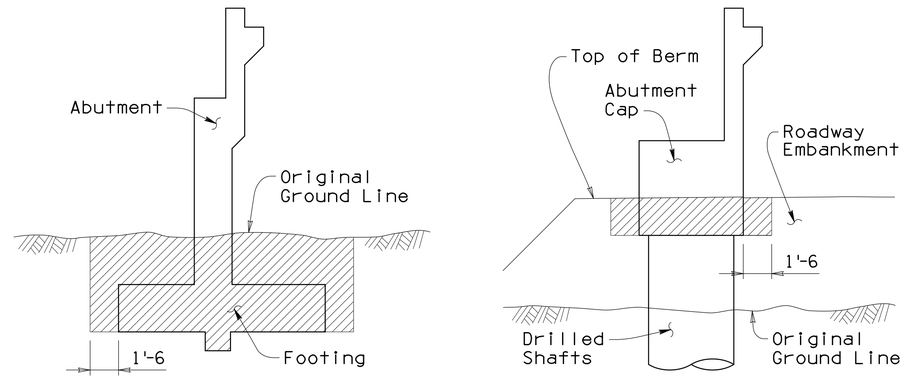

TYPICAL ABUTMENT SECTIONS

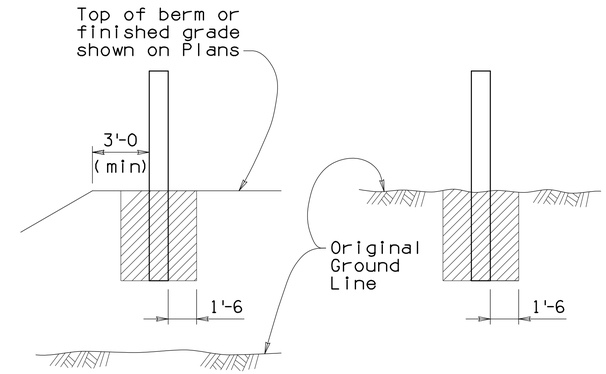

WINGWALLS

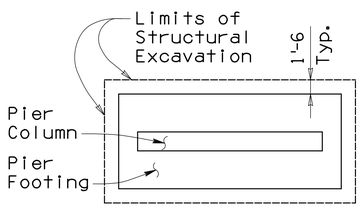

TYPICAL PIER FOOTING PLAN

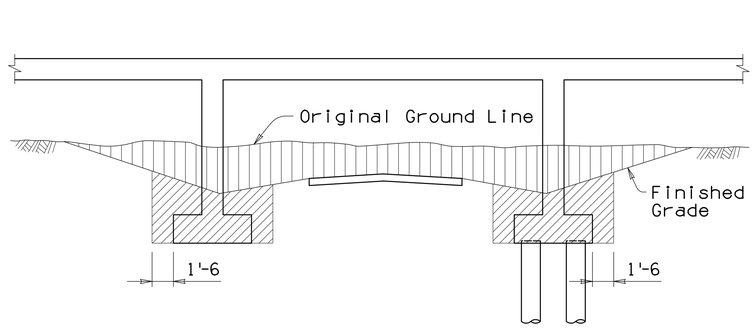

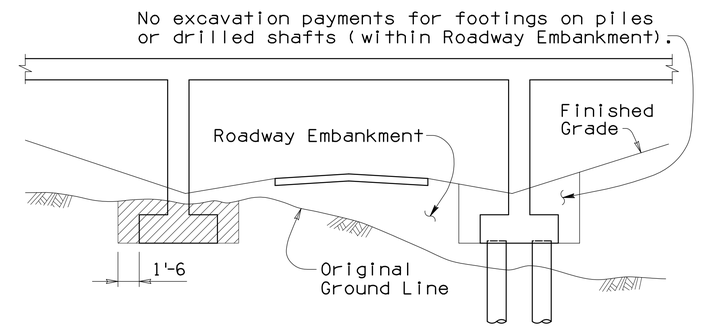

TYPICAL PIER ELEVATIONS

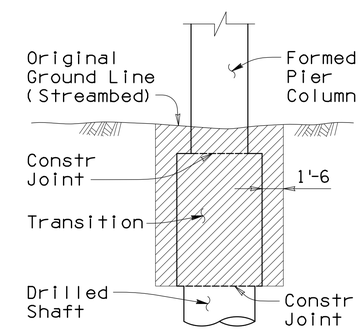

PIER SECTION

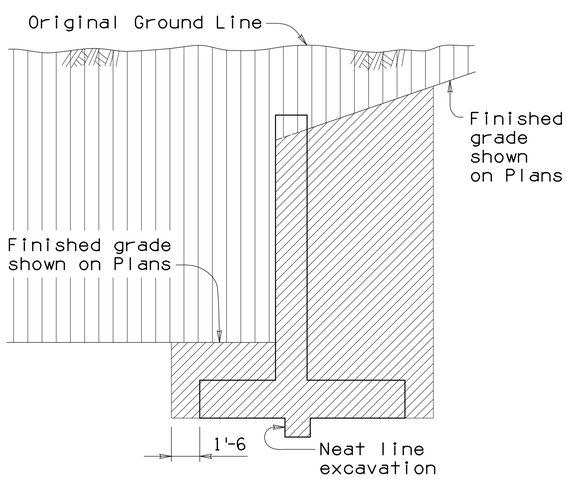

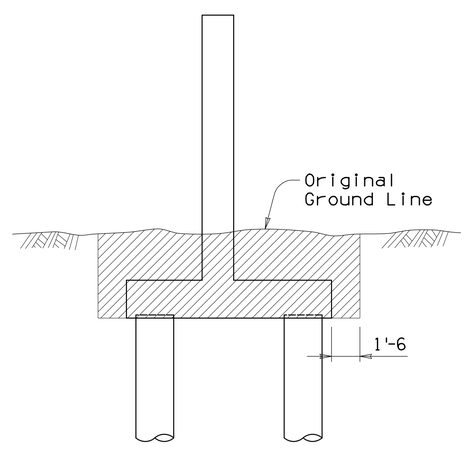

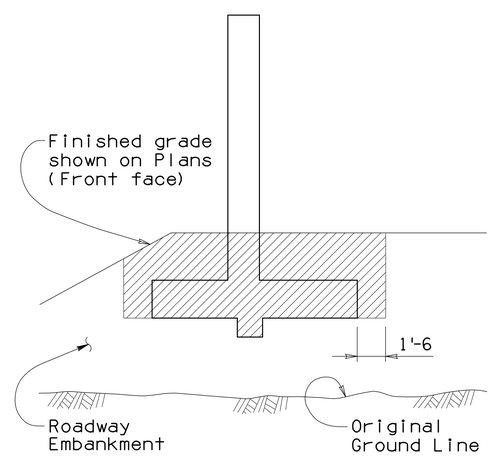

TYPICAL RETAINING WALL SECTIONS

LEGEND

Structural Excavation

Roadway Excavation

NOTES:

For structure foundations above original ground line, construct roadway embankment to top of berm or finished grade before strucural excavation is made.

If no roadway excavation or embankment is involved, structural excavation shall be measured from the original ground line.

Note to Designer:
The information presented in this Standard Detail has been prepared in accordance with recognized engineering principles and is for general use. It should not be used for specific application without competent professional examination and verification of its suitability and applicability by a licensed professional engineer. Contents within the inner border line shall not be altered.

NO.	DESCRIPTION OF REVISIONS	MADE BY	DATE
1	Original Issue	S.U.H.	11-12
2			
3			
4			

DETAIL APPROVED: Shafi U. Hasan

APPROVED FOR DISTRIBUTION: Jean A. Nehme

ARIZONA DEPARTMENT OF TRANSPORTATION
INTERMODAL TRANSPORTATION DIVISION
BRIDGE GROUP STRUCTURE DETAIL

STRUCTURAL EXCAVATION PAYMENT LIMITS

ROUTE	PROJECT NO.	FA NO.	DRAWING NO. SD 5.01
LOCATION			SHEET NO. 127 OF 203

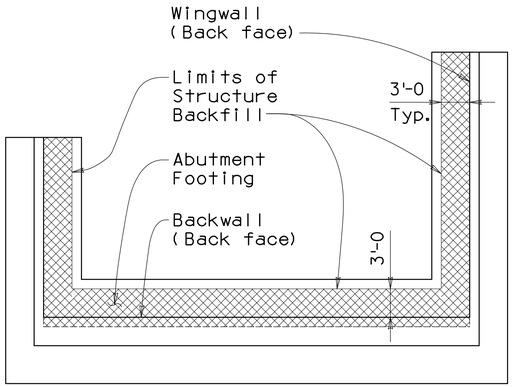

TYPICAL ABUTMENT FOOTING PLAN

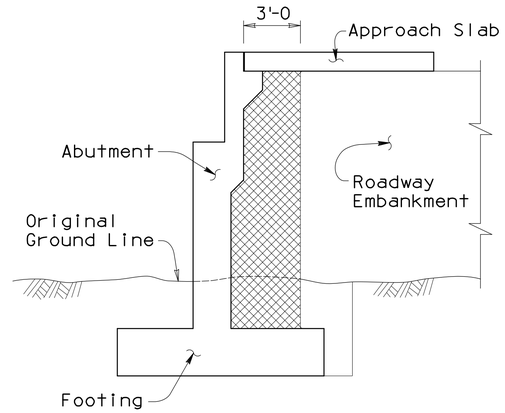

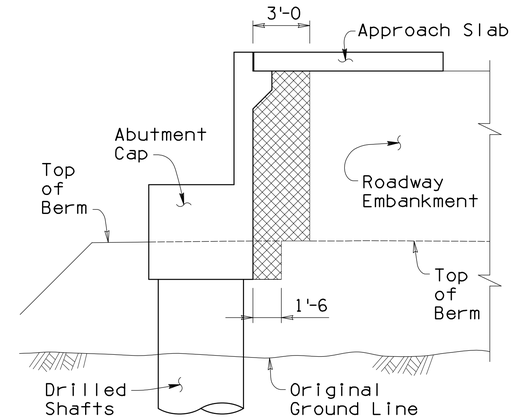

TYPICAL ABUTMENT SECTIONS

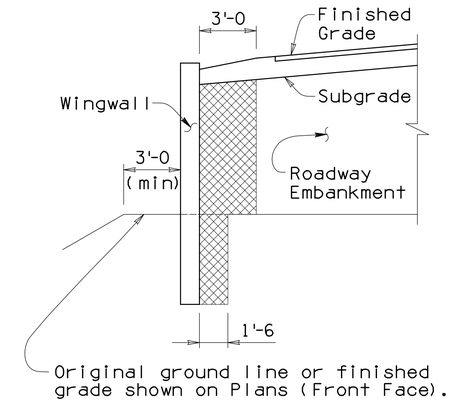

WINGWALL

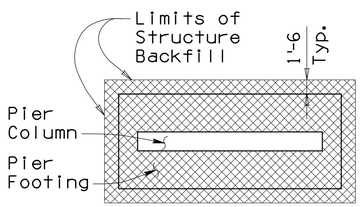

TYPICAL PIER FOOTING PLAN

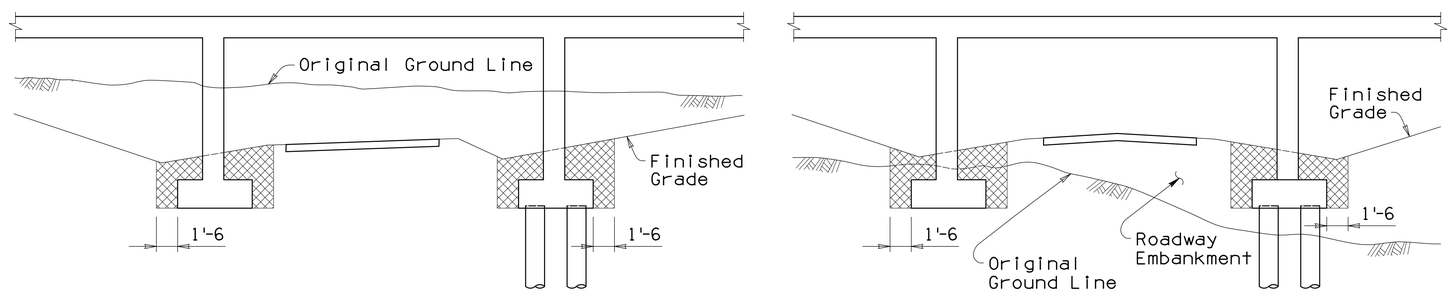

TYPICAL PIER ELEVATIONS

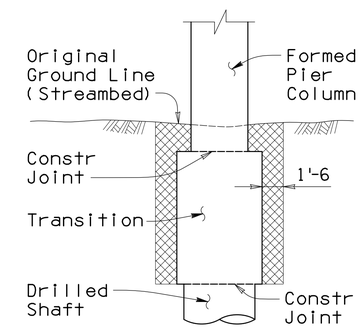

PIER SECTION

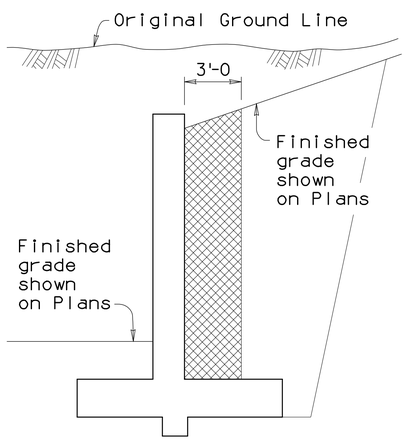

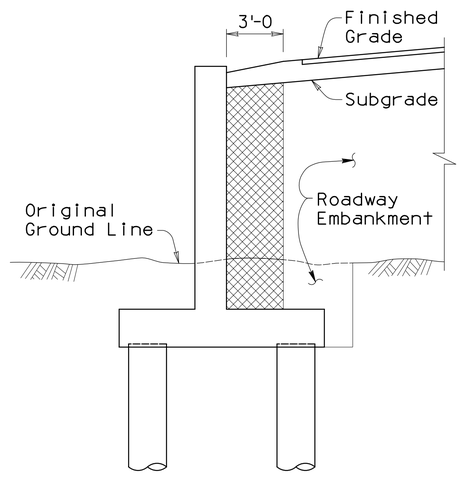

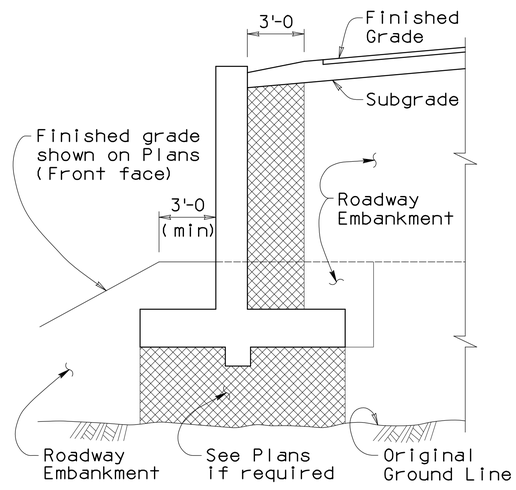

TYPICAL RETAINING WALL SECTIONS

LEGEND

Structure Backfill

NOTES:

Structure backfill shall be compacted to a minimum of 100% of the maximum density (ASTM D698).

Note to Designer:
The information presented in this Standard Detail has been prepared in accordance with recognized engineering principles and is for general use. It should not be used for specific application without competent professional examination and verification of its suitability and applicability by a licensed professional engineer. Contents within the inner border line shall not be altered.

NO.	DESCRIPTION OF REVISIONS	MADE BY	DATE
1	Original Issue	S.U.H.	11-12
2			
3			
4			

DESIGN APPROVED: Shafi U. Hasan

APPROVED FOR DISTRIBUTION: Jean A. Nehme

ARIZONA DEPARTMENT OF TRANSPORTATION
INTERMODAL TRANSPORTATION DIVISION
BRIDGE GROUP STRUCTURE DETAIL

STRUCTURE BACKFILL
PAYMENT LIMITS

ROUTE	PROJECT NO.	FA NO.	DRAWING NO. SD 5.02
LOCATION			SHEET NO. 128 OF 203

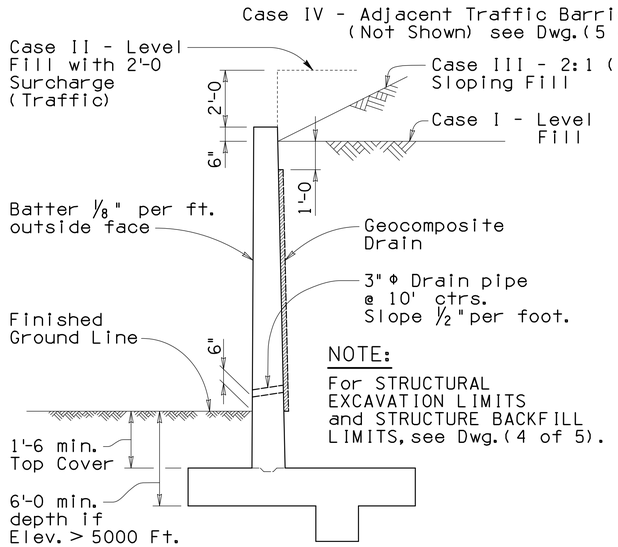

NOTE:

For STRUCTURAL EXCAVATION LIMITS and STRUCTURE BACKFILL LIMITS, see Dwg.(4 of 5).

TYPICAL SECTION

(Case I, II, III)

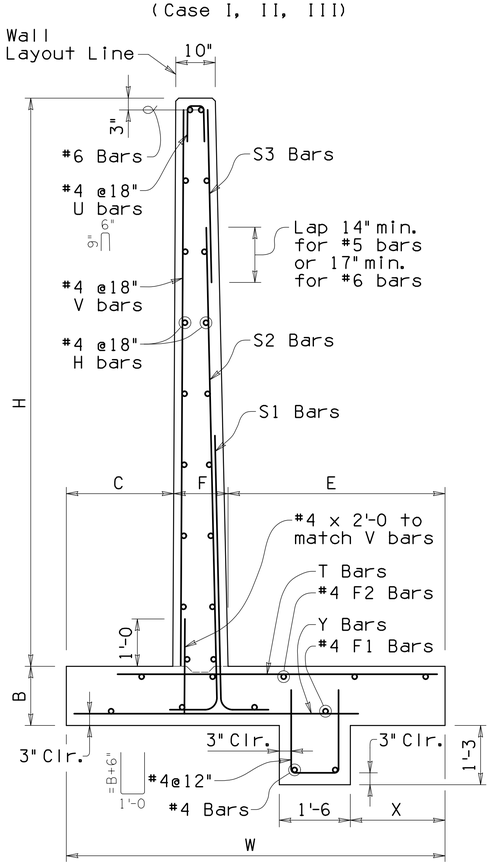

TYPICAL WALL DETAILS

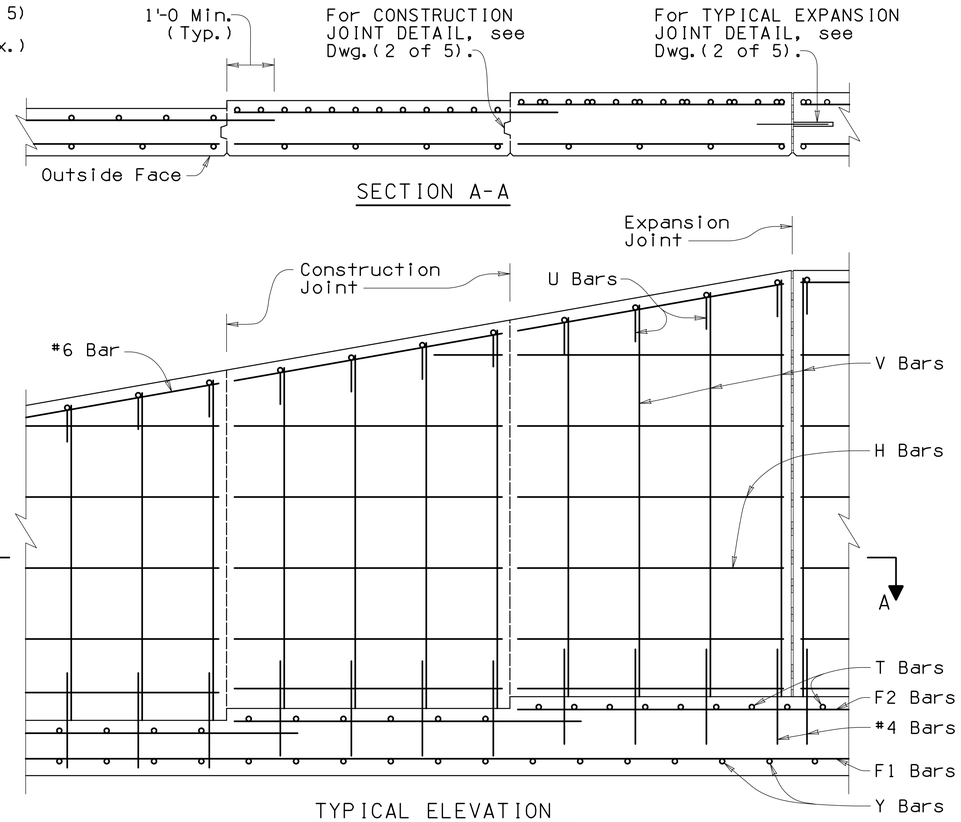

SECTION A-A

TYPICAL ELEVATION

(Outside Face Reinforcing)

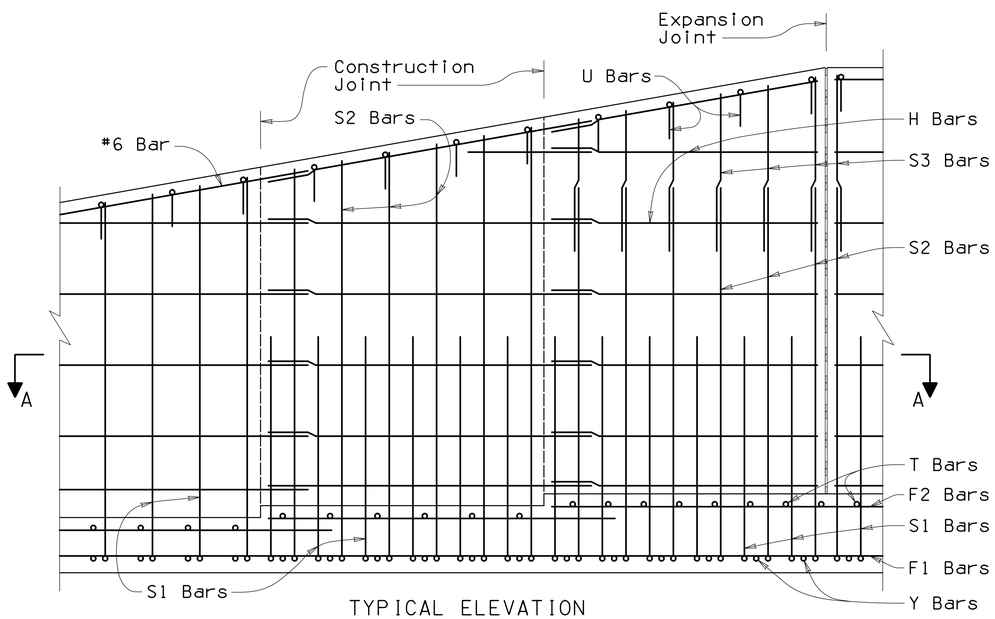

TYPICAL ELEVATION

(Inside Face Reinforcing)

GENERAL NOTES:

Construction Specification - Arizona Department of Transportation Standard Specifications for Road and Bridge Construction, latest Edition.

Design Specifications - AASHTO LRFD Bridge Design Specifications, 7th Edition 2014.

Design:
Soil weight = 120 p.c.f.
Backfill angle of internal friction = 33°
Existing ground angle of internal friction = 31°

All Concrete shall be Class "S" (f'c = 3000 psi).

Reinforcing steel shall conform to ASTM Specification A615. All reinforcing shall be furnished as Grade 60.

All bends and hooks shall meet the requirements of AASHTO LRFD Article 5.10. All bend dimensions for reinforcing steel shall be out-to-out of bars. All placement dimensions for reinforcing steel shall be to center of bars unless noted otherwise.

All reinforcing steel shall have 2 inch clear cover unless noted otherwise.

Chamfer all exposed corners 3/4" unless noted otherwise.

Compact structure backfill for footing and wall base minimum 100 percent of ASTM D698 max. dry density.

See Project Plans for wall layout, top of footing and finished grade elevations, footing step and wall joint locations. Construction Joints shall match the locations of contraction joints. See Project Plans for wall surface treatment. Increase the wall thickness at the face for the depth of surface treatment.

Dimensions shall not be scaled from drawings.

Pay item measure of square foot of wall constructed is measured along front face of wall from top of footing to top of wall cap. Pay item includes all labor and materials for excavation, backfill, drainage and reinforced concrete wall with footing.

Item No. 9140178 RETAINING WALL (REINFORCED CONCRETE CANTILEVER)
Measure: Square Foot

NOTE:

For Retaining Wall Dimensions, Quantities and additional Details, see SD 7.01 (2 to 5).

Note to Designer:
The information presented in this Standard Detail has been prepared in accordance with recognized engineering principles and is for general use. It should not be used for specific application without competent professional examination and verification of its suitability and applicability by a licensed professional engineer. Contents within the inner border line shall not be altered.

NO	DESCRIPTION OF REVISIONS	MADE BY	DATE
1	Original issue	S.U.H.	9-10
2	General update, added limit state values and notes.	D.B.B.	1-15
3	•		
4			

DESIGN ENGINEER

APPROVED FOR DISTRIBUTION

ARIZONA DEPARTMENT OF TRANSPORTATION
INTERMODAL TRANSPORTATION DIVISION
BRIDGE GROUP STRUCTURE DETAIL

RETAINING WALL
(REINFORCED CONCRETE CANTILEVER)

ROUTE	PROJECT NO.	FA NO.	DRAWING NO.
LOCATION			SD 7.01 (1 of 5)
			SHEET NO. 129 OF 203

CASE I - LEVEL FILL

Dimensions							Steel List																	Service Limit State			Strength Limit State		
							S1			S2			S3			H	V	Y			F1	T			F2					
H	W	B	C	F	E	X	Bar Size	Spacing	Length	Bar Size	Spacing	Length	Bar Size	Spacing	Length	Number ⊕	Length	Bar Size	Spacing	Length	Number ⊕	Bar Size	Spacing	Length	Number ⊕	qtveu-SERV Lbs./Sq.Ft.	qnveu-SERV Lbs./Sq.Ft.	B'SERV Ft.	qtveu-STR Lbs./Sq.Ft.	qnveu-STR Lbs./Sq.Ft.	B'STR Ft.
4'	3'-0	1'-0	10"	10"	1'-4	8"	5	12"	5'-6							4	3'-9	5	12"	2'-3	2	5	12"	2'-3	3	840	480	2.46	1130	650	2.36
5'	3'-6	1'-0	1'-0	10"	1'-8	9"	5	12"	6'-6							6	4'-9	5	12"	2'-9	2	5	12"	2'-9	3	920	560	2.91	1240	760	2.79
6'	4'-0	1'-0	1'-2	10"	2'-0	10"	5	12"	7'-6							6	5'-9	5	12"	3'-3	2	5	12"	3'-3	3	1010	650	3.31	1380	900	3.16
7'	4'-6	1'-0	1'-4	10"	2'-4	11"	5	12"	8'-6							8	6'-9	5	12"	3'-9	3	5	12"	3'-6	3	1110	750	3.70	1530	1040	3.52
8'	5'-0	1'-2	1'-6	10"	2'-8	1'-0	5	12"	9'-9							10	7'-9	5	12"	4'-3	3	5	12"	4'-0	3	1270	890	4.01	1750	1240	3.79
9'	5'-6	1'-2	1'-9	1'-0	2'-9	1'-2	5	12"	10'-9							10	8'-9	5	12"	4'-6	3	5	12"	4'-0	3	1350	970	4.40	1880	1370	4.14
10'	6'-0	1'-2	1'-9	1'-0	3'-3	1'-4	6	12"	11'-9							12	9'-9	5	12"	4'-9	3	5	12"	4'-6	4	1510	1130	4.73	2100	1590	4.45
11'	6'-6	1'-2	2'-0	1'-0	3'-6	1'-6	5	12"	4'-3	5	12"	12'-9				14	10'-9	5	12"	5'-3	4	5	12"	4'-9	4	1590	1210	5.12	2230	1710	4.81
12'	7'-0	1'-3	2'-0	1'-0	4'-0	1'-8	6	12"	5'-3	5	12"	13'-9				14	11'-9	5	12"	5'-6	4	6	12"	5'-6	5	1770	1380	5.42	2490	1960	5.08
13'	7'-6	1'-3	2'-3	1'-0	4'-3	1'-10	7	12"	6'-6	5	12"	14'-9				16	12'-9	5	12"	5'-9	4	6	9"	5'-9	5	1860	1470	5.81	2620	2090	5.43
14'	8'-0	1'-3	2'-3	1'-2	4'-7	2'-0	7	12"	7'-0	5	12"	15'-9				18	13'-9	5	12"	6'-3	4	7	12"	6'-9	5	2020	1630	6.14	2850	2320	5.74
15'	8'-6	1'-3	2'-6	1'-3	4'-9	2'-2	7	12"	8'-0	5	12"	16'-9				18	14'-9	6	12"	6'-6	5	7	12"	7'-0	5	2100	1710	6.53	2970	2450	6.10
16'	9'-0	1'-4	2'-6	1'-4	5'-2	2'-4	7	12"	7'-3	6	12"	8'-9	5	12"	10'-9	20	15'-9	6	12"	6'-9	5	8	12"	8'-3	6	2300	1900	6.82	3250	2710	6.36
17'	9'-6	1'-4	2'-9	1'-5	5'-4	2'-6	7	12"	6'-0	7	12"	9'-9	5	12"	10'-9	22	16'-9	6	9"	7'-3	5	8	12"	8'-6	6	2380	1980	7.21	3380	2840	6.72
18'	10'-0	1'-5	2'-9	1'-6	5'-9	2'-8	7	12"	7'-0	7	12"	10'-6	5	12"	11'-0	22	17'-9	6	9"	7'-6	5	7	8"	8'-6	6	2580	2170	7.50	3660	3110	6.99
19'	10'-6	1'-6	3'-0	1'-7	5'-11	2'-10	8	12"	8'-0	7	12"	10'-3	6	12"	12'-9	24	18'-9	6	9"	8'-0	6	8	9"	9'-3	7	2690	2270	7.86	3830	3260	7.30
20'	11'-0	1'-6	3'-0	1'-8	6'-4	3'-0	8	12"	7'-6	8	12"	11'-6	6	12"	12'-9	26	19'-9	6	8"	8'-3	6	8	8"	9'-6	7	2860	2440	8.19	4070	3500	7.61
21'	11'-6	1'-7	3'-3	1'-9	6'-6	3'-2	8	12"	8'-3	8	12"	12'-6	6	12"	12'-9	26	20'-9	7	12"	8'-9	6	9	9"	10'-6	7	2970	2540	8.54	4240	3660	7.92
22'	12'-0	1'-8	3'-3	1'-10	6'-11	3'-4	9	12"	9'-6	8	12"	13'-6	6	12"	13'-0	28	21'-9	7	12"	9'-0	6	9	9"	11'-0	7	3180	2740	8.83	4530	3940	8.18
23'	12'-6	1'-9	3'-6	2'-0	7'-0	3'-6	10	12"	12'-3	7	12"	14'-0	6	12"	13'-3	30	22'-9	8	12"	9'-3	6	8	6"	10'-3	7	3290	2840	9.18	4700	4100	8.49
24'	13'-0	1'-10	3'-6	2'-2	7'-4	3'-8	9	12"	9'-3	9	12"	15'-6	6	12"	13'-3	30	23'-9	8	12"	9'-6	7	8	6"	10'-6	8	3500	3040	9.47	5000	4380	8.76
25'	13'-6	2'-0	3'-9	2'-4	7'-5	3'-10	9	12"	10'-3	9	12"	16'-6	6	12"	13'-6	32	24'-9	8	12"	10'-0	7	8	6"	10'-9	8	3650	3170	9.78	5220	4580	9.02
26'	14'-0	2'-3	3'-9	2'-6	7'-9	4'-0	10	12"	13'-0	8	12"	17'-6	6	12"	13'-9	34	25'-9	8	12"	10'-3	7	8	6"	11'-0	8	3920	3410	9.99	5630	4940	9.19
27'	14'-6	2'-6	4'-0	2'-8	7'-10	4'-2	10	12"	12'-3	9	12"	18'-6	6	12"	14'-3	34	26'-9	8	12"	10'-6	7	8	6"	11'-0	8	4110	3570	10.26	5910	5180	9.41
28'	15'-0	2'-9	4'-0	2'-10	8'-2	4'-4	10	12"	13'-3	9	12"	19'-9	6	12"	14'-3	36	27'-9	8	12"	11'-0	7	8	6"	11'-6	8	4390	3820	10.47	6330	5550	9.58
29'	15'-6	3'-0	4'-3	3'-0	8'-3	4'-6	10	12"	12'-0	10	12"	21'-0	6	12"	14'-3	38	28'-9	8	12"	11'-3	7	8	6"	11'-9	9	4580	3980	10.73	6610	5800	9.79
30'	16'-0	3'-3	4'-3	3'-2	8'-7	4'-8	10	12"	13'-0	10	12"	22'-3	6	12"	14'-3	38	29'-9	8	12"	11'-6	8	8	6"	11'-9	9	4860	4230	10.94	7040	6180	9.97

⊕ Total number of bars in cross section.

QUANTITIES

CASE I			
H	Concrete C.Y./Ln.Ft.	Steel Lbs./Ln.Ft.	Steel (Horiz. Lap) Lbs./Splice
4'	.30	27	10
5'	.35	31	12
6'	.40	33	12
7'	.45	38	14
8'	.53	42	15
9'	.61	44	15
10'	.67	53	17
11'	.72	57	19
12'	.80	66	20
13'	.86	78	21
14'	.96	84	22
15'	1.04	92	23
16'	1.16	108	25
17'	1.25	119	26
18'	1.37	128	26
19'	1.50	153	29
20'	1.61	171	30
21'	1.75	185	30
22'	1.90	203	32
23'	2.09	229	33
24'	2.29	236	34
25'	2.54	248	36
26'	2.84	264	37
27'	3.16	279	37
28'	3.50	294	38
29'	3.85	317	40
30'	4.22	328	41

LIMIT STATE NOTES:

qtveu-SERV = Total equivalent uniform vertical bearing stress to be used only for the evaluation of settlement based on the Service I Limit State as per ADOT SF-1.

qnveu-SERV = Net equivalent uniform vertical bearing stress to be used only for the evaluation of settlement based on the Service I Limit State as per ADOT SF-1.

B' SERV = Effective footing width to be used only for the evaluation of settlement based on the Service I Limit State as per ADOT SF-1.

qtveu-STR = Total equivalent uniform vertical bearing stress to be used only for the evaluation of bearing resistance based on the Strength I Limit State as per ADOT SF-1.

qnveu-STR = Net equivalent uniform vertical bearing stress to be used only for the evaluation of bearing resistance based on the Strength I Limit State as per ADOT SF-1.

B' STR = Effective footing width to be used only for the evaluation of bearing resistance based on the Strength I Limit State as per ADOT SF-1.

For other applicable limit states, perform project specific-analysis using the procedures in ADOT SF-1. ADOT SF-1 (Materials Group memorandum) is found at Materials Group website.

QUANTITIES NOTE:

Quantities are shown for information purposes only. The pay item is measured per square foot of wall.

Quantities are for one L.F. of wall except for horizontal steel lap splices and footing steps.

Steel quantities for horizontal lap splices shall be added for wall segments greater than 30 feet, and add a splice for each additional wall segment greater than 30 feet. Horizontal 1'-0 lap splices occur at construction or contraction joints.

Steel and concrete quantities for footing steps shall be added to those shown in the table.

JOINT NOTES:

All retaining walls shall have construction joints or contraction joints spaced at not more than 30'-0 apart or as shown. Contraction joints may be substituted for construction joints for wall pours longer than 30'-0.

Expansion joints shall be provided at intervals not exceeding 90'-0.

Footings may be continuous with no joints (except at footing step locations).

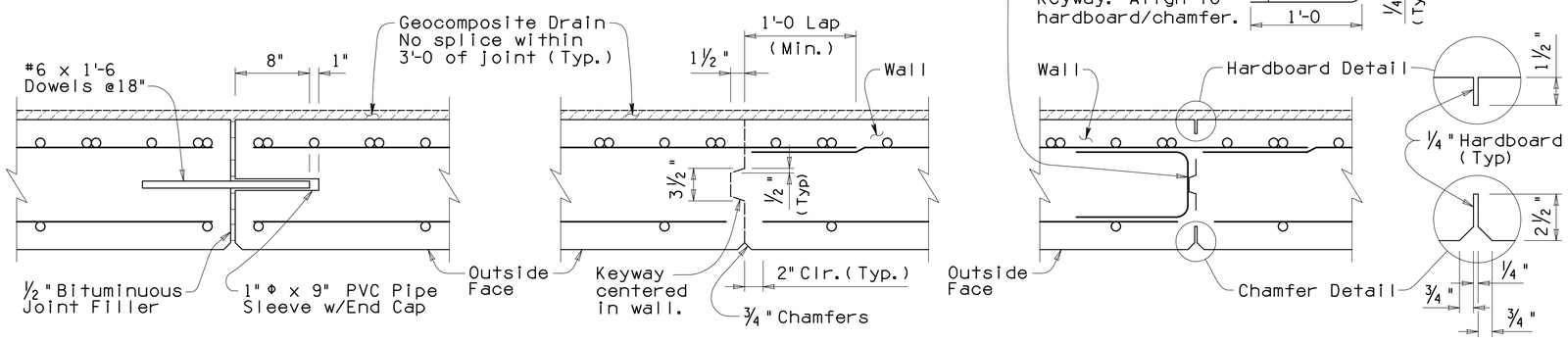

TYPICAL EXPANSION JOINT DETAIL

CONSTRUCTION JOINT DETAIL

CONTRACTION JOINT DETAIL

Bar Size	Dimension A	Dimension D
5	1'-0	3 3/4"
6	1'-0	4 1/2"
7	1'-2	5 1/4"
8	1'-4	6"
9	1'-8	9"
10	1'-10	10"
11	2'-0	11"

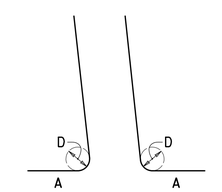

S2 BAR S1 BAR

NOTE:

For General Notes, Typical Elevations, Sections, and Details see SD 7.01 (1, 3 and 4).

Note to Designer:
The information presented in this Standard Detail has been prepared in accordance with recognized engineering principles and is for general use. It should not be used for specific application without competent professional examination and verification of its suitability and applicability by a licensed professional engineer. Contents within the inner border line shall not be altered.

NO	DESCRIPTION OF REVISIONS	MADE BY	DATE
1	Original Issue	S.U.H.	9-10
2	General update, added limit state values and notes.	D.A.B.	1-15
3	•		
4	•		

ARIZONA DEPARTMENT OF TRANSPORTATION
INTERMODAL TRANSPORTATION DIVISION
BRIDGE GROUP STRUCTURE DETAIL

RETAINING WALL
(REINFORCED CONCRETE CANTILEVER)

ROUTE | PROJECT NO. | FA NO. | DRAWING NO. SD 7.01 (2 of 5)
LOCATION | SHEET NO. 130 OF 203

CASE II-LEVEL FILL WITH 2' SURCHARGE (TRAFFIC)

Dimensions							Steel List																	Service Limit State			Strength Limit State		
							S1			S2			S3			H	V	Y			F1	T			F2					
H	W	B	C	F	E	X	Bar Size	Spacing	Length	Bar Size	Spacing	Length	Bar Size	Spacing	Length	Number ⊕	Length	Bar Size	Spacing	Length	Number ⊕	Bar Size	Spacing	Length	Number ⊕	qtveu-SERV Lbs./Sq.Ft.	qnveu-SERV Lbs./Sq.Ft.	B'SERV Ft.	qtveu-STR Lbs./Sq.Ft.	qnveu-STR Lbs./Sq.Ft.	B'STR Ft.
4'	3'-6	1'-0	1'-0	10"	1'-8	1'-0	5	12"	5'-6							4	3'-9	5	12"	2'-6	2	5	12"	3'-0	3	980	620	2.79	1420	930	2.64
5'	4'-0	1'-0	1'-2	10"	2'-0	1'-0	5	12"	6'-6							6	4'-9	5	12"	3'-0	2	5	12"	3'-3	3	1090	730	3.18	1580	1100	2.98
6'	4'-6	1'-0	1'-4	10"	2'-4	1'-2	5	12"	7'-6							6	5'-9	5	12"	3'-6	3	5	12"	3'-9	3	1210	850	3.53	1770	1280	3.29
7'	5'-1	1'-2	1'-6	10"	2'-9	1'-4	6	12"	8'-9							8	6'-9	5	12"	3'-9	3	5	12"	4'-0	3	1370	990	3.93	2010	1490	3.65
8'	5'-8	1'-2	1'-8	10"	3'-2	1'-6	6	9"	9'-9							10	7'-9	5	12"	4'-3	3	5	12"	4'-6	3	1470	1090	4.41	2150	1640	4.10
9'	6'-3	1'-2	1'-10	1'-0	3'-5	1'-8	6	9"	10'-9							10	8'-9	5	12"	4'-9	3	5	12"	4'-9	4	1560	1180	4.89	2280	1770	4.55
10'	6'-10	1'-3	2'-0	1'-0	3'-10	1'-9	7	12"	12'-0							12	9'-9	5	12"	5'-3	4	6	12"	5'-3	4	1690	1300	5.35	2470	1940	4.97
11'	7'-6	1'-3	2'-3	1'-0	4'-3	1'-10	6	12"	4'-9	6	12"	12'-9				14	10'-9	5	12"	5'-9	4	7	12"	6'-3	5	1750	1360	5.99	2550	2020	5.59
12'	8'-0	1'-3	2'-3	1'-2	4'-7	2'-0	6	12"	5'-0	6	12"	13'-9				14	11'-9	5	12"	6'-0	4	7	12"	6'-9	5	1840	1450	6.36	2680	2150	5.92
13'	8'-6	1'-3	2'-6	1'-3	4'-9	2'-2	7	12"	7'-6	5	12"	14'-9				16	12'-9	6	12"	6'-6	4	8	12"	7'-9	5	2000	1610	6.70	2910	2390	6.23
14'	9'-0	1'-3	2'-6	1'-4	5'-2	2'-4	7	12"	7'-3	6	12"	15'-9				18	13'-9	6	12"	6'-9	5	8	12"	8'-3	6	2160	1770	7.02	3150	2620	6.53
15'	9'-6	1'-4	2'-9	1'-5	5'-4	2'-6	8	12"	8'-9	6	12"	17'-0				18	14'-9	6	9"	7'-0	5	8	12"	8'-6	6	2280	1880	7.36	3320	2780	6.83
16'	10'-0	1'-5	2'-9	1'-6	5'-9	2'-8	7	12"	7'-0	7	12"	9'-0	6	12"	10'-9	20	15'-9	6	8"	7'-3	5	7	8"	8'-0	6	2470	2060	7.65	3610	3060	7.08
17'	10'-6	1'-6	3'-0	1'-7	5'-11	2'-10	8	12"	8'-0	7	12"	9'-0	6	12"	10'-9	22	16'-9	6	8"	7'-9	5	7	8"	8'-3	6	2590	2170	7.99	3790	3220	7.38
18'	11'-0	1'-7	3'-0	1'-8	6'-4	3'-0	7	10"	7'-6	7	10"	10'-0	6	10"	11'-9	22	17'-9	7	12"	8'-0	6	9	10"	10'-0	7	2790	2360	8.28	4080	3500	7.64
19'	11'-6	1'-8	3'-3	1'-9	6'-6	3'-2	8	12"	8'-0	8	12"	12'-6	6	12"	10'-9	24	18'-9	7	12"	8'-6	6	8	8"	9'-6	7	2900	2460	8.62	4250	3660	7.93
20'	12'-0	1'-9	3'-3	1'-10	6'-11	3'-4	9	12"	9'-6	8	12"	13'-3	6	12"	11'-0	26	19'-9	7	12"	8'-9	6	9	9"	10'-9	7	3110	2660	8.91	4550	3940	8.20
21'	12'-6	1'-10	3'-6	1'-11	7'-1	3'-6	8	10"	9'-0	8	10"	14'-3	6	10"	11'-3	26	20'-9	7	10"	9'-0	6	10	10"	11'-9	7	3220	2760	9.25	4720	4100	8.49
22'	13'-0	1'-11	3'-6	2'-0	7'-6	3'-8	9	12"	10'-0	9	12"	15'-9	6	12"	11'-0	28	21'-9	8	12"	9'-6	6	8	6"	10'-6	7	3420	2950	9.54	5020	4390	8.76
23'	13'-6	2'-0	3'-9	2'-2	7'-7	3'-10	10	12"	12'-9	8	12"	16'-3	6	12"	11'-3	30	22'-9	8	12"	9'-9	7	8	6"	10'-9	7	3540	3060	9.89	5190	4550	9.05
24'	14'-0	2'-2	3'-9	2'-4	7'-11	4'-0	10	12"	11'-6	9	12"	17'-9	6	12"	11'-3	30	23'-9	8	12"	10'-3	7	8	6"	11'-0	8	3780	3280	10.13	5550	4870	9.27
25'	14'-6	2'-4	4'-0	2'-6	8'-0	4'-2	10	12"	12'-6	9	12"	19'-0	6	12"	11'-3	32	24'-9	8	12"	10'-6	7	8	6"	11'-3	8	3930	3410	10.43	5770	5070	9.51
26'	15'-0	2'-6	4'-0	2'-8	8'-4	4'-4	9	10"	11'-6	9	10"	18'-6	6	10"	13'-0	34	25'-9	8	12"	11'-0	7	10	9"	13'-0	9	4170	3630	10.68	6130	5400	9.73
27'	15'-6	2'-9	4'-3	2'-10	8'-5	4'-6	10	12"	12'-3	10	12"	21'-3	6	12"	11'-9	34	26'-9	8	12"	11'-6	8	10	9"	13'-3	9	4360	3790	10.94	6420	5650	9.93
28'	16'-0	3'-0	4'-3	3'-0	8'-9	4'-8	10	12"	13'-3	10	12"	22'-0	6	12"	12'-3	36	27'-9	8	12"	11'-6	8	10	9"	13'-6	9	4640	4040	11.14	6840	6030	10.10
29'	16'-6	3'-3	4'-6	3'-3	8'-9	4'-10	11	12"	16'-3	9	12"	23'-0	6	12"	12'-3	38	28'-9	8	12"	12'-0	8	10	9"	13'-9	9	4830	4200	11.40	7130	6280	10.29
30'	17'-0	3'-6	4'-6	3'-6	9'-0	5'-0	11	12"	15'-9	10	12"	24'-0	6	12"	12'-9	38	29'-9	8	12"	12'-6	8	10	9"	14'-0	10	5120	4460	11.61	7560	6670	10.46

⊕ Total number of bars in cross section.

QUANTITIES

CASE II			
H	Concrete C.Y./Ln.Ft.	Steel Lbs./Ln.Ft.	Steel (Horiz. Lap) Lbs./Splice
4'	.32	28	10
5'	.37	32	12
6'	.42	35	12
7'	.51	43	14
8'	.56	52	15
9'	.65	56	16
10'	.73	65	18
11'	.79	74	20
12'	.88	78	20
13'	.96	93	21
14'	1.05	105	24
15'	1.16	121	24
16'	1.29	127	25
17'	1.41	138	26
18'	1.55	162	28
19'	1.69	169	29
20'	1.83	195	30
21'	1.99	223	30
22'	2.15	233	32
23'	2.35	248	34
24'	2.60	264	34
25'	2.87	276	36
26'	3.14	305	38
27'	3.48	326	38
28'	3.83	337	40
29'	4.25	355	41
30'	4.68	383	42

LIMIT STATE NOTES:

qtveu-SERV = Total equivalent uniform vertical bearing stress to be used only for the evaluation of settlement based on the Service I Limit State as per ADOT SF-1.

qnveu-SERV = Net equivalent uniform vertical bearing stress to be used only for the evaluation of settlement based on the Service I Limit State as per ADOT SF-1.

B' SERV = Effective footing width to be used only for the evaluation of settlement based on the Service I Limit State as per ADOT SF-1.

qtveu-STR = Total equivalent uniform vertical bearing stress to be used only for the evaluation of bearing resistance based on the Strength I Limit State as per ADOT SF-1.

qnveu-STR = Net equivalent uniform vertical bearing stress to be used only for the evaluation of bearing resistance based on the Strength I Limit State as per ADOT SF-1.

B' STR = Effective footing width to be used only for the evaluation of bearing resistance based on the Strength I Limit State as per ADOT SF-1.

For other applicable limit states, perform project specific-analysis using the procedures in ADOT SF-1. ADOT SF-1 (Materials Group memorandum) is found at Materials Group website.

QUANTITIES NOTE:

Quantities are shown for information purposes only. The pay item is measured per square foot of wall.

Quantities are for one L.F. of wall except for horizontal steel lap splices and footing steps.

Steel quantities for horizontal lap splices shall be added for wall segments greater than 30 feet, and add a splice for each additional wall segment greater than 30 feet. Horizontal 1'-0 lap splices occur at construction or contraction joints.

Steel and concrete quantities for footing steps shall be added to those shown in the table.

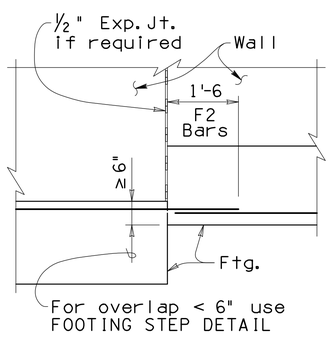

FOOTING DETAIL

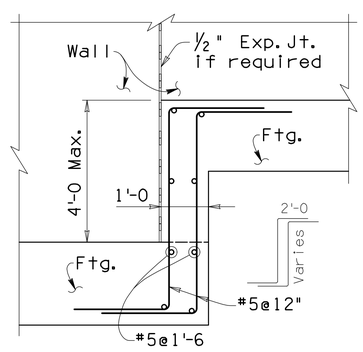

FOOTING STEP DETAIL

NOTE:

For General Notes, Typical Elevations, Sections and Details see SD 7.01 (1, 2, and 4).

ARIZONA DEPARTMENT OF TRANSPORTATION
INTERMODAL TRANSPORTATION DIVISION
BRIDGE GROUP STRUCTURE DETAIL

RETAINING WALL
(REINFORCED CONCRETE CANTILEVER)

ROUTE | PROJECT NO. | FA NO. | DRAWING NO. SD 7.01 (3 of 5)
LOCATION | SHEET NO. 131 OF 203

Note to Designer:
The information presented in this Standard Detail has been prepared in accordance with recognized engineering principles and is for general use. It should not be used for specific application without competent professional examination and verification of its suitability and applicability by a licensed professional engineer. Contents within the inner border line shall not be altered.

NO	DESCRIPTION OF REVISIONS	MADE BY	DATE
1	Original Issue	S.U.H.	9-10
2	General update, added limit state values and notes.	D.B.B.	1-15
3	•		
4			

CASE III - 2:1 (MAX.) SLOPING FILL

Dimensions							Steel List																	Service Limit State			Strength Limit State		
							S1			S2			S3			H	V	Y			F1	T			F2					
H	W	B	C	F	E	X	Bar Size	Spacing	Length	Bar Size	Spacing	Length	Bar Size	Spacing	Length	Number ⊕	Length	Bar Size	Spacing	Length	Number ⊕	Bar Size	Spacing	Length	Number ⊕	q_{tveu}-SERV Lbs./Sq.Ft.	q_{nveu}-SERV Lbs./Sq.Ft.	B'SERV Ft.	q_{tveu}-STR Lbs./Sq.Ft.	q_{nveu}-STR Lbs./Sq.Ft.	B'STR Ft.
4'	3'-0	1'-0	1'-0	10"	1'-2	1'-0	5	12"	5'-6							4	3'-9	5	12"	2'-0	2	5	12"	2'-6	3	960	600	2.52	1320	830	2.44
5'	3'-6	1'-0	1'-0	10"	1'-8	1'-0	5	12"	6'-6							6	4'-9	5	12"	2'-6	2	5	12"	3'-0	3	1140	780	2.90	1570	1080	2.80
6'	4'-2	1'-0	1'-0	10"	2'-4	1'-0	5	12"	7'-6							6	5'-9	5	12"	3'-3	2	5	12"	3'-9	3	1300	940	3.46	1810	1320	3.34
7'	5'-0	1'-2	1'-2	10"	3'-0	1'-3	5	12"	8'-9							8	6'-9	5	12"	3'-9	3	5	12"	4'-3	4	1470	1090	4.19	2040	1530	4.05
8'	5'-9	1'-2	1'-4	10"	3'-7	1'-6	6	12"	9'-9							10	7'-9	5	12"	4'-3	3	6	12"	5'-0	4	1600	1220	4.89	2220	1710	4.73
9'	6'-6	1'-3	1'-6	1'-0	4'-0	1'-9	6	12"	10'-9							10	8'-9	5	12"	4'-9	3	6	9"	5'-6	5	1760	1370	5.55	2450	1930	5.37
10'	7'-3	1'-3	1'-8	1'-0	4'-7	2'-0	7	12"	12'-0							12	9'-9	5	12"	5'-3	4	7	12"	6'-9	5	1890	1500	6.25	2640	2110	6.06
11'	8'-3	1'-4	1'-10	1'-2	5'-3	2'-3	7	12"	13'-0							14	10'-9	5	12"	6'-0	4	8	12"	7'-9	6	2030	1630	7.25	2830	2290	7.04
12'	9'-0	1'-4	2'-0	1'-2	5'-10	2'-6	7	12"	14'-0							14	11'-9	5	12"	6'-6	4	8	12"	8'-6	7	2170	1770	7.95	3020	2480	7.73
13'	9'-9	1'-6	2'-2	1'-4	6'-3	2'-9	6	12"	6'-3	6	12"	15'-0				16	12'-9	5	12"	7'-0	5	8	9"	9'-3	8	2360	1940	8.58	3290	2730	8.34
14'	10'-6	1'-8	2'-4	1'-4	6'-10	3'-0	7	12"	8'-6	6	12"	16'-3				18	13'-9	5	12"	7'-6	5	7	6"	9'-0	8	2550	2110	9.22	3560	2970	8.95
15'	11'-3	1'-10	2'-6	1'-4	7'-5	3'-2	7	14"	6'-6	7	14"	17'-6				18	14'-9	6	14"	8'-3	5	8	7"	10'-9	9	2740	2280	9.86	3830	3210	9.56
16'	12'-0	2'-0	2'-8	1'-6	7'-10	3'-4	7	12"	6'-9	7	12"	10'-3	5	12"	10'-0	20	15'-9	5	12"	8'-9	6	8	6"	11'-0	9	2940	2460	10.49	4110	3460	10.18
17'	12'-6	2'-2	2'-8	1'-6	8'-4	3'-6	8	14"	7'-9	8	14"	11'-0	6	14"	11'-0	22	16'-9	6	14"	9'-3	6	9	7"	12'-0	9	3220	2720	10.72	4510	3840	10.37
18'	13'-0	2'-4	2'-10	1'-6	8'-8	3'-8	8	12"	8'-3	8	12"	11'-6	6	12"	11'-6	22	17'-9	6	12"	9'-6	6	9	6"	12'-6	10	3440	2920	11.02	4830	4130	10.64
19'	13'-6	2'-6	2'-10	1'-8	9'-0	3'-10	9	14"	8'-9	9	14"	13'-6	6	14"	11'-0	24	18'-9	6	12"	9'-9	7	9	6"	13'-0	10	3730	3190	11.24	5260	4530	10.83
20'	14'-0	2'-8	3'-0	1'-10	9'-2	4'-0	9	14"	9'-6	9	14"	14'-3	6	14"	11'-3	26	19'-9	6	12"	10'-3	7	10	7"	13'-6	11	3960	3400	11.53	5590	4840	11.10
21'	14'-6	2'-10	3'-2	2'-0	9'-4	4'-2	9	12"	9'-6	9	12"	14'-9	6	12"	12'-0	26	20'-9	6	12"	10'-6	7	10	6"	14'-0	11	4200	3620	11.82	5930	5150	11.36
22'	15'-0	3'-0	3'-2	2'-2	9'-8	4'-4	9	12"	10'-3	9	12"	15'-9	6	12"	12'-3	28	21'-9	7	12"	11'-0	8	10	6"	14'-6	11	4510	3910	12.04	6380	5570	11.54
23'	15'-8	3'-4	3'-4	2'-4	10'-0	4'-6	9	12"	11'-3	9	12"	16'-9	6	12"	12'-6	30	22'-9	7	12"	11'-6	8	10	6"	14'-9	12	4790	4150	12.48	6780	5920	11.96
24'	16'-4	3'-8	3'-6	2'-6	10'-4	4'-8	10	14"	11'-9	10	14"	19'-0	6	14"	12'-0	30	23'-9	7	12"	12'-0	8	11	7"	15'-9	12	5070	4390	12.93	7190	6270	12.37
25'	17'-0	4'-0	3'-8	2'-9	10'-7	4'-10	10	12"	13'-0	9	12"	19'-3	6	12"	12'-9	32	24'-9	7	12"	12'-6	8	11	6"	16'-6	12	5350	4630	13.38	7590	6620	12.79
26'	17'-6	4'-4	3'-10	3'-0	10'-8	5'-0	10	12"	13'-9	9	12"	20'-3	6	12"	13'-0	34	25'-9	7	12"	13'-0	9	11	6"	17'-0	13	5670	4910	13.59	8060	7030	12.96
27'	18'-0	4'-8	4'-0	3'-3	10'-9	5'-2	10	12"	15'-0	9	12"	21'-3	6	12"	13'-3	34	26'-9	7	12"	13'-0	9	11	6"	17'-6	13	6000	5200	13.81	8540	7460	13.14
28'	18'-8	5'-0	4'-3	3'-6	10'-11	5'-4	10	12"	13'-9	10	12"	22'-9	6	12"	13'-6	36	27'-9	7	12"	13'-6	9	11	6"	17'-9	13	6240	5400	14.29	8890	7760	13.59
29'	19'-4	5'-4	4'-6	3'-9	11'-1	5'-6	10	12"	14'-9	10	12"	24'-0	6	12"	13'-9	38	28'-9	7	12"	14'-0	10	11	6"	17'-9	13	6490	5610	14.77	9250	8060	14.03
30'	20'-0	5'-8	4'-9	4'-0	11'-3	5'-8	10	12"	15'-9	10	12"	25'-3	6	12"	13'-9	38	29'-9	7	12"	14'-6	10	11	6"	18'-0	13	6740	5820	15.25	9600	8360	14.48

⊕ Total number of bars in cross section.

QUANTITIES

CASE III			
H	Concrete C.Y./Ln.Ft.	Steel Lbs./Ln.Ft.	Steel (Horiz. Lap) Lbs./Splice
4'	.30	27	10
5'	.35	31	12
6'	.41	34	12
7'	.50	40	14
8'	.56	50	16
9'	.68	57	16
10'	.74	71	18
11'	.88	84	20
12'	.96	89	21
13'	1.13	107	24
14'	1.28	123	25
15'	1.44	140	26
16'	1.65	154	28
17'	1.81	181	29
18'	1.97	213	30
19'	2.20	229	32
20'	2.44	248	34
21'	2.69	292	34
22'	2.96	314	36
23'	3.35	320	38
24'	3.77	353	38
25'	4.25	400	39
26'	4.72	417	42
27'	5.22	432	42
28'	5.77	459	43
29'	6.35	473	45
30'	6.95	487	45

LIMIT STATE NOTES:

q_{tveu}-SERV = Total equivalent uniform vertical bearing stress to be used only for the evaluation of settlement based on the Service I Limit State as per ADOT SF-1.

q_{nveu}-SERV = Net equivalent uniform vertical bearing stress to be used only for the evaluation of settlement based on the Service I Limit State as per ADOT SF-1.

B'SERV = Effective footing width to be used only for the evaluation of settlement based on the Service I Limit State as per ADOT SF-1.

q_{tveu}-STR = Total equivalent uniform vertical bearing stress to be used only for the evaluation of bearing resistance based on the Strength I Limit State as per ADOT SF-1.

q_{nveu}-STR = Net equivalent uniform vertical bearing stress to be used only for the evaluation of bearing resistance based on the Strength I Limit State as per ADOT SF-1.

B'STR = Effective footing width to be used only for the evaluation of bearing resistance based on the Strength I Limit State as per ADOT SF-1.

For other applicable limit states, perform project specific-analysis using the procedures in ADOT SF-1. ADOT SF-1 (Materials Group memorandum) is found at Materials Group website.

QUANTITIES NOTE:

Quantities are shown for information purposes only. The pay item is measured per square foot of wall.

Quantities are for one L.F. of wall except for horizontal steel lap splices and footing steps.

Steel quantities for horizontal lap splices shall be added for wall segments greater than 30 feet, and add a splice for each additional wall segment greater than 30 feet. Horizontal 1'-0 lap splices occur at construction or contraction joints.

Steel and concrete quantities for footing steps shall be added to those shown in the table.

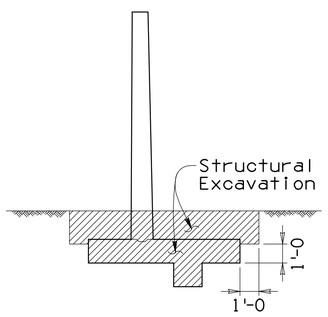

STRUCTURAL EXCAVATION LIMITS

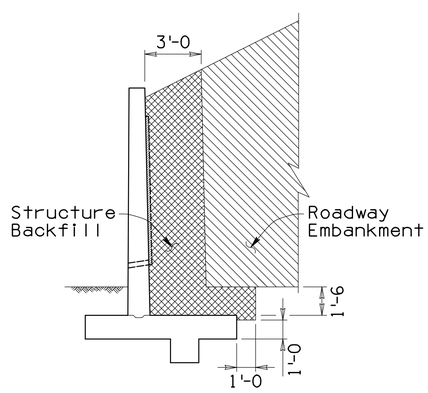

STRUCTURE BACKFILL LIMITS

NOTE:

For General Notes, Typical Elevations, Sections and Details see SD 7.01 (1 to 3).

Note to Designer:
The information presented in this Standard Detail has been prepared in accordance with recognized engineering principles and is for general use. It should not be used for specific application without competent professional examination and verification of its suitability and applicability by a licensed professional engineer. Contents within the inner border line shall not be altered.

NO	DESCRIPTION OF REVISIONS	MADE BY	DATE
1	Original Issue	S.U.H.	9-10
2	General update, added limit state values and notes.	D.A.B.	1-15
3	•		
4			

CHIEF ENGINEER

APPROVED FOR DISTRIBUTION

ARIZONA DEPARTMENT OF TRANSPORTATION
INTERMODAL TRANSPORTATION DIVISION
BRIDGE GROUP STRUCTURE DETAIL

RETAINING WALL
(REINFORCED CONCRETE CANTILEVER)

ROUTE	PROJECT NO.	FA NO.	DRAWING NO.
LOCATION			SD 7.01 (4 of 5)
			SHEET NO. 132 OF 203

CASE IV - ADJACENT TRAFFIC BARRIER

Dimensions							Steel List																	Service Limit State			Strength Limit State		
							S1			S2			S3			H	V	Y			F1	T			F2					
H	W	B	C	F	E	X	Bar Size	Spacing	Length	Bar Size	Spacing	Length	Bar Size	Spacing	Length	Number ⌖	Length	Bar Size	Spacing	Length	Number ⌖	Bar Size	Spacing	Length	Number ⌖	q_{tveu}-SERV Lbs./Sq.Ft.	q_{nveu}-SERV Lbs./Sq.Ft.	B'SERV Ft.	q_{tveu}-STR Lbs./Sq.Ft.	q_{nveu}-STR Lbs./Sq.Ft.	B'STR Ft.
4'	5'-0	1'-0	1'-6	1'-0	2'-6	1'-0	5	12"	5'-6							4	3'-9	5	12"	4'-0	4	5	12"	3'-9	4	1970	1610	2.92	2450	1970	3.09
5'	5'-0	1'-0	1'-6	1'-0	2'-6	1'-0	5	12"	6'-6							6	4'-9	5	12"	4'-0	4	5	12"	3'-9	4	1900	1540	3.27	2350	1860	3.49
6'	5'-6	1'-0	1'-6	1'-0	3'-0	1'-6	5	12"	7'-6							6	5'-9	5	12"	4'-0	4	5	12"	4'-3	4	1610	1250	4.40	2030	1540	4.63
7'	5'-6	1'-3	1'-6	1'-0	3'-0	1'-6	5	12"	8'-9							8	6'-9	5	12"	4'-0	4	5	12"	4'-3	4	1590	1200	4.91	1980	1450	5.22
8'	6'-0	1'-3	1'-9	1'-0	3'-3	1'-8	5	12"	9'-9							10	7'-9	5	12"	4'-6	4	5	12"	4'-6	4	1520	1130	5.72	1950	1420	5.94
9'	6'-6	1'-3	2'-0	1'-1	3'-5	1'-8	5	12"	6'-6	5	12"	10'-9				10	8'-9	5	12"	5'-0	4	5	12"	4'-9	4	1490	1100	6.50	2100	1570	6.12
10'	7'-0	1'-3	2'-0	1'-1	3'-11	1'-10	5	12"	7'-6	5	12"	11'-9				12	9'-9	5	12"	5'-3	5	6	12"	5'-6	5	1670	1280	6.55	2370	1840	6.15
11'	7'-6	1'-3	2'-3	1'-2	4'-1	2'-0	5	12"	8'-6	5	12"	12'-9				14	10'-9	5	12"	5'-6	5	6	12"	5'-9	5	1770	1380	6.82	2520	1990	6.38
12'	8'-0	1'-3	2'-3	1'-2	4'-7	2'-0	6	12"	9'-6	5	12"	13'-9				14	11'-9	5	12"	6'-0	5	7	12"	6'-9	5	1950	1560	6.94	2790	2260	6.48
13'	8'-6	1'-3	2'-6	1'-3	4'-9	2'-2	6	12"	7'-0	6	12"	10'-6	5	12"	5'-6	16	12'-9	6	12"	6'-6	5	8	12"	7'-9	5	2050	1660	7.24	2930	2410	6.74
14'	9'-0	1'-3	2'-6	1'-4	5'-2	2'-4	6	12"	8'-3	6	12"	11'-6	5	12"	5'-6	18	13'-9	6	12"	6'-9	5	9	12"	8'-6	6	2230	1840	7.41	3200	2680	6.89
15'	9'-6	1'-4	2'-9	1'-5	5'-4	2'-6	7	12"	5'-6	7	12"	12'-9	5	12"	5'-6	18	14'-9	6	12"	7'-0	5	9	12"	9'-0	6	2350	1950	7.69	3390	2850	7.13
16'	10'-0	1'-5	2'-9	1'-6	5'-9	2'-8	7	12"	5'-6	7	12"	13'-9	5	12"	5'-6	20	15'-9	6	12"	7'-6	5	8	9"	9'-0	6	2560	2150	7.85	3700	3140	7.27
17'	10'-6	1'-6	3'-0	1'-7	5'-11	2'-10	8	12"	7'-9	7	12"	15'-0	5	12"	5'-6	22	16'-9	7	12"	7'-9	6	8	8"	9'-3	7	2680	2260	8.15	3880	3310	7.52
18'	11'-0	1'-7	3'-0	1'-8	6'-4	3'-0	8	12"	8'-0	8	12"	13'-0	6	12"	9'-3	22	17'-9	7	12"	8'-6	6	8	6"	9'-6	7	2880	2450	8.40	4180	3600	7.75
19'	11'-6	1'-8	3'-3	1'-9	6'-6	3'-2	8	12"	10'-3	8	12"	13'-9	6	12"	9'-3	24	18'-9	7	12"	8'-6	6	8	6"	9'-9	7	2990	2550	8.74	4350	3760	8.04
20'	12'-0	1'-9	3'-3	1'-10	6'-11	3'-4	9	12"	10'-6	8	12"	15'-0	6	12"	9'-3	26	19'-9	7	12"	9'-0	6	8	6"	10'-3	7	3200	2750	9.01	4650	4040	8.29
21'	12'-6	1'-10	3'-6	1'-11	7'-1	3'-6	9	12"	10'-0	9	12"	16'-6	6	12"	9'-3	26	20'-9	7	9"	9'-6	6	8	6"	10'-6	8	3310	2850	9.35	4820	4200	8.58
22'	13'-0	1'-11	3'-6	2'-0	7'-6	3'-8	9	12"	11'-0	9	12"	17'-6	6	12"	9'-3	28	21'-9	7	9"	9'-9	7	9	6"	11'-6	8	3520	3050	9.62	5120	4490	8.83
23'	13'-6	2'-0	3'-9	2'-2	7'-7	3'-10	10	12"	12'-6	9	12"	19'-0	6	12"	9'-3	30	22'-9	8	12"	10'-0	7	9	6"	11'-9	8	3590	3110	9.98	5250	4600	9.14
24'	14'-0	2'-2	3'-9	2'-4	7'-11	4'-0	10	12"	13'-6	9	12"	20'-0	6	12"	9'-3	30	23'-9	8	12"	10'-6	7	9	6"	12'-0	8	3830	3330	10.21	5600	4930	9.34
25'	14'-6	2'-4	4'-0	2'-6	8'-0	4'-2	10	12"	14'-6	9	12"	21'-0	6	12"	9'-3	32	24'-9	8	12"	10'-9	7	9	6"	12'-6	9	4020	3500	10.50	5880	5170	9.58
26'	15'-0	2'-6	4'-0	2'-8	8'-4	4'-4	10	12"	14'-6	10	12"	22'-6	6	12"	9'-3	34	25'-9	8	12"	11'-0	7	10	9"	13'-3	9	4270	3730	10.74	6240	5510	9.79
27'	15'-6	2'-9	4'-3	2'-10	8'-5	4'-6	10	12"	15'-0	10	12"	23'-6	6	12"	10'-3	34	26'-9	8	12"	11'-6	8	10	9"	13'-3	9	4450	3880	11.00	6520	5750	9.99
28'	16'-0	3'-0	4'-3	3'-0	8'-9	4'-8	10	12"	15'-6	10	12"	24'-6	6	12"	11'-3	36	27'-9	8	12"	12'-0	8	10	9"	13'-6	9	4730	4130	11.20	6940	6130	10.16
29'	16'-6	3'-3	4'-6	3'-3	8'-9	4'-10	11	12"	16'-3	9	12"	25'-0	6	12"	12'-3	38	28'-9	8	12"	12'-6	8	10	9"	14'-0	9	4920	4290	11.46	7240	6380	10.36
30'	17'-0	3'-6	4'-6	3'-6	9'-0	5'-0	11	12"	17'-0	10	12"	26'-0	6	12"	12'-9	38	29'-9	8	12"	13'-0	8	10	9"	14'-3	10	5210	4550	11.66	7670	6780	10.52

⌖ Total number of bars in cross section.

QUANTITIES

CASE IV			
H	Concrete C.Y./Ln.Ft.	Steel Lbs./Ln.Ft.	Steel (Horiz. Lap) Lbs./Splice
4'	.40	32	12
5'	.44	35	14
6'	.50	37	14
7'	.58	41	15
8'	.64	44	16
9'	.71	53	16
10'	.77	62	19
11'	.85	67	20
12'	.91	79	20
13'	.99	95	22
14'	1.07	109	24
15'	1.19	119	24
16'	1.31	126	25
17'	1.43	150	28
18'	1.57	179	28
19'	1.71	190	29
20'	1.85	207	30
21'	2.00	232	31
22'	2.16	264	33
23'	2.35	289	34
24'	2.60	301	34
25'	2.86	315	36
26'	3.13	334	38
27'	3.46	345	38
28'	3.81	358	40
29'	4.21	365	41
30'	4.63	401	42

LIMIT STATE NOTES:

q_{tveu}-SERV = Total equivalent uniform vertical bearing stress to be used only for the evaluation of settlement based on the Service I Limit State as per ADOT SF-1.

q_{nveu}-SERV = Net equivalent uniform vertical bearing stress to be used only for the evaluation of settlement based on the Service I Limit State as per ADOT SF-1.

B'SERV = Effective footing width to be used only for the evaluation of settlement based on the Service I Limit State as per ADOT SF-1.

q_{tveu}-STR = Total equivalent uniform vertical bearing stress to be used only for the evaluation of bearing resistance based on the Strength I Limit State as per ADOT SF-1.

q_{nveu}-STR = Net equivalent uniform vertical bearing stress to be used only for the evaluation of bearing resistance based on the Strength I Limit State as per ADOT SF-1.

B'STR = Effective footing width to be used only for the evaluation of bearing resistance based on the Strength I Limit State as per ADOT SF-1.

For other applicable limit states, perform project specific-analysis using the procedures in ADOT SF-1. ADOT SF-1 (Materials Group memorandum) is found at Materials Group website.

QUANTITIES NOTE:

Quantities are shown for information purposes only. The pay item is measured per square foot of wall.

Quantities are for one L.F. of wall except for horizontal steel lap splices and footing steps.

Steel quantities for horizontal lap splices shall be added for wall segments greater than 30 feet, and add a splice for each additional wall segment greater than 30 feet. Horizontal 1'-0 lap splices occur at construction or contraction joints.

Steel and concrete quantities for footing steps shall be added to those shown in the table.

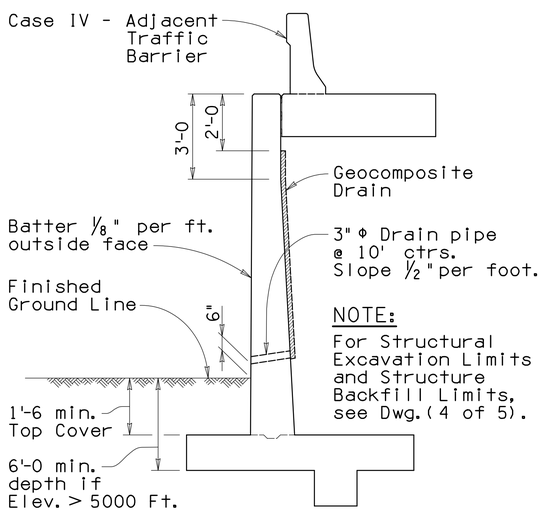

TYPICAL SECTION
(Case IV)

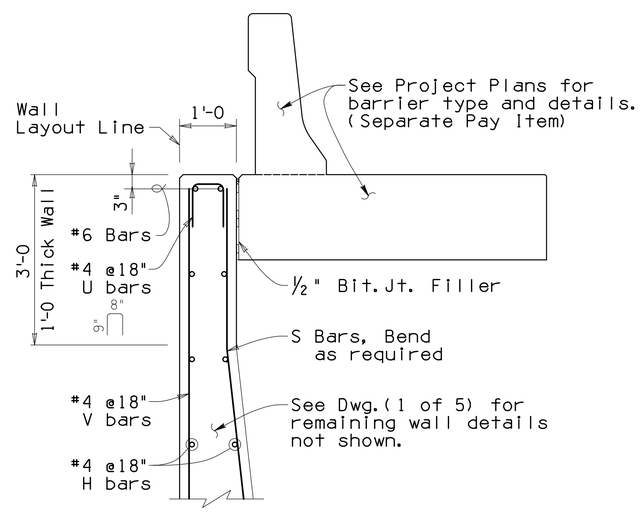

TYPICAL WALL DETAILS
(Case IV)

NOTE:
For General Notes, Typical Elevations, Sections and Details see SD 7.01 (1 to 4).

Note to Designer:
The information presented in this Standard Detail has been prepared in accordance with recognized engineering principles and is for general use. It should not be used for specific application without competent professional examination and verification of its suitability and applicability by a licensed professional engineer. Contents within the inner border lines shall not be altered.

NO	DESCRIPTION OF REVISIONS	MADE BY	DATE
1	Original Issue	S.U.H.	9-10
2	General update, added limit state values and notes.	D.A.B.	1-15
3	•		
4			

ARIZONA DEPARTMENT OF TRANSPORTATION
INTERMODAL TRANSPORTATION DIVISION
BRIDGE GROUP STRUCTURE DETAIL

RETAINING WALL
(REINFORCED CONCRETE CANTILEVER)

ROUTE | PROJECT NO. | FA NO. | DRAWING NO. SD 7.01 (5 of 5)
LOCATION | SHEET NO. 133 OF 203

EROSION AND POLLUTION CONTROL BMP SUMMARY OF QUANTITIES

SYMBOL	BMP	UNIT	QTY.	REFERENCE	BID ITEM NO.
	20" Dia. Sediment Log	L.F.	110	Detail ES1	8100001
	9" Dia. Sediment Wattle	L.F.	11,040	Detail ES2	8100001
	20" Dia. Sediment Wattle	L.F.	3,600	Detail ES2	8100001
	Gradation 'C' Rock Mulch Check Dam Cut/Fill Transition	 C.Y. C.Y.	 312 135	 Detail ES3 Detail ES4	8100001
	Sediment Control Berm	L.F.	2,665	Detail ES5	8100001
Not Shown on Plans	Stabilized Construction Entrance/Exit Gravel Pad	EACH	2	Detail ES6	8100001
Not Shown on Plans	20" Dia. Sediment Log (Discretionary)	L.F.	200	Detail ES1	8100005
Not Shown on Plans	9" Dia. Sediment Wattle (Discretionary)	L.F.	1200	Detail ES2	8100006

GENERAL NOTES:

1. Areas outside of the Project Disturbance Limits shall remain undisturbed. Should additional area require disturbance, the Engineer, Owner and appropriate parties must be notified. Any project related activities or disturbance beyond the Project Disturbance Limits will require historic, cultural, and biological resource compliance to have been included before any disturbance can occur. The Plans and NOI must be updated accordingly and reflect additional BMPs.
2. The project area includes both wetlands and a perennial effluent-dependent waterway (the Santa Cruz River). In addition to the Santa Cruz River, there are several jurisdictional tributary washes within the project limits. The jurisdictional limits and wetland locations are depicted on Sheet EC02 (jurisdictional limits are shaded, and labeled as 'JD Limits'; wetlands are labeled). Work shall not be conducted outside of jurisdictional limits or within wetland areas.
3. TheContractor shall comply with all terms, general conditions and special conditions of the 404 U.S. Army Corps of Engineers Nationwide Permit #14 authorization and the Arizona Department of Environmental Quality Section 401 Certification. These documents are located in Appendix L of the Stormwater Pollution Prevention Plan. These authorizations and general conditions describe what work is permissible within jurisdictional washes and allowable discharges to these waters.
4. Refer to Planting Plans and Specifications for all seeding and granite and rock mulch.
5. Refer to Storm Drain Plans and Cross Drainage Plans for permanent erosion control structures, including headwall and outlet protection.
6. Riprap is shown on plans for reference only, and is part of final stabilization. Refer to Drainage Plans and Details for Riprap locations.
7. All Erosion Control Measures shall be installed within 14 days of establishing rough grade.
8. Disturbed areas where construction is delayed for more than 14 days require Temporary Erosion Control Measures.

GENERAL NOTES (CONTINUED):

9. Rock Check Dams as shown on plans shall be left in place as a final stabilization measure.
10. Sediment Wattles shall be installed on slopes, per Erosion & Pollution Control plans, and per Detail ES2.
11. Ends of Wattles shall be turned at a 45 degree angle upslope, 3' min., Typ.
12. 20" Sediment Logs shall be typically placed every 150 feet, perpendicular to channel or ditch flow, or as indicated on the Erosion & Pollution Control plans.
13. Contractor shall determine final location of Stabilized Construction Entrance/Exit Gravel Pad according to site conditions and/or construction sequencing, with approval from the Engineer. Use of other access points must be approved by the Engineer.
14. Sweeping and/or vacuuming may be required as a secondary measure if trackout is visible.
15. Staging, stockpile, concrete washout, portable toilet, and rain gauge locations shall be identified by Contractor on Erosion Control Plans.
16. Sediment Control Measures shall be installed on all side slope boundaries in lieu of sediment basins. Sediment controls shall be placed on side slope boundaries when adjacent side slope is at lower elevation than project area with potential to receive stormwater runoff. Adjacent slopes at higher elevation than project area do not require perimeter control.
17. Spill response equipment shall be accessible in case of a spill, and located within/near the Containment Area.
18. Quantities shown in Summary of Quantities are for Contractor convenience. Contractor to verify all quantities.
19. All work and materials relating to the BMPs detailed within these Erosion and Pollution Control Plans (Details ES1-ES6) including all materials used for BMPs, all ground preparation, furnishing, installing, maintenance, final removal, and disposal of temporary BMPs, as well as returning the area to an acceptable condition as approved by the Engineer, shall be paid for under Bid Item Number 8100001.
20. No drywells are located within project limits.

Priscilla S. Cornelio, P.E., Director

		Date
Designed	JP	11/15
Drawn	JP	11/15
Checked	LR	11/15
Proj. Engr.	JP	11/15

No.	Revision Description	Engineer	Date

EXPIRES 6-30-2016

WHEAT DESIGN GROUP
LANDSCAPE ARCHITECTS

Arizona Blue Stake
1-800-STAKE-IT
(Call two business days before you dig)

Pima County Department of Transportation

EROSION AND POLLUTION CONTROL PLAN
QUANTITIES & NOTES
SUNSET ROAD - SEGMENT 1
SILVERBELL RD. TO I-10
PROJECT NO. 4RTSUN

SUNSET ROAD - SILVERBELL ROAD TO I-10 - PROJECT NO. 4RTSUN

Scale:

Sheet EC01 of EC07

FILE NAME: M:\Sunset Rd-Sil to Riv-14902-Data\Sheet Files\4RTSUN_EC01.dgn DATE: 11/14/2015 TIME: 8:33:36 AM jpatton

MATCH LINE STA 250+00
SEE SHEET EC06

ES2-20"
2
Wash 4
JD Limits, Typ.
Wash 5
70+00
Wash 5
Wash 10
Wash 11
ES3
ES2-20"
75+00
Santa Cruz River, Wash 1
Wash 6
3
1
ES5
New R/W
ES3
ES5
ES2-20"
ES2-9"
Exist. Silverbell Rd. Const. ℄
Exist. R/W
SILVERBELL RD.
Sunset Rd. Const. ℄
JD Limits, Typ.
Proposed location for Rock Ford Temporary Watercourse Crossing. Final location to be determined by Contractor.
BEGIN PROJECT
SUNSET RD.
STA. 67+69.43
SUNSET RD.
ES5
ES2-20"
ES2-9"
MATCH LINE STA 76+00
SEE SHEET EC03
ES2-20"
2
ES2-9"
ES3
Wash 9
Wetland 7
ES2-20"
3
New R/W
ES3
TEP Easement
WAPA Easement
MATCH LINE STA 257+00
SEE SHEET EC07
1

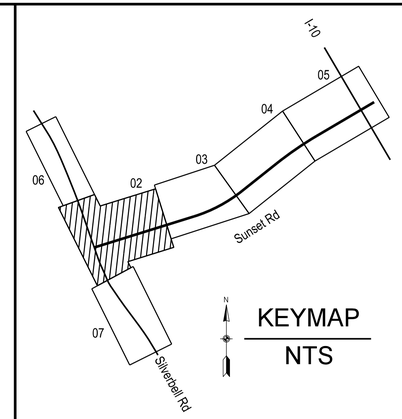

LEGEND

1	Preservation Fencing Refer to Preservation Fencing Plans	-X- -X- -X- -X-
2	Riprap Refer to Drainage Plans	
3	Project Disturbance Limits	

EROSION AND POLLUTION CONTROL BMP SCHEDULE

KEYNOTE	BMP	SYMBOL
ES1	20" Dia. Sediment Log	
ES2-9"	9" Dia. Sediment Wattle	
ES2-20"	20" Dia. Sediment Wattle	
ES3	Check Dam	
ES4	Cut/Fill Transition	
ES5	Sediment Control Berm	
	Flow Arrow	
	Stormwater Discharge Arrow	

NOTES:

1. Refer to Quantities & Notes Sheet, EC01, for quantities and General Notes.
2. Refer to Special Provisions for additional information.
3. Refer to Planting Plans and Specifications for all seeding and granite and rock mulch.
4. Refer to Drainage Plans and Details for permanent erosion control structures and all inlet/outlet protection.
5. Riprap is shown on plans for reference only, and is part of final stabilization. Refer to Drainage Plans and Details for Riprap locations.

40 0 40 80'

Priscilla S. Cornelio, P.E., Director

Designed	JP	11/15
Drawn	JP	11/15
Checked	LR	11/15
Proj. Engr.	JP	11/15

No.	Revision Description	Engineer	Date

SUNSET ROAD – SILVERBELL ROAD TO I-10 – PROJECT NO. 4RTSUN

Pima County Department of Transportation

WHEAT DESIGN GROUP
LANDSCAPE ARCHITECTS

Arizona Blue Stake
1-800-STAKE-IT
1-800-782-5348

EROSION AND POLLUTION CONTROL PLAN
STA. 68+27 TO STA. 76+00
SUNSET ROAD - SEGMENT 1
SILVERBELL RD. TO I-10
PROJECT NO. 4RTSUN

Scale: 1" = 40' | Sheet EC02 of EC07 | Page 135 of 203

FILE NAME: M:\Sunset Rd-Sil to Riv-14902-Data\Sheet Files\4RTSUN_EC02.dgn DATE: 11/14/2015 TIME: 8:33:42 AM jpatton

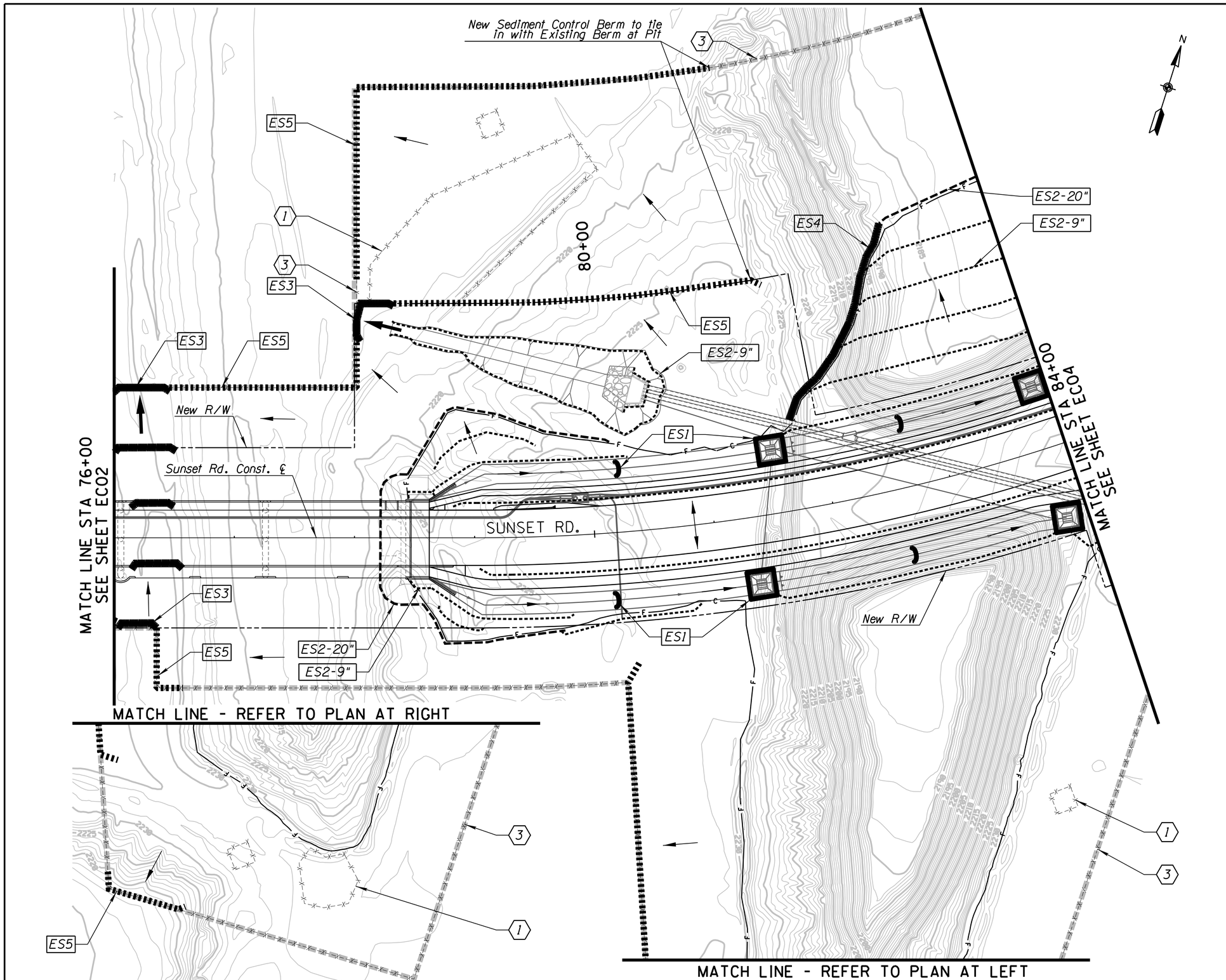

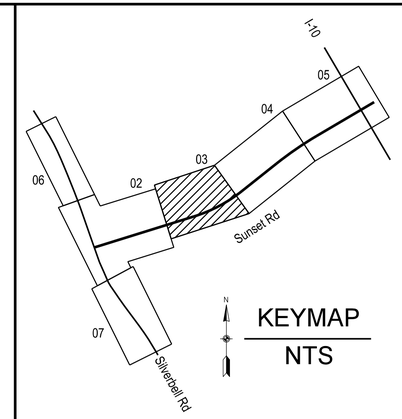

LEGEND

1	Preservation Fencing Refer to Preservation Fencing Plans	
2	Riprap Refer to Drainage Plans	
3	Project Disturbance Limits	

EROSION AND POLLUTION CONTROL BMP SCHEDULE

KEYNOTE	BMP	SYMBOL
ES1	20" Dia. Sediment Log	
ES2-9"	9" Dia. Sediment Wattle	
ES2-20"	20" Dia. Sediment Wattle	
ES3	Check Dam	
ES4	Cut/Fill Transition	
ES5	Sediment Control Berm	
	Flow Arrow	
	Stormwater Discharge Arrow	

NOTES:

1. Refer to Quantities & Notes Sheet, EC01, for quantities and General Notes.
2. Refer to Special Provisions for additional information.
3. Refer to Planting Plans and Specifications for all seeding and granite and rock mulch.
4. Refer to Drainage Plans and Details for permanent erosion control structures and all inlet/outlet protection.
5. Riprap is shown on plans for reference only, and is part of final stabilization. Refer to Drainage Plans and Details for Riprap locations.

40 0 40 80'

Priscilla S. Cornelio, P.E., Director

		Date
Designed	JP	11/15
Drawn	JP	11/15
Checked	LR	11/15
Proj. Engr.	JP	11/15

No.	Revision Description	Engineer	Date

SUNSET ROAD - SILVERBELL ROAD TO I-10 - PROJECT NO. 4RTSUN

WHEAT DESIGN GROUP
LANDSCAPE ARCHITECTS

Arizona Blue Stake
1-800-STAKE-IT
1-800-782-5348

Pima County Department of Transportation

EROSION AND POLLUTION CONTROL PLAN
STA. 76+00 TO STA. 84+00
SUNSET ROAD - SEGMENT I
SILVERBELL RD. TO I-10
PROJECT NO. 4RTSUN

Scale: 1" = 40' | Sheet EC03 of EC07 | Page 136 of 203

FILE NAME: M:\Sunset Rd-Sil to Riv-14902-Data\Sheet Files\4RTSUN_EC03.dgn DATE: 11/14/2015 TIME: 8:33:53 AM jpatton

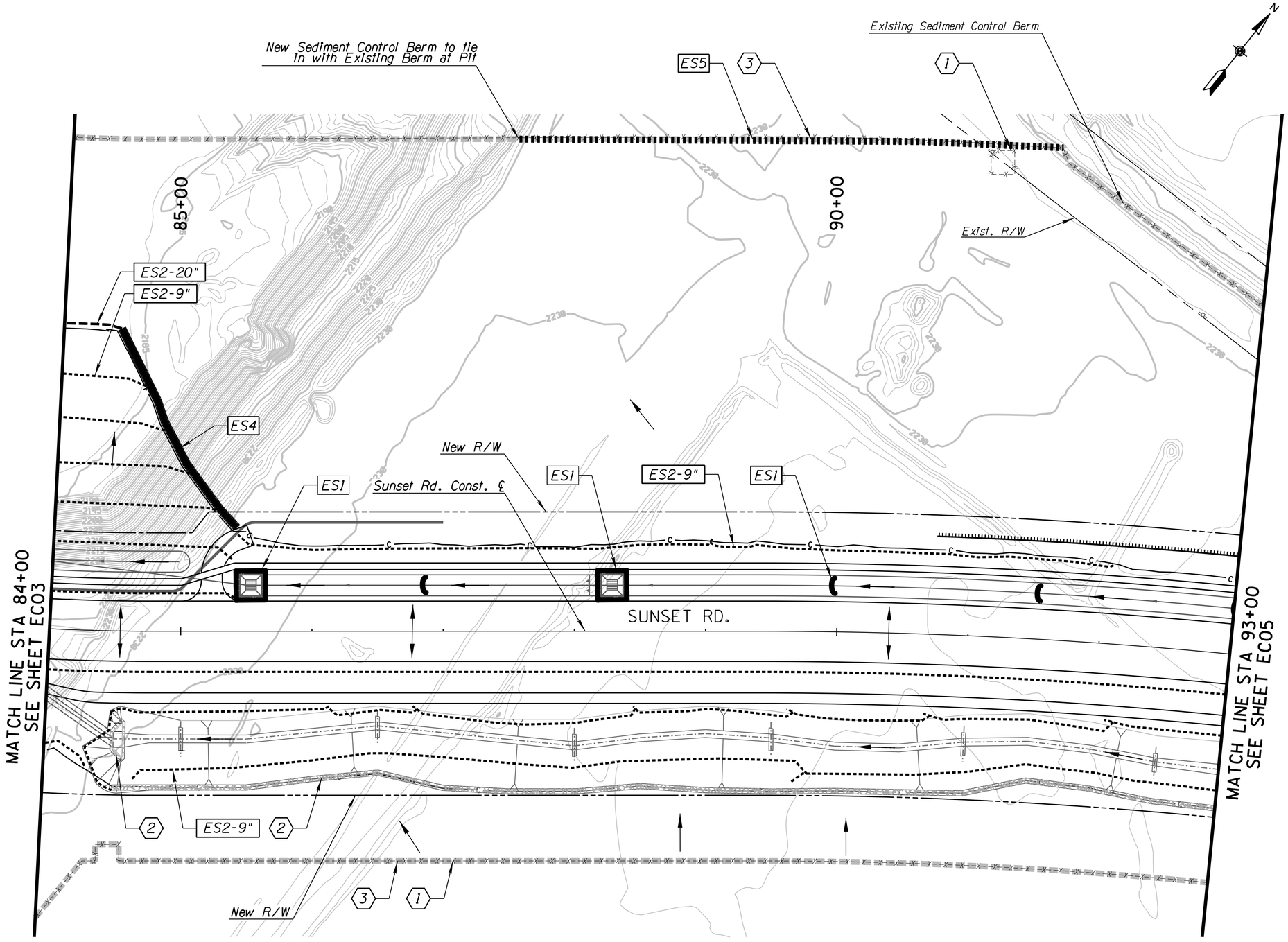

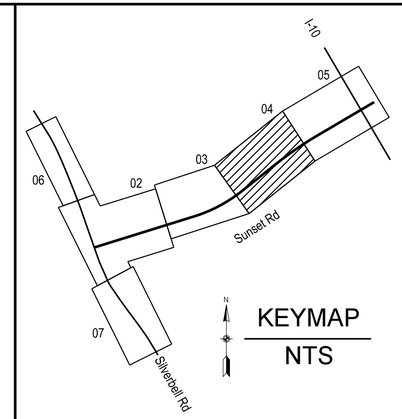

LEGEND

1	Preservation Fencing Refer to Preservation Fencing Plans	-X- -X- -X- -X-
2	Riprap Refer to Drainage Plans	
3	Project Disturbance Limits	

EROSION AND POLLUTION CONTROL BMP SCHEDULE

KEYNOTE	BMP	SYMBOL
ES1	20" Dia. Sediment Log	
ES2-9"	9" Dia. Sediment Wattle	
ES2-20"	20" Dia. Sediment Wattle	
ES3	Check Dam	
ES4	Cut/Fill Transition	
ES5	Sediment Control Berm	
	Flow Arrow	
	Stormwater Discharge Arrow	

NOTES:

1. Refer to Quantities & Notes Sheet, EC01, for quantities and General Notes.
2. Refer to Special Provisions for additional information.
3. Refer to Planting Plans and Specifications for all seeding and granite and rock mulch.
4. Refer to Drainage Plans and Details for permanent erosion control structures and all inlet/outlet protection.
5. Riprap is shown on plans for reference only, and is part of final stabilization. Refer to Drainage Plans and Details for Riprap locations.

40 0 40 80'

Priscilla S. Cornelio, P.E., Director

		Date
Designed	JP	11/15
Drawn	JP	11/15
Checked	LR	11/15
Proj. Engr.	JP	11/15

No.	Revision Description	Engineer	Date

EXPIRES 6-30-2016

WHEAT DESIGN GROUP
LANDSCAPE ARCHITECTS

Arizona Blue Stake
1-800-STAKE-IT
1-800-782-5348

Pima County Department of Transportation

EROSION AND POLLUTION CONTROL PLAN
STA. 84+00 TO STA. 93+00

SUNSET ROAD - SEGMENT 1
SILVERBELL RD. TO I-10
PROJECT NO. 4RTSUN

Scale: 1" = 40' | Sheet EC04 of EC07 | Page 137 of 203

SUNSET ROAD - SILVERBELL ROAD TO I-10 - PROJECT NO. 4RTSUN

FILE NAME: M:\Sunset Rd-Sil to Riv-14902-Data\Sheet Files\4RTSUN_EC04.dgn DATE: 11/14/2015 TIME: 8:33:57 AM jpatton

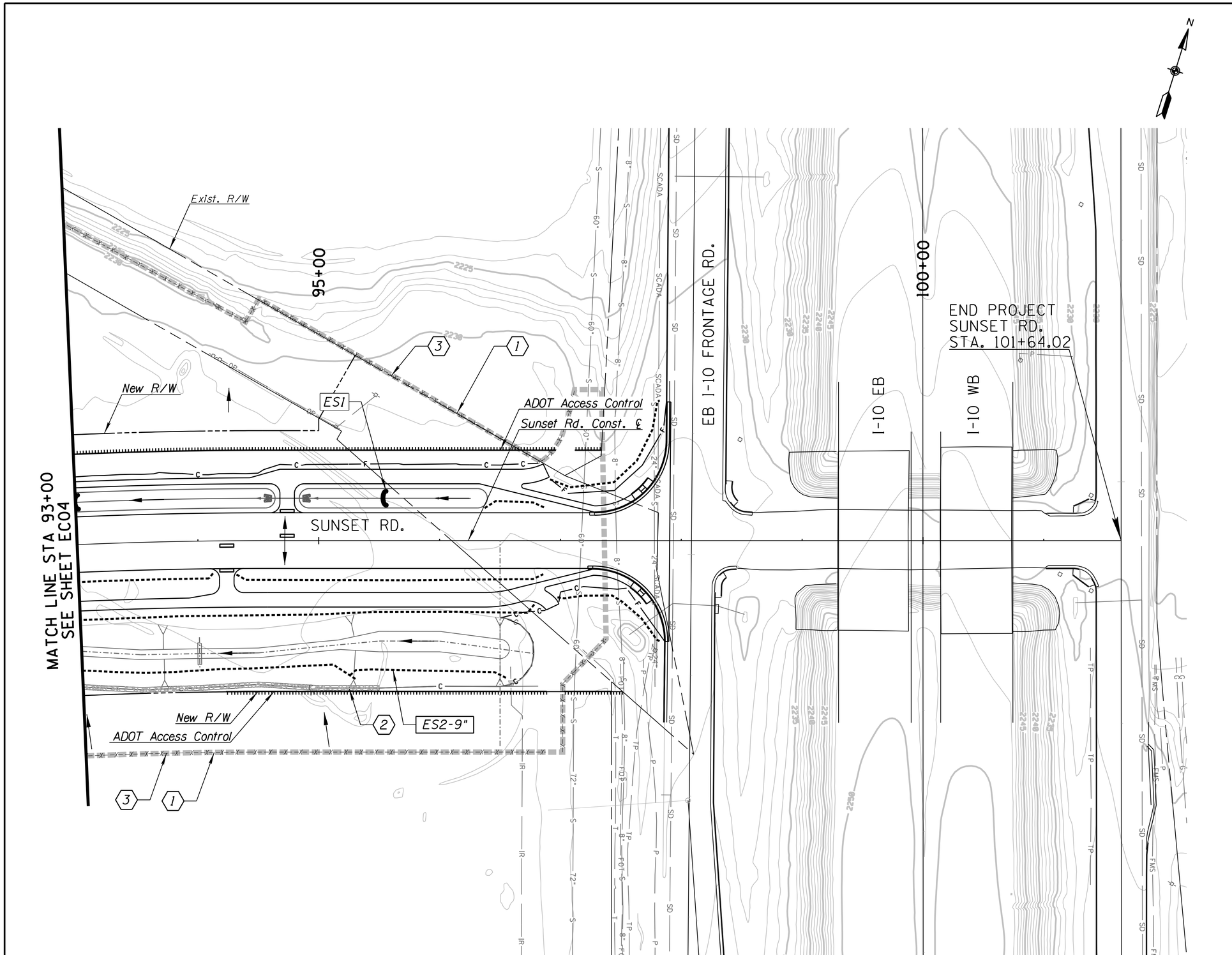

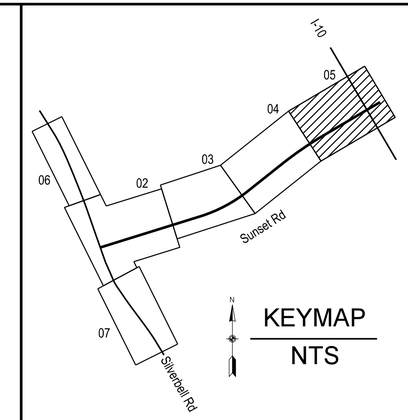

LEGEND

1	Preservation Fencing Refer to Preservation Fencing Plans	-X- -X- -X- -X-
2	Riprap Refer to Drainage Plans	
3	Project Disturbance Limits	

EROSION AND POLLUTION CONTROL BMP SCHEDULE

KEYNOTE	BMP	SYMBOL
ESI	20" Dia. Sediment Log	
ES2-9"	9" Dia. Sediment Wattle	
ES2-20"	20" Dia. Sediment Wattle	
ES3	Check Dam	
ES4	Cut/Fill Transition	
ES5	Sediment Control Berm	
	Flow Arrow	
	Stormwater Discharge Arrow	

NOTES:

1. Refer to Quantities & Notes Sheet, EC01, for quantities and General Notes.
2. Refer to Special Provisions for additional information.
3. Refer to Planting Plans and Specifications for all seeding and granite and rock mulch.
4. Refer to Drainage Plans and Details for permanent erosion control structures and all inlet/outlet protection.
5. Riprap is shown on plans for reference only, and is part of final stabilization. Refer to Drainage Plans and Details for Riprap locations.

40 0 40 80'

Priscilla S. Cornelio, P.E., Director

Designed	JP	11/15
Drawn	JP	11/15
Checked	LR	11/15
Proj. Engr.	JP	11/15

No.	Revision Description	Engineer	Date

Pima County Department of Transportation

WHEAT DESIGN GROUP
LANDSCAPE ARCHITECTS

Arizona Blue Stake
1-800-STAKE-IT
1-800-782-5348

EROSION AND POLLUTION CONTROL PLAN
STA. 93+00 TO STA. 98+00
SUNSET ROAD - SEGMENT 1
SILVERBELL RD. TO I-10
PROJECT NO. 4RTSUN

SUNSET ROAD - SILVERBELL ROAD TO I-10 - PROJECT NO. 4RTSUN

Scale: 1" = 40' | Sheet EC05 of EC07 | Page 138 of 203

FILE NAME: M:\Sunset Rd-Sil to Riv-14902-Data\Sheet Files\4RTSUN_EC05.dgn DATE: 11/14/2015 TIME: 8:34:00 AM jpatton

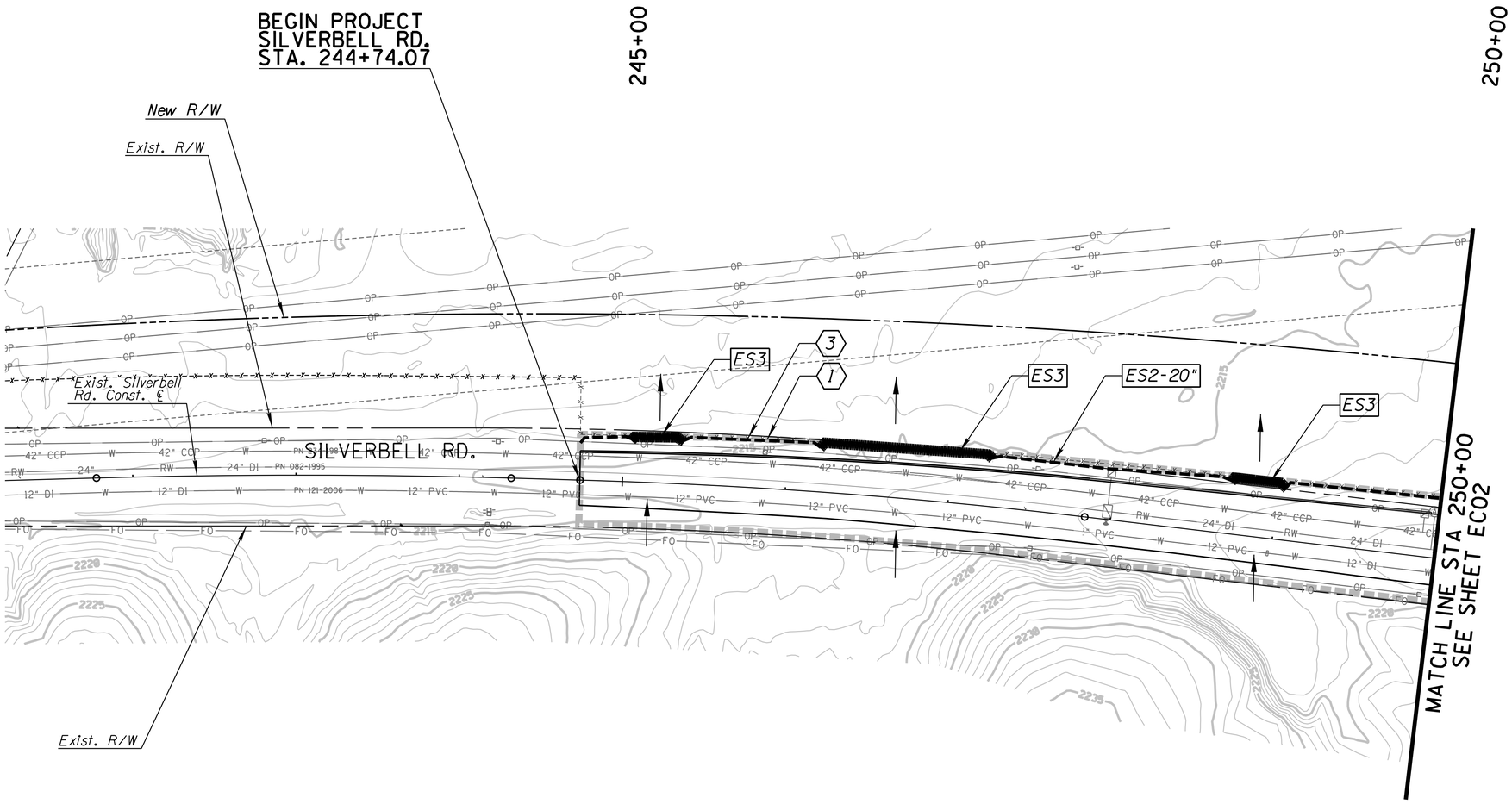

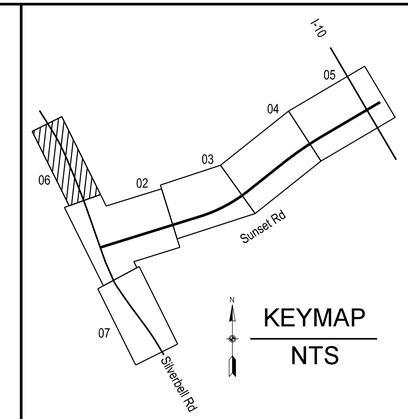

LEGEND

1	Preservation Fencing Refer to Preservation Fencing Plans	–X– –X– –X– –X–
2	Riprap Refer to Drainage Plans	
3	Project Disturbance Limits	

EROSION AND POLLUTION CONTROL BMP SCHEDULE

KEYNOTE	BMP	SYMBOL
ES1	20" Dia. Sediment Log	
ES2-9"	9" Dia. Sediment Wattle	
ES2-20"	20" Dia. Sediment Wattle	
ES3	Check Dam	
ES4	Cut/Fill Transition	
ES5	Sediment Control Berm	
	Flow Arrow	
	Stormwater Discharge Arrow	

NOTES:

1. Refer to Quantities & Notes Sheet, EC01, for quantities and General Notes.
2. Refer to Special Provisions for additional information.
3. Refer to Planting Plans and Specifications for all seeding and granite and rock mulch.
4. Refer to Drainage Plans and Details for permanent erosion control structures and all inlet/outlet protection.
5. Riprap is shown on plans for reference only, and is part of final stabilization. Refer to Drainage Plans and Details for Riprap locations.

40 0 40 80'

Priscilla S. Cornelio, P.E., Director

Pima County Department of Transportation

		Date
Designed	JP	11/15
Drawn	JP	11/15
Checked	LR	11/15
Proj. Engr.	JP	11/15

No.	Revision Description	Engineer	Date

SUNSET ROAD – SILVERBELL ROAD TO I-10 – PROJECT NO. 4RTSUN

WHEAT DESIGN GROUP
LANDSCAPE ARCHITECTS

Arizona Blue Stake
1-800-STAKE-IT
1-800-782-5348

EROSION AND POLLUTION CONTROL PLAN
STA. 244+74.07 TO STA. 250+00
SUNSET ROAD - SEGMENT I
SILVERBELL RD. TO I-10
PROJECT NO. 4RTSUN

Scale: 1" = 40' | Sheet EC06 of EC07 | Page 139 of 203

FILE NAME: M:\Sunset Rd-Sil to Riv-14902-Data\Sheet Files\4RTSUN_EC06.dgn DATE: 11/14/2015 TIME: 8:34:04 AM jpatton

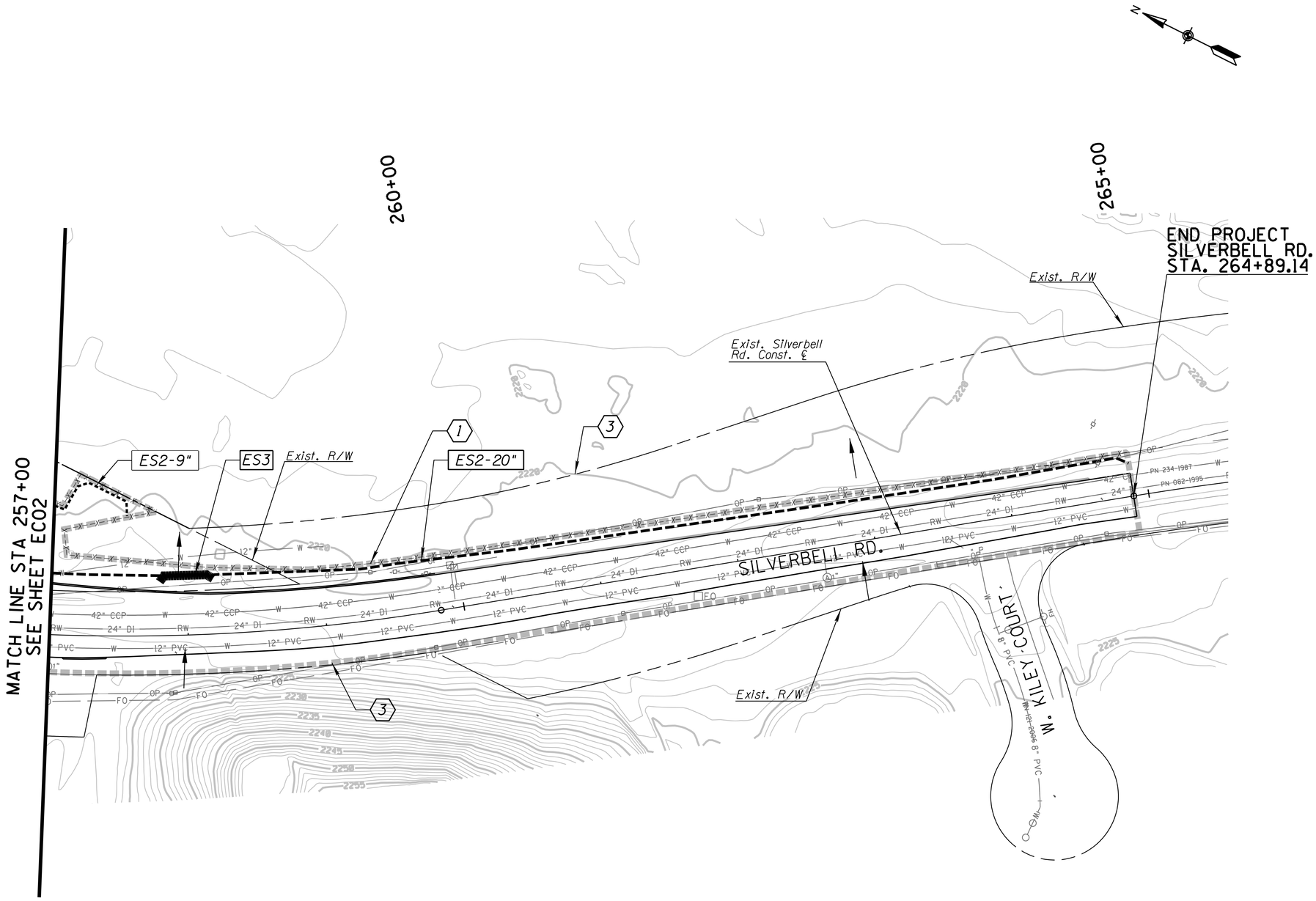

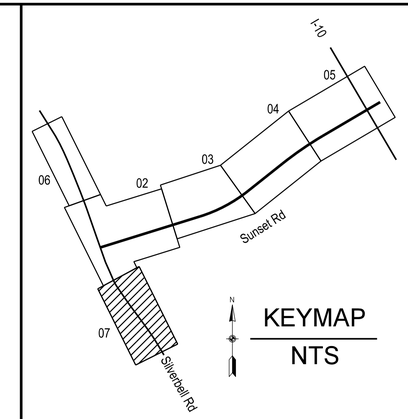

KEYMAP
NTS

LEGEND

1	Preservation Fencing Refer to Preservation Fencing Plans	–X– –X– –X– –X–
2	Riprap Refer to Drainage Plans	
3	Project Disturbance Limits	

EROSION AND POLLUTION CONTROL BMP SCHEDULE

KEYNOTE	BMP	SYMBOL
ES1	20" Dia. Sediment Log	
ES2-9"	9" Dia. Sediment Wattle	
ES2-20"	20" Dia. Sediment Wattle	
ES3	Check Dam	
ES4	Cut/Fill Transition	
ES5	Sediment Control Berm	
	Flow Arrow	
	Stormwater Discharge Arrow	

NOTES:

1. Refer to Quantities & Notes Sheet, EC01, for quantities and General Notes.
2. Refer to Special Provisions for additional information.
3. Refer to Planting Plans and Specifications for all seeding and granite and rock mulch.
4. Refer to Drainage Plans and Details for permanent erosion control structures and all inlet/outlet protection.
5. Riprap is shown on plans for reference only, and is part of final stabilization. Refer to Drainage Plans and Details for Riprap locations.

40 0 40 80'

Pima County Department of Transportation

Priscilla S. Cornelio, P.E., Director

Designed	JP	11/15
Drawn	JP	11/15
Checked	LR	11/15
Proj. Engr.	JP	11/15

No.	Revision Description	Engineer	Date

WHEAT DESIGN GROUP
LANDSCAPE ARCHITECTS

Arizona Blue Stake
1-800-STAKE-IT
1-800-782-5348

EROSION AND POLLUTION CONTROL PLAN
STA. 257+00 TO STA. 264+89.14
SUNSET ROAD - SEGMENT 1
SILVERBELL RD. TO I-10
PROJECT NO. 4RTSUN

SUNSET ROAD - SILVERBELL ROAD TO I-10 - PROJECT NO. 4RTSUN

Scale: 1"=40' | Sheet EC07 of EC07 | Page 140 of 203

FILE NAME: M:\Sunset Rd-Sil to Riv-14902-Data\Sheet Files\4RTSUN_EC07.dgn DATE: 11/14/2015 TIME: 8:34:07 AM jpatton

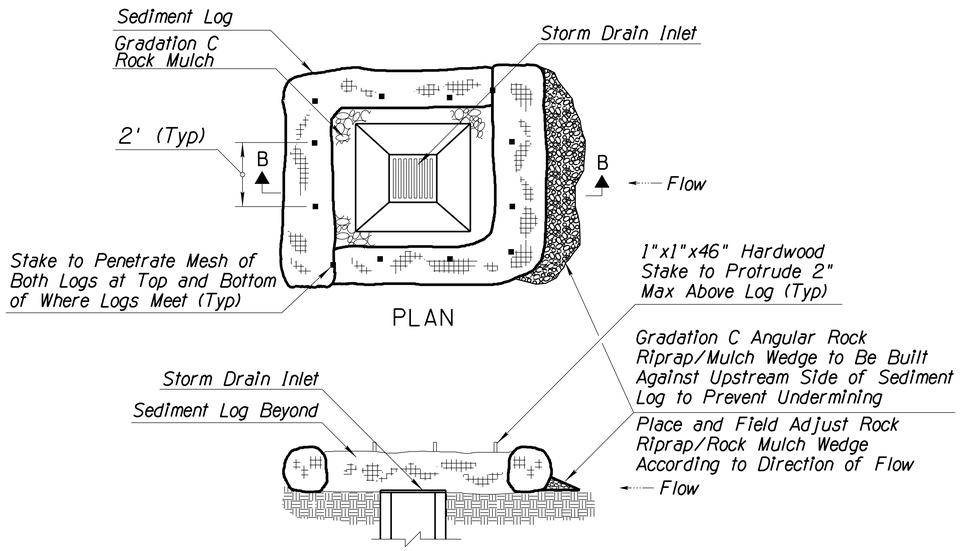

SEDIMENT LOG AT STORM DRAIN
SECTION B-B (NTS)

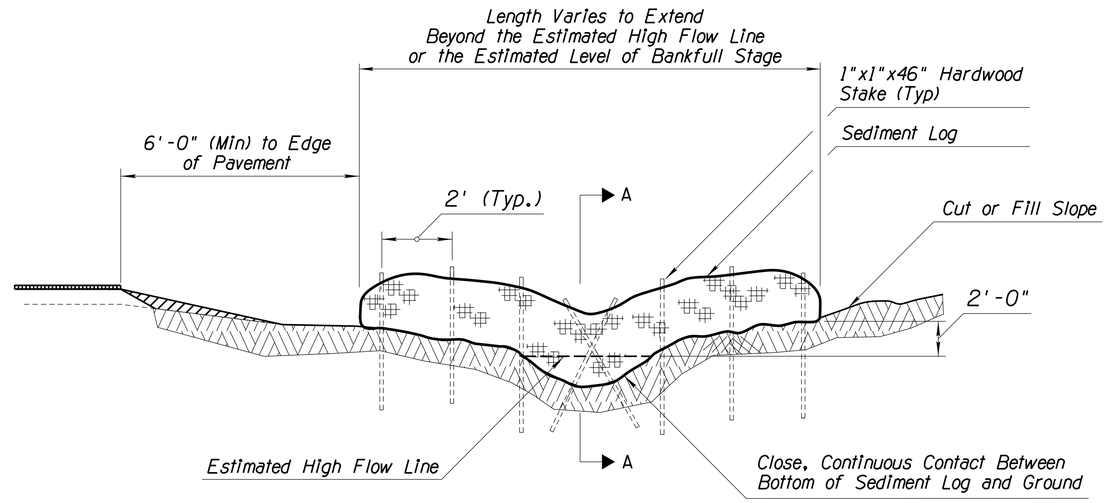

SEDIMENT LOG IN DITCH/CHANNEL
SECTIONAL ELEVATION (NTS)

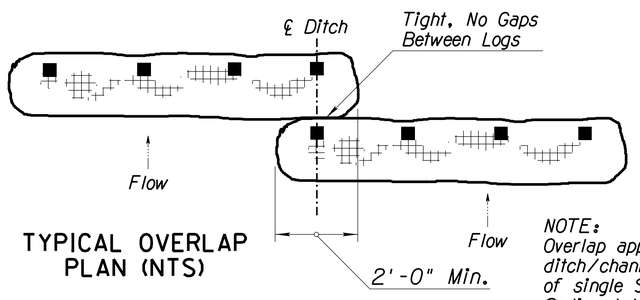

TYPICAL OVERLAP
PLAN (NTS)

NOTE:
Overlap applies to situations where ditch/channel is wider than length of single Sediment Log. Two or multiple Sediment Logs may be necessary.

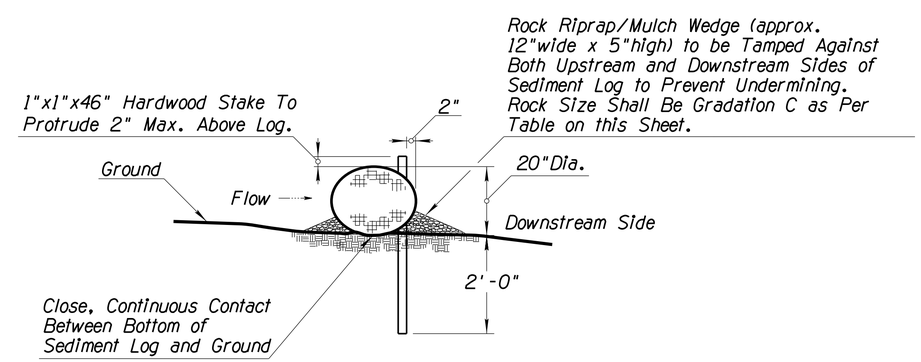

SECTION A-A (NTS)

NOTES:
1. Sediment Logs shall not be installed in the urban freeway medians, nor where cable barrier systems are employed.
2. Locate Sediment Logs as indicated in plans, SWPPP or as directed by the Engineer.
3. Select, install and maintain Logs per manufacturers' specifications and good engineering practices.
4. Lay sediment log across prepared ditch or channel. Trenching or burial of Sediment Logs is not required. The close, continuous contact between the bottom of the Log and the ground is mandatory. The Logs shall be installed in the ditch, swale or channel bottom perpendicular to the flow of water as shown on detail this sheet.
5. Stake Log as shown. Stakes shall be placed through downstream side only as shown.
6. DO NOT drive stakes through center of the log. Stakes must be driven into the ground as shown.
7. Ensure that no gaps exist between soil and bottom of Sediment Log. Repair any rills or undercuts promptly.
8. Placement of Sediment Logs shall be evaluated by the Engineer in rocky soil conditions.
9. Remove Sediment Log BMPs within the ditches/channels and around the storm drain inlets as per the Direction of the Engineer or as soon as practicable upon stabilization of the construction disturbed area.
10. Dispose of Sediment Logs and trapped sediment material and fill trench created by Sediment Log.
11. The installation and maintenance of Sediment Log BMPs shall not negatively impact traffic safety, nor the designed function of roadway or bridge drainage facilities. Sediment Logs shall be installed and maintained to carry the stormwater of at least 2-year, 24-hour events.
12. Field adjust and correct Sediment Log BMP immediately if it is causing flooding, erosion, and/or affecting roadway safety.
13. Install rock mulch/riprap for channel/ditch lining or rock check dams for longitudinal ditch slopes that exceed 5% and/or for soil conditions not suitable for log installation.
14. Refer to Project Specifications Section 810 for Sediment Log material specifications.

ROCK MULCH GRADATION C

Sieve Size	Percent Passing
3.75 Inch	100%
2.5 Inch	50-75%
2 Inch	30-50%
1 Inch	10-20%

DETAIL ES1
SEDIMENT LOG

Scale: N/A | Sheet ECD01 of ECD06 | Page 141 of 203

Pima County Department of Transportation
Priscilla S. Cornelio, P.E., Director

No.	Revision Description	Engineer	Date

		Date
Designed	JP	11/15
Drawn	JP	11/15
Checked	LR	11/15
Proj. Engr.	JP	11/15

EXPIRES 6-30-2016

WHEAT DESIGN GROUP
LANDSCAPE ARCHITECTS

Arizona Blue Stake
1-800-STAKE-IT
1-800-782-5348

EROSION AND POLLUTION CONTROL DETAIL
SUNSET ROAD - SEGMENT I
SILVERBELL RD. TO I-10
PROJECT NO. 4RTSUN

SUNSET ROAD - SILVERBELL ROAD TO I-10 - PROJECT NO. 4RTSUN

FILE NAME: M:\Sunset Rd-Sil to Riv-14902-Data\Sheet Files\4RTSUN_ECD08.dgn DATE: 11/14/2015 TIME: 8:34:08 AM jpatton

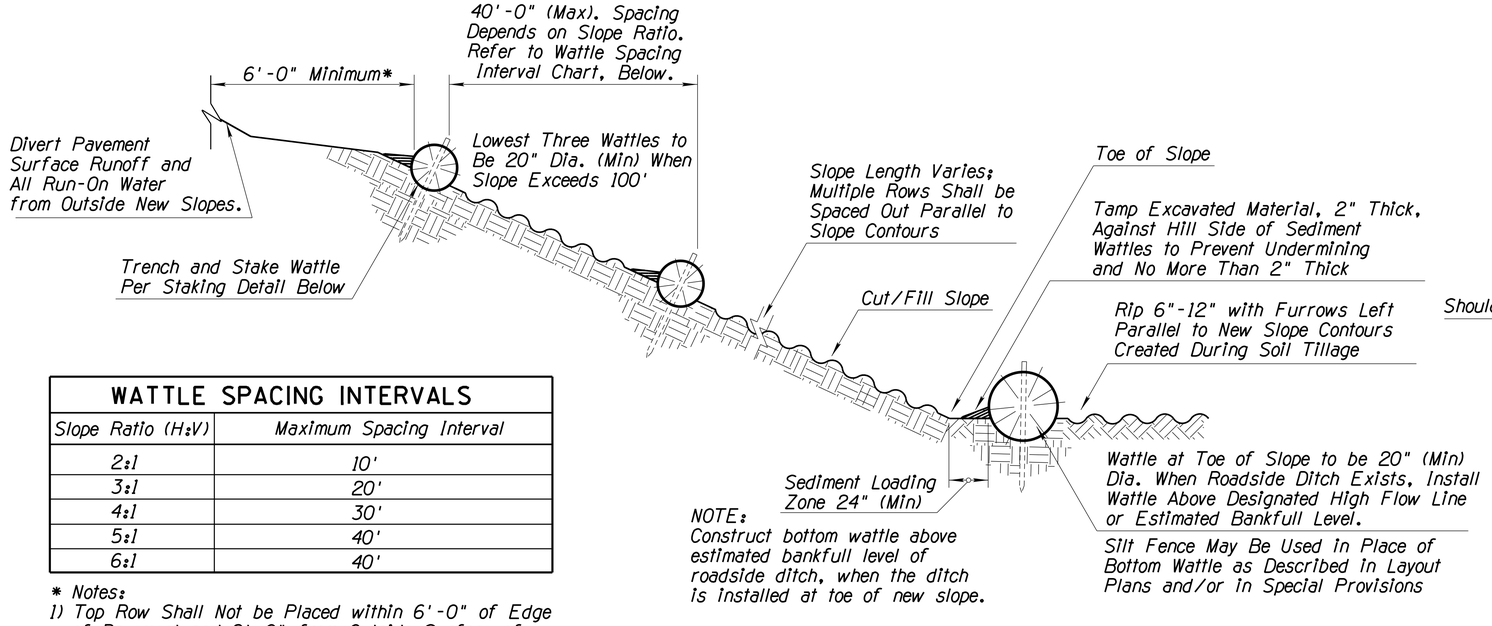

NOTE:
Construct bottom wattle above estimated bankfull level of roadside ditch, when the ditch is installed at toe of new slope.

SECTION (NTS)

WATTLE SPACING INTERVALS	
Slope Ratio (H:V)	Maximum Spacing Interval
2:1	10'
3:1	20'
4:1	30'
5:1	40'
6:1	40'

* Notes:
1) Top Row Shall Not be Placed within 6'-0" of Edge of Pavement and 9'-0" from Outside Surface of Barrier.
2) For erosive soils, place rows of wattles closer together.
3) For soils with low erosive potential, place rows of wattles further apart.

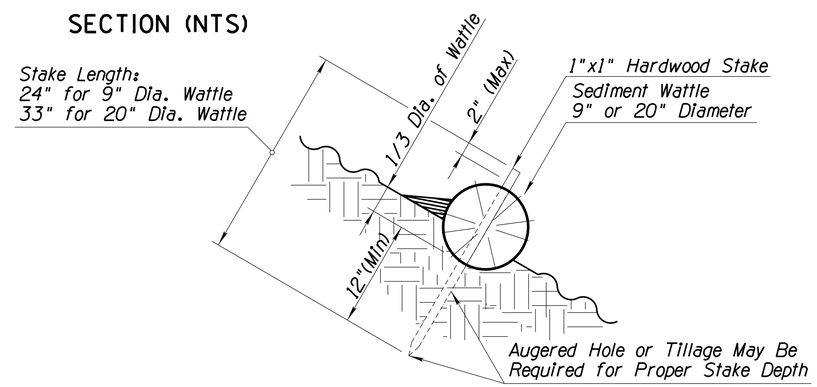

SEDIMENT WATTLE STAKING DETAIL (NTS)

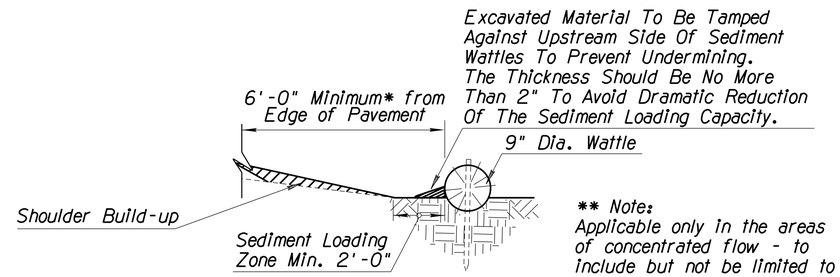

NEW SHOULDER BUILDUP ** PROTECTION SECTION (NTS)

** Note:
Applicable only in the areas of concentrated flow - to include but not be limited to roadway sag spots and drop-off repair locations as per the direction of the Engineer.

NOTES:

1. Install Sediment Wattles as slopes are constructed to grade or as directed by the Engineer. Select, install and maintain in conformance with manufacturers' specifications to meet site conditions for slope protection and in accordance with good engineering practices. No Sediment Wattles shall be installed in urban freeway medians, nor where cable barrier systems are employed.
2. Sediment Wattles shall be in continuous contact with trench bottom and sides. Do not overlap wattle ends on top of each other. A 20" Dia. wattle may be made from 2-3 rolled excelsior or straw blankets.
3. Butt adjoining wattles tightly against each other. Drive the first end stake of the second wattle at an angle toward the first wattle to help abut them tightly.
4. Repair any rills or gullies promptly. Make field adjustments and corrections of Wattle BMP immediately if it is causing flooding, erosion, and/or affecting roadway safety.
5. For seeded areas, tillage shall be performed to form minor ridges and furrows parallel to new slope contours and as specified in Section 805 of the Project Specifications.
6. Divert and direct run-on water from outside of the slopes to the spillways and/or rock riprap/rock mulch. Diversion dikes and/or ditches are necessary on natural undisturbed slopes beyond the top limits of new slopes to divert run-on water.
7. Installation and maintenance of Sediment Wattle BMPs shall not negatively impact traffic safety, nor the designed function of roadway or bridge drainage facilities.
8. Install and maintain Sediment Wattle BMPs to carry the stormwater of at least 2-year, 24-hour events.
9. Refer to Project Specification Section 810 for Sediment Wattle material specifications.
10. Make field adjustments and corrections to ensure NO sensitive biological resources (native species / habitats) will be adversely impacted.

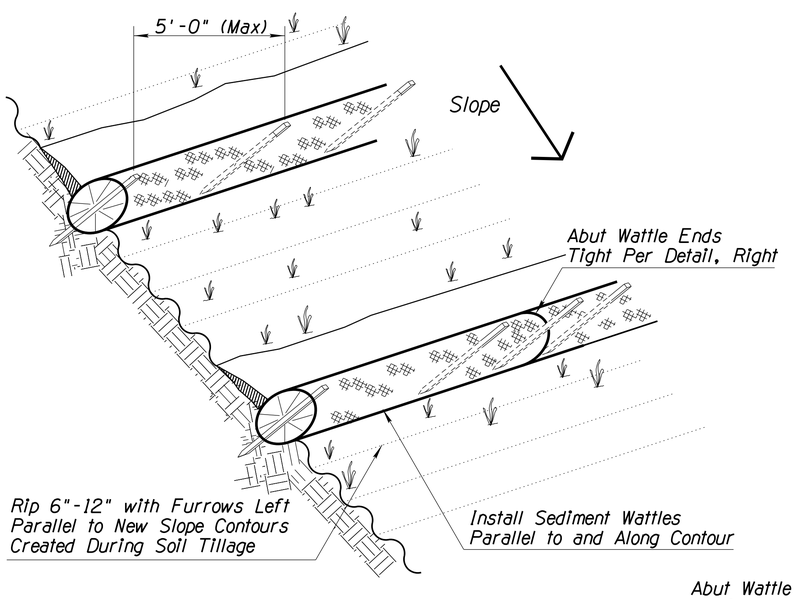

SEDIMENT WATTLE LAYOUT (NTS)

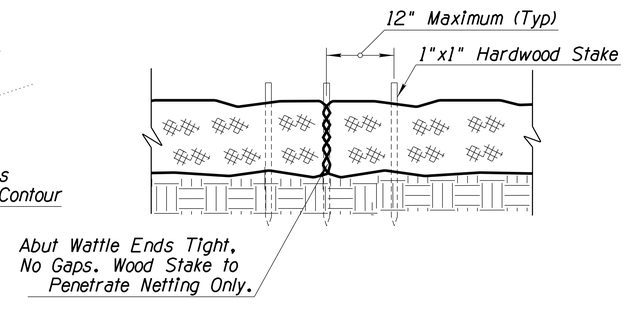

SEDIMENT WATTLE OVERLAP (NTS)

DETAIL ES2
SEDIMENT WATTLE

Pima County Department of Transportation
Priscilla S. Cornelio, P.E., Director

Designed	JP	11/15
Drawn	JP	11/15
Checked	LR	11/15
Proj. Engr.	JP	11/15

No.	Revision Description	Engineer	Date

WHEAT DESIGN GROUP
LANDSCAPE ARCHITECTS

Arizona Blue Stake
1-800-STAKE-IT
1-800-782-5348

EROSION AND POLLUTION CONTROL DETAIL
SUNSET ROAD - SEGMENT I
SILVERBELL RD. TO I-10
PROJECT NO. 4RTSUN

SUNSET ROAD - SILVERBELL ROAD TO I-10 - PROJECT NO. 4RTSUN

Scale: | Sheet ECD02 of ECD06 | Page 142 of 203

FILE NAME: M:\Sunset Rd-Sil to Riv-14902-Data\Sheet Files\4RTSUN_ECD09.dgn DATE: 11/14/2015 TIME: 8:34:09 AM jpatton

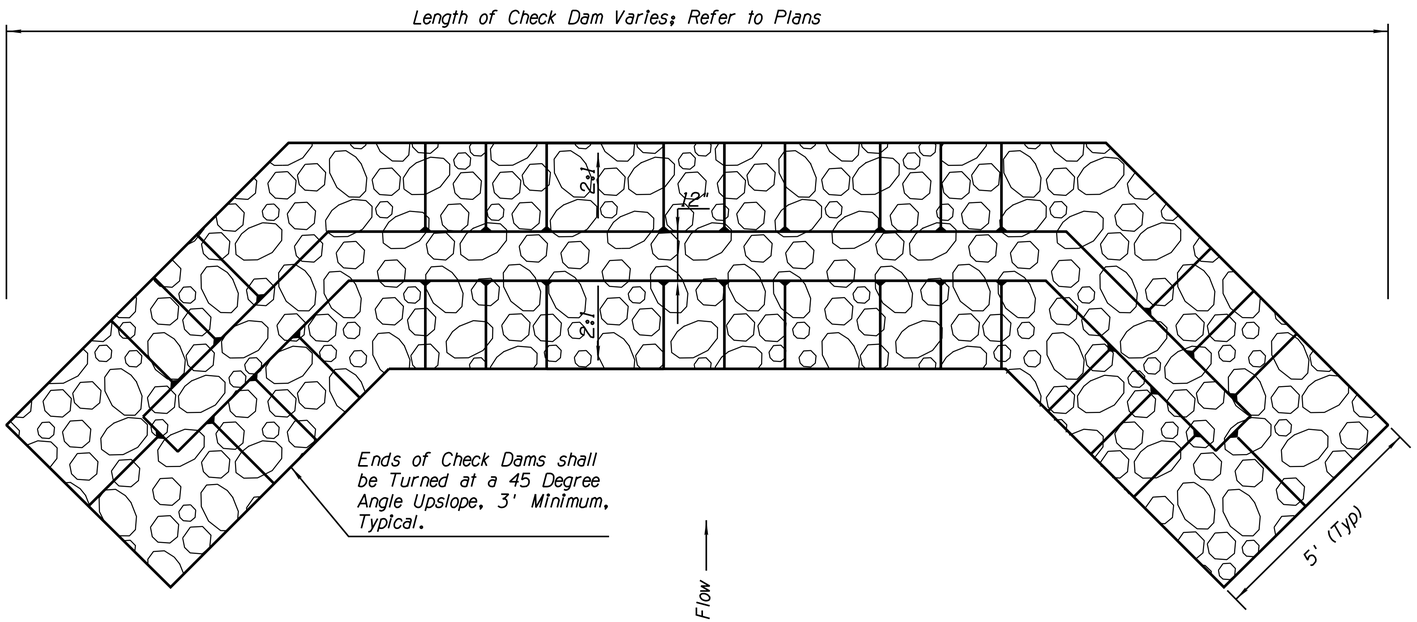

CHECK DAM PLAN VIEW
(NTS)

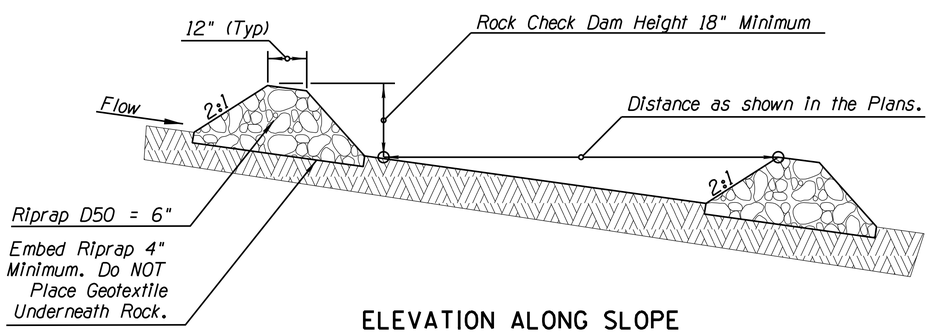

ELEVATION ALONG SLOPE
(NTS)

NOTES:

1. Construct Rock Check Dams with angular-shaped D50 = 6" Riprap. Natural river-run materials such as rounded river rocks/cobblestones and pebbles are NOT acceptable. Refer to Sheet CD03 for Gradation D=6" chart.
2. Do NOT place geotextile material underneath Check Dams.
3. Rock Check Dams shall be left in place throughout the project, and shall not be flattened or removed.
4. Make field adjustments of sizing and spacing of Rock Check Dams as necessary for traffic safety as well as proper functioning of the drainage facilities.
5. Make field adjustments and corrections of Rock Check Dam BMP immediately if it is causing flooding, erosion, and/or affecting roadway safety.
6. Make field adjustments and corrections to ensure NO sensitive biological resources (native species / habitats) will be adversely impacted.

DETAIL ES3
ROCK CHECK DAM

Scale:	N/A	Sheet ECD03 of ECD06	Page 143 of 203

Pima County Department of Transportation

Priscilla S. Cornelio, P.E., Director

Designed	JP	11/15
Drawn	JP	11/15
Checked	LR	11/15
Proj. Engr.	JP	11/15

No.	Revision Description	Engineer	Date

WHEAT DESIGN GROUP
LANDSCAPE ARCHITECTS

Arizona Blue Stake
1-800-STAKE-IT
Call two working days before you dig

EROSION AND POLLUTION CONTROL DETAIL

SUNSET ROAD - SEGMENT I
SILVERBELL RD. TO I-10
PROJECT NO. 4RTSUN

SUNSET ROAD - SILVERBELL ROAD TO I-10 - PROJECT NO. 4RTSUN

FILE NAME: M:\Sunset Rd-Sil to Riv-14902-Data\Sheet Files\4RTSUN_ECD10.dgn DATE: 11/14/2015 TIME: 8:34:10 AM jpatton

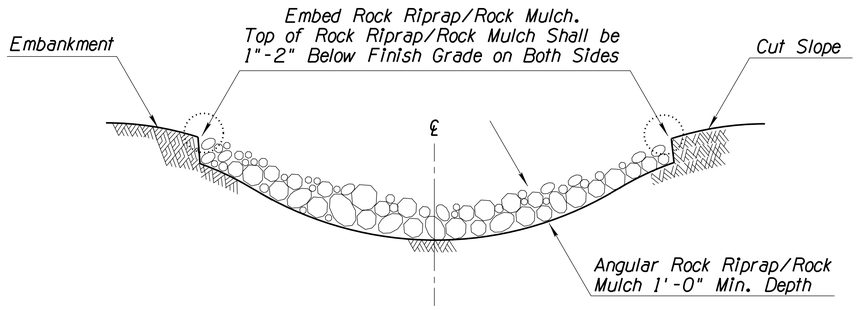

ROCK RIPRAP/ROCK MULCH EMBEDMENT
SECTION A-A (NTS)

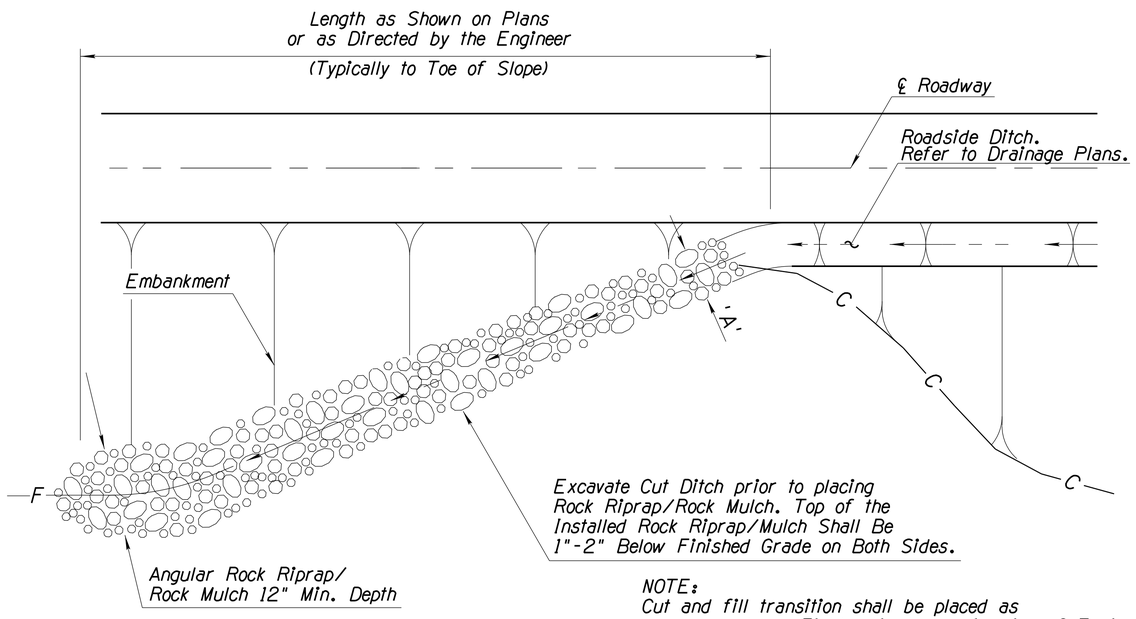

NOTE:
Cut and fill transition shall be placed as
shown on plans. Field adjust per direction of Engineer.

PLAN VIEW (NTS)

NOTES:
1. Riprap shall be D50 = 8" and shall be angular in shape.
2. Install Riprap to a minimum depth of 12" for Cut/Fill Transition. Excavate ground surface to a depth that the top of Rock is 1"-2" below the grade of the ditch.
3. Rock Protection BMPs shall be installed and maintained to carry the stormwater of at least 2-year, 24-hour events.
4. Field adjust and correct Rock Protection BMP immediately if it is causing flooding, erosion, and/or affecting roadway safety.
5. Field adjust to ensure the top surface of Rock Riprap/Rock Mulch is graded lower than the surrounding finished grade to collect surface stormwater runoff and concentrated flow.

DETAIL ES4

ROCK PROTECTION FOR
CUT & FILL PROTECTION

Priscilla S. Cornelio, P.E., Director

Designed	JP	11/15
Drawn	JP	11/15
Checked	LR	11/15
Proj. Engr.	JP	11/15

No.	Revision Description	Engineer	Date

EXPIRES 6-30-2016

WHEAT DESIGN GROUP
LANDSCAPE ARCHITECTS

Arizona Blue Stake
1-800-STAKE-IT
1-800-782-5348
Call two working days before you dig

Pima County Department of Transportation

EROSION AND POLLUTION CONTROL DETAIL

SUNSET ROAD - SEGMENT 1
SILVERBELL RD. TO I-10
PROJECT NO. 4RTSUN

SUNSET ROAD - SILVERBELL ROAD TO I-10 - PROJECT NO. 4RTSUN

Scale:	N/A	Sheet ECD04 of ECD06	Page 144 of 203

FILE NAME: M:\Sunset Rd-Sil to Riv-14902-Data\Sheet Files\4RTSUN_ECD11.dgn DATE: 11/14/2015 TIME: 8:34:10 AM jpatton

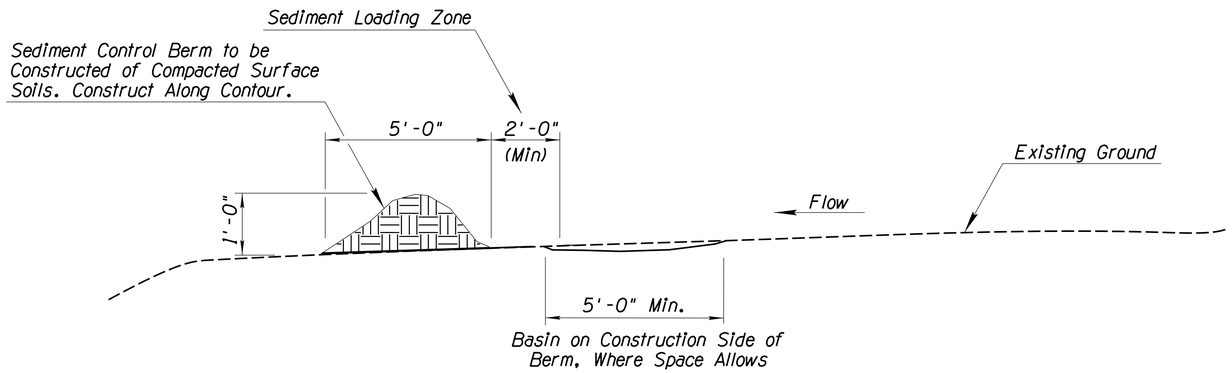

SEDIMENT CONTROL BERM
SECTION (NTS)

NOTES:

1. Locate Sediment Control Berms as indicated on plans or as directed by the Engineer.
2. Berms shall be constructed from compacted soil.
3. Construct Sediment Control Berms on contour.
4. The installation and maintenance of Sediment Control Berm BMPs shall not negatively impact traffic safety, nor the designed function of roadway or bridge drainage facilities. For erosion/sediment control purposes, Sediment Control Berm BMPs shall be installed and maintained to carry the stormwater of at least 2-year, 24-hour events.
5. Remove Sediment Control Berms per the direction of the Engineer or as soon as practicable upon stabilization of the construction disturbed area.
6. Field adjust and correct Sediment Control Berm BMP immediately if it is causing flooding, erosion, and/or affecting roadway safety.

DETAIL ES5

SEDIMENT CONTROL BERM

Priscilla S. Cornelio, P.E., Director

		Date
Designed	JP	11/15
Drawn	IO	11/15
Checked	LR	11/15
Proj. Engr.	JP	11/15

No.	Revision Description	Engineer	Date

Pima County Department of Transportation

WHEAT DESIGN GROUP
LANDSCAPE ARCHITECTS

Arizona Blue Stake
1-800-STAKE-IT
1-800-782-5348

EROSION AND POLLUTION CONTROL DETAIL

SUNSET ROAD - SEGMENT I
SILVERBELL RD. TO I-10
PROJECT NO. 4RTSUN

SUNSET ROAD - SILVERBELL ROAD TO I-10 - PROJECT NO. 4RTSUN

Scale:	N/A	Sheet ECD05 of ECD06	Page 145 of 203

FILE NAME: M:\Sunset Rd-Sil to Riv-14902-Data\Sheet Files\4RTSUN_ECD12.dgn DATE: 11/14/2015 TIME: 8:34:11 AM jpatton

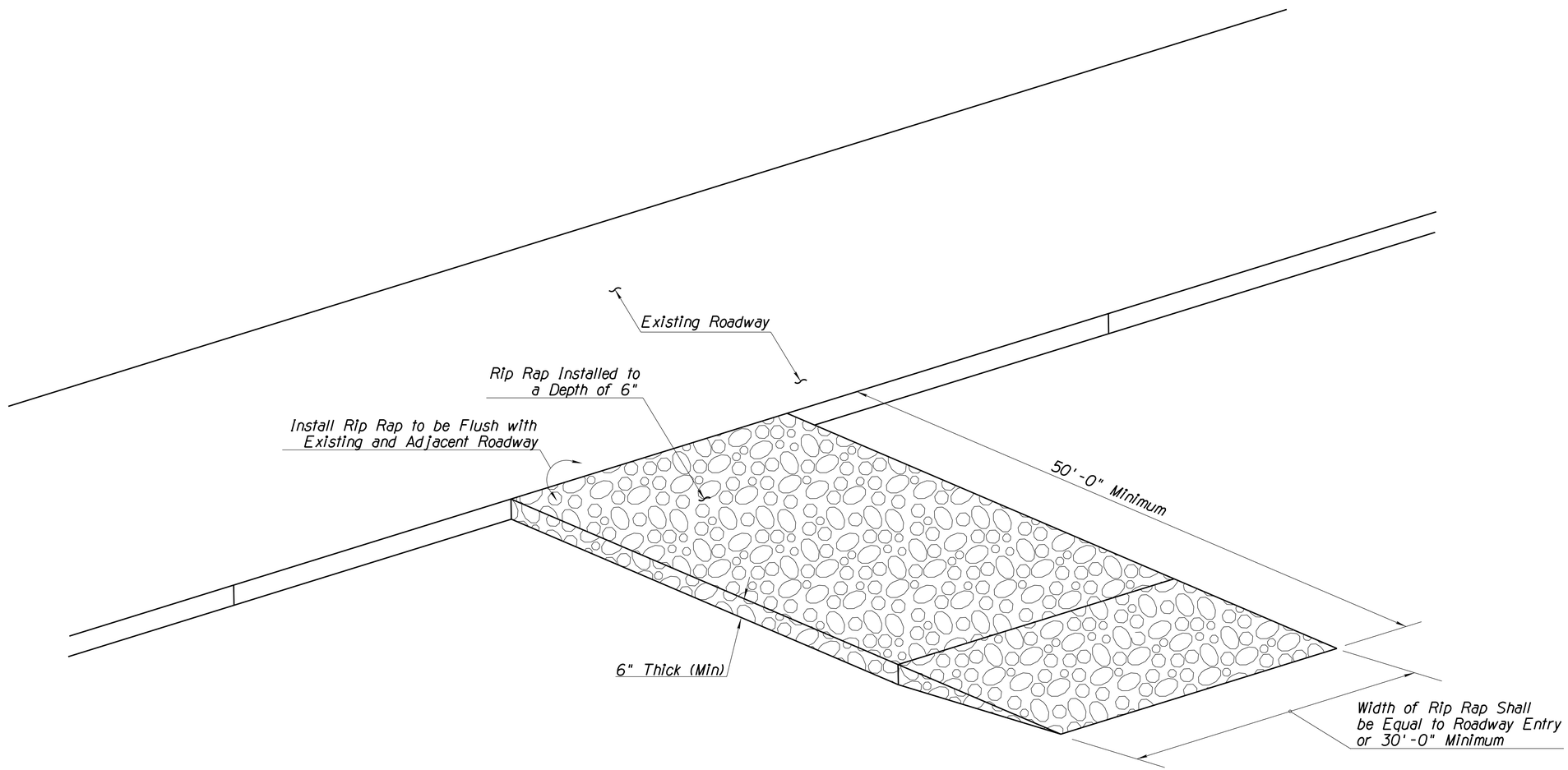

BIRD'S EYE VIEW (NTS)

NOTES:

1. Install Stabilized Construction Entrance/Exit Gravel Pad BMP for traffic entering or exiting a construction site where sedimentation, clay, silt or other pollutants can be tracked onto public roads and/or adjacent water bodies, as approved by the Engineer. It may also be applied for construction entrance/exit wind erosion/dust control, as approved by the Engineer.
2. Locate new Construction Entrance(s)/Exit(s) at appropriate project entrance/exit points as determined in field with the approval of the Engineer. Relocate Stabilized Construction Entrance/Exit Gravel Pad BMP as needed as project progresses. Replace Rip Rap materials in drive paths when dirt or mud accumulates.
3. Rip Rap materials shall be fractured/crushed rocks in angular shape as defined in Section 810 of the Project Specifications. Natural river-run materials, especially rounded natural river rocks, are not acceptable.
4. Field adjust and correct Construction Entrance/Exit Rip Rap Pad BMP immediately if it is causing flooding and/or affecting roadway safety.

DETAIL ES6

STABILIZED CONSTRUCTION ENTRANCE/EXIT GRAVEL PAD

Priscilla S. Cornelio, P.E., Director

Designed	JP	11/15
Drawn	IO	11/15
Checked	LR	11/15
Proj. Engr.	JP	11/15

No.	Revision Description	Engineer	Date

EXPIRES 6-30-2016

WHEAT DESIGN GROUP
LANDSCAPE ARCHITECTS

Arizona Blue Stake
1-800-STAKE-IT
1-800-782-5348

Pima County Department of Transportation

EROSION AND POLLUTION CONTROL DETAIL

SUNSET ROAD - SEGMENT 1
SILVERBELL RD. TO I-10
PROJECT NO. 4RTSUN

SUNSET ROAD - SILVERBELL ROAD TO I-10 - PROJECT NO. 4RTSUN

Scale: N/A | Sheet ECD06 of ECD06 | Page 146 of 203

FILE NAME: M:\Sunset Rd-Sil to Riv-14902-Data\Sheet Files\4RTSUN_ECD13.dgn DATE: 11/14/2015 TIME: 8:34:11 AM jpetton

PLANT SCHEDULE - TREES

SYMBOL	Botanical name / Common name	SIZE	QTY	BID ITEM
	Acacia constricta Whitethorn Acacia	24" Treepot	73	8062024 (AP)
	Acacia greggii Catclaw Acacia	24" Treepot	34	8062024 (AP)
	Celtis reticulata Canyon Hackberry	24" Treepot	29	8062024 (AP)
24	*Chilopsis linearis* Desert Willow	24" Treepot	29	8062024 (AP)
		15 Gallon	10	8061005
		24" Box	13	8061009
		36" Box	15	8061013
	Prosopis pubescens Screwbean Mesquite	24" Treepot	29	8062024 (AP)
		24" Box	12	8061009
36	*Prosopis velutina* Velvet Mesquite	24" Treepot	50	8062024 (AP)
		24" Box	46	8061009
		36" Box	16	8061013
		48" Box	20	8061019

NOTE: Number in symbol indicates box size in inches. A symbol without a number indicates a 24" treepot (TP) or 15 gallon plant. For symbols without a number, planting location of treepot or 15 gallon size plant material are interchangeable at Contractors discretion.

PLANT SCHEDULE - SHRUBS

SYMBOL	Botanical name / Common name	SIZE	QTY	BID ITEM
	Aloysia wrightii Wright's beebrush	15" Treepot	50	8062015 (AP)
	Anisacanthus thurberi Desert Honeysuckle	15" Treepot	67	8062015 (AP)
	Atriplex canescens Four-wing Saltbush	15" Treepot	49	8062015 (AP)
	Calliandra eriophylla Native Fairy Duster	15" Treepot	112	8062015 (AP)
	Celtis pallida Desert Hackberry	15" Treepot	52	8062015 (AP)
	Ericameria laricifolia Turpentine Bush	15" Treepot	15	8062015 (AP)
	Hyptis emoryi Desert Lavender	15" Treepot	60	8062015 (AP)
	Larrea tridentata Creosote	15" Treepot	133	8062015 (AP)
	Lycium berlandieri Wolfberry	15" Treepot	87	8062015 (AP)
	Vauquelinia californica Arizona Rosewood	15" Treepot	24	8062015 (AP)
	Viguiera stenolaba Goldeneye	15" Treepot	19	8062015 (AP)
	Zizyphus obtusifolia Graythorn	5 Gallon	52	8061298

PLANT SCHEDULE - ACCENTS

SYMBOL	Botanical name / Common name	SIZE	QTY	BID ITEM
	Cylindropuntia leptocaulis Christmas Cholla	5 Gal.	20	8061610 (AP)
	Cylindropuntia spinosior Cane Cholla	5 Gal.	15 2	8061610 (AP) 8061611
	Dasylirion wheeleri Desert Spoon	5 Gal.	29	8061305
	Ferocactus wislizenii Fishhook Barrel	5 Gal. 5 Gal.	5 43	8061612 8061614 (AP)
	Fouquieria splendens Ocotillo (Seed Grown)	5 Gal.	15 2	8061654 (AP) 8061655
	Opuntia basilaris Beavertail Prickly Pear	5 Gal.	55	8061610 (AP)
	Opuntia engelmannii Engleman's Prickly Pear	5 Gal.	90	8061610 (AP)
	Opuntia violacea var. santa-rita Purple Prickly Pear	5 Gal.	49 5	8061610 (AP) 8061613
	Yucca baccata Banana Yucca	5 Gal.	30	8061305

NOTE: AP=Agency Provided plants (from the Pima County Native Plant Nursery). Refer to Section 806 of the Project Special Provisions.

SYMBOL LEGEND

SYMBOL	ITEM
	Areas of Existing Vegetation to be Preserved in Place
M-#	Mitigation Area in Accordance with Riparian Habitat Mitigation Plans

SEEDING AND INERT MATERIALS

SYMBOL	ITEM	SIZE/COLOR/NOTES	QTY	BID ITEM
	Seed Mix A - Xeroriparian In combination with RMS as Noted on Plans. No RMS within areas of Drill Seeding.	Hydroseed Drill Seed Second App (Hydroseed)	2.6 AC 13.8 AC	8050004 8050050 8050009
	Seed Mix B - Riparian In combination with RMS as Noted on Plans. No RMS within areas of Drill Seeding.	Hydroseed Drill Seed Second App (Hydroseed)	3.7 AC 5.7 AC	8050004 8050050 8050009
	Seed Mix C - Low Growing In combination with RMS - All locations		2.2 AC	8050004 8050009
RMS	Rock Mulch (Special) Location: As Noted on Plans, in Combination with Seeding. Application: Apply After Preparation of Soil (Section 805) and Prior to Seeding.	Size and Coverage: Refer to Dtl 10, Sheet LD02 Color: Apache Brown, or Approved Equal	12,190 SY	8030029
	Granite Mulch Location: As Shown on Plans at Intersection of Sunset Road and I-10 Frontage Road	Size: 7/8" Screened Color: Apache Brown, or Approved Equal Depth: 2"	865 SY	8030040

NOTES:
1. Refer to Project Specifications and Details for Additional Information.
2. Refer to Sheet LS03 and Plan Sheets for Locations of Drill Seeding.

Gradation Chart: Item 8030040
Granite Mulch, 7/8" Screened

Sieve Size	% Passing
1 inch	100
7/8 inch	80 - 100
1/2 inch	0 - 10

CERTIFICATION STATEMENT REQUIRED BY PCRWRD

This project was designed in accordance with the landscaping and planting guidelines for Public Sewers per Subsection 7.7 of the Pima County Regional Wastewater Reclamation Department Engineering Design Standards 2012.

REGISTERED LANDSCAPE ARCHITECT CERTIFICATE NO. 50915 JENNIFER PATTON Date Signed 3/26/15 ARIZONA, U.S.A. EXPIRES 6-30-2016

ESR PLANT INVENTORY MITIGATION CALCULATIONS

SUNSET ROAD: Silverbell Road to I-10

Disturbed Project Area (AC)	36.75
Plantable Area (AC)	8.66
Preserve in Place (AC)	4.25
ESR Multiplier *(Plantable Area/Disturbed Area)*	0.24

Replacement Diameter: (Total Diameter) * 125% * ESR Multiplier

Species	Total Diameter	Replacement Diameter
Prosopis velutina Velvet Mesquite	2,328.00	698.4 (2328 * 125% * 0.24)

Species	Size Range (inches)	No. of Trees	Percentage as Total No. of Trees	Total No. of Required Caliper Inches	Replacement Container Size	Caliper per Container (inches)	Reqd. Caliper/ Caliper Inches per Container	No. of Mitigation Trees Required	Sizes of Mitigation Trees Used
Prosopis velutina Velvet Mesquite	>12	69	69 trees/213 trees = 32.39%	698.4*32.39%= 226.2	48 inch box	6	226.2/6 = 37.7	38	25
	8 - 12	65	65 trees/213 trees = 30.52%	698.4*30.52%= 213.1	36 inch box	4	213.1/4 = 53.3	53	42
	6-7.9	27	27 trees/213 trees -= 12.68%	698.4*12.68%= 88.5	24 inch box	2.5	88.5/2.5 = 35.4	35	62
	<6	52	52 trees/213 trees -= 24.41%	698.4*24.41%= 170.5	15 gallon container	1	170.5/1 = 170.5	171	268

NOTE: Due to the existing monoculture of native velvet mesquite trees that occured onsite prior to construction, additional tree species have been added to enhance biological diversity and adhere to recommended arborist practice regarding tree species selection.

LANDSCAPE GENERAL NOTES:

1. This Planting Plan is in conformance with the Pima County Roadway Design Manual and Environmentally Sensitive Roadways (ESR) Design Guidelines.
2. It is the intent of the ESR Guidelines that proposed planting will replicate approximate densities and species of existing pre-construction vegetation. All proposed plant species have been selected from the Pima County ESR Approved Plant Species list. The Planting Plan reflects the plant densities and species of adjacent existing vegetative communities.
3. Plants installed within Sight Visibility Triangles (SVTs) shall have a mature height of less than thirty inches (30").
4. Drill seeding will be used in areas that are seed-only. Refer to the Project Special Provisions, Item 8050050.
5. All areas to be seeded shall be prepared with ridges and deep tillage. Refer to the Project Special Provisions, Item 8050050 and Standard Specification Section 805.
6. Seeding limits shown on plans are based on anticipated limits of soil disturbance. Seeding limits shall be field adjusted to match the actual limits of soil disturbance.
7. Trees to be planted a minimum of eight feet (8') from sidewalks. Small/upright trees may be placed a minimum of 4-6' from the edge of sidewalk. Shrubs and accents to be planted a minimum of four feet (4') from sidewalks and face of curb.
8. Trees and shrubs shall be located to avoid conflicts with overhead and underground utilities.
   - Sewer: Tree trunks shall be 16' min. from manholes, and all parts of trees shall be 10' min. from sewer lines. Tree trunks shall be 30' min. from the 60" sewer interconnect at the east end of project.
   - Gas: Tree trunks shall be 8' min. from all gas lines.
   - Electric: Tree trunks shall be 10' min. from all electrical poles.
   - Water: Tree trunks shall be 10' min. from all water lines.
9. WAPA SETBACKS:
   - No trees, large shrubs or plants with thorns (or flower spikes) shall be planted within a 50-foot radius of WAPA Power poles.
   - No trees, large shrubs or plants that produce tall flower spikes shall be planted within the WAPA Easement. No plants, at maturity, shall reach within 22-feet of the power lines at any point.
   - No plants with thorns or flower spikes that could hinder maintenance access shall be planted directly under the lines within the WAPA Easement.

Priscilla S. Cornelio, P.E., Director
Pima County Department of Transportation

		Date
Designed	JP	11/15
Drawn	JP	11/15
Checked	LR	11/15
Proj. Engr.	JP	11/15

No.	Revision Description	Engineer	Date

WHEAT DESIGN GROUP LANDSCAPE ARCHITECTS

Arizona Blue Stake 1-800-STAKE-IT 1-800-782-5348 Call Two Working Days Before You Dig

PLANTING PLAN
SUMMARY SHEET
SUNSET ROAD - SEGMENT I
SILVERBELL RD. TO I-10
PROJECT NO. 4RTSUN

SUNSET ROAD – SILVERBELL ROAD TO I-10 – PROJECT NO. 4RTSUN

Scale: | Sheet LS01 of LS03 | Page 147 of 203

FILE NAME: M:\Sunset Rd-Sil to Riv-14902-Data\Sheet Files\4RTSUN_LS01.dgn DATE: 11/14/2015 TIME: 8:45:33 AM jpatton

SEED MIXES

1. Refer to Planting Plans for Seeding Locations.
2. Refer to Seeding Specifications, Section 805, for Soil Preparation Prior to Seeding and Seeding Requirements.
3. Rock Mulch (Special): Some Areas to be Seeded, as Noted on Plans, Shall Receive Rock Mulch (Special) prior to Seeding. Refer to Specifications (Sections 803 and 805) for Requirements.
4. Quantities and Bid Item Numbers for Seeding and Rock Mulch (Special) are Provided on Sheet LS01.
5. Seed substitutions: Per section 805-2.02 (B) of the Project Specifications, all seed substitutions must be approved, in writing, by the Engineer. Should substitution of seed species be required, the Engineer shall give preference to available seed species from the same category (Shrubs/Grasses/Forbs) from one of the other Project Seed Mixes. For example, if a seed species listed under the Forbs section of the 'Seed Mix A - Xeroriparian' is unavailable, preference shall be given to an available seed species listed under the Forbs section of 'Seed Mix B - Riparian', or 'Seed Mix C - Low Growing'.

Seed Mix A - Xeroriparian

Scientific Name	Common Name	Percent of total	PLS/acre
Trees		**20.00%**	
Acacia constricta	Whitethorn acacia	7.50%	1.50
Acacia greggii	Catclaw acacia	7.50%	1.50
Prosopis velutina	Velvet mesquite	5.00%	1.00
Shrubs		**28.75%**	
Ambrosia deltoidea	Triangle leaf bursage	2.50%	0.50
Atriplex linearis	Narrow-leaf saltbush	2.50%	0.50
Atriplex polycarpa	Cattle saltbush	2.50%	0.50
Calliandra eriophylla	Fairyduster	5.00%	1.00
Encelia frutescens	Brittlebush	3.75%	0.75
Isocoma tenuisecta	Burrowweed	2.50%	0.50
Larrea tridentata	Creosote	10.00%	2.00
Grasses		**32.50%**	
Aristida purpurea	Purple threeawn	2.50%	0.50
Bothriochloa barbinodis	Cane beardgrass	5.00%	1.00
Bouteloua curtipendula 'Vaughn'	Sideoats grama	7.50%	1.50
Bouteloua rothrockii	Rothrock grama	5.00%	1.00
Digitaria californica	Arizona cottontop	2.50%	0.50
Sporobolus cryptandrus	Sand dropseed	5.00%	1.00
Sporobolus wrightii	Sacaton	5.00%	1.00
Forbs		**18.75%**	
Baileya multiradiata	Desert marigold	5.00%	1.00
Dyssodia pentachaeta	Golden dyssodia	2.50%	0.50
Lupinus sparsiflorus	Lupine	3.75%	0.75
Senna covesii	Desert senna	5.00%	1.00
Sphaeralcea ambigua	Desert globemallow	2.50%	0.50
	TOTAL	**100.00%**	**20.00**

Seed Mix B - Riparian

To be used within all Riparian Mitigation Areas and as Shown on Plans

Scientific Name	Common Name	Percent of total	PLS/acre
Trees		**25.00%**	
Acacia constricta	Whitethorn acacia	5.00%	1.00
Acacia greggii	Catclaw acacia	5.00%	1.00
Celtis reticulata	Canyon hackberry	5.00%	1.00
Chilopsis linearis	Desert willow	5.00%	1.00
Prosopis velutina	Velvet mesquite	5.00%	1.00
Shrubs		**20.00%**	
Atriplex canescens	Four-winged saltbush	2.50%	0.50
Calliandra eriophylla	Fairy duster	5.00%	1.00
Celtis pallida	Desert hackberry	5.00%	1.00
Encelia frutescens	Brittlebush	2.50%	0.50
Ericameria laricifolia	Turpentine bush	2.50%	0.50
Lycium fremontii	Wolfberry	2.50%	0.50
Grasses		**30.00%**	
Bouteloua aristidoides	Needle grama	5.00%	1.00
Bouteloua curtipendula	Sideoats grama	5.00%	1.00
Bouteloua rothrockii	Rothrock grama	5.00%	1.00
Setaria macrostachya	Plains bristlegrass	5.00%	1.00
Sporobolus airoides	Alkali sacaton	5.00%	1.00
Sporobolus cryptandrus	Sand dropseed	5.00%	1.00
Forbs		**25.00%**	
Clematis drummondii	Old man's beard	2.50%	0.50
Escholtzia mexicana	Mexican gold poppy	7.50%	1.50
Glandularia gooddingii	Southwestern mock vervain	2.50%	0.50
Lesquerella gordonii	Bladderpod	7.50%	1.50
Sphaeralcia ambigua	Globemallow	5.00%	1.00
	TOTAL	**100.00%**	**20.00**

Seed Mix C - Low Growing

To be used within Sight Visibility Triangles and as Shown on Plans

Scientific Name	Common Name	Percent of total	PLS/acre
Shrubs		**25.00%**	
Ambrosia deltoidea	Triangle leaf bursage	10.00%	2.00
Calliandra eriophylla	Fairyduster	5.00%	1.00
Encelia frutescens	Brittlebush	5.00%	1.00
Isocoma tenuisecta	Burrowweed	5.00%	1.00
Grasses		**40.00%**	
Aristida purpurea	Purple threeawn	5.00%	1.00
Bouteloua aristidoides	Needle grama	5.00%	1.00
Bouteloua curtipendula 'Vaughn'	Sideoats grama	10.00%	2.00
Digitaria californica	Arizona cottontop	5.00%	1.00
Sporobolus cryptandrus	Sand dropseed	10.00%	2.00
Bouteloua rothrockii	Rothrock grama	5.00%	1.00
Forbs		**35.00%**	
Baileya multiradiata	Desert marigold	5.00%	1.00
Dyssodia pentachaeta	Golden dyssodia	2.50%	0.50
Escholtzia mexicana	Mexican gold poppy	5.00%	1.00
Lesquerella gordonii	Bladderpod	2.50%	0.50
Lupinus sparsiflorus	Lupine	2.50%	0.50
Senna covesii	Desert senna	10.00%	2.00
Sphaeralcea ambigua	Desert globemallow	5.00%	1.00
Zinnia acerosa	Desert zinnia	2.50%	0.50
	TOTAL	**100.00%**	**20.00**

Priscilla S. Cornelio, P.E., Director

		Date
Designed	JP	11/15
Drawn	JP	11/15
Checked	LR	11/15
Proj. Engr.	JP	11/15

No.	Revision Description	Engineer	Date

WHEAT DESIGN GROUP
LANDSCAPE ARCHITECTS

Arizona Blue Stake
1-800-STAKE-IT
1-800-782-5348

Pima County Department of Transportation

PLANTING PLAN
SEED MIXES

SUNSET ROAD - SEGMENT I
SILVERBELL RD. TO I-10
PROJECT NO. 4RTSUN

SUNSET ROAD – SILVERBELL ROAD TO I-10 – PROJECT NO. 4RTSUN

Scale: | Sheet LS02 of LS03 | Page 148 of 203

FILE NAME: M:\Sunset Rd-Sil to Riv-14902-Data\Sheet Files\4RTSUN_LS02.dgn DATE: 11/14/2015 TIME: 8:45:36 AM jpatton

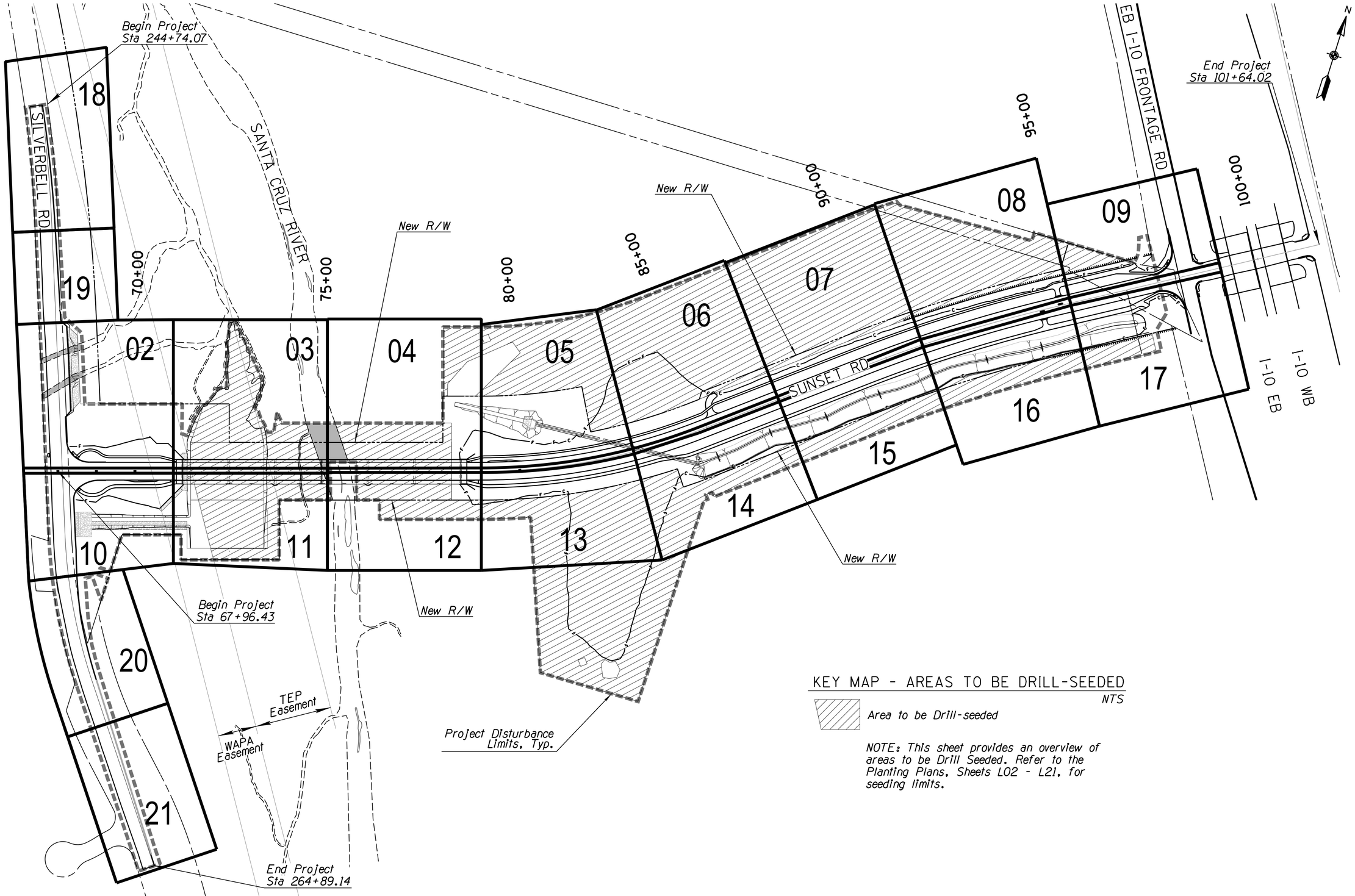

KEY MAP - AREAS TO BE DRILL-SEEDED

NTS

Area to be Drill-seeded

NOTE: This sheet provides an overview of areas to be Drill Seeded. Refer to the Planting Plans, Sheets L02 - L21, for seeding limits.

Priscilla S. Cornelio, P.E., Director

Designed	JP	11/15
Drawn	JP	11/15
Checked	LR	11/15
Proj. Engr.	JP	11/15

No.	Revision Description	Engineer	Date

WHEAT DESIGN GROUP
LANDSCAPE ARCHITECTS

Arizona Blue Stake
1-800-STAKE-IT
1-800-782-5348
Call Two Working Days Before You Dig

Pima County Department of Transportation

PLANTING PLAN
KEY MAP - DRILL SEEDING
SUNSET ROAD - SEGMENT 1
SILVERBELL RD. TO I-10
PROJECT NO. 4RTSUN

SUNSET ROAD - SILVERBELL ROAD TO I-10 - PROJECT NO. 4RTSUN

Scale: | Sheet LS03 of LS03 | Page 149 of 203

FILE NAME: M:\Sunset Rd-Sil to Riv-14902-Data\Sheet Files\4RTSUN_LS03.dgn DATE: 11/14/2015 TIME: 8:45:46 AM jpatton

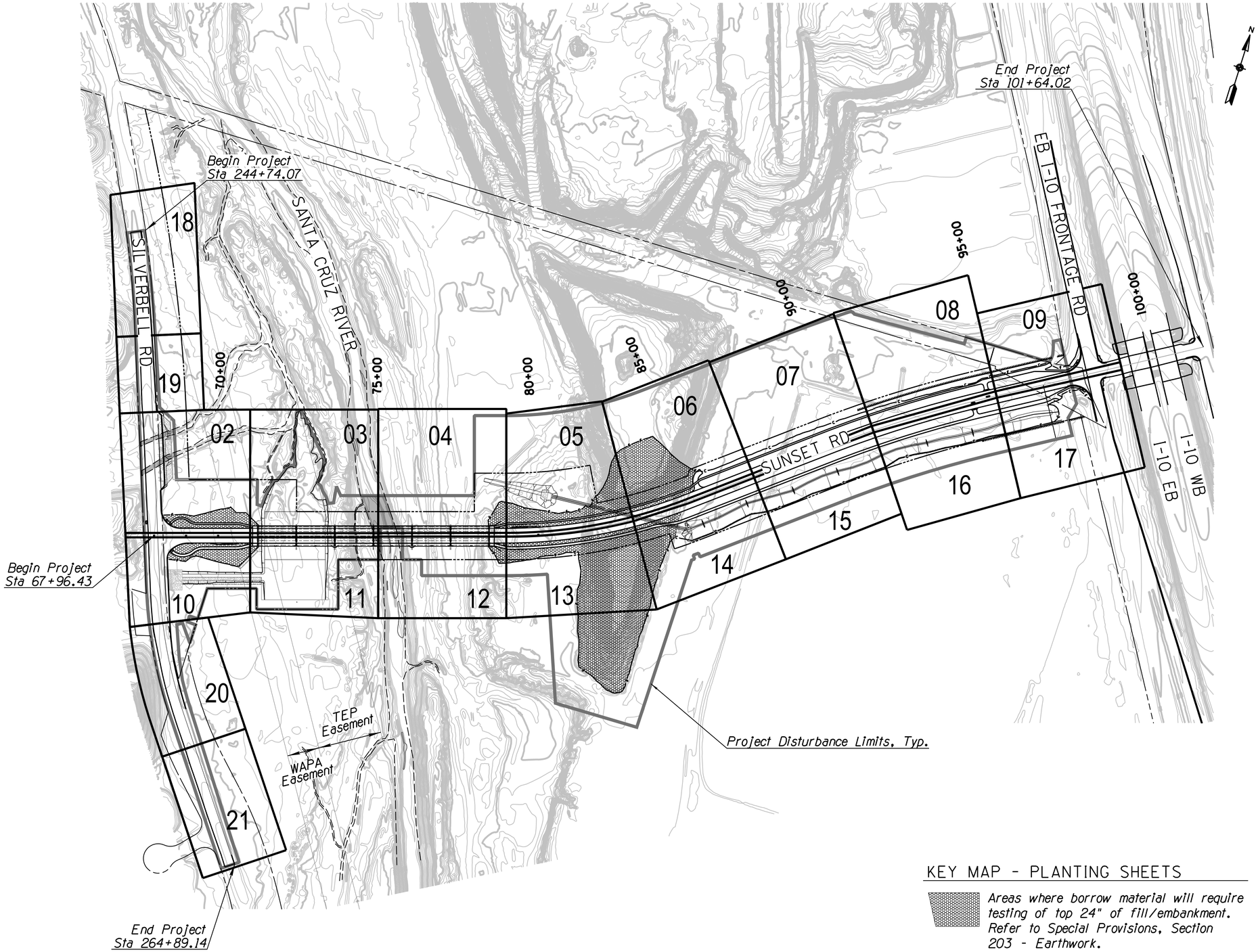

KEY MAP - PLANTING SHEETS

Areas where borrow material will require testing of top 24" of fill/embankment. Refer to Special Provisions, Section 203 - Earthwork.

80' 0' 80' 160'

Priscilla S. Cornelio, P.E., Director

No.	Revision Description	Engineer	Date

		Date
Designed	JP	11/15
Drawn	JP	11/15
Checked	LR	11/15
Proj. Engr.	JP	11/15

Pima County Department of Transportation

WHEAT DESIGN GROUP
LANDSCAPE ARCHITECTS

Arizona Blue Stake
1-800-STAKE-IT
1-800-782-5348

PLANTING PLAN
KEY MAP
SUNSET ROAD - SEGMENT 1
SILVERBELL RD. TO I-10
PROJECT NO. 4RTSUN

SUNSET ROAD - SILVERBELL ROAD TO I-10 - PROJECT NO. 4RTSUN

Scale:

Sheet L01 of L21

FILE NAME: M:\Sunset Rd-Sil to Riv-14902-Data\Sheet Files\4RTSUN_PL01.dgn DATE: 11/14/2015 TIME: 8:45:50 AM jpatton

MATCH LINE STA 250+40 SEE SHEET L19

Project Disturbance Limits, Typ.

Preservation Fencing
Refer to Detail 7/LD02 &
Preservation Fencing Plans

JD Limits, Typ.

Exist. R/W

WAPA Easement, Typ.

70+00

SILVERBELL RD.

Exist. Silverbell Rd. Const. ℄

Exist. R/W

Water Harvesting Basin
Typ. 3 EA, This Sheet
Refer to Detail 8/LD02

M-1 Mitigation Area
41 Trees, 62 Shrubs

New R/W

Clear Zone

Limit of RMS

Proposed TEP underground utility, 48" depth, typ. Refer to Utility Plans.

Sight Visibility Triangle

RMS, in combination with Seed Mix A, from back of sidewalk to top of retaining wall/base of fill slope

MATCH LINE STA 71+00
SEE SHEET L03

BEGIN PROJECT
SUNSET RD.
STA. 67+69.43

MATCH LINE STA 254+30
SEE SHEET L10

SUNSET RD.

Sunset Rd. Const. ℄

Clear Zone

N

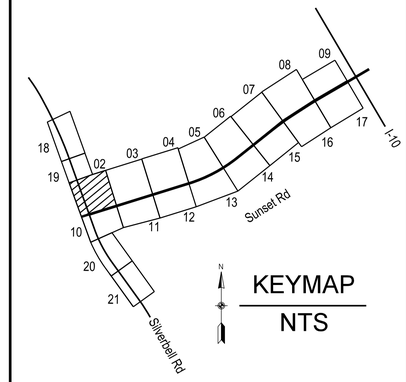

KEYMAP
NTS

TREES

Acacia constricta
Whitethorn Acacia

Acacia greggii
Catclaw Acacia

Celtis reticulata
Canyon Hackberry

Chilopsis linearis
Desert Willow

Prosopis pubescens
Screwbean Mesquite

Prosopis velutina
Velvet Mesquite

SHRUBS

Aloysia wrightii
Wright's beebrush

Anisacanthus thurberi
Desert Honeysuckle

Atriplex canescens
Four-wing Saltbush

Calliandra eriophylla
Native Fairy Duster

Celtis pallida
Desert Hackberry

Ericameria laricifolia
Turpentine Bush

Hyptis emoryi
Desert Lavender

Larrea tridentata
Creosote

Lycium fremontii
Wolfberry

Vauquelinia californica
Arizona Rosewood

Viguiera stenolaba
Goldeneye

Zizyphus obtusifolia
Graythorn

ACCENTS

Cylindropuntia leptocaulis
Christmas Cholla

Cylindropuntia spinosior
Cane Cholla

Dasylirion wheeleri
Desert Spoon

Ferocactus wislizenii
Fishhook Barrel

Fouquieria splendens
Ocotillo (Seed Grown)

Opuntia basilaris
Beavertail Prickly Pear

Opuntia engelmannii
Engleman's Prickly Pear

Opuntia violacea var. santa-rita
Purple Prickly Pear

Yucca baccata
Banana Yucca

Existing Vegetation to be Preserved in Place

Seed Mix A (Xeroriparian)

Seed Mix B (Riparian)

Seed Mix C (Low Growing)

RMS
Rock Mulch (Special) in Combination with Specified Seed Mix

Granite Mulch

M-#
Mitigation Area in Accordance with Riparian Habitat Mitigation Plans

Mitigation Area Limits

20 0 20 40'

Priscilla S. Cornelio, P.E., Director

Designed	JP	11/15
Drawn	JP	11/15
Checked	LR	11/15
Proj. Engr.	JP	11/15

No.	Revision Description	Engineer	Date

SUNSET ROAD – SILVERBELL ROAD TO I-10 – PROJECT NO. 4RTSUN

WHEAT DESIGN GROUP
LANDSCAPE ARCHITECTS

Arizona Blue Stake
1-800-STAKE-IT
1-800-782-5348
Call two working days before you dig

Pima County Department of Transportation

PLANTING PLAN
STA. 68+27 TO STA. 71+00
SUNSET ROAD - SEGMENT 1
SILVERBELL RD. TO I-10
PROJECT NO. 4RTSUN

Scale: 1"=20' | Sheet L02 of L21 | Page 151 of 203

FILE NAME: M:\Sunset Rd-Sil to Riv-14902-Data\Sheet Files\4RTSUN_PL02.dgn DATE: 11/14/2015 TIME: 8:45:59 AM jpatton

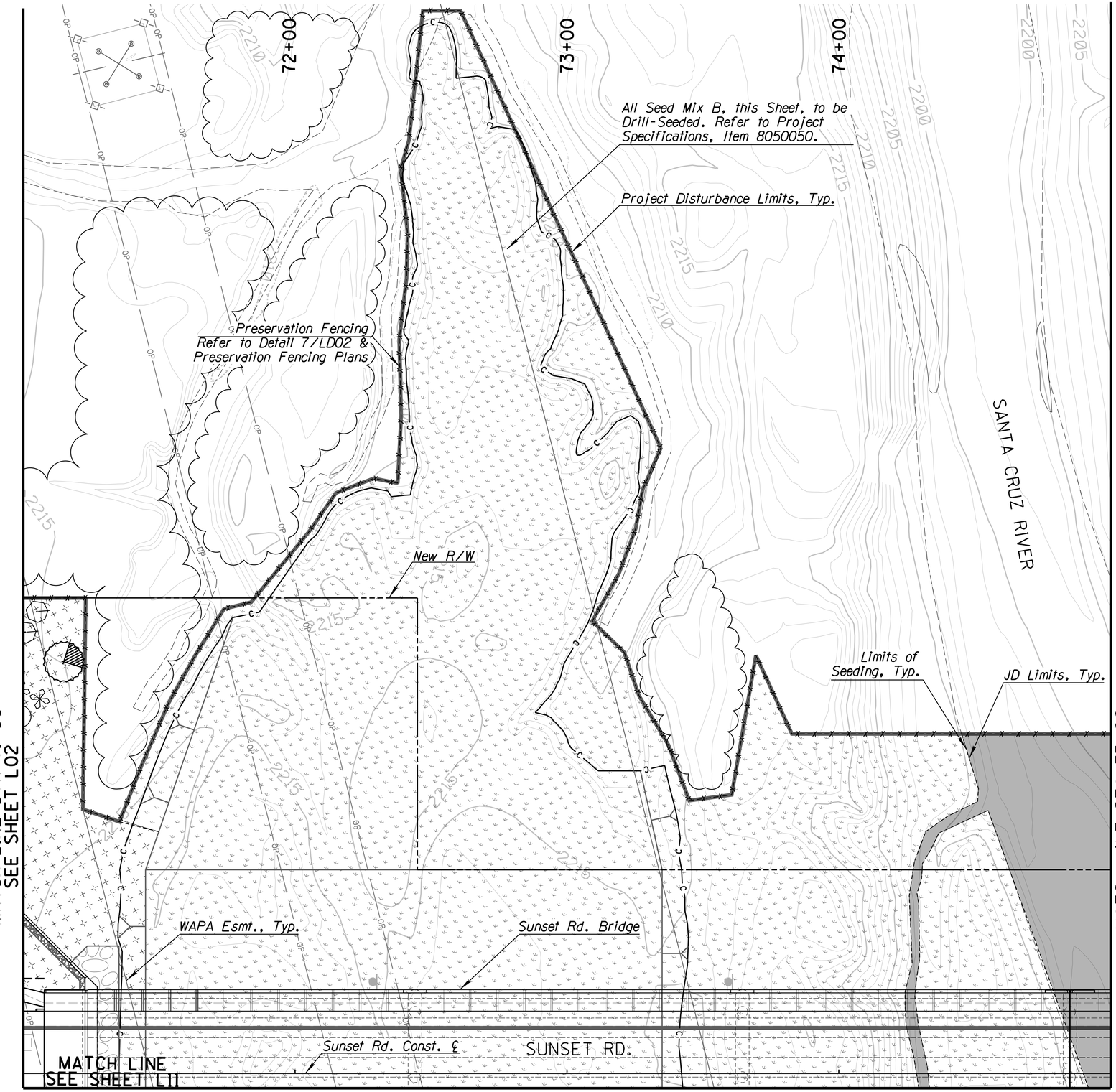

NOTE:
Seed Mix B Shall Extend Below Bridge Structure

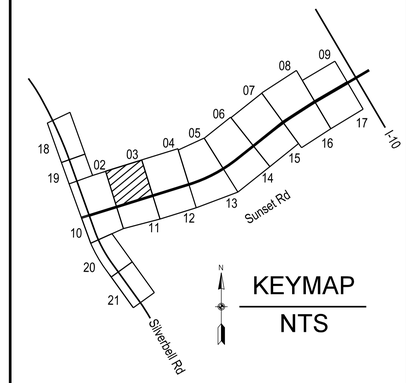

KEYMAP
NTS

TREES

Acacia constricta
Whitethorn Acacia

Acacia greggii
Catclaw Acacia

Celtis reticulata
Canyon Hackberry

Chilopsis linearis
Desert Willow

Prosopis pubescens
Screwbean Mesquite

Prosopis velutina
Velvet Mesquite

SHRUBS

Aloysia wrightii
Wright's beebrush

Anisacanthus thurberi
Desert Honeysuckle

Atriplex canescens
Four-wing Saltbush

Calliandra eriophylla
Native Fairy Duster

Celtis pallida
Desert Hackberry

Ericameria laricifolia
Turpentine Bush

Hyptis emoryi
Desert Lavender

Larrea tridentata
Creosote

Lycium fremontii
Wolfberry

Vauquelinia californica
Arizona Rosewood

Viguiera stenolaba
Goldeneye

Ziziphus obtusifolia
Graythorn

ACCENTS

Cylindropuntia leptocaulis
Christmas Cholla

Cylindropuntia spinosior
Cane Cholla

Dasylirion wheeleri
Desert Spoon

Ferocactus wislizenii
Fishhook Barrel

Fouquieria splendens
Ocotillo (Seed Grown)

Opuntia basilaris
Beavertail Prickly Pear

Opuntia engelmannii
Engleman's Prickly Pear

Opuntia violacea var. santa-rita
Purple Prickly Pear

Yucca baccata
Banana Yucca

Existing Vegetation to be Preserved in Place

Seed Mix A (Xeroriparian)

Seed Mix B (Riparian)

Seed Mix C (Low Growing)

RMS
Rock Mulch (Special) in Combination with Specified Seed Mix

Granite Mulch

M-#
Mitigation Area in Accordance with Riparian Habitat Mitigation Plans

Mitigation Area Limits

20 0 20 40'

Priscilla S. Cornelio, P.E., Director

No.	Revision Description	Engineer	Date

		Date
Designed	JP	11/15
Drawn	JP	11/15
Checked	LR	11/15
Proj. Engr.	JP	11/15

EXPIRES 6-30-2016

WHEAT DESIGN GROUP
LANDSCAPE ARCHITECTS

Arizona Blue Stake
1-800-STAKE-IT
1-800-782-5348
Call two working days before you dig

Pima County Department of Transportation

PLANTING PLAN
STA. 71+00 TO STA. 75+00
SUNSET ROAD - SEGMENT 1
SILVERBELL RD. TO I-10
PROJECT NO. 4RTSUN

SUNSET ROAD – SILVERBELL ROAD TO I-10 – PROJECT NO. 4RTSUN

Scale: 1"=20' | Sheet L03 of L21 | Page 152 of 203

FILE NAME: M:\Sunset Rd-Sil to Riv-14902-Data\Sheet Files\4RTSUN_PL03.dgn DATE: 11/14/2015 TIME: 8:46:03 AM jpatton

76+00

77+00

78+00

N

Seed Mix A, outside of ROW, this Sheet, to be Drill-Seeded. Refer to Project Specifications, Item 8050050.

Preservation Fencing
Refer to Detail 7/LD02 &
Preservation Fencing Plans

New R/W

M-4 Mitigation Area
64 Trees, 108 Shrubs

Water Harvesting Basin
Typ. 1 EA, This Sheet
Refer to Detail 8/LD02

Seed Mix B, this Sheet (excluding seeding within Mitigation Areas), to be Drill-Seeded. Refer to Project Specifications, Item 8050050.

JD Limits, Typ.

Project Disturbance Limits, Typ.

MATCH LINE STA 75+00
SEE SHEET L03

MATCH LINE STA 79+00
SEE SHEET L05

2200

2205

2225

RMS

RMS, in combination with Seed Mix A, from back of sidewalk to base of fill slope

Base of Fill Slope - Limit of RMS

Sunset Rd. Bridge

Clear Zone

Sunset Rd. Const. ℄

SUNSET RD.

MATCH LINE
SEE SHEET L12

NOTE:
Seed Mix B Shall Extend Below Bridge Structure

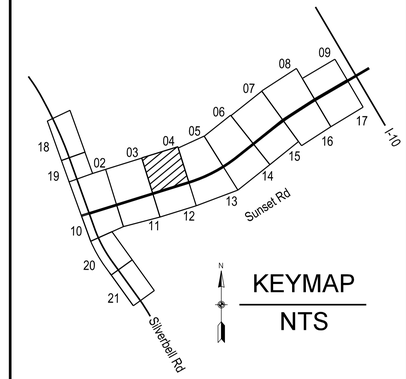

KEYMAP
NTS

TREES

Acacia constricta
Whitethorn Acacia

24
Chilopsis linearis
Desert Willow

Acacia greggii
Catclaw Acacia

Prosopis pubescens
Screwbean Mesquite

Celtis reticulata
Canyon Hackberry

36
Prosopis velutina
Velvet Mesquite

SHRUBS

Aloysia wrightii
Wright's beebrush

Anisacanthus thurberi
Desert Honeysuckle

Atriplex canescens
Four-wing Saltbush

Calliandra eriophylla
Native Fairy Duster

Celtis pallida
Desert Hackberry

Ericameria laricifolia
Turpentine Bush

Hyptis emoryi
Desert Lavender

Larrea tridentata
Creosote

Lycium fremontii
Wolfberry

Vauquelinia californica
Arizona Rosewood

Viguiera stenolaba
Goldeneye

Zizyphus obtusifolia
Graythorn

ACCENTS

Cylindropuntia leptocaulis
Christmas Cholla

Cylindropuntia spinosior
Cane Cholla

Dasylirion wheeleri
Desert Spoon

Ferocactus wislizenii
Fishhook Barrel

Fouquieria splendens
Ocotillo (Seed Grown)

Opuntia basilaris
Beavertail Prickly Pear

Opuntia engelmannii
Engleman's Prickly Pear

Opuntia violacea var. santa-rita
Purple Prickly Pear

Yucca baccata
Banana Yucca

Existing Vegetation to be Preserved in Place

Seed Mix A (Xeroriparian)

Seed Mix B (Riparian)

Seed Mix C (Low Growing)

RMS
Rock Mulch (Special) in Combination with Specified Seed Mix

Granite Mulch

M-#
Mitigation Area in Accordance with Riparian Habitat Mitigation Plans

Mitigation Area Limits

Priscilla S. Cornelio, P.E., Director

		Date
Designed	JP	11/15
Drawn	JP	11/15
Checked	LR	11/15
Proj. Engr.	JP	11/15

No.	Revision Description	Engineer	Date

WHEAT DESIGN GROUP
LANDSCAPE ARCHITECTS

Arizona Blue Stake
1-800-STAKE-IT
1-800-782-5348

Pima County Department of Transportation

PLANTING PLAN
STA. 75+00 TO STA. 79+00
SUNSET ROAD - SEGMENT 1
SILVERBELL RD. TO I-10
PROJECT NO. 4RTSUN

SUNSET ROAD - SILVERBELL ROAD TO I-10 - PROJECT NO. 4RTSUN

Scale: 1" = 20' | Sheet L04 of L21 | Page 153 of 203

FILE NAME: M:\Sunset Rd-Sil to Riv-14902-Data\Sheet Files\4RTSUN_PL04.dgn DATE: 11/14/2015 TIME: 8:46:07 AM jpatton

Project Disturbance Limits, Typ.

Preservation Fencing
Refer to Detail 7/LD02 &
Preservation Fencing Plans

Seed Mix A, outside of ROW, this Sheet, to be Drill-Seeded. Refer to Project Specifications, Item 8050050.

80+00

81+00

82+00

New R/W

M-4 Mitigation Area
64 Trees, 108 Shrubs

Water Harvesting Basin
Typ. 1 EA, This Sheet
Refer to Detail 8/LD02

MATCH LINE STA 79+00
SEE SHEET L04

MATCH LINE STA 83+00
SEE SHEET L06

Base of Fill Slope - Limit of RMS

Northern limit of RMS

RMS, in combination with Seed Mix A, from back of sidewalk to ROW/base of fill slope

Proposed TEP underground utility, 48" depth, typ. Refer to Utility Plans.

Clear Zone

SUNSET RD.

Sunset Rd. Const. ℄

MATCH LINE - SEE SHEET L13

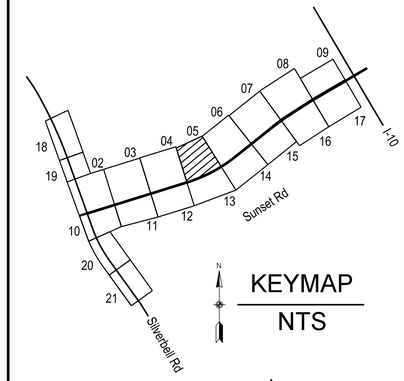

KEYMAP
NTS

TREES

Acacia constricta
Whitethorn Acacia

Acacia greggii
Catclaw Acacia

Celtis reticulata
Canyon Hackberry

Chilopsis linearis
Desert Willow

Prosopis pubescens
Screwbean Mesquite

Prosopis velutina
Velvet Mesquite

SHRUBS

Aloysia wrightii
Wright's beebrush

Anisacanthus thurberi
Desert Honeysuckle

Atriplex canescens
Four-wing Saltbush

Calliandra erlophylla
Native Fairy Duster

Celtis pallida
Desert Hackberry

Ericameria laricifolia
Turpentine Bush

Hyptis emoryi
Desert Lavender

Larrea tridentata
Creosote

Lycium fremontii
Wolfberry

Vauquelinia californica
Arizona Rosewood

Viguiera stenolaba
Goldeneye

Zizyphus obtusifolia
Graythorn

ACCENTS

Cylindropuntia leptocaulis
Christmas Cholla

Cylindropuntia spinosior
Cane Cholla

Dasylirion wheeleri
Desert Spoon

Ferocactus wislizenii
Fishhook Barrel

Fouquieria splendens
Ocotillo (Seed Grown)

Opuntia basilaris
Beavertail Prickly Pear

Opuntia engelmannii
Engleman's Prickly Pear

Opuntia violacea var. santa-rita
Purple Prickly Pear

Yucca baccata
Banana Yucca

Existing Vegetation to be Preserved in Place

Seed Mix A (Xeroriparian)

Seed Mix B (Riparian)

Seed Mix C (Low Growing)

RMS
Rock Mulch (Special) in Combination with Specified Seed Mix

Granite Mulch

M-#
Mitigation Area in Accordance with Riparian Habitat Mitigation Plans

Mitigation Area Limits

20 0 20 40'

Priscilla S. Cornelio, P.E., Director

Designed	JP	11/15
Drawn	JP	11/15
Checked	LR	11/15
Proj. Engr.	JP	11/15

No.	Revision Description	Engineer	Date

WHEAT DESIGN GROUP
LANDSCAPE ARCHITECTS

Arizona Blue Stake
1-800-STAKE-IT
1-800-782-5348

Pima County Department of Transportation

PLANTING PLAN
STA. 79+00 TO STA. 83+00
SUNSET ROAD - SEGMENT I
SILVERBELL RD. TO I-10
PROJECT NO. 4RTSUN

SUNSET ROAD - SILVERBELL ROAD TO I-10 - PROJECT NO. 4RTSUN

Scale: 1"=20' | Sheet L05 of L21 | Page 154 of 203

FILE NAME: M:\Sunset Rd-Sil to Riv-14902-Data\Sheet Files\4RTSUN_PL05.dgn DATE: 11/14/2015 TIME: 8:46:12 AM jpatton

Seed Mix A, outside of ROW, this Sheet, to be Drill-Seeded. Refer to Project Specifications, Item 8050050.

Project Disturbance Limits, Typ.

84+00

85+00

86+00

Proposed TEP underground utility, 48" depth, typ. Refer to Utility Plans.

Limit of RMS

RMS, in combination with Seed Mix A, from back of sidewalk to Access Road

Limit of RMS

New R/W

RMS

MATCH LINE STA 83+00
SEE SHEET L05

MATCH LINE STA 87+00
SEE SHEET L07

SUNSET RD.

MATCHLINE
SEE SHEET L14

Clear Zone

Sunset Rd. Const. ℄

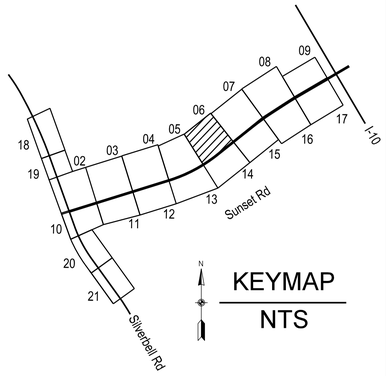

TREES

Acacia constricta
Whitethorn Acacia

Chilopsis linearis
Desert Willow

Acacia greggii
Catclaw Acacia

Prosopis pubescens
Screwbean Mesquite

Celtis reticulata
Canyon Hackberry

Prosopis velutina
Velvet Mesquite

SHRUBS

Aloysia wrightii
Wright's beebrush

Anisacanthus thurberi
Desert Honeysuckle

Atriplex canescens
Four-wing Saltbush

Calliandra eriophylla
Native Fairy Duster

Celtis pallida
Desert Hackberry

Ericameria laricifolia
Turpentine Bush

Hyptis emoryi
Desert Lavender

Larrea tridentata
Creosote

Lycium fremontii
Wolfberry

Vauquelinia californica
Arizona Rosewood

Viguiera stenolaba
Goldeneye

Zizyphus obtusifolia
Graythorn

ACCENTS

Cylindropuntia leptocaulis
Christmas Cholla

Cylindropuntia spinosior
Cane Cholla

Dasylirion wheeleri
Desert Spoon

Ferocactus wislizenii
Fishhook Barrel

Fouquieria splendens
Ocotillo (Seed Grown)

Opuntia basilaris
Beavertail Prickly Pear

Opuntia engelmannii
Engleman's Prickly Pear

Opuntia violacea var. santa-rita
Purple Prickly Pear

Yucca baccata
Banana Yucca

Existing Vegetation to be Preserved in Place

Seed Mix A (Xeroriparian)

Seed Mix B (Riparian)

Seed Mix C (Low Growing)

RMS
Rock Mulch (Special) in Combination with Specified Seed Mix

Granite Mulch

M-#
Mitigation Area in Accordance with Riparian Habitat Mitigation Plans

Mitigation Area Limits

20 0 20 40'

Scale: 1"=20'

Sheet L06 of L21

Pima County Department of Transportation

Priscilla S. Cornelio, P.E., Director

Designed	JP	11/15
Drawn	JP	11/15
Checked	LR	11/15
Proj. Engr.	JP	11/15

No.	Revision Description	Engineer	Date

WHEAT DESIGN GROUP
LANDSCAPE ARCHITECTS

Arizona Blue Stake
1-800-STAKE-IT
1-800-782-5348

PLANTING PLAN
STA. 83+00 TO STA. 87+00
SUNSET ROAD - SEGMENT 1
SILVERBELL RD. TO I-10
PROJECT NO. 4RTSUN

SUNSET ROAD – SILVERBELL ROAD TO I-10 – PROJECT NO. 4RTSUN

FILE NAME: M:\Sunset Rd-Sil to Riv-14902-Data\Sheet Files\4RTSUN_PL06.dgn DATE: 11/14/2015 TIME: 8:46:16 AM jpetton

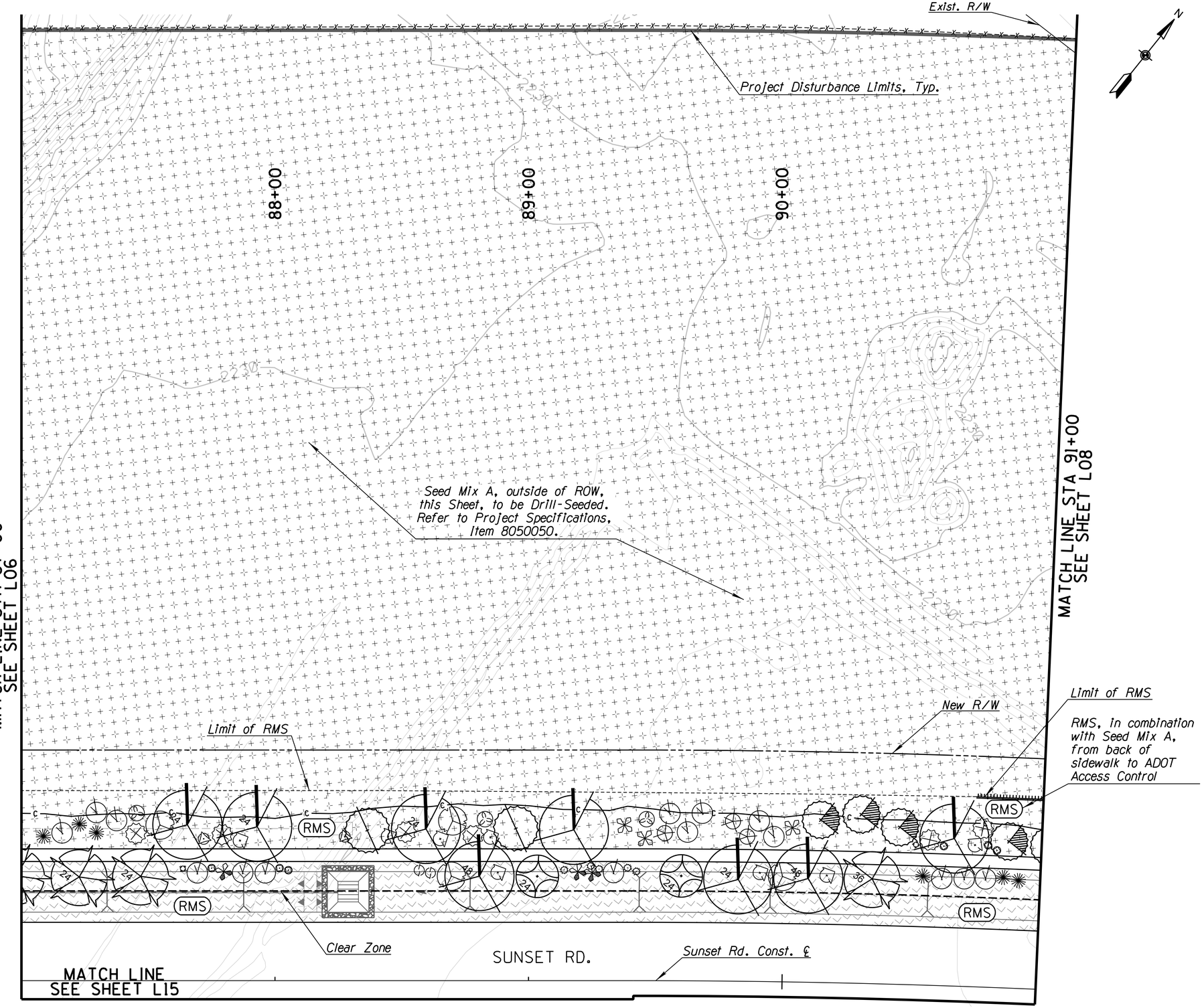

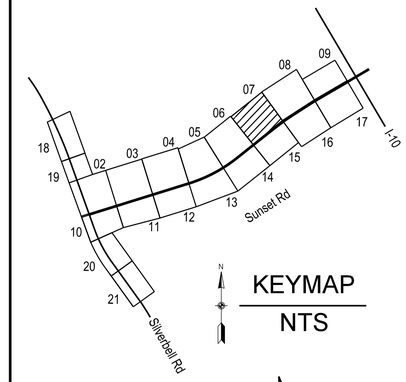

TREES

Acacia constricta Whitethorn Acacia — 24

Chilopsis linearis Desert Willow

Acacia greggii Catclaw Acacia

Prosopis pubescens Screwbean Mesquite

Celtis reticulata Canyon Hackberry — 36

Prosopis velutina Velvet Mesquite

SHRUBS

Aloysia wrightii Wright's beebrush

Anisacanthus thurberi Desert Honeysuckle

Atriplex canescens Four-wing Saltbush

Calliandra eriophylla Native Fairy Duster

Celtis pallida Desert Hackberry

Ericameria laricifolia Turpentine Bush

Hyptis emoryi Desert Lavender

Larrea tridentata Creosote

Lycium fremontii Wolfberry

Vauquelinia californica Arizona Rosewood

Viguiera stenolaba Goldeneye

Zizyphus obtusifolia Graythorn

ACCENTS

Cylindropuntia leptocaulis Christmas Cholla

Cylindropuntia spinosior Cane Cholla

Dasylirion wheeleri Desert Spoon

Ferocactus wislizenii Fishhook Barrel

Fouquieria splendens Ocotillo (Seed Grown)

Opuntia basilaris Beavertail Prickly Pear

Opuntia engelmannii Engleman's Prickly Pear

Opuntia violacea var. santa-rita Purple Prickly Pear

Yucca baccata Banana Yucca

Existing Vegetation to be Preserved in Place

Seed Mix A (Xeroriparian)

Seed Mix B (Riparian)

Seed Mix C (Low Growing)

RMS — Rock Mulch (Special) in Combination with Specified Seed Mix

Granite Mulch

M-# — Mitigation Area in Accordance with Riparian Habitat Mitigation Plans

Mitigation Area Limits

20 0 20 40'

Priscilla S. Cornelio, P.E., Director

Designed	JP	11/15
Drawn	JP	11/15
Checked	LR	11/15
Proj. Engr.	JP	11/15

No.	Revision Description	Engineer	Date

REGISTERED LANDSCAPE ARCHITECT — STATE OF ARIZONA — JOHN WILLIAM PETTON — CERTIFICATE NO. 36215 — EXPIRES 6-30-2016

WHEAT DESIGN GROUP — LANDSCAPE ARCHITECTS

Arizona Blue Stake — 1-800-STAKE-IT (1-800-782-5348) — Call two working days before you dig

Pima County Department of Transportation

PLANTING PLAN
STA. 87+00 TO STA. 91+00
SUNSET ROAD - SEGMENT 1
SILVERBELL RD. TO I-10
PROJECT NO. 4RTSUN

SUNSET ROAD – SILVERBELL ROAD TO I-10 – PROJECT NO. 4RTSUN

Scale: 1"=20' | Sheet L07 of L21 | Page 156 of 203

FILE NAME: M:\Sunset Rd-Sil to Riv-14902-Data\Sheet Files\4RTSUN_PL07.dgn DATE: 11/14/2015 TIME: 8:46:20 AM jpetton

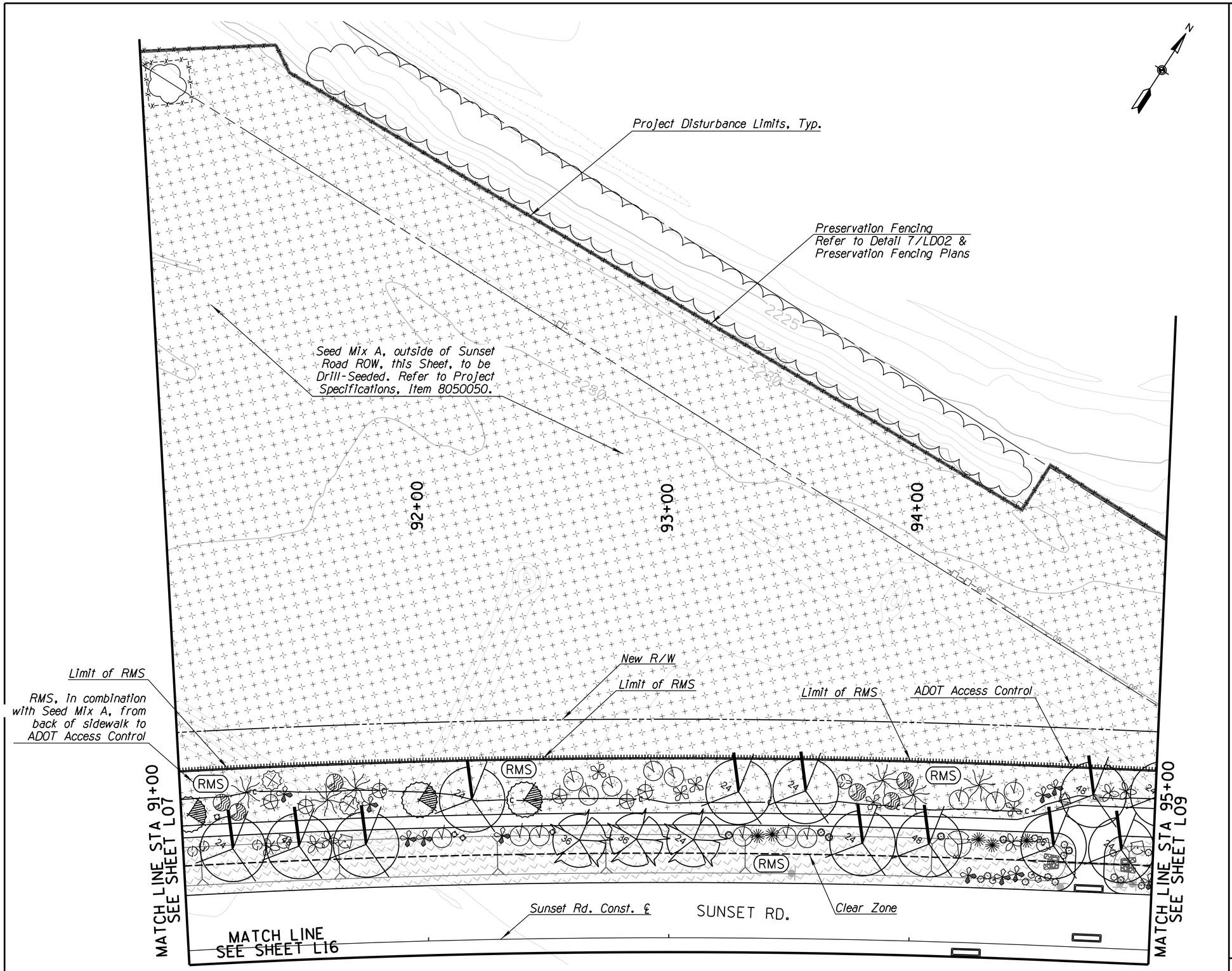

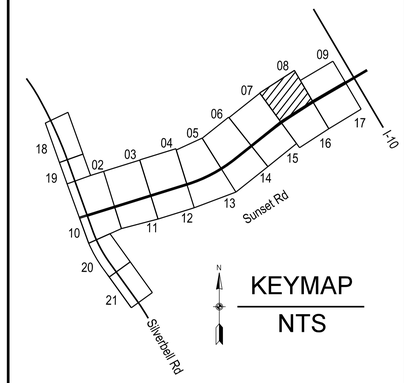

KEYMAP
NTS

TREES

- *Acacia constricta* — Whitethorn Acacia (24)
- *Acacia greggii* — Catclaw Acacia
- *Celtis reticulata* — Canyon Hackberry (36)
- *Chilopsis linearis* — Desert Willow
- *Prosopis pubescens* — Screwbean Mesquite
- *Prosopis velutina* — Velvet Mesquite

SHRUBS

- *Aloysia wrightii* — Wright's beebrush
- *Anisacanthus thurberi* — Desert Honeysuckle
- *Atriplex canescens* — Four-wing Saltbush
- *Calliandra eriophylla* — Native Fairy Duster
- *Celtis pallida* — Desert Hackberry
- *Ericameria laricifolia* — Turpentine Bush
- *Hyptis emoryi* — Desert Lavender
- *Larrea tridentata* — Creosote
- *Lycium fremontii* — Wolfberry
- *Vauquelinia californica* — Arizona Rosewood
- *Viguiera stenolaba* — Goldeneye
- *Zizyphus obtusifolia* — Graythorn

ACCENTS

- *Cylindropuntia leptocaulis* — Christmas Cholla
- *Cylindropuntia spinosior* — Cane Cholla
- *Dasylirion wheeleri* — Desert Spoon
- *Ferocactus wislizenii* — Fishhook Barrel
- *Fouquieria splendens* — Ocotillo (Seed Grown)
- *Opuntia basilaris* — Beavertail Prickly Pear
- *Opuntia engelmannii* — Engleman's Prickly Pear
- *Opuntia violacea var. santa-rita* — Purple Prickly Pear
- *Yucca baccata* — Banana Yucca

Existing Vegetation to be Preserved in Place

Seed Mix A (Xeroriparian)

Seed Mix B (Riparian)

Seed Mix C (Low Growing)

RMS — Rock Mulch (Special) in Combination with Specified Seed Mix

Granite Mulch

M-# — Mitigation Area in Accordance with Riparian Habitat Mitigation Plans

Mitigation Area Limits

20 0 20 40'

Priscilla S. Cornelio, P.E., Director

Designed	JP	11/15
Drawn	JP	11/15
Checked	LR	11/15
Proj. Engr.	JP	11/15

No.	Revision Description	Engineer	Date

WHEAT DESIGN GROUP
LANDSCAPE ARCHITECTS

Arizona Blue Stake
1-800-STAKE-IT
1-800-782-5348

Pima County Department of Transportation

PLANTING PLAN
STA. 91+00 TO STA. 95+00
SUNSET ROAD - SEGMENT I
SILVERBELL RD. TO I-10
PROJECT NO. 4RTSUN

SUNSET ROAD – SILVERBELL ROAD TO I-10 – PROJECT NO. 4RTSUN

Scale: 1"=20' | Sheet L08 of L21 | Page 157 of 203

FILE NAME: M:\Sunset Rd-Sil to Riv-14902-Data\Sheet Files\4RTSUN_PL08.dgn DATE: 11/14/2015 TIME: 8:46:25 AM jpatton

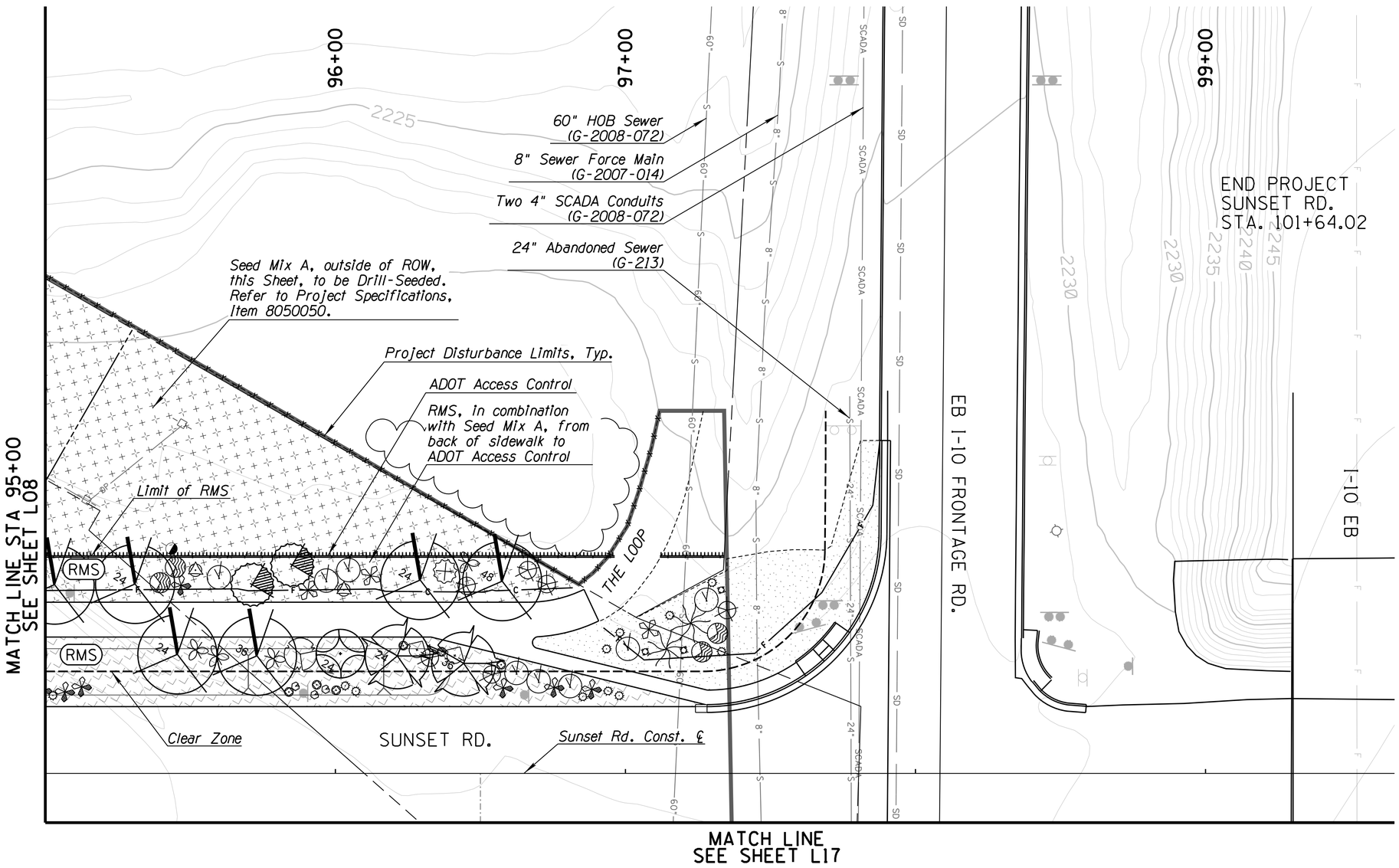

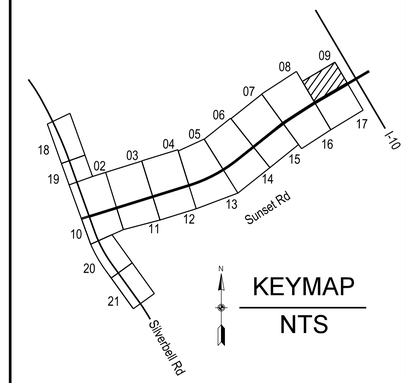

TREES

- *Acacia constricta* — Whitethorn Acacia
- *Acacia greggii* — Catclaw Acacia
- *Celtis reticulata* — Canyon Hackberry
- *Chilopsis linearis* — Desert Willow (24)
- *Prosopis pubescens* — Screwbean Mesquite
- *Prosopis velutina* — Velvet Mesquite (36)

SHRUBS

- *Aloysia wrightii* — Wright's beebrush
- *Anisacanthus thurberi* — Desert Honeysuckle
- *Atriplex canescens* — Four-wing Saltbush
- *Calliandra eriophylla* — Native Fairy Duster
- *Celtis pallida* — Desert Hackberry
- *Ericameria laricifolia* — Turpentine Bush
- *Hyptis emoryi* — Desert Lavender
- *Larrea tridentata* — Creosote
- *Lycium fremontii* — Wolfberry
- *Vauquelinia californica* — Arizona Rosewood
- *Viguiera stenolaba* — Goldeneye
- *Zizyphus obtusifolia* — Graythorn

ACCENTS

- *Cylindropuntia leptocaulis* — Christmas Cholla
- *Cylindropuntia spinosior* — Cane Cholla
- *Dasylirion wheeleri* — Desert Spoon
- *Ferocactus wislizenii* — Fishhook Barrel
- *Fouquieria splendens* — Ocotillo (Seed Grown)
- *Opuntia basilaris* — Beavertail Prickly Pear
- *Opuntia engelmannii* — Engleman's Prickly Pear
- *Opuntia violacea var. santa-rita* — Purple Prickly Pear
- *Yucca baccata* — Banana Yucca

Existing Vegetation to be Preserved in Place

Seed Mix A (Xeroriparian)

Seed Mix B (Riparian)

Seed Mix C (Low Growing)

RMS — Rock Mulch (Special) in Combination with Specified Seed Mix

Granite Mulch

M-# — Mitigation Area in Accordance with Riparian Habitat Mitigation Plans

Mitigation Area Limits

20 0 20 40'

Priscilla S. Cornelio, P.E., Director

Designed	JP	
Drawn	JP	
Checked	LR	
Proj. Engr.	JP	

No.	Revision Description	Engineer	Date

		Date
		11/15
		11/15
		11/15
		11/15

WHEAT DESIGN GROUP
LANDSCAPE ARCHITECTS

Arizona Blue Stake
1-800-STAKE-IT
1-800-782-5348

Pima County Department of Transportation

PLANTING PLAN
STA. 95+00 TO STA. 99+00
SUNSET ROAD - SEGMENT 1
SILVERBELL RD. TO I-10
PROJECT NO. 4RTSUN

SUNSET ROAD – SILVERBELL ROAD TO I-10 – PROJECT NO. 4RTSUN

Scale: 1" = 20' | Sheet L09 of L21 | Page 158 of 203

FILE NAME: M:\Sunset Rd-Sil to Riv-14902-Data\Sheet Files\4RTSUN_PL09.dgn DATE: 11/14/2015 TIME: 8:46:29 AM jpatton

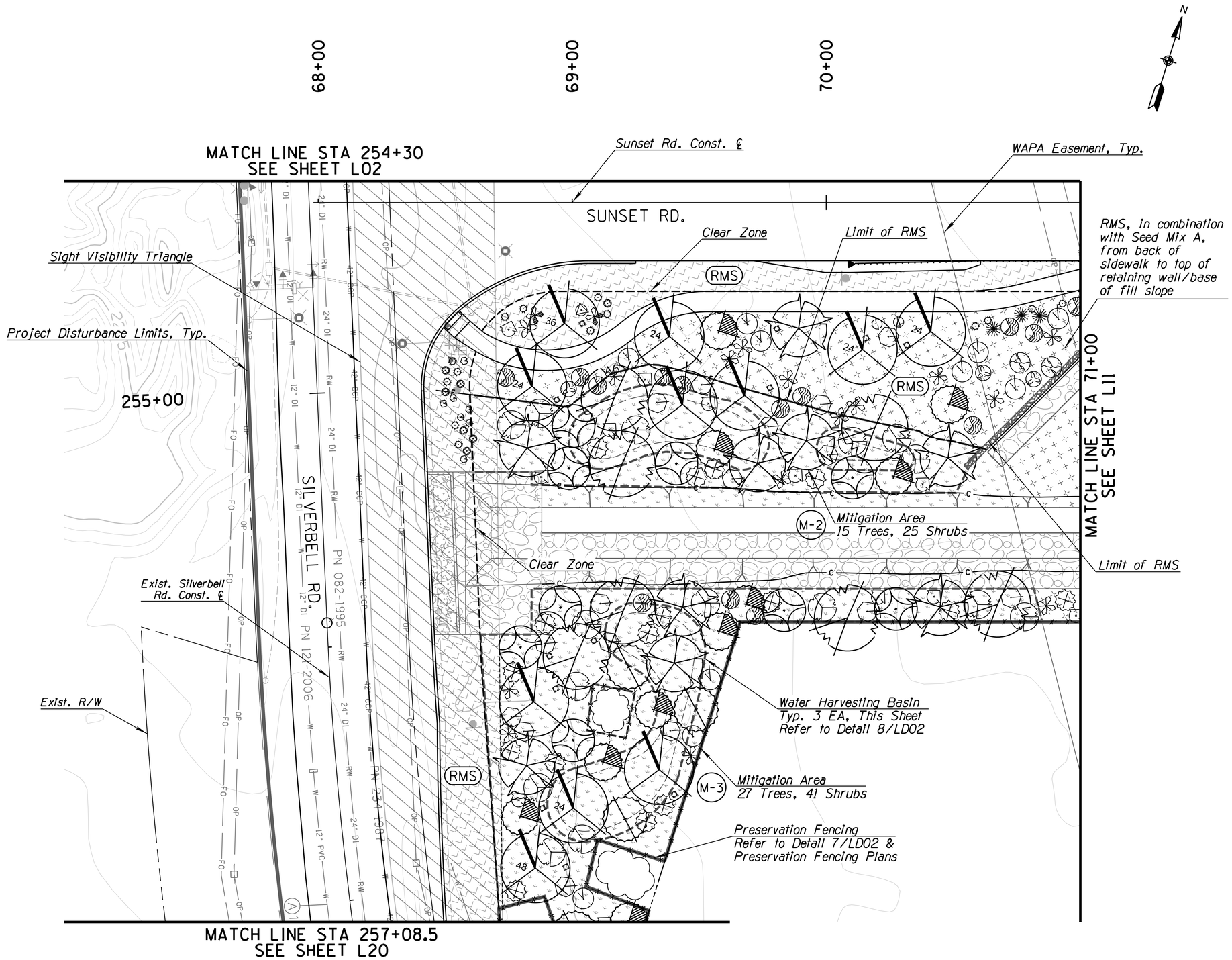

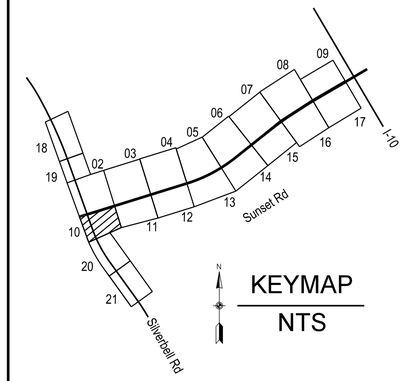

TREES

- *Acacia constricta* — Whitethorn Acacia
- *Acacia greggii* — Catclaw Acacia
- *Celtis reticulata* — Canyon Hackberry
- *Chilopsis linearis* — Desert Willow
- *Prosopis pubescens* — Screwbean Mesquite
- *Prosopis velutina* — Velvet Mesquite

SHRUBS

- *Aloysia wrightii* — Wright's beebrush
- *Anisacanthus thurberi* — Desert Honeysuckle
- *Atriplex canescens* — Four-wing Saltbush
- *Callilandra eriophylla* — Native Fairy Duster
- *Celtis pallida* — Desert Hackberry
- *Ericameria laricifolia* — Turpentine Bush
- *Hyptis emoryi* — Desert Lavender
- *Larrea tridentata* — Creosote
- *Lycium fremontii* — Wolfberry
- *Vauquelinia californica* — Arizona Rosewood
- *Viguiera stenolaba* — Goldeneye
- *Zizyphus obtusifolia* — Graythorn

ACCENTS

- *Cylindropuntia leptocaulis* — Christmas Cholla
- *Cylindropuntia spinosior* — Cane Cholla
- *Dasylirion wheeleri* — Desert Spoon
- *Ferocactus wislizenii* — Fishhook Barrel
- *Fouquieria splendens* — Ocotillo (Seed Grown)
- *Opuntia basilaris* — Beavertail Prickly Pear
- *Opuntia engelmannii* — Engleman's Prickly Pear
- *Opuntia violacea var. santa-rita* — Purple Prickly Pear
- *Yucca baccata* — Banana Yucca

Existing Vegetation to be Preserved in Place

Seed Mix A (Xeroriparian)

Seed Mix B (Riparian)

Seed Mix C (Low Growing)

RMS — Rock Mulch (Special) in Combination with Specified Seed Mix

Granite Mulch

M-# — Mitigation Area in Accordance with Riparian Habitat Mitigation Plans

Mitigation Area Limits

20 0 20 40'

Priscilla S. Cornelio, P.E., Director

		Date
Designed	JP	11/15
Drawn	JP	11/15
Checked	LR	11/15
Proj. Engr.	JP	11/15

No.	Revision Description	Engineer	Date

WHEAT DESIGN GROUP
LANDSCAPE ARCHITECTS

Arizona Blue Stake
1-800-STAKE-IT
1-800-782-5348

Pima County Department of Transportation

PLANTING PLAN
STA. 68+27 TO STA. 71+00
SUNSET ROAD - SEGMENT 1
SILVERBELL RD. TO I-10
PROJECT NO. 4RTSUN

SUNSET ROAD – SILVERBELL ROAD TO I-10 – PROJECT NO. 4RTSUN

Scale: 1"=20' | Sheet L10 of L21 | Page 159 of 203

FILE NAME: M:\Sunset Rd-Sil to Riv-14902-Data\Sheet Files\4RTSUN_PL10.dgn DATE: 11/14/2015 TIME: 8:46:33 AM jpatton

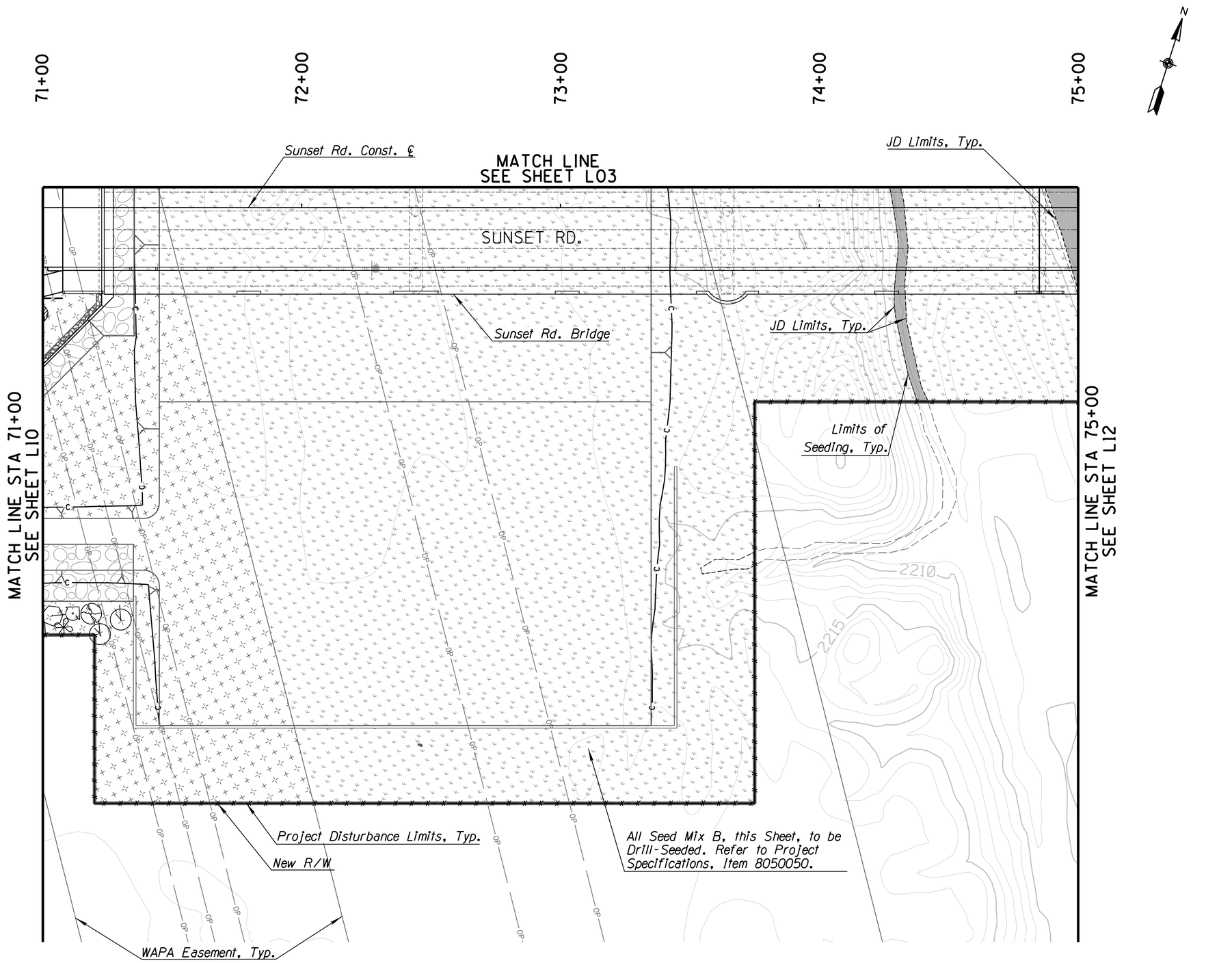

NOTE:
Seed Mix B Shall
Extend Below Bridge
Structure

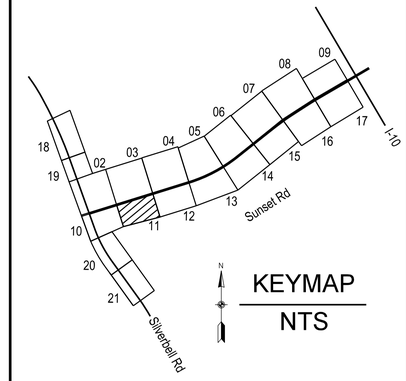

KEYMAP
NTS

TREES

Acacia constricta
Whitethorn Acacia

Acacia greggii
Catclaw Acacia

Celtis reticulata
Canyon Hackberry

24
Chilopsis linearis
Desert Willow

Prosopis pubescens
Screwbean Mesquite

36
Prosopis velutina
Velvet Mesquite

SHRUBS

Aloysia wrightii
Wright's beebrush

Anisacanthus thurberi
Desert Honeysuckle

Atriplex canescens
Four-wing Saltbush

Calliandra eriophylla
Native Fairy Duster

Celtis pallida
Desert Hackberry

Ericameria laricifolia
Turpentine Bush

Hyptis emoryi
Desert Lavender

Larrea tridentata
Creosote

Lycium fremontii
Wolfberry

Vauquelinia californica
Arizona Rosewood

Viguiera stenolaba
Goldeneye

Zizyphus obtusifolia
Graythorn

ACCENTS

Cylindropuntia leptocaulis
Christmas Cholla

Cylindropuntia spinosior
Cane Cholla

Dasylirion wheeleri
Desert Spoon

Ferocactus wislizenii
Fishhook Barrel

Fouquieria splendens
Ocotillo (Seed Grown)

Opuntia basilaris
Beavertail Prickly Pear

Opuntia engelmannii
Engleman's Prickly Pear

Opuntia violacea var. santa-rita
Purple Prickly Pear

Yucca baccata
Banana Yucca

Existing Vegetation
to be Preserved in Place

Seed Mix A
(Xeroriparian)

Seed Mix B
(Riparian)

Seed Mix C
(Low Growing)

RMS
Rock Mulch (Special)
in Combination with
Specified Seed Mix

Granite Mulch

M-#
Mitigation Area
in Accordance
with Riparian
Habitat
Mitigation Plans

Mitigation Area
Limits

20 0 20 40'

Priscilla S. Cornelio, P.E., Director

		Date
Designed	JP	11/15
Drawn	JP	11/15
Checked	LR	11/15
Proj. Engr.	JP	11/15

No.	Revision Description	Engineer	Date

REGISTERED PROFESSIONAL ENGINEER (CIVIL) JAMES PATTON NO. 36881 ARIZONA U.S.A. EXPIRES 6-30-2016

WHEAT DESIGN GROUP
LANDSCAPE ARCHITECTS

Arizona Blue Stake
1-800-STAKE-IT
1-800-782-5348
Call two working days before you dig

Pima County Department of Transportation

PLANTING PLAN
STA. 71+00 TO STA. 75+00
SUNSET ROAD - SEGMENT I
SILVERBELL RD. TO I-10
PROJECT NO. 4RTSUN

SUNSET ROAD – SILVERBELL ROAD TO I-10 – PROJECT NO. 4RTSUN

Scale:	1"=20'	Sheet L11 of L21	Page 160 of 203

FILE NAME: M:\Sunset Rd-Sil to Riv-14902-Data\Sheet Files\4RTSUN_PL11.dgn DATE: 11/14/2015 TIME: 8:46:37 AM jpatton

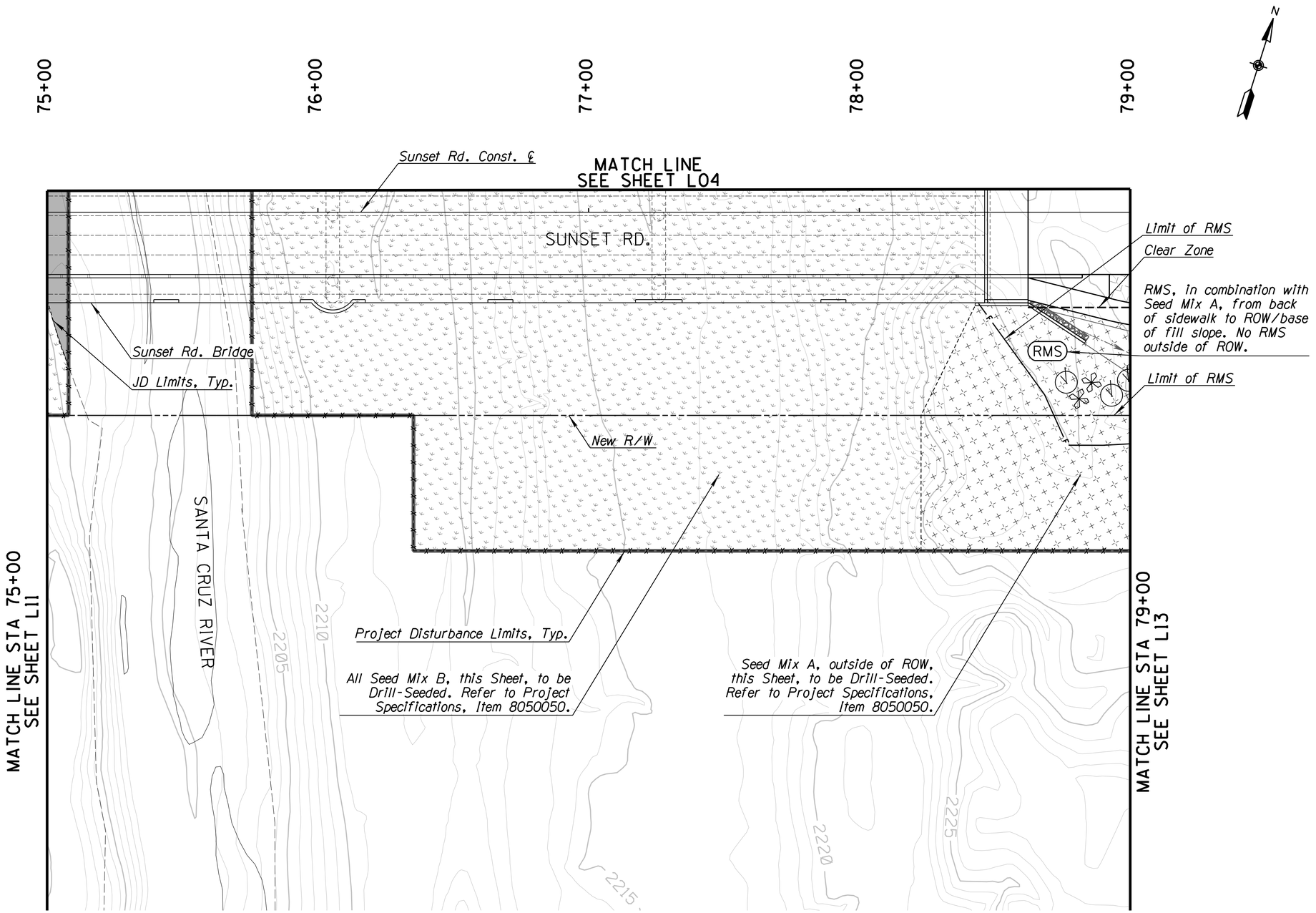

NOTE:
Seed Mix B Shall Extend Below Bridge Structure

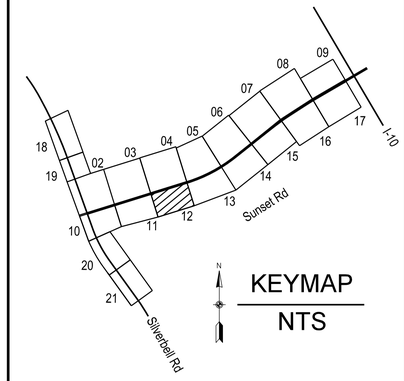

KEYMAP
NTS

TREES

Acacia constricta
Whitethorn Acacia

24
Chilopsis linearis
Desert Willow

Acacia greggii
Catclaw Acacia

Prosopis pubescens
Screwbean Mesquite

Celtis reticulata
Canyon Hackberry

36
Prosopis velutina
Velvet Mesquite

SHRUBS

Aloysia wrightii
Wright's beebrush

Anisacanthus thurberi
Desert Honeysuckle

Atriplex canescens
Four-wing Saltbush

Calliandra eriophylla
Native Fairy Duster

Celtis pallida
Desert Hackberry

Ericameria laricifolia
Turpentine Bush

Hyptis emoryi
Desert Lavender

Larrea tridentata
Creosote

Lycium fremontii
Wolfberry

Vauquelinia californica
Arizona Rosewood

Viguiera stenolaba
Goldeneye

Zizyphus obtusifolia
Graythorn

ACCENTS

Cylindropuntia leptocaulis
Christmas Cholla

Cylindropuntia spinosior
Cane Cholla

Dasylirion wheeleri
Desert Spoon

Ferocactus wislizenii
Fishhook Barrel

Fouquieria splendens
Ocotillo (Seed Grown)

Opuntia basilaris
Beavertail Prickly Pear

Opuntia engelmannii
Engleman's Prickly Pear

Opuntia violacea var. santa-rita
Purple Prickly Pear

Yucca baccata
Banana Yucca

Existing Vegetation to be Preserved in Place

Seed Mix A (Xeroriparian)

Seed Mix B (Riparian)

Seed Mix C (Low Growing)

RMS
Rock Mulch (Special) in Combination with Specified Seed Mix

Granite Mulch

M-#
Mitigation Area in Accordance with Riparian Habitat Mitigation Plans

Mitigation Area Limits

20 0 20 40'

Priscilla S. Cornelio, P.E., Director

Designed	JP	11/15
Drawn	JP	11/15
Checked	LR	11/15
Proj. Engr.	JP	11/15

No.	Revision Description	Engineer	Date

WHEAT DESIGN GROUP
LANDSCAPE ARCHITECTS

Arizona Blue Stake
1-800-STAKE-IT
1-800-782-5348

Pima County Department of Transportation

PLANTING PLAN
STA. 75+00 TO STA. 79+00
SUNSET ROAD - SEGMENT 1
SILVERBELL RD. TO I-10
PROJECT NO. 4RTSUN

SUNSET ROAD – SILVERBELL ROAD TO I-10 – PROJECT NO. 4RTSUN

Scale: 1"=20' | Sheet L12 of L21 | Page 161 of 203

FILE NAME: M:\Sunset Rd-Sil to Riv-14902-Data\Sheet Files\4RTSUN_PL12.dgn DATE: 11/14/2015 TIME: 8:46:41 AM jpatton

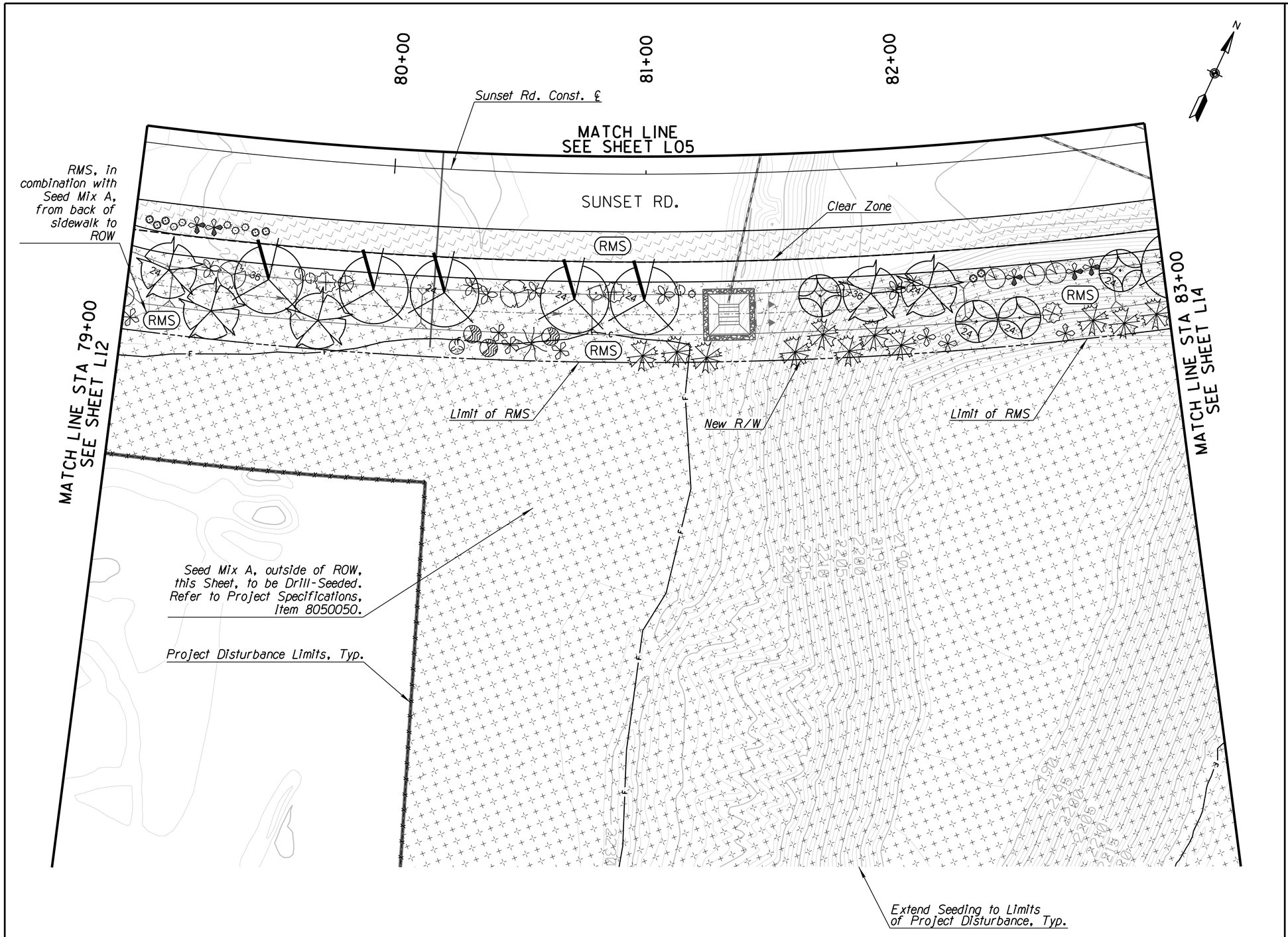

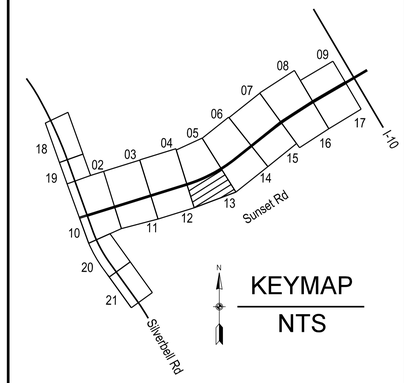

TREES

- *Acacia constricta* — Whitethorn Acacia
- *Acacia greggii* — Catclaw Acacia
- *Celtis reticulata* — Canyon Hackberry
- *Chilopsis linearis* — Desert Willow
- *Prosopis pubescens* — Screwbean Mesquite
- *Prosopis velutina* — Velvet Mesquite

SHRUBS

- *Aloysia wrightii* — Wright's beebrush
- *Anisacanthus thurberi* — Desert Honeysuckle
- *Atriplex canescens* — Four-wing Saltbush
- *Calliandra eriophylla* — Native Fairy Duster
- *Celtis pallida* — Desert Hackberry
- *Ericameria laricifolia* — Turpentine Bush
- *Hyptis emoryi* — Desert Lavender
- *Larrea tridentata* — Creosote
- *Lycium fremontii* — Wolfberry
- *Vauquelinia californica* — Arizona Rosewood
- *Viguiera stenolaba* — Goldeneye
- *Zizyphus obtusifolia* — Graythorn

ACCENTS

- *Cylindropuntia leptocaulis* — Christmas Cholla
- *Cylindropuntia spinosior* — Cane Cholla
- *Dasylirion wheeleri* — Desert Spoon
- *Ferocactus wislizenii* — Fishhook Barrel
- *Fouquieria splendens* — Ocotillo (Seed Grown)
- *Opuntia basilaris* — Beavertail Prickly Pear
- *Opuntia engelmannii* — Engleman's Prickly Pear
- *Opuntia violacea var. santa-rita* — Purple Prickly Pear
- *Yucca baccata* — Banana Yucca

Existing Vegetation to be Preserved in Place

Seed Mix A (Xeroriparian)

Seed Mix B (Riparian)

Seed Mix C (Low Growing)

RMS — Rock Mulch (Special) in Combination with Specified Seed Mix

Granite Mulch

M-# — Mitigation Area in Accordance with Riparian Habitat Mitigation Plans

Mitigation Area Limits

20 0 20 40'

Pima County Department of Transportation

Priscilla S. Cornelio, P.E., Director

No.	Revision Description	Engineer	Date

		Date
Designed	JP	11/15
Drawn	JP	11/15
Checked	LR	11/15
Proj. Engr.	JP	11/15

WHEAT DESIGN GROUP
LANDSCAPE ARCHITECTS

Arizona Blue Stake
1-800-STAKE-IT
1-800-782-5348

PLANTING PLAN
STA. 79+00 TO STA. 83+00
SUNSET ROAD - SEGMENT 1
SILVERBELL RD. TO I-10
PROJECT NO. 4RTSUN

SUNSET ROAD – SILVERBELL ROAD TO I-10 – PROJECT NO. 4RTSUN

Scale: 1"=20' | Sheet L13 of L21 | Page 162 of 203

FILE NAME: M:\Sunset Rd-Sil to Riv-14902-Data\Sheet Files\4RTSUN_PL13.dgn DATE: 11/14/2015 TIME: 8:46:45 AM jpatton

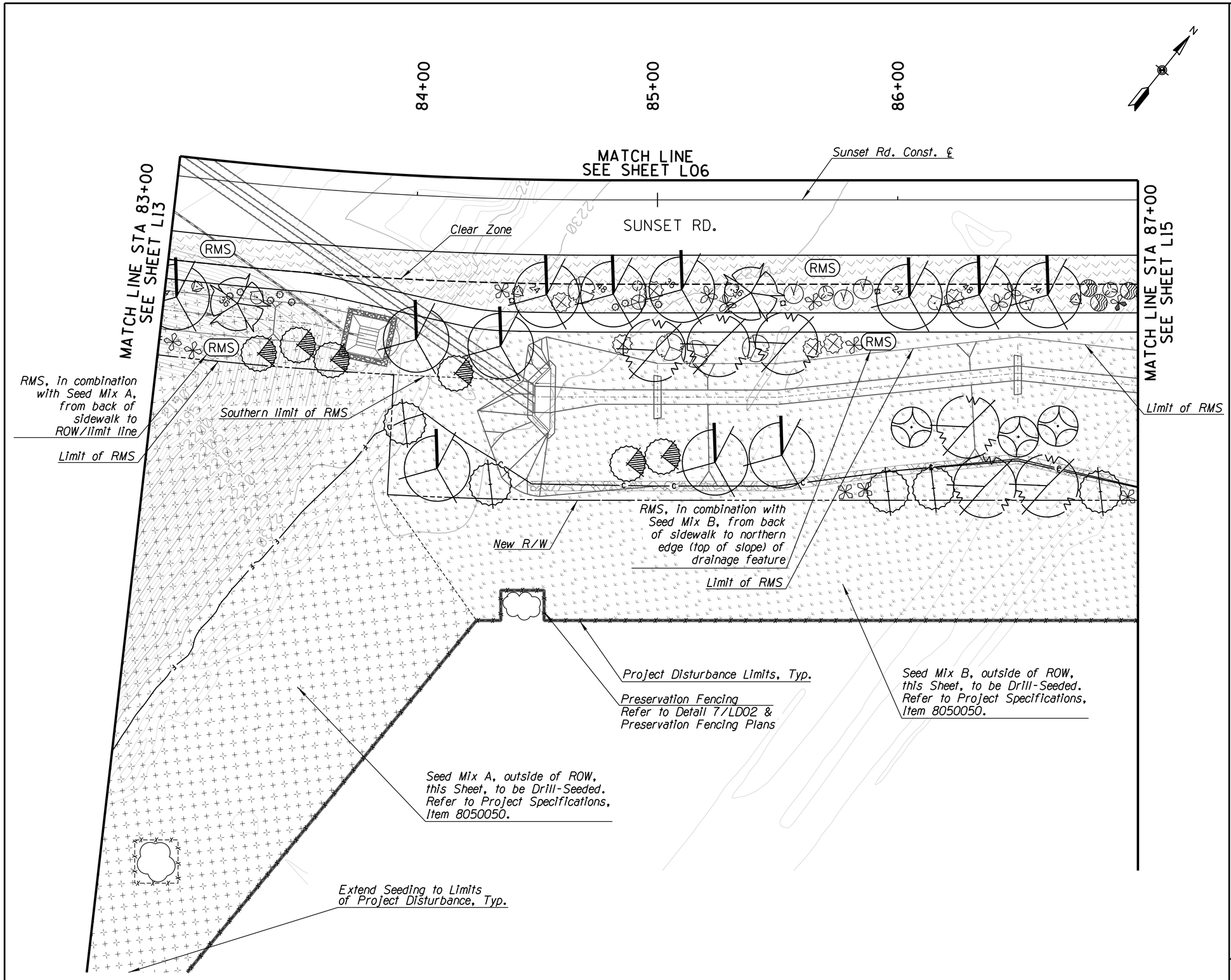

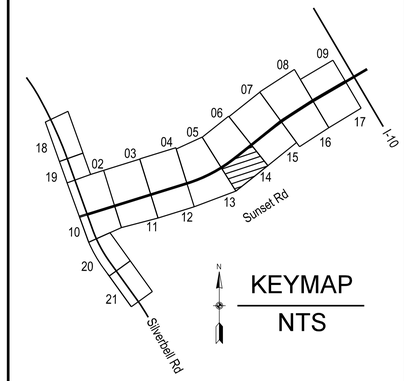

TREES

- *Acacia constricta* — Whitethorn Acacia
- *Acacia greggii* — Catclaw Acacia
- *Celtis reticulata* — Canyon Hackberry
- *Chilopsis linearis* — Desert Willow
- *Prosopis pubescens* — Screwbean Mesquite
- *Prosopis velutina* — Velvet Mesquite

SHRUBS

- *Aloysia wrightii* — Wright's beebrush
- *Anisacanthus thurberi* — Desert Honeysuckle
- *Atriplex canescens* — Four-wing Saltbush
- *Calliandra eriophylla* — Native Fairy Duster
- *Celtis pallida* — Desert Hackberry
- *Ericameria laricifolia* — Turpentine Bush
- *Hyptis emoryi* — Desert Lavender
- *Larrea tridentata* — Creosote
- *Lycium fremontii* — Wolfberry
- *Vauquelinia californica* — Arizona Rosewood
- *Viguiera stenolaba* — Goldeneye
- *Zizyphus obtusifolia* — Graythorn

ACCENTS

- *Cylindropuntia leptocaulis* — Christmas Cholla
- *Cylindropuntia spinosior* — Cane Cholla
- *Dasylirion wheeleri* — Desert Spoon
- *Ferocactus wislizenii* — Fishhook Barrel
- *Fouquieria splendens* — Ocotillo (Seed Grown)
- *Opuntia basilaris* — Beavertail Prickly Pear
- *Opuntia engelmannii* — Engleman's Prickly Pear
- *Opuntia violacea var. santa-rita* — Purple Prickly Pear
- *Yucca baccata* — Banana Yucca

Existing Vegetation to be Preserved in Place

Seed Mix A (Xeroriparian)

Seed Mix B (Riparian)

Seed Mix C (Low Growing)

RMS — Rock Mulch (Special) in Combination with Specified Seed Mix

Granite Mulch

M-# — Mitigation Area in Accordance with Riparian Habitat Mitigation Plans

Mitigation Area Limits

20 0 20 40'

Priscilla S. Cornelio, P.E., Director

		Date
Designed	JP	11/15
Drawn	JP	11/15
Checked	LR	11/15
Proj. Engr.	JP	11/15

No.	Revision Description	Engineer	Date

WHEAT DESIGN GROUP
LANDSCAPE ARCHITECTS

Arizona Blue Stake
1-800-STAKE-IT
1-800-782-5348

Pima County Department of Transportation

PLANTING PLAN
STA. 83+00 TO STA. 87+00
SUNSET ROAD - SEGMENT I
SILVERBELL RD. TO I-10
PROJECT NO. 4RTSUN

SUNSET ROAD – SILVERBELL ROAD TO I-10 – PROJECT NO. 4RTSUN

Scale: 1" = 20' | Sheet L14 of L21 | Page 163 of 203

FILE NAME: M:\Sunset Rd-Sil to Riv-14902-Data\Sheet Files\4RTSUN_PL14.dgn DATE: 11/14/2015 TIME: 8:46:49 AM jpatton

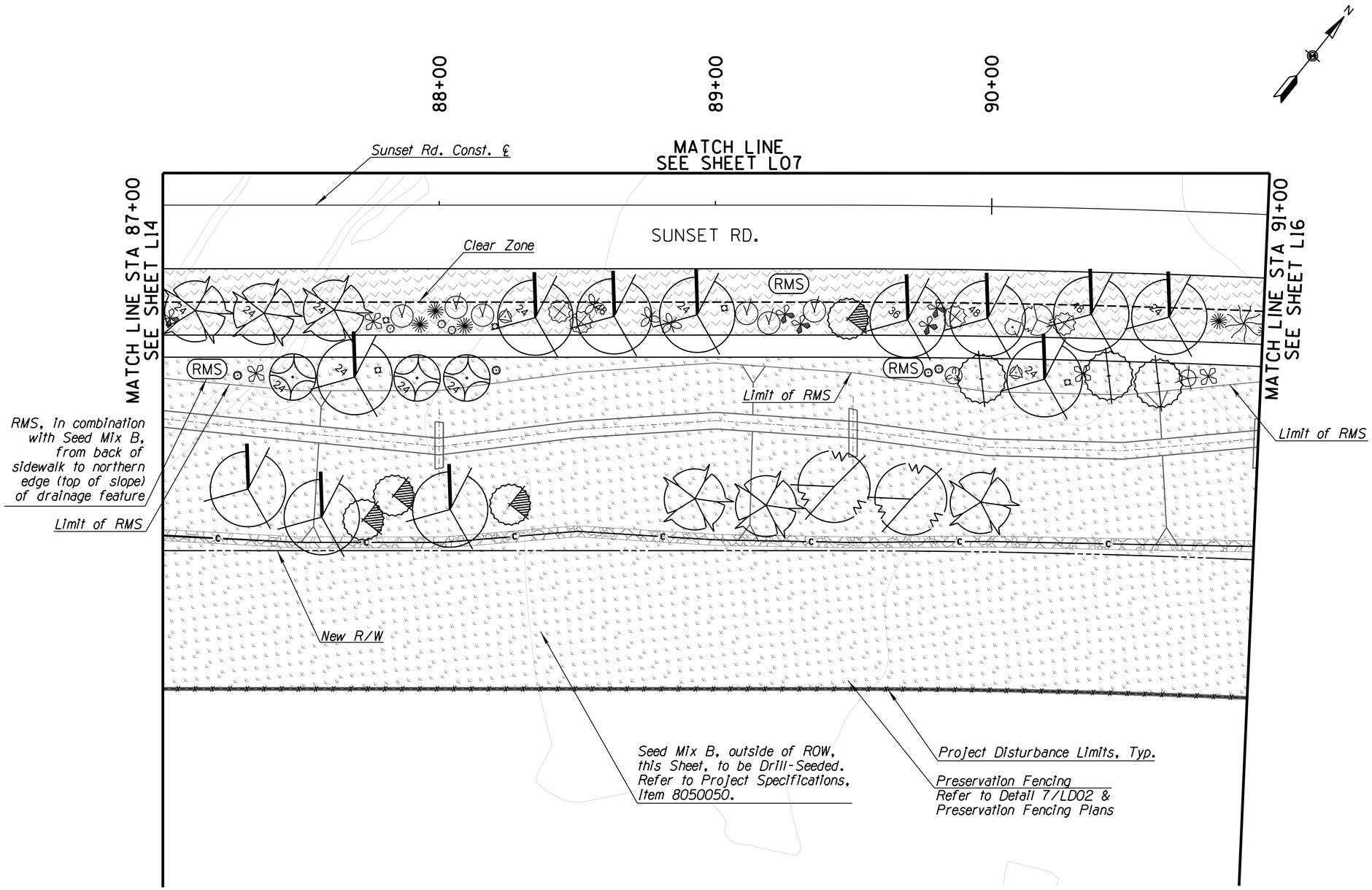

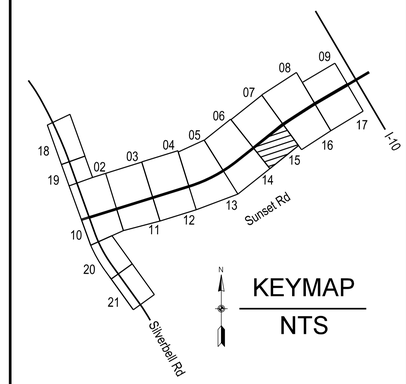

KEYMAP
NTS

TREES

- *Acacia constricta* — Whitethorn Acacia (24)
- *Acacia greggii* — Catclaw Acacia
- *Chilopsis linearis* — Desert Willow (24)
- *Prosopis pubescens* — Screwbean Mesquite
- *Celtis reticulata* — Canyon Hackberry
- *Prosopis velutina* — Velvet Mesquite (36)

SHRUBS

- *Aloysia wrightii* — Wright's beebrush
- *Anisacanthus thurberi* — Desert Honeysuckle
- *Atriplex canescens* — Four-wing Saltbush
- *Calliandra eriophylla* — Native Fairy Duster
- *Celtis pallida* — Desert Hackberry
- *Ericameria laricifolia* — Turpentine Bush
- *Hyptis emoryi* — Desert Lavender
- *Larrea tridentata* — Creosote
- *Lycium fremontii* — Wolfberry
- *Vauquelinia californica* — Arizona Rosewood
- *Viguiera stenolaba* — Goldeneye
- *Zizyphus obtusifolia* — Graythorn

ACCENTS

- *Cylindropuntia leptocaulis* — Christmas Cholla
- *Cylindropuntia spinosior* — Cane Cholla
- *Dasylirion wheeleri* — Desert Spoon
- *Ferocactus wislizenii* — Fishhook Barrel
- *Fouquieria splendens* — Ocotillo (Seed Grown)
- *Opuntia basilaris* — Beavertail Prickly Pear
- *Opuntia engelmannii* — Engleman's Prickly Pear
- *Opuntia violacea var. santa-rita* — Purple Prickly Pear
- *Yucca baccata* — Banana Yucca

Existing Vegetation to be Preserved in Place

Seed Mix A (Xeroriparian)

Seed Mix B (Riparian)

Seed Mix C (Low Growing)

RMS — Rock Mulch (Special) in Combination with Specified Seed Mix

Granite Mulch

M-# — Mitigation Area in Accordance with Riparian Habitat Mitigation Plans

Mitigation Area Limits

20 0 20 40'

Priscilla S. Cornelio, P.E., Director

Designed	JP	11/15
Drawn	JP	11/15
Checked	LR	11/15
Proj. Engr.	JP	11/15

No.	Revision Description	Engineer	Date

WHEAT DESIGN GROUP
LANDSCAPE ARCHITECTS

Arizona Blue Stake
1-800-STAKE-IT
1-800-782-5348
Call Two Working Days Before You Dig

Pima County Department of Transportation

PLANTING PLAN
STA. 87+00 TO STA. 91+00
SUNSET ROAD - SEGMENT 1
SILVERBELL RD. TO I-10
PROJECT NO. 4RTSUN

SUNSET ROAD – SILVERBELL ROAD TO I-10 – PROJECT NO. 4RTSUN

Scale: 1"=20' | Sheet L15 of L21 | Page 164 of 203

FILE NAME: M:\Sunset Rd-Sil to Riv-14902-Data\Sheet Files\4RTSUN_PL15.dgn DATE: 11/14/2015 TIME: 8:46:53 AM jpatton

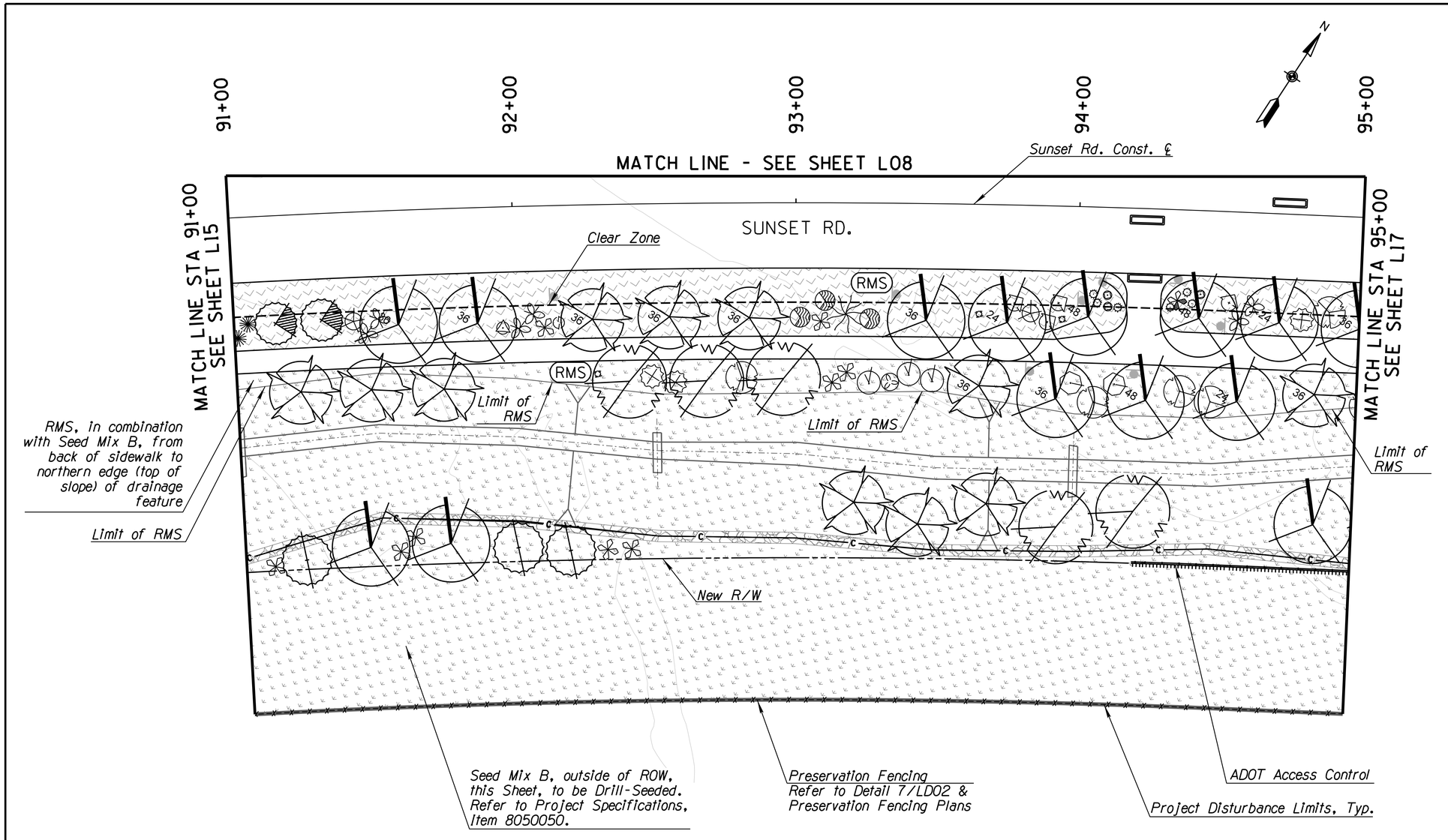

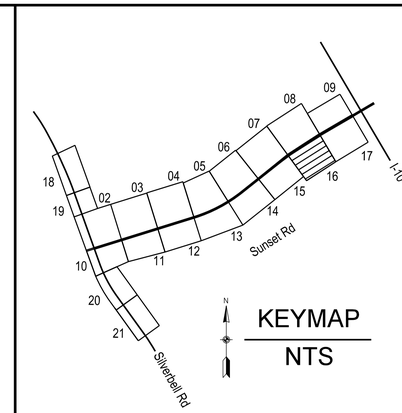

TREES

- *Acacia constricta* — Whitethorn Acacia
- *Acacia greggii* — Catclaw Acacia
- *Celtis reticulata* — Canyon Hackberry

SHRUBS

- *Aloysia wrightii* — Wright's beebrush
- *Anisacanthus thurberi* — Desert Honeysuckle
- *Atriplex canescens* — Four-wing Saltbush
- *Calliandra eriophylla* — Native Fairy Duster
- *Celtis pallida* — Desert Hackberry
- *Ericameria laricifolia* — Turpentine Bush
- *Hyptis emoryi* — Desert Lavender
- *Larrea tridentata* — Creosote
- *Lycium fremontii* — Wolfberry
- *Vauquelinia californica* — Arizona Rosewood
- *Viguiera stenolaba* — Goldeneye
- *Zizyphus obtusifolia* — Graythorn

ACCENTS

- *Cylindropuntia leptocaulis* — Christmas Cholla
- *Cylindropuntia spinosior* — Cane Cholla
- *Dasylirion wheeleri* — Desert Spoon
- *Ferocactus wislizenii* — Fishhook Barrel
- *Fouquieria splendens* — Ocotillo (Seed Grown)
- *Opuntia basilaris* — Beavertail Prickly Pear
- *Opuntia engelmannii* — Engleman's Prickly Pear
- *Opuntia violacea var. santa-rita* — Purple Prickly Pear
- *Yucca baccata* — Banana Yucca

- *Chilopsis linearis* — Desert Willow
- *Prosopis pubescens* — Screwbean Mesquite
- *Prosopis velutina* — Velvet Mesquite
- Existing Vegetation to be Preserved in Place
- Seed Mix A (Xeroriparian)
- Seed Mix B (Riparian)
- Seed Mix C (Low Growing)
- RMS — Rock Mulch (Special) in Combination with Specified Seed Mix
- Granite Mulch
- M-# — Mitigation Area in Accordance with Riparian Habitat Mitigation Plans
- Mitigation Area Limits

20 0 20 40'

Priscilla S. Cornelio, P.E., Director

Designed	JP	11/15
Drawn	JP	11/15
Checked	LR	11/15
Proj. Engr.	JP	11/15

No.	Revision Description	Engineer	Date

EXPIRES 6-30-2016

WHEAT DESIGN GROUP
LANDSCAPE ARCHITECTS

Arizona Blue Stake
1-800-STAKE-IT
Call two working days before you dig

Pima County Department of Transportation

PLANTING PLAN
STA. 91+00 TO STA. 95+00
SUNSET ROAD - SEGMENT 1
SILVERBELL RD. TO I-10
PROJECT NO. 4RTSUN

SUNSET ROAD – SILVERBELL ROAD TO I-10 – PROJECT NO. 4RTSUN

Scale: 1"=20' | Sheet L16 of L21 | Page 165 of 203

FILE NAME: M:\Sunset Rd-Sil to Riv-14902-Data\Sheet Files\4RTSUN_PL16.dgn DATE: 11/14/2015 TIME: 8:46:57 AM jpatton

95+00 96+00 97+00 98+00

MATCH LINE
SEE SHEET L09

SUNSET RD.

Clear Zone

Sunset Rd. Const. ℄

RMS, in combination with Seed Mix B, from back of sidewalk to northern edge (top of slope) of drainage feature

RMS

RMS

Limit of RMS

MATCH LINE STA 95+00
SEE SHEET L16

New R/W

THE LOOP

EB I-10 FRONTAGE RD.

Two 4" SCADA Conduits (G-2008-072)

24" Abandoned Sewer (G-213)

60" HOB Sewer (G-2008-072)

Sewer Manhole (IMS No. 3190-15)

8" Sewer Force Main (G-2007-014)

Exist. R/W

ADOT Access Control

Project Disturbance Limits, Typ.

Preservation Fencing
Refer to Detail 7/LD02 & Preservation Fencing Plans

Limit of RMS. RMS, in combination with Seed Mix B, from back of The Loop to top edge (top of slope) of drainage feature. No RMS outside of ROW.

Seed Mix B, outside of ROW, this Sheet, to be Drill-Seeded. Refer to Project Specifications, Item 8050050.

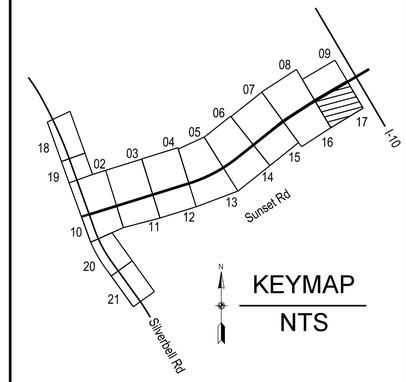

KEYMAP
NTS

TREES

Acacia constricta
Whitethorn Acacia

Acacia greggii
Catclaw Acacia

Celtis reticulata
Canyon Hackberry

Chilopsis linearis
Desert Willow

Prosopis pubescens
Screwbean Mesquite

Prosopis velutina
Velvet Mesquite

SHRUBS

Aloysia wrightii
Wright's beebrush

Anisacanthus thurberi
Desert Honeysuckle

Atriplex canescens
Four-wing Saltbush

Calliandra eriophylla
Native Fairy Duster

Celtis pallida
Desert Hackberry

Ericameria laricifolia
Turpentine Bush

Hyptis emoryi
Desert Lavender

Larrea tridentata
Creosote

Lycium fremontii
Wolfberry

Vauquelinia californica
Arizona Rosewood

Viguiera stenolaba
Goldeneye

Zizyphus obtusifolia
Graythorn

ACCENTS

Cylindropuntia leptocaulis
Christmas Cholla

Cylindropuntia spinosior
Cane Cholla

Dasylirion wheeleri
Desert Spoon

Ferocactus wislizenii
Fishhook Barrel

Fouquieria splendens
Ocotillo (Seed Grown)

Opuntia basilaris
Beavertail Prickly Pear

Opuntia engelmannii
Engleman's Prickly Pear

Opuntia violacea var. santa-rita
Purple Prickly Pear

Yucca baccata
Banana Yucca

Existing Vegetation to be Preserved in Place

Seed Mix A (Xeroriparian)

Seed Mix B (Riparian)

Seed Mix C (Low Growing)

RMS
Rock Mulch (Special) in Combination with Specified Seed Mix

Granite Mulch

M-#
Mitigation Area in Accordance with Riparian Habitat Mitigation Plans

Mitigation Area Limits

20 0 20 40'

Priscilla S. Cornelio, P.E., Director

		Date
Designed	JP	11/15
Drawn	JP	11/15
Checked	LR	11/15
Proj. Engr.	JP	11/15

No.	Revision Description	Engineer	Date

EXPIRES 6-30-2016

WHEAT DESIGN GROUP
LANDSCAPE ARCHITECTS

Arizona Blue Stake
1-800-STAKE-IT
1-800-782-5348
Call Two Working Days Before You Dig

Pima County Department of Transportation

PLANTING PLAN
STA. 95+00 TO STA. 99+00
SUNSET ROAD - SEGMENT 1
SILVERBELL RD. TO I-10
PROJECT NO. 4RTSUN

SUNSET ROAD – SILVERBELL ROAD TO I-10 – PROJECT NO. 4RTSUN

Scale: 1"=20' | Sheet L17 of L21 | Page 166 of 203

FILE NAME: M:\Sunset Rd-Sil to Riv-14902-Data\Sheet Files\4RTSUN_PL17.dgn DATE: 11/14/2015 TIME: 8:47:01 AM jpatton

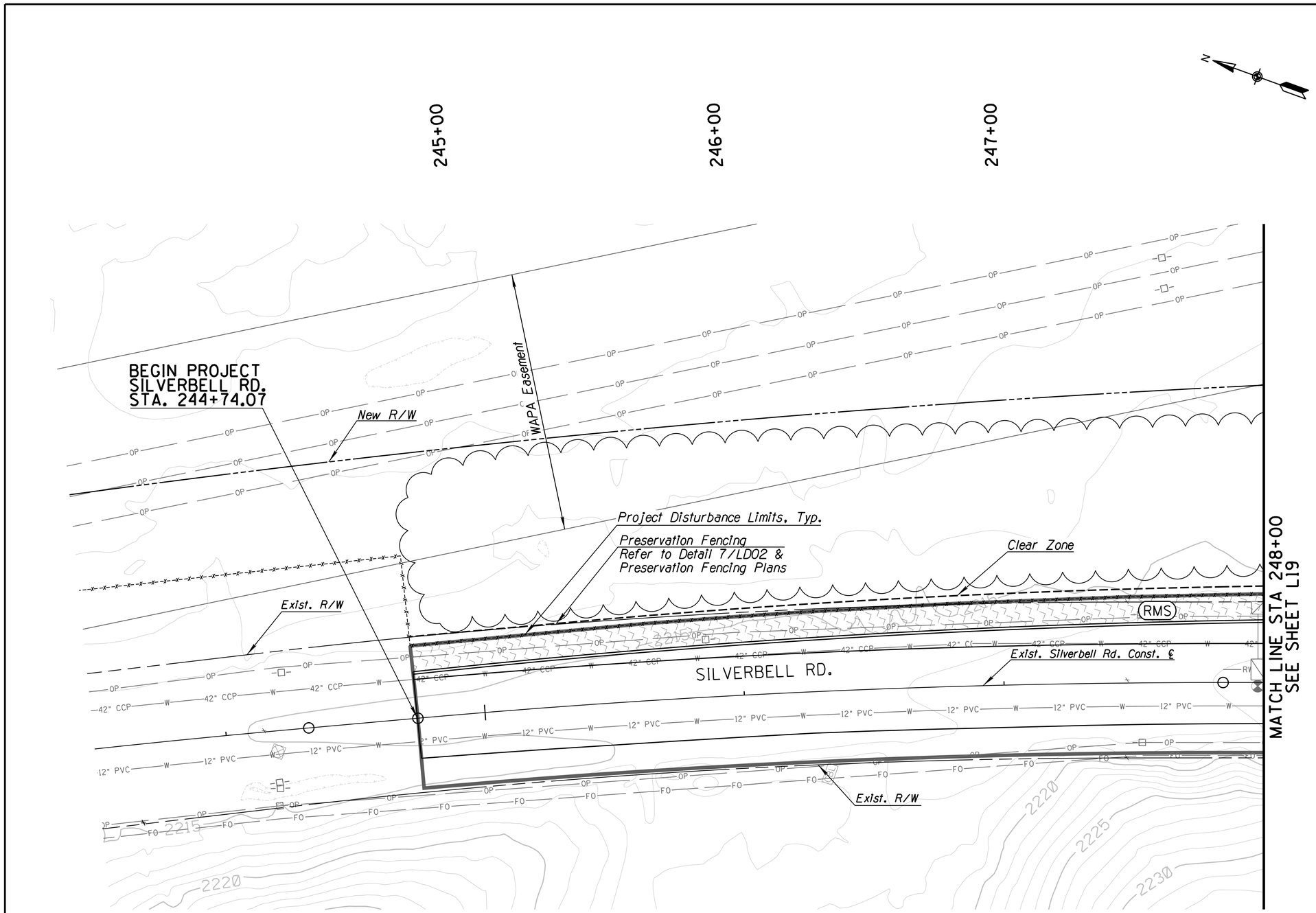

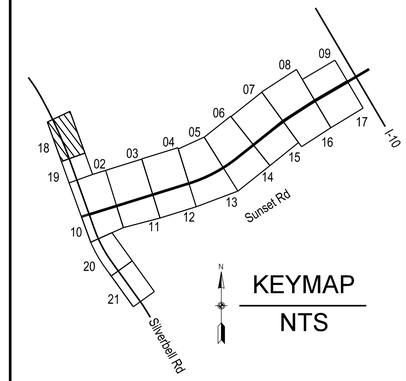

TREES

- *Acacia constricta* — Whitethorn Acacia
- *Acacia greggii* — Catclaw Acacia
- *Celtis reticulata* — Canyon Hackberry
- *Chilopsis linearis* — Desert Willow (24)
- *Prosopis pubescens* — Screwbean Mesquite
- *Prosopis velutina* — Velvet Mesquite (36)

SHRUBS

- *Aloysia wrightii* — Wright's beebrush
- *Anisacanthus thurberi* — Desert Honeysuckle
- *Atriplex canescens* — Four-wing Saltbush
- *Calliandra eriophylla* — Native Fairy Duster
- *Celtis pallida* — Desert Hackberry
- *Ericameria laricifolia* — Turpentine Bush
- *Hyptis emoryi* — Desert Lavender
- *Larrea tridentata* — Creosote
- *Lycium fremontii* — Wolfberry
- *Vauquelinia californica* — Arizona Rosewood
- *Viguiera stenolaba* — Goldeneye
- *Zizyphus obtusifolia* — Graythorn

ACCENTS

- *Cylindropuntia leptocaulis* — Christmas Cholla
- *Cylindropuntia spinosior* — Cane Cholla
- *Dasylirion wheeleri* — Desert Spoon
- *Ferocactus wislizenii* — Fishhook Barrel
- *Fouquieria splendens* — Ocotillo (Seed Grown)
- *Opuntia basilaris* — Beavertail Prickly Pear
- *Opuntia engelmannii* — Engleman's Prickly Pear
- *Opuntia violacea var. santa-rita* — Purple Prickly Pear
- *Yucca baccata* — Banana Yucca

Existing Vegetation to be Preserved in Place

Seed Mix A (Xeroriparian)

Seed Mix B (Riparian)

Seed Mix C (Low Growing)

RMS — Rock Mulch (Special) in Combination with Specified Seed Mix

Granite Mulch

M-# — Mitigation Area in Accordance with Riparian Habitat Mitigation Plans

Mitigation Area Limits

20 0 20 40'

Priscilla S. Cornelio, P.E., Director

		Date
Designed	JP	11/15
Drawn	JP	11/15
Checked	LR	11/15
Proj. Engr.	JP	11/15

No.	Revision Description	Engineer	Date

REGISTERED PROFESSIONAL ARCHITECT — JAMES KENTON FULTON — ARIZONA — EXPIRES 6-30-2016

WHEAT DESIGN GROUP — LANDSCAPE ARCHITECTS

Arizona Blue Stake, Inc. — 1-800-STAKE-IT (1-800-782-5348) — Call two working days before you dig

Pima County Department of Transportation

PLANTING PLAN
STA. XXX+XX TO STA. 248+00
SUNSET ROAD - SEGMENT I
SILVERBELL RD. TO I-10
PROJECT NO. 4RTSUN

SUNSET ROAD – SILVERBELL ROAD TO I-10 – PROJECT NO. 4RTSUN

Scale: 1"=20' | Sheet L18 of L21 | Page 167 of 203

FILE NAME: M:\Sunset Rd-Sil to Riv-14902-Data\Sheet Files\4RTSUN_PL18.dgn DATE: 11/14/2015 TIME: 8:47:05 AM jpatton

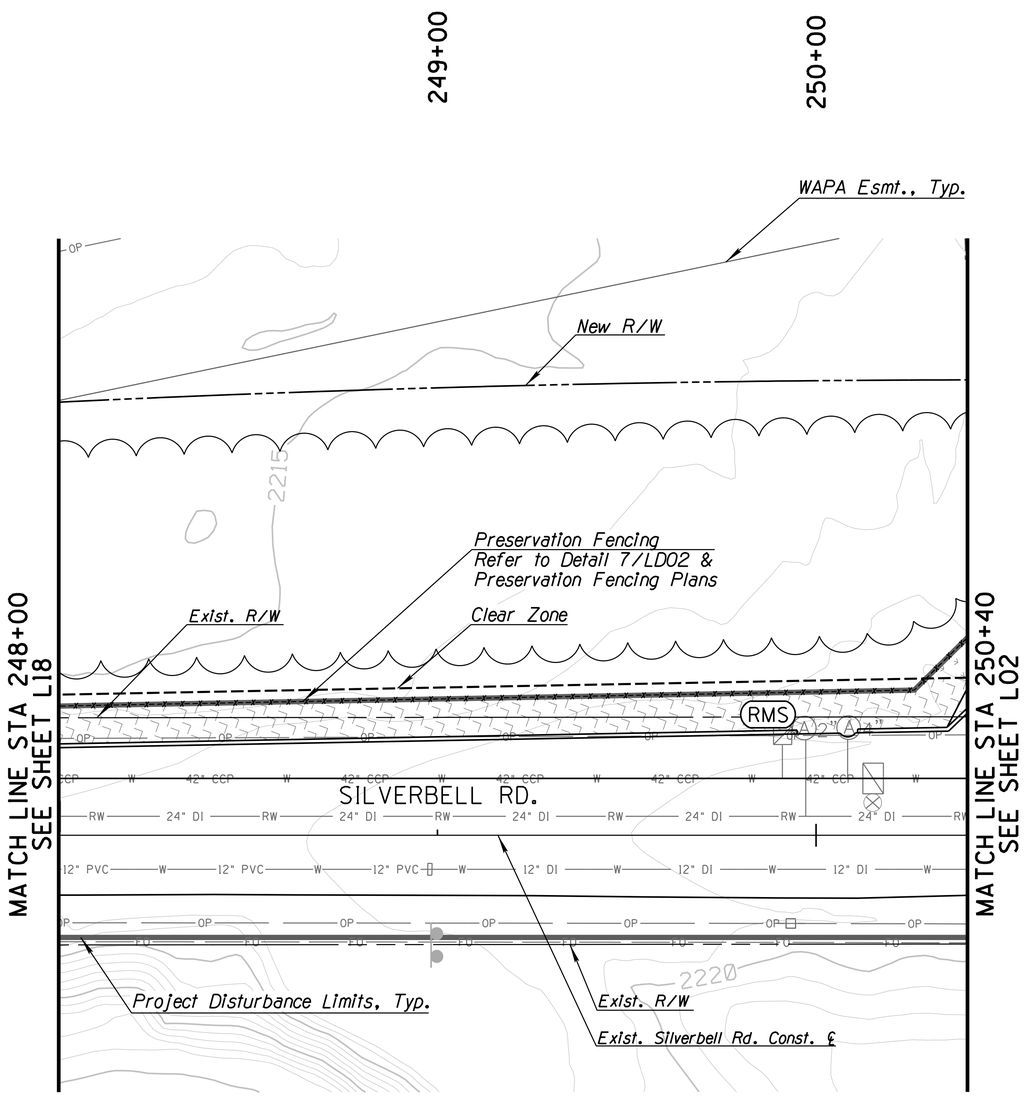

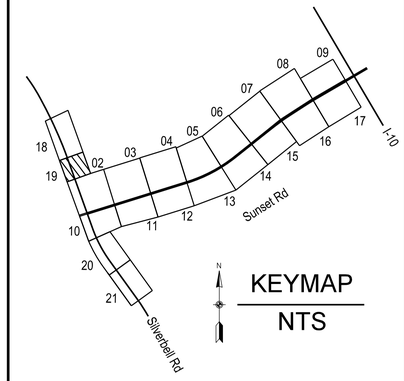

TREES

- *Acacia constricta* — Whitethorn Acacia (24)
- *Acacia greggii* — Catclaw Acacia
- *Chilopsis linearis* — Desert Willow
- *Prosopis pubescens* — Screwbean Mesquite
- *Celtis reticulata* — Canyon Hackberry (36)
- *Prosopis velutina* — Velvet Mesquite

SHRUBS

- *Aloysia wrightii* — Wright's beebrush
- *Anisacanthus thurberi* — Desert Honeysuckle
- *Atriplex canescens* — Four-wing Saltbush
- *Calliandra eriophylla* — Native Fairy Duster
- *Celtis pallida* — Desert Hackberry
- *Ericameria laricifolia* — Turpentine Bush
- *Hyptis emoryi* — Desert Lavender
- *Larrea tridentata* — Creosote
- *Lycium fremontii* — Wolfberry
- *Vauquelinia californica* — Arizona Rosewood
- *Viguiera stenolaba* — Goldeneye
- *Zizyphus obtusifolia* — Graythorn

ACCENTS

- *Cylindropuntia leptocaulis* — Christmas Cholla
- *Cylindropuntia spinosior* — Cane Cholla
- *Dasylirion wheeleri* — Desert Spoon
- *Ferocactus wislizenii* — Fishhook Barrel
- *Fouquieria splendens* — Ocotillo (Seed Grown)
- *Opuntia basilaris* — Beavertail Prickly Pear
- *Opuntia engelmannii* — Engleman's Prickly Pear
- *Opuntia violacea var. santa-rita* — Purple Prickly Pear
- *Yucca baccata* — Banana Yucca

Existing Vegetation to be Preserved in Place

Seed Mix A (Xeroriparian)

Seed Mix B (Riparian)

Seed Mix C (Low Growing)

RMS — Rock Mulch (Special) in Combination with Specified Seed Mix

Granite Mulch

M-# — Mitigation Area in Accordance with Riparian Habitat Mitigation Plans

Mitigation Area Limits

20 0 20 40'

Priscilla S. Cornelio, P.E., Director

		Date
Designed	JP	11/15
Drawn	JP	11/15
Checked	LR	11/15
Proj. Engr.	JP	11/15

No.	Revision Description	Engineer	Date

WHEAT DESIGN GROUP — LANDSCAPE ARCHITECTS

Arizona Blue Stake 1-800-STAKE-IT 1-800-782-5348

Pima County Department of Transportation

PLANTING PLAN
STA. 248+00 TO STA. 250+40
SUNSET ROAD - SEGMENT I
SILVERBELL RD. TO I-10
PROJECT NO. 4RTSUN

SUNSET ROAD – SILVERBELL ROAD TO I-10 – PROJECT NO. 4RTSUN

Scale: 1" = 20' | Sheet L19 of L21 | Page 168 of 203

FILE NAME: M:\Sunset Rd-Sil to Riv-14902-Data\Sheet Files\4RTSUN_PL19.dgn DATE: 11/14/2015 TIME: 8:47:09 AM jpatton

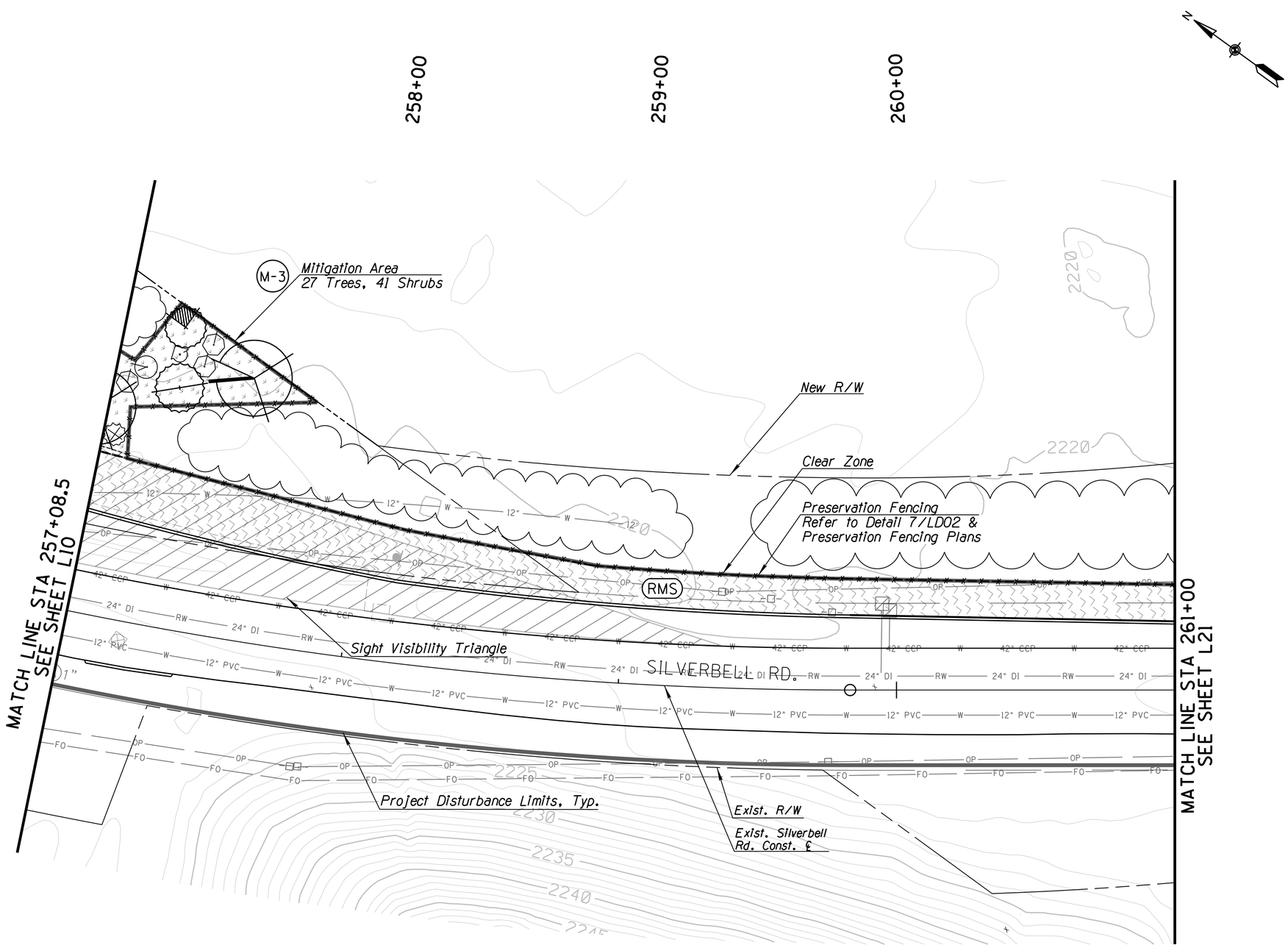

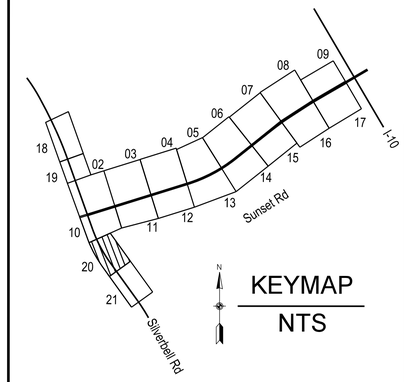

KEYMAP
NTS

TREES

Acacia constricta
Whitethorn Acacia

Acacia greggii
Catclaw Acacia

Celtis reticulata
Canyon Hackberry

Chilopsis linearis
Desert Willow

Prosopis pubescens
Screwbean Mesquite

Prosopis velutina
Velvet Mesquite

SHRUBS

Aloysia wrightii
Wright's beebrush

Anisacanthus thurberi
Desert Honeysuckle

Atriplex canescens
Four-wing Saltbush

Calliandra eriophylla
Native Fairy Duster

Celtis pallida
Desert Hackberry

Ericameria laricifolia
Turpentine Bush

Hyptis emoryi
Desert Lavender

Larrea tridentata
Creosote

Lycium fremontii
Wolfberry

Vauquelinia californica
Arizona Rosewood

Viguiera stenolaba
Goldeneye

Zizyphus obtusifolia
Graythorn

ACCENTS

Cylindropuntia leptocaulis
Christmas Cholla

Cylindropuntia spinosior
Cane Cholla

Dasylirion wheeleri
Desert Spoon

Ferocactus wislizenii
Fishhook Barrel

Fouquieria splendens
Ocotillo (Seed Grown)

Opuntia basilaris
Beavertail Prickly Pear

Opuntia engelmannii
Engleman's Prickly Pear

Opuntia violacea var. santa-rita
Purple Prickly Pear

Yucca baccata
Banana Yucca

Existing Vegetation to be Preserved in Place

Seed Mix A (Xeroriparian)

Seed Mix B (Riparian)

Seed Mix C (Low Growing)

RMS
Rock Mulch (Special) in Combination with Specified Seed Mix

Granite Mulch

M-#
Mitigation Area in Accordance with Riparian Habitat Mitigation Plans

Mitigation Area Limits

20 0 20 40'

Priscilla S. Cornelio, P.E., Director

Designed	JP	11/15
Drawn	JP	11/15
Checked	LR	11/15
Proj. Engr.	JP	11/15

No.	Revision Description	Engineer	Date

WHEAT DESIGN GROUP
LANDSCAPE ARCHITECTS

Arizona Blue Stake
1-800-STAKE-IT
1-800-782-5348
Call two working days before you dig

Pima County Department of Transportation

PLANTING PLAN
STA. 254+30 TO STA. 261+00
SUNSET ROAD - SEGMENT I
SILVERBELL RD. TO I-10
PROJECT NO. 4RTSUN

SUNSET ROAD – SILVERBELL ROAD TO I-10 – PROJECT NO. 4RTSUN

Scale:	1" = 20'	Sheet L20 of L21	Page 169 of 203

FILE NAME: M:\Sunset Rd-Sil to Riv-14902-Data\Sheet Files\4RTSUN_PL20.dgn DATE: 11/14/2015 TIME: 8:47:13 AM jpatton

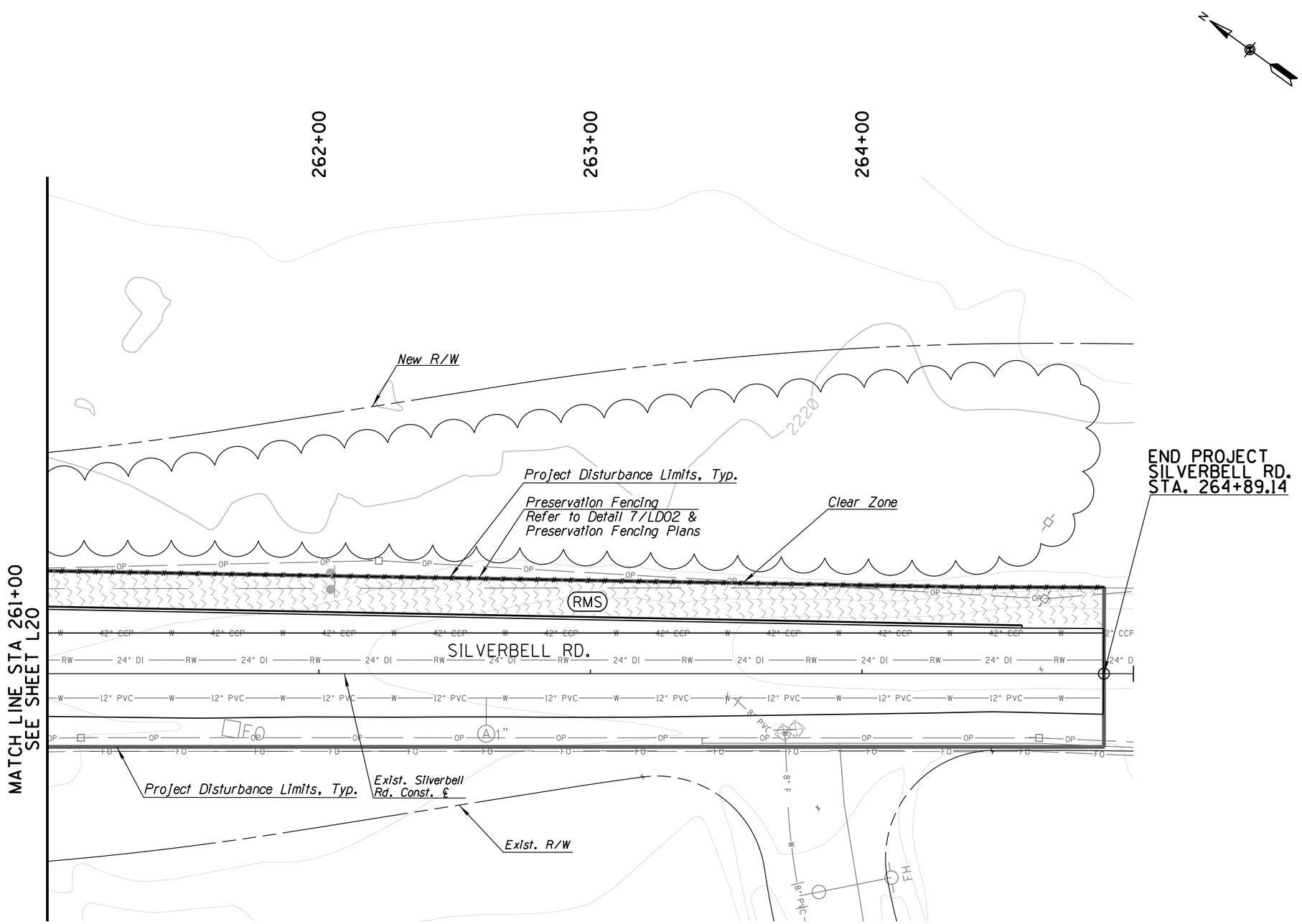

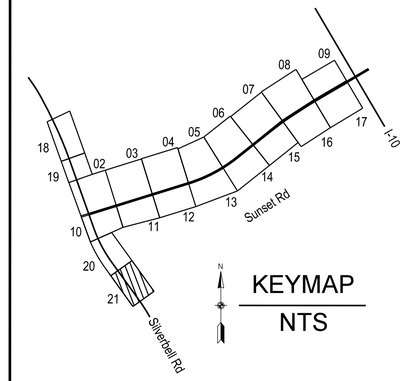

TREES

- *Acacia constricta* — Whitethorn Acacia
- *Acacia greggii* — Catclaw Acacia
- *Celtis reticulata* — Canyon Hackberry
- *Chilopsis linearis* — Desert Willow
- *Prosopis pubescens* — Screwbean Mesquite
- *Prosopis velutina* — Velvet Mesquite

SHRUBS

- *Aloysia wrightii* — Wright's beebrush
- *Anisacanthus thurberi* — Desert Honeysuckle
- *Atriplex canescens* — Four-wing Saltbush
- *Calliandra eriophylla* — Native Fairy Duster
- *Celtis pallida* — Desert Hackberry
- *Ericameria laricifolia* — Turpentine Bush
- *Hyptis emoryi* — Desert Lavender
- *Larrea tridentata* — Creosote
- *Lycium fremontii* — Wolfberry
- *Vauquelinia californica* — Arizona Rosewood
- *Viguiera stenolaba* — Goldeneye
- *Zizyphus obtusifolia* — Graythorn

ACCENTS

- *Cylindropuntia leptocaulis* — Christmas Cholla
- *Cylindropuntia spinosior* — Cane Cholla
- *Dasylirion wheeleri* — Desert Spoon
- *Ferocactus wislizenii* — Fishhook Barrel
- *Fouquieria splendens* — Ocotillo (Seed Grown)
- *Opuntia basilaris* — Beavertail Prickly Pear
- *Opuntia engelmannii* — Engleman's Prickly Pear
- *Opuntia violacea var. santa-rita* — Purple Prickly Pear
- *Yucca baccata* — Banana Yucca

Existing Vegetation to be Preserved in Place

Seed Mix A (Xeroriparian)

Seed Mix B (Riparian)

Seed Mix C (Low Growing)

RMS — Rock Mulch (Special) in Combination with Specified Seed Mix

Granite Mulch

M-# — Mitigation Area in Accordance with Riparian Habitat Mitigation Plans

Mitigation Area Limits

20 0 20 40'

Priscilla S. Cornelio, P.E., Director

		Date
Designed	JP	11/15
Drawn	JP	11/15
Checked	LR	11/15
Proj. Engr.	JP	11/15

No.	Revision Description	Engineer	Date

EXPIRES 6-30-2016

WHEAT DESIGN GROUP
LANDSCAPE ARCHITECTS

Arizona Blue Stake
1-800-STAKE-IT
1-800-782-5348
Call two working days before you dig

Pima County Department of Transportation

PLANTING PLAN
STA. 261+00 TO STA. 265+00
SUNSET ROAD - SEGMENT I
SILVERBELL RD. TO I-10
PROJECT NO. 4RTSUN

SUNSET ROAD - SILVERBELL ROAD TO I-10 - PROJECT NO. 4RTSUN

Scale: 1" = 20' | Sheet L21 of L21 | Page 170 of 203

FILE NAME: M:\Sunset Rd-Sil to Riv-14902-Data\Sheet Files\4RTSUN_PL21.dgn DATE: 11/14/2015 TIME: 8:47:17 AM jpatton

NOTES:
1. ALL TREES TO BE LOW BRANCHING OR MULTI-TRUNK. NO STANDARD TREES TO BE USED.
2. NO TREES TO BE STAKED EXCEPT AT THE DIRECTION OF THE ENGINEER
3. DEPTH OF PLANT PIT = DEPTH OF ROOT BALL

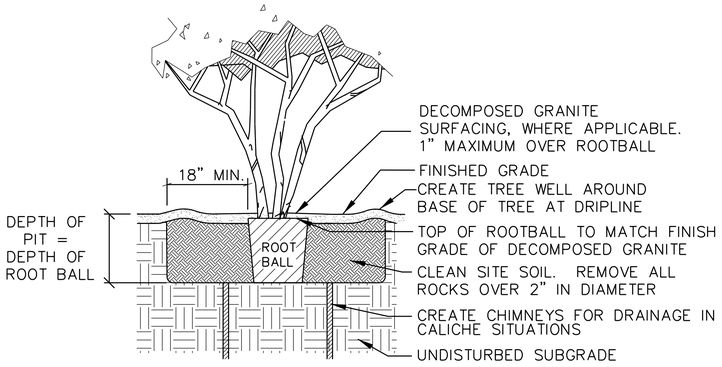

1 TREE PLANTING 806
SCALE: N.T.S. PCDOT 2/3/12

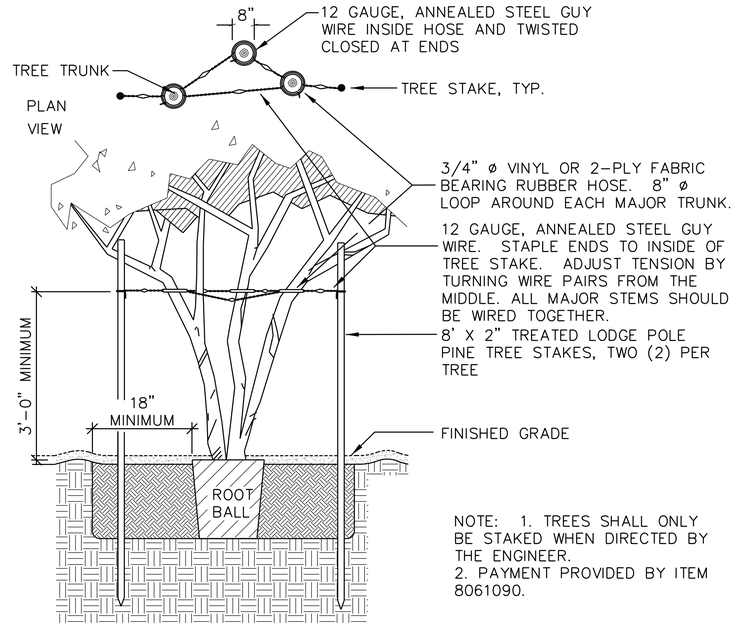

NOTE: 1. TREES SHALL ONLY BE STAKED WHEN DIRECTED BY THE ENGINEER.
2. PAYMENT PROVIDED BY ITEM 8061090.

2 TREE STAKING 806
SCALE: N.T.S. PCDOT 2/3/2012

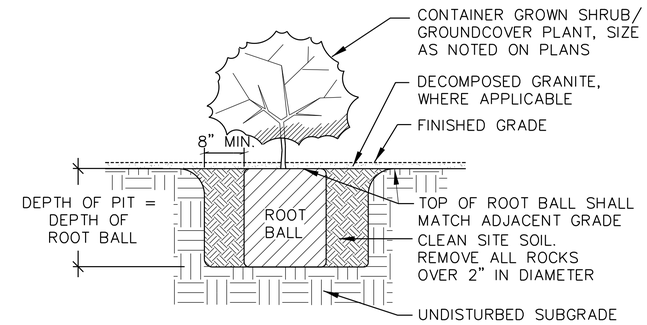

PLANTING – NURSERY STOCK: SHRUB – 1, 5 & 15 GAL. / TREEPOT P-204
3 SCALE: N.T.S. PCDOT 2/03/12

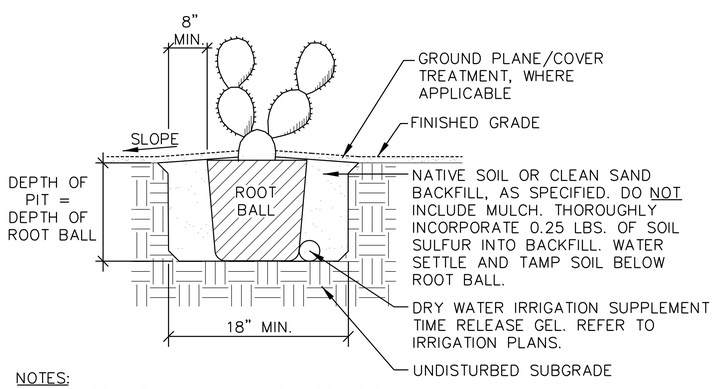

NOTES:
1. DO NOT CREATE A BASIN AT BASE OF PLANT. SLOPE BACKFILL AWAY FROM STEM.
2. SET STEM SUCCULENT SO THAT TOP OF ROOT BALL MATCHES ADJACENT GRADE.
3. THIS DETAIL APPLIES TO NURSERY GROWN STOCK OF GENUS OPUNTIA & FOUQUIERIA.
4. PLACE (1) DRY WATER IRRIGATION SUPPLEMENT TIME RELEASE GEL IN BOTTOM OF PLANTING HOLE, AS SHOWN ABOVE, PER MANUFACTURER'S SPECIFICATIONS. POSITION THE GEL AGAINST THE ROOT. MAKE SURE THAT THE GEL IS IN FULL CONTACT WITH THE ROOTBALL. REFER TO SPECIAL PROVISIONS. PAYMENT FOR DRY WATER GEL IS PROVIDED BY ITEM 8080051.

PLANTING – NURSERY STOCK: PRICKLY PEAR, CHOLLA, AND OCOTILLO (CONTAINER GROWN) P-207
4 SCALE: N.T.S. PCDOT 2/03/2012

NOTES:
1. DO NOT CREATE A BASIN AT BASE OF CACTUS. SLOPE BACKFILL AWAY FROM STEM.
2. SET CACTUS SO THAT TOP OF ROOT BALL MATCHES ADJACENT GRADE.
3. THIS DETAIL APPLIES TO NURSERY GROWN STOCK OF THE GENERA CEREUS, FEROCACTUS, CYLINDROPUNTIA AND STENOCEREUS.
4. PLACE (1) DRY WATER IRRIGATION SUPPLEMENT TIME RELEASE GEL IN BOTTOM OF PLANTING HOLE, AS SHOWN BELOW, PER MANUFACTURER'S SPECIFICATIONS. POSITION THE GEL AGAINST THE ROOT. MAKE SURE THAT THE GEL IS IN FULL CONTACT WITH THE ROOTBALL. REFER TO SPECIAL PROVISIONS. PAYMENT FOR DRY WATER GEL IS PROVIDED BY ITEM 8080051.

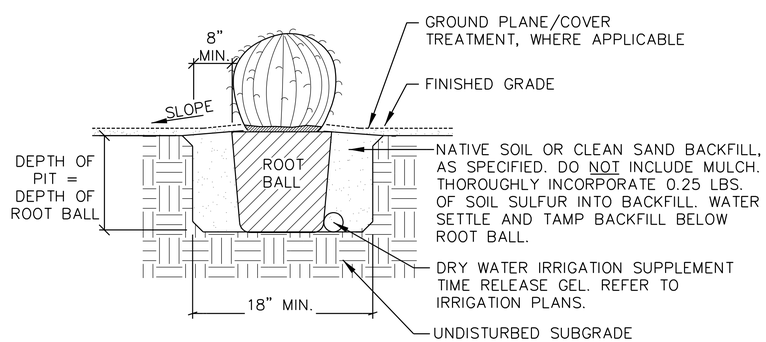

PLANTING – NURSERY STOCK: BARREL AND COLUMNAR CACTUS – CONTAINER GROWN P-205
5 SCALE: N.T.S. PCDOT 2/03/12

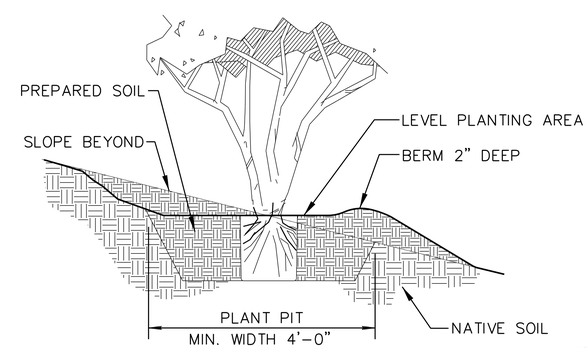

PLANTING ON SLOPES - TREE SECTION NTS

NOTES:
1. SLOPE PLANTING DETAILS ESTABLISH HORIZONTAL PLANTING AREAS. REFER TO TREE PLANTING AND SHRUB/GROUNDCOVER DETAILS, THIS SHEET, FOR ADDITIONAL REQUIREMENTS.

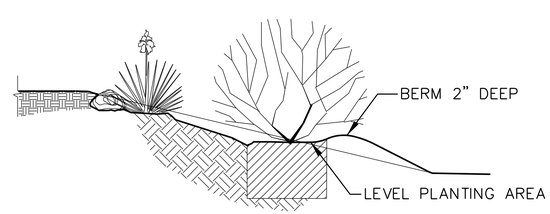

6 PLANTING ON SLOPES - SHRUB SECTION NTS

Priscilla S. Cornelio, P.E., Director

Designed	JP	11/15
Drawn	HF	11/15
Checked	LR	11/15
Proj. Engr.	JP	11/15

No.	Revision Description	Engineer	Date

WHEAT DESIGN GROUP LANDSCAPE ARCHITECTS

Arizona Blue Stake 1-800-STAKE-IT 1-800-782-5348

Pima County Department of Transportation

PLANTING DETAILS

SUNSET ROAD - SEGMENT I
SILVERBELL RD. TO I-10
PROJECT NO. 4RTSUN

SUNSET ROAD – SILVERBELL ROAD TO I-10 – PROJECT NO. 4RTSUN

Scale: | Sheet LD01 of LD02 | Page 171 of 203

FILE NAME: M:\Sunset Rd-Sil to Riv-14902-Data\Sheet Files\4RTSUN_PLD22.dgn DATE: 11/14/2015 TIME: 8:47:18 AM jpatton

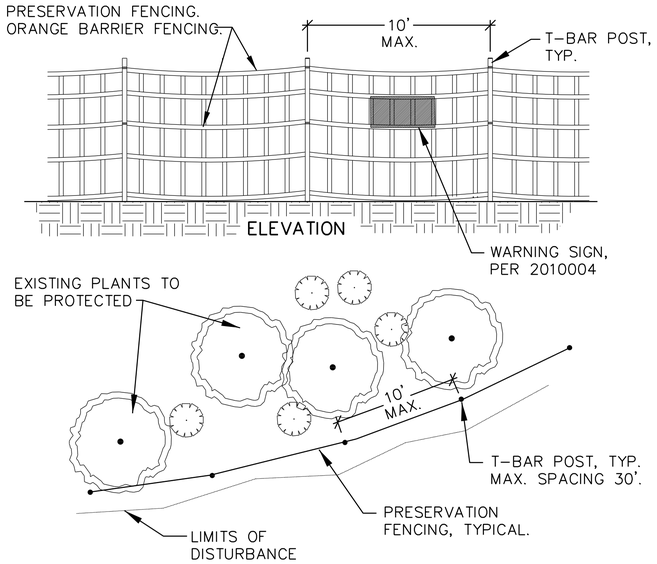

NOTES:
1. PLACE WARNING SIGNS ON PRESERVATION FENCING, PER ITEM 2010004.
2. PAYMENT PROVIDED UNDER ITEM #2010004.

7 PRESERVATION FENCING DETAIL 201

SCALE: N.T.S. PCDOT 2/03/2012

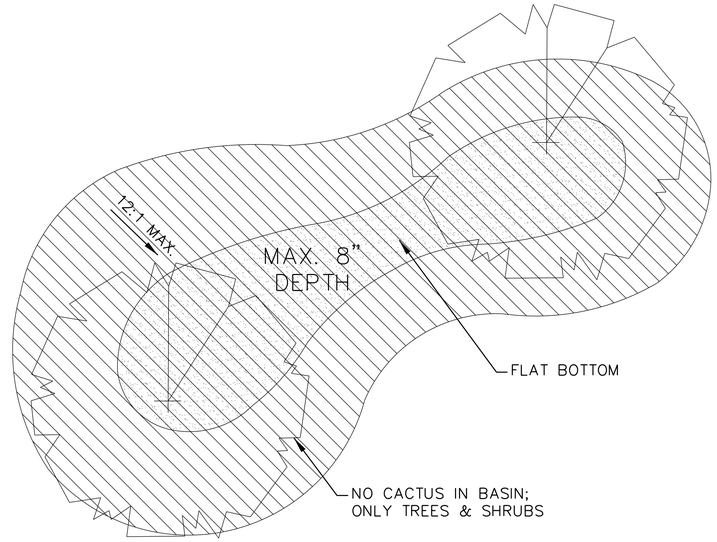

NOTE:
1. SIZE OF BASINS VARY; REFER TO PLANS.
2. ALL BASINS TO BE FIELD MARKED AND VERIFIED BY PIMA COUNTY LANDSCAPE ARCHITECT PRIOR TO CONSTRUCTION.
3. PAYMENT PROVIDED BY ITEM 8020010.

8 WATER HARVESTING BASIN

SCALE: N.T.S.

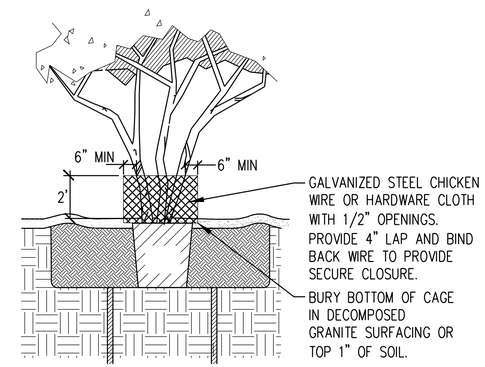

9 BROWSER CAGE 807

SCALE: N.T.S. PCDOT 2/03/2012

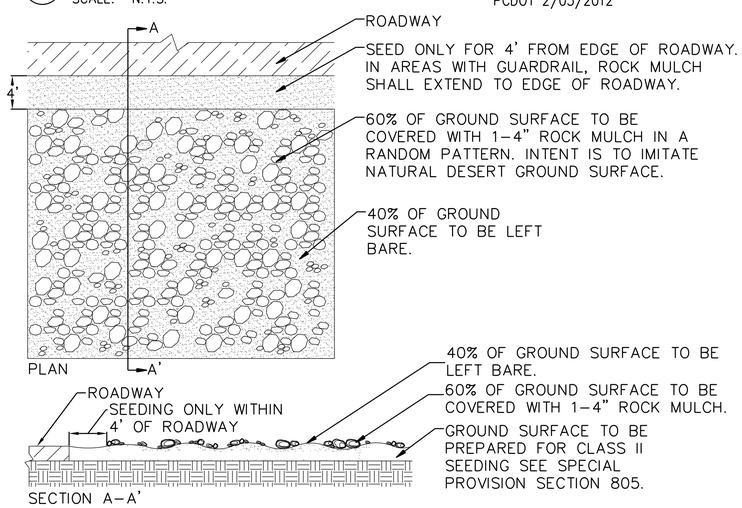

NOTES:
1. NO PRE-EMERGENT HERBICIDES TO BE USED IN SEEDED AREAS.
2. GROUND SURFACE TO BE PREPARED FOR CLASS II SEEDING SEE SPECIAL PROVISION SECTION 805.
3. SEEDING TO BE APPLIED AFTER APPLICATION OF ROCK MULCH.
4. NO ROCK MULCH WITHIN 4' OF ROADWAY EDGE, EXCEPT FOR WHEN BEHIND GUARDRAIL.
5. PAYMENT PROVIDED BY ITEM 8030029.

1-4" ROCK

MULCH	
SIEVE SIZE	PERCENT PASSING
4"	100%
1"	0-10%

10 ROCK MULCH SPECIAL (USE WITH SEED MIX) 803

SCALE: N.T.S. PCDOT

Priscilla S. Cornelio, P.E., Director

	Designed	JP	11/15
	Drawn	HF	11/15
	Checked	LR	11/15
	Proj. Engr.	JP	11/15

No.	Revision Description	Engineer	Date

EXPIRES 6-30-2016

WHEAT DESIGN GROUP
LANDSCAPE ARCHITECTS

Arizona Blue Stake
1-800-STAKE-IT
Call two working days before you dig

Pima County Department of Transportation

PLANTING DETAILS

SUNSET ROAD - SEGMENT 1
SILVERBELL RD. TO I-10
PROJECT NO. 4RTSUN

SUNSET ROAD - SILVERBELL ROAD TO I-10 - PROJECT NO. 4RTSUN

Scale: | Sheet LD02 of LD02 | Page 172 of 203

FILE NAME: M:\Sunset Rd-Sil to Riv-14902-Data\Sheet Files\4RTSUN_PLD23.dgn DATE: 11/14/2015 TIME: 8:47:21 AM jpatton

IRRIGATION EQUIPMENT SCHEDULE

SYMBOL	ITEM	SIZE	QUANTITY
A	Controller A - Rainbird MDC-2 Wire Irrigation Controller	N/A	1
M	New Water Meter	1½"	1
	R.P. Backflow Preventer	1½"	1
M	Master Valve	1"	1
F	Flow Sensor	1"	1
	Control Valve (Remote) (Electric)	1"	19
	Pressure Regulator Riser	¾"	41
	Mitigation Area Isolation Ball Valve	¾"	8
P	Control Wire Pull Box	Refer to Specs.	2
2 4 S	Rainbird Sensor or Valve Decoder 1, 2, 4, 6, or S Device	N/A	6
	Ground Rod w/ Lightning Surge Protector	N/A	9
R	Pressure Relief Valve	¾"	2
	Mainline PVC Sch. 40	2"	1830 L.F.
	Mainline HDPE (See Plans for Locations)	2"	780 L.F.
	Submain Class Sch 40 PVC	1"	5900 L.F.
T T	Lateral Line Sch 40 PVC (Trees)	¾"	9,100 L.F.
S S	Lateral Line Sch 40 PVC (Shrub)	¾"	10,080 L.F.
	Lateral End Cap Assembly	N/A	143 EA.
	Sleeve SCH 40 PVC	6"	260 L.F.
		4"	300 L.F.
	Sleeve HDPE PVC	6"	40 L.F.
Not Shown	Emitter Assembly (Multi-port. 0.5 gph, 1 gph, 2 gph each)	N/A	740 EA.

NOTES:
1. Refer to Special Provisions for Additional Requirements.
2. Refer to General Notes, Sheet GN01, for Irrigation Sleeve Schedule showing sleeves crossing beneath roadways and sleeves at bridge abutments.

GENERAL IRRIGATION NOTES:
1. Placement of all Irrigation components, including location of pipe, points of connection, valves, controllers and meters shall be field staked and approved by the Engineer prior to installation.
2. Irrigation Mainline, Water Meters, Valves, Flow Sensors, Controllers, and Backflow Preventers shall be located outside of Utility Easements and within Pima County R/W. Wherever possible, Submains and laterals shall be located outside of Utility Easements.
3. Mainline and Submains shall run parallel to Sunset Road where possible.
4. Where Pressure Regulators are located between edge of roadway and path, they shall be protected with rock. Refer to Detail 11, Sheet IRD02.
5. (M-#) Indicates Riparian Mitigation Area. Manual shutoff valve to be provided at Riparian Mitigation Areas to allow irrigation to be turned off after establishment period.
6. Irrigation mainline to be offset 6' minimum from ITS line. Refer to Details.
7. Landscape Irrigation System, including Sleeves, shall be paid for under Bid Item 8080001.

EMITTER SCHEDULE - TREES (Number in symbol indicates box size in inches)

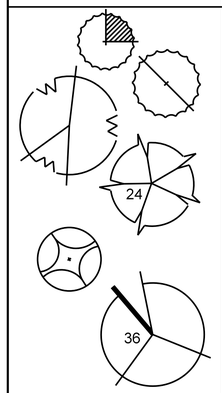

Botanical name / Common name	SIZE	# OF OUTLETS	GPH/ OUTLET	TOTAL GPH
Acacia constricta / Whitethorn Acacia	24" Treepot	3	1	3
Acacia greggii / Catclaw Acacia	24" Treepot	2	2	4
Celtis reticulata / Canyon Hackberry	24" Treepot	3	2	6
Chilopsis linearis / Desert Willow	24" Treepot	3	2	6
	15 Gallon	3	2	6
	24" Box	4	2	8
	36" Box	5	2	10
Prosopis pubescens / Screwbean Mesquite	24" Treepot	3	2	6
	24" Box	4	2	8
Prosopis velutina / Velvet Mesquite	24" Treepot	3	2	6
	24" Box	4	2	8
	36" Box	5	2	10
	48" Box	6	2	12

EMITTER SCHEDULE - SHRUBS

SYMBOL	Botanical name / Common name	SIZE	# OF OUTLETS	GPH/ OUTLET	TOTAL GPH
	Aloysia wrightii / Wright's Beebrush	15" Treepot	2	1	2
	Anisacanthus thurberi / Desert Honeysuckle	15" Treepot	2	1	2
	Atriplex canescens / Four-wing Saltbush	15" Treepot	1	0.5	0.5
	Calliandra eriophylla / Native Fairy Duster	15" Treepot	1	1	1
	Celtis pallida / Desert Hackberry	15" Treepot	2	1	2
	Ericameria laricifolia / Turpentine Bush	15" Treepot	1	0.5	0.5
	Hyptis emoryi / Desert Lavender	15" Treepot	1	1	1
	Larrea tridentata / Creosote	15" Treepot	1	0.5	0.5
	Lycium fremontii / Wolfberry	15" Treepot	1	1	1
	Vauquelinia californica / Arizona Rosewood	15" Treepot	1	1	1
	Viguiera stenolaba / Goldeneye	15" Treepot	1	1	1
	Zizyphus obtusifolia / Graythorn	5 Gallon	1	1	1

EMITTER SCHEDULE - ACCENTS (All 5-Gallon size)

SYMBOL	Botanical name / Common name
	Cylindropuntia leptocaulis / Christmas Cholla
	Cylindropuntia spinosior / Cane Cholla
	Dasylirion wheeleri / Desert Spoon
	Ferocactus wislizenii / Fishhook Barrel
	Fouquieria splendens / Ocotillo (Seed Grown)
	Opuntia basilaris / Beavertail Prickly Pear

SYMBOL	Botanical name / Common name
	Opuntia engelmannii / Engleman's Prickly Pear
	Opuntia violacea var. santa-rita / Purple Prickly Pear
	Yucca baccata / Banana Yucca

NOTE: No emitters on accent plants. All accents to receive irrigation gel system per planting detail.

(PS #) IRRIGATION SLEEVE SCHEDULE

SLEEVE NUMBER	STATION (APPROX)	SIZE & TYPE	LENGTH
1	69+00 LT	4" SCH 40 PVC	7 L.F.
2	70+00 LT	4" SCH 40 PVC	7 L.F.
3	SLEEVE UNDERNEATH SUNSET - REFER TO GN01		
4	SLEEVE AT BRIDGE ABUTMENT - REFER TO GN01		
5	SLEEVE AT BRIDGE ABUTMENT - REFER TO GN01		
6	80+00 LT	4" SCH 40 PVC	8 L.F.
7	SLEEVE UNDERNEATH SUNSET - REFER TO GN01		
8	86+00 LT	4" SCH 40 PVC	8 L.F.
9	SLEEVE UNDERNEATH SUNSET - REFER TO GN01		
10	87+60 LT	4" SCH 40 PVC	8 L.F.
11	88+80 LT	4" SCH 40 PVC	8 L.F.
12	91+40 LT	4" SCH 40 PVC	8 L.F.
13	93+50 LT	4" SCH 40 PVC	8 L.F.
14	SLEEVE UNDERNEATH SUNSET - REFER TO GN01		
15	94+75 LT	4" SCH 40 PVC	14 L.F.
16	95+00 LT	4" SCH 40 PVC	14 L.F.
17	96+75 LT	4" SCH 40 PVC	14 L.F.
18	68+50 RT	4" SCH 40 PVC	68 L.F.
19	69+10 RT	4" SCH 40 PVC	10 L.F.
20	70+00 RT	4" SCH 40 PVC	10 L.F.
21	79+40 RT	4" SCH 40 PVC	10 L.F.
22	80+00 RT	4" SCH 40 PVC	10 L.F.
23	86+00 RT	4" SCH 40 PVC	10 L.F.
24	86+70 RT	4" SCH 40 PVC	6 L.F.
25	87+70 RT	4" SCH 40 PVC	10 L.F.
26	90+35 RT	4" SCH 40 PVC	10 L.F.
27	92+00 RT	4" SCH 40 PVC	6 L.F.
28	93+50 RT	4" SCH 40 PVC	10 L.F.
29	93+85 RT	4" SCH 40 PVC	6 L.F.
30	94+25 RT	4" SCH 40 PVC	14 L.F.
31	97+00 RT	4" SCH 40 PVC	7 L.F.
32	SLEEVE UNDERNEATH DRIVEWAY - REFER TO GN01		

NOTES: 1. Refer to Irrigation Sleeve Schedule, General Notes Sheet GN01, for sleeves crossing beneath roadways and sleeves at bridge abutments.
2. Sleeving is incidental to Bid Item 8080001.

IRRIGATION CONSULTANT:
Carl Kominsky, RLA, ASIC
CARL KOMINSKY LANDSCAPE ARCHITECT, INC.
Tucson, Arizona
Phone: (520) 740-0700
Email: ckominsky@comcast.net

Scale: | Sheet IRS01 of IRS01 | Page 173 of 203

Priscilla S. Cornelio, P.E., Director
Pima County Department of Transportation

Designed	CK	11/15
Drawn	JP	11/15
Checked	LR	11/15
Proj. Engr.	JP	11/15

No.	Revision Description	Engineer	Date

ARCHITECT — CARL S. KOMINSKY — ARIZONA — EXPIRES 6/30/2018

WHEAT DESIGN GROUP — LANDSCAPE ARCHITECTS

Arizona Blue Stake 1-800-STAKE-IT 1-800-782-5348

IRRIGATION SCHEDULES
SUNSET ROAD - SEGMENT I
SILVERBELL RD. TO I-10
PROJECT NO. 4RTSUN

SUNSET ROAD - SILVERBELL ROAD TO I-10 - PROJECT NO. 4RTSUN

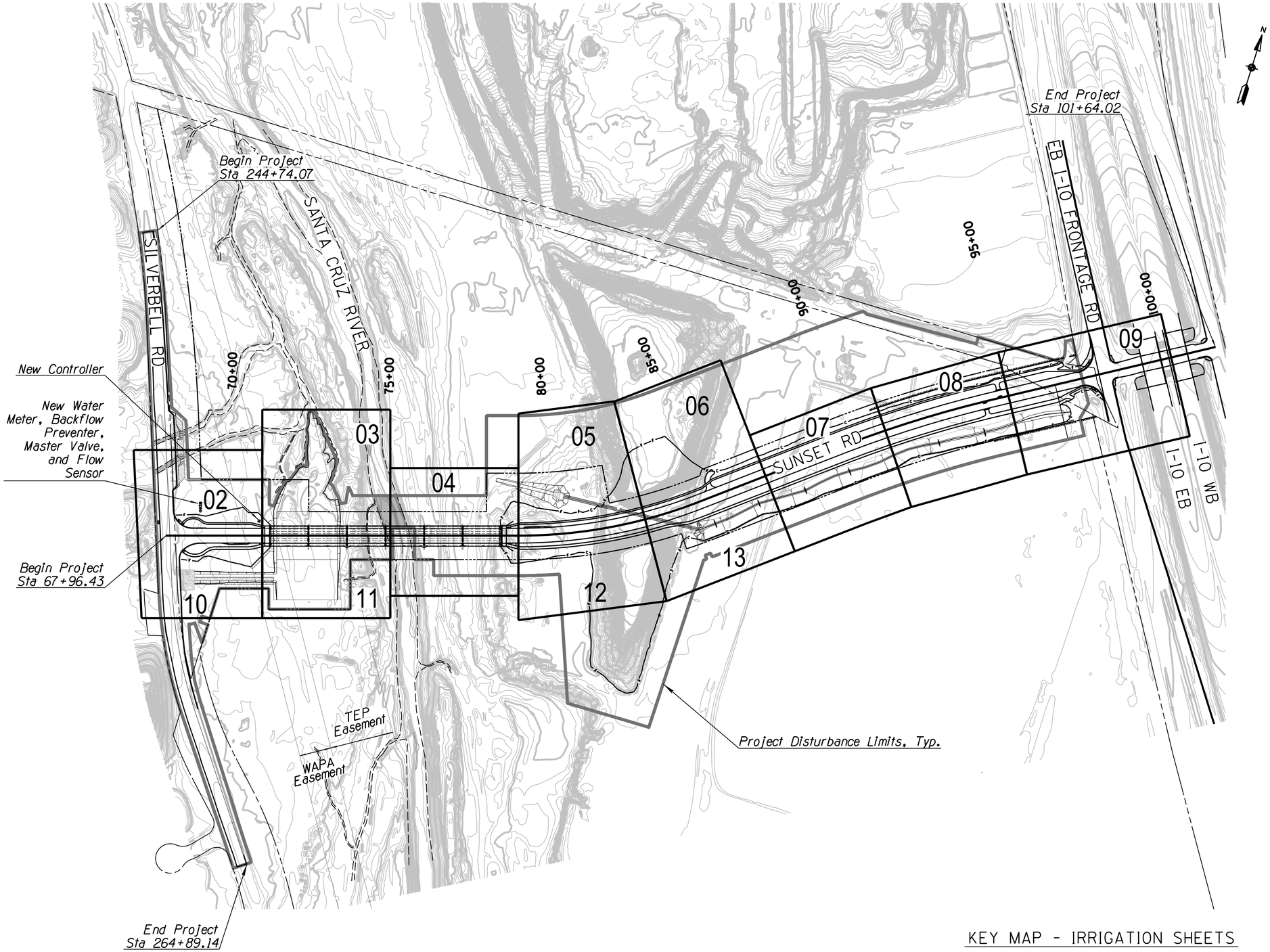

KEY MAP - IRRIGATION SHEETS

80' 0' 80' 160'

Scale:

Sheet IR01 of IR13

Page 174 of 203

Pima County Department of Transportation

Priscilla S. Cornelio, P.E., Director

No.	Revision Description	Engineer	Date

		Date
Designed	CK	11/15
Drawn	JP	11/15
Checked	LR	11/15
Proj. Engr.	JP	11/15

WHEAT DESIGN GROUP
LANDSCAPE ARCHITECTS

Arizona Blue Stake
1-800-STAKE-IT
1-800-782-5348

IRRIGATION KEYMAP

SUNSET ROAD - SEGMENT 1
SILVERBELL RD. TO I-10
PROJECT NO. 4RTSUN

SUNSET ROAD - SILVERBELL ROAD TO I-10 - PROJECT NO. 4RTSUN

FILE NAME: M:\Sunset Rd-Sil to Riv-14902-Data\Sheet Files\4RTSUN_IR01.dgn

DATE: 11/14/2015 TIME: 8:19:15 AM jpatton

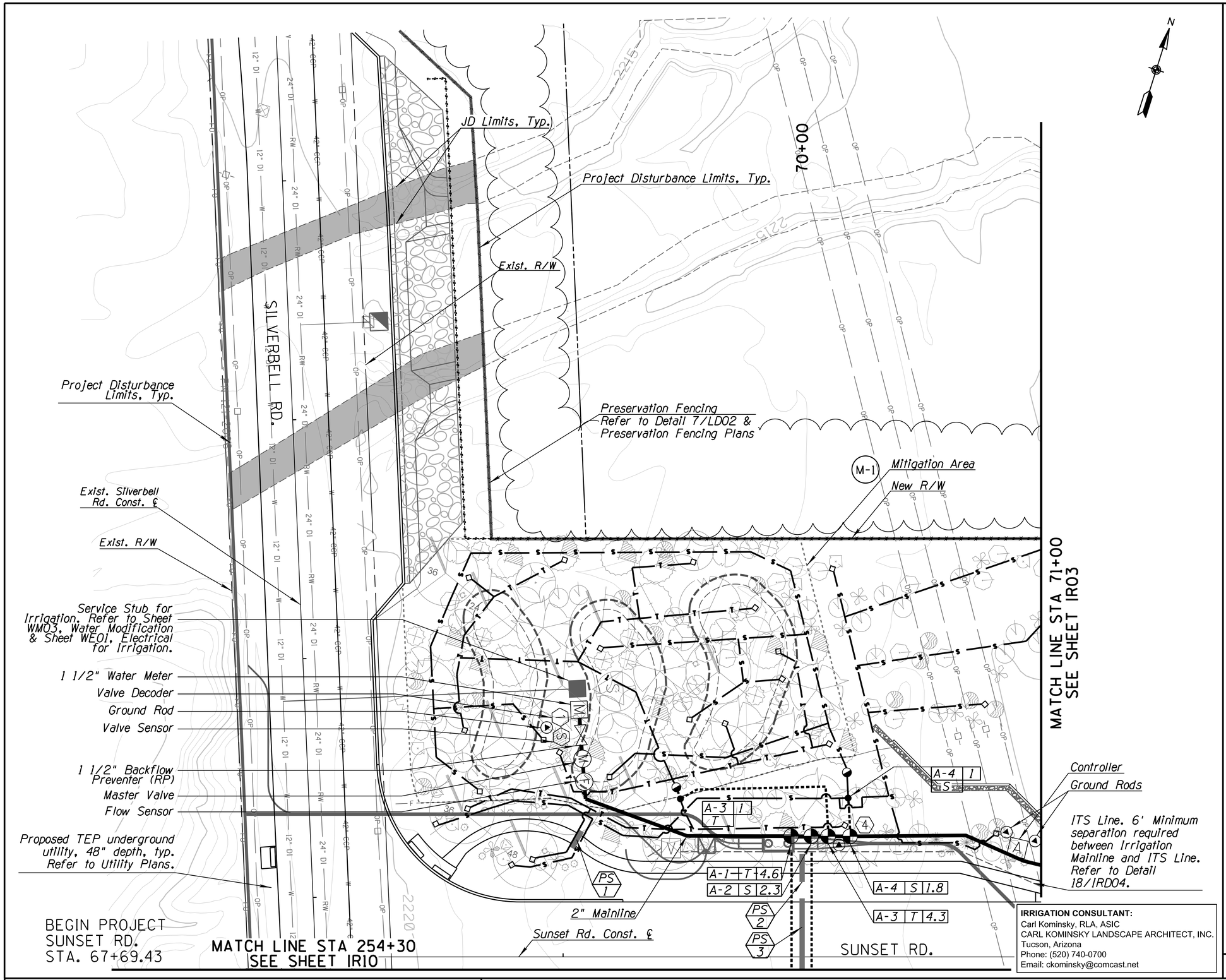

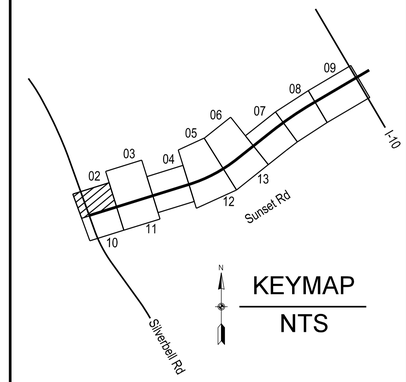

VALVE AND RISER CALLOUTS

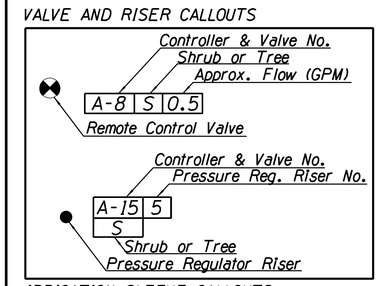

IRRIGATION SLEEVE CALLOUTS

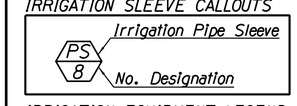

IRRIGATION EQUIPMENT LEGEND

SYMBOL	ITEM
A	Controller A
M	New Water Meter
	R.P. Backflow Preventer
M	Master Valve
F	Flow Sensor
	Control Valve (Remote) (Electric)
	Pressure Regulator Riser
	Mitigation Area Iso. Ball Valve
P	Control Wire Pull Box
4 S	Rainbird Sensor or Valve Decoder 1, 2, 4, 6, or S Device
	Ground Rod w/Lightning Surge Protector
R	Pressure Relief Valve
	Mainline PVC Sch. 40
	Mainline HDPE
	Submain Class Sch 40 PVC
T	Lateral Line Sch 40 PVC (Trees)
S	Lateral Line Sch 40 PVC (Shrub)
	Lateral End Cap Assembly
	Sleeve SCH 40/HDPE PVC

NOTES:
1. Refer to Sheet IRS01 and Special Provisions for Additional Requirements.
2. Refer to Irrigation Sleeve Schedule, Sheet IRS01, and General Notes, Sheet GN01, for Sleeves.

20 0 20 40'

IRRIGATION CONSULTANT:
Carl Kominsky, RLA, ASIC
CARL KOMINSKY LANDSCAPE ARCHITECT, INC.
Tucson, Arizona
Phone: (520) 740-0700
Email: ckominsky@comcast.net

Priscilla S. Cornelio, P.E., Director

		Date
Designed	CK	11/15
Drawn	JP	11/15
Checked	LR	11/15
Proj. Engr.	JP	11/15

No.	Revision Description	Engineer	Date

WHEAT DESIGN GROUP
LANDSCAPE ARCHITECTS

Arizona Blue Stake
1-800-STAKE-IT
1-800-782-5348
CB Lic. Drawing Date Stamp Yes No

Pima County Department of Transportation

IRRIGATION PLAN
STA. 68+27 TO STA. 71+00
SUNSET ROAD - SEGMENT I
SILVERBELL RD. TO I-10
PROJECT NO. 4RTSUN

SUNSET ROAD - SILVERBELL ROAD TO I-10 - PROJECT NO. 4RTSUN

Scale: 1"=20' | Sheet IR02 of IR13 | Page 175 of 203

FILE NAME: M:\Sunset Rd-Sil to Riv-14902-Data\Sheet Files\4RTSUN_IR02.dgn DATE: 11/14/2015 TIME: 8:19:23 AM jpatton

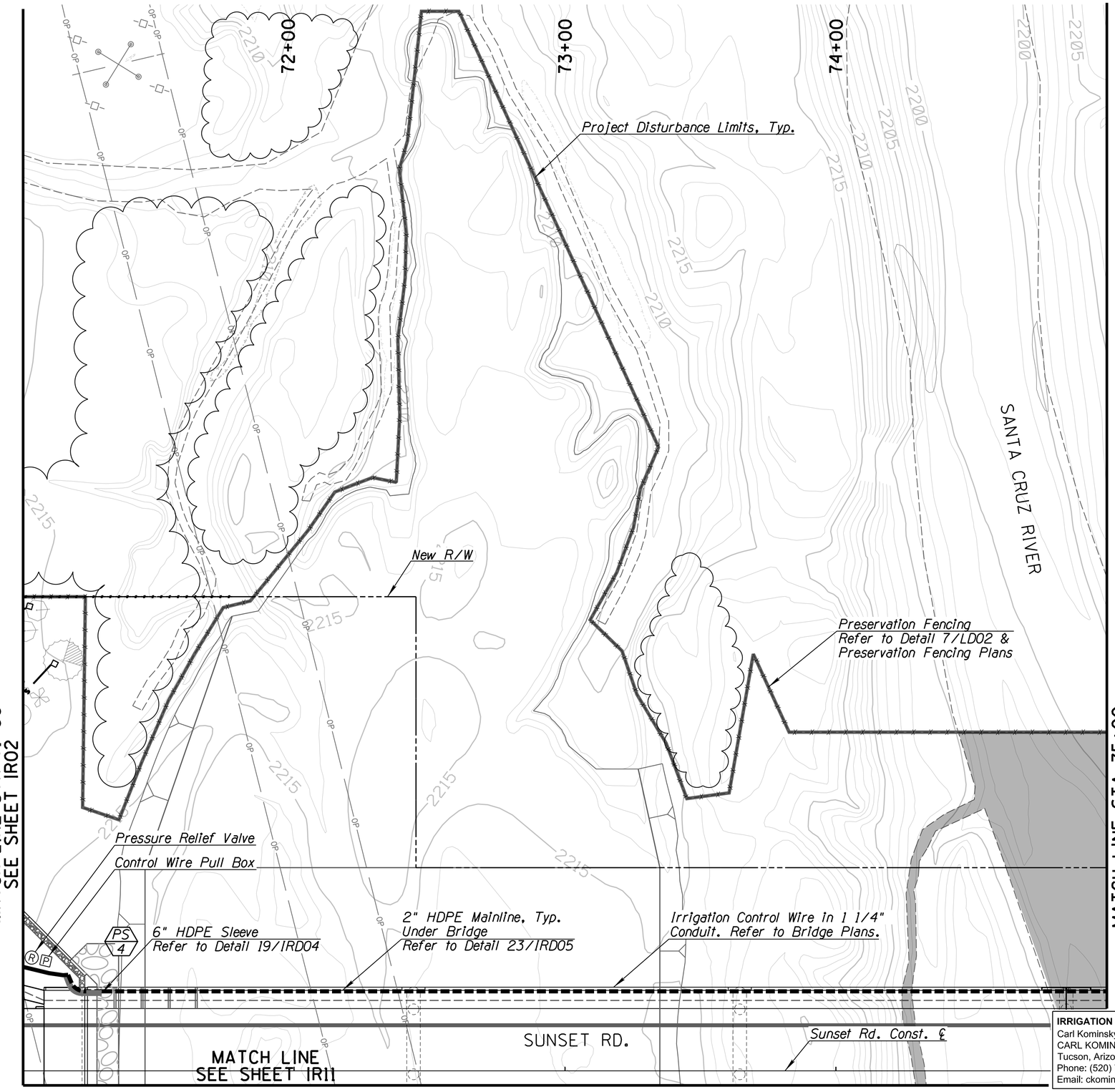

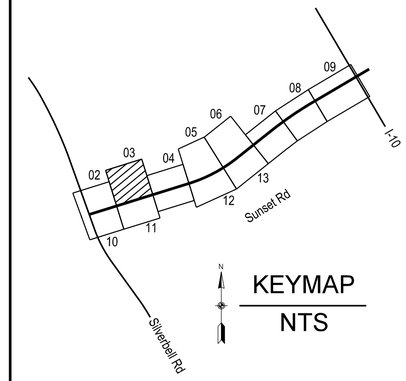

KEYMAP
NTS

VALVE AND RISER CALLOUTS

Controller & Valve No.
Shrub or Tree
Approx. Flow (GPM)
A-8 | S | 0.5
Remote Control Valve

Controller & Valve No.
Pressure Reg. Riser No.
A-15 | 5
S
Shrub or Tree
Pressure Regulator Riser

IRRIGATION SLEEVE CALLOUTS

PS
8
Irrigation Pipe Sleeve
No. Designation

IRRIGATION EQUIPMENT LEGEND

SYMBOL	ITEM
A	Controller A
M	New Water Meter
	R.P. Backflow Preventer
M	Master Valve
F	Flow Sensor
	Control Valve (Remote) (Electric)
	Pressure Regulator Riser
	Mitigation Area Iso. Ball Valve
P	Control Wire Pull Box
4 S	Rainbird Sensor or Valve Decoder 1, 2, 4, 6, or S Device
	Ground Rod w/Lightning Surge Protector
R	Pressure Relief Valve
	Mainline PVC Sch. 40
	Mainline HDPE
	Submain Class Sch 40 PVC
T	Lateral Line Sch 40 PVC (Trees)
S	Lateral Line Sch 40 PVC (Shrub)
	Lateral End Cap Assembly
	Sleeve SCH 40/HDPE PVC

NOTES:
1. Refer to Sheet IRS01 and Special Provisions for Additional Requirements.
2. Refer to Irrigation Sleeve Schedule, Sheet IRS01, and General Notes, Sheet GN01, for Sleeves.

20 0 20 40'

IRRIGATION CONSULTANT:
Carl Kominsky, RLA, ASIC
CARL KOMINSKY LANDSCAPE ARCHITECT, INC.
Tucson, Arizona
Phone: (520) 740-0700
Email: ckominsky@comcast.net

Priscilla S. Cornelio, P.E., Director

Designed	CK	11/15
Drawn	JP	11/15
Checked	LR	11/15
Proj. Engr.	JP	11/15

No.	Revision Description	Engineer	Date

Arizona Blue Stake
1-800-STAKE-IT
1-800-782-5348

WHEAT DESIGN GROUP
LANDSCAPE ARCHITECTS

Pima County Department of Transportation

IRRIGATION PLAN
STA. 71+00 TO STA. 75+00
SUNSET ROAD - SEGMENT I
SILVERBELL RD. TO I-10
PROJECT NO. 4RTSUN

SUNSET ROAD - SILVERBELL ROAD TO I-10 - PROJECT NO. 4RTSUN

Scale: 1" = 20' | Sheet IR03 of IR13 | Page 176 of 203

FILE NAME: M:\Sunset Rd-Sil to Riv-14902-Data\Sheet Files\4RTSUN_IR03.dgn DATE: 11/14/2015 TIME: 8:19:29 AM jpatton

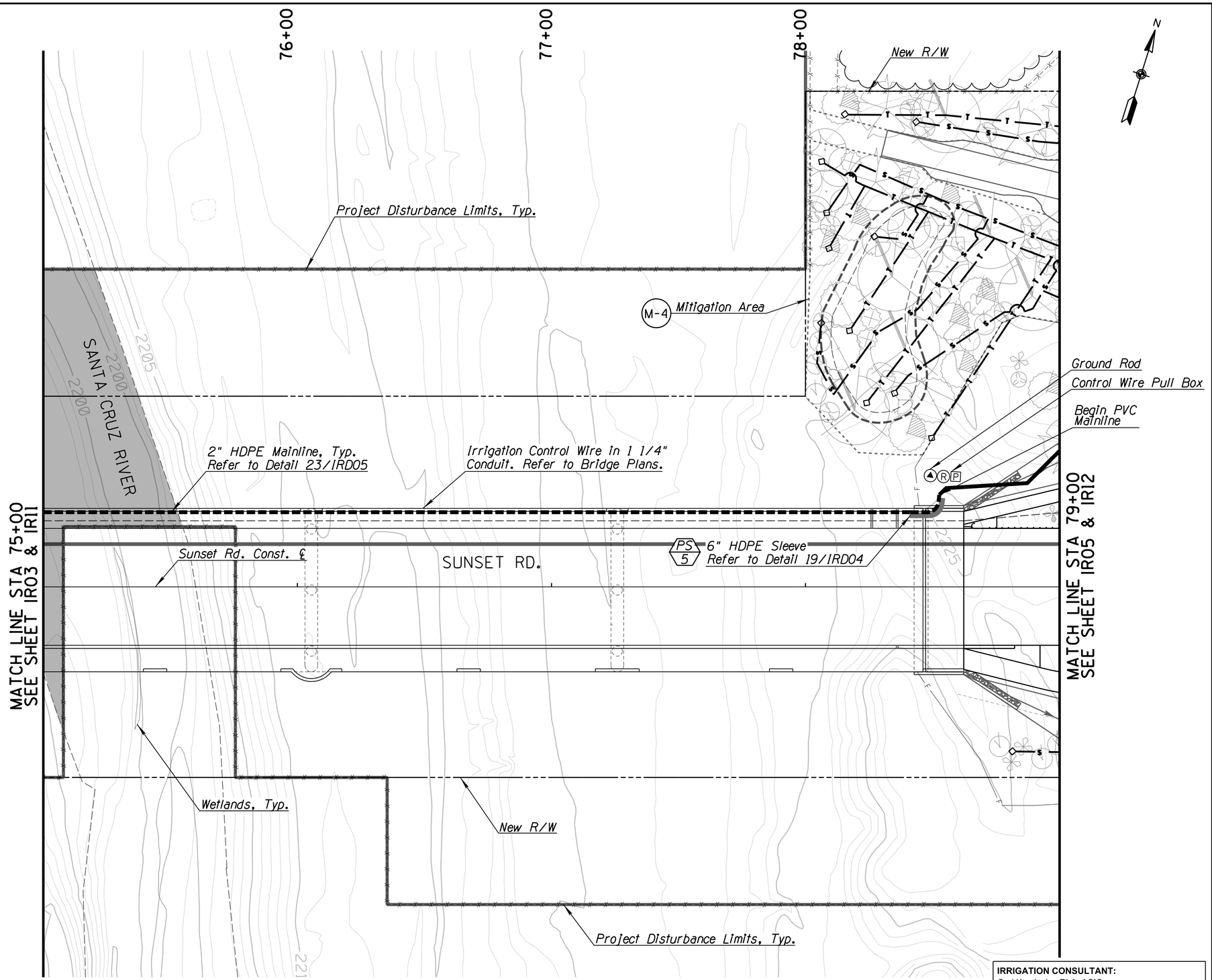

IRRIGATION CONSULTANT:
Carl Kominsky, RLA, ASIC
CARL KOMINSKY LANDSCAPE ARCHITECT, INC.
Tucson, Arizona
Phone: (520) 740-0700
Email: ckominsky@comcast.net

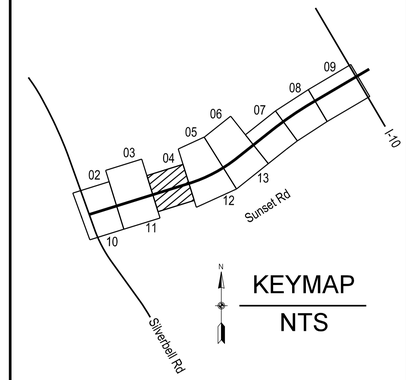

VALVE AND RISER CALLOUTS

Controller & Valve No.
Shrub or Tree
Approx. Flow (GPM)
A-8 | S | 0.5
Remote Control Valve

Controller & Valve No.
Pressure Reg. Riser No.
A-15 | 5
S
Shrub or Tree
Pressure Regulator Riser

IRRIGATION SLEEVE CALLOUTS

PS 8 — Irrigation Pipe Sleeve; No. Designation

IRRIGATION EQUIPMENT LEGEND

SYMBOL	ITEM
A	Controller A
M	New Water Meter
	R.P. Backflow Preventer
M	Master Valve
F	Flow Sensor
	Control Valve (Remote) (Electric)
	Pressure Regulator Riser
	Mitigation Area Iso. Ball Valve
P	Control Wire Pull Box
4 S	Rainbird Sensor or Valve Decoder 1, 2, 4, 6, or S Device
	Ground Rod w/Lightning Surge Protector
R	Pressure Relief Valve
	Mainline PVC Sch. 40
	Mainline HDPE
	Submain Class Sch 40 PVC
T	Lateral Line Sch 40 PVC (Trees)
S	Lateral Line Sch 40 PVC (Shrub)
	Lateral End Cap Assembly
	Sleeve SCH 40/HDPE PVC

NOTES:
1. Refer to Sheet IRS01 and Special Provisions for Additional Requirements.
2. Refer to Irrigation Sleeve Schedule, Sheet IRS01, and General Notes, Sheet GN01, for Sleeves.

20 0 20 40'

Priscilla S. Cornelio, P.E., Director

		Date
Designed	CK	11/15
Drawn	JP	11/15
Checked	LR	11/15
Proj. Engr.	JP	11/15

No.	Revision Description	Engineer	Date

ARCHITECT — CARL S. KOMINSKY — EXPIRES 6/30/2018

WHEAT DESIGN GROUP
LANDSCAPE ARCHITECTS

Arizona Blue Stake
1-800-STAKE-IT
1-800-782-5348
Call two working days before you dig

Pima County Department of Transportation

IRRIGATION PLAN
STA. 75+00 TO STA. 79+00
SUNSET ROAD - SEGMENT 1
SILVERBELL RD. TO I-10
PROJECT NO. 4RTSUN

SUNSET ROAD - SILVERBELL ROAD TO I-10 - PROJECT NO. 4RTSUN

Scale: 1"=20' | Sheet IR04 of IR13 | Page 177 of 203

FILE NAME: M:\Sunset Rd-Sil to Riv-14902-Data\Sheet Files\4RTSUN_IR04.dgn DATE: 11/14/2015 TIME: 8:19:33 AM jpatton

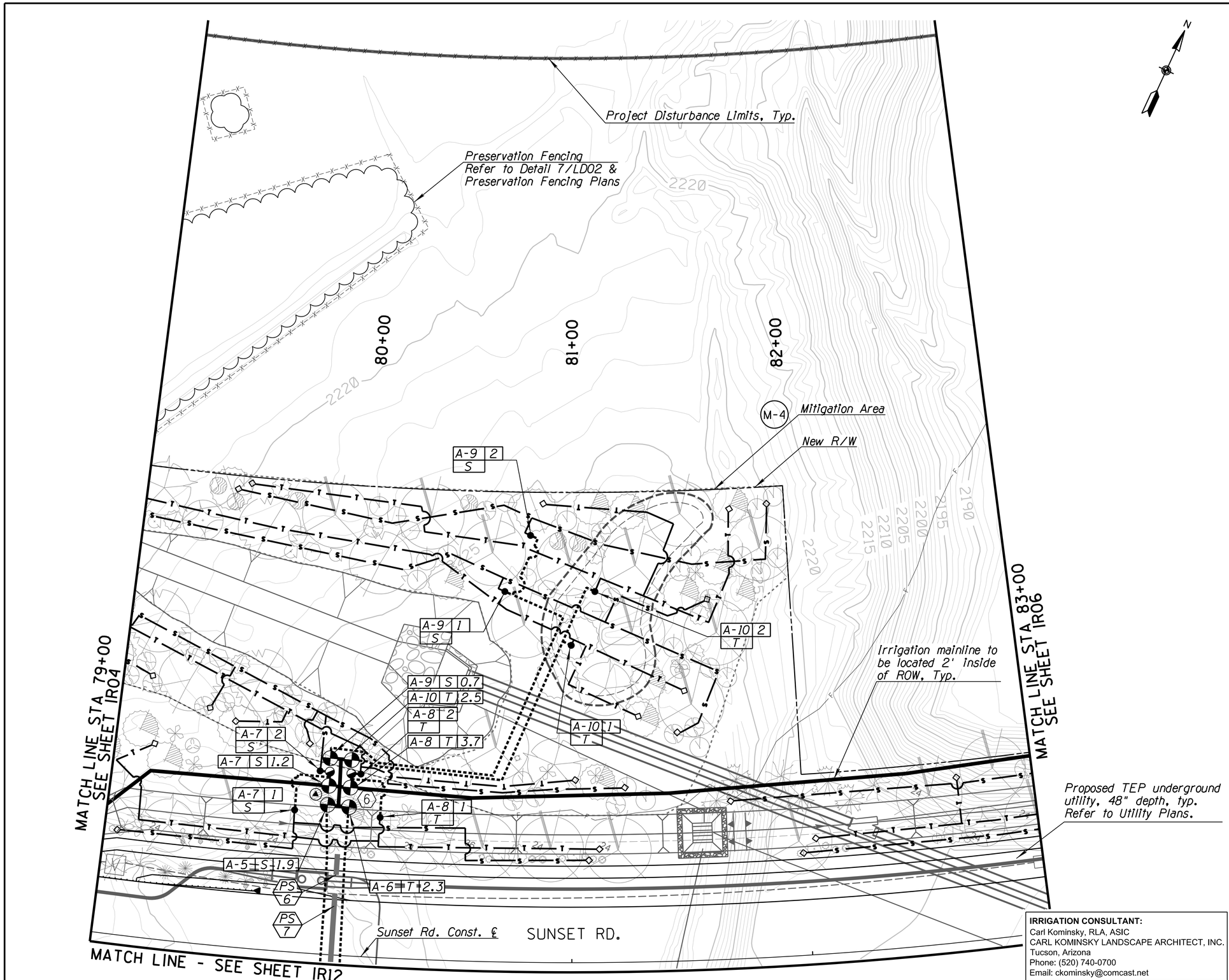

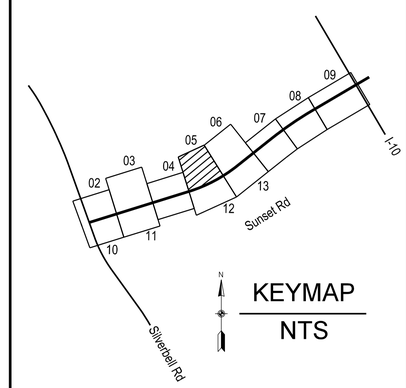

VALVE AND RISER CALLOUTS

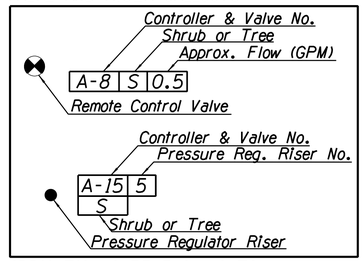

IRRIGATION SLEEVE CALLOUTS

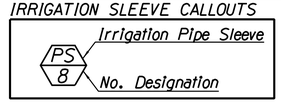

IRRIGATION EQUIPMENT LEGEND

SYMBOL	ITEM
A	Controller A
M	New Water Meter
	R.P. Backflow Preventer
M	Master Valve
F	Flow Sensor
	Control Valve (Remote) (Electric)
	Pressure Regulator Riser
	Mitigation Area Iso. Ball Valve
P	Control Wire Pull Box
4 S	Rainbird Sensor or Valve Decoder 1, 2, 4, 6, or S Device
	Ground Rod w/Lightning Surge Protector
R	Pressure Relief Valve
	Mainline PVC Sch. 40
	Mainline HDPE
	Submain Class Sch 40 PVC
T	Lateral Line Sch 40 PVC (Trees)
S	Lateral Line Sch 40 PVC (Shrub)
	Lateral End Cap Assembly
	Sleeve SCH 40/HDPE PVC

NOTES:
1. Refer to Sheet IRS01 and Special Provisions for Additional Requirements.
2. Refer to Irrigation Sleeve Schedule, Sheet IRS01, and General Notes, Sheet GN01, for Sleeves.

20 0 20 40'

IRRIGATION CONSULTANT:
Carl Kominsky, RLA, ASIC
CARL KOMINSKY LANDSCAPE ARCHITECT, INC.
Tucson, Arizona
Phone: (520) 740-0700
Email: ckominsky@comcast.net

Priscilla S. Cornelio, P.E., Director

Designed	CK	11/15
Drawn	JP	11/15
Checked	LR	11/15
Proj. Engr.	JP	11/15

No.	Revision Description	Engineer	Date

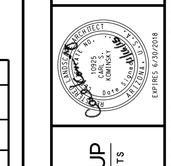

WHEAT DESIGN GROUP
LANDSCAPE ARCHITECTS

Arizona Blue Stake
1-800-STAKE-IT
1-800-782-5348
Call Two Working Days Prior To Dig

Pima County Department of Transportation

IRRIGATION PLAN
STA. 79+00 TO STA. 83+00
SUNSET ROAD - SEGMENT 1
SILVERBELL RD. TO I-10
PROJECT NO. 4RTSUN

SUNSET ROAD - SILVERBELL ROAD TO I-10 - PROJECT NO. 4RTSUN

Scale:	1"=20'	Sheet IR05 of IR13	Page 178 of 203

FILE NAME: M:\Sunset Rd-Sil to Riv-14902-Data\Sheet Files\4RTSUN_IR05.dgn DATE: 11/14/2015 TIME: 8:19:38 AM jpatton

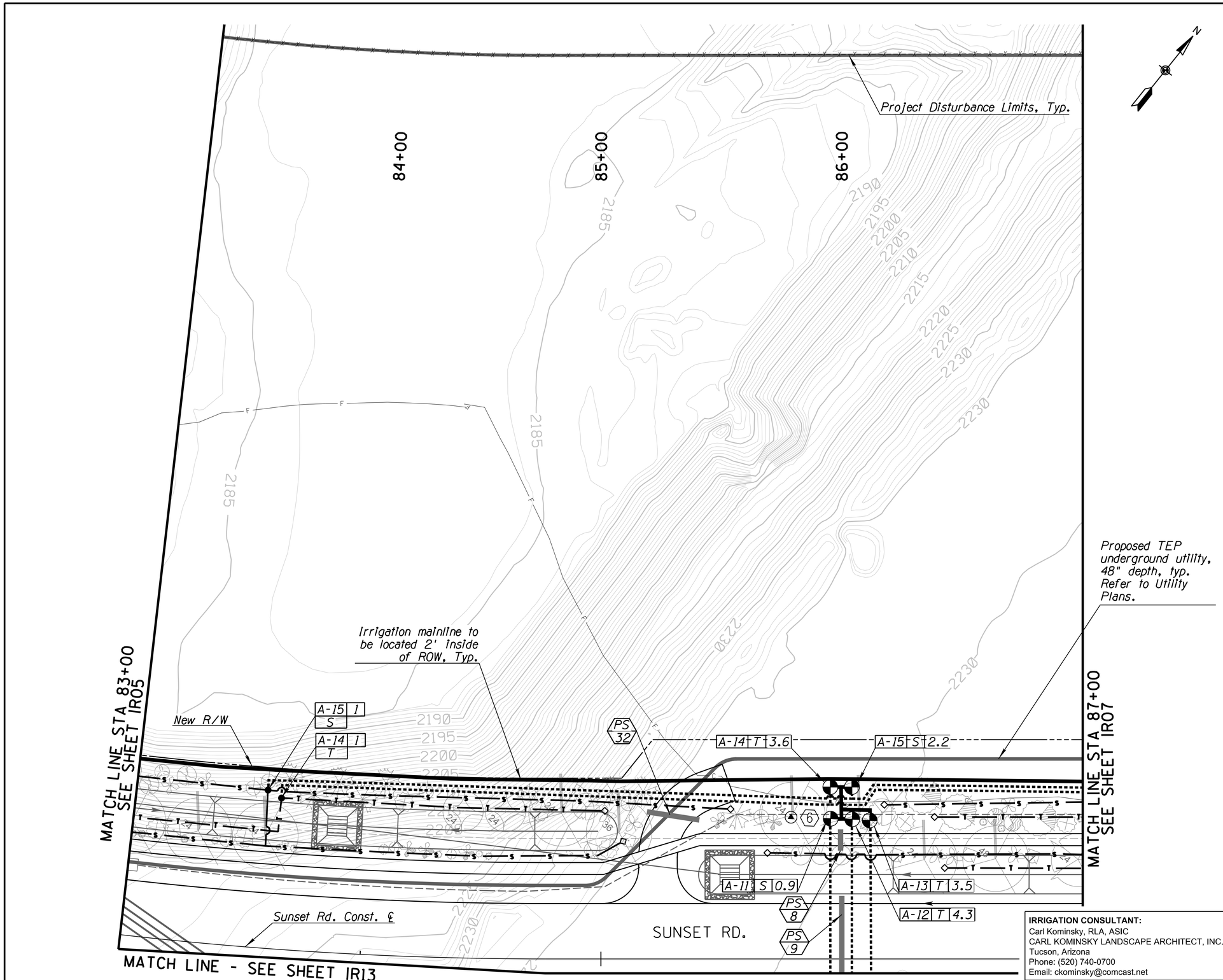

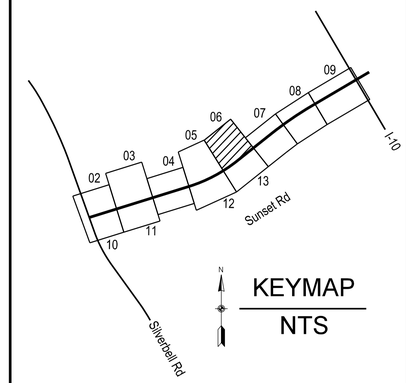

VALVE AND RISER CALLOUTS

Controller & Valve No.
Shrub or Tree
Approx. Flow (GPM)
A-8 | S | 0.5
Remote Control Valve

Controller & Valve No.
Pressure Reg. Riser No.
A-15 | 5
S
Shrub or Tree
Pressure Regulator Riser

IRRIGATION SLEEVE CALLOUTS

PS 8
Irrigation Pipe Sleeve
No. Designation

IRRIGATION EQUIPMENT LEGEND

SYMBOL	ITEM
A	Controller A
M	New Water Meter
	R.P. Backflow Preventer
M	Master Valve
F	Flow Sensor
	Control Valve (Remote) (Electric)
	Pressure Regulator Riser
	Mitigation Area Iso. Ball Valve
P	Control Wire Pull Box
4 S	Rainbird Sensor or Valve Decoder 1, 2, 4, 6, or S Device
	Ground Rod w/Lightning Surge Protector
R	Pressure Relief Valve
	Mainline PVC Sch. 40
	Mainline HDPE
	Submain Class Sch 40 PVC
T	Lateral Line Sch 40 PVC (Trees)
S	Lateral Line Sch 40 PVC (Shrub)
	Lateral End Cap Assembly
	Sleeve SCH 40/HDPE PVC

NOTES:
1. Refer to Sheet IRS01 and Special Provisions for Additional Requirements.
2. Refer to Irrigation Sleeve Schedule, Sheet IRS01, and General Notes, Sheet GN01, for Sleeves.

20 0 20 40'

IRRIGATION CONSULTANT:
Carl Kominsky, RLA, ASIC
CARL KOMINSKY LANDSCAPE ARCHITECT, INC.
Tucson, Arizona
Phone: (520) 740-0700
Email: ckominsky@comcast.net

Priscilla S. Cornelio, P.E., Director

		Date
Designed	CK	11/15
Drawn	JP	11/15
Checked	LR	11/15
Proj. Engr.	JP	11/15

No.	Revision Description	Engineer	Date

WHEAT DESIGN GROUP
LANDSCAPE ARCHITECTS

Arizona Blue Stake
1-800-STAKE-IT
1-800-782-5348

Pima County Department of Transportation

IRRIGATION PLAN
STA. 83+00 TO STA. 87+00
SUNSET ROAD - SEGMENT 1
SILVERBELL RD. TO I-10
PROJECT NO. 4RTSUN

SUNSET ROAD - SILVERBELL ROAD TO I-10 - PROJECT NO. 4RTSUN

Scale: 1"=20' | Sheet IR06 of IR13

FILE NAME: M:\Sunset Rd-S1l to R1v-14902-Data\Sheet Files\4RTSUN_IR06.dgn DATE: 11/14/2015 TIME: 8:19:43 AM jpatton

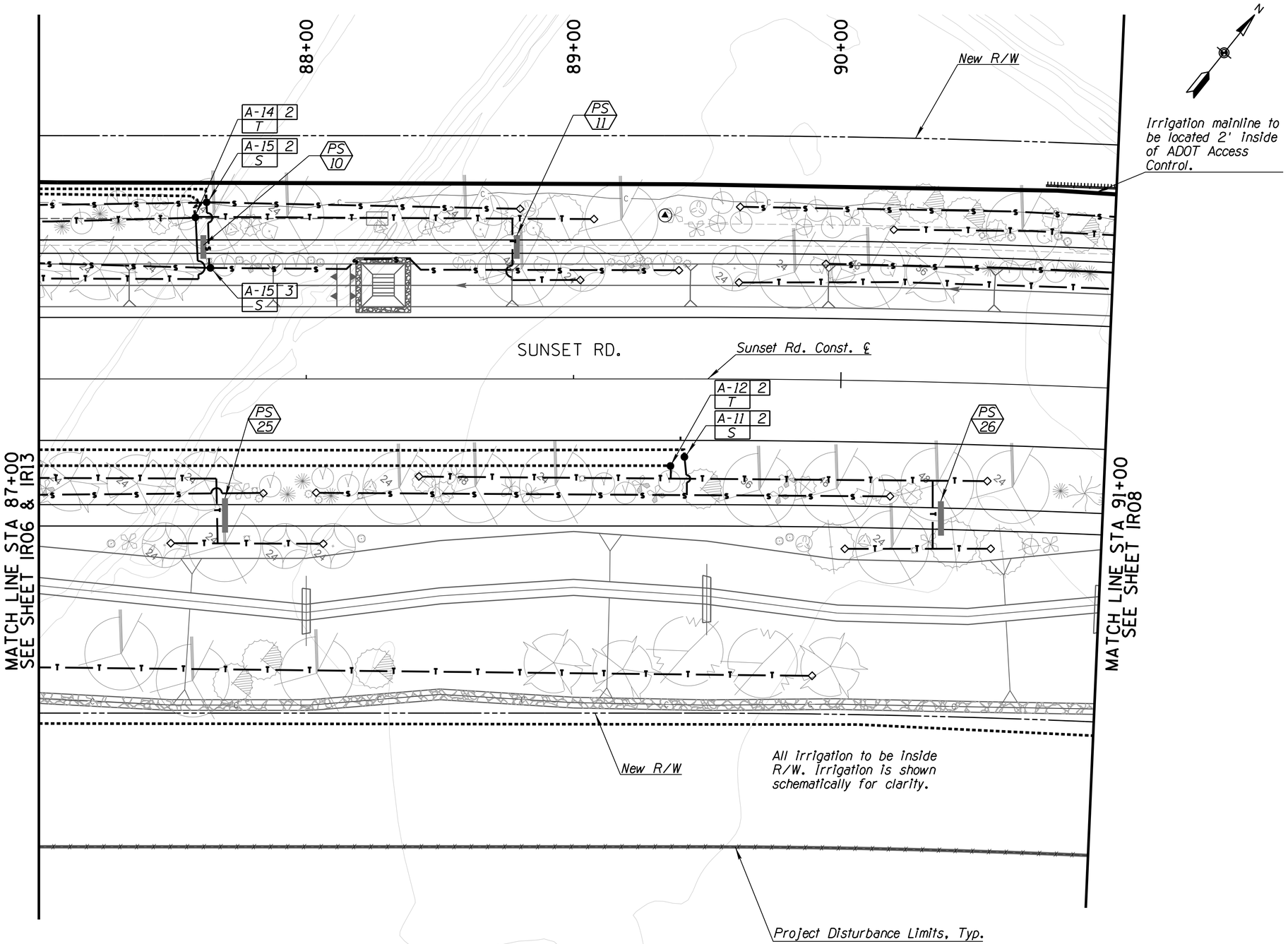

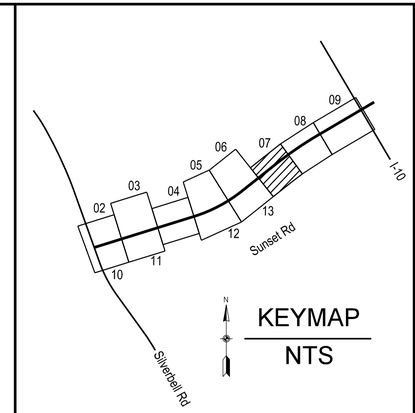

KEYMAP
NTS

VALVE AND RISER CALLOUTS

Controller & Valve No.
Shrub or Tree
Approx. Flow (GPM)
A-8 | S | 0.5
Remote Control Valve

Controller & Valve No.
Pressure Reg. Riser No.
A-15 | 5
S
Shrub or Tree
Pressure Regulator Riser

IRRIGATION SLEEVE CALLOUTS

Irrigation Pipe Sleeve
PS 8
No. Designation

IRRIGATION EQUIPMENT LEGEND

SYMBOL	ITEM
A	Controller A
M	New Water Meter
	R.P. Backflow Preventer
M	Master Valve
F	Flow Sensor
	Control Valve (Remote) (Electric)
	Pressure Regulator Riser
	Mitigation Area Iso. Ball Valve
P	Control Wire Pull Box
4 S	Rainbird Sensor or Valve Decoder 1, 2, 4, 6, or S Device
	Ground Rod w/Lightning Surge Protector
R	Pressure Relief Valve
	Mainline PVC Sch. 40
	Mainline HDPE
	Submain Class Sch 40 PVC
T	Lateral Line Sch 40 PVC (Trees)
S	Lateral Line Sch 40 PVC (Shrub)
	Lateral End Cap Assembly
	Sleeve SCH 40/HDPE PVC

NOTES:
1. Refer to Sheet IRS01 and Special Provisions for Additional Requirements.
2. Refer to Irrigation Sleeve Schedule, Sheet IRS01, and General Notes, Sheet GN01, for Sleeves.

20 0 20 40'

IRRIGATION CONSULTANT:
Carl Kominsky, RLA, ASIC
CARL KOMINSKY LANDSCAPE ARCHITECT, INC.
Tucson, Arizona
Phone: (520) 740-0700
Email: ckominsky@comcast.net

Priscilla S. Cornelio, P.E., Director

		Date
Designed	CK	11/15
Drawn	JP	11/15
Checked	LR	11/15
Proj. Engr.	JP	11/15

No.	Revision Description	Engineer	Date

WHEAT DESIGN GROUP
LANDSCAPE ARCHITECTS

Arizona Blue Stake
1-800-STAKE-IT
Call two working days before you dig

Pima County Department of Transportation

IRRIGATION PLAN
STA. 87+00 TO STA. 91+00
SUNSET ROAD - SEGMENT 1
SILVERBELL RD. TO I-10
PROJECT NO. 4RTSUN

SUNSET ROAD - SILVERBELL ROAD TO I-10 - PROJECT NO. 4RTSUN

Scale: 1" = 20' | Sheet IR07 of IR13 | Page 180 of 203

FILE NAME: M:\Sunset Rd-Sil to Riv-14902-Data\Sheet Files\4RTSUN_IR07.dgn DATE: 11/14/2015 TIME: 8:19:47 AM jpatton

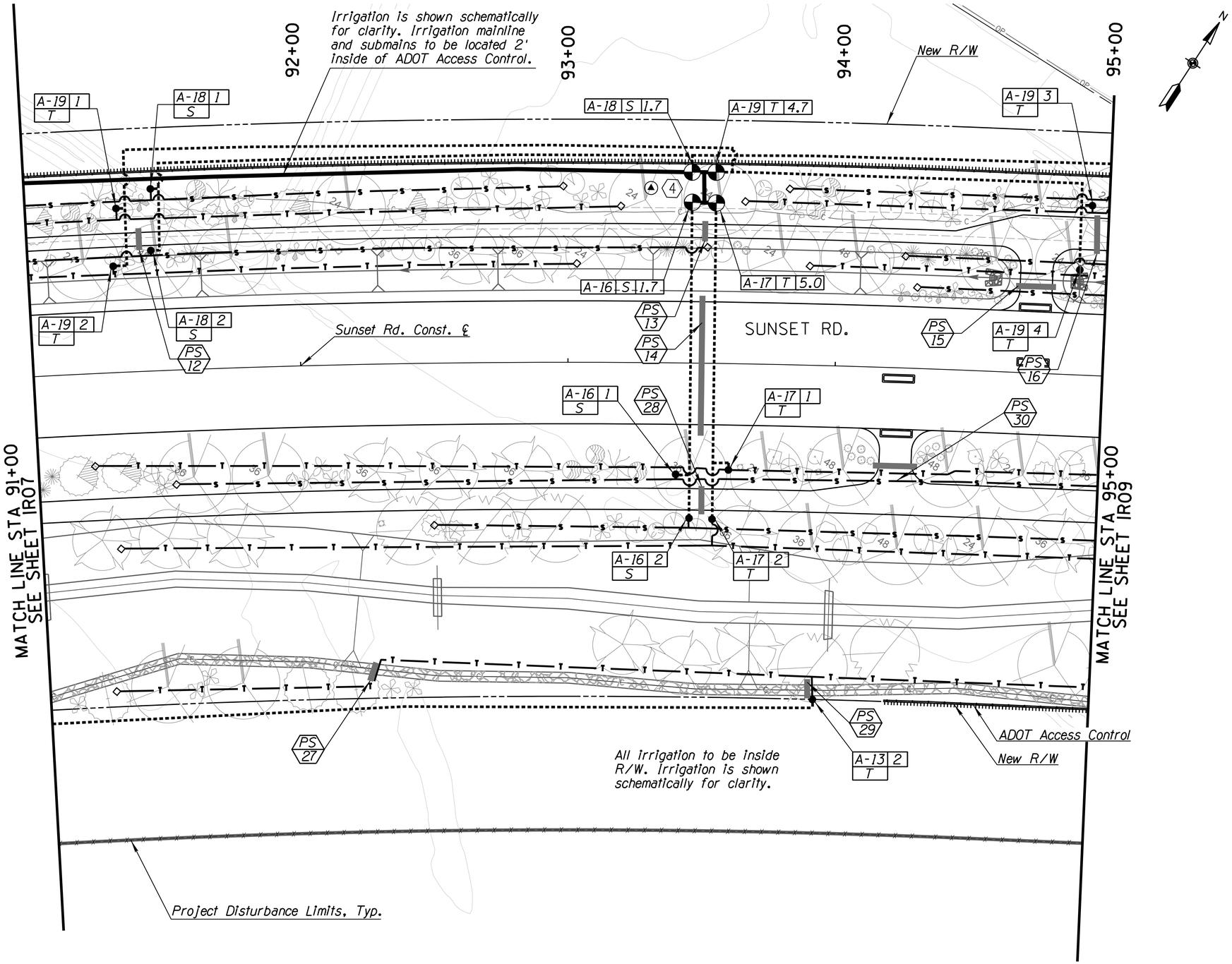

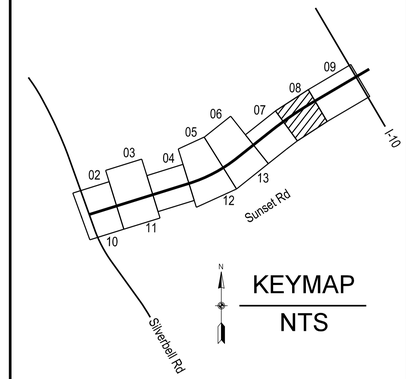

KEYMAP
NTS

VALVE AND RISER CALLOUTS

Controller & Valve No.
Shrub or Tree
Approx. Flow (GPM)
A-8 S 0.5
Remote Control Valve

Controller & Valve No.
Pressure Reg. Riser No.
A-15 5 S
Shrub or Tree
Pressure Regulator Riser

IRRIGATION SLEEVE CALLOUTS

PS 8
Irrigation Pipe Sleeve
No. Designation

IRRIGATION EQUIPMENT LEGEND

SYMBOL	ITEM
A	Controller A
M	New Water Meter
	R.P. Backflow Preventer
M	Master Valve
F	Flow Sensor
	Control Valve (Remote) (Electric)
	Pressure Regulator Riser
	Mitigation Area Iso. Ball Valve
P	Control Wire Pull Box
4 S	Rainbird Sensor or Valve Decoder 1, 2, 4, 6, or S Device
	Ground Rod w/Lightning Surge Protector
R	Pressure Relief Valve
	Mainline PVC Sch. 40
	Mainline HDPE
	Submain Class Sch 40 PVC
T	Lateral Line Sch 40 PVC (Trees)
S	Lateral Line Sch 40 PVC (Shrub)
	Lateral End Cap Assembly
	Sleeve SCH 40/HDPE PVC

NOTES:
1. Refer to Sheet IRS01 and Special Provisions for Additional Requirements.
2. Refer to Irrigation Sleeve Schedule, Sheet IRS01, and General Notes, Sheet GN01, for Sleeves.

20 0 20 40'

IRRIGATION CONSULTANT:
Carl Kominsky, RLA, ASIC
CARL KOMINSKY LANDSCAPE ARCHITECT, INC.
Tucson, Arizona
Phone: (520) 740-0700
Email: ckominsky@comcast.net

Scale: 1"=20' | Sheet IR08 of IR13 | Page 181 of 203

Pima County Department of Transportation
Priscilla S. Cornelio, P.E., Director

No.	Revision Description	Engineer	Date

		Date
Designed	CK	11/15
Drawn	JP	11/15
Checked	LR	11/15
Proj. Engr.	JP	11/15

EXPIRES 6/30/2018

WHEAT DESIGN GROUP
LANDSCAPE ARCHITECTS

Arizona Blue Stake
1-800-STAKE-IT
1-800-782-5348
Call Two Working Days Before You Dig

IRRIGATION PLAN
STA. 91+00 TO STA. 95+00
SUNSET ROAD - SEGMENT 1
SILVERBELL RD. TO I-10
PROJECT NO. 4RTSUN

SUNSET ROAD - SILVERBELL ROAD TO I-10 - PROJECT NO. 4RTSUN

FILE NAME: M:\Sunset Rd-Sil to Riv-14902-Data\Sheet Files\4RTSUN_IR08.dgn DATE: 11/14/2015 TIME: 8:19:52 AM jpatton

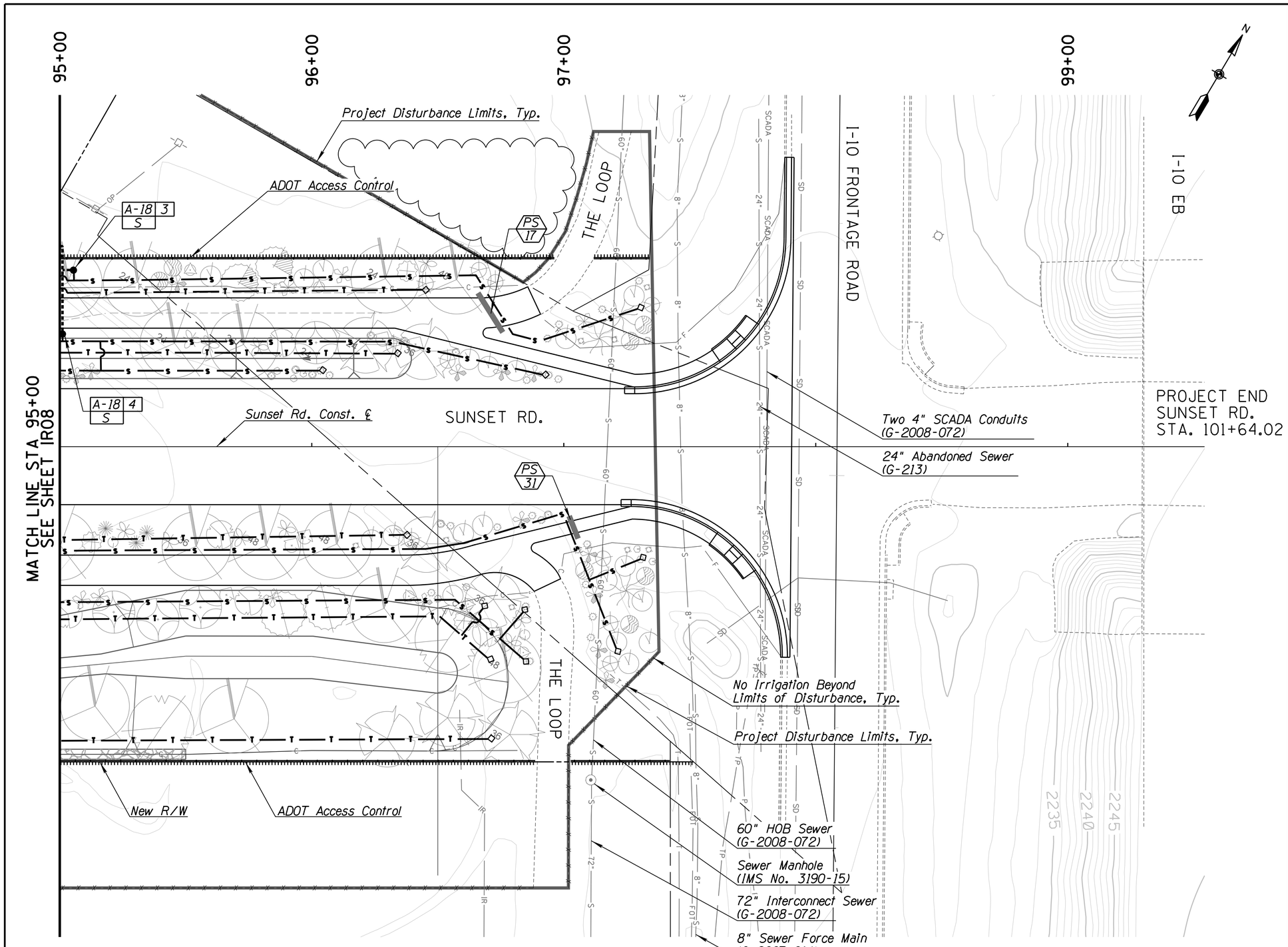

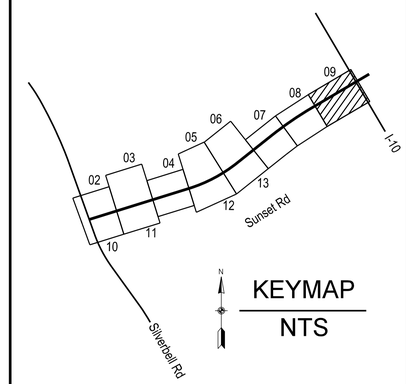

VALVE AND RISER CALLOUTS

Controller & Valve No.
Shrub or Tree
Approx. Flow (GPM)
A-8 | S | 0.5
Remote Control Valve

Controller & Valve No.
Pressure Reg. Riser No.
A-15 | 5
S
Shrub or Tree
Pressure Regulator Riser

IRRIGATION SLEEVE CALLOUTS

PS 8
Irrigation Pipe Sleeve
No. Designation

IRRIGATION EQUIPMENT LEGEND

SYMBOL	ITEM
A	Controller A
M	New Water Meter
	R.P. Backflow Preventer
M	Master Valve
F	Flow Sensor
	Control Valve (Remote) (Electric)
	Pressure Regulator Riser
	Mitigation Area Iso. Ball Valve
P	Control Wire Pull Box
4 S	Rainbird Sensor or Valve Decoder 1, 2, 4, 6, or S Device
	Ground Rod w/Lightning Surge Protector
R	Pressure Relief Valve
	Mainline PVC Sch. 40
	Mainline HDPE
	Submain Class Sch 40 PVC
T	Lateral Line Sch 40 PVC (Trees)
S	Lateral Line Sch 40 PVC (Shrub)
	Lateral End Cap Assembly
	Sleeve SCH 40/HDPE PVC

NOTES:
1. Refer to Sheet IR501 and Special Provisions for Additional Requirements.
2. Refer to Irrigation Sleeve Schedule, Sheet IR501, and General Notes, Sheet GN01, for Sleeves.

20 0 20 40'

IRRIGATION CONSULTANT:
Carl Kominsky, RLA, ASIC
CARL KOMINSKY LANDSCAPE ARCHITECT, INC.
Tucson, Arizona
Phone: (520) 740-0700
Email: ckominsky@comcast.net

Priscilla S. Cornelio, P.E., Director

Designed	CK	11/15
Drawn	JP	11/15
Checked	LR	11/15
Proj. Engr.	JP	11/15

No.	Revision Description	Engineer	Date

EXPIRES 6/30/2018

WHEAT DESIGN GROUP
LANDSCAPE ARCHITECTS

Arizona Blue Stake
1-800-STAKE-IT
1-800-782-5348

Pima County Department of Transportation

IRRIGATION PLAN
STA. 95+00 TO STA. 99+00
SUNSET ROAD - SEGMENT 1
SILVERBELL RD. TO I-10
PROJECT NO. 4RTSUN

SUNSET ROAD - SILVERBELL ROAD TO I-10 - PROJECT NO. 4RTSUN

Scale:	1" = 20'	Sheet IR09 of IR13	Page 182 of 203

FILE NAME: M:\Sunset Rd-Sil to Riv-14902-Data\Sheet Files\4RTSUN_IR09.dgn DATE: 11/14/2015 TIME: 8:19:57 AM jpatton

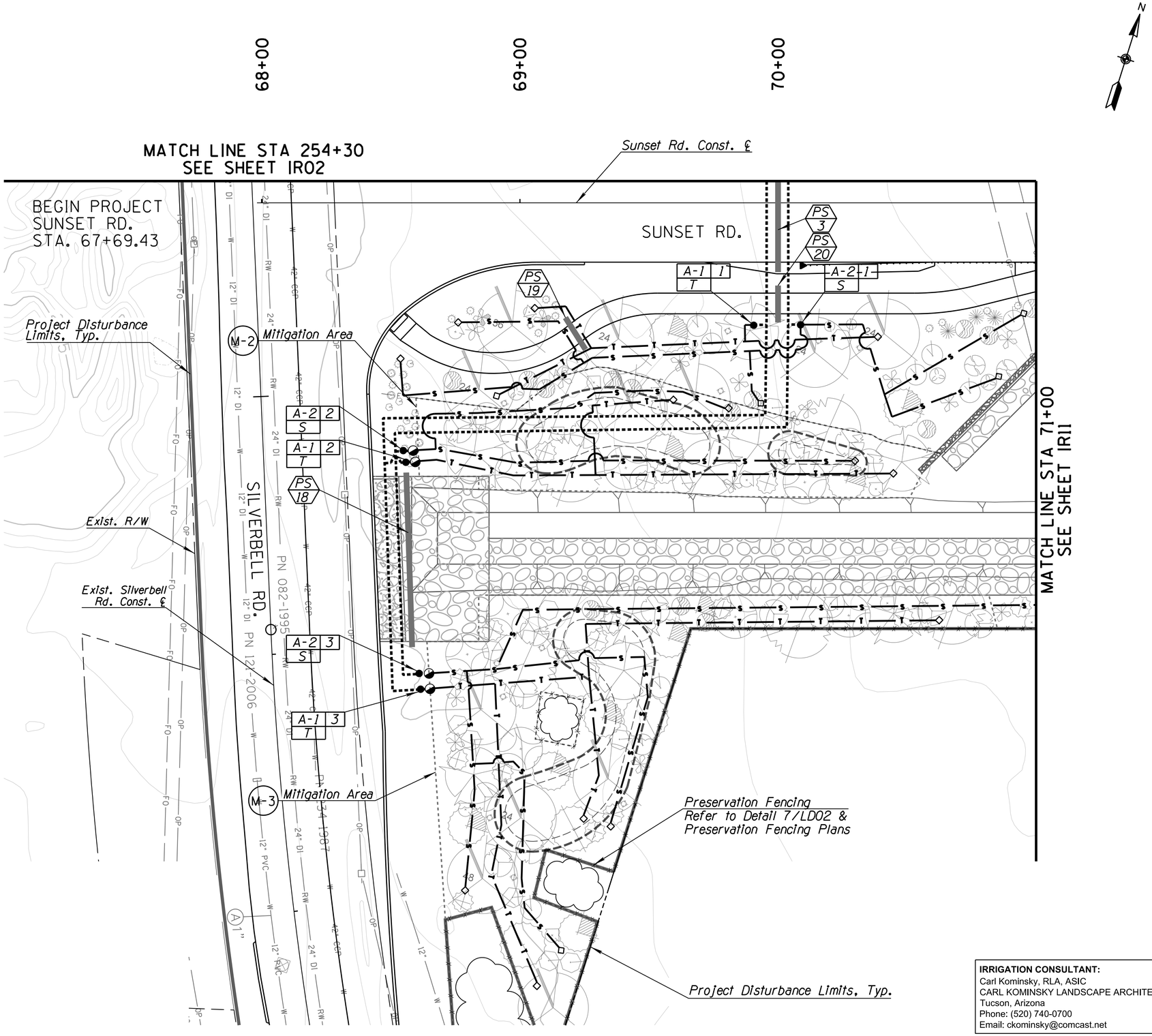

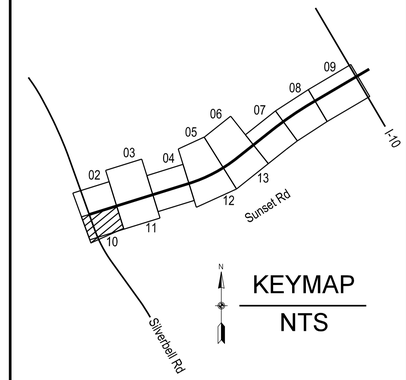

VALVE AND RISER CALLOUTS

Controller & Valve No.
Shrub or Tree
Approx. Flow (GPM)
A-8 | S | 0.5
Remote Control Valve

Controller & Valve No.
Pressure Reg. Riser No.
A-15 | 5
S
Shrub or Tree
Pressure Regulator Riser

IRRIGATION SLEEVE CALLOUTS

PS 8
Irrigation Pipe Sleeve
No. Designation

IRRIGATION EQUIPMENT LEGEND

SYMBOL	ITEM
A	Controller A
M	New Water Meter
	R.P. Backflow Preventer
M	Master Valve
F	Flow Sensor
	Control Valve (Remote) (Electric)
	Pressure Regulator Riser
	Mitigation Area Iso. Ball Valve
P	Control Wire Pull Box
4 S	Rainbird Sensor or Valve Decoder 1, 2, 4, 6, or S Device
	Ground Rod w/Lightning Surge Protector
R	Pressure Relief Valve
	Mainline PVC Sch. 40
	Mainline HDPE
	Submain Class Sch 40 PVC
T	Lateral Line Sch 40 PVC (Trees)
S	Lateral Line Sch 40 PVC (Shrub)
	Lateral End Cap Assembly
	Sleeve SCH 40/HDPE PVC

NOTES:
1. Refer to Sheet IRS01 and Special Provisions for Additional Requirements.
2. Refer to Irrigation Sleeve Schedule, Sheet IRS01, and General Notes, Sheet GN01, for Sleeves.

20 0 20 40'

IRRIGATION CONSULTANT:
Carl Kominsky, RLA, ASIC
CARL KOMINSKY LANDSCAPE ARCHITECT, INC.
Tucson, Arizona
Phone: (520) 740-0700
Email: ckominsky@comcast.net

Priscilla S. Cornelio, P.E., Director

		Date
Designed	CK	11/15
Drawn	JP	11/15
Checked	LR	11/15
Proj. Engr.	JP	11/15

No.	Revision Description	Engineer	Date

WHEAT DESIGN GROUP
LANDSCAPE ARCHITECTS

Arizona Blue Stake
1-800-STAKE-IT
1-800-782-5348

Pima County Department of Transportation

IRRIGATION PLAN
STA. 68+27 TO STA. 71+00
SUNSET ROAD - SEGMENT I
SILVERBELL RD. TO I-10
PROJECT NO. 4RTSUN

SUNSET ROAD - SILVERBELL ROAD TO I-10 - PROJECT NO. 4RTSUN

Scale: 1" = 20' | Sheet IR10 of IR13 | Page 183 of 203

FILE NAME: M:\Sunset Rd-Sil to Riv-14902-Data\Sheet Files\4RTSUN_IR10.dgn DATE: 11/14/2015 TIME: 8:20:01 AM jpatton

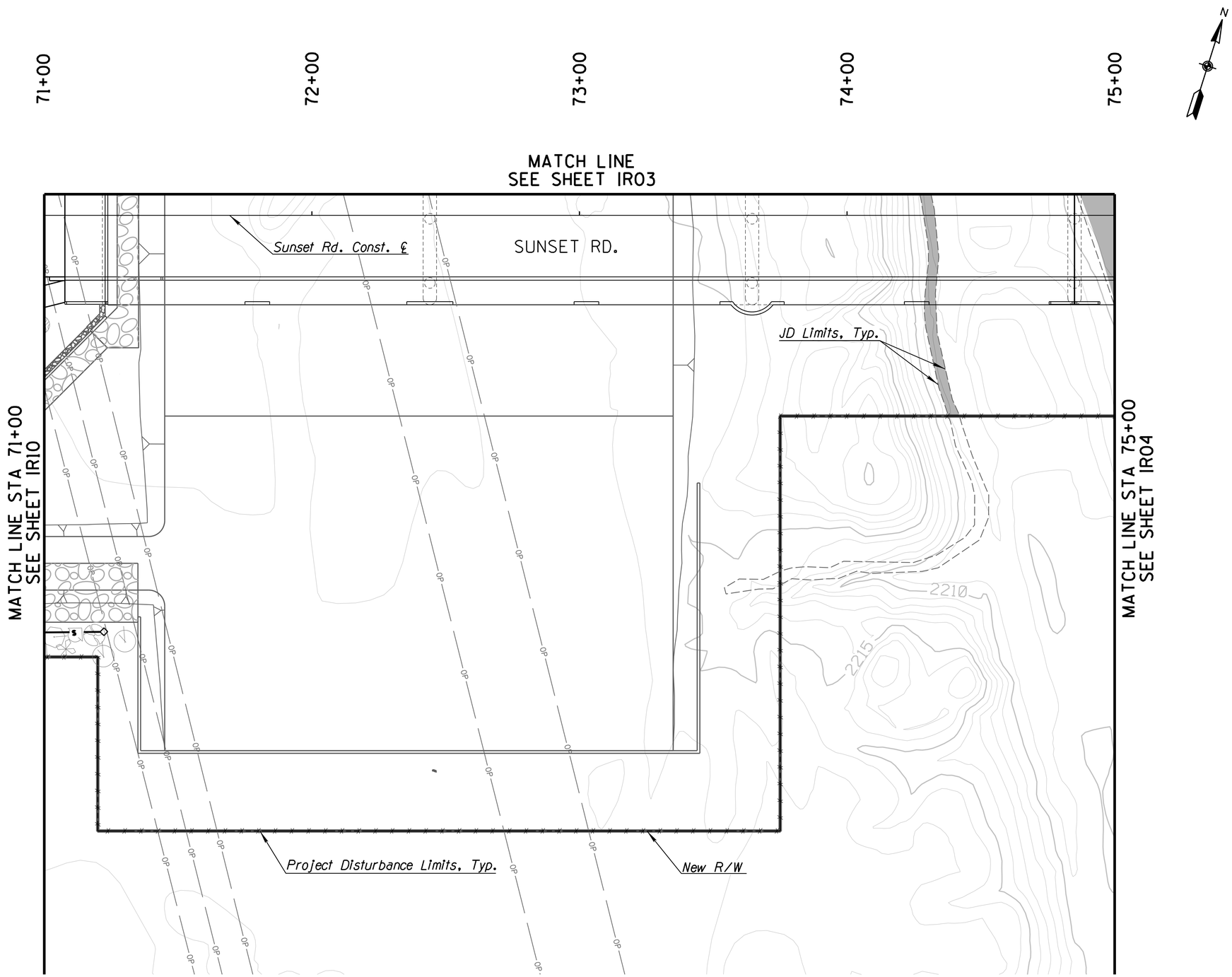

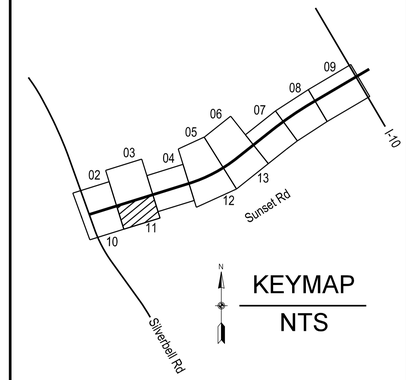

KEYMAP
NTS

VALVE AND RISER CALLOUTS

Controller & Valve No.
Shrub or Tree
Approx. Flow (GPM)
A-8 | S | 0.5
Remote Control Valve

Controller & Valve No.
Pressure Reg. Riser No.
A-15 | 5
S
Shrub or Tree
Pressure Regulator Riser

IRRIGATION SLEEVE CALLOUTS

PS
8
Irrigation Pipe Sleeve
No. Designation

IRRIGATION EQUIPMENT LEGEND

SYMBOL	ITEM
A	Controller A
M	New Water Meter
	R.P. Backflow Preventer
M	Master Valve
F	Flow Sensor
	Control Valve (Remote) (Electric)
	Pressure Regulator Riser
	Mitigation Area Iso. Ball Valve
P	Control Wire Pull Box
4 S	Rainbird Sensor or Valve Decoder 1, 2, 4, 6, or S Device
	Ground Rod w/Lightning Surge Protector
R	Pressure Relief Valve
	Mainline PVC Sch. 40
	Mainline HDPE
	Submain Class Sch 40 PVC
T	Lateral Line Sch 40 PVC (Trees)
S	Lateral Line Sch 40 PVC (Shrub)
	Lateral End Cap Assembly
	Sleeve SCH 40/HDPE PVC

NOTES:
1. Refer to Sheet IRS01 and Special Provisions for Additional Requirements.
2. Refer to Irrigation Sleeve Schedule, Sheet IRS01, and General Notes, Sheet GN01, for Sleeves.

20 0 20 40'

IRRIGATION CONSULTANT:
Carl Kominsky, RLA, ASIC
CARL KOMINSKY LANDSCAPE ARCHITECT, INC.
Tucson, Arizona
Phone: (520) 740-0700
Email: ckominsky@comcast.net

Priscilla S. Cornelio, P.E., Director

		Date
Designed	CK	11/15
Drawn	JP	11/15
Checked	LR	11/15
Proj. Engr.	JP	11/15

No.	Revision Description	Engineer	Date

WHEAT DESIGN GROUP
LANDSCAPE ARCHITECTS

Arizona Blue Stake
1-800-STAKE-IT
1-800-782-5348

Pima County Department of Transportation

IRRIGATION PLAN
STA. 71+00 TO STA. 75+00
SUNSET ROAD - SEGMENT I
SILVERBELL RD. TO I-10
PROJECT NO. 4RTSUN

SUNSET ROAD - SILVERBELL ROAD TO I-10 - PROJECT NO. 4RTSUN

Scale: 1"=20' | Sheet IR11 of IR13 | Page 184 of 203

FILE NAME: M:\Sunset Rd-Sil to Riv-14902-Data\Sheet Files\4RTSUN_IR11.dgn DATE: 11/14/2015 TIME: 8:20:06 AM jpatton

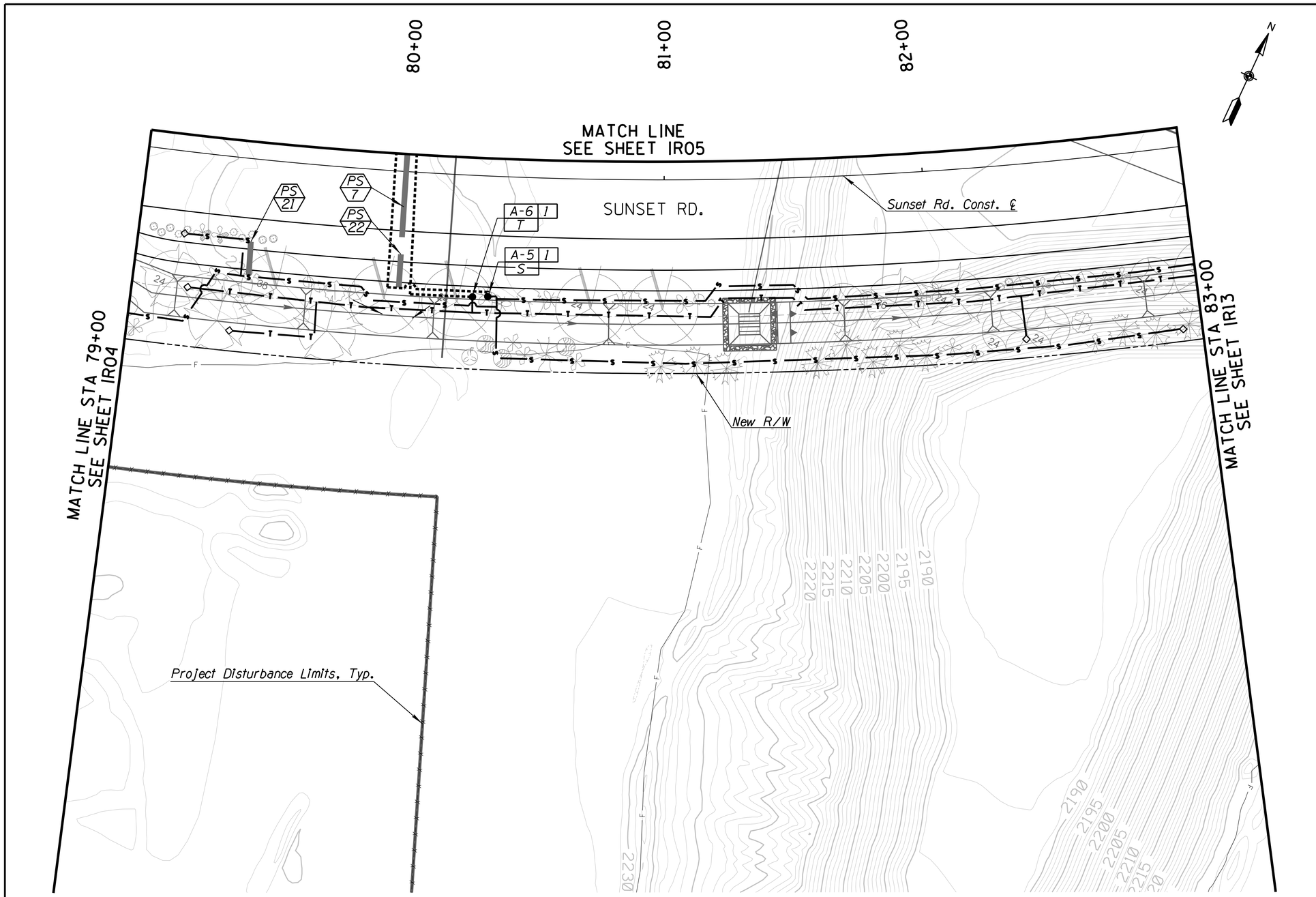

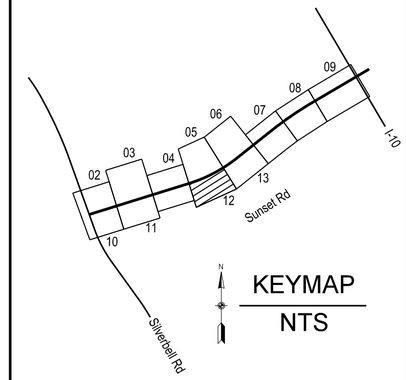

KEYMAP
NTS

VALVE AND RISER CALLOUTS

Controller & Valve No.
Shrub or Tree
Approx. Flow (GPM)
A-8 | S | 0.5
Remote Control Valve

Controller & Valve No.
Pressure Reg. Riser No.
A-15 | 5
S
Shrub or Tree
Pressure Regulator Riser

IRRIGATION SLEEVE CALLOUTS

PS 8
Irrigation Pipe Sleeve
No. Designation

IRRIGATION EQUIPMENT LEGEND

SYMBOL	ITEM
A	Controller A
M	New Water Meter
	R.P. Backflow Preventer
M	Master Valve
F	Flow Sensor
	Control Valve (Remote) (Electric)
	Pressure Regulator Riser
	Mitigation Area Iso. Ball Valve
P	Control Wire Pull Box
4 S	Rainbird Sensor or Valve Decoder 1, 2, 4, 6, or S Device
	Ground Rod w/Lightning Surge Protector
R	Pressure Relief Valve
	Mainline PVC Sch. 40
	Mainline HDPE
	Submain Class Sch 40 PVC
T	Lateral Line Sch 40 PVC (Trees)
S	Lateral Line Sch 40 PVC (Shrub)
	Lateral End Cap Assembly
	Sleeve SCH 40/HDPE PVC

NOTES:
1. Refer to Sheet IRS01 and Special Provisions for Additional Requirements.
2. Refer to Irrigation Sleeve Schedule, Sheet IRS01, and General Notes, Sheet GN01, for Sleeves.

20 0 20 40'

IRRIGATION CONSULTANT:
Carl Kominsky, RLA, ASIC
CARL KOMINSKY LANDSCAPE ARCHITECT, INC.
Tucson, Arizona
Phone: (520) 740-0700
Email: ckominsky@comcast.net

Priscilla S. Cornelio, P.E., Director

		Date
Designed	CK	11/15
Drawn	JP	11/15
Checked	LR	11/15
Proj. Engr.	JP	11/15

No.	Revision Description	Engineer	Date

EXPIRES 6/30/2018

WHEAT DESIGN GROUP
LANDSCAPE ARCHITECTS

Arizona Blue Stake
1-800-STAKE-IT
1-800-782-5348

Pima County Department of Transportation

IRRIGATION PLAN
STA. 79+00 TO STA. 83+00
SUNSET ROAD - SEGMENT I
SILVERBELL RD. TO I-10
PROJECT NO. 4RTSUN

SUNSET ROAD - SILVERBELL ROAD TO I-10 - PROJECT NO. 4RTSUN

Scale: 1"=20' | Sheet IR12 of IR13 | Page 185 of 203

FILE NAME: M:\Sunset Rd-Sil to Riv-14902-Data\Sheet Files\4RTSUN_IR12.dgn DATE: 11/14/2015 TIME: 8:20:11 AM jpatton

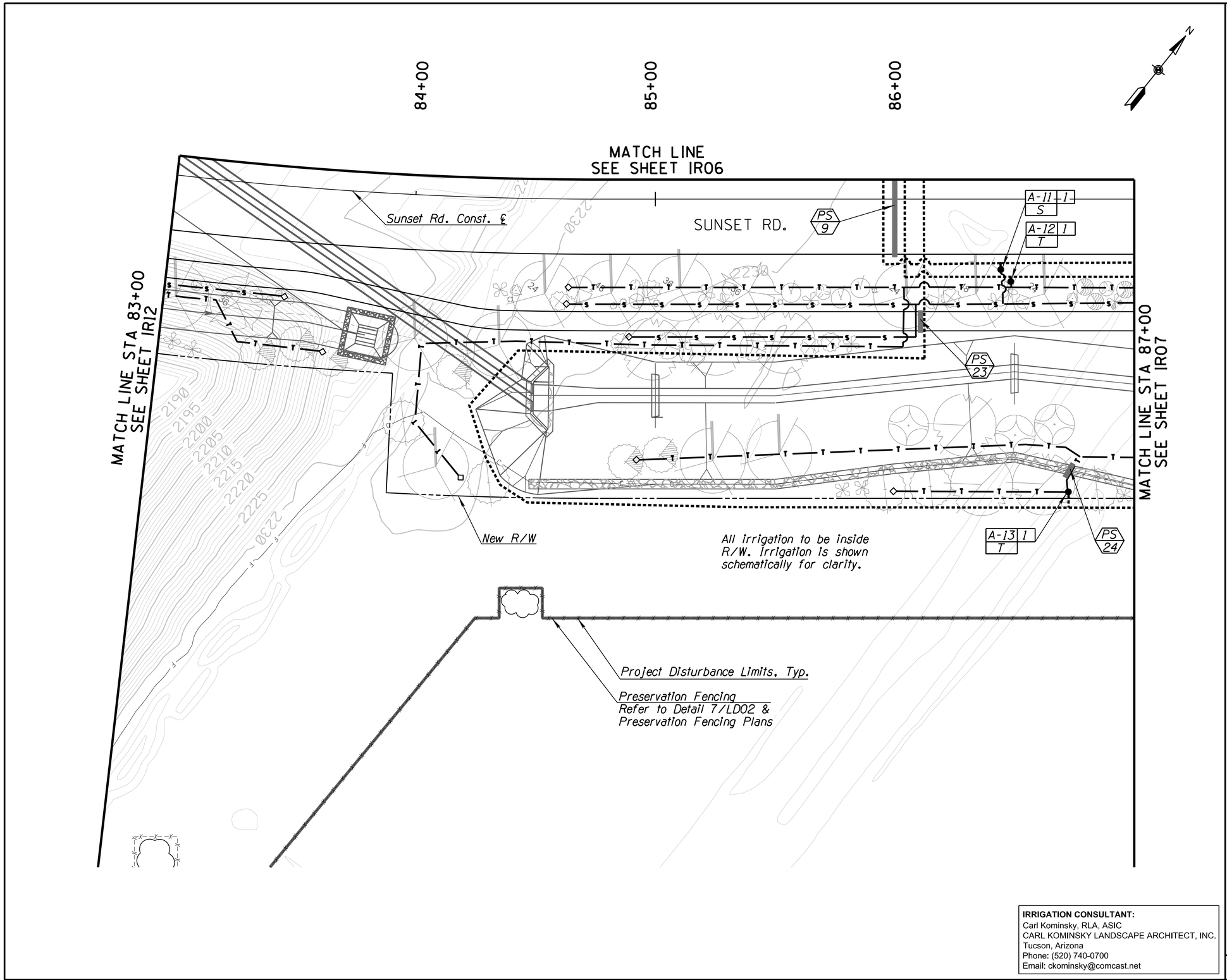

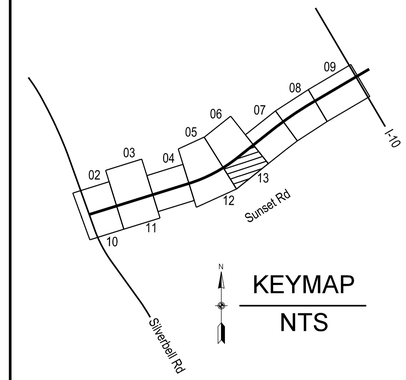

VALVE AND RISER CALLOUTS

Controller & Valve No.
Shrub or Tree
Approx. Flow (GPM)
A-8 | S | 0.5
Remote Control Valve

Controller & Valve No.
Pressure Reg. Riser No.
A-15 | 5
S
Shrub or Tree
Pressure Regulator Riser

IRRIGATION SLEEVE CALLOUTS

PS 8
Irrigation Pipe Sleeve
No. Designation

IRRIGATION EQUIPMENT LEGEND

SYMBOL	ITEM
A	Controller A
M	New Water Meter
	R.P. Backflow Preventer
M	Master Valve
F	Flow Sensor
	Control Valve (Remote) (Electric)
	Pressure Regulator Riser
	Mitigation Area Iso. Ball Valve
P	Control Wire Pull Box
4 S	Rainbird Sensor or Valve Decoder 1, 2, 4, 6, or S Device
	Ground Rod w/Lightning Surge Protector
R	Pressure Relief Valve
	Mainline PVC Sch. 40
	Mainline HDPE
	Submain Class Sch 40 PVC
T	Lateral Line Sch 40 PVC (Trees)
S	Lateral Line Sch 40 PVC (Shrub)
	Lateral End Cap Assembly
	Sleeve SCH 40/HDPE PVC

NOTES:
1. Refer to Sheet IRS01 and Special Provisions for Additional Requirements.
2. Refer to Irrigation Sleeve Schedule, Sheet IRS01, and General Notes, Sheet GN01, for Sleeves.

20 0 20 40'

IRRIGATION CONSULTANT:
Carl Kominsky, RLA, ASIC
CARL KOMINSKY LANDSCAPE ARCHITECT, INC.
Tucson, Arizona
Phone: (520) 740-0700
Email: ckominsky@comcast.net

Priscilla S. Cornelio, P.E., Director

		Date
Designed	CK	11/15
Drawn	JP	11/15
Checked	LR	11/15
Proj. Engr.	JP	11/15

No.	Revision Description	Engineer	Date

WHEAT DESIGN GROUP
LANDSCAPE ARCHITECTS

Arizona Blue Stake
1-800-STAKE-IT
1-800-782-5348

Pima County Department of Transportation

IRRIGATION PLAN
STA. 83+00 TO STA. 87+00
SUNSET ROAD - SEGMENT 1
SILVERBELL RD. TO I-10
PROJECT NO. 4RTSUN

Scale: 1"=20' | Sheet IR13 of IR13 | Page 186 of 203

SUNSET ROAD - SILVERBELL ROAD TO I-10 - PROJECT NO. 4RTSUN

FILE NAME: M:\Sunset Rd-Sil to Riv-14902-Data\Sheet Files\4RTSUN_IR13.dgn DATE: 11/14/2015 TIME: 8:20:15 AM jpatton

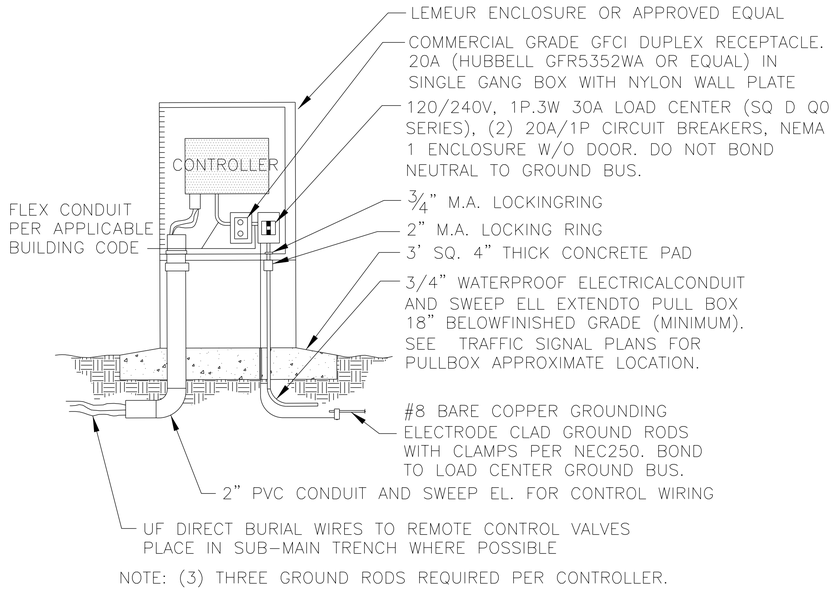

NOTE: (3) THREE GROUND RODS REQUIRED PER CONTROLLER.

808/1 CONTROLLER & CABINET DETAIL

SCALE: N.T.S. PCDOT 2/03/12

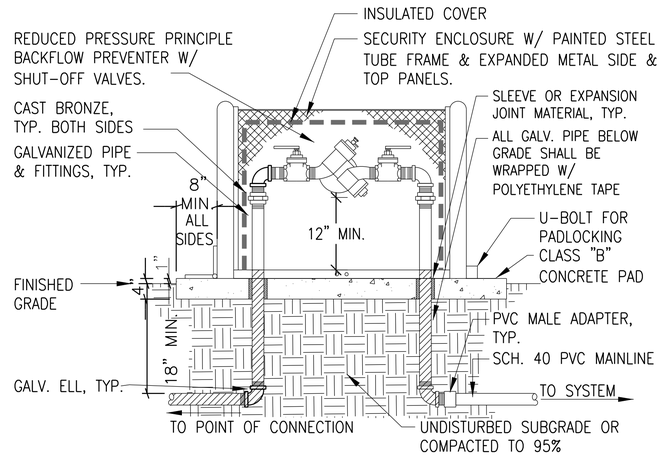

808/2 REDUCED PRESSURE PRINCIPLE BACKFLOW PREVENTER IN SECURITY ENCLOSURE

SCALE: N.T.S. PCDOT 2/03/12

NOTES:
1. ALL WIRES TO BE INSTALLED PER LOCAL CODE. TAPE AND BUNDLE WIRES EVERY 7'. PROVIDE EXPANSION COIL AT EACH WIRE CONNECTION IN VALVE BOX (WRAP AROUND 1/2" ø PIPE 15 TIMES).
2. COMPACT SOIL AROUND VALVE BOX TO SAME DENSITY AS ADJACENT UNDISTURBED SOIL.
3. ALL THREADED PVC JOINTS SHALL BE WRAPPED WITH TEFLON TAPE.

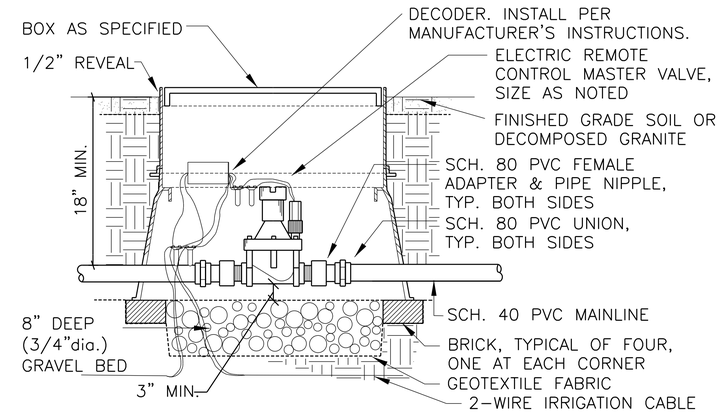

808/3 MASTER VALVE ASSEMBLY - 2 WIRE SYSTEM

SCALE: N.T.S. PCDOT 2/03/12

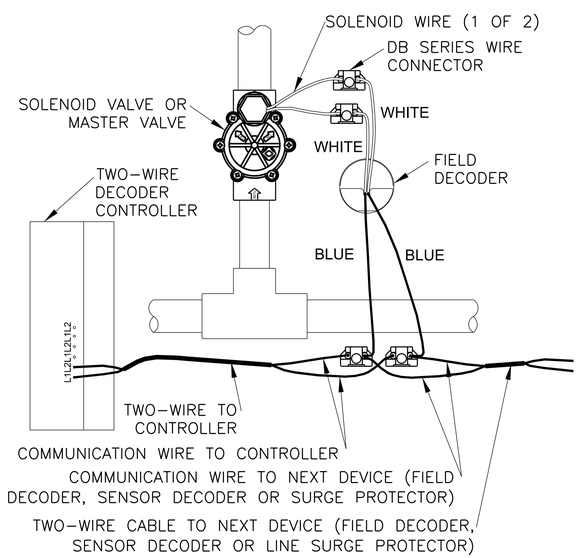

808/4 WIRING TO VALVE AND CONTROLLER

SCALE: N.T.S. PCDOT 4/27/15

NOTES:
1. PLACE 3-FEET OF EXTRA WIRE IN VALVE BOX FOR EASY SERVICING.
2. GROUNDING SHOULD BE TO 10 OHMS OR LESS.

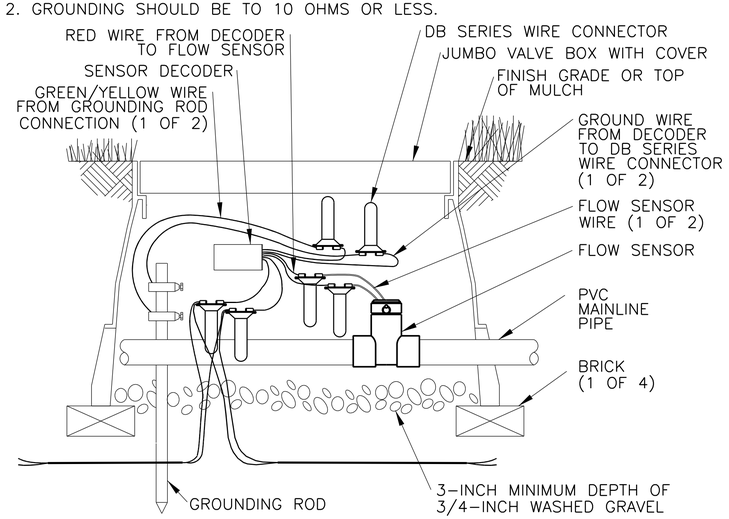

808/5 SENSOR DECODER AND FLOW SENSOR

SCALE: N.T.S. PCDOT 4/27/15

NOTES:
1. INSTALL DECODERS EVERY 500-FEET OR FOR EVERY EIGHT DECODERS ON TWO-WIRE PATH.
2 PLACE 3 FEET OF EXTRA WIRE IN EVERY VALVE BOX FOR EASIER SERVICING.

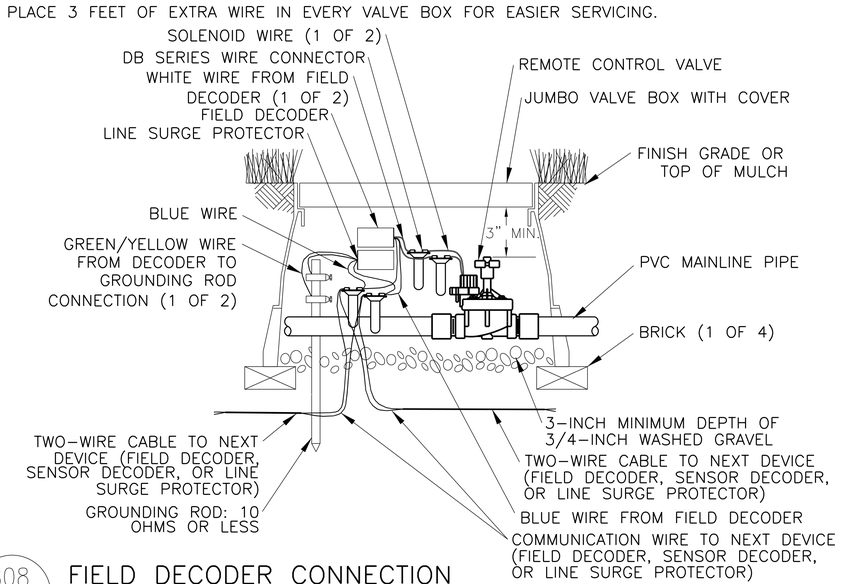

808/6 FIELD DECODER CONNECTION

SCALE: N.T.S. 4/27/2015

IRRIGATION CONSULTANT:
Carl Kominsky, RLA, ASIC
CARL KOMINSKY LANDSCAPE ARCHITECT, INC.
Tucson, Arizona
Phone: (520) 740-0700
Email: ckominsky@comcast.net

Priscilla S. Cornelio, P.E., Director

Designed	CK	11/15
Drawn	IO	11/15
Checked	LR	11/15
Proj. Engr.	JP	11/15

No.	Revision Description	Engineer	Date

WHEAT DESIGN GROUP LANDSCAPE ARCHITECTS

Arizona Blue Stake 1-800-STAKE-IT 1-800-782-5348

Pima County Department of Transportation

IRRIGATION DETAILS

SUNSET ROAD - SEGMENT I
SILVERBELL RD. TO I-10
PROJECT NO. 4RTSUN

SUNSET ROAD - SILVERBELL ROAD TO I-10 - PROJECT NO. 4RTSUN

Scale: | Sheet IRD01 of IRD05 | Page 187 of 203

FILE NAME: M:\Sunset Rd-Sil to Riv-14902-Data\Sheet Files\4RTSUN_IRD14.dgn DATE: 11/14/2015 TIME: 8:20:17 AM jpatton

NOTES:
1. INSTALL SURGE PROTECTION EVERY 500-FEET OR FOR EVERY EIGHT DECODERS ON TWO-WIRE PATH.
2. SURGE PROTECTION TO BE INSTALLED AT END OF WIRE RUN THAT TERMINATES IN THE FIELD

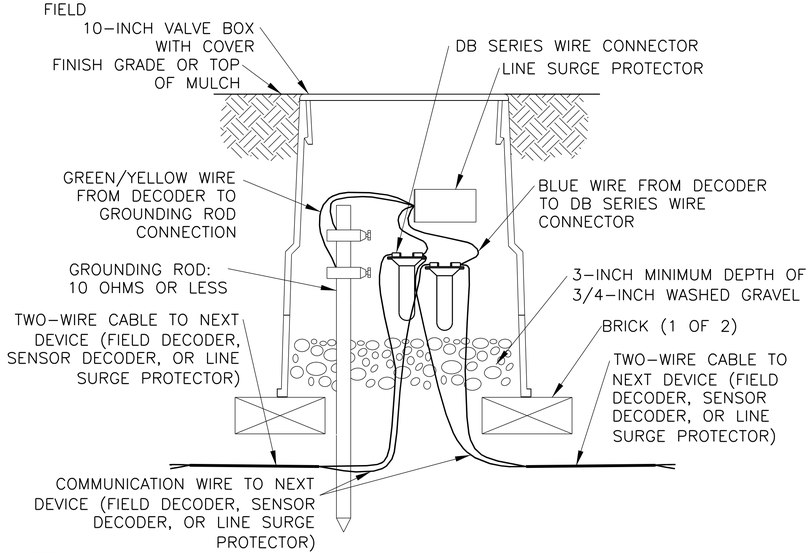

808/7 SURGE PROTECTION

SCALE: N.T.S. 4/27/2015

NOTES:
1. ALL WIRES TO BE INSTALLED PER LOCAL CODE. TAPE AND BUNDLE WIRES EVERY 7'. PROVIDE EXPANSION COIL AT EACH WIRE CONNECTION IN VALVE BOX (WRAP AROUND 1/2" DIA. PIPE 15 TIMES).
2. COMPACT SOIL AROUND VALVE BOX TO SAME DENSITY AS ADJACENT UNDISTURBED SOIL.3.ALL THREADED PVC JOINTS SHALL BE WRAPPED WITH TEFLON TAPE.

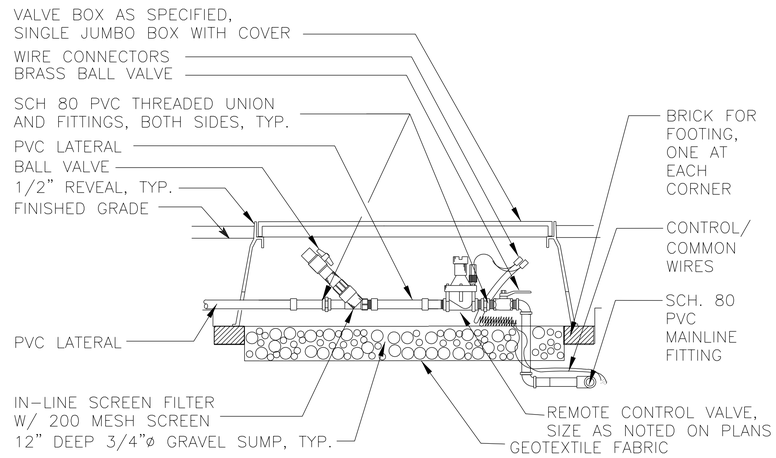

808/8 REMOTE CONTROL VALVE ASSEMBLY

SCALE: N.T.S. PCDOT 2/03/12

NOTES:
1. PROVIDE PULSE DECODER, PULSE TRANSMITTER, PULSE TRANSMITTER POWER SUPPLY, AND SURGE PROTECTOR IN ACCORDANCE WITH FLOW SENSOR / CONTROL SYSTEM MANUFACTURER'S RECOMMENDATIONS.

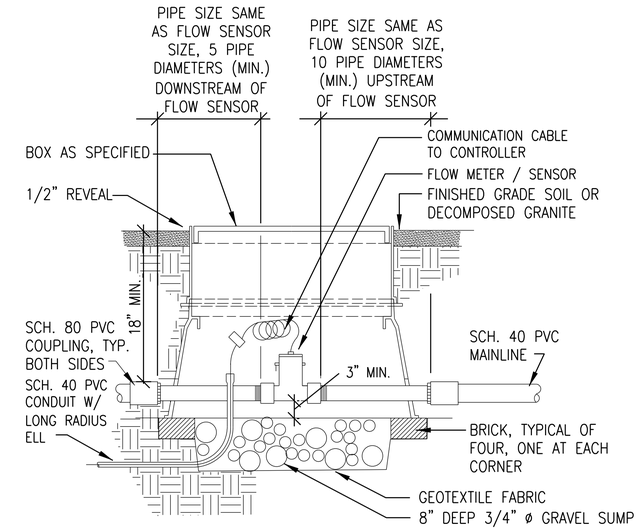

808/9 FLOW SENSOR ASSEMBLY

SCALE: N.T.S. PCDOT 2/03/2012

NOTES:
1. ALL PIPE SCH. 40 EXCEPT SCH. 80 UNIONS

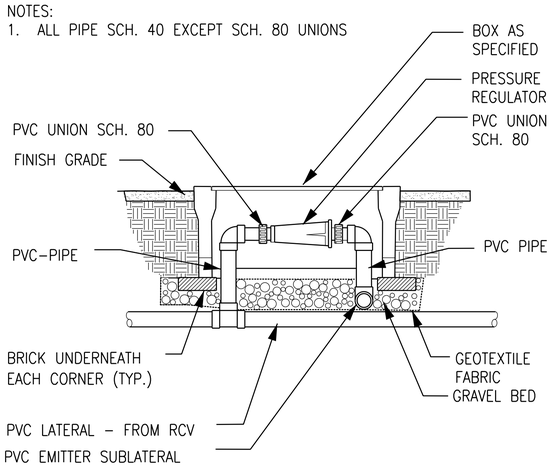

808/10 PRESSURE REGULATOR ASSEMBLY

SCALE: N.T.S. PCDOT 12/2011

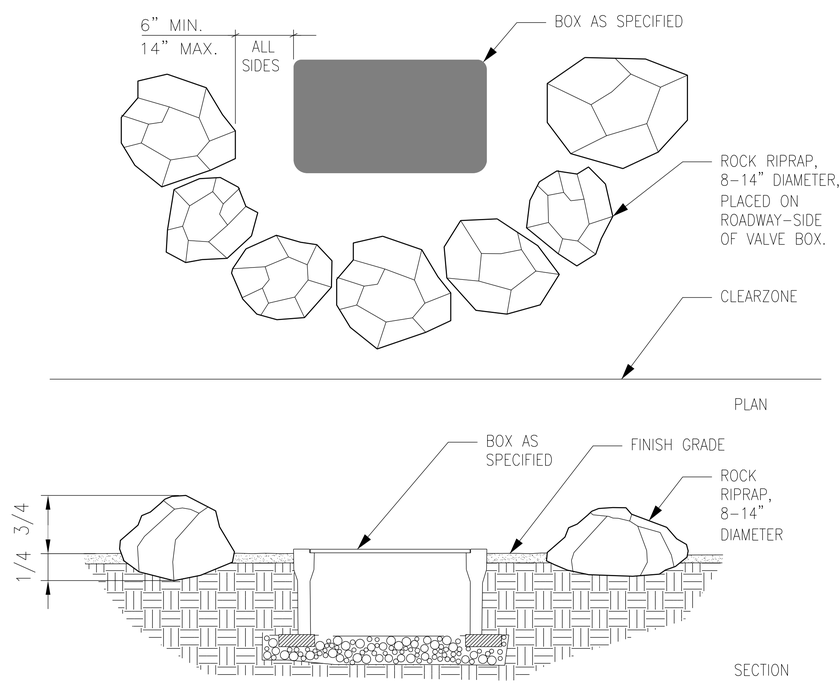

808/11 ROCK PROTECTION FOR PRESSURE REGULATOR

SCALE: N.T.S.

NOTES:

1. IN ORDER TO PROTECT VALVE BOXES/PRESSURE REGULATOR FROM DAMAGE, IRRIGATION ELEMENTS BETWEEN EDGE OF ROADWAY AND SIDEWALK/PATH SHALL BE INSTALLED WITH ROCK PROTECTION. DETAIL DOES NOT APPLY TO PRESSURE REGULATORS LOCATED BEHIND CURB/GUARDRAIL OR ON FAR SIDE OF PATH/SIDEWALK.
2. ALL PRESSURE REGULATOR VALVE BOXES AND ROCK PROTECTION SHALL BE OUTSIDE OF THE ROADWAY CLEARZONE (18' FROM EDGE OF TRAVEL LANE). NO ROCK GREATER THAN 4" IN DIAMETER SHALL BE PLACED WITHIN THE CLEARZONE.
3. ROCK RIP RAP TO SURROUND ROADWAY-SIDE OF PRESSURE REGULATOR BOX.
4. RIP RAP TO BE SET WITH 1/4 MASS BELOW FINISHED GRADE.
5. SET ROCKS FIRMLY TO PREVENT MOVEMENT. COMPACT SOIL AROUND EDGES.
6. COLOR OF ROCK RIP RAP SHALL MATCH COLOR SELECTED FOR ITEM 8030029 ROCK MULCH, REFER TO PLANTING PLANS.
7. COST OF ROCK PROTECTION IS INCIDENTAL TO COST OF PRESSURE REGULATOR.

IRRIGATION CONSULTANT:
Carl Kominsky, RLA, ASIC
CARL KOMINSKY LANDSCAPE ARCHITECT, INC.
Tucson, Arizona
Phone: (520) 740-0700
Email: ckominsky@comcast.net

Priscilla S. Cornelio, P.E., Director

Designed	CK	11/15
Drawn	IO	11/15
Checked	LR	11/15
Proj. Engr.	JP	11/15

No.	Revision Description	Engineer	Date

EXPIRES 6/30/2018

WHEAT DESIGN GROUP LANDSCAPE ARCHITECTS

Arizona Blue Stake 1-800-STAKE-IT 1-800-782-5348

Pima County Department of Transportation

IRRIGATION DETAILS

SUNSET ROAD - SEGMENT I
SILVERBELL RD. TO I-10
PROJECT NO. 4RTSUN

SUNSET ROAD - SILVERBELL ROAD TO I-10 - PROJECT NO. 4RTSUN

Scale: | Sheet IRD02 of IRD05 | Page 188 of 203

FILE NAME: M:\Sunset Rd-Sil to Riv-14902-Data\Sheet Files\4RTSUN_IRD15.dgn DATE: 11/14/2015 TIME: 8:20:18 AM jpatton

NOTES:
1. BALL VALVE TO BE SCH. 80 PVC WITH UNIONS.
2. SEAL BOX WITH GEOTEXTILE FABRIC.
3. VALVE MAY BE USED WITH SUBMAINS WHERE SHOWN. REDUCERS SHALL BE USED WHEN INSTALLED IN 1" SUBMAIN PIPING.

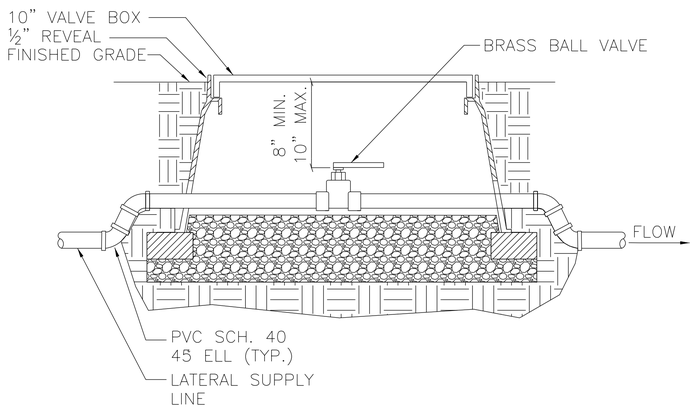

808/10 IRRIGATION – LATERAL ISOLATION VALVE
SCALE: N.T.S.

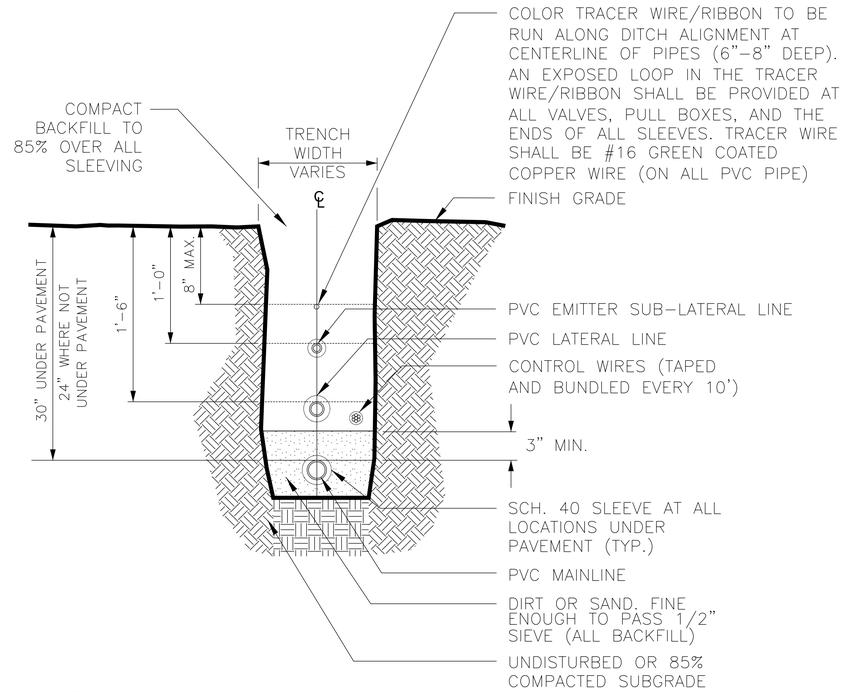

NOTES:
1. ALL PIPE SHALL BE INSTALLED IN ACCORDANCE WITH MANUFACTURER'S SPECIFICATIONS.
2. NO PIPE OR WIRE SHALL BE LOCATED UNDER PAVING UNLESS IT IS SLEEVED.

808/11 IRRIGATION SYSTEM TRENCHING
SCALE: N.T.S. PAG DETAIL NO. 400 9/12

NOTES:
1. BACKFILL WITHIN 3" OF SLEEVE SHALL BE FREE OF ROCKS AND STONES LARGER THAN 1/4"ø. IF ROCK CANNOT BE REMOVED FROM EXCAVATED SOIL, PROVIDE CLEAN SAND BEDDING.
2. 30" PER PAG STANDARD DETAIL 400.

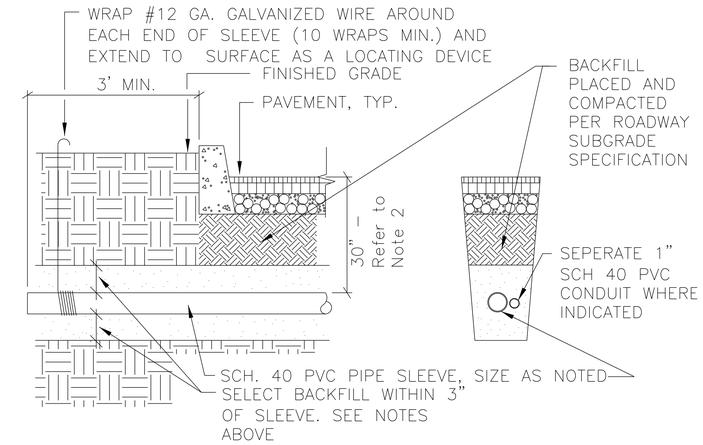

808/12 SLEEVE UNDER ROAD OR DRIVEWAY
SCALE: N.T.S. PCDOT 2/03/2012

NOTES:
1. SLEEVES UNDER WALKWAYS SHALL BE SCHEDULE 40 PVC PIPE. SIZE SHALL BE AS NOTED ON PLANS.
2. BACKFILL WITHIN 3" OF SLEEVE SHALL BE FREE OF ROCKS AND STONES LARGER THAN 1/4" DIA. IF ROCK CANNOT BE REMOVED FROM EXCAVATED SOIL, PROVIDE CLEAN SAND BEDDING.

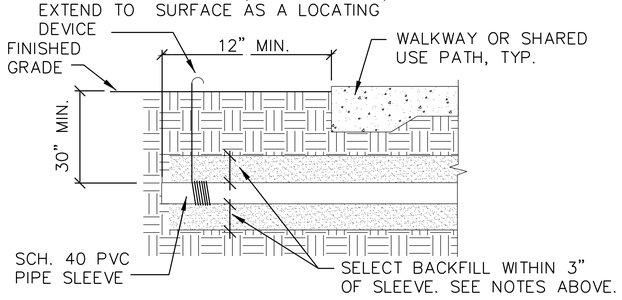

808/13 SLEEVE UNDER WALKWAY OR SHARED USE PATH
SCALE: N.T.S. PCDOT 2/03/2012

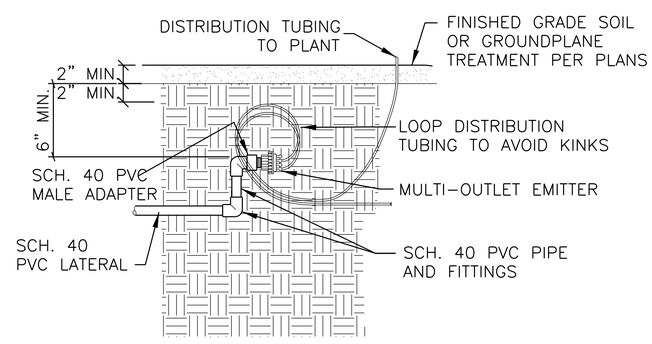

808/14 MULTI OUTLET EMITTER – SIX OUTLET
SCALE: N.T.S. PCDOT 2/03/2012

NOTES:
1. LAYOUT DISTRIBUTION TUBING AS SHOWN AND LOCATE
2. DISCHARGE POINT 2" ABOVE FINISHED GRADE.
3. MAXIMUM LENGTH OF DISTRIBUTION TUBING TO BE 15'.

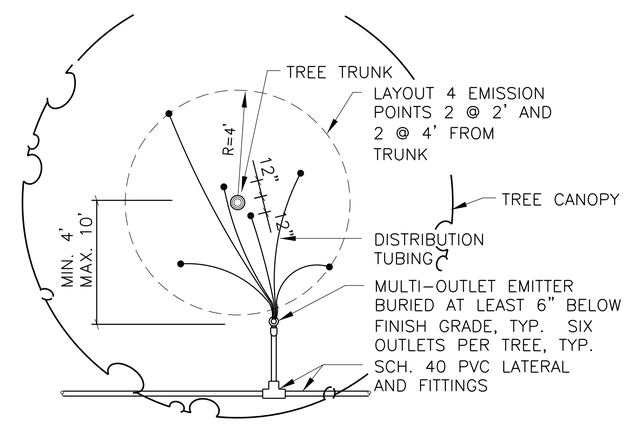

808/15 EMITTER DISTRIBUTION TUBING LAYOUT AT TREE – SIX OUTLET
SCALE: N.T.S. PCDOT 2/03/12

IRRIGATION CONSULTANT:
Carl Kominsky, RLA, ASIC
CARL KOMINSKY LANDSCAPE ARCHITECT, INC.
Tucson, Arizona
Phone: (520) 740-0700
Email: ckominsky@comcast.net

Priscilla S. Cornelio, P.E., Director

No.	Revision Description	Engineer	Date

		Date
Designed	CK	11/15
Drawn	IO	11/15
Checked	LR	11/15
Proj. Engr.	JP	11/15

WHEAT DESIGN GROUP
LANDSCAPE ARCHITECTS

Arizona Blue Stake
1-800-STAKE-IT
1-800-782-5348

Pima County Department of Transportation

IRRIGATION DETAILS

SUNSET ROAD - SEGMENT I
SILVERBELL RD. TO I-10
PROJECT NO. 4RTSUN

SUNSET ROAD – SILVERBELL ROAD TO I-10 – PROJECT NO. 4RTSUN

Scale: | Sheet IRD03 of IRD05 | Page 189 of 203

FILE NAME: M:\Sunset Rd-Sil to Riv-14902-Data\Sheet Files\4RTSUN_IRD16.dgn DATE: 11/14/2015 TIME: 8:20:19 AM jpatton

NOTES:
1. LENGTH OF DISTRIBUTION TUBING SHALL NOT EXCEED 12'–0".
2. LAYOUT DISTRIBUTION TUBING AS SHOWN AND LOCATE DISCHARGE POINT 2" ABOVE FINISHED GRADE.

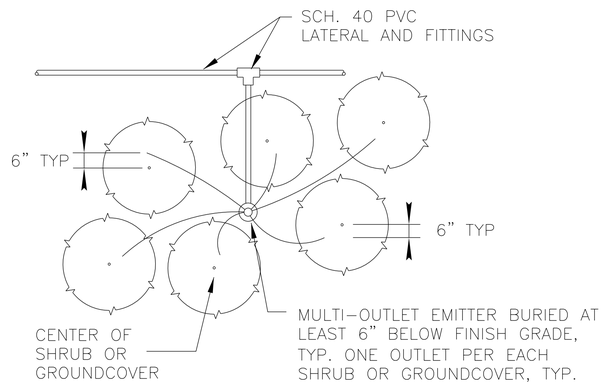

808/16 EMITTER DISTRIBUTION TUBING LAYOUT AT SHRUBS
SCALE: N.T.S. PCDOT 2/03/12

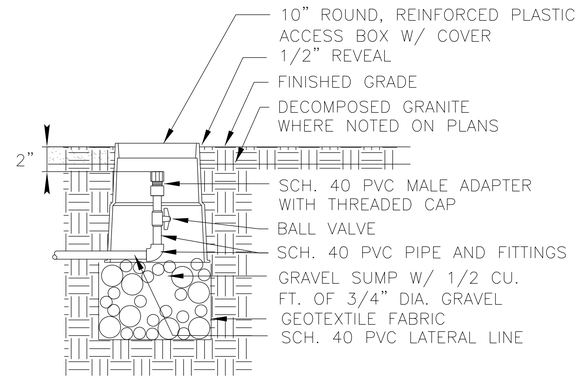

808/17 EMITTER LINE FLUSH CAP IN ACCESS BOX
SCALE: N.T.S. PCDOT 2/03/12

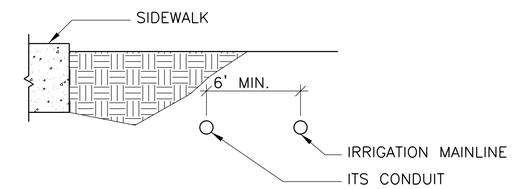

NOTES:
1. A 6' MINIMUM SEPARATION IS REQUIRED BETWEEN TRAFFIC SIGNAL/ITS CONDUITS AND IRRIGATION MAINLINE.
2. THIS DETAIL APPLIES WHEREVER IRRIGATION MAINLINE IS INSTALLED PARALLEL TO THE ITS TRENCH (NORTH SIDE OF SUNSET ROAD).
3. EXERCISE EXTREME CAUTION WHEREVER IRRIGATION LINE MUST CROSS OVER THE ITS TRENCH.

808/18 IRRIGATION – MAINLINE/ITS SEPARATION
SCALE: N.T.S.

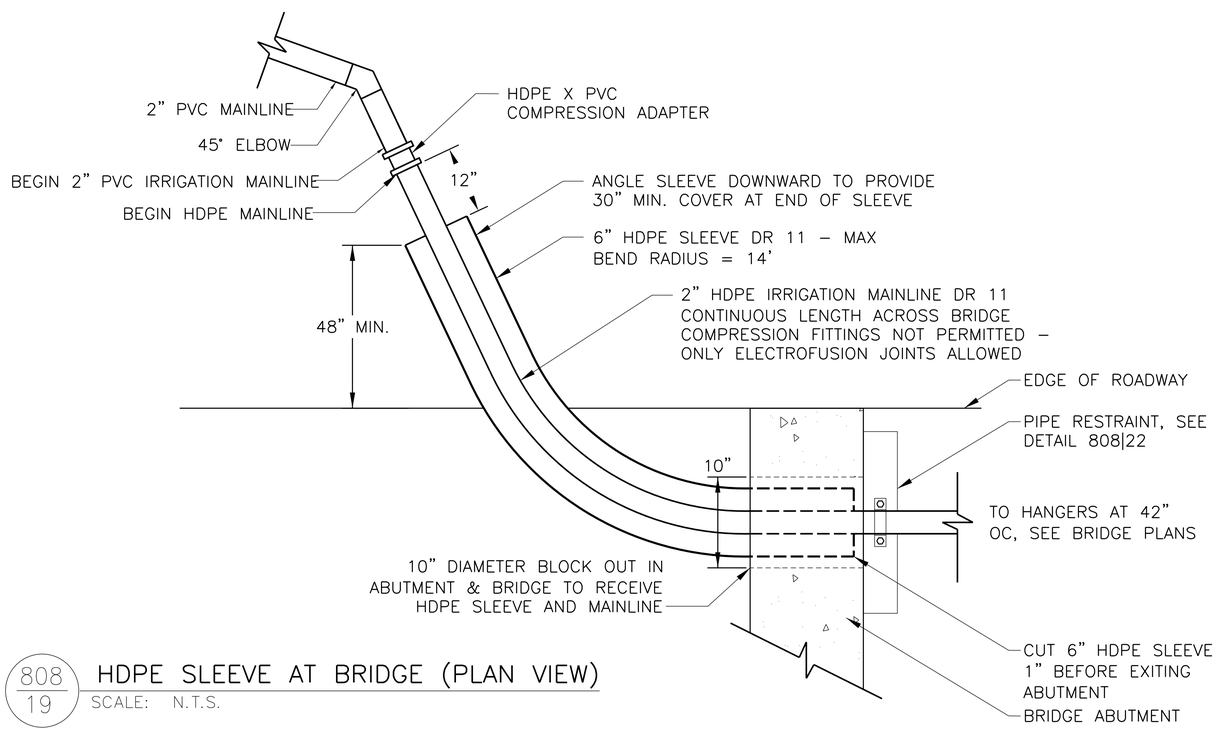

808/19 HDPE SLEEVE AT BRIDGE (PLAN VIEW)
SCALE: N.T.S.

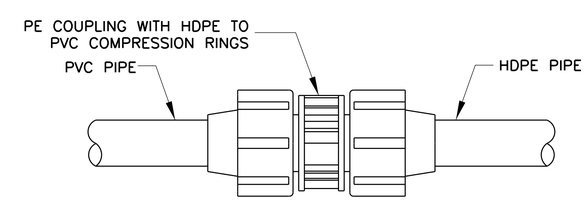

808/20 PVC TO HDPE PIPE CONNECTION DETAIL
SCALE: N.T.S.

IRRIGATION CONSULTANT:
Carl Kominsky, RLA, ASIC
CARL KOMINSKY LANDSCAPE ARCHITECT, INC.
Tucson, Arizona
Phone: (520) 740-0700
Email: ckominsky@comcast.net

Priscilla S. Cornelio, P.E., Director

Designed	CK	11/15
Drawn	IO	11/15
Checked	LR	11/15
Proj. Engr.	JP	11/15

No.	Revision Description	Engineer	Date

EXPIRES 6/30/2018

WHEAT DESIGN GROUP
LANDSCAPE ARCHITECTS

Arizona Blue Stake
1-800-STAKE-IT
Call two working days before you dig

Pima County Department of Transportation

IRRIGATION DETAILS

SUNSET ROAD - SEGMENT I
SILVERBELL RD. TO I-10
PROJECT NO. 4RTSUN

SUNSET ROAD – SILVERBELL ROAD TO I-10 – PROJECT NO. 4RTSUN

Scale: | Sheet IRD04 of IRD05 | Page 190 of 203

FILE NAME: M:\Sunset Rd-Sil to Riv-14902-Data\Sheet Files\4RTSUN_IRD17.dgn DATE: 11/14/2015 TIME: 8:20:21 AM jpatton

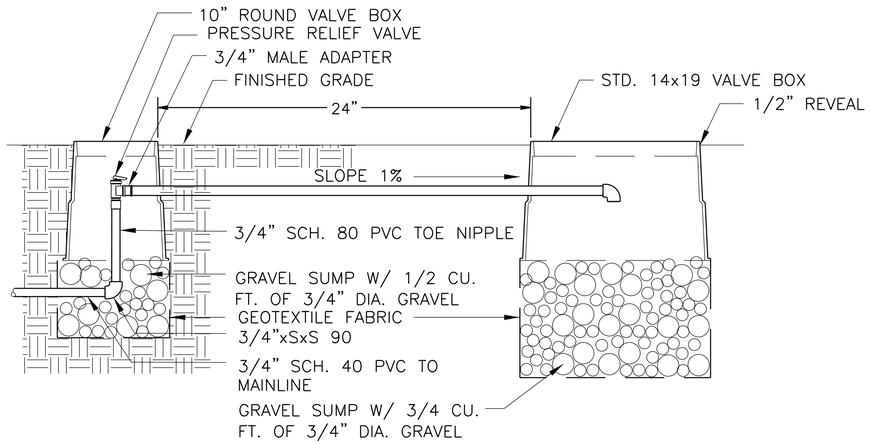

808/21 PRESSURE RELIEF VALVE

SCALE: N.T.S.

NOTES:
1. Install at each pier and at ends of bridge.

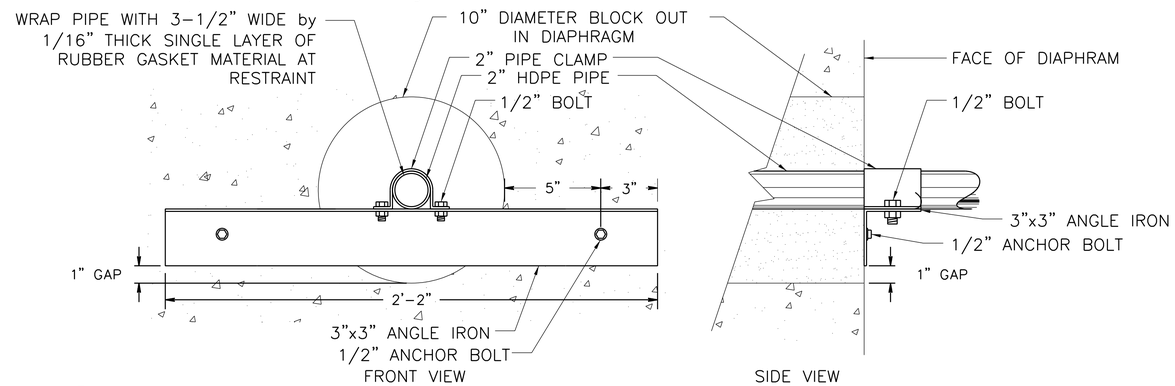

808/22 PIPE RESTRAINT

SCALE: N.T.S.

NOTES:
1. Snake pipe during installation to allow the following excess length of pipe between restraints based on air temperature at the time of install to allow for expansion/contraction.

TEMP (°F)	ADDITIONAL PIPE
20	0.5 ft
50	1.0 ft
80	1.5 ft
110	2.0 ft

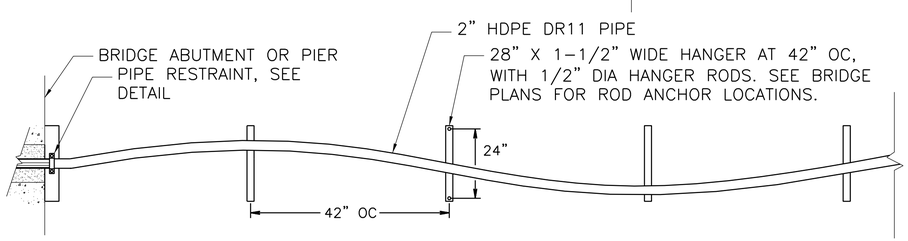

808/23 HDPE PIPE LAYOUT

SCALE: N.T.S.

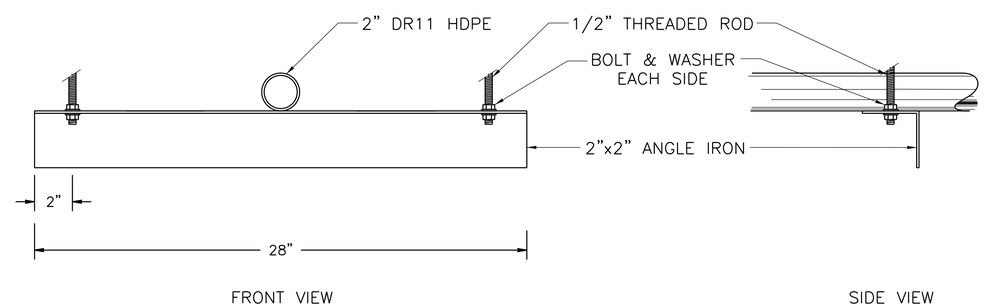

808/24 PIPE HANGER

SCALE: N.T.S.

IRRIGATION CONSULTANT:
Carl Kominsky, RLA, ASIC
CARL KOMINSKY LANDSCAPE ARCHITECT, INC.
Tucson, Arizona
Phone: (520) 740-0700
Email: ckominsky@comcast.net

Scale:

Sheet IRD05 of IRD05

Pima County Department of Transportation

Priscilla S. Cornelio, P.E., Director

No.	Revision Description	Engineer	Date

		Date
Designed	CK	11/15
Drawn	IO	11/15
Checked	LR	11/15
Proj. Engr.	JP	11/15

EXPIRES 6/30/2018

WHEAT DESIGN GROUP LANDSCAPE ARCHITECTS

Arizona Blue Stake 1-800-STAKE-IT 1-800-782-5348 Call two working days before you dig

IRRIGATION DETAILS

SUNSET ROAD - SEGMENT I
SILVERBELL RD. TO I-10
PROJECT NO. 4RTSUN

SUNSET ROAD - SILVERBELL ROAD TO I-10 - PROJECT NO. 4RTSUN

FILE NAME: M:\Sunset Rd-Sil to Riv-14902-Data\Sheet Files\4RTSUN_IRD18.dgn DATE: 11/14/2015 TIME: 8:20:22 AM jpatton

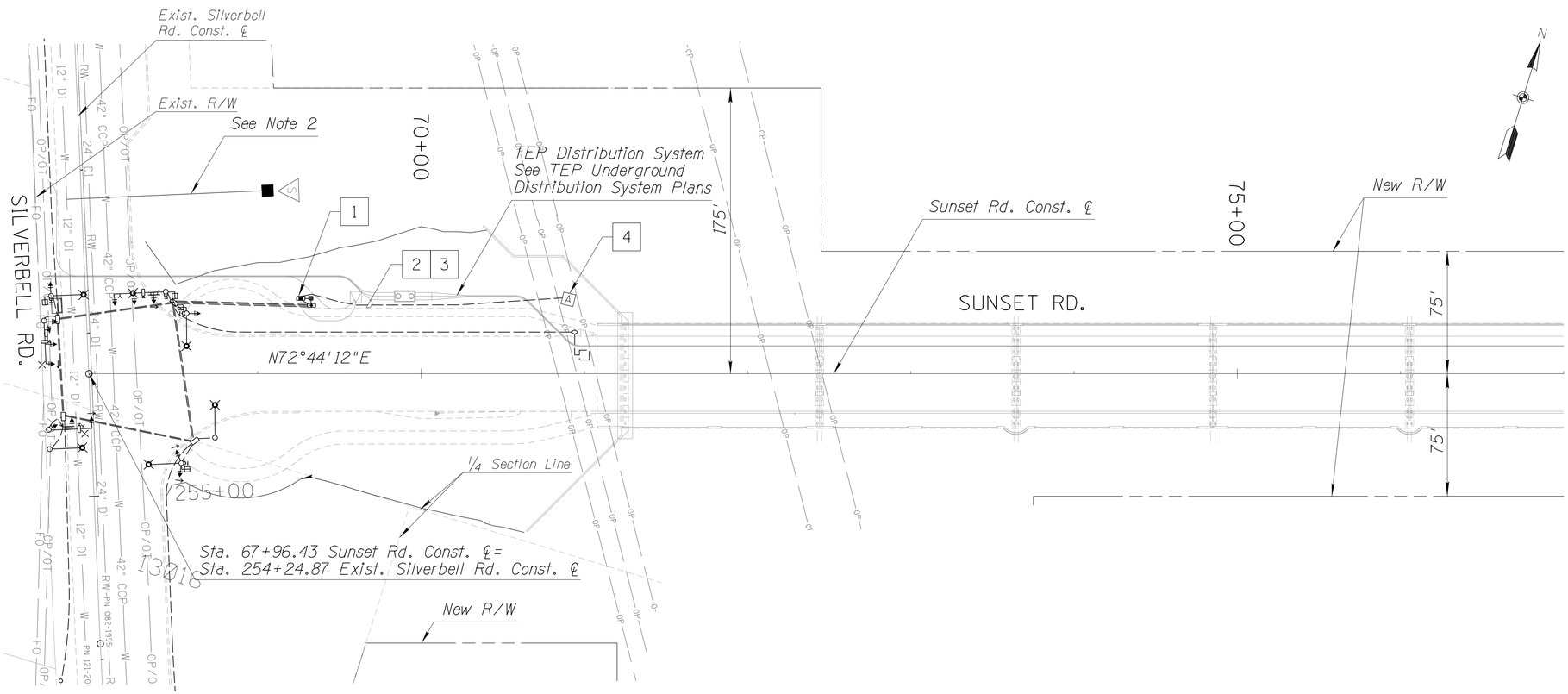

NOTES:

1. All equipment/materials and construction shall meet or exceed the requirements of the PCDOT and these plans.
2. See the Water Modification Plan sheet W3 for the service stub location.
3. Service for the Irrigation Controller shall be provided from the new Metered Service shown on the Traffic Signal Plan.

NEW ITEMS

1 New Metered Service
See Traffic Signal Plans

2 New 2" Conduit for Irrigation
Bid Item No. 7320020
Install 165± L.F.

3 (2) #12 AWG Cable
Bid Item No. 7320622
Install 330± L.F.
(1) #8 Bare Bond (Green Insulated) Solid
Bid Item No. 7320628
Install 165± L.F.

4 New Controller A - Rainbird MDC-2
Wire Irrigation Controller
See Irrigation Plans

40' 0 40' 80'
SCALE: 1"=40'

Priscilla S. Cornelio, P.E., Director

Designed	CJR	11/15
Drawn	RM	11/15
Checked	MPK	11/15
Proj. Engr.	MPK	11/15

No.	Revision Description	Engineer	Date

Registered Professional Engineer (Civil) CERTIFICATE NO. 13456 CHRISTOPHER J. ROBINSON DATE 9/17/15 EXPIRES 3-31-2017

AECOM

TRANSPORTATION

AECOM USA, Inc.
5151 SHAFER AVENUE, SUITE 400
Tucson, Arizona 85706
T: 520.887.1600 F: 520.887.8438

www.aecom.com

Pima County Department of Transportation

ELECTRICAL FOR IRRIGATION
SUNSET ROAD - SEGMENT 1
SILVERBELL RD. TO I-10

PROJECT NO. 4RTSUN

SUNSET ROAD - SILVERBELL ROAD TO I-10 - PROJECT NO. 4RTSUN

Scale:	1"=40' Horiz.	Sheet WE01 of WE01	Page 192 of 203

FILE NAME: P:\60311412 Sunset Rd\900-Work\910-CAD\20-SHEETS\4RTSUN_irr01_seg1.dgn DATE: 11/13/2015 TIME: 10:48:08 AM MurrietaR

SUNSET ROAD / SILVERBELL ROAD TO INTERSTATE 10

WATER SYSTEM MODIFICATIONS
PC NO. 4RTSUN

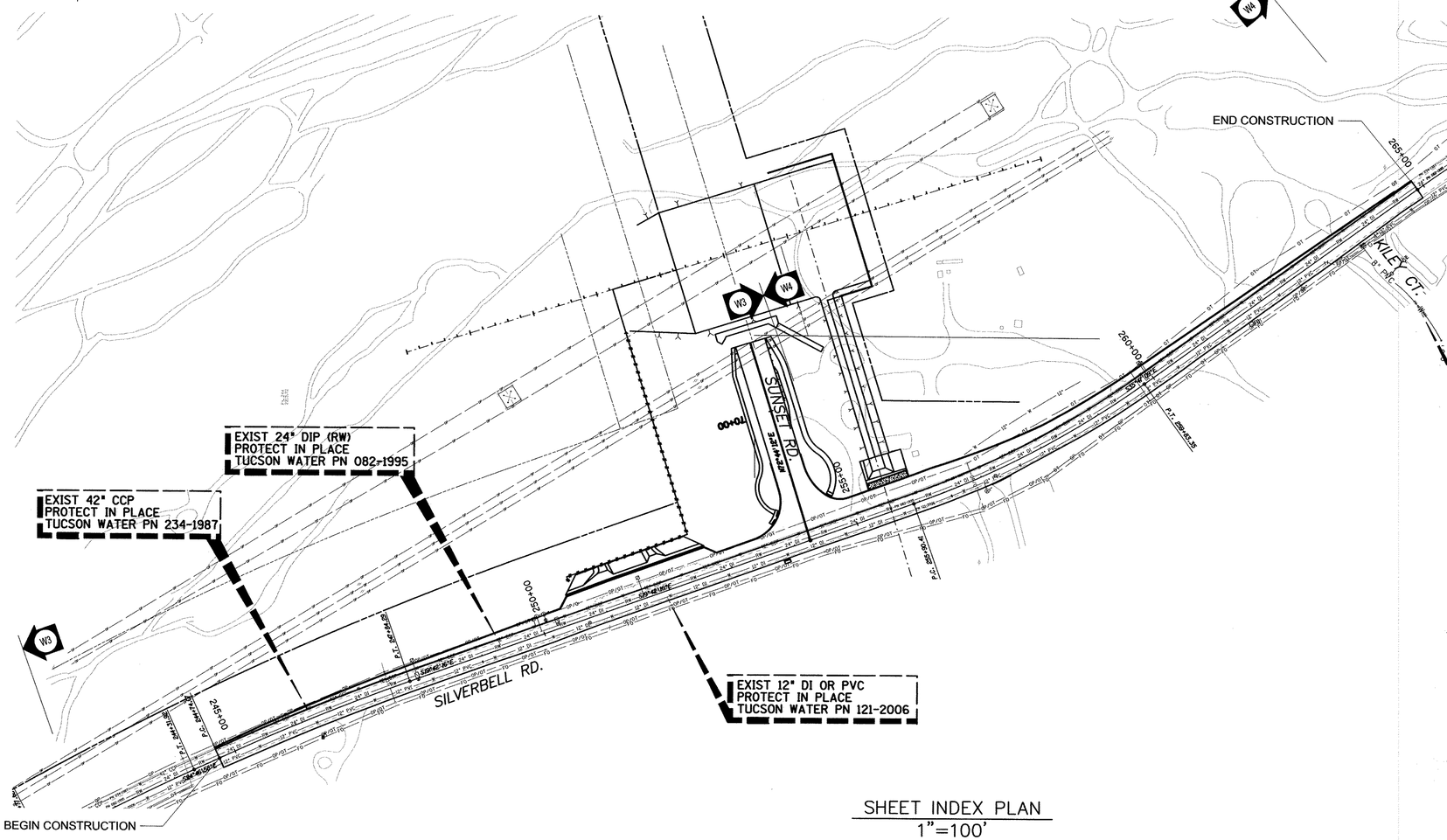

SHEET INDEX PLAN
1"=100'

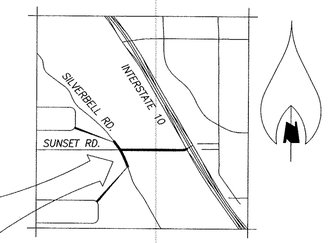

LOCATION MAP
SEC. 8, 17, & 18 T. 13 S., R. 13 E.
LATITUDE 32°18'18" N, LONGITUDE 111°03'03" W
G. & S.R.B. & M.
WARD 1
CITY OF TUCSON
PIMA COUNTY, ARIZONA
3" = 1 MILE

INSPECTOR'S RECORD DRAWING COMMENTS
INSPCT. ____
CONTR. ____
START ____ FINAL ____
PIPE MFR. PVC ____
PIPE MFR. DIP ____
PIPE MFR. OTHER ____
SVC LINE MAT ____
B.F.'S ____
GATES ____
F.H.'S BRAND ____ MAT ____
MAGNETIC TAPE INST. YES ☐ NO ☐
TRACER WIRE INST. YES ☐ NO ☐
ZONE ____ PSI ____
MAPPING INFORMATION
PLOTTED ____ ON VM ____
CHECKED ____ DATE ____

RESERVED FOR ENGINEERING RECORD DRAWING STAMP

CONTENTS

PAGE	SHEET	DESCRIPTION
185	W1	COVER SHEET
186	W2	NOTES, LEGEND, ABBREVIATIONS & MATERIALS QUANTITIES SUMMARY
187-188	W3-W4	WATER MODIFICATION PLAN SHEETS

FOR ACCEPTANCE CONDITIONS, SEE THE WATER SYSTEM MODIFICATION NOTES, NOTE 1, SHEET W2 OF W4.

11/24/2015
CITY OF TUCSON, WATER DEPARTMENT

50' 0 50' 100'
SCALE: 1" = 100'

PLAN NO. *8

Priscilla S. Cornelio, P.E., Director

		Date
Designed	C.J.R.	11/15
Drawn	R.M.	11/15
Checked	M.P.K.	11/15
Proj. Engr.	C.J.R.	11/15

No.	Revision Description	Engineer	Date

Registered Professional Engineer (Civil) CERTIFICATE NO. 33482 CHARLES J. ROBINSON Arizona U.S.A. EXPIRES 3-31-2017

AECOM
TRANSPORTATION
AECOM USA, Inc.
4201 N. Oracle Rd., SUITE 400
Tucson, Arizona 85705
T 520.887.1800 F 520.887.9438
www.aecom.com

ARIZONA 811 BLUE STAKE, INC. 1-800-STAKE-IT (782-5348)

Pima County Department of Transportation

COVER SHEET
SUNSET ROAD - SEGMENT I
SIL VERBELL RD. TO I-10

PROJECT NO. 4RTSUN

SUNSET ROAD - SILVERBELL ROAD TO I-10 - PROJECT NO. 4RTSUN

Scale:	1"=40' Horiz.	Sheet W1 of W4	Page 193 of 203

FILE NAME: P:\60311412 Sunset Rd\900-Work\910-CAD\20-SHEETS\4RTSUN_wm01.dgn DATE: 11/12/2015 TIME: 10:07:13 AM murrietar

WATER SYSTEM MODIFICATION NOTES

1. ACCEPTANCE CONDITIONS:
   A. THIS PROJECT IS ACCEPTED BY THE CITY OF TUCSON WATER DEPARTMENT FOR SUBSTANTIAL CONCURRENCE WITH STANDARD SPECIFICATIONS AND DETAILS.
   B. ACCEPTANCE OF THESE PLANS IS VALID FOR 2 YEARS AFTER THE DATE OF THE SIGNATURE.
   C. THE WARRANTY AND GUARANTEE DURATION FOR ALL WATER WORK ON THIS PROJECT SHALL BE TWO (2) YEARS COMMENCING ON THE DATE OF FINAL ACCEPTANCE OF THE AGENCY ROADWAY IMPROVEMENTS PROJECT.
2. CURRENT STANDARDS:
   ALL WATER SYSTEM MODIFICATION CONSTRUCTION WORK SHALL CONFORM TO THE FOLLOWING STANDARDS AND SPECIAL PROVISIONS:
   A. THE CITY OF TUCSON/PIMA COUNTY STANDARD SPECIFICATIONS FOR PUBLIC IMPROVEMENTS, 2003 EDITION, TUCSON WATER STANDARD SPECIFICATIONS AND DETAILS, 2011 EDITION, AND THE SPECIAL PROVISIONS FOR THIS PROJECT.
3. WATER SYSTEM MODIFICATION PRE CONSTRUCTION PROCEDURE:
   A. THE CONTRACTOR SHALL CONTACT THE CITY OF TUCSON WATER DEPARTMENT, CONSTRUCTION SECTION (791-2665), A MINIMUM OF THREE (3) CALENDAR DAYS PRIOR TO ANY WATER WORK. THE CONTRACTOR SHALL REFER TO THE CITY OF TUCSON WATER DEPARTMENT PLAN NO. 5-024-2015.
   B. THE CITY OF TUCSON WATER DEPARTMENT CONSTRUCTION SECTION WILL SCHEDULE THE TIME AND PLACE FOR THE MEETING.
   C. NO WATER SYSTEM CONSTRUCTION SHALL BEGIN UNTIL A "NOTICE TO PROCEED" HAS BEEN ISSUED BY THE CITY OF TUCSON WATER DEPARTMENT.
   D. ANY WATER WORK INSTALLED PRIOR TO THE NOTICE TO PROCEED DATE SHALL BE REMOVED BY THE CONTRACTOR AT THE CONTRACTOR'S EXPENSE.
4. SHUT DOWN OF TRANSMISSION MAINS:
   A. CONSTRUCTION ON THE 12 INCH (12") MAIN(S) SHALL TAKE PLACE ONLY IN THE OFF PEAK SEASON BETWEEN OCTOBER 1 AND MARCH 30.
   B. THE CONTRACTOR SHALL BE ALLOWED A MAXIMUM OF THREE (3) CALENDAR DAYS DOWN TIME FOR ANY ONE SHUT-DOWN.
   C. MULTIPLE SHUT-DOWNS WILL BE ALLOWED WITH A MINIMUM OF FIVE (5) CALENDAR DAYS BETWEEN SHUT-DOWNS.
5. DIMENSIONS SLOPES AND GRADES:
   ALL DIMENSIONS, SLOPES AND GRADES OF EXISTING WATER LINES ARE TAKEN FROM "AS BUILT" DRAWINGS. IT SHALL BE THE CONTRACTOR'S RESPONSIBILITY TO DETERMINE EXACT INFORMATION BEFORE ORDERING ANY SPECIAL FITTINGS OR EQUIPMENT.
6. SHUT DOWN OF DISTRIBUTION MAINS:
   SHUT-DOWN OF THE EXISTING WATER SYSTEM REQUIRING THE OPERATION OF TUCSON WATER VALVES SHALL BE COORDINATED THROUGH A CITY OF TUCSON WATER DEPARTMENT CONSTRUCTION INSPECTOR.
7. DEPTH OF NEW SERVICE LINES:
   A. NEW SERVICE LINES TWO INCHES (2") OR SMALLER SHALL BE INSTALLED AT A MINIMUM DEPTH OF TWO FEET (2.0') FROM THE BOTTOM OF ANY EXCAVATION OR SCARIFICATION TO THE TOP OF THE NEW SERVICE LINE. THIS DEPTH SHALL BE MAINTAINED FOR FIVE FEET (5.0') BEYOND ANY EXCAVATION, MEASURED PERPENDICULAR TO THE PROPOSED STRUCTURE OR EDGE OF THE PROPOSED ROADWAY.
   B. IN NO CASE SHALL NEW SERVICE LINES BE INSTALLED LESS THAN THREE FEET (3.0') DEEP FROM THE FINISHED GRADE TO THE TOP OF THE NEW SERVICE LINE.
   C. THESE MINIMUMS SHALL APPLY TO ALL SERVICE LINES UNLESS OTHERWISE NOTED ON THE PLANS.
8. WATER METERS AND METER BOXES:
   THE CONTRACTOR SHALL BE RESPONSIBLE FOR ALL WATER METERS AND METER BOXES PER SD-309. THIS WILL INCLUDE BUT NOT BE LIMITED TO:
   A. REMOVAL OF EXISTING METERS, REPLACEMENT COORDINATION AND INSTALLATION OF THE NEW AUTOMATIC METER READING (AMR) WATER METERS.
   B. DURING THIS OPERATION, EXISTING METERS SHALL BE TAGGED WITH THE CORRECT ADDRESS AND RETURNED TO TUCSON WATER. ALL EXISTING WATER METERS THAT ARE TO BE RELOCATED AS PART OF THIS PROJECT THAT ARE NOT ALREADY AUTOMATED, ARE TO BE REPLACED WITH AMR TYPE METERS AT LOCATIONS/ADDRESSES SPECIFIED ON THE PLANS.
   C. PROTECTION OF METERS. AT ALL TIMES THE CONTRACTOR SHALL TAKE PRECAUTIONS TO AVOID ANY DAMAGE TO METERS. THE CONTRACTOR SHALL PROVIDE FOR THEIR SAFE STORAGE AND THE PROPER EQUIPMENT FOR THEIR HANDLING.
   D. ACCESS TO METERS. THE CONTRACTOR SHALL MAINTAIN ACCESS TO ALL IN-SERVICE METERS DURING CONSTRUCTION. AT THE CLOSE OF THE PROJECT THE CONTRACTOR SHALL ENSURE THAT ALL METERS ARE LEFT ACCESSIBLE AND THAT ALL METER BOXES ARE ADJUSTED TO FINAL GRADE.
   E. TUCSON WATER SHALL SUPPLY ALL NEW AMR WATER METERS TO BE INSTALLED AS PART OF THIS PROJECT.
9. FIRE PROTECTION SHUT DOWN:
   FIVE (5) DAYS PRIOR TO SHUT-DOWN OF ANY FIRE HYDRANTS OR FIRE PROTECTION SERVICE LINES THE CONTRACTOR SHALL PROVIDE THE CITY TUCSON WATER DEPARTMENT CONSTRUCTION INSPECTOR WITH A WRITTEN REPORT INDICATING THE LOCATION AND DURATION OF ANY FIRE HYDRANT OR FIRE PROTECTION SERVICE SHUT-DOWNS.

   THE CONTRACTOR SHALL NOTIFY THE CITY OF TUCSON WATER DEPARTMENT CONSTRUCTION INSPECTOR WHEN FIRE HYDRANTS OR FIRE PROTECTION SERVICES ARE BACK IN SERVICE.
10. MAINTAIN SERVICE TO CUSTOMERS:
    THE CONTRACTOR SHALL BE RESPONSIBLE FOR MAINTAINING SERVICE TO ALL WATER CUSTOMERS DURING CONSTRUCTION.

    IT SHALL BE THE CONTRACTOR'S RESPONSIBILITY TO DETERMINE WHICH SERVICES WILL BE AFFECTED BY THIS PROJECT.

    IT MAY BE NECESSARY TO ACCOMPLISH TIE-OVERS, RE-CONNECTIONS, ETC., WHILE BUSINESS CUSTOMERS ARE CLOSED.

    IF INTERRUPTION OF SERVICE IS UNAVOIDABLE THE CONTRACTOR SHALL NOTIFY THE WATER INSPECTOR A MINIMUM OF FIVE (5) DAYS IN ADVANCE TO COORDINATE SHUT-DOWNS. EVERY EFFORT SHALL BE MADE TO MINIMIZE DISRUPTION TO THE CUSTOMER.

    IF THE CONTRACTOR CHOOSES TO ABANDON ANY PORTION OF THE EXISTING WATER SUPPLY SYSTEM WITHOUT CONCURRENT NEW CONSTRUCTION AS CALLED FOR ON THE PLANS, THE CONTRACTOR SHALL PROVIDE ANY AND ALL MATERIALS AND CONSTRUCTION OF A TEMPORARY OR PERMANENT WATER SYSTEM TO MAINTAIN CONTINUED WATER SERVICE TO CUSTOMERS AT NO ADDITIONAL COST.
11. SPECIAL USE WATER PERMITS:
    PRIOR TO COMMENCING WORK, THE CONTRACTOR SHALL APPLY FOR TWO (2) SPECIAL WATER USE PERMITS FROM THE CITY OF TUCSON WATER DEPARTMENT COMMERCIAL SECTION.
    A. CONSTRUCTION WATER SPECIAL PERMIT:
       THERE WILL BE NO CHARGE FOR THIS PERMIT, BUT THE CONTRACTOR MUST PAY THE SUM OF $30.00 PLUS TAX AS THE ESTIMATED COST OF THE WATER TO BE USED, THIS WATER MAY ONLY BE USED FOR TRENCH SETTLING, DISINFECTION AND TESTING.
    B. METERED FIRE HYDRANT ONLY PERMIT:
       THIS NON-TRANSFERABLE PERMIT WILL ENTITLE THE CONTRACTOR TO USE WATER THROUGH A METER FROM EXISTING FIRE HYDRANTS AT APPROVED LOCATIONS. WATER USED UNDER THIS PERMIT IS FOR GENERAL CONSTRUCTION PURPOSES SUCH AS DUST CONTROL, SITE PREPARATION, ETC.
12. NEW MATERIAL:
    ALL MATERIALS, FITTINGS, AND APPURTENANCES CALLED FOR ON THE PLANS, OR REQUIRED FOR A COMPLETE INSTALLATION, SHALL BE NEW. NO REFURBISHED ITEMS OR MATERIALS WILL BE ALLOWED.
13. VALVE BOXES:
    THE CONTRACTOR SHALL BE RESPONSIBLE FOR ADJUSTING ALL NEW AND EXISTING WATER VALVE BOXES TO THE FINISHED GRADE PER SD-300.
14. MARKING TAPE:
    IF ANY EXISTING DETECTABLE MARKING TAPE IS DISTURBED OR DESTROYED DURING CONSTRUCTION, THE CONTRACTOR SHALL FURNISH AND INSTALL APPROPRIATE NEW TAPE. THERE SHALL BE NO ADDITIONAL CHARGE FOR THIS REINSTALLATION.
15. CORROSION CONTROL:
    THIS PROJECT HAS CORROSION CONTROL/MONITORING WORK INCLUDED AS PART OF THE CONTRACT. THE CONTRACTOR SHALL PROVIDE ALL SUBMITTALS, COMPONENTS AND REPORTS OF THE CORROSION WORK AS CALLED FOR ON THESE PLANS AND IN THE SPECIAL PROVISIONS.
16. TRACER WIRE:
    THIS PROJECT WILL HAVE TRACER WIRE INSTALLED. IF ANY EXISTING TRACER WIRE IS DISTURBED OR DESTROYED DURING CONSTRUCTION, THE CONTRACTOR SHALL FURNISH AND INSTALL NEW TRACER WIRE TO REPLACE THE EXISTING. THERE SHALL BE NO ADDITIONAL CHARGE FOR THIS REINSTALLATION.

    THE TRACER WIRE SHALL BE CERTIFIED BY A LICENSED ELECTRICAL CONTRACTOR FOR CONTINUITY PRIOR TO FINAL ROADWAY PAVEMENT. FINAL ACCEPTANCE WILL NOT BE GRANTED UNTIL CERTIFICATION IS RECEIVED BY TUCSON WATER.
17. LEAD FREE:
    THE CONTRACTOR SHALL FURNISH AND INSTALL ALL PIPE FITTINGS, APPURTENANCES OR ANY OTHER MATERIALS TO BE IN CONTACT WITH POTABLE WATER IN ACCORDANCE WITH THE LEAD-FREE REQUIREMENTS DEFINED BY THE "REDUCTION OF LEAD IN DRINKING WATER ACT OF 2011" AMENDING SECTION 1417 OF THE SAFE DRINKING WATER ACT.

<u>BASIS OF BEARING</u>

THE BASIS OF BEARING FOR THIS PROJECT IS A GRID BEARING OF N55°56'26"E BETWEEN PIMA COUNTY DOT/CITY OF TUCSON DOT GEODETIC, CONTROL POINT AI03 AND PIMA COUNTY DOT/CITY OF TUCSON DOT GEODETIC, CONTROL POINT AG09, AS ESTABLISHED FROM THE ARIZONA COORDINATE SYSTEM, 1983 (HARN 92), CENTRAL ZONE 0202.

<u>BASIS OF ELEVATION</u>

VERTICAL CONTROL FOR THIS PROJECT IS BASED ON PIMA COUNTY BENCHMARK DESIGNATION Q291 AKA NGS Q291 CS055R. BASED ON NAVD 88 DATUM HAVING AN ELEVATION OF 2,232.24 FEET. STATION MARK IS A BENCHMARK DISK SET IN CONCRETE STANDARD Q291 1951. STAMPED Q291 1951.

MATERIAL QUANTITIES SUMMARY

ITEM NUMBER	ITEM DESCRIPTION	SHEET W3		SHEET W4		TOTALS	
		EST.	AS BUILT	EST.	AS BUILT	EST.	AS BUILT
5101608	POTABLE WATER PIPE, COPPER, 2" W/ FITTINGS	120		-		120	
5103101	POTABLE WATER, ADJUST EXISTING VALVE BOX & COVER	3		1		4	
5107005	POTABLE WATER, CORROSION REPORT	1		-		1	
5107110	POTABLE WATER, CORROSION TEST STATION (CTS), NEW, ABOVE GROUND	1		1		2	
5108156	POTABLE WATER, STUBS (S), 1-1/2"	1		-		1	
5113101	RECLAIMED WATER, ADJUST EXISTING VALVE BOX AND COVER	1		-		1	
5117005	RECLAIMED WATER, CORROSION REPORT	1		-		1	
5117110	RECLAIMED WATER, CORROSION TEST STATION (CTS), NEW, ABOVE GROUND	-		1		1	
5117140	RECLAIMED WATER, CORROSION TEST STATION (CTS), RELOCATED BELOW GROUND	1		-		1	

WATER SYSTEM MODIFICATION LEGEND & ABBREVIATIONS

EXISTING	PLAN SYMBOLS	NEW
6" CA PN 123-1963 W	POTABLE WATER MAIN	
6" CA PN 123-1963 R	RECLAIMED WATER MAIN	R
	POTABLE GATE VALVE	
	POTABLE BUTTERFLY VALVE	
	RECLAIMED BUTTERFLY VALVE	
	END CAP	
	BENDS, HORIZ. & VERT.	
6" W	MATERIAL CHANGE	
1" W	SERVICE LINE & METER BOX	
3/4"	AIR RELEASE VALVE W/ SIZE	1"
	CORROSION TEST STATION	
	SERVICE STUB	S
	RIGHT-OF-WAY	
	PROPERTY LINE	
	CONSTRUCTION CENTERLINE & SECTION LINE	
001-27-1917	PIMA COUNTY ASSESOR PARCEL NUMBER	
	CITY OF TUCSON LIMITS	

ARV	AIR RELEASE VALVE
CCP	CONCRETE CYLINDER PIPE
CONC.	CONCRETE
CONST. ℄	CONSTRUCTION CENTERLINE
CTS	CORROSION TEST STATION
CU	COPPER
DIP	DUCTILE IRON PIPE
EOP	EDGE OF PAVEMENT
ESMT	EASEMENT
EXIST.	EXISTING
L.F.	LINEAR FEET (FOOT)
LT.	LEFT
P.N.	PARCEL NUMBER
PN	PLAN NUMBER
PVC	POLYVINYL CHLORIDE
RW	RECLAIMED WATER
RD.	ROAD
RT.	RIGHT
R/W	RIGHT-OF-WAY
STA.	STATION

Priscilla S. Cornelio, P.E., Director

		Date
Designed	CJR	11/15
Drawn	RM	11/15
Checked	MPK	11/15
Proj. Engr.	CJR	11/15

No.	Revision Description	Engineer	Date

Registered Professional Engineer (Civil) CERTIFICATE NO. 33452 CHARLENE J. ROBINSON DATE SIGNED 11/12/15 ARIZONA, U.S.A. EXPIRES 3-31-2017

SUNSET ROAD - SILVERBELL ROAD TO I-10 - PROJECT NO. 4RTSUN

AECOM www.aecom.com
TRANSPORTATION
AECOM USA, Inc.
333 E. WETMORE RD, SUITE 400
Tucson, Arizona 85705
T 520.887.1800 F 520.887.8438

Call at least two full working days before you being excavation. ARIZONA811 Arizona Blue Stake, Inc. Dial 8-1-1 or 1-800-STAKE-IT (782-5348) In Maricopa County: (602)263-1100

Pima County Department of Transportation

NOTES, LEGEND, ABBREVIATIONS, & MATERIALS QUANTITIES SUMMARY
SUNSET ROAD - SEGMENT I
SILVERBELL RD. TO I-10
PROJECT NO. 4RTSUN

Scale: N.T.S. | Sheet W2 of W4 |

FILE NAME: P:\60311412 Sunset Rd\900-Work\910-CAD\20-SHEETS\4RTSUN_wm02.dgn DATE: 11/13/2015 TIME: 10:49:57 AM MurrietaR

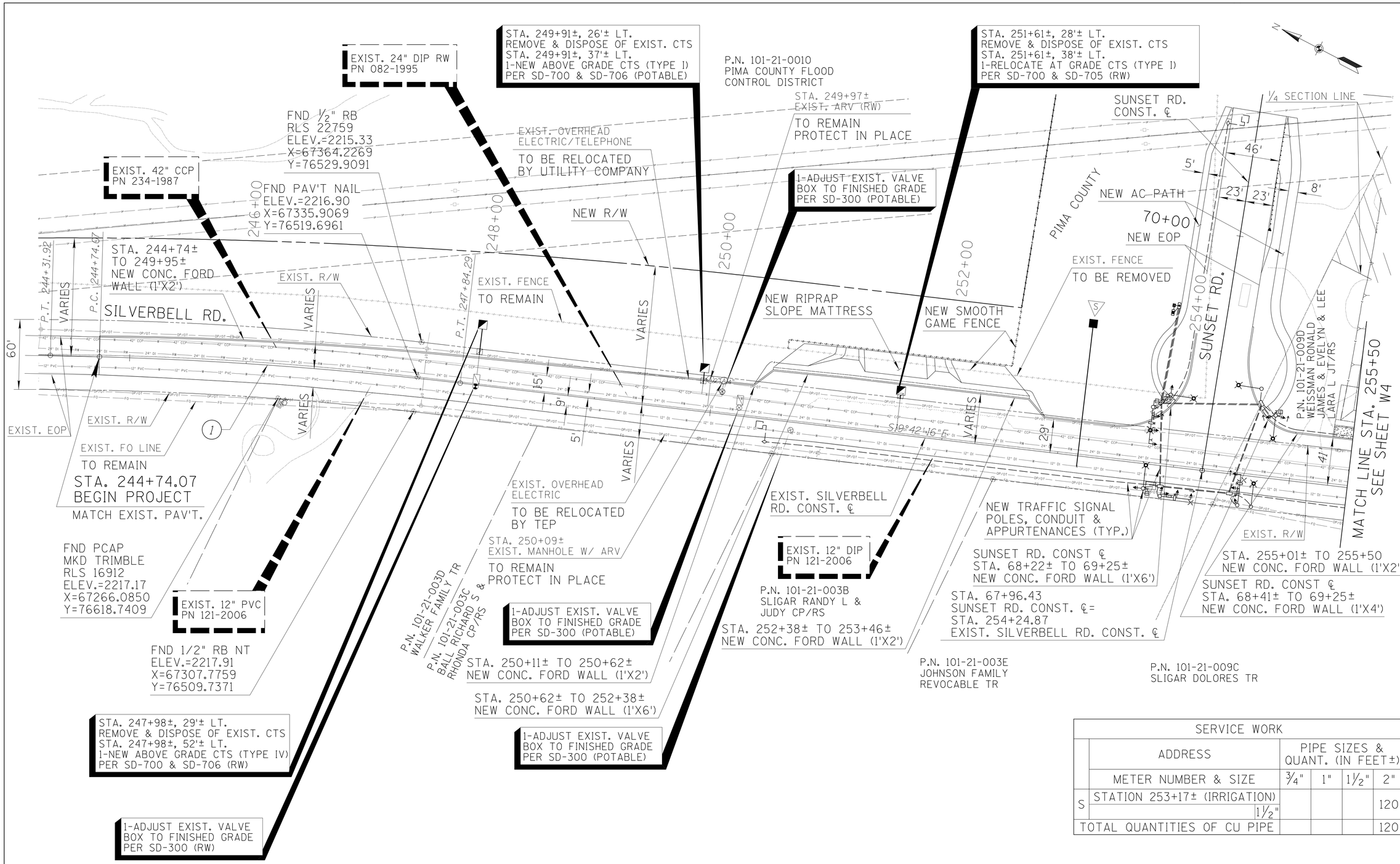

CURVE DATA TABLE

CURVE	DELTA	RADIUS	LENGTH	TANGENT
1	5°04'42"	3500.00'	310.22'	155.21'

SERVICE WORK

	ADDRESS	PIPE SIZES & QUANT. (IN FEET±)			
	METER NUMBER & SIZE	3/4"	1"	1 1/2"	2"
S	STATION 253+17± (IRRIGATION) 1 1/2"				120
TOTAL QUANTITIES OF CU PIPE					120

Priscilla S. Cornelio, P.E. Director

No.	Revision Description	Engineer	Date

		Date
Designed	CJR	11/15
Drawn	RM	11/15
Checked	MPK	11/15
Proj. Engr.	CJR	11/15

Registered Professional Engineer (Civil) CERTIFICATE NO. 34562 CHARLES J. ROBINSON STATE OF ARIZONA DATE EXPIRES 3-31-2017

AECOM

TRANSPORTATION

AECOM USA, Inc.
4635 S. Lakeshore Dr., SUITE 400
Tucson, Arizona 85705
T 520.887.7800 F 520.887.8438

www.aecom.com

ARIZONA 811 BLUE STAKE, INC. CALL 8 WORK DAYS FOR MARKING OF UNDERGROUND UTILITIES

Pima County Department of Transportation

WATER MODIFICATION PLAN
SUNSET ROAD - SEGMENT I
SILVERBELL RD. TO I-10
STA. 244+74 TO STA. 255+50
PROJECT NO. 4RTSUN

SUNSET ROAD – SILVERBELL ROAD TO I-10 – PROJECT NO. 4RTSUN

Scale: 1"= 40' Horiz. | Sheet W3 of W4 | Page 195 of 203

FILE NAME: P:\60311412 Sunset Rd\900-Work\910-CAD\20-SHEETS\4RTSUN_wm03.dgn DATE: 11/16/2015 TIME: 10:40:21 AM MurrietaR

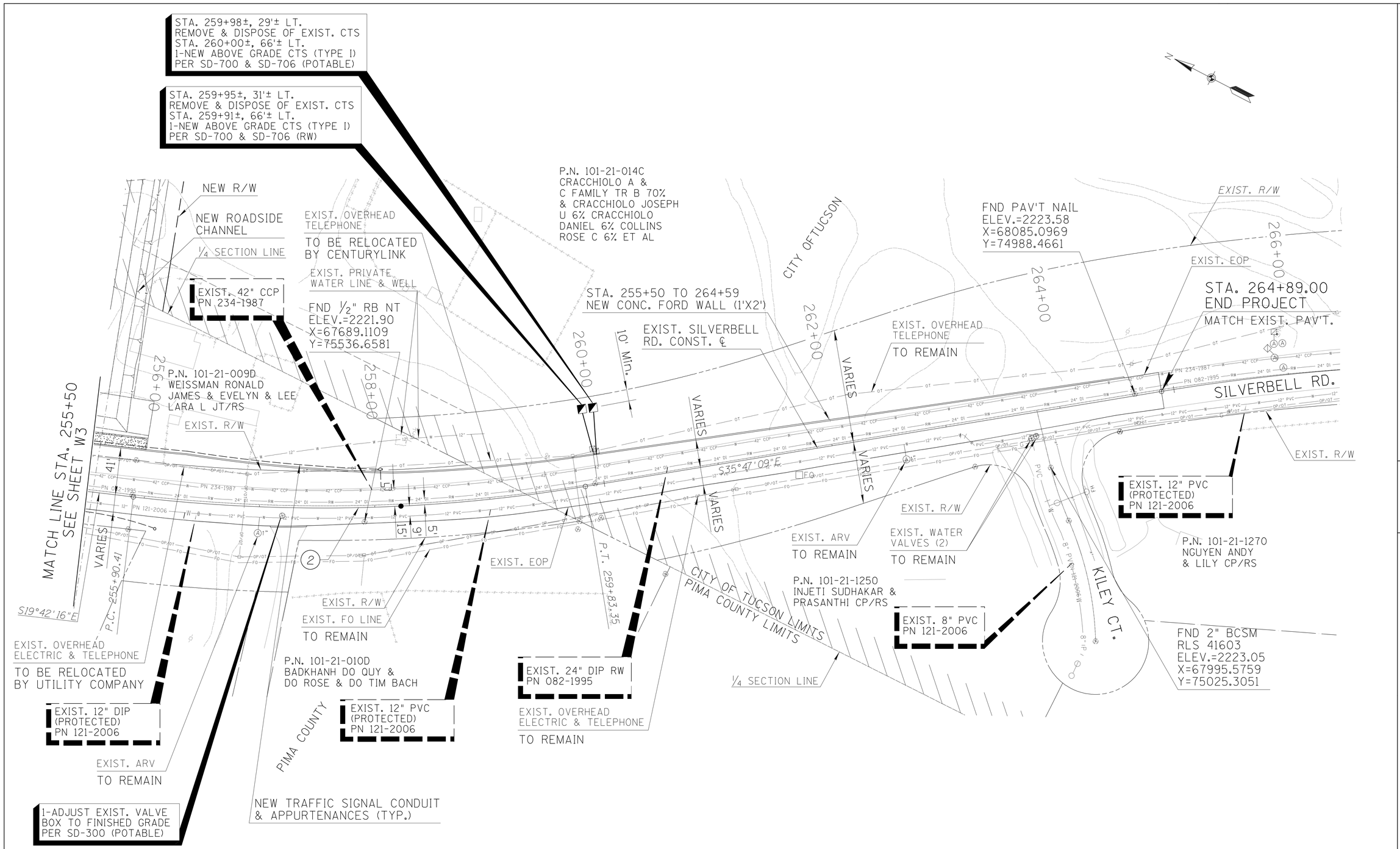

CURVE DATA TABLE

CURVE	DELTA	RADIUS	LENGTH	TANGENT
2	16°04'54"	1400.00'	392.95'	197.77'

Priscilla S. Cornelio, P.E., Director

Designed	CJR	11/15
Drawn	RM	11/15
Checked	MPK	11/15
Proj. Engr.	CJR	11/15

No.	Revision Description	Engineer	Date

Registered Professional Engineer (Civil) CERTIFICATE NO. 13456 CHRISTOPHER J. ROBINSON DATE SIGNED 5/7/2017 EXPIRES 3-31-2017

AECOM

TRANSPORTATION

AECOM USA, Inc.
5151 E. Broadway, SUITE 400
Tucson, Arizona 85705
T 520.887.1800 F 520.887.8438

www.aecom.com

ARIZONA 811 BLUE STAKE, INC. CALL 8 WORK DAYS PRIOR TO DIGGING 1-800-782-5348 www.azbluestake.com

Pima County Department of Transportation

WATER MODIFICATION PLAN
SUNSET ROAD - SEGMENT I
SILVERBELL RD. TO I-10
STA. 255+50 TO 264+89
PROJECT NO. 4RTSUN

SUNSET ROAD - SILVERBELL ROAD TO I-10 - PROJECT NO. 4RTSUN

Scale:	1"= 40' Horiz.	Sheet W4 of W4	Page 196 of 203

FILE NAME: P:\60311412 Sunset Rd\900-Work\910-CAD\20-SHEETS\4RTSUN_wm04.dgn DATE: 11/13/2015 TIME: 10:52:31 AM MurrietaR

SUNSET RD
SILVERBELL RD TO I-10 EASTBOUND FRONTAGE RD (EBFR)
UNDERGROUND DISTRIBUTION
CIVIL CONSTRUCTION

NORTH
N.T.S.
T13S, R13E, S8, 17, 18

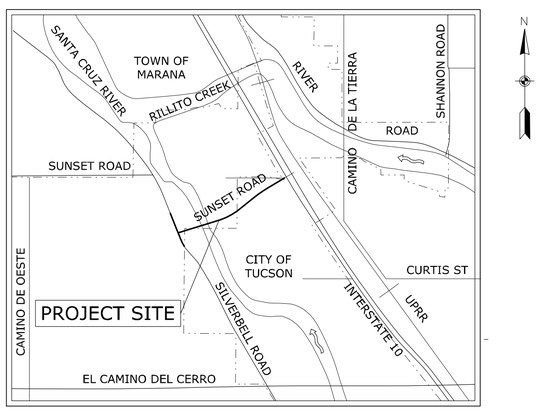

SHEET No.	DESCRIPTION
TEP1	COVER SHEET & LOCATION PLAN
TEP2	SURVEY INFORMATION
TEP3	DISTR UG ISOMETRIC PLAN
TEP4	DISTR UG PLAN AND PROFILE - SUNSET RD
TEP5	DISTR UG PLAN AND PROFILE - SUNSET RD
TEP6	DISTR UG PLAN AND PROFILE - SUNSET RD/SILVERBELL RD
TEP7	DISTR UG PLAN AND PROFILE - SUNSET RD

TUCSON ELECTRIC POWER (TEP) GENERAL NOTES FOR CIVIL CONSTRUCTION

1. ALL WORK SHALL BE PERFORMED IN ACCORDANCE WITH ALL APPLICABLE TEP CONSTRUCTION DRAWINGS, ELECTRIC SERVICE REQUIREMENTS (LATEST EDITION), CIVIL SPECIFICATIONS, GENERAL NOTES FOR CIVIL CONSTRUCTION, PRE-BID AND PRE-CON MINUTES, AND AGENCY PERMIT REQUIREMENTS. PER ALL APPLICABLE TEP ELECTRIC SERVICE REQUIREMENTS, INSPECTIONS ARE REQUIRED FOR A CONTRACTOR FOR ALL TEP CONSTRUCTION INCLUDING BUT NOT LIMITED TO: DUCT PER SR-205 / TRENCH PER SR-215, SITE PREPARATION FOR ALL EQUIPMENT PER SR-208 AND 209, CONCRETE FORMS (NOW REQUIRED TO LIMIT CONCRETE AROUND DUCT), CONCRETE POURS FOR ALL RISERS PER SR-220, FOR ALL PULL BOXES PER SR-225, AND FOR ALL VERTICAL SWEEPS PER SR-233 FIG. 1 (3Φ TRANSFORMERS AND CAPACITORS), ETC.

2. A 3 INCH CLEARANCE / SEPARATION IS REQUIRED BETWEEN TEP DUCTS AND FOR CONCRETE ENCASEMENT, DUCT CHAIRS OR SPACERS SHALL BE USED. CORE DRILLING INTO PULL BOXES MAY BE REQUIRED.

3. JOINT UTILITY TRENCH SHALL HAVE 1 FOOT SEPARATION BETWEEN TEP AND OTHER UTILITIES. CONTRACTOR SHALL COORDINATE WITH ALL UTILITIES IN THE JOINT TRENCH CROSS SECTION TO PREVENT CONFLICT WITH ANY EXISTING OR PROPOSED STRUCTURES.

4. IT IS THE CONTRACTOR'S RESPONSIBILITY TO SCHEDULE AN ONSITE PRECONSTRUCTION MEETING WITH TEP'S CONSTRUCTION MANAGER AND PERMITTING AGENCY PRIOR TO THE START OF CONSTRUCTION. THE CONTRACTOR SHALL MAINTAIN AND SUBMIT THE AGENCY REQUIRED CONSTRUCTION SCHEDULE.

5. PER SR-215, CONCRETE ENCASEMENT OF VERTICAL SWEEPS IS REQUIRED FOR DUCT RUNS OF MORE THAN 100 FEET IN LENGTH OR FOR ANY LENGTH WITH A COMBINATION OF MORE THAN 270° OF BENDS (BUT NOT TO EXCEED 360°). CONCRETE ENCASEMENT OF VERTICAL SWEEPS FOR RUNS LESS THAN 100 FEET IN LENGTH MAY NOT BE REQUIRED PER TEP FIELD TECHNICIAN. DUCT LEAVING PULL BOX REQUIRES A 2 FOOT MINIMUM TO 10 FOOT MAXIMUM STRAIGHT SECTION OF PVC SCHEDULE 40 SUPPLIED BY THE CONTRACTOR, ADAPTED TO HDPE AND THEN FORMED FOR CONCRETE COVER 10 FEET OUT FROM PULL BOX UNLESS NOTED OTHERWISE.

6. ANY CHANGES IN VERTICAL OR HORIZONTAL ANGLES FROM THE CONDUIT SHOWN ON THE PLAN AND PROFILE SHALL BE MADE GRADUALLY TO AVOID SIGNIFICANT INCREASE IN CABLE PULLING TENSIONS. ALL CONDUIT RUNS SHALL BE DESIGNED AND CHECKED SO AS NOT TO EXCEED ALLOWABLE PULLING TENSIONS AND ANY SUBSEQUENT SIGNIFICANT CHANGES SHALL BE RECHECKED BY DESIGN CONSULTANT ACCORDING TO TEP CABLE PULLING SOFTWARE.

7. TRENCHING AND BACKFILL SHALL BE ACCORDING TO SR-215, SR-207 AND TEP CIVIL SPECIFICATIONS. COMPACTION SHALL BE A MINIMUM OF 95% OF MAXIMUM DRY DENSITY AT OPTIMUM MOISTURE. SOIL TESTING WILL BE BY THIRD PARTY PROVIDED BY TEP. BACKFILL MATERIAL IN THE ROADWAY SECTION SHALL BE AS REQUIRED BY AGENCY.

8. HDPE CONDUIT, RISERS AND ALL FITTINGS, J1, J2, J6 SLEEVES, PRECAST CONCRETE MATERIAL ITEMS SUCH AS 1Φ AND 3Φ TRANSFORMER AND CAPACITOR PADS PER SR-233, PME BOX PADS PER SR-240, AND ASSOCIATED GROUND RODS SHALL BE SUPPLIED BY TEP AND DELIVERY COORDINATED BY THE CONTRACTOR UNLESS NOTED OTHERWISE.

9. CONTRACTOR IS REQUIRED TO PICK UP ALL TEP PROVIDED MATERIAL AT TEP IRVINGTON YARD LOCATED AT 4350 E. IRVINGTON ROAD AND TO RETURN ALL UNUSED PROVIDED MATERIAL TO SAME YARD. TEP FURNISHED MATERIAL LIST WILL BE PROVIDED AT PRE-BID MEETING. THE PROVIDED AT PRE-BID MEETING. THE CONTRACTOR IS RESPONSIBLE FOR THE SECURITY AND REPLACEMENT OF MATERIALS ONCE THEY ARE ISSUED TO THE CONTRACTOR.

10. CONTRACTOR WILL PROVIDE CONCRETE FOR ENCASEMENT PER DRAWING AND SPECIFICATIONS.

11. IT IS THE CONTRACTOR'S RESPONSIBILITY TO CONTACT BLUESTAKE PRIOR TO START OF ANY WORK. EXISTING UNDERGROUND ELECTRICAL FACILITIES AND OTHER UTILITIES LOCATIONS SHOWN ON THE CONSTRUCTION DRAWINGS ARE APPROXIMATE AND IT IS THE CONTRACTOR'S RESPONSIBILITY TO VERIFY LOCATION BY BLUESTAKE AND POTHOLING AT THE TIME OF CONSTRUCTION.

12 IT IS THE CONTRACTOR'S RESPONSIBILITY TO CONTACT TEP PRIOR TO ANY WORK BEING PERFORMED IN CLOSE PROXIMITY TO TEP OVERHEAD CONDUCTORS OR POLES. OVERHEAD PROTECTION OR EXCAVATION PROTECTION SHALL BE SCHEDULED IN ADVANCE AND IS BILLABLE TO THE CONTRACTOR. PLEASE SEE TEP WEB SITE FOR MORE INFORMATION AT WWW.TEP.COM/BUSINESS/CONSTRUCTION/FACILITIES.ASP.

13. TEP RESERVES THE RIGHT TO REQUIRE THE CONTRACTOR TO INSTALL LOCATABLE 'TONE TAPE' PER SR-205. CONTRACTOR SHALL PROVIDE ONE #12 RED STRANDED TRACER WIRE TO BE LAID IN THE TRENCH WITH THE CONDUIT.

14. CONTRACTOR IS RESPONSIBLE TO ASSURE ALL APPROPRIATE PERMITS ARE OBTAINED, VALID AND AVAILABLE AT THE JOB SITE. CONTRACTOR WILL PROVIDE CIVIL CONSTRUCTION PERMITS INCLUDING BUT NOT LIMITED TO PIMA COUNTY AIR POLLUTION PERMIT AND AN APPROVED AGENCY TRAFFIC CONTROL PLAN. CONTRACTOR WILL COMPLY WITH ALL APPLICABLE LAWS, PERMIT REQUIREMENTS, INCLUDING BEST MANAGEMENT PRACTICES FOR STORMWATER POLLUTION PREVENTION AND NATIVE PLANT PRESERVATION.

15. CONTRACTOR SHALL BE RESPONSIBLE FOR REMOVAL AND REPLACEMENT OF EXISTING STRUCTURES, UTILITIES, PAVING AND OTHER ROADWAY FEATURES. ALL REPAIRS SHALL CONFORM TO APPLICABLE PCDOT STANDARDS.

16. CONTRACTOR SHALL PROTECT AND SUPPORT EXISTING TEP ENERGIZED FACILITIES AND ALL NEW TEP INSTALLATIONS DURING ANY SUBSEQUENT CONSTRUCTION ACTIVITIES.

17. CONTRACTOR MUST PROVIDE TEP COMPLETE, LEGIBLE, AS-BUILT DRAWINGS.

18 ANY WORK DEEMED BY THE CONTRACTOR TO BE 'EXTRA WORK' THAT IS NOT DEFINED IN THE CONTRACT DOCUMENTS MUST BE BROUGHT TO THE ATTENTION OF THE CONSTRUCTION MANAGER PRIOR TO PROCEEDING WITH THE WORK. DO NOT PROCEED WITH ANY OUT OF SCOPE WORK UNTIL APPROVAL OF CHANGES ARE RECEIVED IN WRITING. FAILURE TO ADHERE TO THE ABOVE WILL INDICATE THAT THE WORK IN QUESTION IS NOT "EXTRA WORK" AND WILL BE AT THE CONTRACTOR'S EXPENSE.

19. CONTRACTOR WILL RETURN TO JOBSITE TO WORK WITH TEP CREW TO ASSIST WITH CUTOVERS TO NEW EQUIPMENT AND FACILITIES. THIS INCLUDES, BUT IS NOT LIMITED TO: TRENCH AND EXPOSE EXISTING CONDUIT / CIC AND SWING INTO NEW CABINET(S), BREAK INTO CONDUIT, INSTALL SWEEPS INTO NEW CABINETS, BACKFILL AND MANDREL, ETC. TEP CONSTRUCTION MANAGER WILL COORDINATE THIS WORK AFTER TEP ELECTRICAL INSTALLATION HAS OCCURRED.

20. SOME WORK AT THE CONSTRUCTION SITE WILL BE PERFORMED BY OTHERS. THOSE INDIVIDUALS WILL NEED TO HAVE ACCESS TO THE SITE TO PERFORM THEIR CONTRACTED WORK. THE CONTRACTOR WILL MAKE EVERY EFFORT TO WORK WITH AND PROVIDE ACCESS AT NO ADDITIONAL CHARGE.

21. CONTRACTOR IS REQUIRED TO NOTIFY ALL LOCAL RESIDENTS OF ACCESS LIMITATIONS DURING CONSTRUCTION.

22. CONTRACTOR IS TO CONDUCT A DAILY 'TAIL BOARD' WITH CREW AND ALL OFFICIAL VISITORS TO THE JOB SITE, COMPLETE AND SUBMIT TAIL BOARD FORMS TO TEP UPON COMPLETION OF THE PROJECT.

23. SCHEDULING AND WORKING NEAR AND UNDER ENERGIZED LINES WILL REQUIRE COORDINATION WITH TEP'S CONSTRUCTION MANAGER. CONSTRUCTION MANAGER MUST GIVE CONSENT AND BE PRESENT WHILE WORKING NEAR OVERHEAD LINES AND ALWAYS RESERVES THE RIGHT TO SHUT THE PROJECT DOWN AND / OR MAKE CHANGES.

24. CONTRACTOR SHALL PERFORM THE WORK IN A PROPER, SAFE AND SECURE MANNER TO PREVENT LOSS, INJURY OR DAMAGE TO THE OWNER'S PROPERTY OR THE ADJACENT PREMISES AND TO LIVES OF PERSONS AND SHALL COMPLY WITH ALL APPLICABLE SAFETY LAWS, RULES AND REGULATIONS OF ANY GOVERNMENTAL AUTHORITY INCLUDING ARIZONA BLUE STAKE AND THOSE CONTAINED IN OR ISSUED PURSUANT TO THE OCCUPATIONAL SAFETY AND HEALTH ACT OF 1970, AS AMENDED.

25. THE BASIS OF BEARING FOR THIS PROJECT IS A GRID BEARING OF N55°56'26"E BETWEEN PIMA COUNTY DOT/CITY OF TUCSON DOT GEODETIC, CONTROL POINT A103 AND PIMA COUNTY DOT/CITY OF TUCSON DOT GEODETIC, CONTROL POINT AG09, AS ESTABLISHED FROM THE ARIZONA COORDINATE SYSTEM, 1983 (HARN 92), CENTRAL ZONE 0202.

26. BASIS OF ELEVATION: VERTICAL CONTROL FOR THIS PROJECT IS BASED ON PIMA COUNTY BENCHMARK DESIGNATION Q291 AKA NGS Q291 CS055R. BASED ON NAVD 88 DATUM HAVING AN ELEVATION OF 2,232.24 FEET. STATION MARK IS A BENCHMARK DISK SET IN CONCRETE STAMPED Q291 1951.

27. ALL STATIONS AND OFFSETS ARE FROM SUNSET RD CONSTRUCTION ℄ UNLESS OTHERWISE NOTED.

BEING REVISED / UNDER CONSTRUCTION
R.E. S. GARCIA/AECOM JOB # ____
TECH./DFTR. ____ REV. # 00
CHECK WITH R.E. BEFORE PRINTING OR REVISING

SHEET 197 OF 203

REVISIONS

00
ISSUED FOR CONSTRUCTION
DATE: 10/2015
R.E.: S. GARCIA
PREP.: R. MURRIETA
APPR.:
W.R.# XXXXXX & XXXXXX
BY: AECOM

SCALE FACTOR: N/A
CONTRACTED ENG: AECOM DATE 10/2015
ENGINEERING TECH: R. MURRIETA DATE 10/2015
PROJECT ENGINEER: C. ROBINSON DATE 10/2015
TUCSON ELECTRIC APPROVAL: DATE

Registered Professional Engineer (CIVIL) CERTIFICATE NO. 33452 CHARLES J. ROBINSON STATE OF ARIZONA DATE SIGNED 10/9/15 EXPIRES 3-31-2017

AUTOCADD

Tucson Electric Power Company
TUCSON, ARIZONA

Tucson Electric Power

TITLE: COVER SHEET & LOCATION PLAN
DISTRIBUTION UNDERGROUND - SUNSET RD
SILVERBELL RD TO I-10 EBFR
PUBLIC IMPROVEMENTS

TRSQT13S,R13E,
S8,17,18

REV 00 | CODE XXXX | TYPE

SHEET TEP1

PLOTTED BY: MurrietaR
Date Plotted: 11/13/2015
Time Plotted: 10:53:54 AM
Filename: P:\60311412 Sunset Rd\900-Work\910-CAD\20-SHEETS\4RTSUN_TEPCvr_segl.dgn

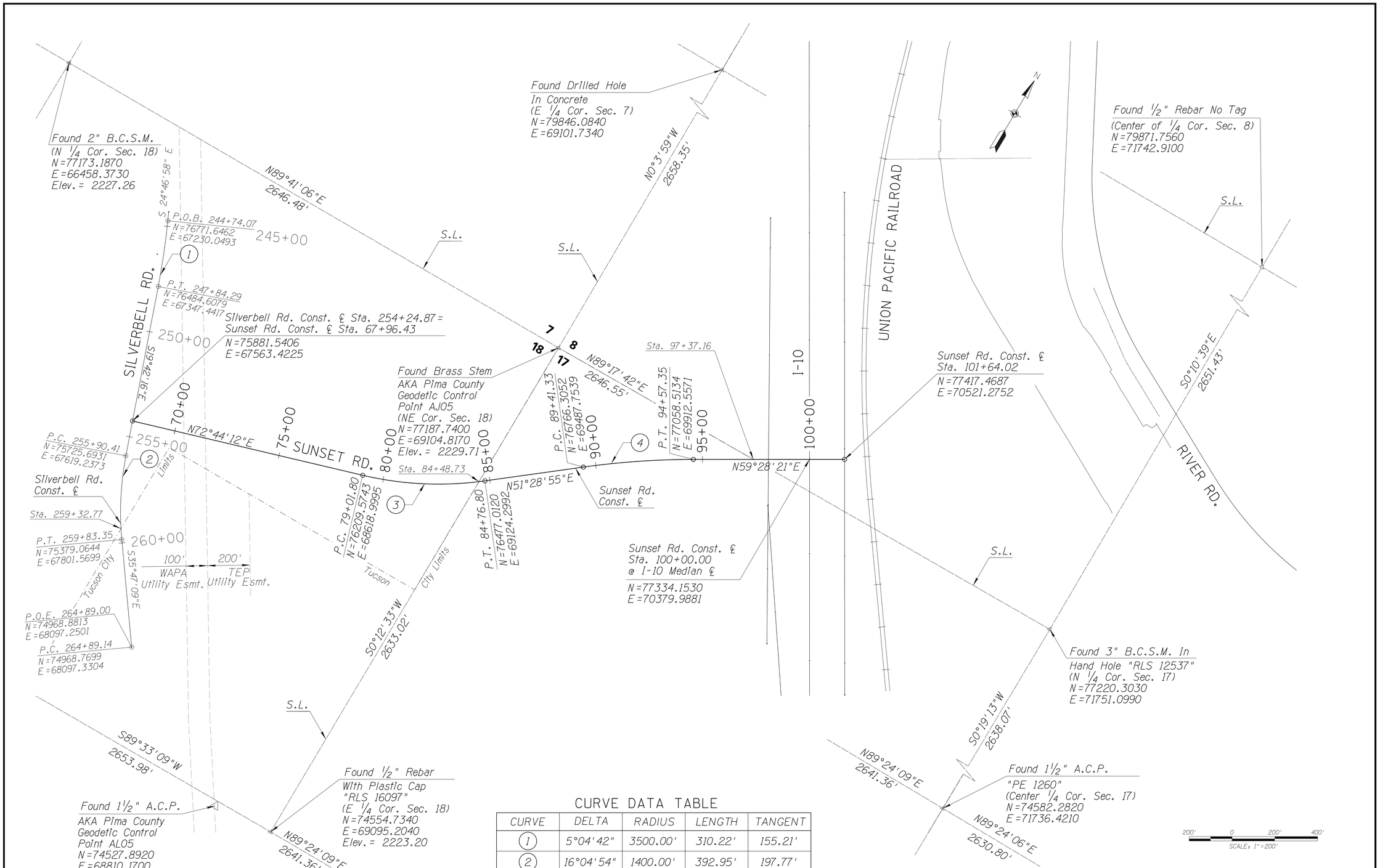

CURVE DATA TABLE

CURVE	DELTA	RADIUS	LENGTH	TANGENT
1	5°04'42"	3500.00'	310.22'	155.21'
2	16°04'54"	1400.00'	392.95'	197.77'
3	21°15'18"	1550.00'	575.00'	290.84'
4	7°59'27"	3700.00'	516.02'	258.43'

Call at least two full working days before you being excavation.
ARIZONA 811
Arizona Blue Stake, Inc.
Dial 8-1-1 or 1-800- STAKE-IT (782-5348)
In Maricopa County: (602)263-1100

BEING REVISED / UNDER CONSTRUCTION
R.E. S. GARCIA/AECOM JOB # ____
TECH./DFTR. ____ REV. # 00
CHECK WITH R.E. BEFORE PRINTING OR REVISING

SCALES HORIZ. 1"=100' VERT. N/A

SHEET 198 OF 203

REVISIONS

00
ISSUED FOR CONSTRUCTION
DATE: 10/2015
R.E.: S. GARCIA
PREP.: R. MURRIETA
APPR.:
WR: XXXXXX
BY: AECOM

SCALE FACTOR: ____
CONTRACTOR (ENG): AECOM DATE 1/2015
ENGINEERING TECH: R. MURRIETA DATE 10/2015
PROJECT ENGINEER: C. ROBINSON DATE 10/2015
ENGINEER APPROVAL: ____ DATE ____

Registered Professional Engineer (Civil) CERTIFICATE NO. 33452 CHARLENE A. ROBINSON STATE OF ARIZONA DATE SIGNED 10/16/15 ARIZONA U.S.A. EXPIRES 12-31-2017

AUTOCADD

Tucson Electric Power Company
TUCSON, ARIZONA

Tucson Electric Power

TITLE: SURVEY INFORMATION
HORIZONTAL CONTROL PLAN
SUNSET RD: SILVERBELL RD TO I-10 EBFR

TRSQ T13S,R13E,
S8,17,18

REV 00 CODE XXXX

SHEET TEP2

PLOTTED BY: MurrietaR
Date Plotted: 11/13/2015
Time Plotted: 10:54:31 AM
Filename: P:\60311412 Sunset Rd\900-Work\910-CAD\20-SHEETS\4RTSUN_TEP01hc_seg1.dgn

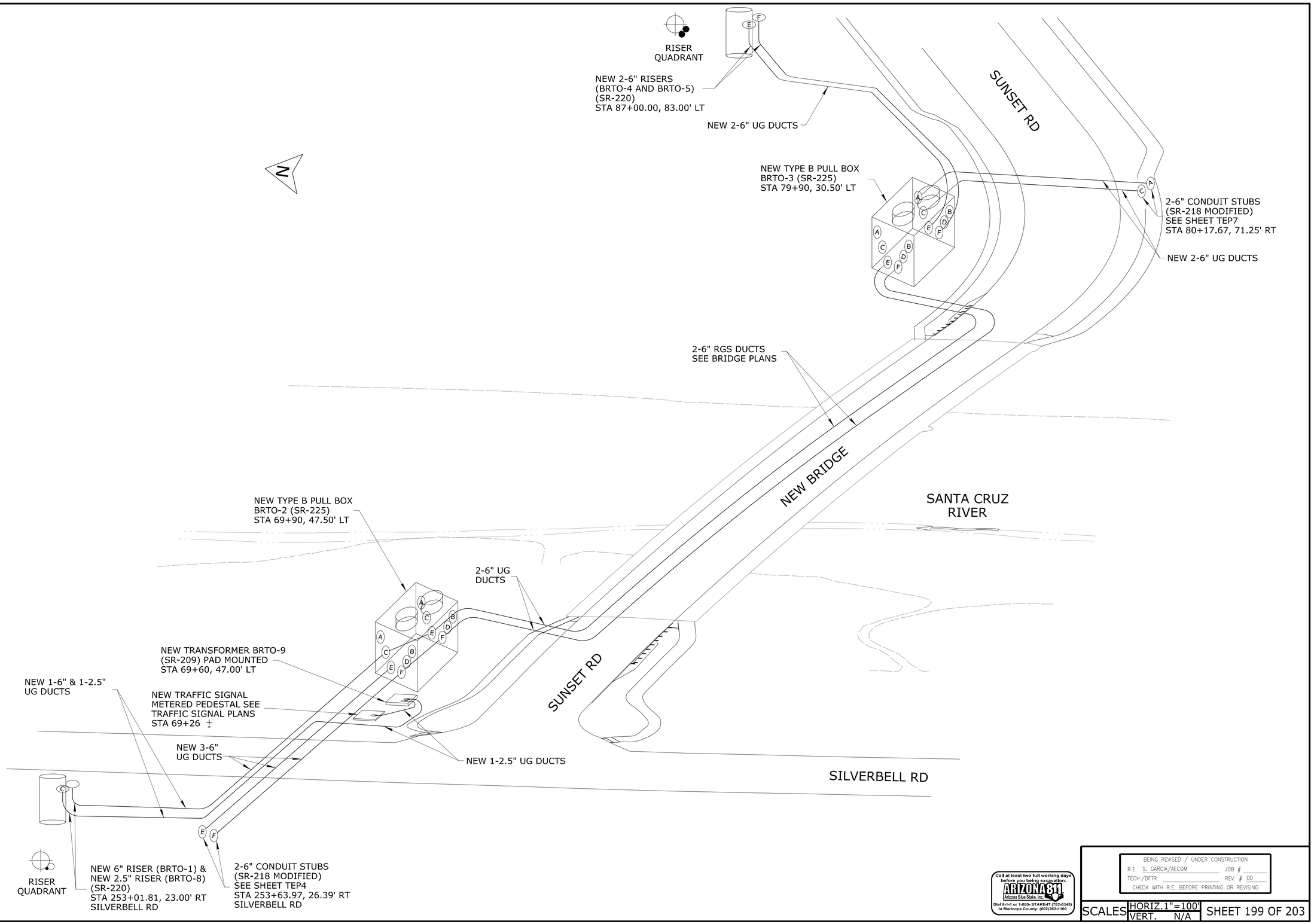

Call at least two full working days before you being excavation.
ARIZONA 811
Arizona Blue Stake, Inc.
Dial 8-1-1 or 1-800- STAKE-IT (782-5348)
In Maricopa County: (602)263-1100

BEING REVISED / UNDER CONSTRUCTION
R.E. S. GARCIA/AECOM JOB # _____
TECH./DFTR. _____ REV. # 00
CHECK WITH R.E. BEFORE PRINTING OR REVISING

SCALES HORIZ. 1"=100' VERT. N/A

SHEET 199 OF 203

REVISIONS

00
ISSUED FOR CONSTRUCTION
DATE: 10/2015
R.E.: S. GARCIA
PREP.: R. MURRIETA
APPR.:
WR: XXXXXX
BY: AECOM

SCALE FACTOR: _____
CONTRACTED ENG: AECOM DATE 04/2013
ENGINEERING TECH: M. VARUSO DATE 04/2013
PROJECT ENGINEER: E. GRIFFITH-SHETTY DATE 04/2013
ENGINEER APPROVAL: _____ DATE _____

Registered Professional Engineer (Civil) CERTIFICATE NO. 33452 CHARLENE A. ROBINSON ARIZONA U.S.A.
Feb 9 15 14:40 2015
DATE Signed
EXPIRES 3-31-2017

AUTOCADD

Tucson Electric Power Company
TUCSON, ARIZONA

TITLE: DISTRIBUTION UNDERGROUND ISOMETRIC PLAN
SUNSET RD: SILVERBELL RD TO I-10 EBFR

TRSQ T13S,R13E
S8, 17, 18
REV 00 CODE XXXX
SHEET TEP3

Filename: P:\60311412 Sunset Rd\900-Work\910-CAD\20-SHEETS\4RTSUN_TEP02.seg1.dgn Time Plotted: 1:48:41 PM Date Plotted: 11/13/2015 PLOTTED BY: MurrietaR

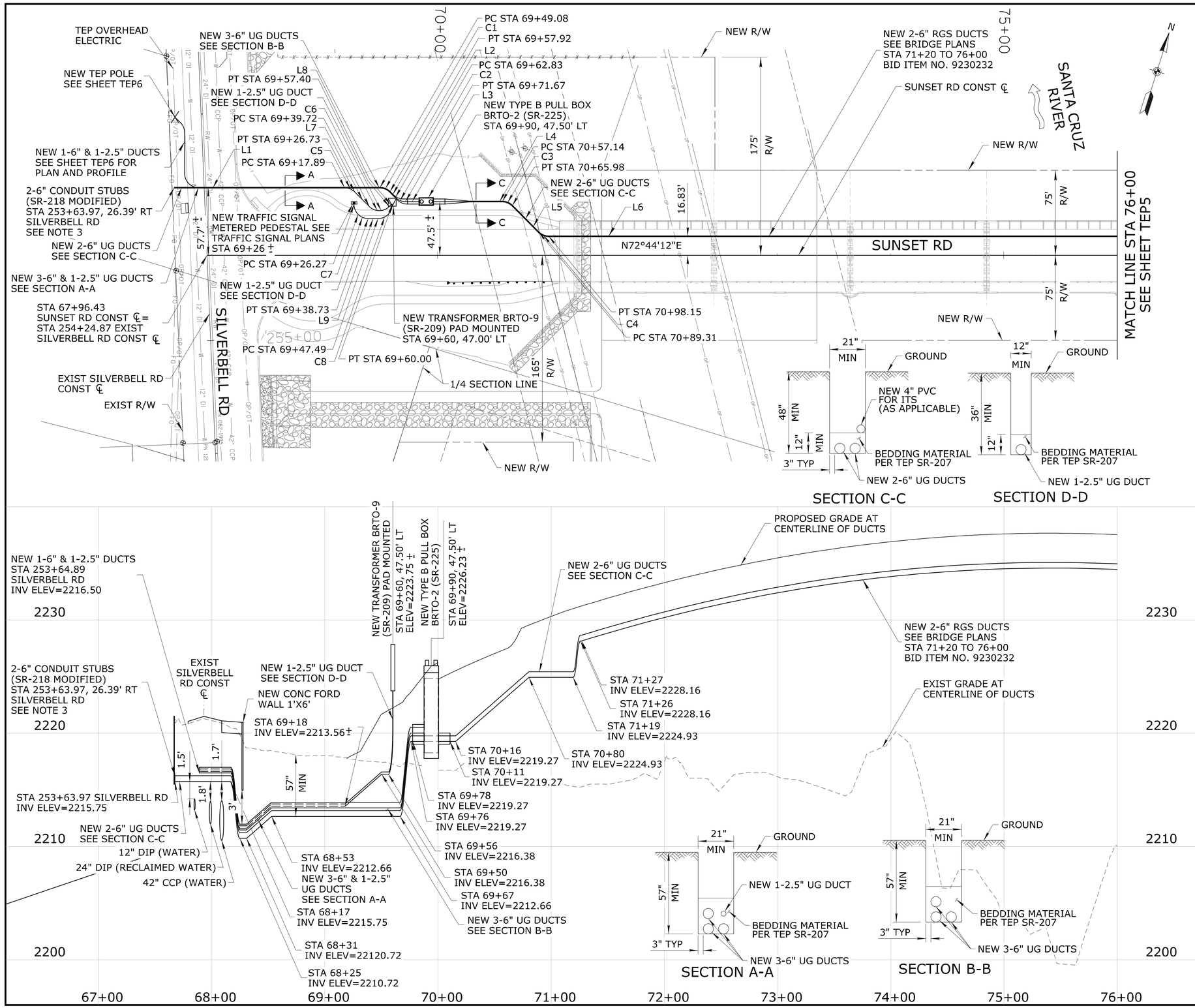

OP	OVERHEAD POWER
FO	FIBER OPTIC
W 42" CCP	42" CCP WATER
RW 24" DI	24" DI RECLAIMED WATER
W 12" DI	12" DI WATER
OT	OVERHEAD TELEPHONE
OP/OT	OVERHEAD POWER / OVERHEAD TELEPHONE
12" PVC W	12" PVC WATER
8" PVC W	8" PVC WATER
	ITS
	RIGHT OF WAY
	ACCESS CONTROL
X	FENCE
	TEP CONDUIT
	EASEMENT

NEW ELECTRIC TANGENT DATA		
NO.	BEARING	LENGTH
L1	N 72°44'12" E	181.61'
L2	S 62 15'48" E	6.95'
L3	N 72°44'12" E	11.81'
L4	N 72°44'12" E	60.66'
L5	S 62°15'48" E	32.99'
L6	N 72°44'12" E	501.85'
L7	S 62°15'48" E	18.37'
L8	N 27°44'12" E	3.09'
L9	N 72°54'17" E	8.76'

NEW ELECTRIC CURVE DATA			
NO.	DELTA	ARC	RADIUS
C1	45°00'00"	9.82'	12.50'
C2	45°00'00"	9.82'	12.50'
C3	45°00'00"	9.82'	12.50'
C4	45°00'00"	9.82'	12.50'
C5	45°00'00"	9.82'	12.50'
C6	90 00'00"	19.63'	12.50'
C7	90°00'00"	19.63'	12.50'
C8	90°00'00"	19.63'	12.50'

NOTES:

1. ALL STATIONS AND OFFSETS ARE REFERENCED FROM SUNSET RD CONST ℄ UNLESS OTHERWISE NOTED.
2. ONE FOOT MINIMUM SEPARATION IS REQUIRED BETWEEN NEW ELECTRIC CONDUITS AND NEW AND EXISTING UTILITIES UNLESS OTHERWISE NOTED.
3. SR-218 IS MODIFIED TO EXTEND THE VERTICAL CONDUIT TO 6 INCHES ABOVE THE GROUND LEVEL AND CAPPED. TRACER WIRE SHALL BE INSTALLED ALONG THE OUTSIDE OF THE VERTICAL CONDUIT THE LENGTH OF THE CONDUIT AND ON THE SIDE WHERE THE UNDERGROUND CONDUIT IS STUBBED.

Call at least two full working days before you being excavation.
ARIZONA 811
Arizona Blue Stake, Inc.
Dial 8-1-1 or 1-800- STAKE-IT (782-5348)
In Maricopa County: (602)263-1100

BEING REVISED / UNDER CONSTRUCTION
R.E. S. GARCIA/AECOM JOB # ____
TECH./DFTR. ____ REV. # 00
CHECK WITH R.E. BEFORE PRINTING OR REVISING

SCALES HORIZ. 1"=40' VERT. 1"=4'

SHEET 200 OF 203

REVISIONS

DATE	ENG	TECH	REV

DESCRIPTION:

ISSUED FOR CONSTRUCTION
DATE: 11/2015
R.E.: S. GARCIA
PREP.: R. MURRIETA
APPR.:
WR: XXXXXX
BY: AECOM

SCALE FACTOR: ____
CONTRACTED ENG: AECOM DATE 11/2015
ENGINEERING TECH: R. MURRIETA DATE 11/2015
PROJECT ENGINEER: C. ROBINSON DATE 11/2015
ENGINEER APPROVAL: ____ DATE ____

Registered Professional Engineer (Civil) CERTIFICATE NO. 33462 HARLENE ROBINSON
EXPIRES 3-31-2017

AUTOCADD

Tucson Electric Power Company
TUCSON, ARIZONA

TITLE: DISTRIBUTION UNDERGROUND PLAN AND PROFILE SUNSET RD: SILVERBELL RD TO I-10 EBFR

TRSQ T13S,R13E
S 8, 17, 18
REV 00 CODE XXXX
SHEET TEP4

Filename: P:\60311412 Sunset Rd\900-Work\910-CAD\20-SHEETS\4RTSUN_TEP03_segl.dgn Time Plotted: 1:49:40 PM Date Plotted: 11/13/2015 PLOTTED BY: MurrietaR

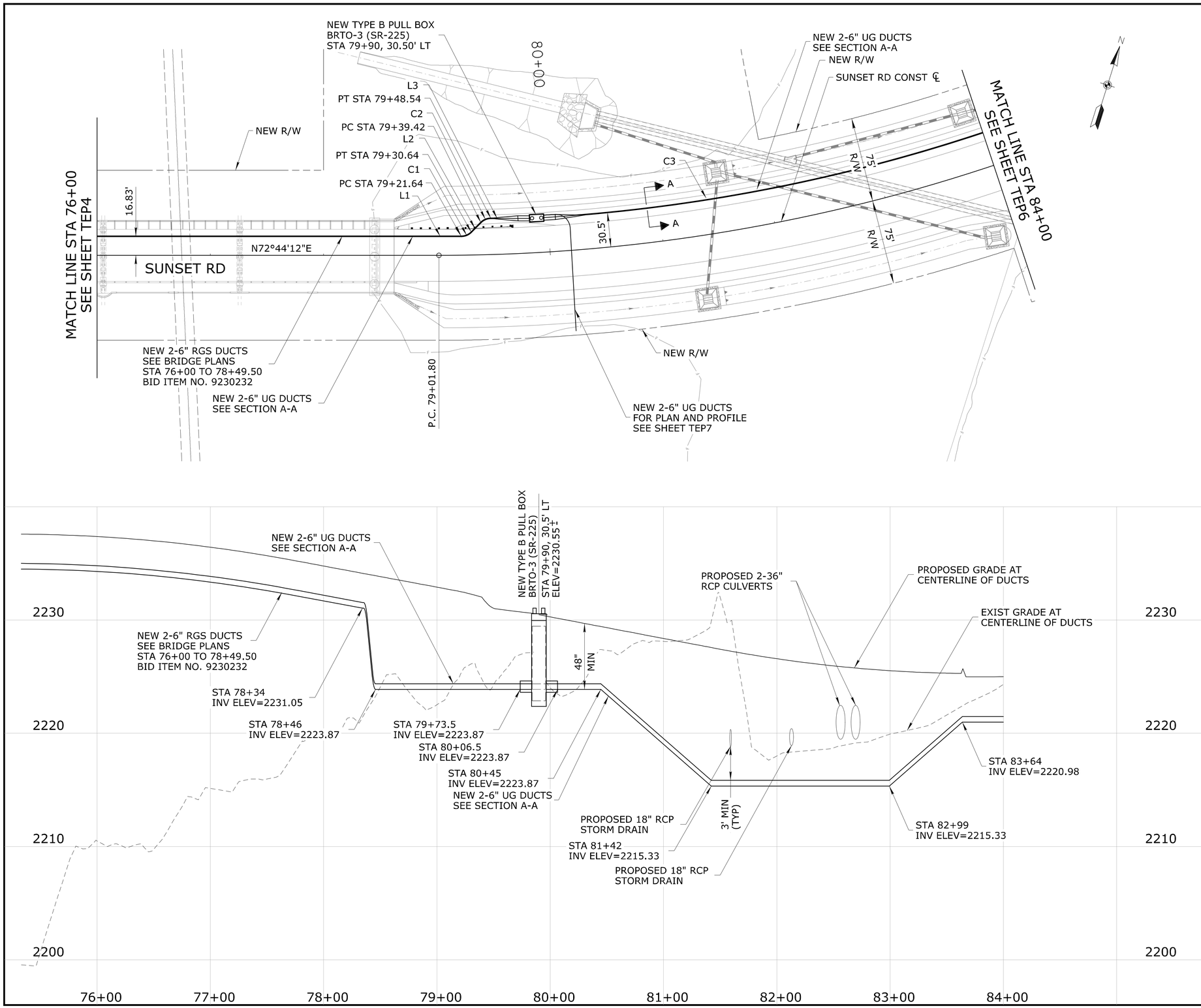

OP	OVERHEAD POWER
FO	FIBER OPTIC
W 42" CCP	42" CCP WATER
RW 24" DI	24" DI RECLAIMED WATER
W 12" DI	12" DI WATER
OT	OVERHEAD TELEPHONE
OP/OT	OVERHEAD POWER / OVERHEAD TELEPHONE
12" PVC W	12" PVC WATER
8" PVC W	8" PVC WATER
	ITS
	RIGHT OF WAY
	ACCESS CONTROL
–X– –X– –X–	FENCE
	TEP CONDUIT
	EASEMENT

NEW ELECTRIC TANGENT DATA		
NO.	BEARING	LENGTH
L1	N 72°44'12" E	321.42'
L2	N 27°44'12" E	11.97'
L3	S 72°44'12" E	33.96'

NEW ELECTRIC CURVE DATA			
NO.	DELTA	ARC	RADIUS
C1	45°00'00"	9.82'	12.50'
C2	45°00'00"	9.82'	12.50'
C3	17°45'25"	470.92'	1519.50'

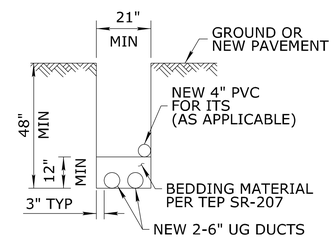

SECTION A-A

NOTES:
1. ALL STATIONS AND OFFSETS ARE REFERENCED FROM SUNSET RD CONST ℄ UNLESS OTHERWISE NOTED.
2. ONE FOOT MINIMUM SEPARATION IS REQUIRED BETWEEN NEW ELECTRIC CONDUITS AND NEW AND EXISTING UTILITIES UNLESS OTHERWISE NOTED.

Call at least two full working days before you being excavation.
ARIZONA 811
Arizona Blue Stake, Inc.
Dial 8-1-1 or 1-800- STAKE-IT (782-5348)
In Maricopa County: (602)263-1100

BEING REVISED / UNDER CONSTRUCTION
R.E. S. GARCIA/AECOM JOB # _____
TECH./DFTR. _____ REV. # 00
CHECK WITH R.E. BEFORE PRINTING OR REVISING

SCALES HORIZ. 1"=40' VERT. 1"=4'

SHEET 201 OF 203

REVISIONS

DATE	ENG	TECH	REV

DESCRIPTION:

ISSUED FOR CONSTRUCTION
DATE: 11/2015
R.E.: S. GARCIA
PREP.: R. MURRIETA
APPR.:
WR: XXXXXX
BY: AECOM

SCALE FACTOR: _____
CONTRACTED ENG: AECOM DATE 11/2015
ENGINEERING TECH: R. MURRIETA DATE 11/2015
PROJECT ENGINEER: C. ROBINSON DATE 11/2015
ENGINEER APPROVAL: _____ DATE _____

Registered Professional Engineer (Civil)
CERTIFICATE NO. 33452
CHARLES ROBINSON
ARIZONA U.S.A.
Date Signed 5-31-2017
EXPIRES 3-31-2017

AUTOCADD

Tucson Electric Power Company
TUCSON, ARIZONA

TITLE: DISTRIBUTION UNDERGROUND
PLAN AND PROFILE
SUNSET RD: SILVERBELL RD TO I-10 EBFR

TRSQ T13S,R13E
S 8, 17, 18
REV 00 CODE XXXX
SHEET TEP5

PLOTTED BY: MurrietaR
Date Plotted: 11/13/2015
Time Plotted: 1:50:53 PM
Filename: P:\60311412 Sunset Rd\900-Work\910-CAD\20-SHEETS\4RTSUN_TEP04_seg1.dgn

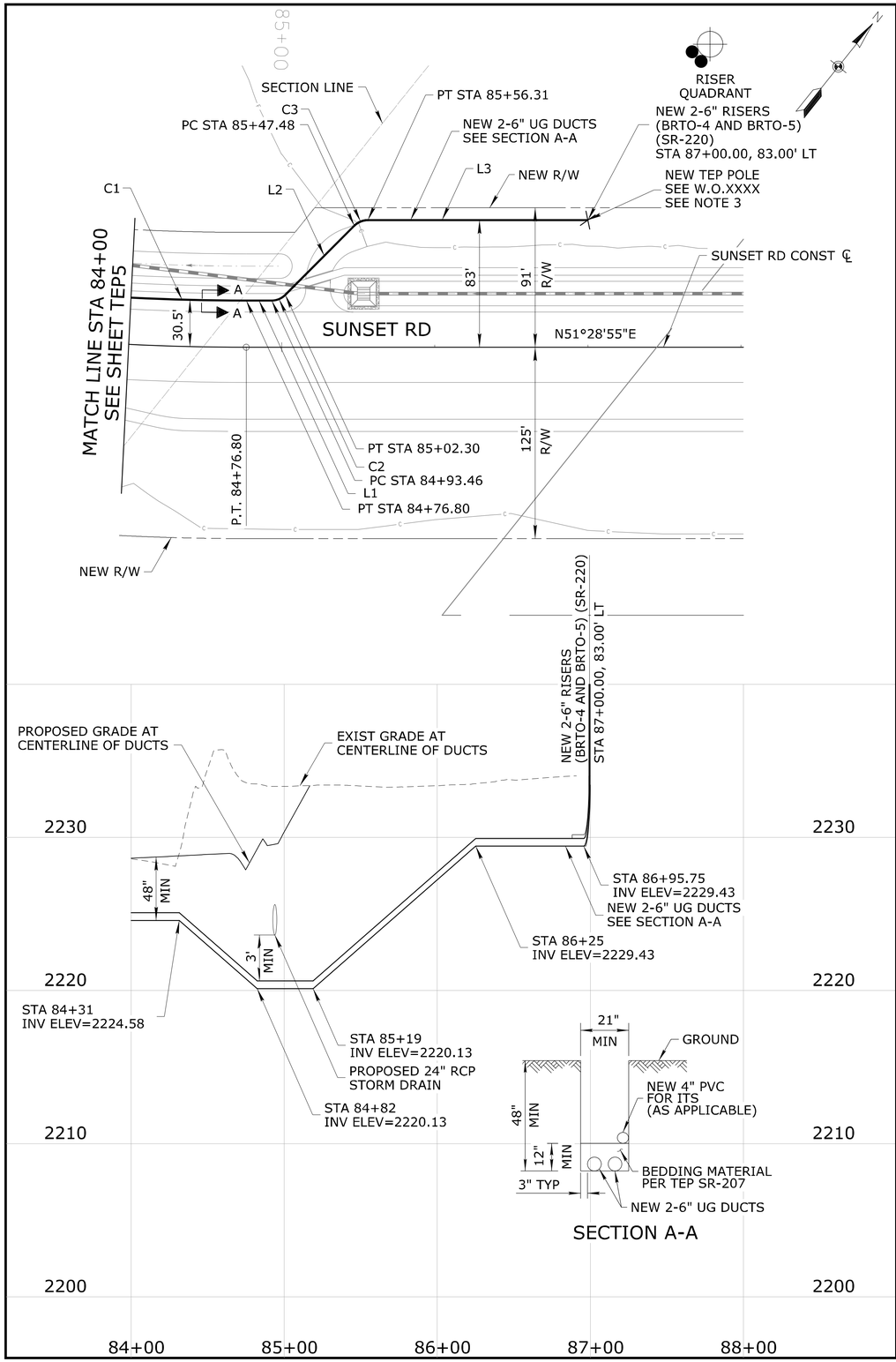

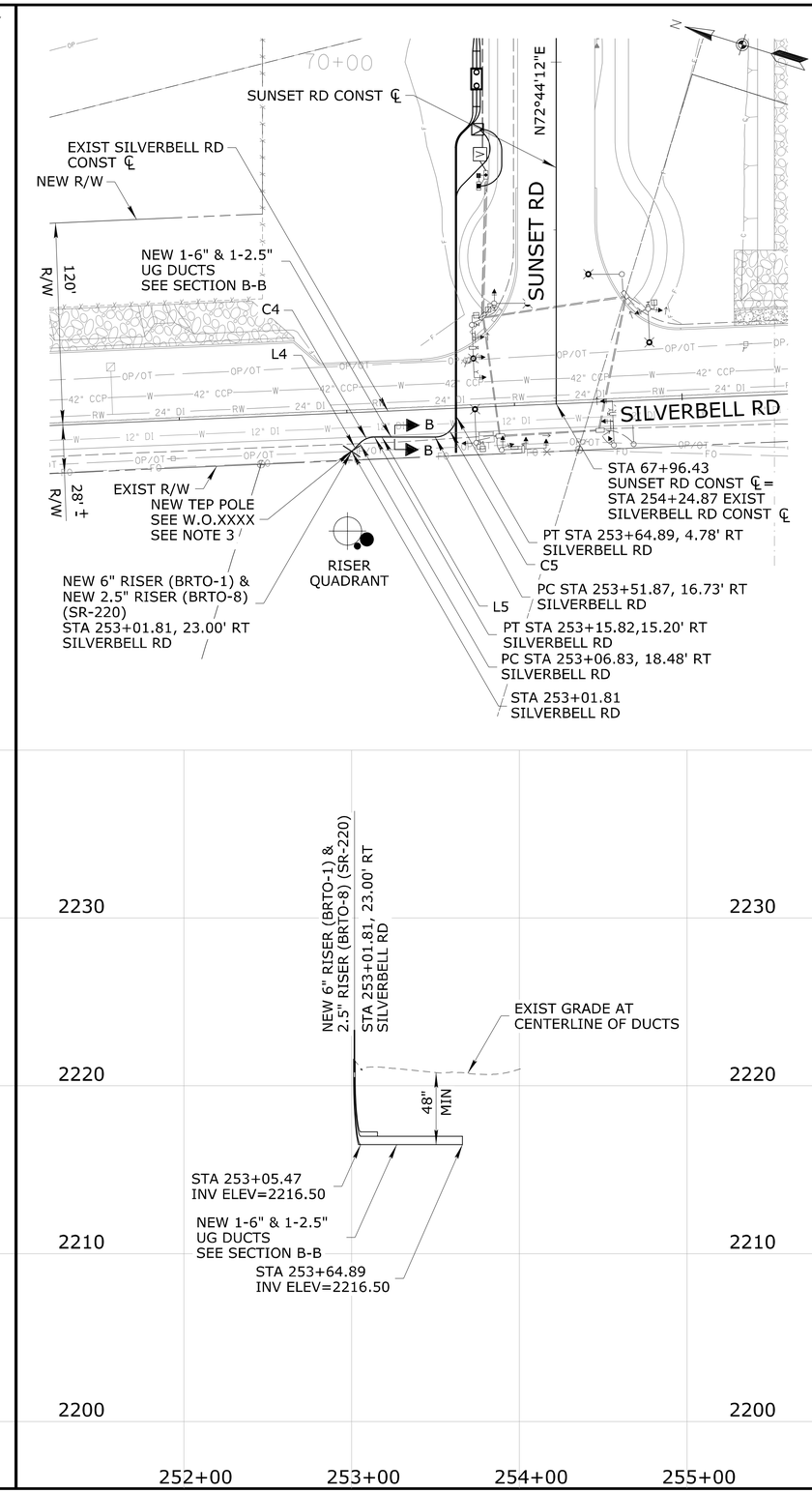

OP	OVERHEAD POWER
FO	FIBER OPTIC
W 42" CCP	42" CCP WATER
RW 24" DI	24" DI RECLAIMED WATER
W 12" DI	12" DI WATER
OT	OVERHEAD TELEPHONE
OP/OT	OVERHEAD POWER / OVERHEAD TELEPHONE
12" PVC W	12" PVC WATER
8" PVC W	8" PVC WATER
	ITS
	RIGHT OF WAY
	ACCESS CONTROL
	FENCE
	TEP CONDUIT
	EASEMENT

NEW ELECTRIC TANGENT DATA		
NO.	BEARING	LENGTH
L1	N 51°28'55" E	16.66'
L2	N 06°28'55" E	63.89'
L3	N 51°28'55" E	143.69'
L4	S 62°15'48" E	6.82'
L5	S 17°15'48" E	36.09'

NEW ELECTRIC CURVE DATA			
NO.	DELTA	ARC	RADIUS
C1	17°45'25"	470.92'	1519.50'
C2	45°00'00"	9.82'	12.50'
C3	45°00'00"	9.82'	12.50'
C4	45°00'00"	9.82'	12.50'
C5	90°00'00"	19.63'	12.50'

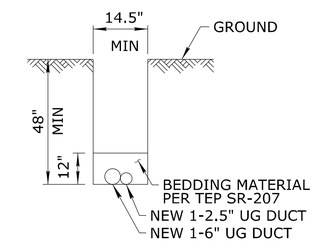

SECTION B-B

NOTES:
1. ALL STATIONS AND OFFSETS ARE REFERENCED FROM SUNSET RD CONST ℄ UNLESS OTHERWISE NOTED.
2. ONE FOOT MINIMUM SEPARATION IS REQUIRED BETWEEN NEW ELECTRIC CONDUITS AND NEW AND EXISTING UTILITIES UNLESS OTHERWISE NOTED.
3. CONTRACTOR TO TRENCH/INSTALL DUCT AND EQUIPMENT, AND BACKFILL, AS NECESSARY TO ASSIST TEP CREW OR TEP ELECTRICAL CONTRACTOR TO BREAK INTO OR SWING UGE CABLE AND DUCT INTO EXISTING AND NEW EQUIPMENT, CONDUIT AND RISERS.

Call at least two full working days before you begin excavation.
ARIZONA 811
Arizona Blue Stake, Inc.
Dial 8-1-1 or 1-800- STAKE-IT (782-5348)
In Maricopa County: (602)263-1100

BEING REVISED / UNDER CONSTRUCTION
R.E. S. GARCIA/AECOM JOB # ____
TECH./DFTR. ____ REV. # 00
CHECK WITH R.E. BEFORE PRINTING OR REVISING

SCALES HORIZ. 1"=40' VERT. 1"=4'

SHEET 202 OF 203

REVISIONS

DATE	ENG	TECH	REV

DESCRIPTION:

ISSUED FOR CONSTRUCTION
DATE: 11/2015
R.E.: S. GARCIA
PREP.: R. MURRIETA
APPR.:
WR: XXXXXX
BY: AECOM

SCALE FACTOR: ____
CONTRACTED ENG: AECOM DATE 11/2015
ENGINEERING TECH: R. MURRIETA DATE 11/2015
PROJECT ENGINEER: C. ROBINSON DATE 11/2015
ENGINEER APPROVAL: ____ DATE ____

Registered Professional Engineer (Civil) CERTIFICATE NO. 33462 MARLENE ROBINSON-J. STATE OF ARIZONA DATE SIGNED 11/13/15 EXPIRES 3-31-2017

AUTOCADD

Tucson Electric Power Company
TUCSON, ARIZONA

TITLE: DISTRIBUTION UNDERGROUND
PLAN AND PROFILE
SUNSET RD: SILVERBELL RD TO I-10 EBFR

TRSQ T13S,R13E
S 8, 17, 18
REV 00 CODE xxxx
SHEET TEP6

Filename: P:\60311412 Sunset Rd\900-Work\910-CAD\20-SHEETS\4RTSUN_TEP05.segl.dgn Time Plotted: 1:51:32 PM
Date Plotted: 11/13/2015 PLOTTED BY: MurrietaR

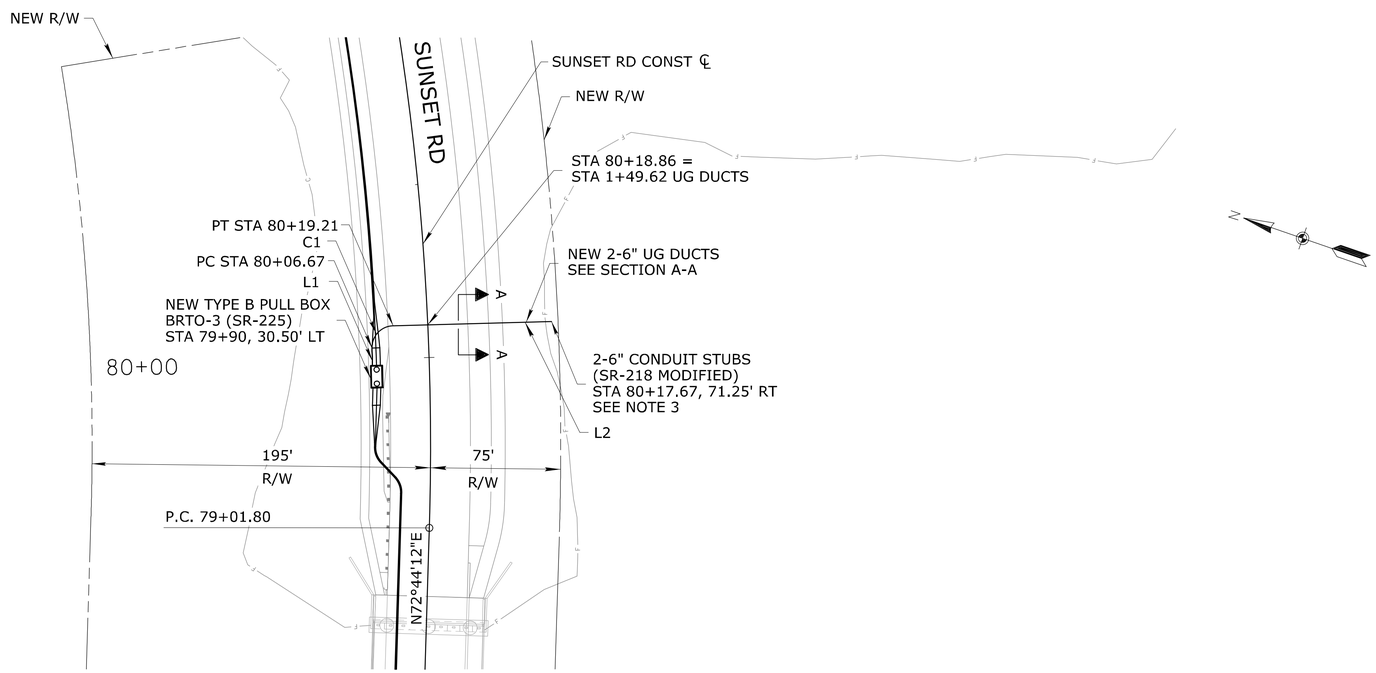

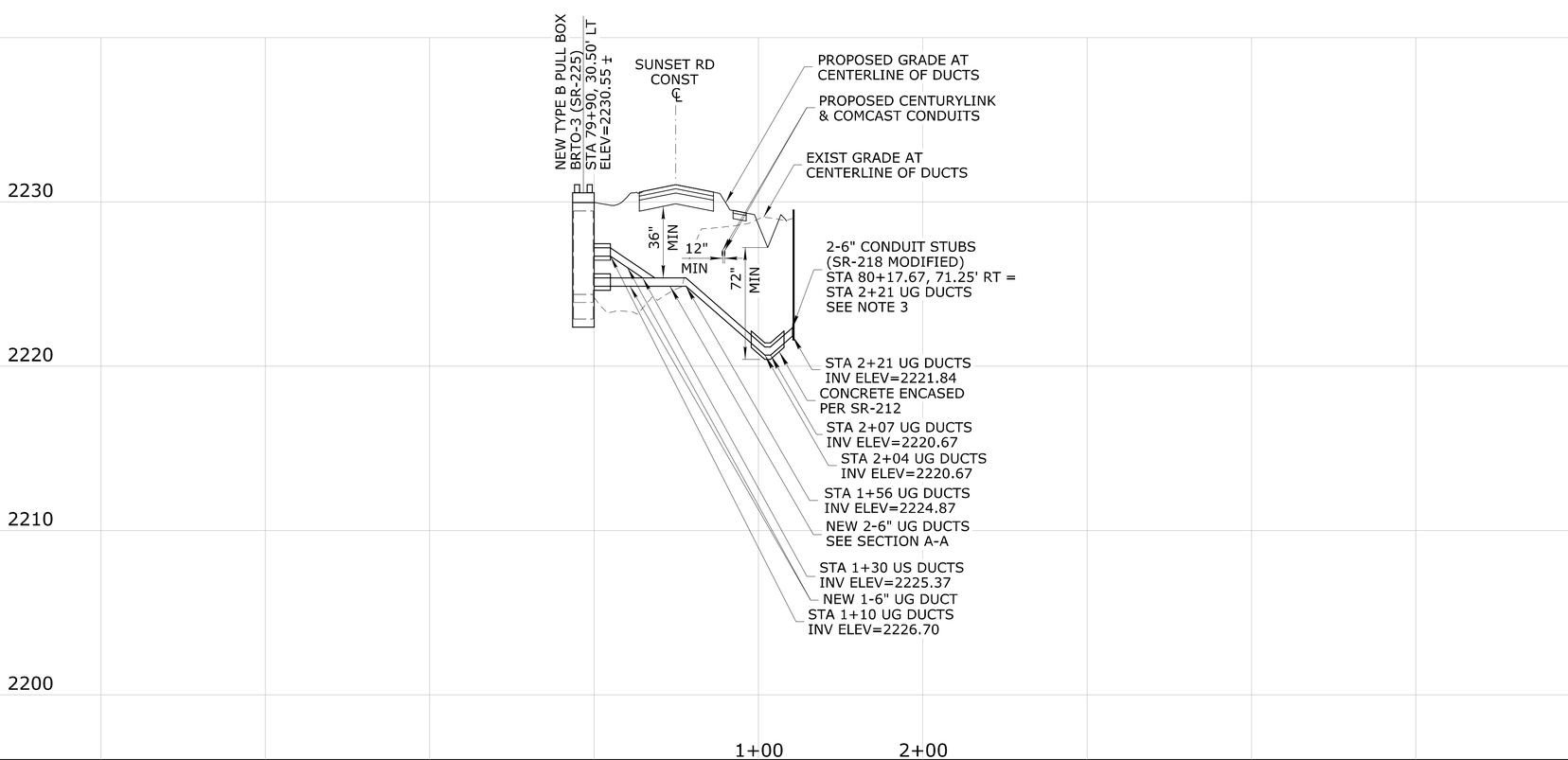

OP	OVERHEAD POWER
FO	FIBER OPTIC
W 42" CCP	42" CCP WATER
RW 24" DI	24" DI RECLAIMED WATER
W 12" DI	12" DI WATER
OT	OVERHEAD TELEPHONE
OP/OT	OVERHEAD POWER / OVERHEAD TELEPHONE
12" PVC W	12" PVC WATER
8" PVC W	8" PVC WATER
	ITS
	RIGHT OF WAY
	ACCESS CONTROL
	FENCE
	TEP CONDUIT
	EASEMENT

NEW ELECTRIC TANGENT DATA		
NO.	BEARING	LENGTH
L1	N 69°24'42" E	10.00'
L2	S 20°35'18" E	91.24'

NEW ELECTRIC CURVE DATA			
NO.	DELTA	ARC	RADIUS
C1	90°00'00"	19.63'	12.50'

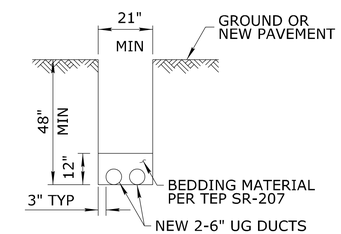

SECTION A-A

NOTES:
1. ALL STATIONS AND OFFSETS ARE REFERENCED FROM SUNSET RD CONST ℄ UNLESS OTHERWISE NOTED.
2. ONE FOOT MINIMUM SEPARATION IS REQUIRED BETWEEN NEW ELECTRIC CONDUITS AND NEW AND EXISTING UTILITIES UNLESS OTHERWISE NOTED.
3. SR-218 IS MODIFIED TO EXTEND THE VERTICAL CONDUIT TO 6 INCHES ABOVE THE GROUND LEVEL AND CAPPED. TRACER WIRE SHALL BE INSTALLED ALONG THE OUTSIDE OF THE VERTICAL CONDUIT THE LENGTH OF THE CONDUIT AND ON THE SIDE WHERE THE UNDERGROUND CONDUIT IS STUBBED.

Call at least two full working days before you being excavation.
ARIZONA 811
Arizona Blue Stake, Inc.
Dial 8-1-1 or 1-800- STAKE-IT (782-5348)
In Maricopa County: (602)263-1100

BEING REVISED / UNDER CONSTRUCTION
R.E. S. GARCIA/AECOM JOB #
TECH./DFTR. REV. # 00
CHECK WITH R.E. BEFORE PRINTING OR REVISING

SCALES HORIZ. 1"=40' VERT. 1"=4'

SHEET 203 OF 203

REVISIONS

DATE	ENG	TECH	REV

DESCRIPTION:

ISSUED FOR CONSTRUCTION
DATE: 11/2015
R.E.: S. GARCIA
PREP.: R. MURRIETA
APPR.:
WR: XXXXXX
BY: AECOM

SCALE FACTOR:
CONTRACTED ENG: AECOM DATE 11/2015
ENGINEERING TECH: R. MURRIETA DATE 11/2015
PROJECT ENGINEER: C. ROBINSON DATE 11/2015
ENGINEER APPROVAL: DATE

Registered Professional Engineer (Civil) CERTIFICATE NO. 33452 CHADLEE J. ROBINSON DATE SIGNED 3-31-2017 EXPIRES 3-31-2017

AUTOCADD

Tucson Electric Power Company
TUCSON, ARIZONA

TITLE: DISTRIBUTION UNDERGROUND
PLAN AND PROFILE
SUNSET RD: SILVERBELL RD TO I-10 EBFR

TRSQ T13S,R13E
S 8, 17, 18
REV 00 CODE XXXX
SHEET TEP7

Filename: P:\60311412 Sunset Rd\900-Work\910-CAD\20-SHEETS\4RTSUN_TEP06_seg1.dgn Time Plotted: 1:53:38 PM Date Plotted: 11/13/2015 PLOTTED BY: MurrietaR

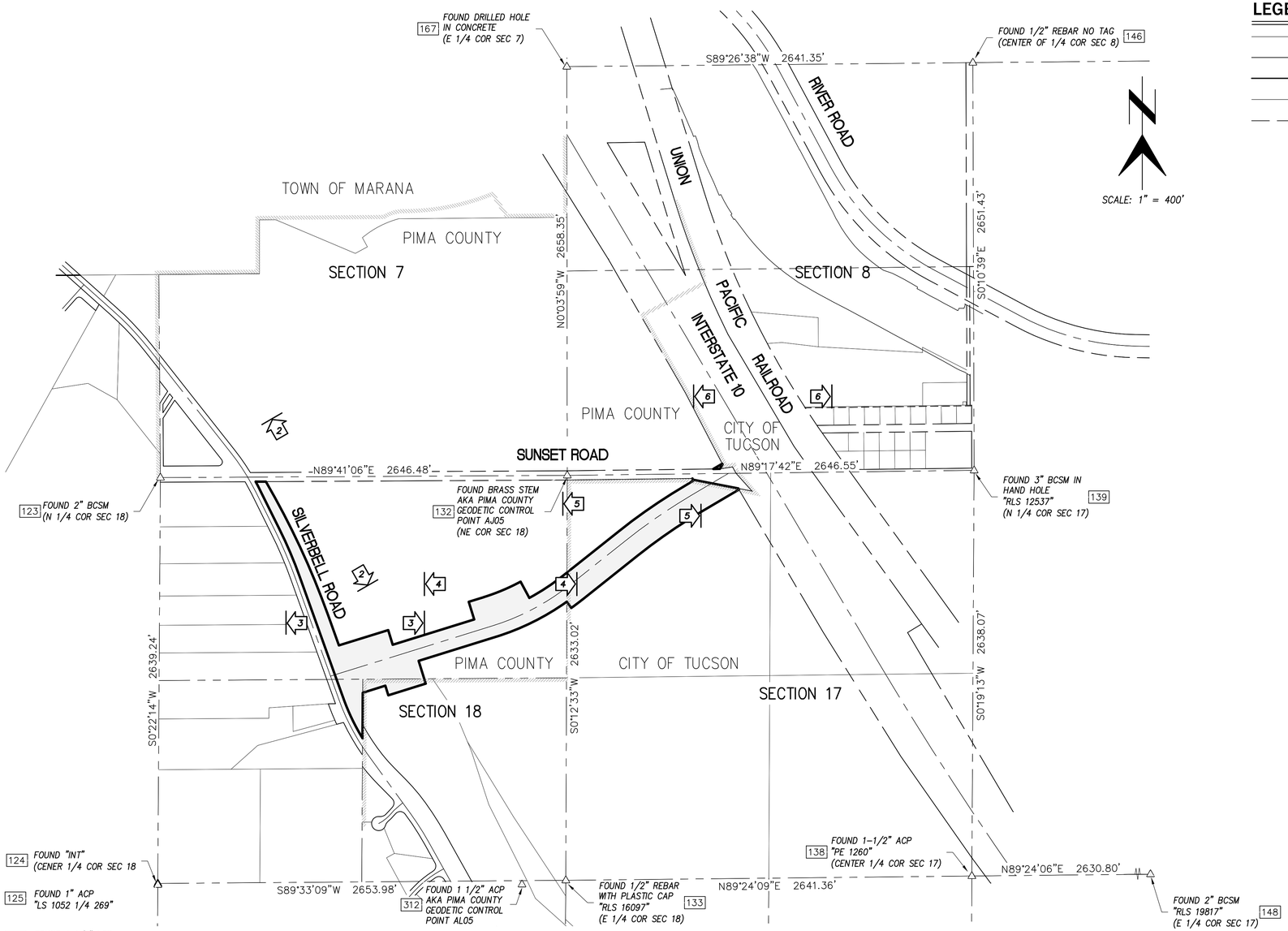

LEGEND

	SECTION LINE
	EXISTING RIGHT OF WAY LINE
	NEW RIGHT OF WAY LINE
	CENTERLINE ROAD
	EXISTING EASEMENT AS NOTED
	FOUND MONUMENT AS DESCRIBED
F.O.	FIBER OPTIC MARKER
	EXISTING UTILITY POLE
	EXISTING GUY POLE/ GUY WIRE
	EXISTING MANHOLE
E	EXISTING MANHOLE (ELECTRIC)
PB	EXISTING PULL BOX
E	EXISTING ELECTRIC
W	EXISTING MANHOLE (WATER)
WM	EXISTING WATER METER
A	EXISTING AIR RELEASE VALVE
	EXISTING CORROSION TEST STATION
	EXISTING WATER VALVE
	EXISTING SIGN
	EXISTING TREE/VEGETATION
	SET 3" BCSM
	SET 1/2"x18" REBAR WITH TAG
LCP	LEAD CAP PIPE
BCSM	BRASS CAP SURVEY MONUMENT
	CITY/TOWN/COUNTY LIMITS
1	PARCEL NUMBER
	RIGHT-OF-WAY TAKE

HORIZONTAL CONTROL

THE HORIZONTAL CONTROL FOR THIS PROJECT IS BASED ON EXISTING SURVEY CONTROL POINTS AS PROVIDED BY PIMA COUNTY/CITY OF TUCSON GEODETIC CONTROL POINTS. THE PUBLISHED COMBINED FACTOR FOR "AJ05" = 0.9998762050 WAS USED TO CONVERT GRID COORDINATES TO SURFACE.

TO CONVERT PROJECT COORDINATES TO STATE PLANE COORDINATES, ADD 400,000 TO THE NORTHINGS AND ADD 900,000 TO THE EASTINGS, THEN MULTIPLY BY 0.9998762050.

VERTICAL CONTROL

VERTICAL CONTROL FOR THIS PROJECT IS BASED ON PIMA COUNTY BENCHMARK DESIGNATION Q291 AKA NGS Q291 CS0554. BASED ON NAVD 88 DATUM HAVING AN ELEVATION OF 2,232.24 FEET. STATION MARK IS A BENCHMARK DISK SET IN CONCRETE. STAMPED Q291 1951.

BASIS OF BEARINGS

THE BASIS OF BEARINGS FOR THIS PROJECT IS A GRID BEARING OF N 55°56'26" E BETWEEN PIMA COUNTY DOT/CITY OF TUCSON DOT GEODETIC, CONTROL POINT AL03 AND PIMA COUNTY DOT/CITY OF TUCSON DOT GEODETIC, CONTROL POINT AG09, AS ESTABLISHED FROM THE ARIZONA COORDINATE SYSTEM, 1983 (HARN 92), CENTRAL ZONE 0202.

COORDINATE TABLE

PT NO	NORTHING	EASTING
123	77173.1870	66458.3730
124	74534.0030	66441.3080
125	74534.0560	66441.2020
126	74528.8720	66441.4000
127	74525.1590	66441.4970
132	77187.7400	69104.8170
133	74554.7340	69095.2040
138	74582.2820	71736.4210
139	77220.3030	71751.0990
146	79871.7560	71742.9100
148	74609.7510	74367.0840
167	79846.0840	69101.7340
312	74527.8920	68810.1700

SCALES		
Horiz.	1"=400'	Sheet RW01 of RW06
Vert.	N/A	

		Date
Designed	BB	11/15
Drawn	BDB	11/15
Checked	BB	11/15

No.	Revision Description	Engineer	Date

Priscilla S. Cornelio, P.E., Director

REGISTERED LAND SURVEYOR CERTIFICATE NO. 60468 BRUCE BROWN Date signed 11/18/15 ARIZONA U.S.A. Expires 09/30/16

Engineering and Environmental Consultants, Inc.
4625 E. FT. LOWELL RD. TUCSON, ARIZONA 85712 520-321-4625

Pima County Department of Transportation

RIGHT OF WAY PLANS
SUNSET ROAD
SILVERBELL ROAD TO INTERSTATE-10
PROJECT NO.

SEQ

SCALE: 1" = 40'

SECTION 7

SECTION 18

FOUND BRASS STEM
AKA PIMA COUNTY
GEODETIC CONTROL 132
POINT AJ05
(NE COR SEC 18)

EXIST R/W

SUNSET ROAD

2078.50'
SECTION LINE

N89°41'06"E 2646.48'

PIMA COUNTY
FLOOD CONTOL DISTRICT
101-06-009F

200.0'
TUCSON GAS AND ELECTRIC COMPANY EASEMENT
BK 2288, PG 548

PIMA COUNTY
FLOOD CONTOL DISTRICT
101-21-0010

WAPA POWER POLE

30.0'

N89°41'06"E
66.69'

100.0'
USA EASEMENT FOR
ELECTRIC TRANSMISSION LINE
BK 211, PG 250

NEW R/W

L=955.91' R=5240.00'
Δ=10°27'08" (TOTAL)

L=59.92' R=1477.64'
Δ=2°19'25"

1

FOUND
1/2" REBAR
"RLS 26932"

ROAD

L=336.33' R=2884.21'
Δ=6°40'52" (TOTAL)

SEE SHEET 3

101-21-0020

101-21-003A

567.97'

FOUND 2" BCSM
N 1/4 COR SEC 18 123

SCALES	Horiz. 1"=40'	Sheet RW02 of RW06
	Vert. N/A	

Pima County Department of Transportation

Priscilla S. Cornelio, P.E., Director

		Date
Designed	BB	11/15
Drawn	BDB	11/15
Checked	BB	11/15

No.	Revision Description	Engineer	Date

REGISTERED LAND SURVEYOR
CERTIFICATE NO.
60468
BRUCE
BROWN
Date signed 11/16/15
ARIZONA U.S.A.
Expires 09/30/16

eec
Engineering and Environmental Consultants, Inc.
4625 E. FT. LOWELL RD.
TUCSON, ARIZONA 85712
520-321-4625

RIGHT OF WAY PLANS
SUNSET ROAD
SILVERBELL ROAD TO INTERSTATE-10
PROJECT NO.

SEQ

SEQ

0:\13039 Sunset Rd\Survey\ROW\13039row-02.dwg Plotted: Dec 10, 2015 - 10:30am bbrown

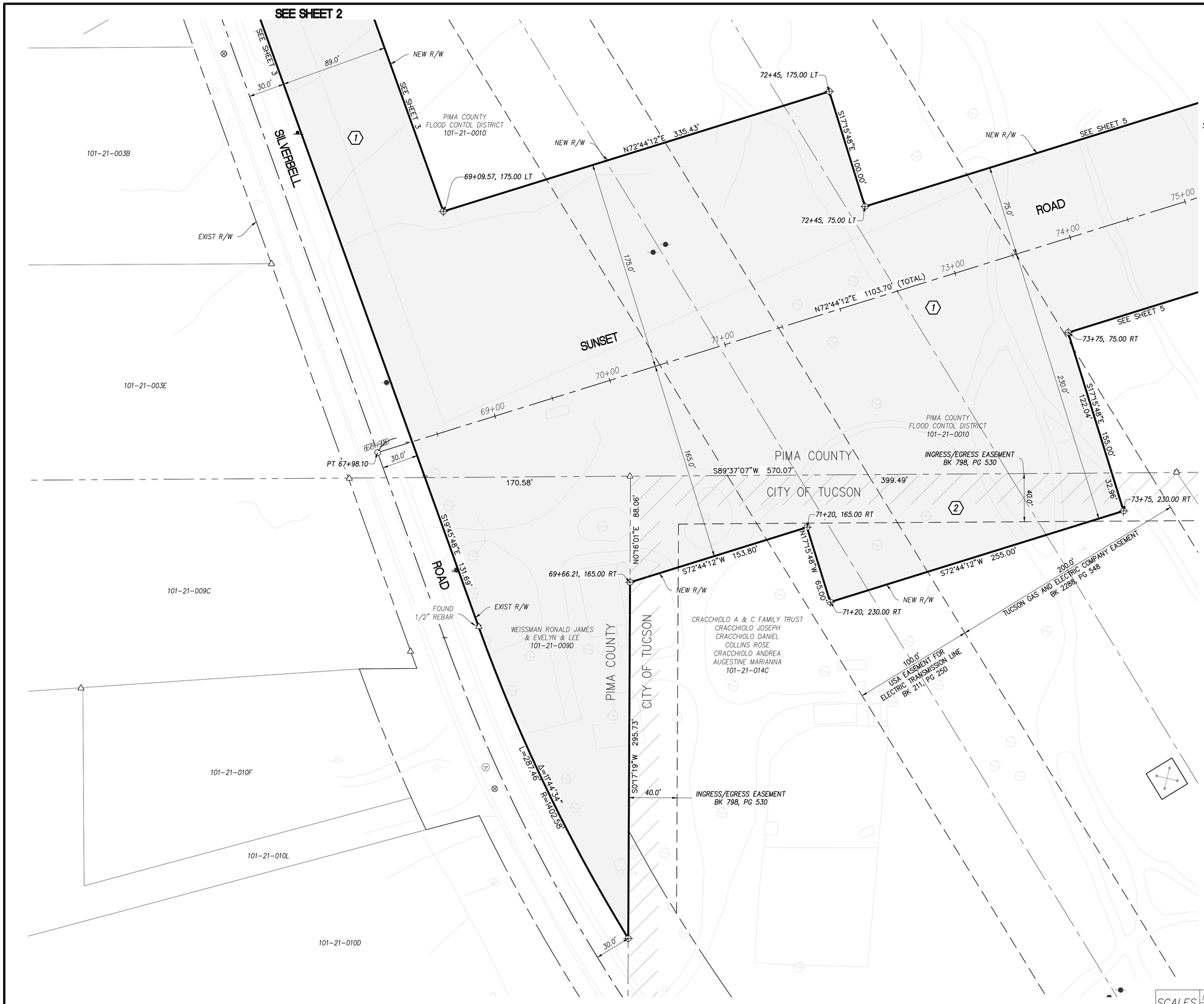

SCALES	Horiz.	1"=40'
	Vert.	N/A

Sheet RW03 of RW06

No.	Revision Description	Engineer	Date

		Date
Designed	BB	11/15
Drawn	BDB	11/15
Checked	BB	11/15

Priscilla S. Cornelio, P.E., Director

REGISTERED LAND SURVEYOR
CERTIFICATE NO.
60468
BRUCE
BROWN
Date signed 11/18/15
ARIZONA U.S.A.
Expires 09/30/16

Pima County Department of Transportation

RIGHT OF WAY PLANS
SUNSET ROAD
SILVERBELL ROAD TO INTERSTATE-10
PROJECT NO.

Engineering and Environmental Consultants, Inc.
4625 E. FT. LOWELL RD.
TUCSON, ARIZONA 85712
520-321-4625

SEQ

SEQ

0:\13039 Sunset Rd\Survey\ROW\13039row-03.dwg Plotted: Dec 10, 2015 - 10:31am bbrown

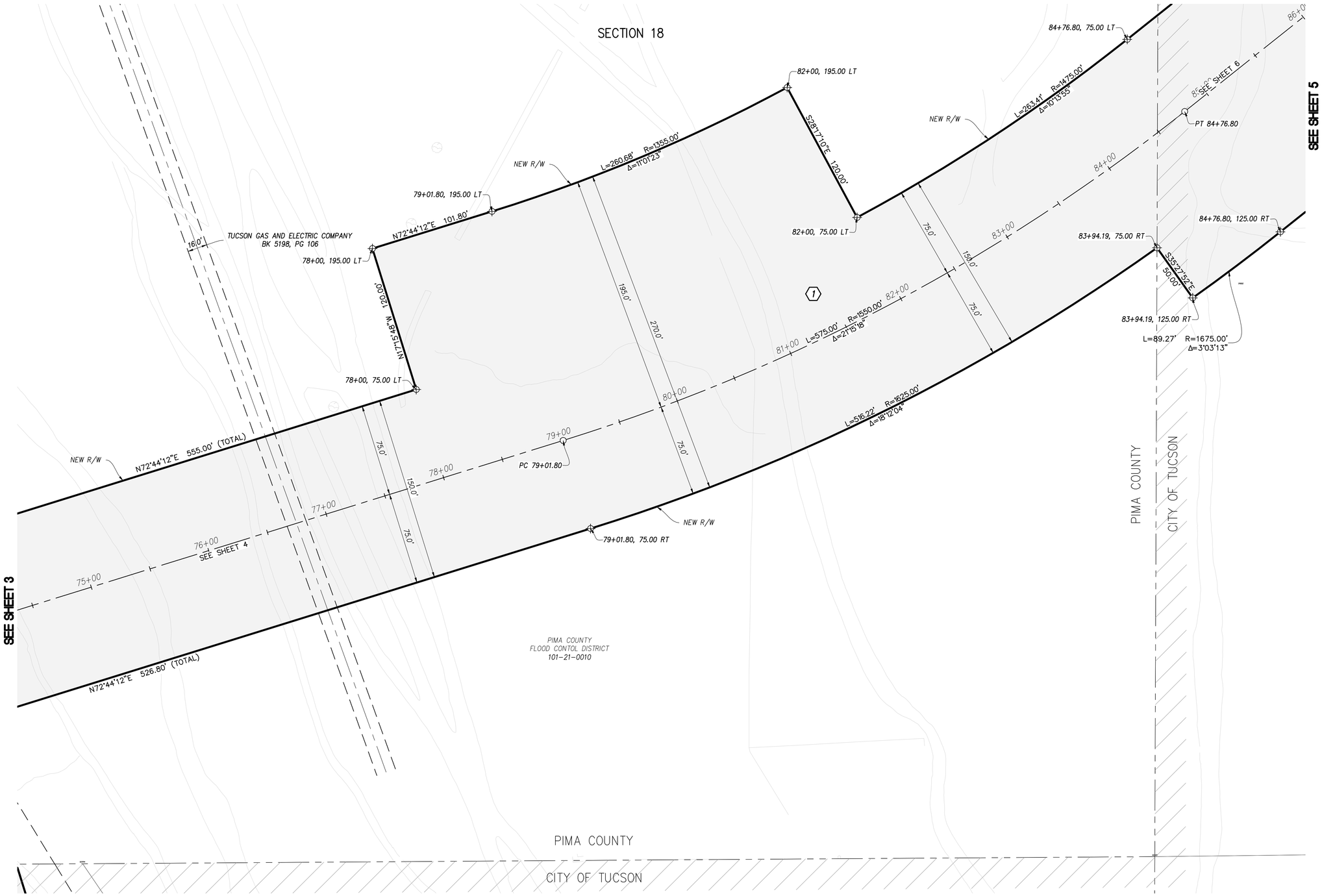

SCALES	Horiz.	1"=40'
	Vert.	N/A

Sheet RW04 of RW06

No.	Revision Description	Engineer	Date

		Date
Designed	BB	11/15
Drawn	BDB	11/15
Checked	BB	11/15

Priscilla S. Cornelio, P.E., Director

REGISTERED LAND SURVEYOR
CERTIFICATE NO.
60468
BRUCE
BROWN
Date signed 11/16/15
ARIZONA U.S.A.
Expires 09/30/16

Pima County Department of Transportation

RIGHT OF WAY PLANS
SUNSET ROAD
SILVERBELL ROAD TO INTERSTATE-10
PROJECT NO.

eec
Engineering and Environmental Consultants, Inc.
4625 E. FT. LOWELL RD.
TUCSON, ARIZONA 85712
520-321-4625

SEQ

0:\13039 Sunset Rd\Survey\ROW\13039row-04.dwg Plotted: Dec 10, 2015 - 10:40am bbrown

SEQ

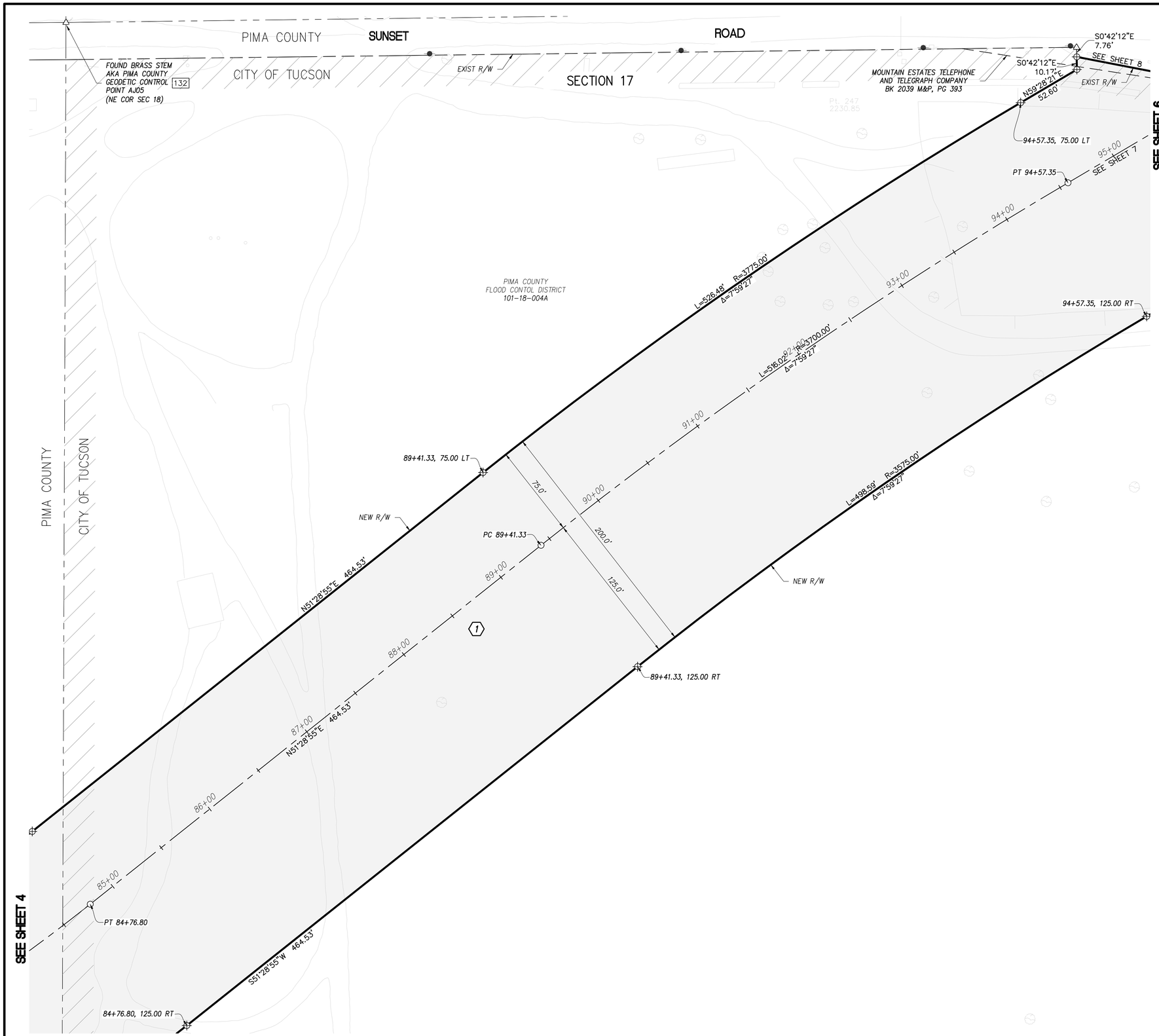

SCALES	Horiz.	1"=40'	Sheet RW05 of RW06
	Vert.	N/A	

Pima County Department of Transportation

Priscilla S. Cornelio, P.E., Director

No.	Revision Description	Engineer	Date

		Date
Designed	BB	11/15
Drawn	BDB	11/15
Checked	BB	11/15

REGISTERED LAND SURVEYOR
CERTIFICATE NO.
60468
BRUCE
BROWN
Date signed 11/16/15
ARIZONA U.S.A.
Expires 09/30/16

Engineering and Environmental Consultants, Inc.
4625 E. FT. LOWELL RD.
TUCSON, ARIZONA 85712 520-321-4625

RIGHT OF WAY PLANS
SUNSET ROAD
SILVERBELL ROAD TO INTERSTATE-10
PROJECT NO.

SEQ

SEQ

G:\13039 Sunset Rd\Survey\ROW\13039row-05.dwg Plotted: Dec 10, 2015 - 10:42am bbrown

PARCEL	PIMA CO TAX ID	OWNER	ACQUISITION TYPE	GROSS AREA (SF)	ACQUISITION AREA (SF)	NET AREA (SF)
1	101-21-0010 101-18-004A 101-07-106P	PIMA COUNTY REGIONAL FLOOD CONTROL DISTRICT	RIGHT OF WAY	4,206,795	683612.2	3523182.8
2	101-21-014C	CRACCHIOLO A & C FAMILY TR B	RIGHT OF WAY	851,276	27,614.2	823,661.8

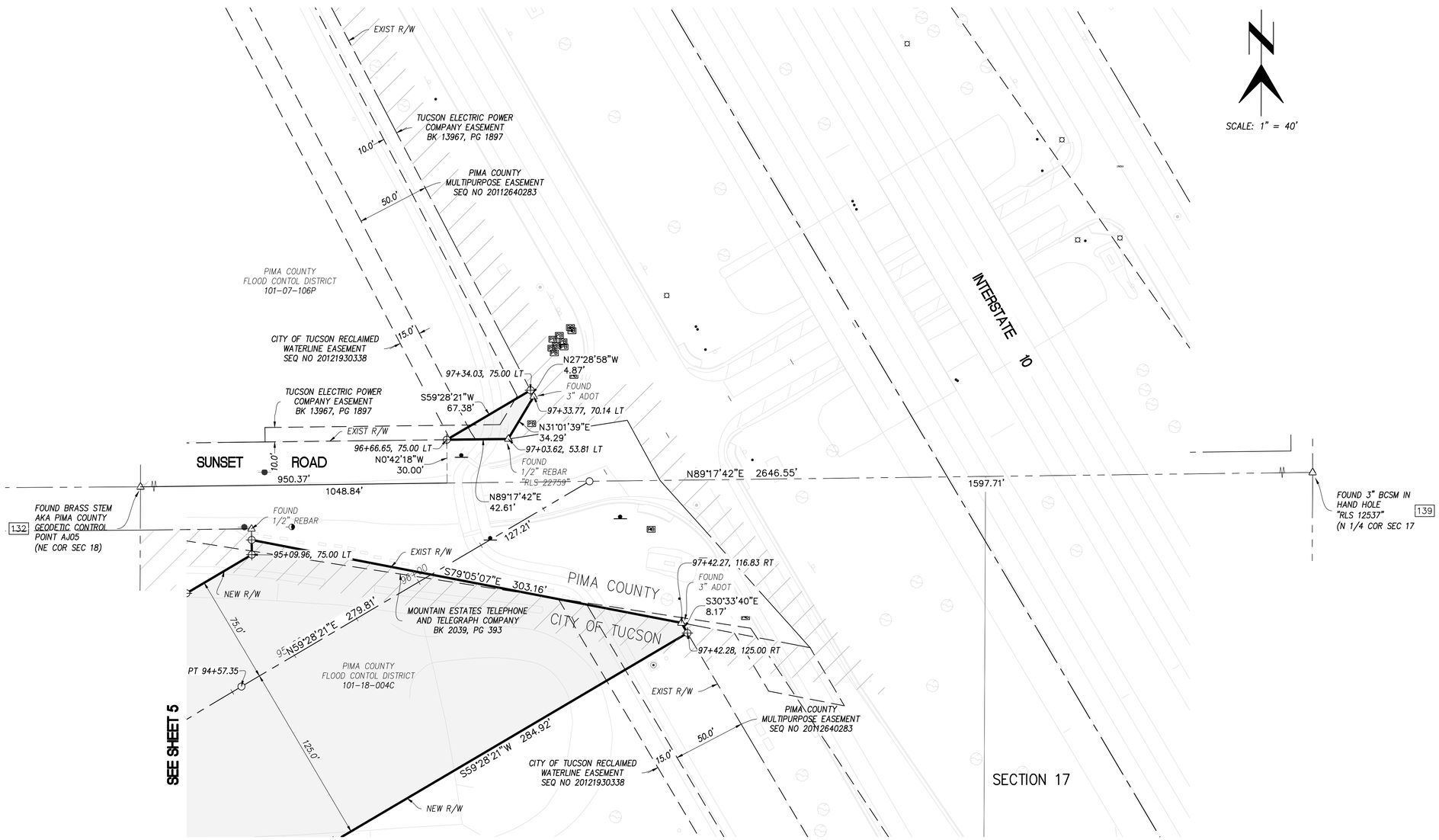

SCALES	Horiz. 1"=40'	Sheet RW06 of RW06
	Vert. N/A	

Pima County Department of Transportation

Priscilla S. Cornelio, P.E., Director

No.	Revision Description	Engineer	Date

		Date
Designed	BB	11/15
Drawn	BDB	11/15
Checked	BB	11/15

REGISTERED LAND SURVEYOR CERTIFICATE NO. 60468 BRUCE BROWN Date signed 11/18/15 ARIZONA U.S.A. Expires 09/30/16

eec Engineering and Environmental Consultants, Inc.
4625 E. FT. LOWELL RD.
TUCSON, ARIZONA 85712 520-321-4625

RIGHT OF WAY PLANS
SUNSET ROAD
SILVERBELL ROAD TO INTERSTATE-10
PROJECT NO.

SEQ

SEQ

O:\13039 Sunset Rd\Survey\ROW\13039row-06.dwg Plotted: Dec 10, 2015 - 10:44am bbrown

SUNSET ROAD
SILVERBELL ROAD TO INTERSTATE 10

PIMA COUNTY
TRANSPORTATION

PIMA COUNTY BOARD OF SUPERVISORS

SHARON BRONSON, CHAIRMAN, DISTRICT 3
ALLY MILLER, DISTRICT 1 RAY CARROLL, DISTRICT 4
RAMON VALADEZ, DISTRICT 2 RICHARD ELIAS, DISTRICT 5

PROJECT IN SUPERVISOR DISTRICT 1

PROJECT NUMBER
4RTSUN

ROADWAY CROSS SECTIONS

NOVEMBER 2015

SUNSET ROAD – SILVERBELL ROAD TO I-10 – PROJECT NO. 4RTSUN

Call at least two full working days before you being excavation.
ARIZONA 811
Arizona Blue Stake, Inc.
Dial 8-1-1 or 1-800- STAKE-IT (782-5348)
In Maricopa County: (602)263-1100

TRANSPORTATION

AECOM USA, Inc.
333 E. WETMORE RD, SUITE 400
Tucson, Arizona 85705
T 520.887.1800 F 520.837.8438

AECOM
www.aecom.com

No.	Revisions	Engineer	Date

No.	As Built	Engineer	Date

FOR INFORMATION ONLY

Pima County Department of Transportation
201 N. Stone Ave. 4th floor Tucson, Arizona 85701
Phone Number: 740-6410
Priscilla S. Cornelio, P.E. Director

Reviewed by	Engineer	Date
Mgr. Trans Engr.		
Mgr. Traffic Engr.		
Mgr. Field Engr.		
Mgr. WWM		

Approved: _____20__

Director

Project No. 4RTSUN

Sheet No. CS01 of CS01

Page No. 1 of 22

FILE NAME: P:\60311412 Sunset Rd\900-Work\910-CAD\20-SHEETS\4RTSUN_ xsecfs.dgn DATE: 11/13/2015 TIME: 10:59:37 AM MurrietaR

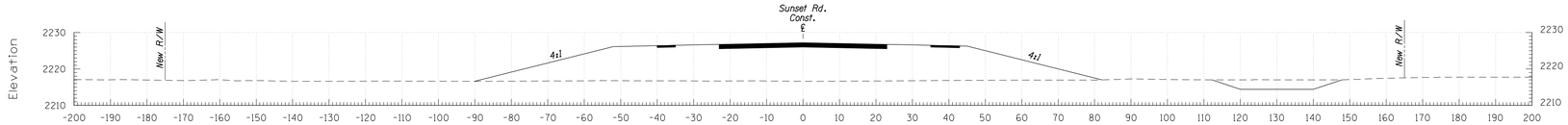

Area Fill : 1261 SF
Vol. Fill : 1826 CY

70+00

Area Over Ex. : 0 SF
Vol. Over Ex. : 0 CY

Area Ex. : 0 SF
Vol. Ex. : 0 CY

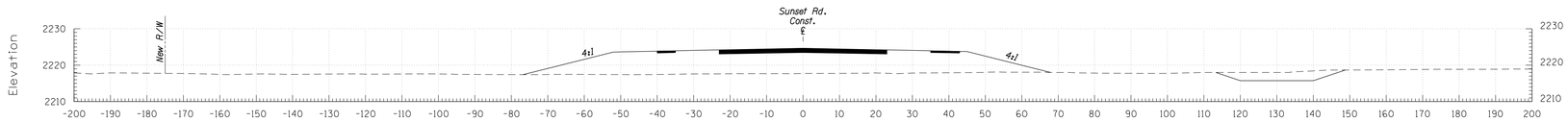

Area Fill : 711 SF
Vol. Fill : 1011 CY

69+50

Area Over Ex. : 0 SF
Vol. Over Ex. : 17 CY

Area Ex. : 0 SF
Vol. Ex. : 0 CY

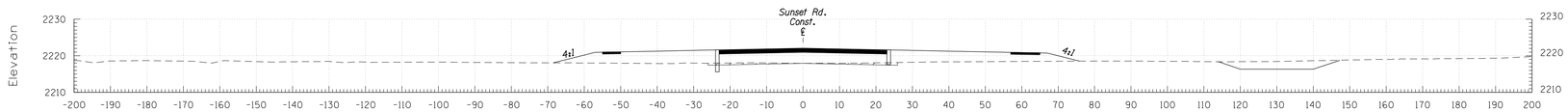

Area Fill : 381 SF
Vol. Fill : 355 CY

69+00

Area Over Ex. : 19 SF
Vol. Over Ex. : 256 CY

Area Ex. : 0 SF
Vol. Ex. : 42 CY

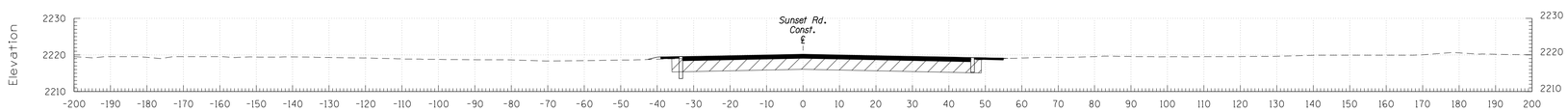

Area Fill : 2 SF
Vol. Fill : 1 CY

68+50

Area Over Ex. : 258 SF
Vol. Over Ex. : 240 CY

Area Ex. : 46 SF
Vol. Ex. : 70 CY

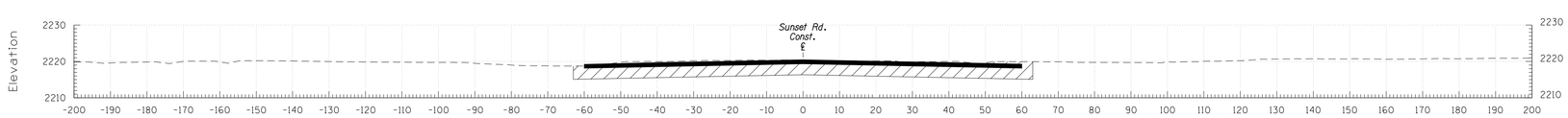

Area Fill : 0 SF
Vol. Fill : 0 CY

68+30

Area Over Ex. : 391 SF
Vol. Over Ex. : 0 CY

Area Ex. : 143 SF
Vol. Ex. : 0 CY

SUNSET ROAD – SILVERBELL ROAD TO I-10 – PROJECT NO. 4RTSUN

Scale: 1"=20'	AECOM	SUNSET ROAD	Sta. 68+30 to Sta. 70+00	Sheet 2 of 22

FILE NAME: P:\60311412 Sunset Rd\900-Work\910-CAD\20-SHEETS\4RTSUN_xsec_SS1.dgn DATE: 11/13/2015 TIME: 11:01:19 AM PRINTED BY: MurrietaR

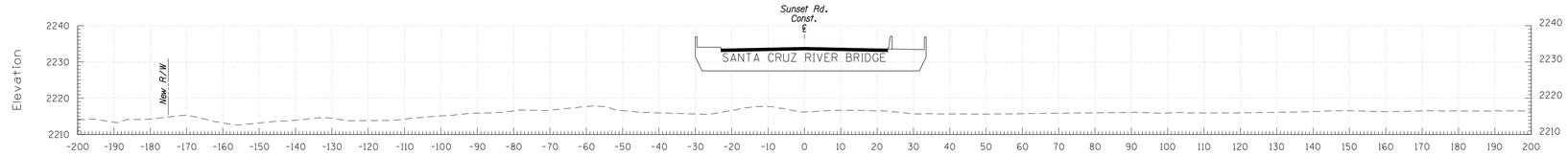

Area Fill : 0 SF
Vol. Fill : 0 CY

72+00

Area Over Ex. : 0 SF
Vol. Over Ex. : 0 CY

Area Ex. : 0 SF
Vol. Ex. : 0 CY

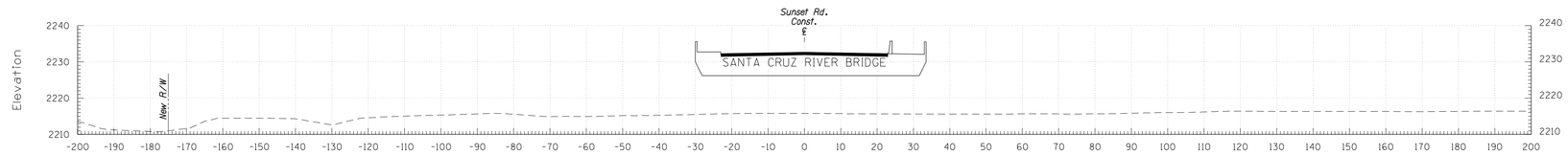

Area Fill : 0 SF
Vol. Fill : 0 CY

71+50

Area Over Ex. : 0 SF
Vol. Over Ex. : 0 CY

Area Ex. : 0 SF
Vol. Ex. : 0 CY

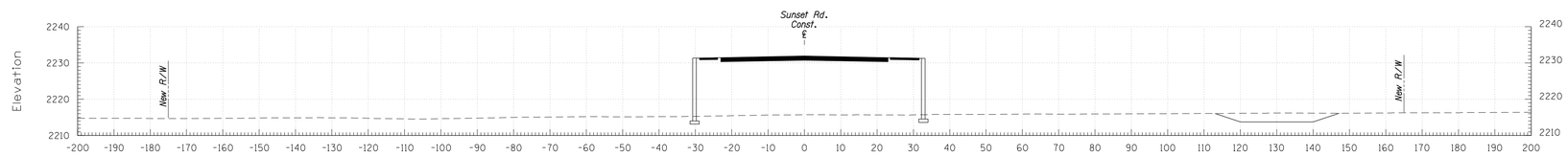

Area Fill : 932 SF
Vol. Fill : 1109 CY

71+23

Area Over Ex. : 0 SF
Vol. Over Ex. : 0 CY

Area Ex. : 0 SF
Vol. Ex. : 0 CY

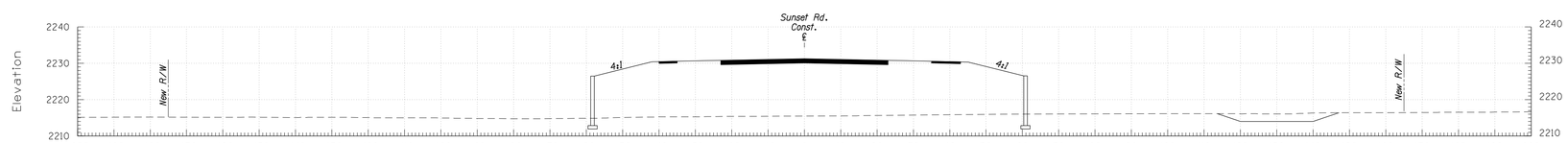

Area Fill : 1673 SF
Vol. Fill : 3079 CY

71+00

Area Over Ex. : 0 SF
Vol. Over Ex. : 0 CY

Area Ex. : 0 SF
Vol. Ex. : 0 CY

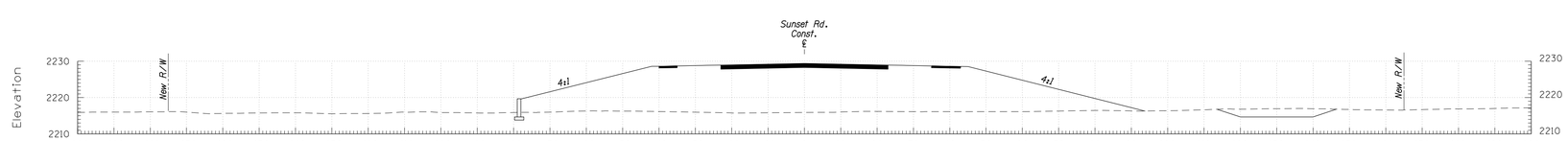

Area Fill : 1653 SF
Vol. Fill : 2698 CY

70+50

Area Over Ex. : 0 SF
Vol. Over Ex. : 0 CY

Area Ex. : 0 SF
Vol. Ex. : 0 CY

SUNSET ROAD – SILVERBELL ROAD TO I-10 – PROJECT NO. 4RTSUN

Scale: 1"=20'	AECOM	SUNSET ROAD	Sta. 70+50 to Sta. 72+00	Sheet 3 of 22

FILE NAME: P:\60311412 Sunset Rd\900-Work\910-CAD\20-SHEETS\4RTSUN_xsec_SS2.dgn DATE: 11/13/2015 TIME: 11:01:57 AM PRINTED BY: MurrietaR

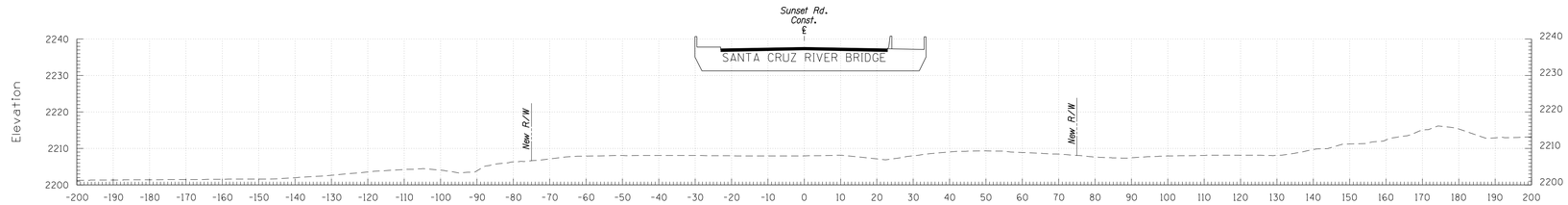

Area Fill : 0 SF
Vol. Fill : 0 CY

74+50

Area Over Ex. : 0 SF
Vol. Over Ex. : 0 CY

Area Ex. : 0 SF
Vol. Ex. : 0 CY

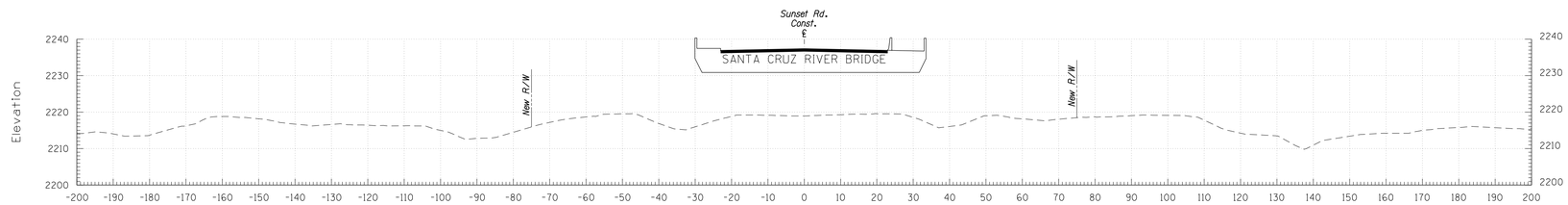

Area Fill : 0 SF
Vol. Fill : 0 CY

74+00

Area Over Ex. : 0 SF
Vol. Over Ex. : 0 CY

Area Ex. : 0 SF
Vol. Ex. : 0 CY

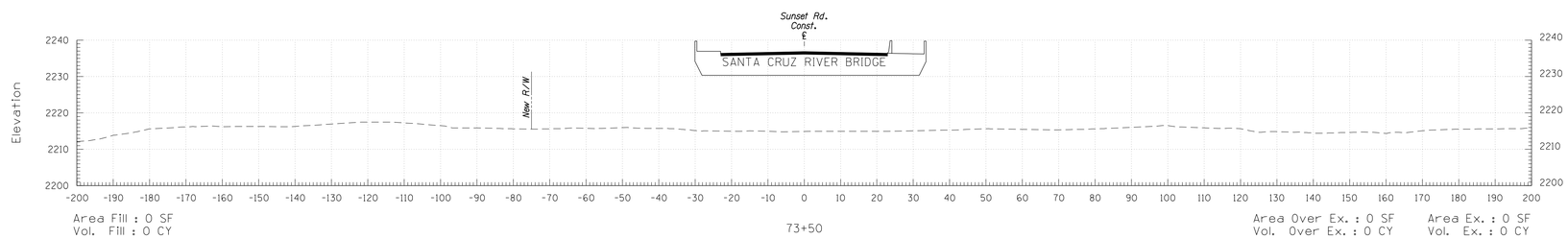

Area Fill : 0 SF
Vol. Fill : 0 CY

73+50

Area Over Ex. : 0 SF
Vol. Over Ex. : 0 CY

Area Ex. : 0 SF
Vol. Ex. : 0 CY

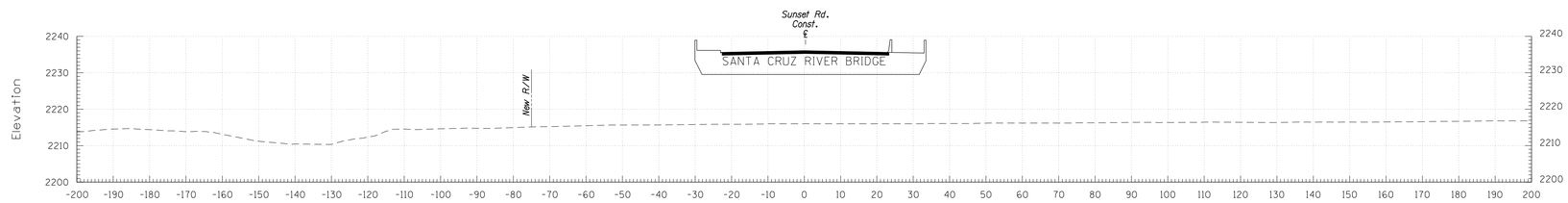

Area Fill : 0 SF
Vol. Fill : 0 CY

73+00

Area Over Ex. : 0 SF
Vol. Over Ex. : 0 CY

Area Ex. : 0 SF
Vol. Ex. : 0 CY

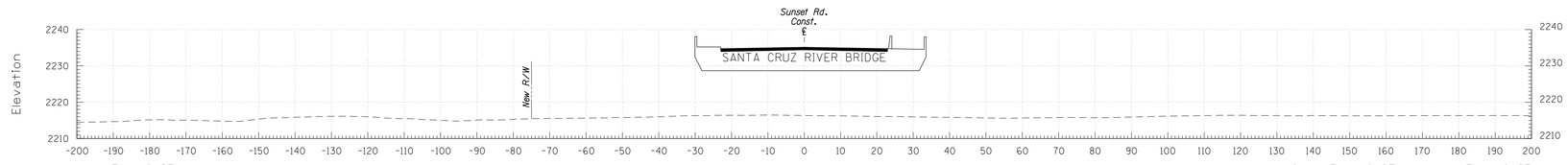

Area Fill : 0 SF
Vol. Fill : 0 CY

72+50

Area Over Ex. : 0 SF
Vol. Over Ex. : 0 CY

Area Ex. : 0 SF
Vol. Ex. : 0 CY

SUNSET ROAD – SILVERBELL ROAD TO I-10 – PROJECT NO. 4RTSUN

Scale: 1"=20'	AECOM	SUNSET ROAD	Sta. 72+50 to Sta. 74+50	Sheet 4 of 22

FILE NAME: P:\60311412 Sunset Rd\900-Work\910-CAD\20-SHEETS\4RTSUN_xsec_SS3.dgn DATE: 11/13/2015 TIME: 11:02:40 AM PRINTED BY: MurrietaR

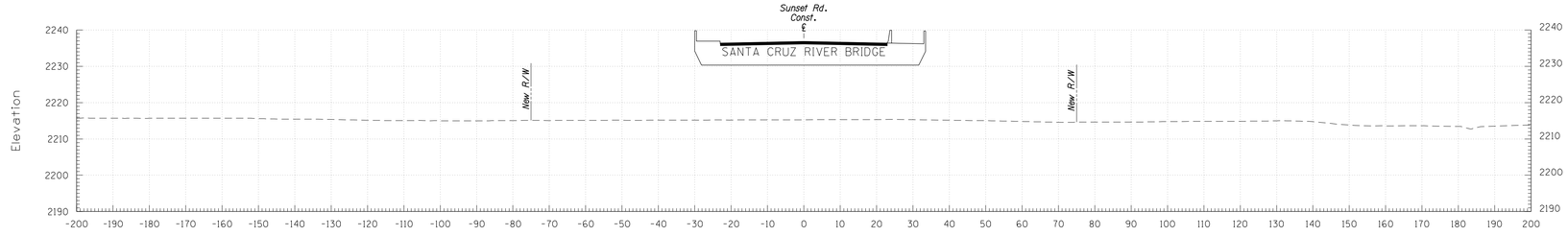

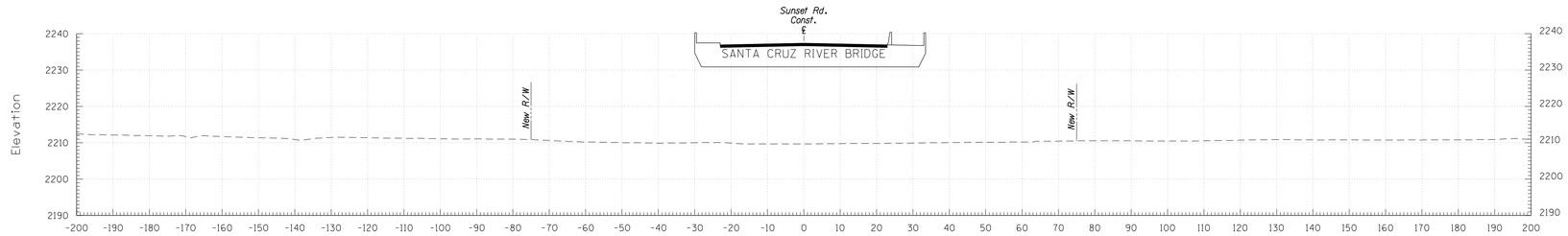

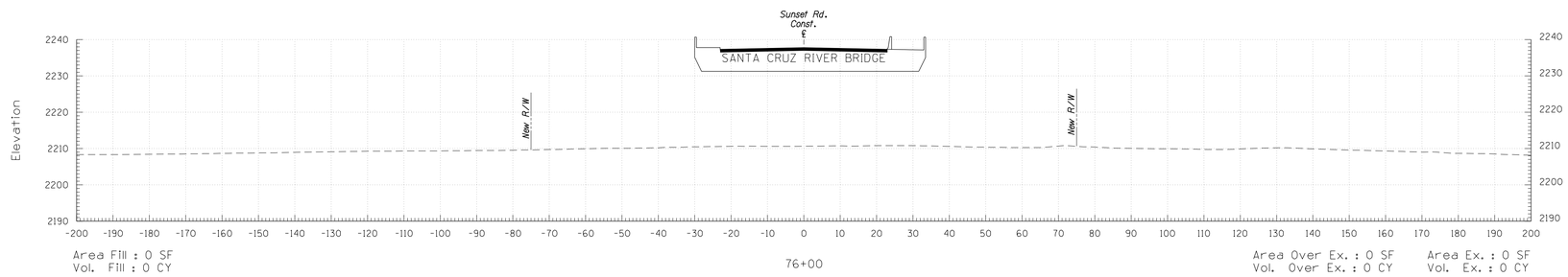

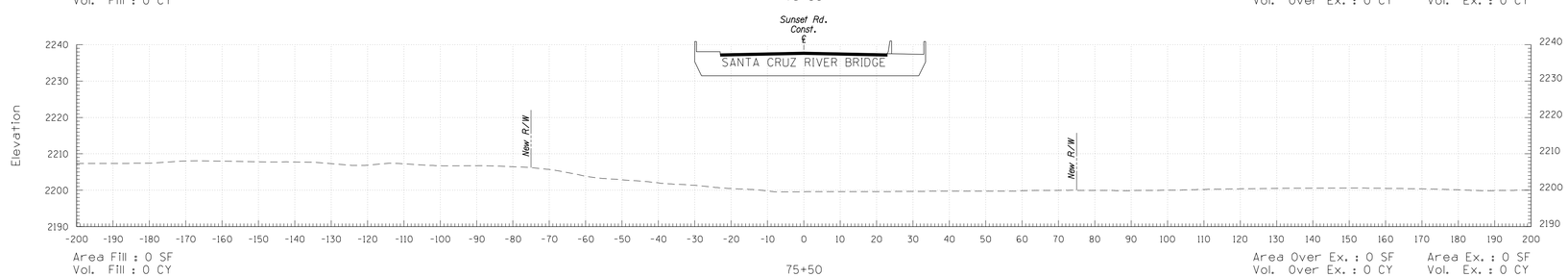

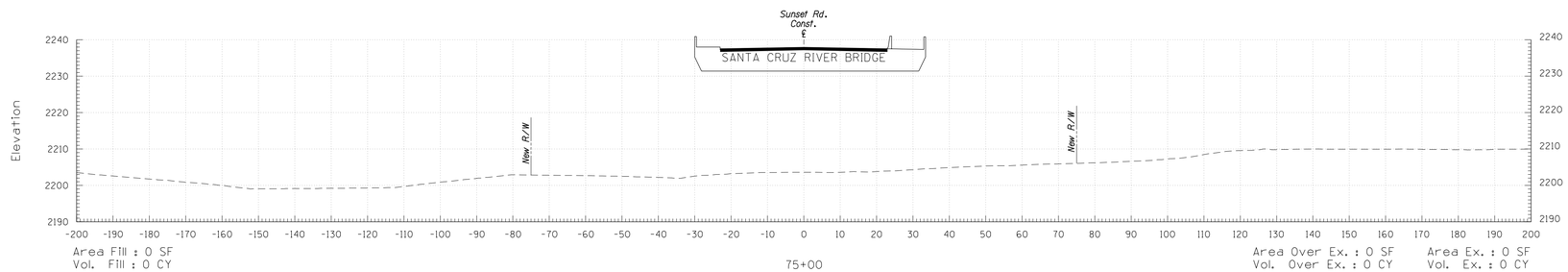

SUNSET ROAD – SILVERBELL ROAD TO I-10 – PROJECT NO. 4RTSUN

Scale: 1"=20'	AECOM	SUNSET ROAD	Sta. 75+00 to Sta. 77+00	Sheet 5 of 22

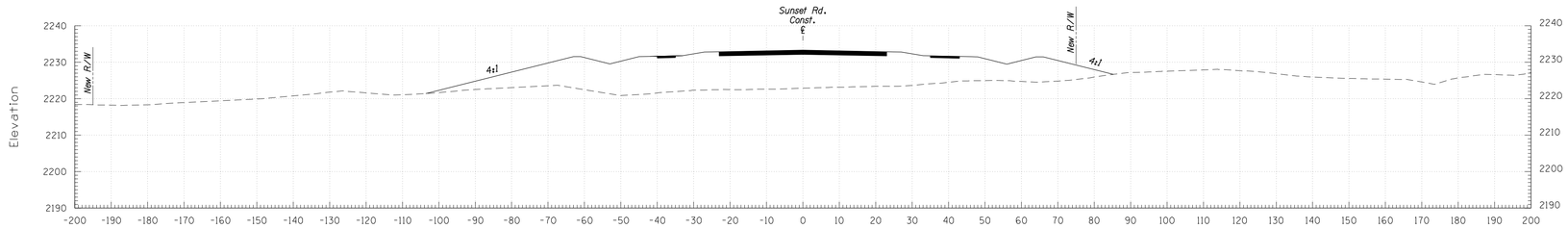

Area Fill : 1317 SF
Vol. Fill : 1795 CY

79+00

Area Over Ex. : 0 SF
Vol. Over Ex. : 0 CY

Area Ex. : 0 SF
Vol. Ex. : 0 CY

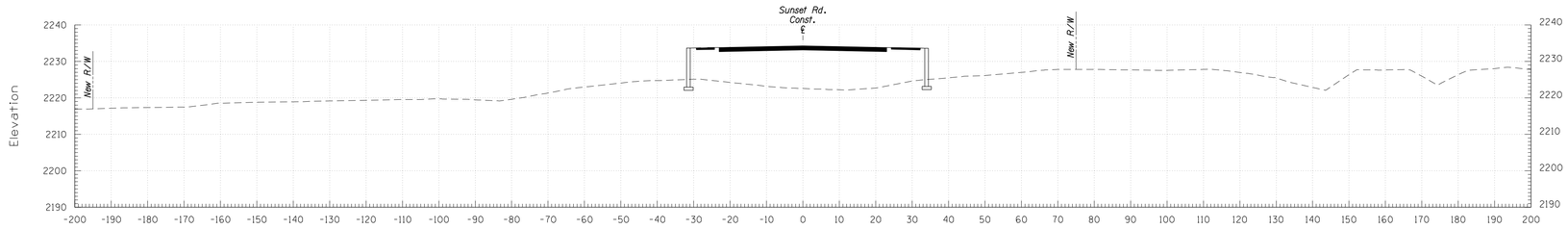

Area Fill : 622 SF
Vol. Fill : 46 CY

78+50

Area Over Ex. : 0 SF
Vol. Over Ex. : 0 CY

Area Ex. : 0 SF
Vol. Ex. : 0 CY

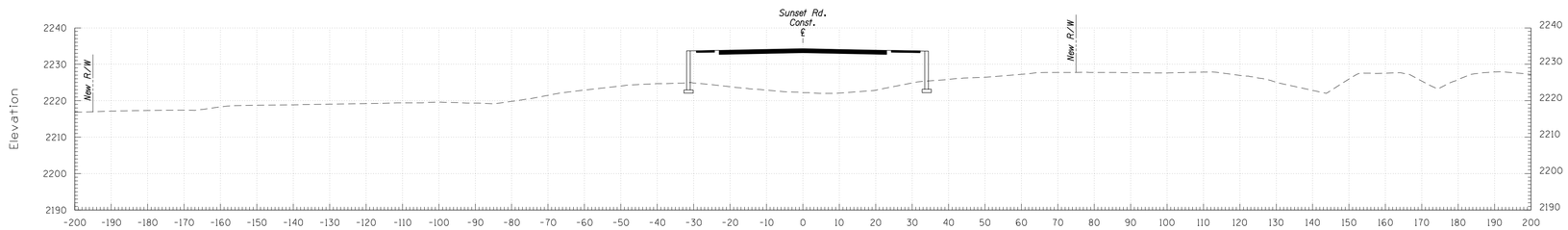

Area Fill : 631 SF
Vol. Fill : 0 CY

78+48

Area Over Ex. : 0 SF
Vol. Over Ex. : 0 CY

Area Ex. : 0 SF
Vol. Ex. : 0 CY

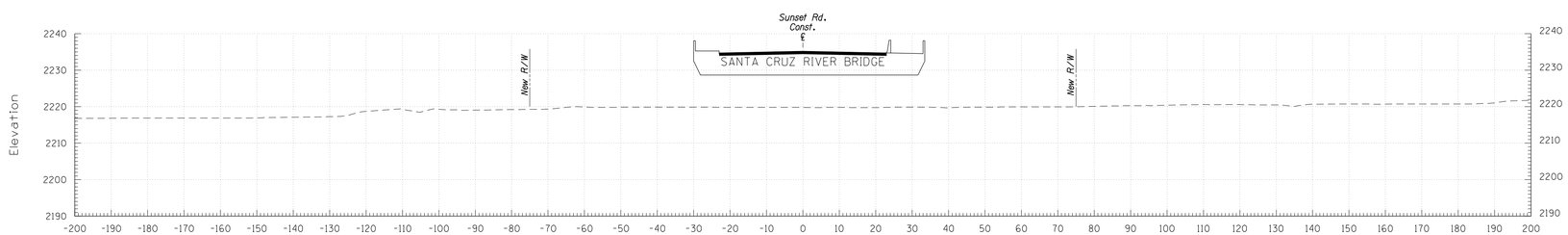

Area Fill : 0 SF
Vol. Fill : 0 CY

78+00

Area Over Ex. : 0 SF
Vol. Over Ex. : 0 CY

Area Ex. : 0 SF
Vol. Ex. : 0 CY

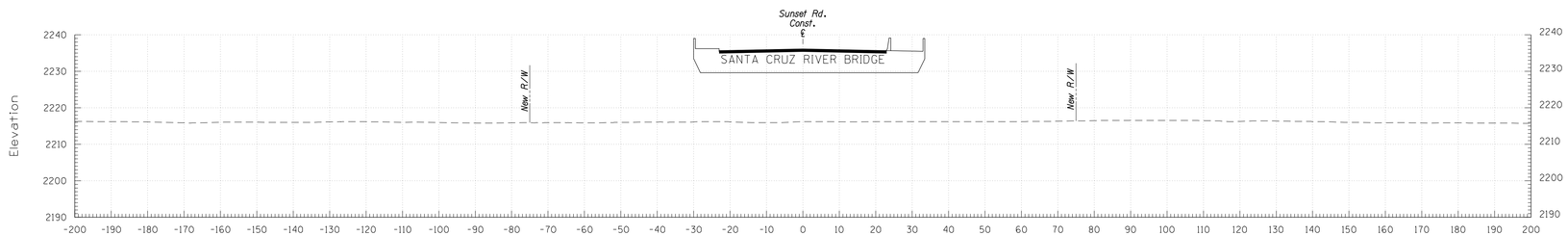

Area Fill : 0 SF
Vol. Fill : 0 CY

77+50

Area Over Ex. : 0 SF
Vol. Over Ex. : 0 CY

Area Ex. : 0 SF
Vol. Ex. : 0 CY

SUNSET ROAD – SILVERBELL ROAD TO I-10 – PROJECT NO. 4RTSUN

Scale: 1"=20'	AECOM	SUNSET ROAD	Sta. 77+50 to Sta. 79+00	Sheet 6 of 22

FILE NAME: P:\60311412 Sunset Rd\900-Work\910-CAD\20-SHEETS\4RTSUN_xsec_SS5.dgn DATE: 11/13/2015 TIME: 11:03:57 AM PRINTED BY: MurrietaR

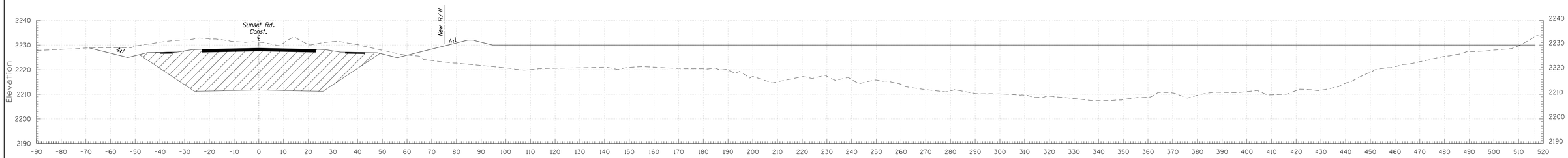

Area Fill : 6100 SF
Vol. Fill : 6322 CY

81+50

81+50

Area Over Ex. : 1208 SF Area Ex. : 446 SF
Vol. Over Ex. : 1266 CY Vol. Ex. : 502 CY

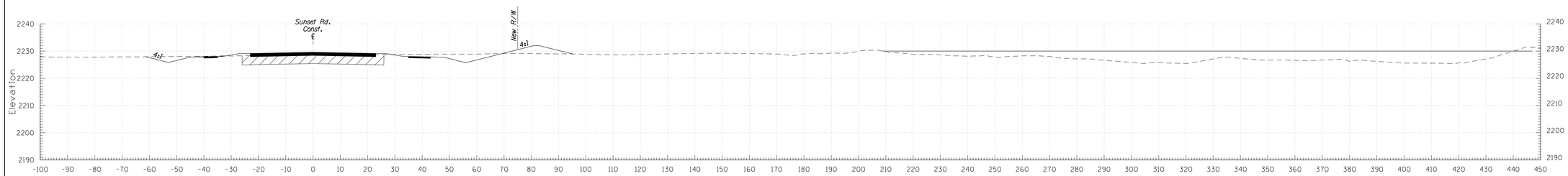

Area Fill : 727 SF
Vol. Fill : 886 CY

81+00

Area Over Ex. : 159 SF Area Ex. : 96 SF
Vol. Over Ex. : 181 CY Vol. Ex. : 97 CY

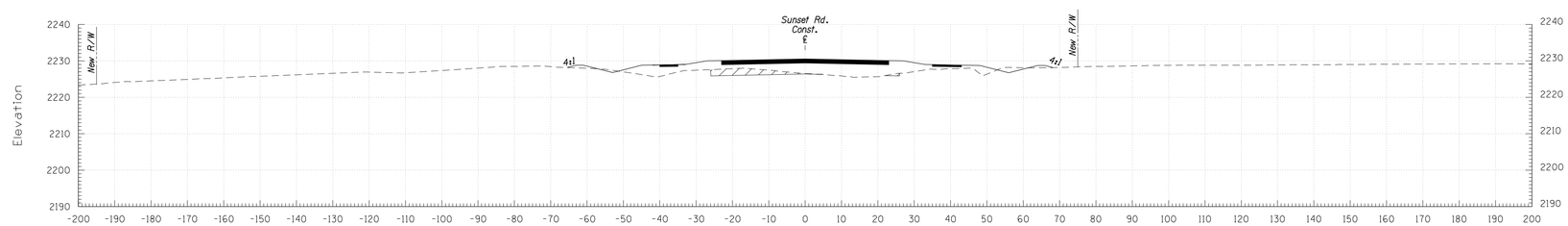

Area Fill : 230 SF
Vol. Fill : 584 CY

80+50

Area Over Ex. : 36 SF Area Ex. : 9 SF
Vol. Over Ex. : 75 CY Vol. Ex. : 11 CY

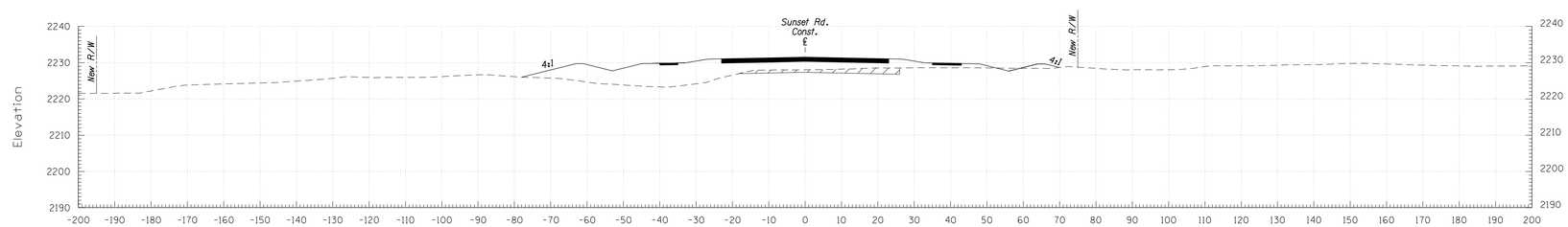

Area Fill : 400 SF
Vol. Fill : 1058 CY

80+00

Area Over Ex. : 45 SF Area Ex. : 3 SF
Vol. Over Ex. : 41 CY Vol. Ex. : 2 CY

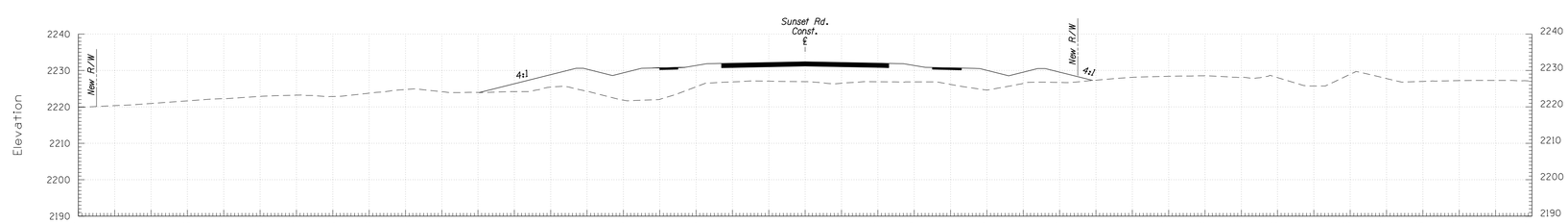

Area Fill : 743 SF
Vol. Fill : 1907 CY

79+50

Area Over Ex. : 0 SF Area Ex. : 0 SF
Vol. Over Ex. : 0 CY Vol. Ex. : 0 CY

SUNSET ROAD – SILVERBELL ROAD TO I-10 – PROJECT NO. 4RTSUN

Scale: 1"=20'	AECOM	SUNSET ROAD	Sta. 79+50 to Sta. 81+50	Sheet 7 of 22

FILE NAME: P:\60311412 Sunset Rd\900-Work\910-CAD\20-SHEETS\4RTSUN_xsec_SS6.dgn DATE: 11/13/2015 TIME: 11:04:21 AM PRINTED BY: MurrietaR

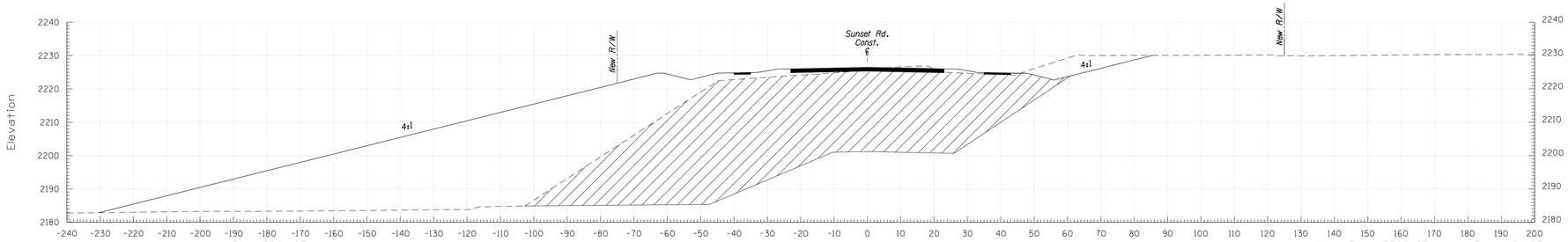

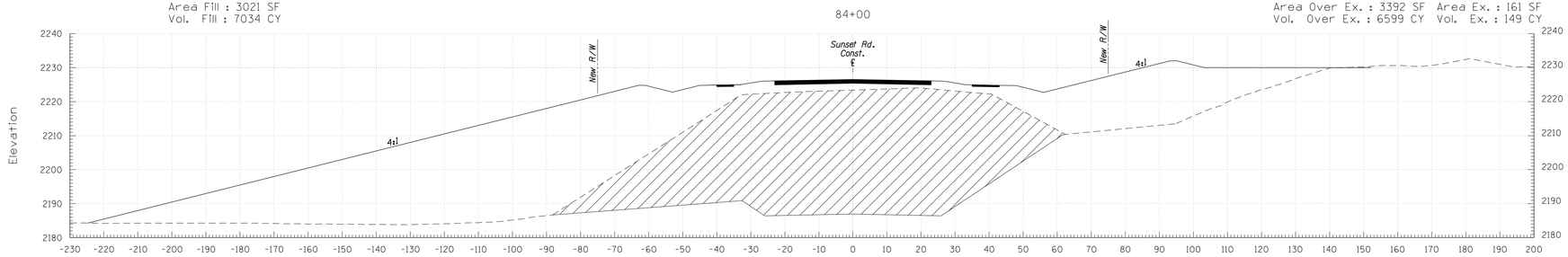

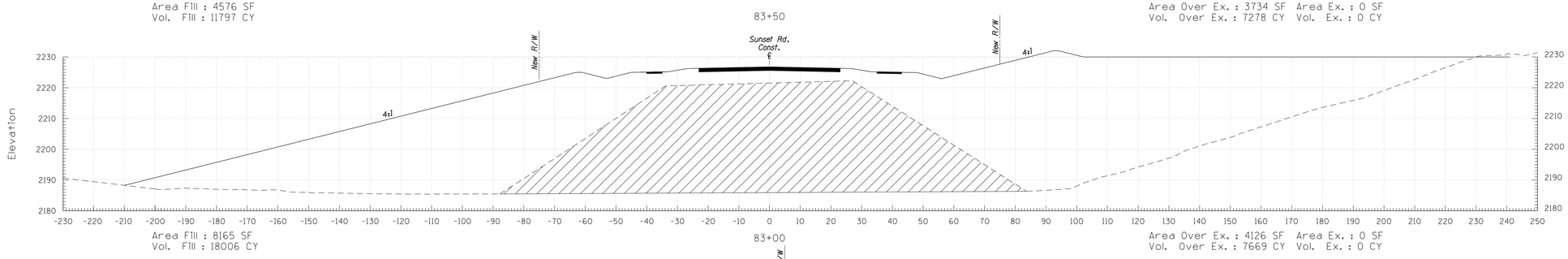

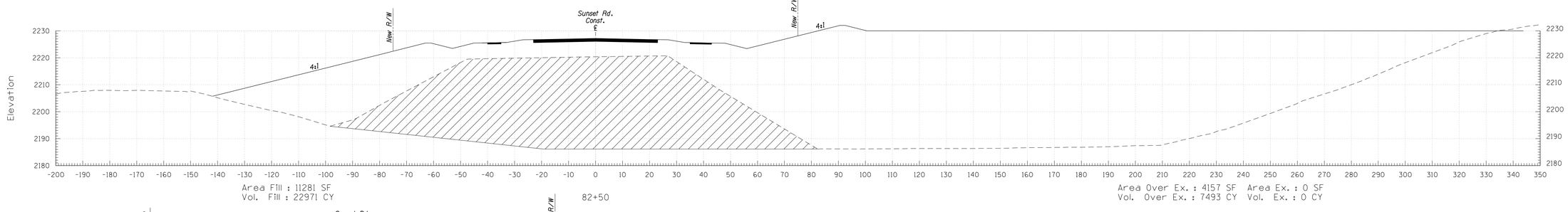

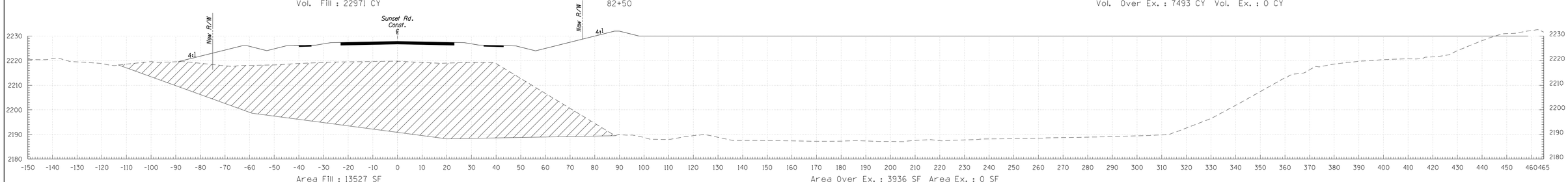

Scale: 1"=20'

AECOM | SUNSET ROAD | Sta. 82+00 to Sta. 84+00 | Sheet 8 of 22

SUNSET ROAD – SILVERBELL ROAD TO I-10 – PROJECT NO. 4RTSUN

FILE NAME: P:\60311412 Sunset Rd\900-Work\910-CAD\20-SHEETS\4RTSUN_xsec_SS7.dgn DATE: 11/13/2015 TIME: 11:05:04 AM PRINTED BY: MurrietaR

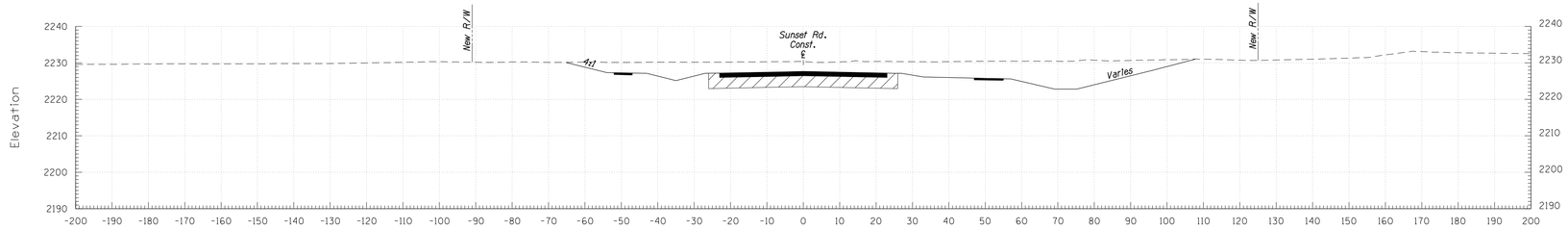

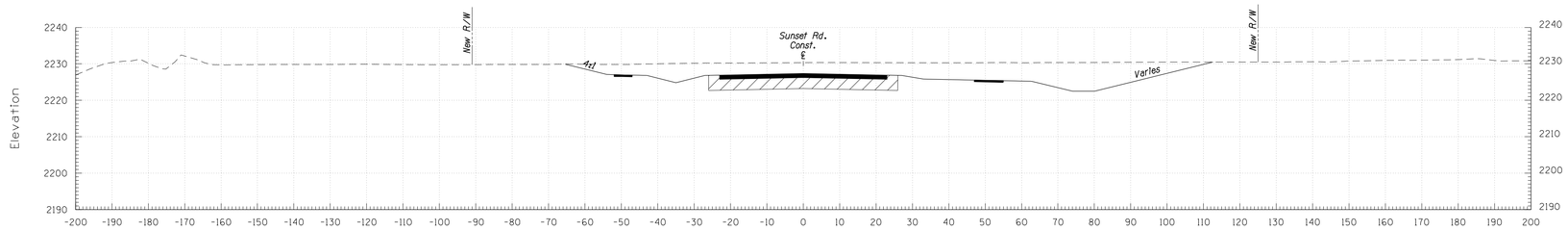

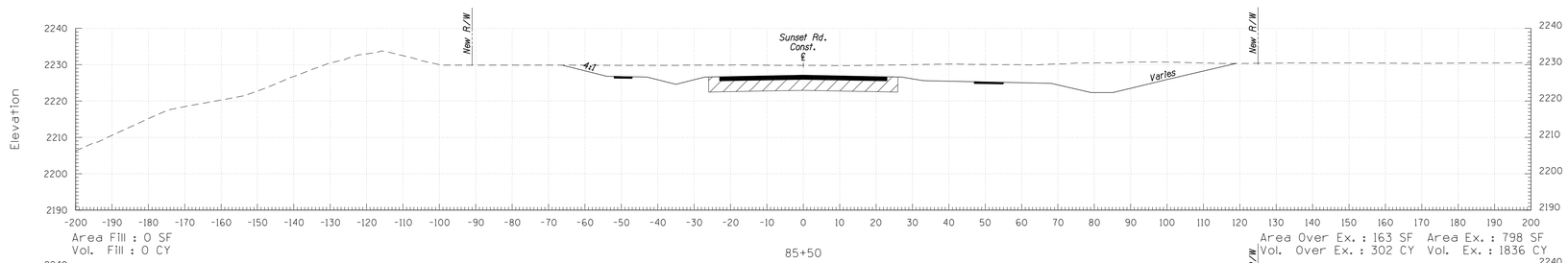

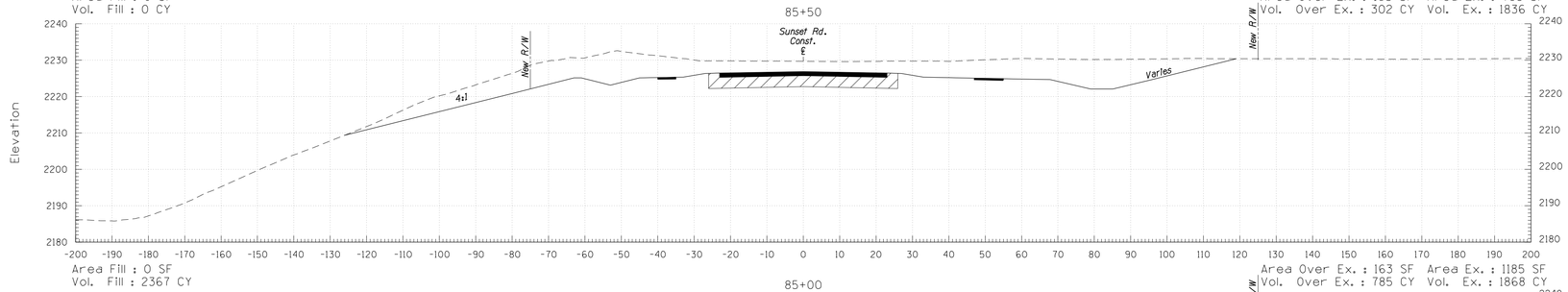

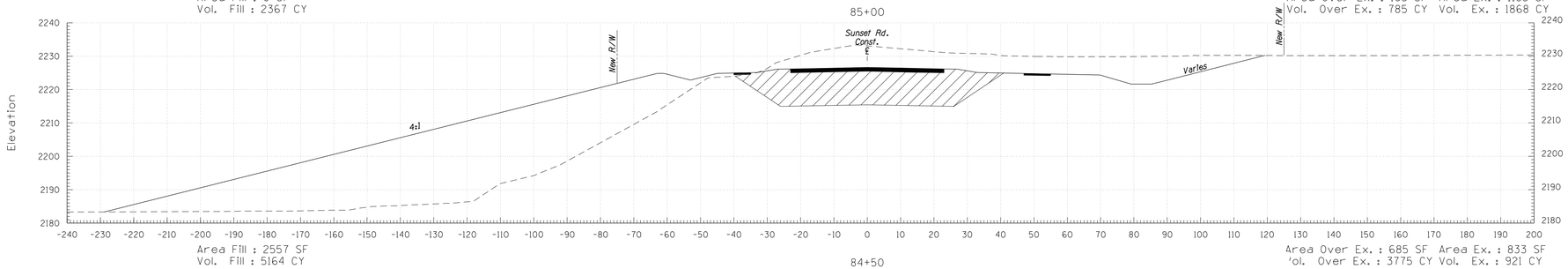

SUNSET ROAD – SILVERBELL ROAD TO I-10 – PROJECT NO. 4RTSUN

Scale: 1"=20'	AECOM	SUNSET ROAD	Sta. 84+50 to Sta. 86+50	Sheet 9 of 22

FILE NAME: P:\60311412 Sunset Rd\900-Work\910-CAD\20-SHEETS\4RTSUN_xsec_SS8.dgn DATE: 11/13/2015 TIME: 11:05:33 AM PRINTED BY: MurrietaR

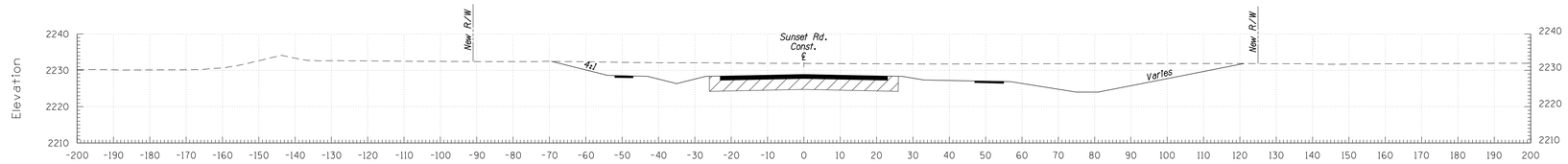

Area Fill : 0 SF
Vol. Fill : 0 CY

89+00

Area Over Ex. : 163 SF Area Ex. : 839 SF
Vol. Over Ex. : 302 CY Vol. Ex. : 1641 CY

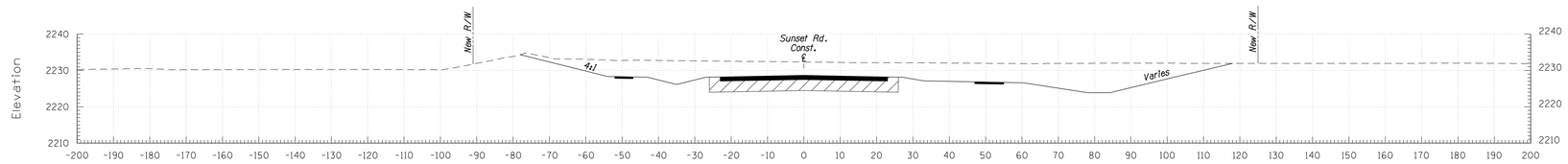

Area Fill : 0 SF
Vol. Fill : 0 CY

88+50

Area Over Ex. : 163 SF Area Ex. : 933 SF
Vol. Over Ex. : 302 CY Vol. Ex. : 1780 CY

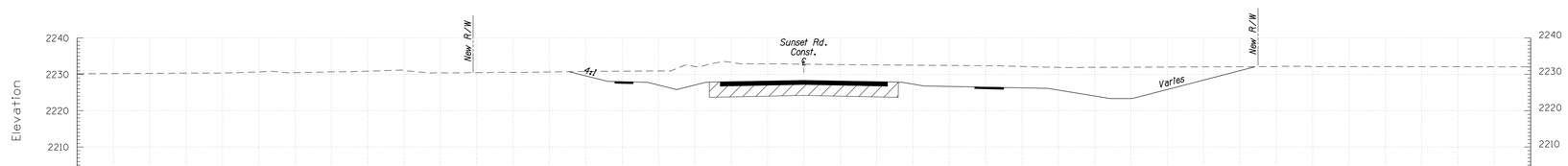

Area Fill : 0 SF
Vol. Fill : 0 CY

88+00

Area Over Ex. : 163 SF Area Ex. : 989 SF
Vol. Over Ex. : 302 CY Vol. Ex. : 1769 CY

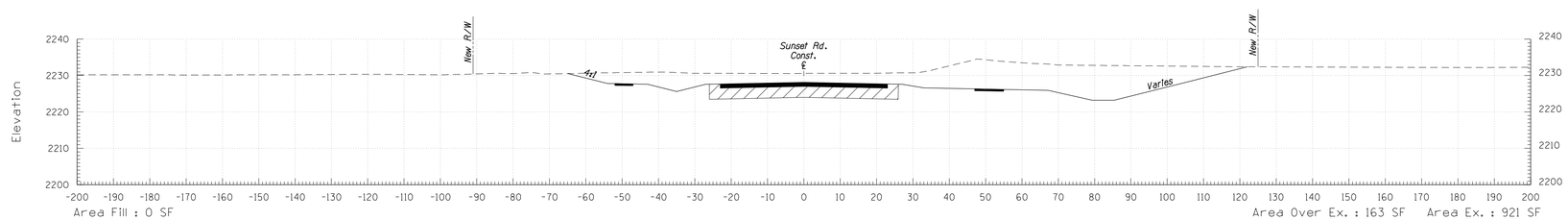

Area Fill : 0 SF
Vol. Fill : 0 CY

87+50

Area Over Ex. : 163 SF Area Ex. : 921 SF
Vol. Over Ex. : 302 CY Vol. Ex. : 1573 CY

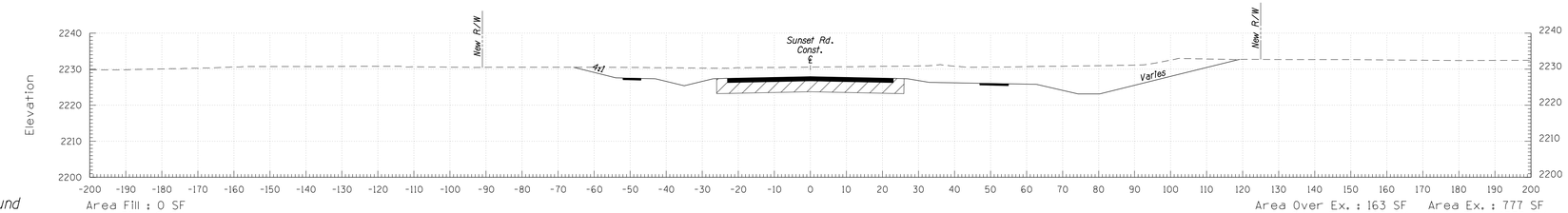

Area Fill : 0 SF
Vol. Fill : 0 CY

87+00

Area Over Ex. : 163 SF Area Ex. : 777 SF
Vol. Over Ex. : 302 CY Vol. Ex. : 1378 CY

NOTE:
To facilitate archaeology efforts, elevated level fill (ELF) was removed from station 87+00 to station 94+50 to a depth of three feet for a total quantity of approximately 16,800 CY and stockpiled within the project area. The existing ground shown in these cross sections were not revised to reflect removal of this fill dirt within this area. The contractor shall coordinate with Pima County to determine how the fill can be used within the project limits.

SUNSET ROAD – SILVERBELL ROAD TO I-10 – PROJECT NO. 4RTSUN

Scale: 1"=20'	AECOM	SUNSET ROAD	Sta. 87+00 to Sta. 89+00	Sheet 10 of 22

FILE NAME: P:\60311412 Sunset Rd\900-Work\910-CAD\20-SHEETS\4RTSUN_xsec_SS9.dgn DATE: 11/13/2015 TIME: 11:06:16 AM PRINTED BY: MurrietaR

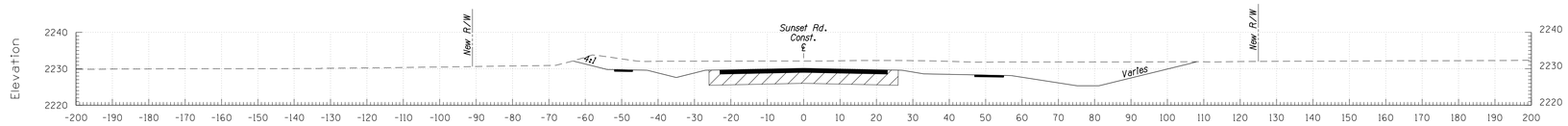

Area Fill : 0 SF
Vol. Fill : 0 CY

91+50

Area Over Ex. : 163 SF Area Ex. : 617 SF
Vol. Over Ex. : 302 CY Vol. Ex. : 1201 CY

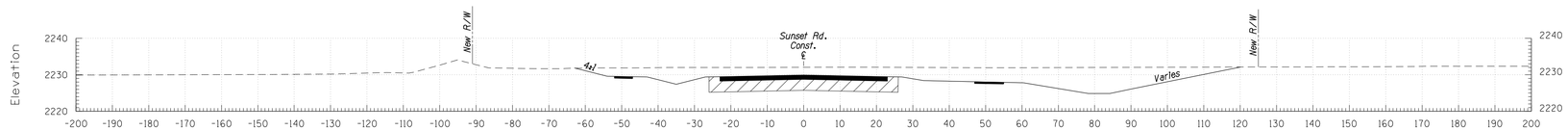

Area Fill : 0 SF
Vol. Fill : 0 CY

91+00

Area Over Ex. : 163 SF Area Ex. : 680 SF
Vol. Over Ex. : 302 CY Vol. Ex. : 1294 CY

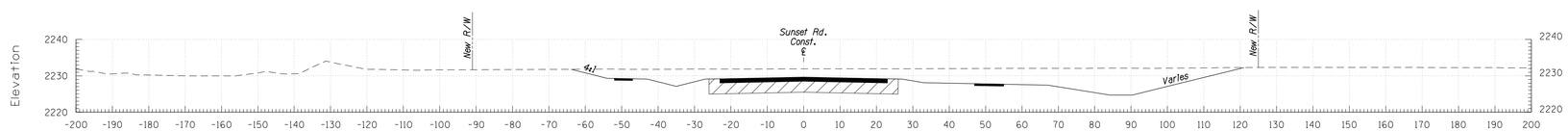

Area Fill : 0 SF
Vol. Fill : 0 CY

90+50

Area Over Ex. : 163 SF Area Ex. : 718 SF
Vol. Over Ex. : 302 CY Vol. Ex. : 1356 CY

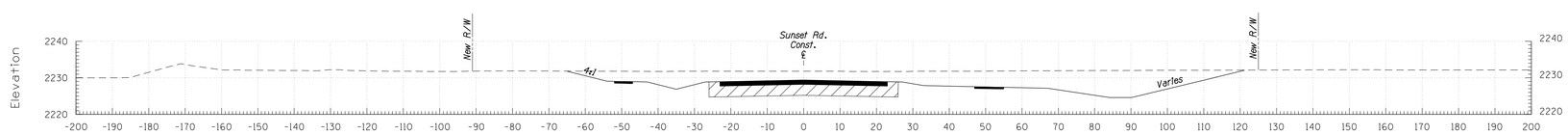

Area Fill : 0 SF
Vol. Fill : 0 CY

90+00

Area Over Ex. : 163 SF Area Ex. : 746 SF
Vol. Over Ex. : 302 CY Vol. Ex. : 1413 CY

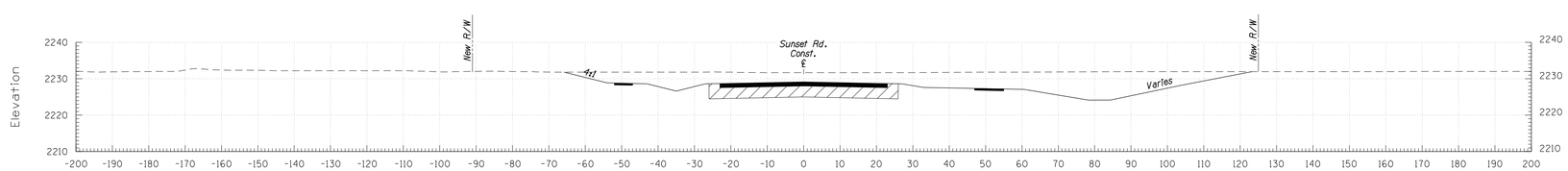

Area Fill : 0 SF
Vol. Fill : 0 CY

89+50

Area Over Ex. : 163 SF Area Ex. : 780 SF
Vol. Over Ex. : 302 CY Vol. Ex. : 1499 CY

NOTE:
To facilitate archaeology efforts, elevated level fill (ELF) was removed from station 87+00 to station 94+50 to a depth of three feet for a total quantity of approximately 16,800 CY and stockpiled within the project area. The existing ground shown in these cross sections were not revised to reflect removal of this fill dirt within this area. The contractor shall coordinate with Pima County to determine how the fill can be used within the project limits.

Scale: 1"=20'

AECOM

SUNSET ROAD

Sta. 89+50 to Sta. 91+50

Sheet 11 of 22

SUNSET ROAD – SILVERBELL ROAD TO I-10 – PROJECT NO. 4RTSUN

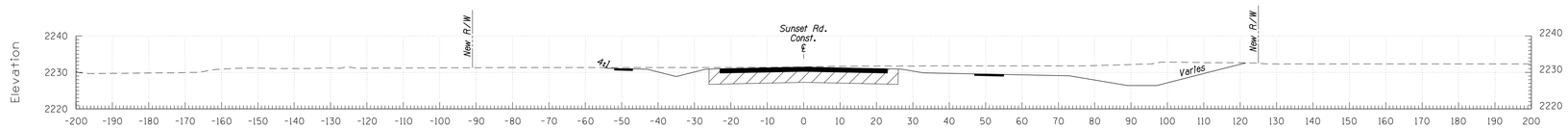

Area Fill : 0 SF
Vol. Fill : 0 CY

94+00

Area Over Ex. : 163 SF Area Ex. : 400 SF
Vol. Over Ex. : 302 CY Vol. Ex. : 815 CY

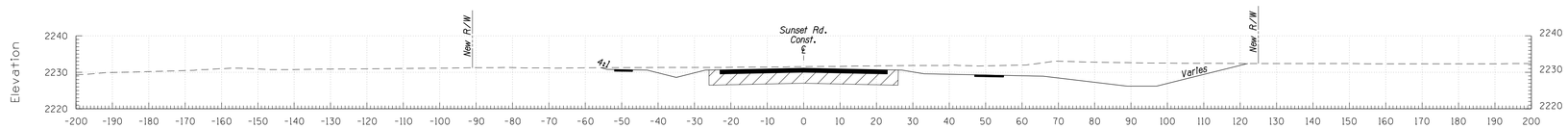

Area Fill : 0 SF
Vol. Fill : 0 CY

93+50

Area Over Ex. : 163 SF Area Ex. : 480 SF
Vol. Over Ex. : 302 CY Vol. Ex. : 893 CY

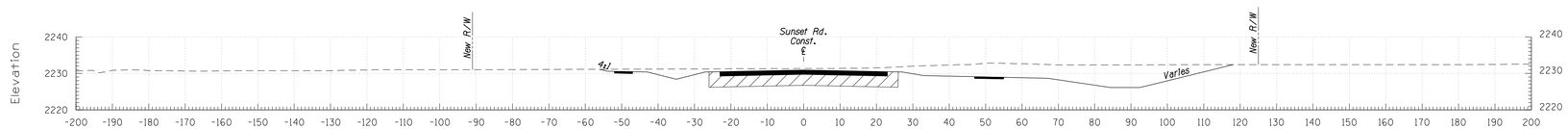

Area Fill : 0 SF
Vol. Fill : 0 CY

93+00

Area Over Ex. : 163 SF Area Ex. : 484 SF
Vol. Over Ex. : 302 CY Vol. Ex. : 932 CY

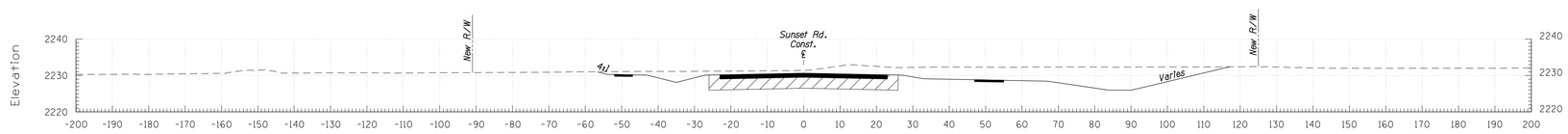

Area Fill : 0 SF
Vol. Fill : 0 CY

92+50

Area Over Ex. : 163 SF Area Ex. : 523 SF
Vol. Over Ex. : 302 CY Vol. Ex. : 1021 CY

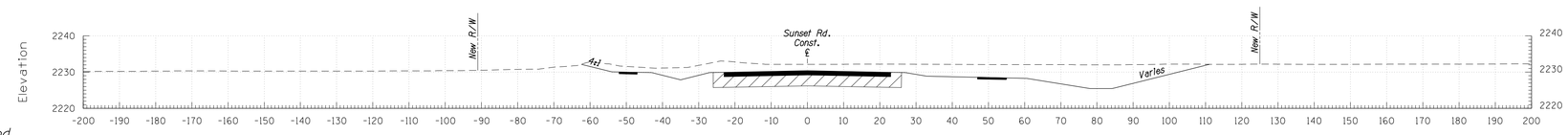

Area Fill : 0 SF
Vol. Fill : 0 CY

92+00

Area Over Ex. : 163 SF Area Ex. : 580 SF
Vol. Over Ex. : 302 CY Vol. Ex. : 1108 CY

NOTE:
To facilitate archaeology efforts, elevated level fill (ELF) was removed from station 87+00 to station 94+50 to a depth of three feet for a total quantity of approximately 16,800 CY and stockpiled within the project area. The existing ground shown in these cross sections were not revised to reflect removal of this fill dirt within this area. The contractor shall coordinate with Pima County to determine how the fill can be used within the project limits.

SUNSET ROAD – SILVERBELL ROAD TO I-10 – PROJECT NO. 4RTSUN

Scale: 1"=20'	AECOM	SUNSET ROAD	Sta. 92+00 to Sta. 94+00	Sheet 12 of 22

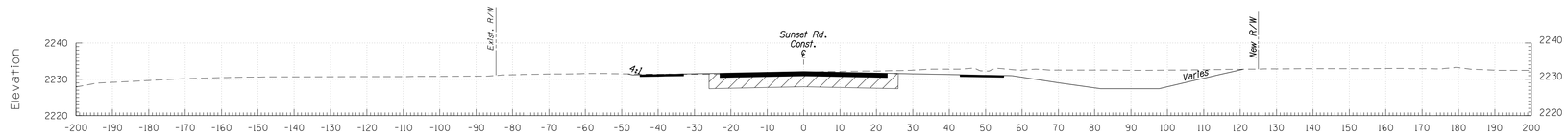

Area Fill : 0 SF
Vol. Fill : 3 CY

96+50

Area Over Ex. : 162 SF Area Ex. : 340 SF
Vol. Over Ex. : 301 CY Vol. Ex. : 638 CY

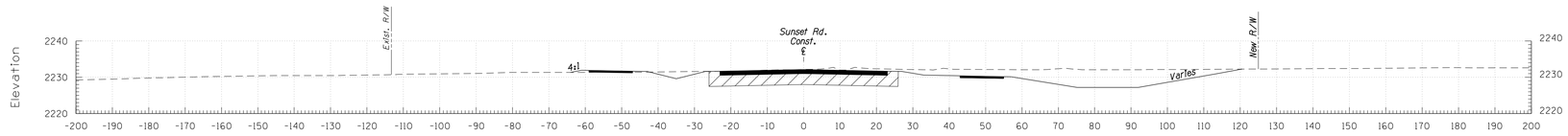

Area Fill : 3 SF
Vol. Fill : 5 CY

96+00

Area Over Ex. : 163 SF Area Ex. : 350 SF
Vol. Over Ex. : 302 CY Vol. Ex. : 681 CY

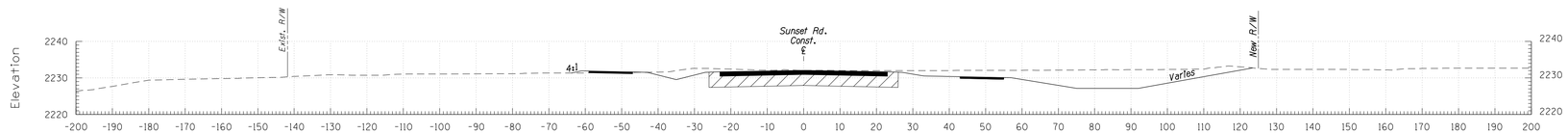

Area Fill : 2 SF
Vol. Fill : 2 CY

95+50

Area Over Ex. : 163 SF Area Ex. : 385 SF
Vol. Over Ex. : 302 CY Vol. Ex. : 676 CY

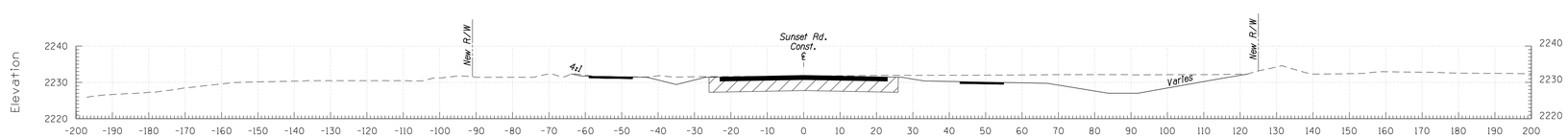

Area Fill : 0 SF
Vol. Fill : 0 CY

95+00

Area Over Ex. : 163 SF Area Ex. : 344 SF
Vol. Over Ex. : 302 CY Vol. Ex. : 641 CY

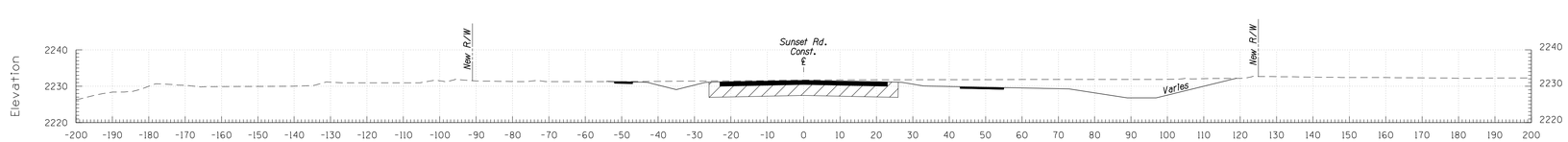

Area Fill : 0 SF
Vol. Fill : 0 CY

94+50

Area Over Ex. : 163 SF Area Ex. : 348 SF
Vol. Over Ex. : 302 CY Vol. Ex. : 692 CY

SUNSET ROAD – SILVERBELL ROAD TO I-10 – PROJECT NO. 4RTSUN

Scale: 1"=20'	AECOM	SUNSET ROAD	Sta. 94+50 to Sta. 96+50	Sheet 13 of 22

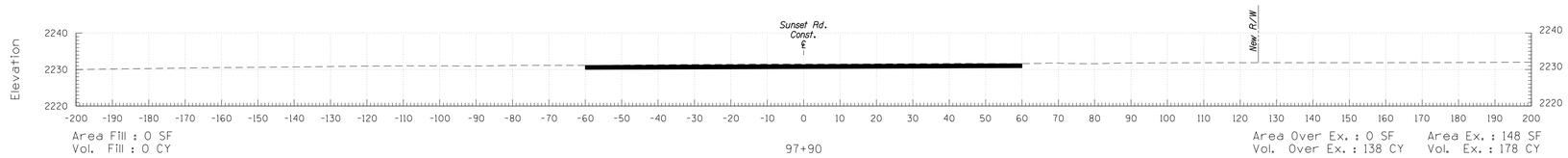

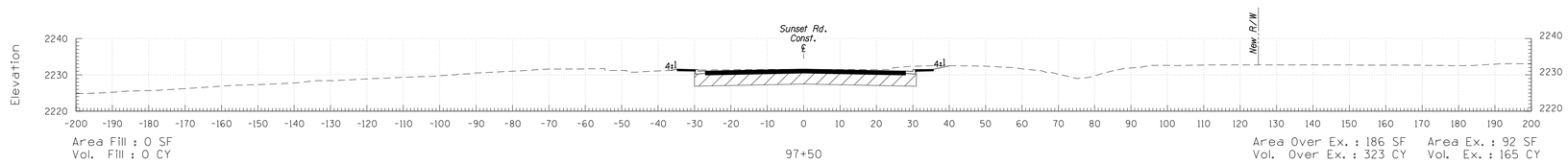

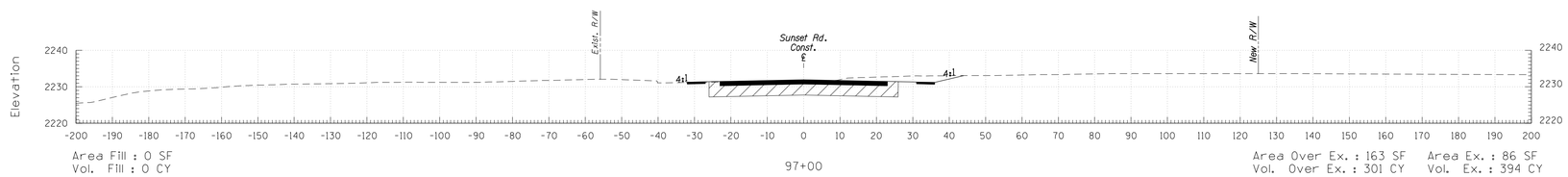

SUNSET ROAD – SILVERBELL ROAD TO I-10 – PROJECT NO. 4RTSUN

Scale: 1"=20'

AECOM

SUNSET ROAD

Sta. 97+00 to Sta. 97+90

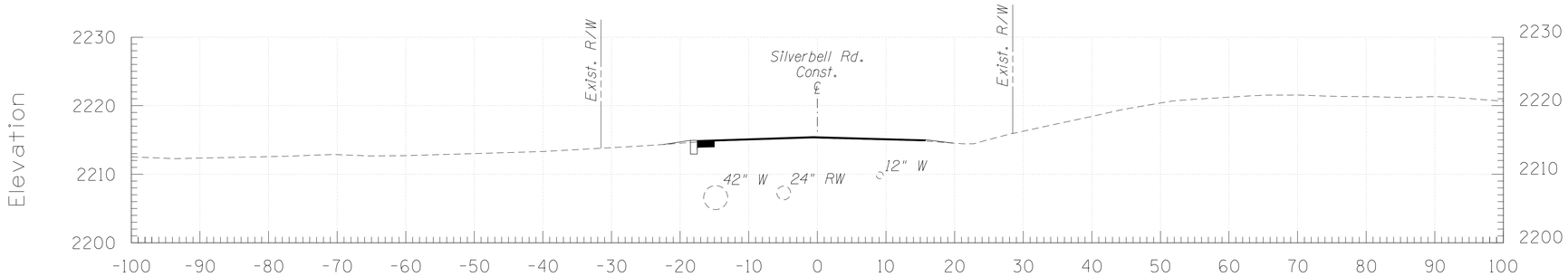

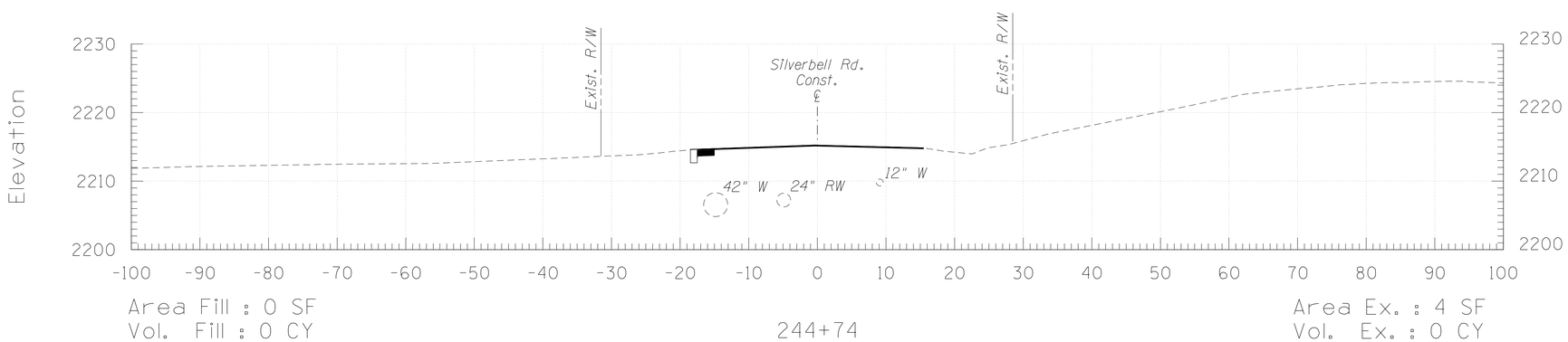

SUNSET ROAD – SILVERBELL ROAD TO I-10 – PROJECT NO. 4RTSUN

Scale: 1"=10'	AECOM	SILVERBELL ROAD	Sta. 244+74 to Sta. 245+00	Sheet 15 of 22

FILE NAME: P:\60311412 Sunset Rd\900-Work\910-CAD\20-SHEETS\4RTSUN_xsec_SB1.dgn DATE: 11/13/2015 TIME: 11:08:56 AM PRINTED BY: MurrietaR

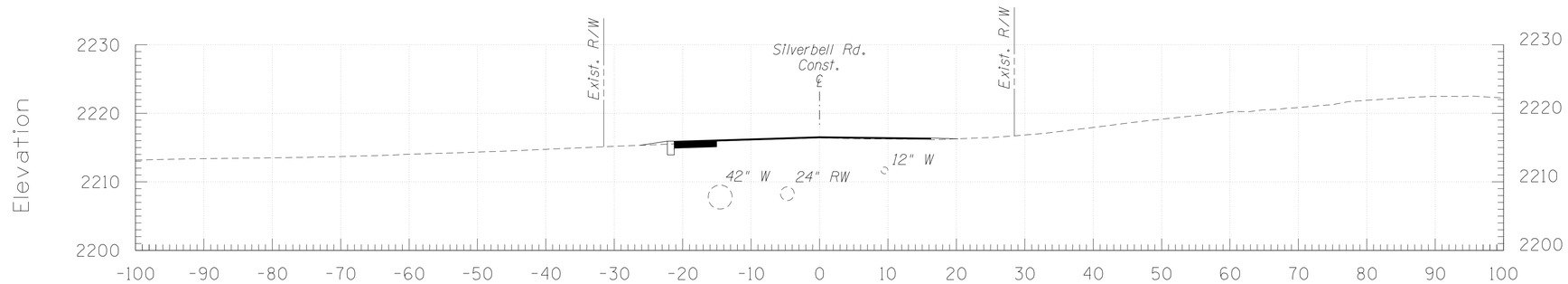

Area Fill : 0 SF
Vol. Fill : 0 CY

247+00

Area Ex. : 6 SF
Vol. Ex. : 21 CY

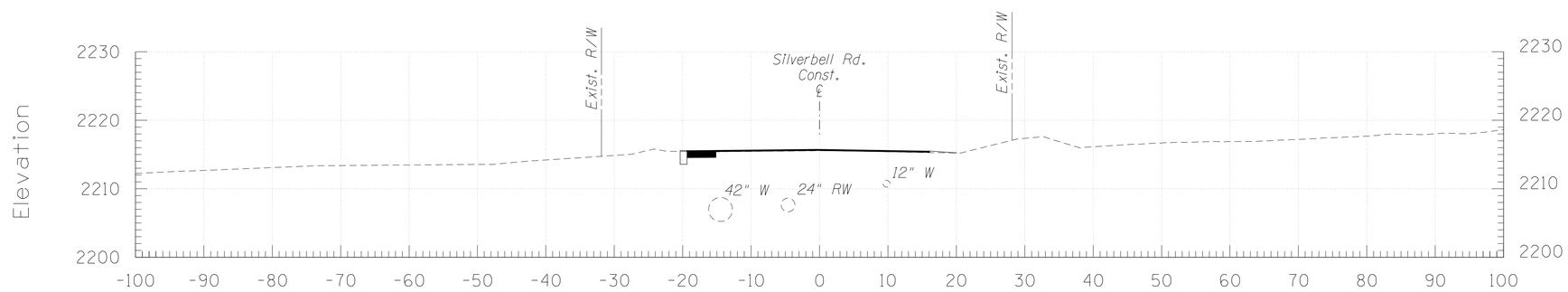

Area Fill : 0 SF
Vol. Fill : 0 CY

246+00

Area Ex. : 5 SF
Vol. Ex. : 17 CY

SUNSET ROAD – SILVERBELL ROAD TO I-10 – PROJECT NO. 4RTSUN

Scale: 1"=10'

AECOM

SILVERBELL ROAD

Sta. 246+00 to Sta. 247+00

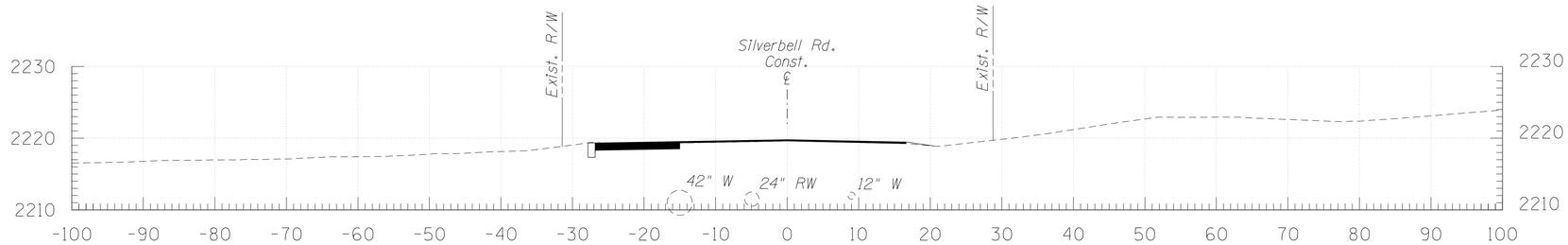

Area Fill : 0 SF
Vol. Fill : 0 CY

250+00

Area Ex. : 11 SF
Vol. Ex. : 36 CY

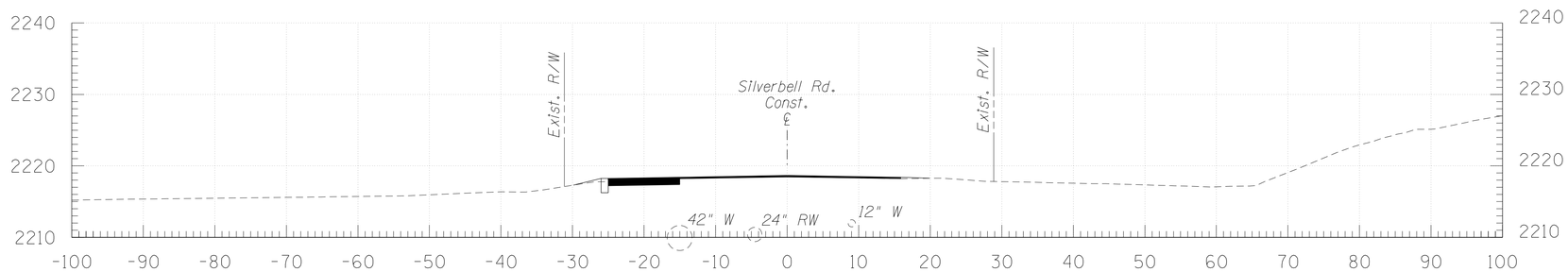

Area Fill : 0 SF
Vol. Fill : 0 CY

249+00

Area Ex. : 9 SF
Vol. Ex. : 31 CY

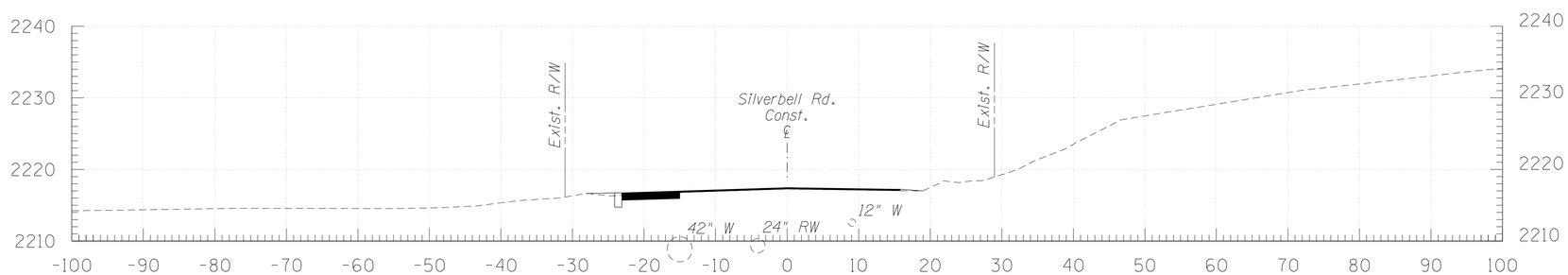

Area Fill : 0 SF
Vol. Fill : 0 CY

248+00

Area Ex. : 8 SF
Vol. Ex. : 26 CY

SUNSET ROAD – SILVERBELL ROAD TO I-10 – PROJECT NO. 4RTSUN

Scale: 1"=10' | AECOM | SILVERBELL ROAD | Sta. 248+00 to Sta. 250+00 | Sheet 17 of 22

FILE NAME: P:\60311412 Sunset Rd\900-Work\910-CAD\20-SHEETS\4RTSUN_xsec_SB3.dgn DATE: 11/13/2015 TIME: 11:10:07 AM PRINTED BY: MurrietaR

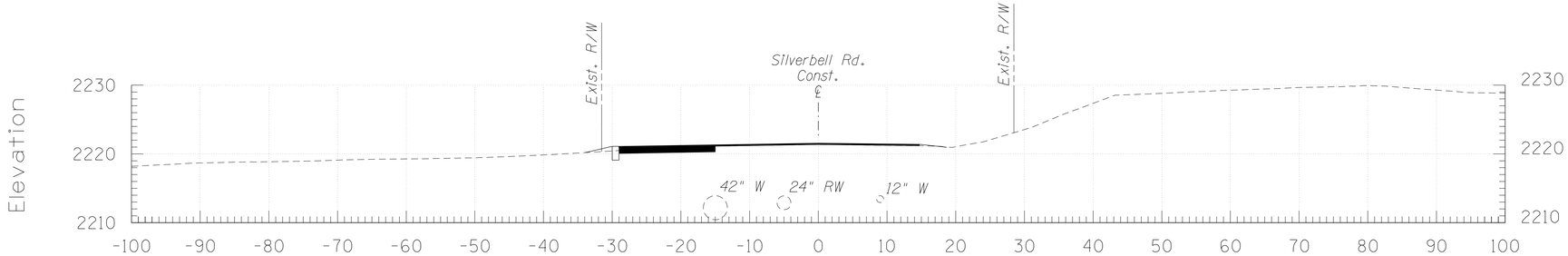

Area Fill : 0 SF
Vol. Fill : 37 CY

253+00

Area Ex. : 11 SF
Vol. Ex. : 44 CY

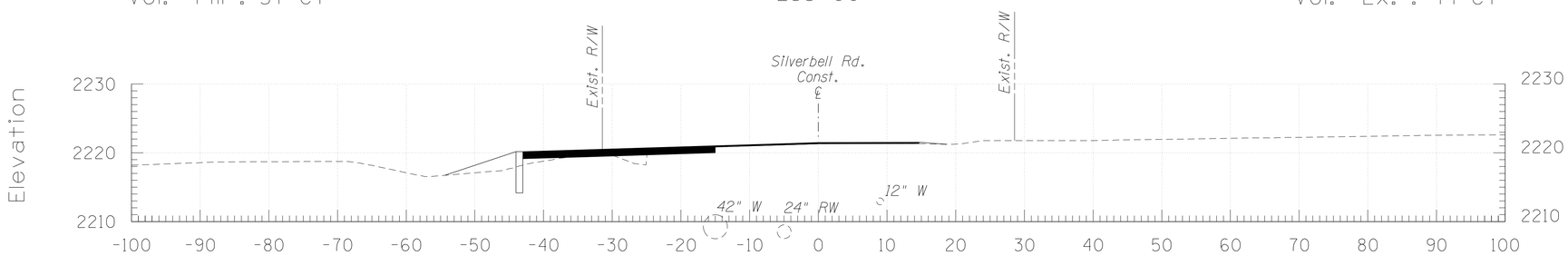

Area Fill : 20 SF
Vol. Fill : 73 CY

252+00

Area Ex. : 13 SF
Vol. Ex. : 53 CY

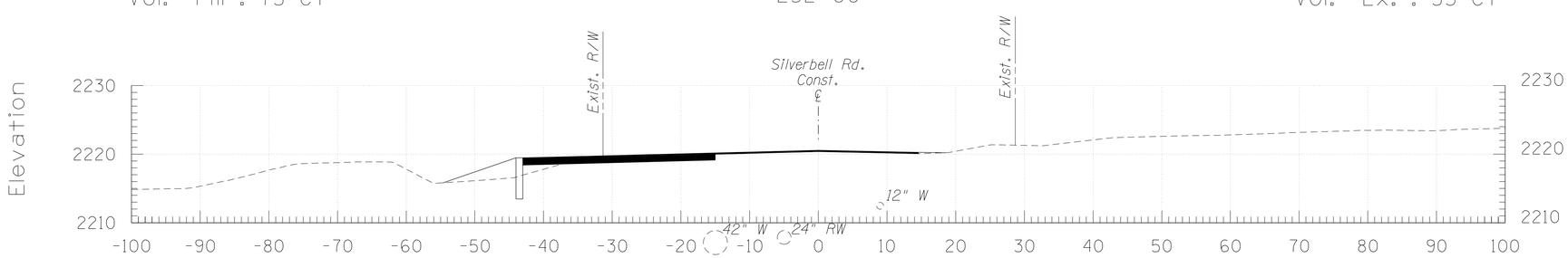

Area Fill : 20 SF
Vol. Fill : 36 CY

251+00

Area Ex. : 16 SF
Vol. Ex. : 48 CY

SUNSET ROAD – SILVERBELL ROAD TO I-10 – PROJECT NO. 4RTSUN

Scale: 1"=10'

AECOM

SILVERBELL ROAD

Sta. 251+00 to Sta. 253+00

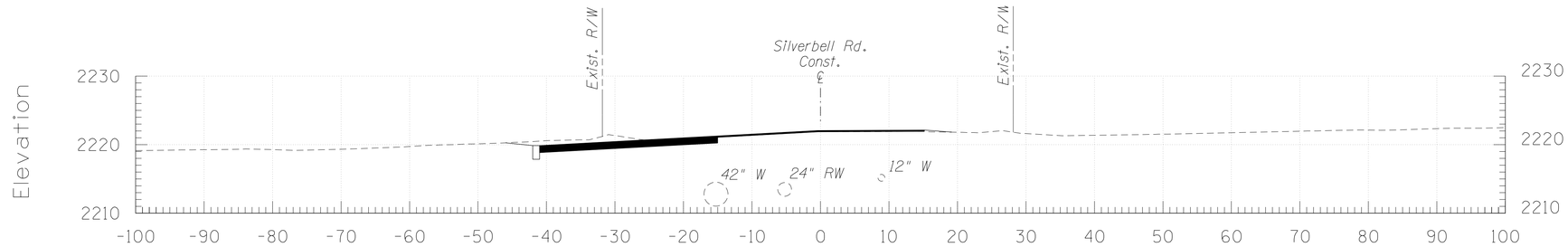

Area Fill : 0 SF
Vol. Fill : 0 CY

256+00

Area Ex. : 38 SF
Vol. Ex. : 112 CY

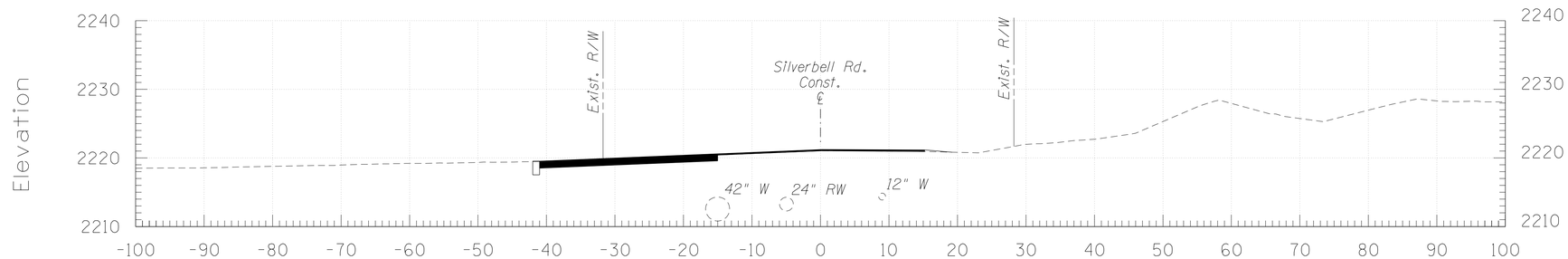

Area Fill : 0 SF
Vol. Fill : 0 CY

255+00

Area Ex. : 22 SF
Vol. Ex. : 90 CY

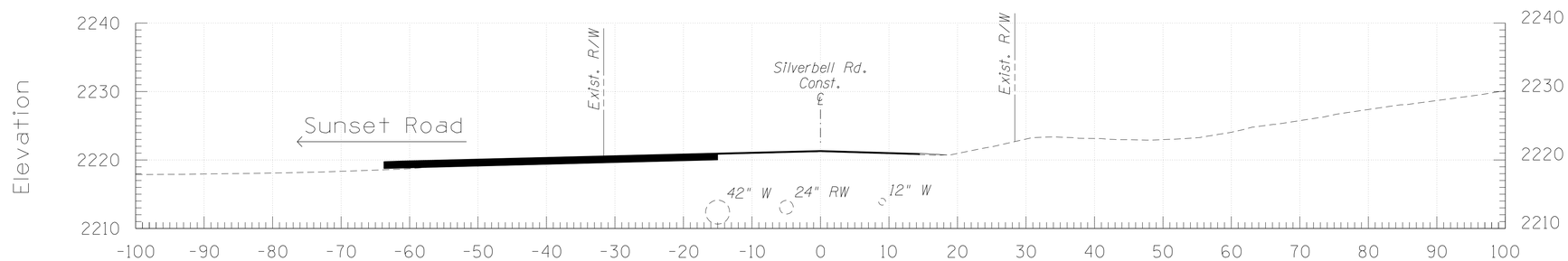

Area Fill : 0 SF
Vol. Fill : 0 CY

254+00

Area Ex. : 26 SF
Vol. Ex. : 68 CY

SUNSET ROAD – SILVERBELL ROAD TO I-10 – PROJECT NO. 4RTSUN

Scale: 1"=10'	AECOM	SILVERBELL ROAD	Sta. 254+00 to Sta. 256+00	Sheet 19 of 22

FILE NAME: P:\60311412 Sunset Rd\900-Work\910-CAD\20-SHEETS\4RTSUN_xsec_SB5.dgn DATE: 11/13/2015 TIME: 11:11:05 AM PRINTED BY: MurrietaR

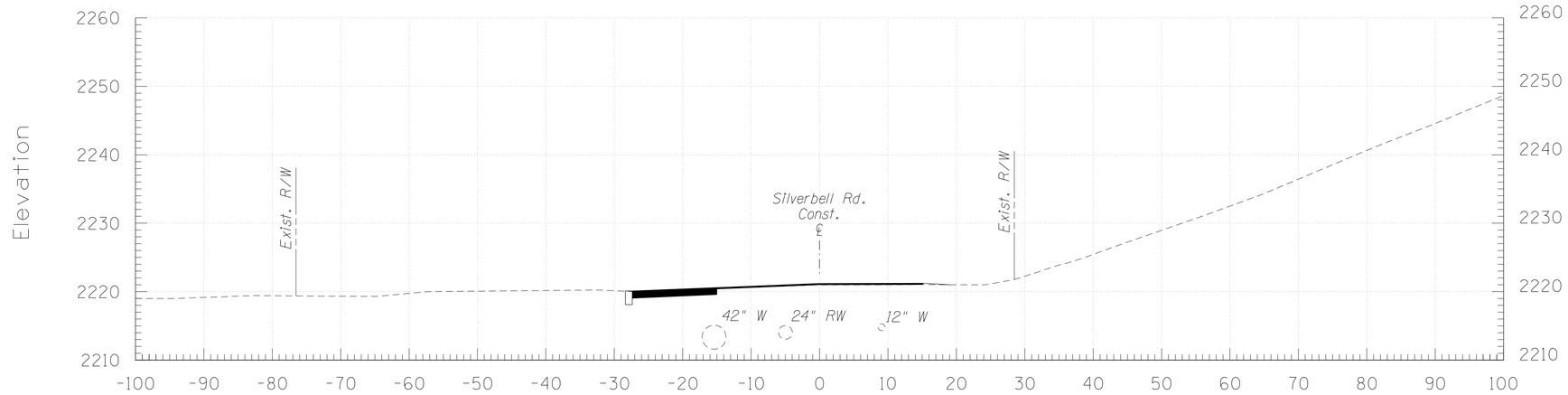

Area Fill : 0 SF
Vol. Fill : 0 CY

259+00

Area Ex. : 13 SF
Vol. Ex. : 51 CY

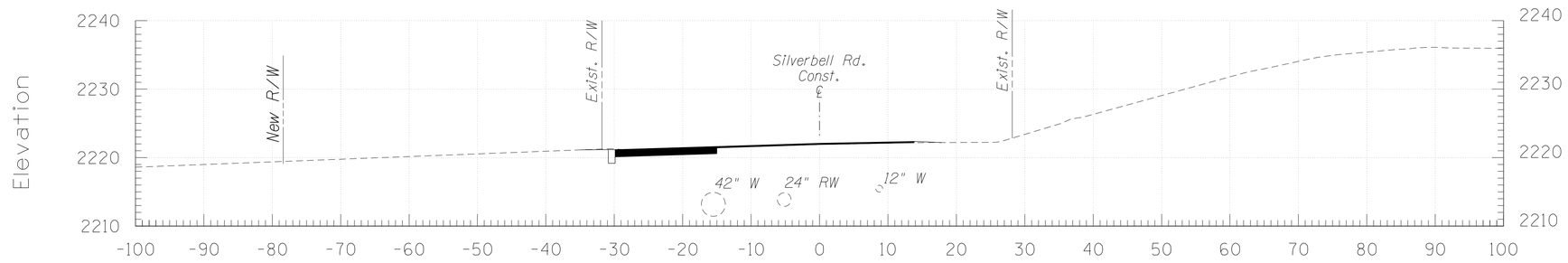

Area Fill : 0 SF
Vol. Fill : 0 CY

258+00

Area Ex. : 15 SF
Vol. Ex. : 84 CY

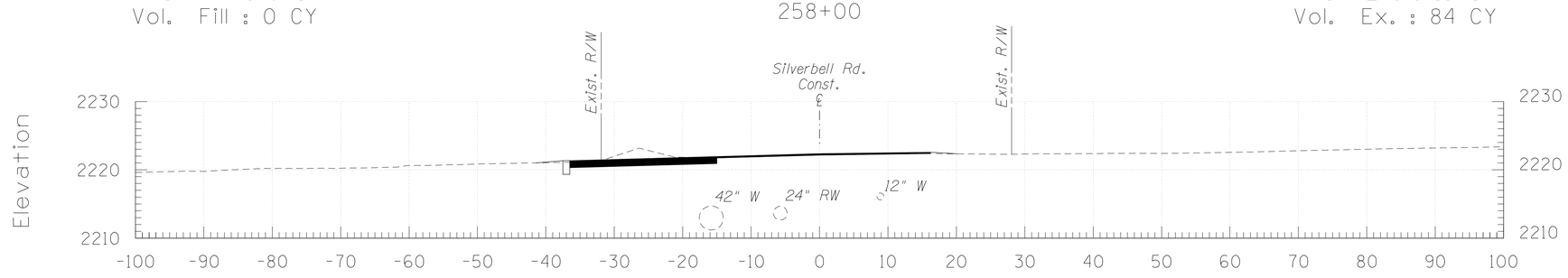

Area Fill : 0 SF
Vol. Fill : 0 CY

257+00

Area Ex. : 31 SF
Vol. Ex. : 127 CY

SUNSET ROAD – SILVERBELL ROAD TO I-10 – PROJECT NO. 4RTSUN

Scale: 1"=10'	AECOM	SILVERBELL ROAD	Sta. 257+00 to Sta. 259+00	Sheet 20 of 22

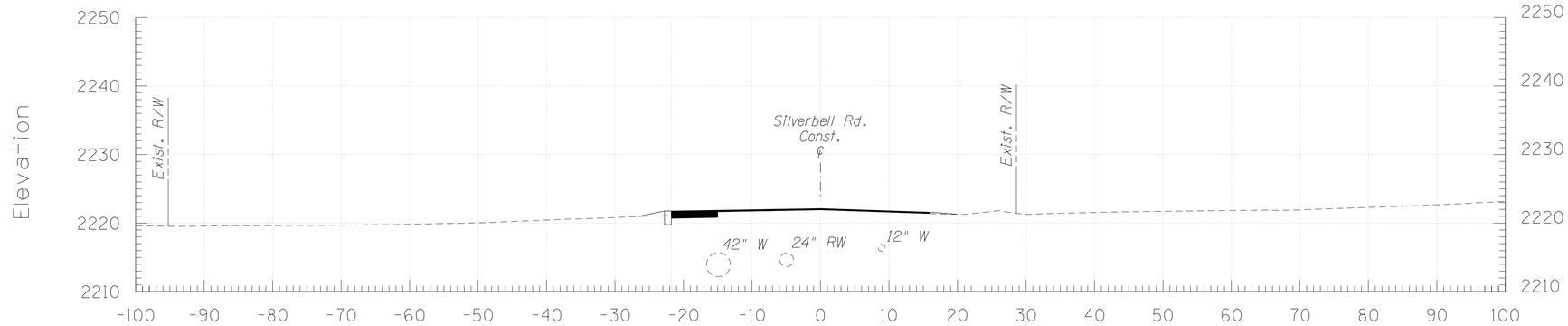

Area Fill : 0 SF
Vol. Fill : 0 CY

262+00

Area Ex. : 6 SF
Vol. Ex. : 27 CY

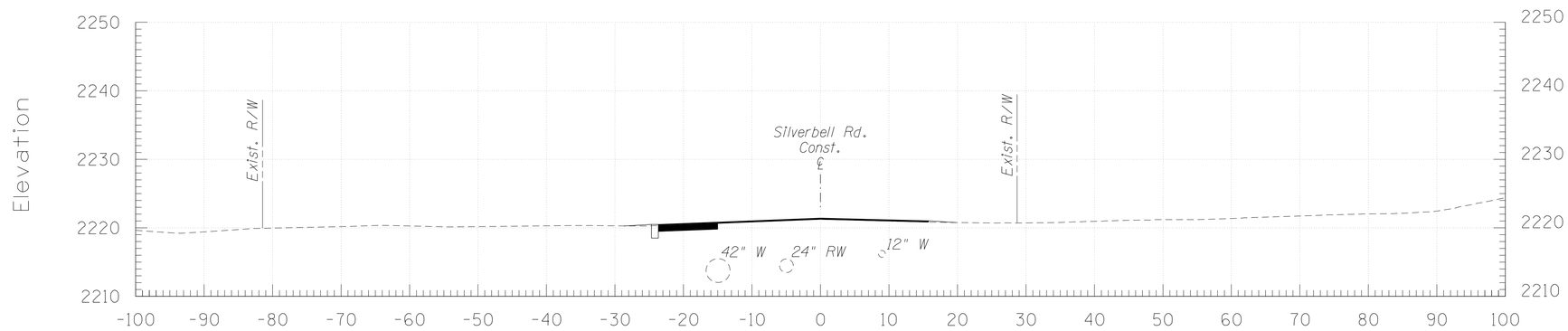

Area Fill : 0 SF
Vol. Fill : 0 CY

261+00

Area Ex. : 9 SF
Vol. Ex. : 37 CY

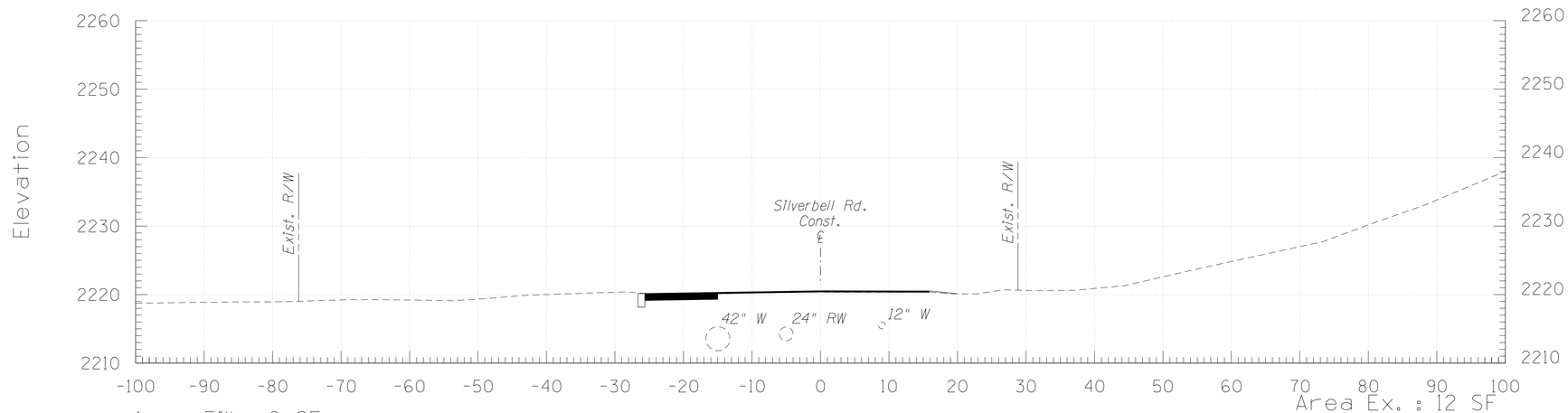

Area Fill : 0 SF
Vol. Fill : 0 CY

260+00

Area Ex. : 12 SF
Vol. Ex. : 45 CY

SUNSET ROAD – SILVERBELL ROAD TO I-10 – PROJECT NO. 4RTSUN

Scale: 1"=10'	AECOM	SILVERBELL ROAD	Sta. 260+00 to Sta. 262+00	Sheet 21 of 22

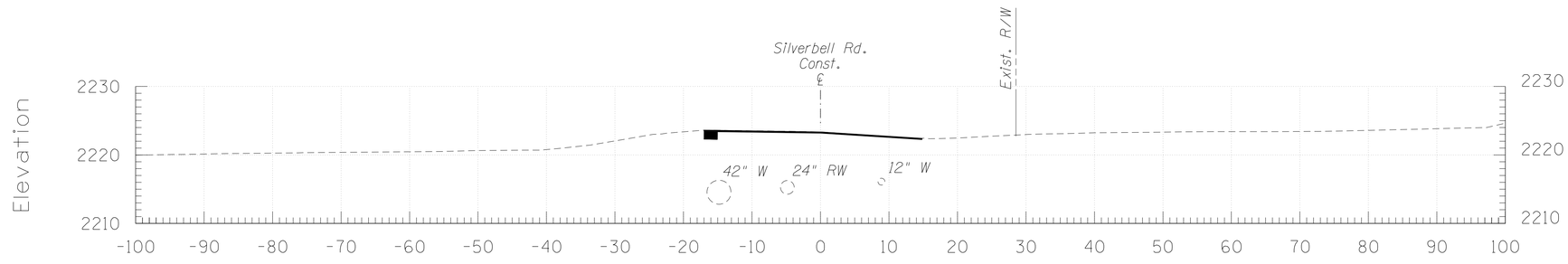

Area Fill : 0 SF
Vol. Fill : 0 CY

264+89

Area Ex. : 0 SF
Vol. Ex. : 7 CY

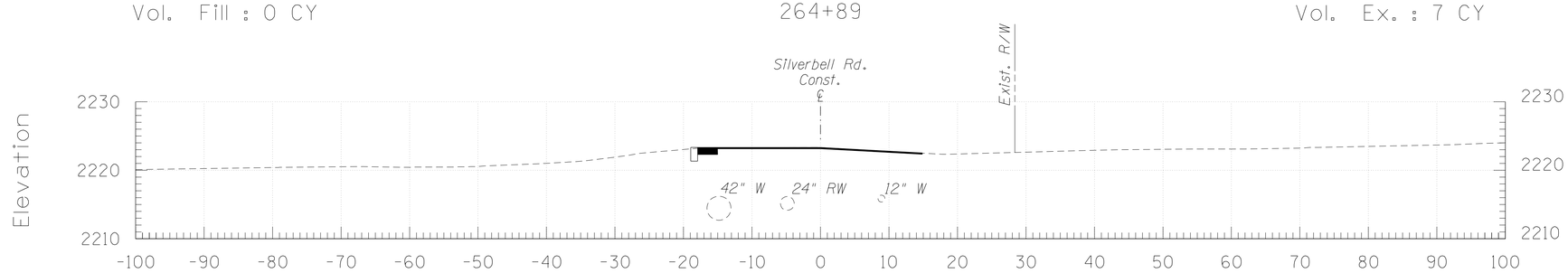

Area Fill : 0 SF
Vol. Fill : 0 CY

264+00

Area Ex. : 4 SF
Vol. Ex. : 17 CY

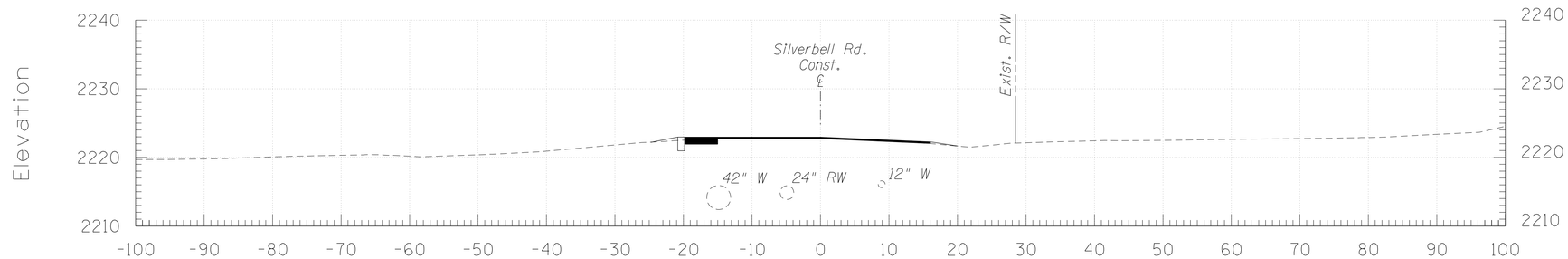

Area Fill : 0 SF
Vol. Fill : 0 CY

263+00

Area Ex. : 5 SF
Vol. Ex. : 20 CY

SUNSET ROAD – SILVERBELL ROAD TO I-10 – PROJECT NO. 4RTSUN

Scale: 1"=10'	AECOM	SILVERBELL ROAD	Sta. 263+00 to Sta. 264+89	Sheet 22 of 22

FILE NAME: P:\60311412 Sunset Rd\900-Work\910-CAD\20-SHEETS\4RTSUN_xsec_SB8.dgn DATE: 11/13/2015 TIME: 11:12:44 AM PRINTED BY: MurrietaR