FINAL

Northeast Area Arterial Study

Traffic Engineering Report

Prepared for:
Pima County Department of Transportation

Prepared by:

CEI *Catalina Engineering, Inc.*

February 2004

CONTENTS

1. INTRODUCTION AND BACKGROUND 1

2. EXISTING TRAFFIC CONDITIONS 2
   - Traffic Volumes 2
   - Access 2
   - Accident History 2

3. FUTURE TRAFFIC 2
   - Turning Movement Volumes 7

4. CAPACITY ANALYSIS 13
   - Intersections 13
   - Roadway Segments 20
   - Alternatives 21
     - Sunrise Drive, Craycroft Road to Kolb Road 21
     - River Road, Craycroft Road to Sabino Canyon Road 24
     - Craycroft Road, River Road to Sunrise Drive 24
     - Kolb Road, Sabino Canyon Road to Sunrise Drive 25

5. ALTERNATIVE COST ESTIMATES 25
   - Craycroft Road, River Road to Sunrise Drive 27
   - Kolb Road, Sabino Canyon Road to Sunrise Drive 27
   - Sunrise Drive, Craycroft Road to Kolb Road 27
   - River Road, Craycroft Road to Sabino Canyon Road 28

6. CONCLUSIONS 28

APPENDICES

APPENDIX A. TURNING MOVEMENT VOLUMES

APPENDIX B. INTERSECTION CAPACITY ANALYSIS WORKSHEETS

APPENDIX C. COST ESTIMATE WORKSHEETS

EXHIBITS

Exhibit 1. Existing and Historic Traffic Volumes 3
Exhibit 2. Existing Traffic Factors 4
Exhibit 3. Access Point Summary 4
Exhibit 4. Intersection Accident Statistics 5
Exhibit 5. Segment Accident Statistics 5
Exhibit 6. PAG Projected Average Daily Traffic Volumes 6
Exhibit 7. Summary of Projected Traffic Growth 8
Exhibit 8. Screen Line Volumes 8
Exhibit 9. Recommended 2025 Traffic Volumes 9
Exhibit 10. Intersection Turning Movement Volumes, Sunrise Drive 10
Exhibit 11. Intersection Turning Movement Volumes, Craycroft Road 11
Exhibit 12. Intersection Turning Movement Volumes, Kolb Road 12
Exhibit 13. Intersection Capacity Analysis Results, Sunrise Drive at Craycroft Road 14
Exhibit 14. Intersection Capacity Analysis Results, Sunrise Drive at Kolb Road 15
Exhibit 15. Intersection Capacity Analysis Results, Craycroft Road at River Road 16
Exhibit 16. Intersection Capacity Analysis Results, Craycroft Road at Territory Drive 17
Exhibit 17. Intersection Capacity Analysis Results, Kolb Road at Sabino Canyon Road 18
Exhibit 18. Intersection Capacity Analysis Results, Kolb Road at Snyder Road 19
Exhibit 19. Level of Service Criteria 21
Exhibit 20. Estimated Average Travel Speed and Level of Service 22
Exhibit 21. Estimated Preliminary Project Costs 25

1. INTRODUCTION AND BACKGROUND

Northeast metropolitan Pima County encompasses the area bounded by Swan Road on the west, Sabino Canyon Road on the east, River Road on the south, and the Santa Catalina Mountains on the north. The roadway network that serves this area generally consists of discontinuous and circuitous local streets and collectors that tie into arterials spaced at one to two mile intervals. These arterials, which include Swan Road, Craycroft Road, Kolb Road, River Road, and Sunrise Drive, serve not only the northeast area, but also regional trips between the eastern and northwest areas of Pima County. Sunrise Drive-Skyline Drive-Ina Road forms the northernmost east-west route in the metropolitan area.

Capacity and safety improvements for Craycroft Road, Kolb Road, and Sunrise Drive are included in the 2025 Regional Transportation Plan for Pima County. In addition, funding for the construction of these improvements is included in the Pima County roadway improvement bond package that was approved in 1997. Widening of the section of Sunrise Drive from Swan Road to Craycroft Road was completed in 2003, while initial planning and engineering for Sunrise Drive from Craycroft Road to Kolb Road, Kolb Road from Sabino Canyon Road to Sunrise Drive, and Craycroft Road, from River Road to Sunrise Drive, was completed in 2001.

The initial traffic engineering reports prepared for these projects recommended that each 2-lane arterial be widened to four lanes with a raised median and paved shoulders. Additional through and turn-lane capacity was also recommended at signalized intersections. These initial roadway and intersection capacity recommendations were based on the analysis of traffic projections prepared by the Pima Association of Governments (PAG) for 2020. In the three years since these initial recommendations were developed, PAG has revised the 20-year traffic projections for the arterials in the northwest area based on new demographic data issued by the Bureau of the Census. The updated traffic projections, which reflect countywide growth through 2025, are significantly lower than the previous 2020 projections for the northeast area.

As a result of the reduced traffic growth that is projected over the next 20-years within the northwest area, this study was performed to re-evaluate the roadway improvements needed to provide appropriate capacity, operations, and safety on Sunrise Drive, River Road, Craycroft Road, and Kolb Road.

2. EXISTING TRAFFIC CONDITIONS

Traffic Volumes

Existing and historic traffic volumes on the northeast area arterial network are summarized in Exhibit 1. Using available traffic count data, peak-hour traffic factors, including the directional split (D-factor), percentage of daily traffic occurring during the peak hour (K-factor), and the percentage of through trips were determined and are provided in Exhibit 2. Note that sufficient data was only available on Craycroft Road to estimate the percentage of through trips.

Access

The number of access points along each arterial is summarized in Exhibit 3. Considering the low-density residential development that is prevalent along each arterial, the volume of traffic using each access point is low to moderate during peak traffic periods. Access activity at the commercial driveways located at the Craycroft Road/River Road and Kolb Road/Sunrise Drive intersections is moderate to heavy.

Accident History

Accident statistics covering the 3-year period from January 1, 2000 to December 31, 2002, were obtained from the Pima County website. A comparison of intersection and roadway segment accident statistics on the four arterials being studied is provided in Exhibits 4 and 5. Although a detailed assessment of accidents was not performed, these summary statistics do not indicate an existing safety problem on the northwest area arterials.

3. FUTURE TRAFFIC

Twenty-year (2025) traffic projections were generated by PAG using the regional model developed for the recent Regional Transportation Plan update. Exhibit 6 presents the 2025 PAG projections, existing (2003) traffic counts, as well as the PAG 2020 projections which were used in the previous traffic reports for these roadways. Note that the 2003 data includes several counts on Sunrise Drive, River Road, Swan Road, and Craycroft Road taken in the spring and fall. These counts indicate that approximately 4,000 trips per day diverted to River Road during the widening of Sunrise Drive between Swan Road and Craycroft Road.

While it is not the intent of this report to provide detailed assessments of the prediction models, it is clear that wide variations in traffic projections are produced. Differences in model assumptions with respect to future growth, socio-economic data, trip distribution, and network

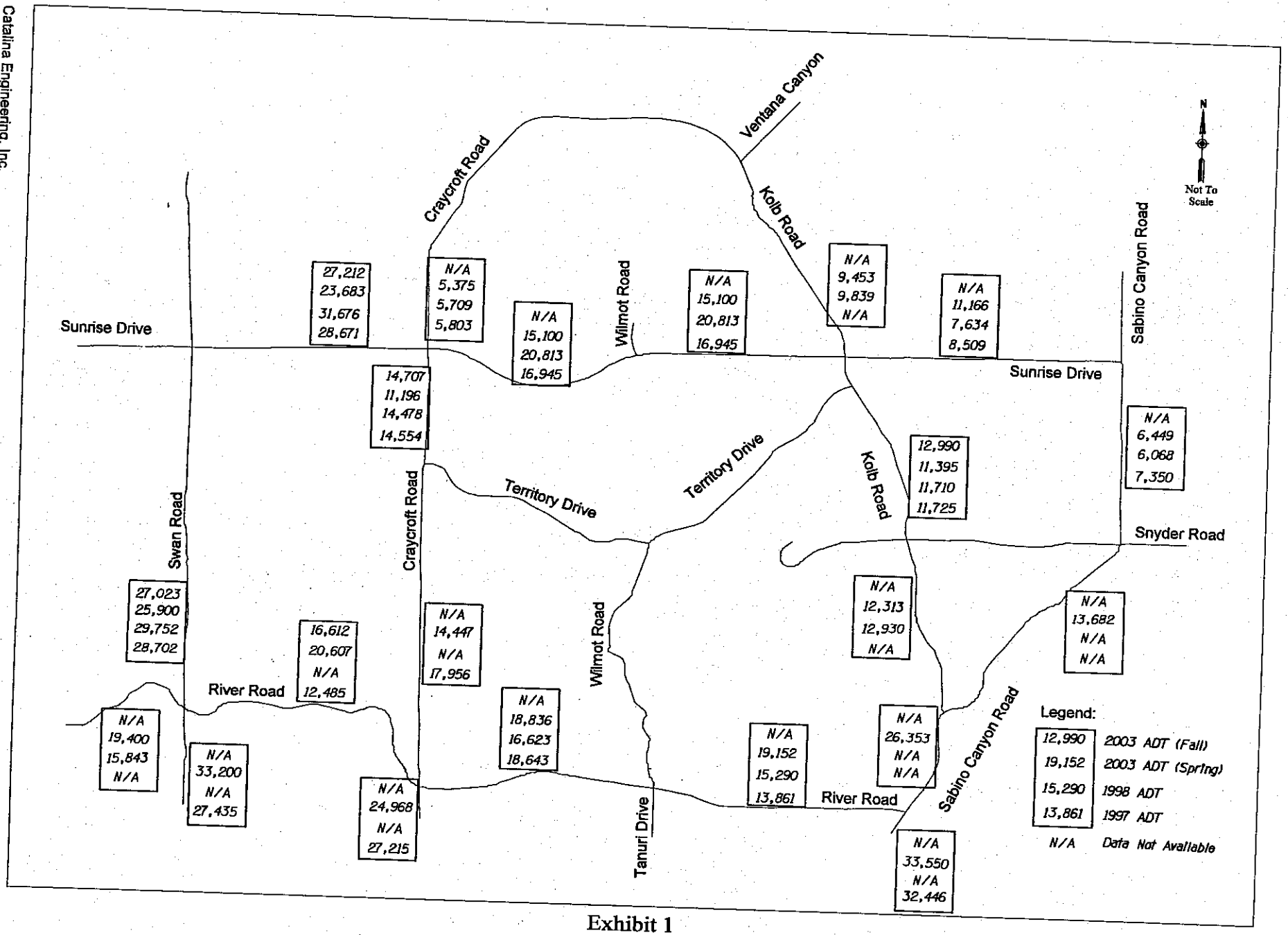

Exhibit 1
Existing and Historic Traffic Volumes

Exhibit 2. Existing Traffic Factors

Arterial Section	Peak Period	D-factor	K-factor	% Through Trips
Sunrise Drive, Craycroft Rd. to Kolb Road	AM	60 % WB	7 %	-
	PM	60 % EB	8 %	-
River Road, Craycroft Road. Sabino Canyon Road	AM	70 % WB	9 %	-
	PM	60 % WB	6 %	-
Craycroft Road, River Road to Sunrise Drive	AM	70 % SB	8 %	70 %
	PM	60 % NB	9 %	75 %
Kolb Road, Sabino Canyon Road to Sunrise Drive	AM	57 % SB	6 %	-
	PM	52 % NB	7 %	-

Exhibit 3. Access Point Summary

Roadway	Side	No. of Driveways		No. of Sidestreets	Access Points/Mile
		Residential	Commercial		
Sunrise Drive, Craycroft Rd. to Kolb Road	North	1[a]	3	4	6.3
	South	0	2	2	
River Road, Craycroft Road. Sabino Canyon Road	North	13[b]	2	11	32.0
	South	40[c]	2	9	
Craycroft Road, River Road to Sunrise Drive	West	3	0	13	9.6
	East	1	1	5	
Kolb Road, Sabino Canyon Road to Sunrise Drive	West	10[b]	3	10	23.7
	East	20[d]	3[e]	8	

a. Driveway to apartment complex.
b. Two driveways to apartment complexes.
c. 25-30 of these residential driveways are U-drives with two access points.
d. 15 of these residential driveways have U-drives with two access points.
e. Includes one fire station.

Exhibit 4. Intersection Accident Statistics

Arterial	Cross Street	No. of Accidents	Rate[1]	SI[2]
Craycroft Road	River Road	27	0.63	1.55
	Territory Drive	2	0.13	1.50
	Sunrise Drive	50	1.38	1.51
Kolb Road	Sabino Canyon Road	26	0.89	1.38
	Snyder Road	11	0.72	1.62
	Territory Drive	5	0.37	2.36
	Sunrise Drive	18	0.70	1.49
Sunrise Drive	Swan Road	92	1.68	1.50
	Via Umbrosa	6	0.58	1.67
River Road	Swan Road	70	1.37	1.47

1. Rate – Accidents per million vehicles entering the intersection.
2. Severity Index (SI) – Calculated index that reflects the severity of accidents that occurred. Accident severity is classified as fatal, incapacitating injury, non-incapacitating injury, minor injury, or property damage only.

Exhibit 5. Segment Accident Statistics

(Jan. 1, 2000 – Dec. 31, 2002)

Arterial	Segment	Length (miles)	No. of Accidents	Rate[1]	SI[2]
Craycroft Road	River to Heatherwood	1.0	17	1.07	1.35
	Heatherwood to Sunrise	1.4	7	0.41	1.83
	Sunrise to .5 mi north	0.5	4	1.36	2.45
Kolb Road	Sabino Canyon to Snyder	1.0	16	1.19	2.04
	Snyder to Sunrise	1.0	14	1.12	1.63
Sunrise Drive	Craycroft to Kolb	1.9	17	0.39	1.98
	Kolb to Sabino Canyon	1.2	12	0.82	2.13
River Road	Craycroft to Tanuri	1.0	13	0.63	1.23
	Tanuri to Sabino Canyon	1.1	9	0.39	1.87

1. Rate – Accidents per million vehicles miles traveled on a given roadway segment.
2. Severity Index (SI) – Calculated index that reflects the severity of accidents that occurred. Accident severity is classified as fatal, incapacitating injury, non-incapacitating injury, minor injury, or property damage only.

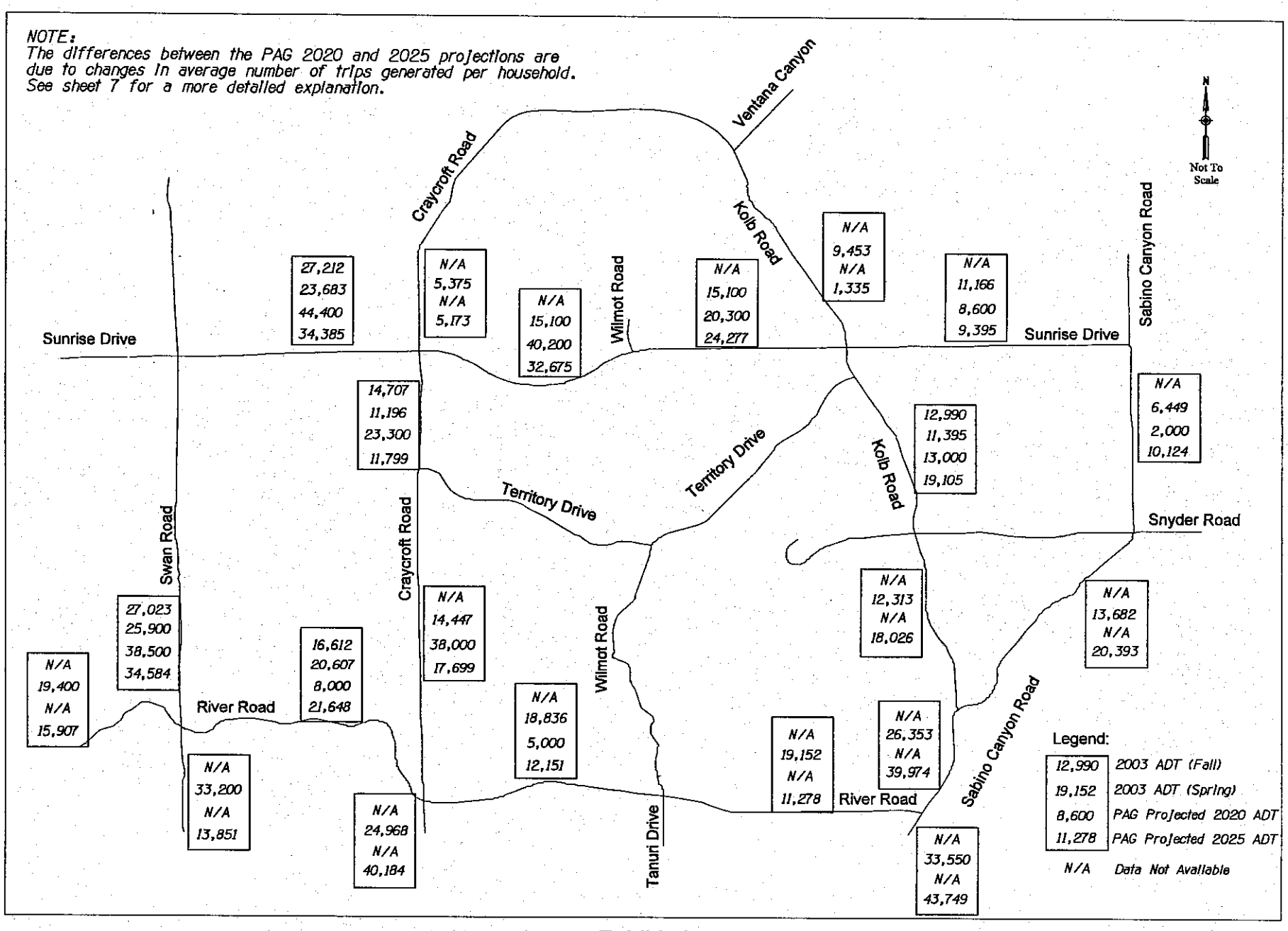

Exhibit 6
PAG Projected Average Daily Traffic Volumes

capacity can significantly affect output. Comparing the 2020 and 2025 PAG numbers, traffic projections on Sunrise Drive and Craycroft Road are significantly lower in 2025, and significantly higher on River Road and Kolb Road.

The marked differences between 2020 and 2025 traffic projections are primarily a result of differences in the two traffic projection models that were developed and used by PAG to generate these estimates. These differences include a reduction in the average number of vehicle types generated by a typical household per day and a reduction in the amount of commercial and residential development that is expected to occur in the north and northwest regions of the metropolitan area. The average number of trips generated per household is determined by the average number of residents. Based on the 2000 census data, the average number of residents per household was lower than assumed when the 2020 model was developed. Similarly, the amount of development that is now expected to occur in the northwest is significantly lower than previously expected. Due to impacts associated with the pygmy owl, planned development density has been reduced in Oro Valley and Marana. A summary of the projected traffic growth on those roadways is provided in Exhibit 7.

In addition to looking at individual roadway projections, it is often informative to look at total volumes across parallel roadways. Total north/south screen line volumes across Swan Road, Craycroft Road and Kolb Road and total east/west screen line volumes across Sunrise Drive and River Road at two locations are presented in Exhibit 8. Comparison of 1997 and 2003 screen line volumes indicates a decrease in north/south traffic and a modest increase (1 % per year) in east/west traffic volume. Although the decrease in north/south traffic may be a reflection of the construction on Sunrise Drive and Skyline Drive, it appears that past traffic growth in the northeast area has been relatively low when compared with other parts of the metropolitan area. Comparison of 2003 volumes and current 2025 projections suggests that traffic in the northeast area will grow approximately 1.5 % per year. Traffic projections used in the initial traffic reports indicated traffic growth in the range of 2.5 to 4 % annually.

Based on the traffic growth that has occurred since 1997 and the updated PAG traffic projections for 2025, a linear growth rate of 1.5% per year, or a total 20-year growth of 30% is considered appropriate for the arterials within the northeast area. This growth rate was applied to existing traffic volumes to produce 2025 forecasts that were used to estimate future roadway and intersection capacity requirements. The recommended 2025 traffic volumes are presented in Exhibit 9.

Turning Movement Volumes

Utilizing the recommended traffic volumes provided in Exhibit 9 and existing intersection turning movement volumes, future peak hour turning movement counts were estimated for the signalized intersections on Sunrise Drive, River Road, Craycroft Road, and Kolb Road. Turning movement counts were developed for the years 2005, 2010, 2015, 2020, and 2025 based on the assumption that 50% of the growth from 2003 to 2025 will occur in the first 7 years and the remaining 50% will occur in the last 15 years. The 2003 and 2025 intersection turning movement volumes are provided in Exhibits 10 through 12. The intermediate turning movement volumes are provided in Appendix A.

Exhibit 7. Summary of Projected Traffic Growth

Segment	Existing Count[1] (veh/day)	Projected 2025 ADT	% Growth	
			Total	Annual
River Rd, Swan to Craycroft	16,612	21,648	5.1%	0.2%
River Rd, Craycroft to Wilmot	18,836	12,151	-35.5%	-2.0%
River Rd, Wilmot to Sabino Canyon	19,152	11,278	-41.1%	-2.4%
Sunrise Dr, West Craycroft	27,212	34,385	45.2%	1.7%
Sunrise Dr, Craycroft to Wilmot	20,813 (97)	32,675	116.4%	3.5%
Sunrise Dr, Wilmot to Kolb	16,945 (98)	24,277	60.8%	2.2%
Sunrise Rd, Kolb to Sabino Canyon	11,166	9,395	-15.9%	-0.8%
Craycroft Rd, South of River	27,215 (97)	40,184	60.9%	2.2%
Craycroft Rd, River to Territory	17,956 (97)	17,699	22.5%	0.9%
Craycroft Rd, Territory to Sunrise	14,707	11,799	5.4%	0.2%
Craycroft Rd, North of Sunrise	5,803 (97)	5,173	-3.8%	-0.2%
Kolb Rd, Sabino Canyon to Snyder	12,313	18,026	46.4%	1.8%
Kolb Rd, Snyder to Sunrise	12,990	19,105	67.7%	2.4%
Kolb Rd, North of Sunrise	9,453	1,335	-85.9%	-8.5%
Sabino Canyon, South of River	33,550	43,749	30.4%	0.9%
Sabino Canyon, River to Kolb	26,353	39,974	51.7%	1.9%
Sabino Canyon, Kolb to Snyder	13,682	20,393	49.0%	1.8%
Sabino Canyon, Snyder to Sunrise	6,449	10,124	57.0%	2.1%
Swan Rd, South of River	27,435 (97)	13,851	-56.3%	-3.5%
Swan Rd, River to Sunrise	27,023	34,584	33.5%	1.2%

1. Existing traffic volume counts were taken during 2003 unless noted as taken in an earlier year. The earlier volumes were selected for use in the analysis to eliminate the impacts of construction on River Road and Sunrise Drive

Exhibit 8. Screen Line Volumes

	Swan/Craycroft/Kolb River to Sunrise	River/Sunrise Swan to Craycroft	River/Sunrise Craycroft to Kolb
1997	58,500	41,000	35,500
2003	54,000	44,000	36,000
2025	70,500	56,000	44,500
Total Projected Growth, (%)	30	27	23
Annual Projected Growth, (%)	1.5	1.4	1.2

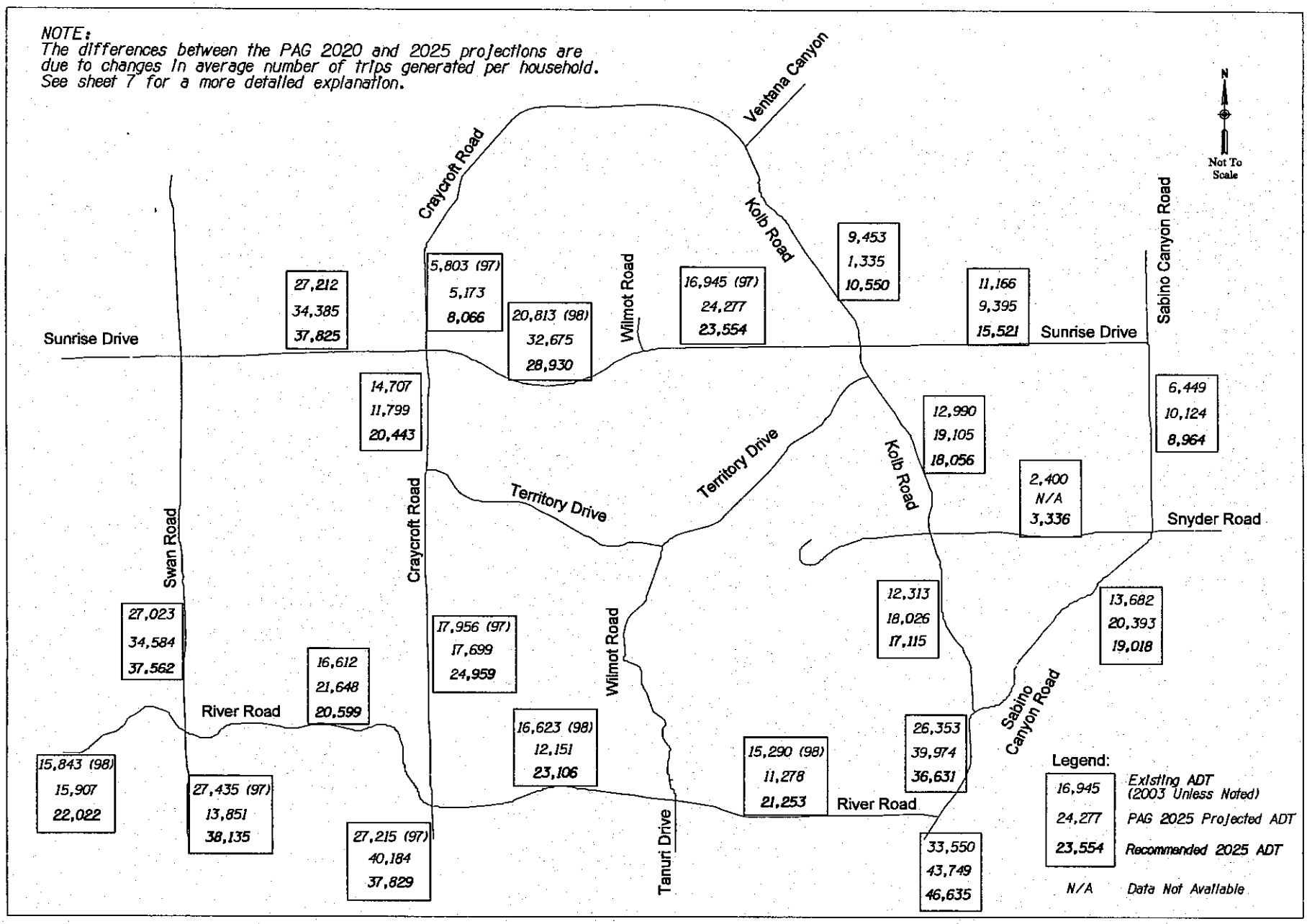

Exhibit 9
Recommended 2025 Traffic Volumes

Sunrise Drive At Craycroft Road

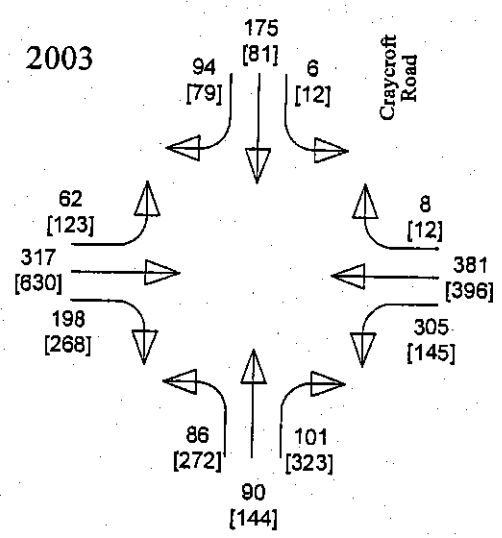

Sunrise Drive

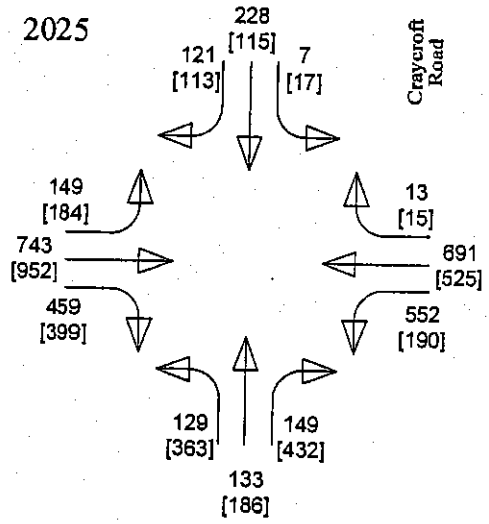

Sunrise Drive At Kolb Road

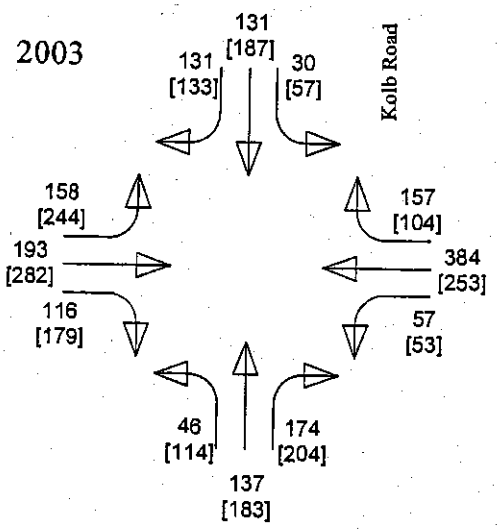

Sunrise Drive

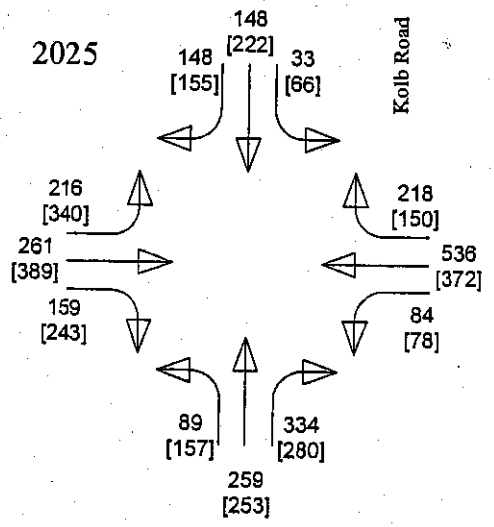

LEGEND:

3 AM - Peak Hourly Volumes (vph)
[5] PM - Peak Hourly Volumes (vph)

Exhibit 10
Intersection Turning Movement Volumes
Sunrise Drive At Craycroft Road
Sunrise Drive At Kolb Road

CEI Catalina Engineering, Inc.
g:\Projects\3015 NE Corr\Exhibits\TMC Sunrise.dgn
02/23/2004

Craycroft Road At Territory Drive/Calle Bosque

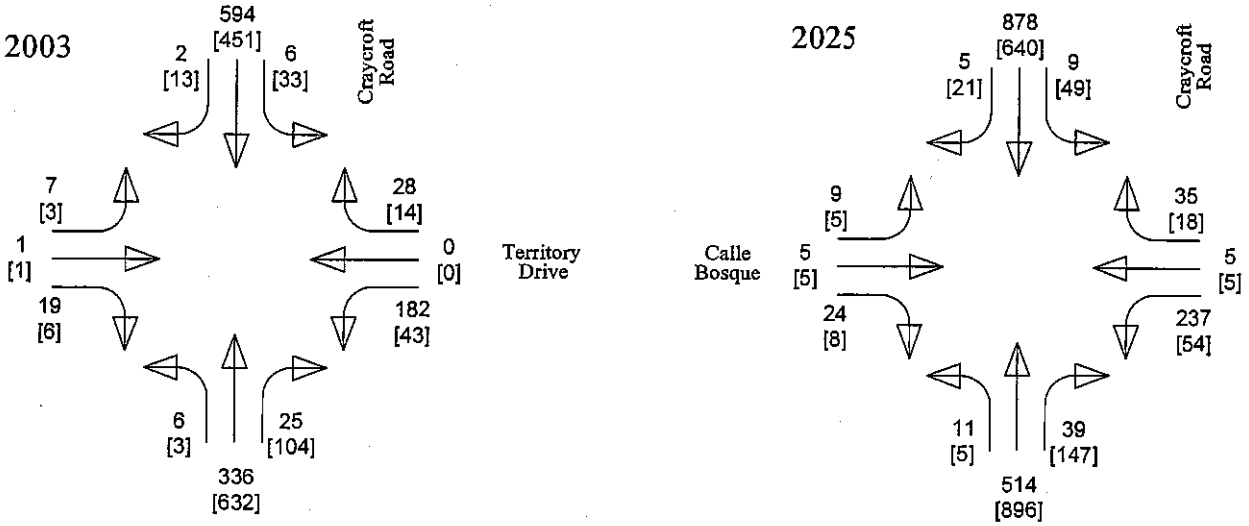

Craycroft Road At River Road

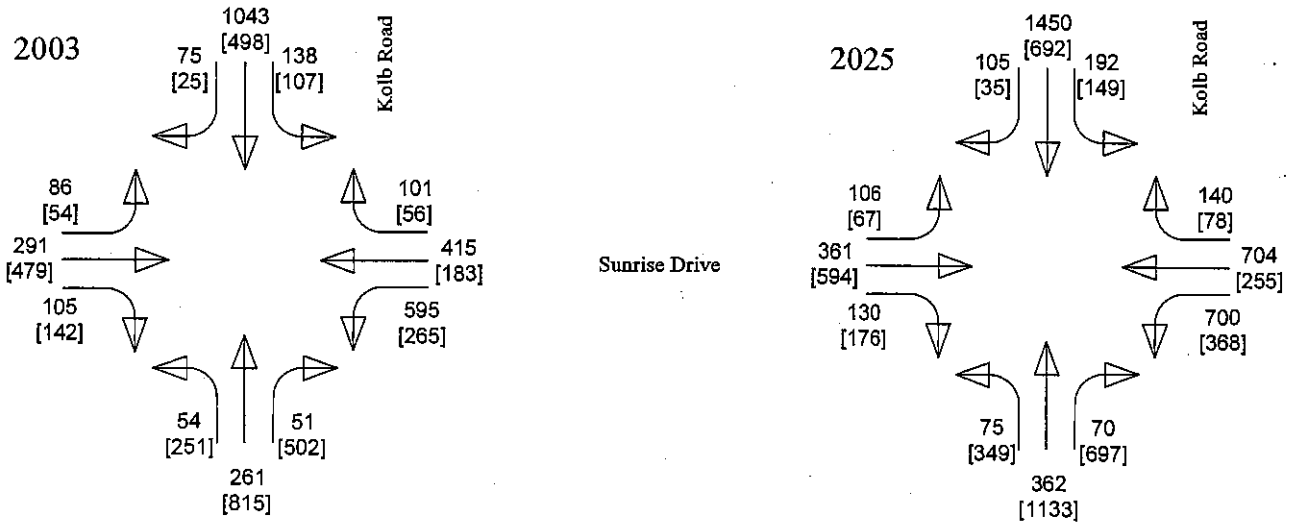

LEGEND:

3 AM - Peak Hourly Volumes (vph)
[5] PM - Peak Hourly Volumes (vph)

Exhibit 11
Intersection Turning Movement Volumes
Craycroft Road At River Road
Craycroft Road At Territory Drive/Calle Bosque

CEI Catalina Engineering, Inc.
g:\Projects\3015 NE Corr\Exhibits\TMC CRcycroft.dgn
02/23/2004

Kolb Road At Snyder Road

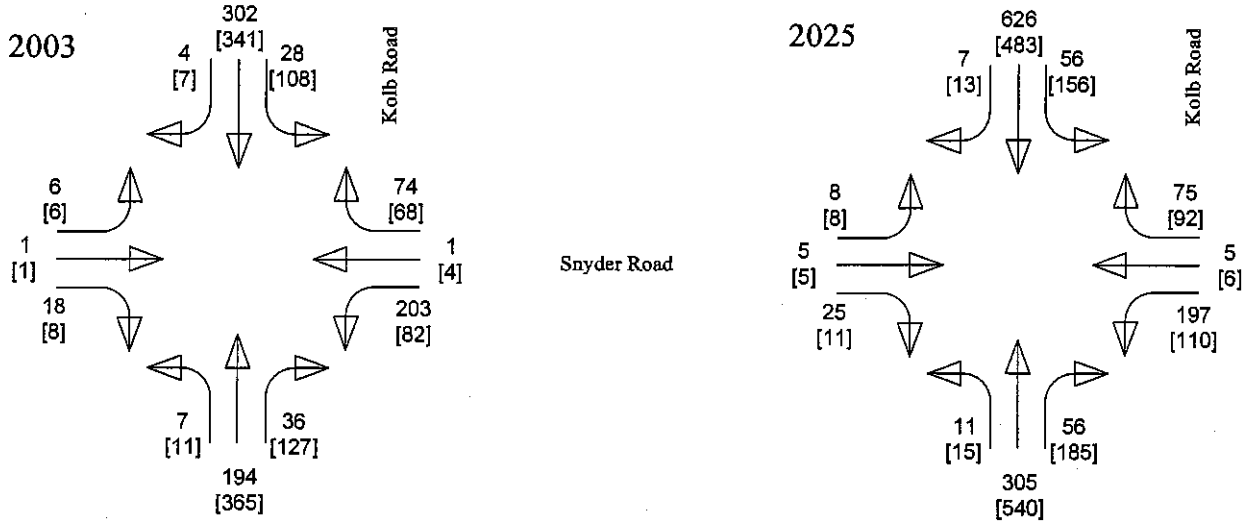

Kolb Road At Sabino Canyon Road

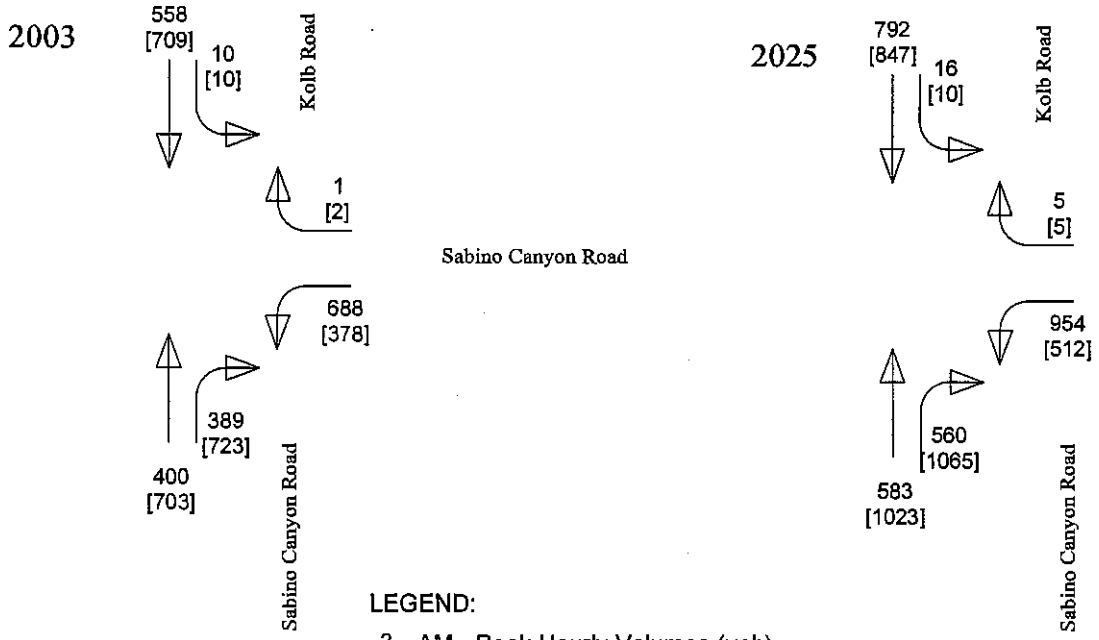

LEGEND:

3 AM - Peak Hourly Volumes (vph)
[5] PM - Peak Hourly Volumes (vph)

Exhibit 12
Intersection Turning Movement Volumes
Kolb Road At Snyder Road
Kolb Road At Sabino Canyon Road

CEI Catalina Engineering, Inc.
g:\Projects\3015 NE Corr\Exhibits\TMC Kolb.dgn
02/23/2004

4. CAPACITY ANALYSIS

Intersections

Future signalized intersection lane requirements were determined based on the results of capacity and level of service analyses of traffic conditions for each of the five horizon years. The Highway Capacity Analysis Package (HiCAP™ v2) was used to evaluate the signalized intersections capacity requirements. The following signal and traffic flow parameters were assumed for the signalized analyses:

- A peak-hour factor (PHF) of 0.92.
- Two percent heavy vehicles in the traffic stream.
- Cycle lengths of 90 or 120 seconds.
- Optimized signal timing to minimize total intersection delay.
- Right-Turn on Red (RTOR) volume of 20% for shared right-turn lanes, 35% for exclusive right-turn lanes. 10% RTOR are assumed when a right-turn overlap phase is used.
- Only protected left-turn movements are allowed with dual left turn lanes.
- Yellow and all red clearance of 6 seconds.
- An actuated signal with arrival Type 4, representing favorable progression.

The results of the intersection capacity analyses are summarized in Exhibits 13 through 18. Capacity analysis worksheets are provided in Appendix B. The capacity requirements for each of the analyzed intersections are summarized below.

- Sunrise Drive at Craycroft Road – In addition to two through lanes on the eastbound and westbound approaches, dual left-turn lanes will be required for the northbound and westbound movements. Exclusive right-turn lanes are needed on the northbound, southbound, and eastbound approaches.
- Sunrise Drive at Kolb Road – Exclusive through, left-turn, and right-turn lanes on each approach will be required.
- Craycroft Road at River Road – Even with two through lanes and exclusive right-turn lanes on each approach, and dual southbound and westbound left-turn lanes, the intersection will be congested when 2015 volumes are reached. During the morning peak period, westbound and southbound movements will be heavily congested.
- Craycroft Road at Territory Drive – Shared thru-right and exclusive left-turn lanes on each approach will provide sufficient capacity.

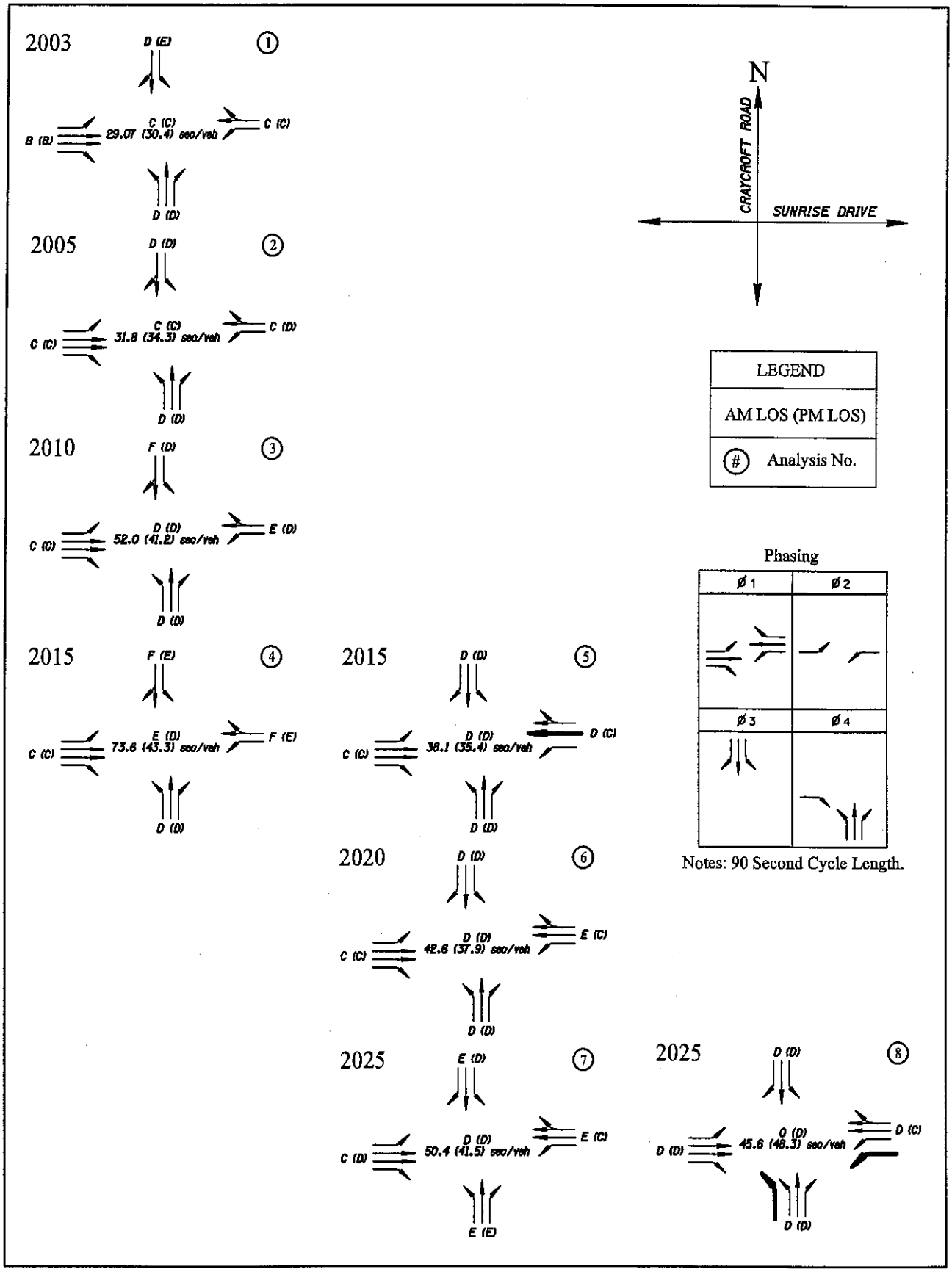

Exhibit 13
Intersection Capacity Analysis Results
Sunrise Drive at Craycroft Road

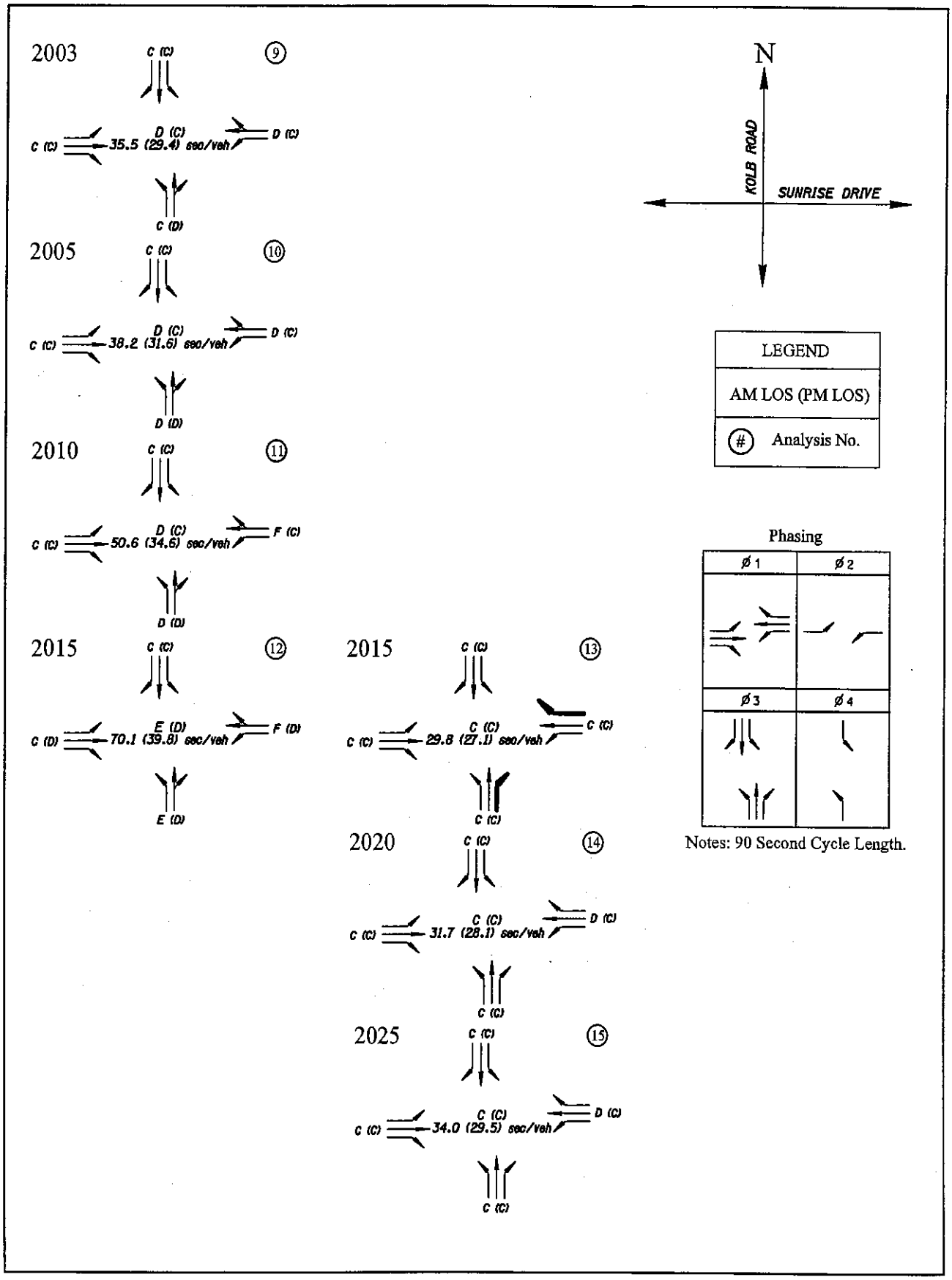

Exhibit 14
Intersection Capacity Analysis Results
Sunrise Drive at Kolb Road

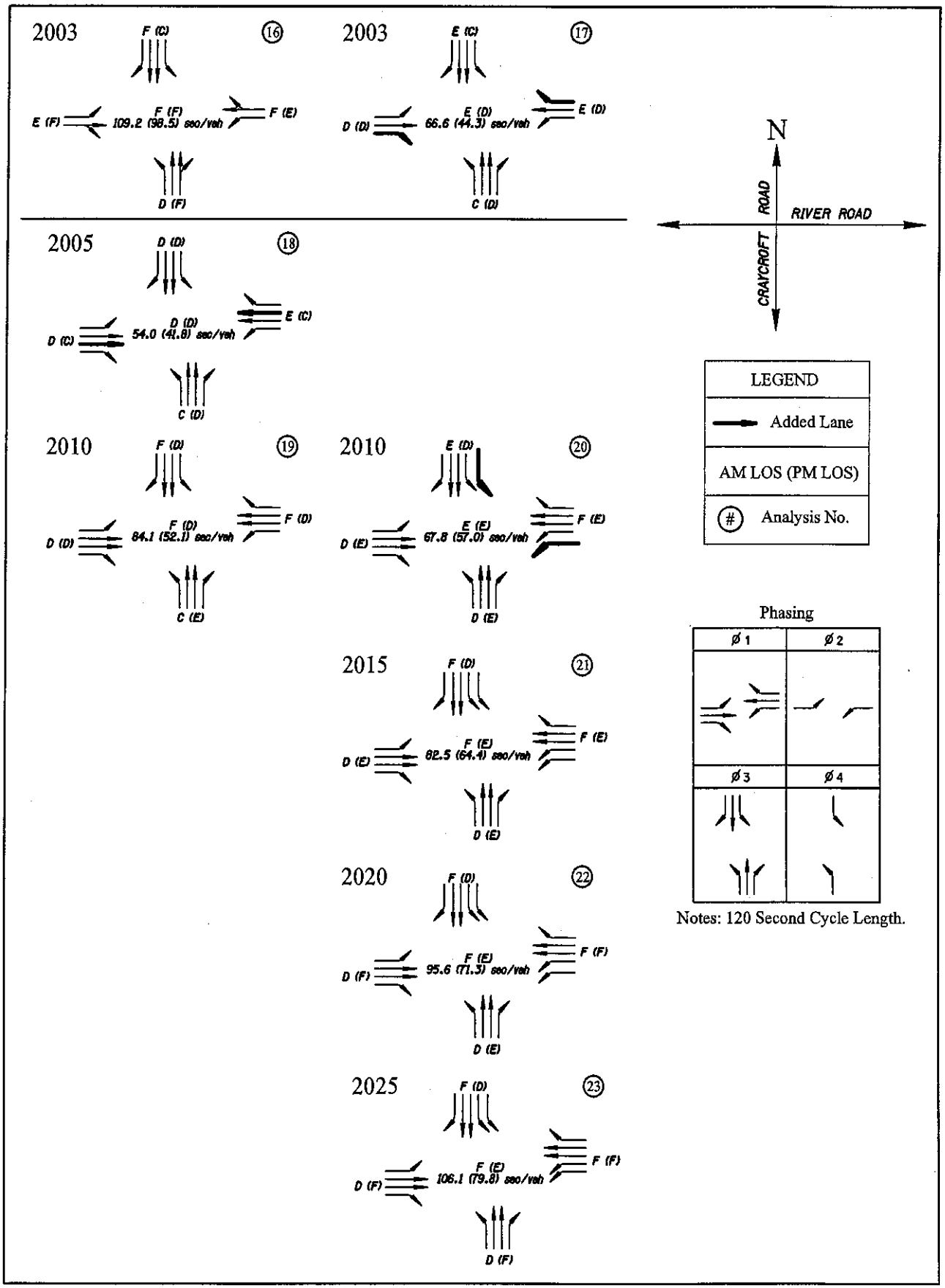

Exhibit 15
Intersection Capacity Analysis Results
Craycroft Road at River Road

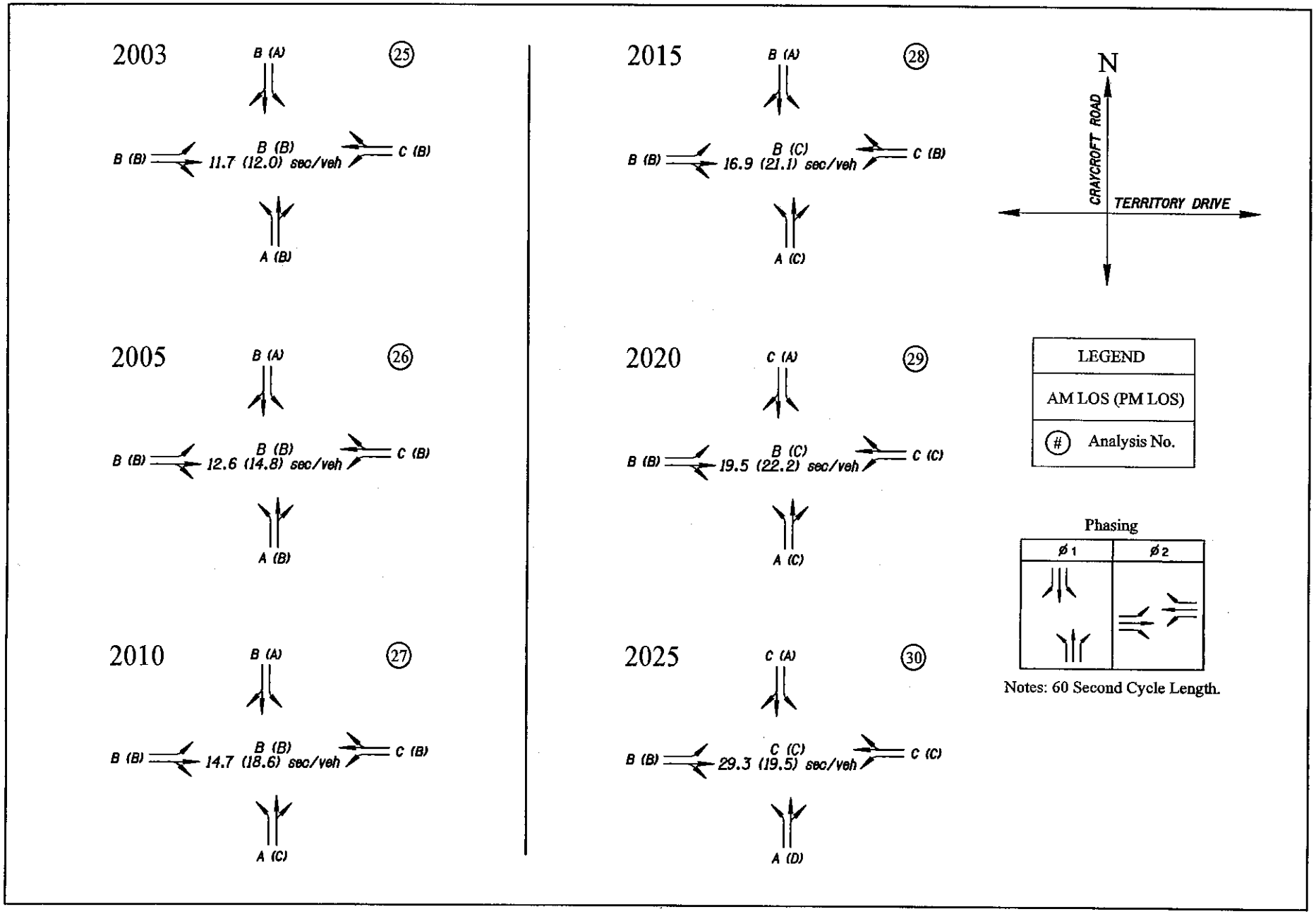

Exhibit 16
Intersection Capacity Analysis Results
Craycroft Road at Territory Drive

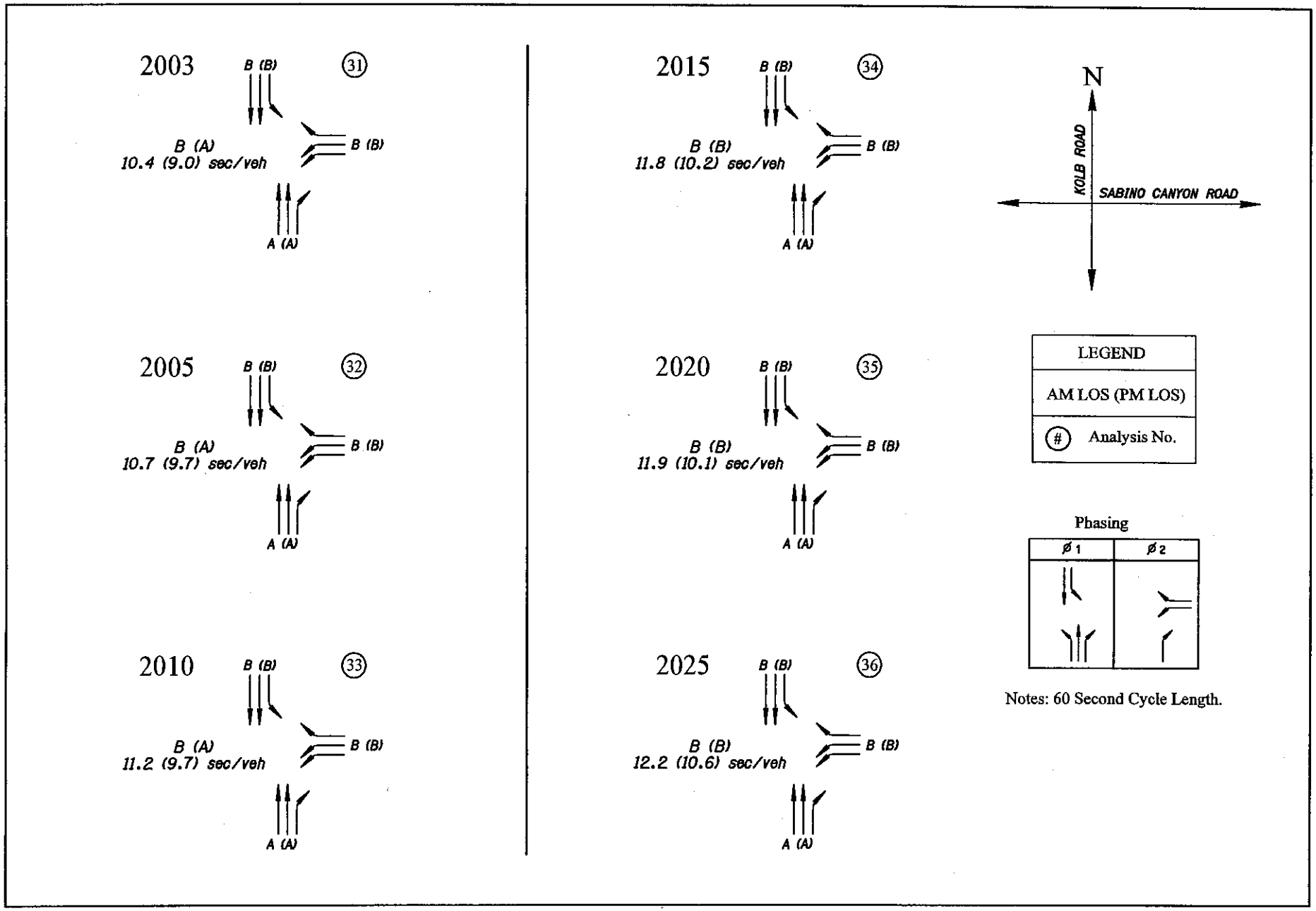

Exhibit 17
Intersection Capacity Analysis Results
Kolb Road at Sabino Canyon Road

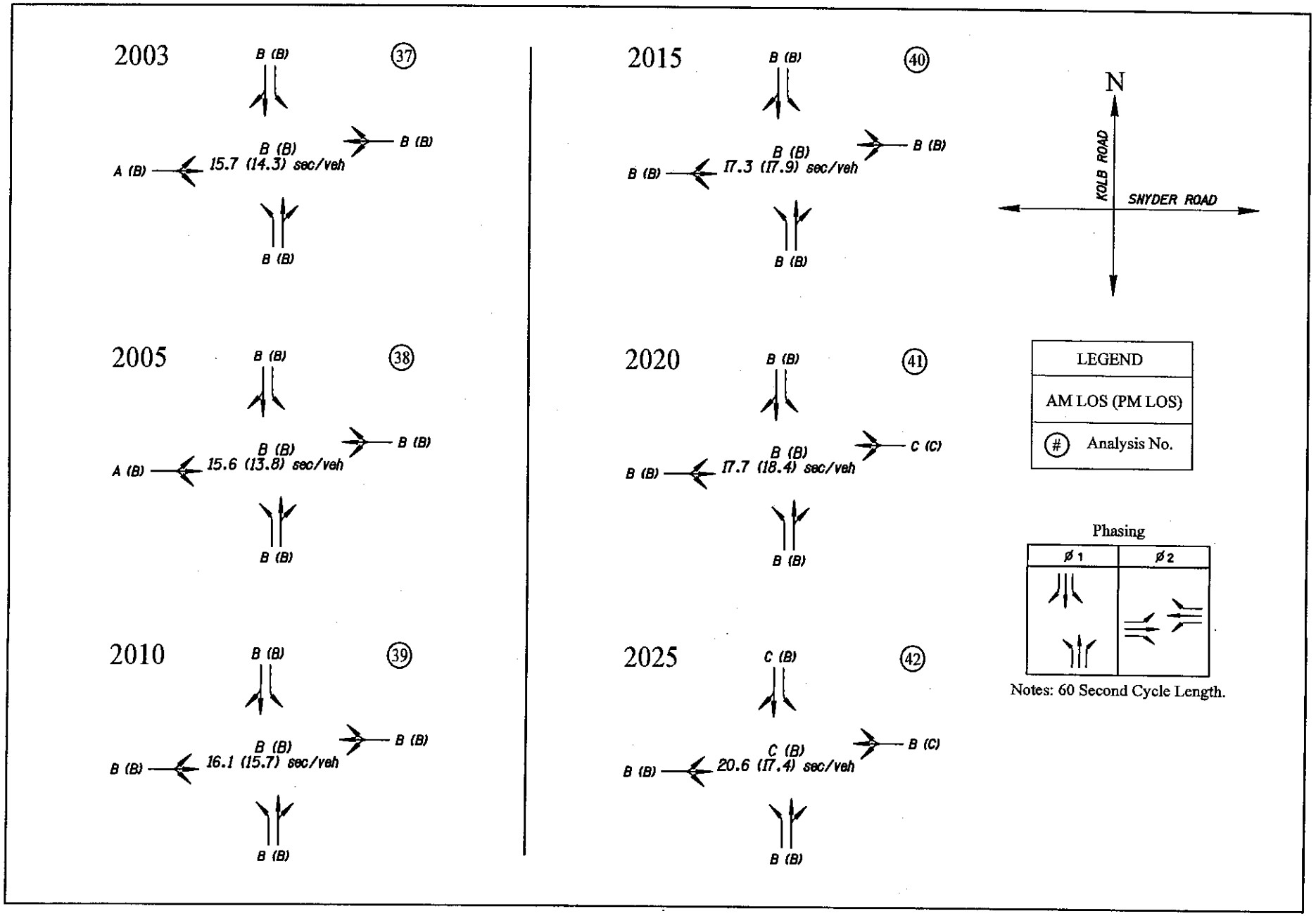

Exhibit 18
Intersection Capacity Analysis Results
Kolb Road at Snyder Road

- Kolb Road at Sabino Canyon Road – The existing lane configuration provides sufficient capacity through 2025.
- Kolb Road at Snyder Road – The existing lane configuration provides sufficient capacity through 2025.

Roadway Segments

The operational efficiency of an arterial is typically assessed by the average speed that through vehicles are traveling. Delay caused by signalized intersections, turning vehicles at side streets and driveways, slow moving vehicles, including bicycles, buses stopped to load and unload passengers, and other geometric factors influence travel speed. The desired travel speed on an arterial depends upon the function of the roadway, level of development along the roadway, and user expectancy. For example, the average speed that is acceptable to users traveling along an urban arterial such as Broadway Boulevard or Craycroft Road within the City of Tucson is lower than the average speed that is expected on Sunrise Drive.

Average travel speeds and level of service along each of the northeast arterials were estimated for four scenarios – existing conditions, no-build conditions with 2025 traffic forecasts, and 3-lane and 4-lane cross sections with 2025 traffic forecasts. The methodology used to perform the analysis has recently been developed by the Transportation Research Board and has been recommended for inclusion in the Highway Capacity Manual. This new method is a combination of the current methods in the 2000 HCM for analysis of two-lane highways and urban arterials. The new method is intended to provide an analytical tool to evaluate traffic flow on two and three-lane roadways that serve developed areas and have signalized intersections spaced at one mile or more. The northeast area arterials fit well into this roadway classification.

The new method calculates the average travel speed for a specific direction of travel based on the free-flow speed of the roadway and accounting for the effect of the volume of traffic in both directions of travel and the availability of passing zones. The delay caused by the signalized intersection at the end of each roadway segment evaluated is added and a total average travel speed is calculated. It is important to note that this method does not account for delays caused by right-turning vehicles or vehicles entering the roadway from a side street or driveway. The recommended level of service thresholds are based on the free-flow speed of the roadway.

The arterial segment analysis was based on the following criteria.

- A continuous left-turn lane or left-turn bays will be provided at all side streets and driveways so that left-turning vehicles do not block through traffic.
- The capacity requirements determined for the signalized intersections in 2025 will be provided.

- Passing is prohibited.
- The current directional split of traffic on each arterial will remain in 2025.
- The free-flow speed on each arterial is 50 mph.

The following 3-lane suburban arterial speed thresholds, which represent a higher expected average travel speed than on an urban arterial, were used to estimate level of service.

Exhibit 19. Level of Service Criteria

Level of Service	Minimum Average Travel Speed, mph	
	3-Lane Suburban Arterial[1]	Urban Arterial[2]
A	45	45
B	38	35
C	28	25
D	23	20
E	18	15
F	<18	<15

1. Developed by Catalina Engineering based on engineering judgment.
2. Recommended in the 2000 Highway Capacity Manual.

The roadway segment analysis results are presented in Exhibit 20. The results show the poor travel speeds and level of service that will occur as traffic volumes increase to projected 2025 levels and no capacity is added to each arterial. Widening each arterial to 3-lanes with added capacity at the signalized intersections will provide an acceptable level of service during both peak and off-peak periods. The 4-lane widening alternative will result in higher average travel speeds than the 3-lane alternative, although both provide acceptable levels of service.

Alternatives

Based on the projected 2025 traffic volumes on the northwest arterials, the intersection and roadway segment analysis results, and the level of access along each roadway, several improvement alternatives can be considered.

Sunrise Drive, Craycroft Road to Kolb Road

On Sunrise Drive, a 4-lane divided roadway would provide more than enough through capacity and will allow for ease of access. However, a 2-lane roadway with left-turn bays at each side street/driveway or a continuous center turn lane, added capacity at the Craycroft Road

Exhibit 20. Estimated Average Travel Speed and Level of Service

Roadway Segment		Existing Conditions				2025 No Build			
		Peak		Off Peak		Peak		Off Peak	
		Avg. Speed (mph)	LOS	Avg. Speed (mph)	LOS	Avg. Speed (mph)	LOS	Avg. Speed (mph)	LOS
Sunrise Drive, Craycroft Road to Kolb Road	EB	30	C	42	B	27	D	33	C
	WB	30	C	43	B	17	F	25	D
River Road, Craycroft Road to Kolb Road	EB	27	D	41	B	20	E	29	C
	WB	17	F	25	D	15	F	21	E
Craycroft Road, River Road to Territory Drive	NB	20	E	28	C	17	F	24	D
	SB	13	F	18	E	12	F	17	F
Craycroft Road, Territory Drive to Sunrise Drive	NB	17	F	24	D	16	F	22	E
	SB	21	E	29	C	16	F	23	D
Kolb Road, Sabino Canyon Road to Snyder Road	NB	28	C	39	B	27	D	37	C
	SB	30	C	42	B	24	D	33	C
Kolb Road, Snyder Road to Sunrise Drive	NB	16	F	24	D	15	F	22	E
	SB	20	E	29	C	17	F	26	D

Roadway Segment		2025 3-Lane w/ Intx Buildout				2025 4-Lane			
		Peak		Off Peak		Peak		Off Peak	
		Avg. Speed (mph)	LOS	Avg. Speed (mph)	LOS	Avg. Speed (mph)	LOS	Avg. Speed (mph)	LOS
Sunrise Drive, Craycroft Road to Kolb Road	EB	31	C	35	C	41	B	43	B
	WB	28	C	33	C	41	B	43	B
River Road, Craycroft Road to Kolb Road	EB	29	C	35	C	41	B	43	A
	WB	20	E	30	C	26	D	31	C
Craycroft Road, River Road to Territory Drive	NB	29	C	33	C	37	C	40	B
	SB	20	E	29	C	27	D	32	C
Craycroft Road, Territory Drive to Sunrise Drive	NB	23	D	27	D	28	C	32	C
	SB	25	D	29	C	30	C	34	C
Kolb Road, Sabino Canyon Road to Snyder Road	NB	32	C	37	C	40	B	43	B
	SB	31	C	36	C	42	B	45	A
Kolb Road, Snyder Road to Sunrise Drive	NB	30	C	35	C	36	C	40	B
	SB	31	C	36	C	37	C	41	B

and Kolb Road intersections, and paved shoulders for use by bicycles would also provide acceptable level of service and safety. Provision of right-turn bays at major side streets, including Paseo Sonoyta/Via Zarzosa, Wilmot Road, Paseo Otono, and along the commercial developments west of Kolb Road, would improve roadway operations and safety. Installation of a raised median between Paseo Otono and Kolb Road would provide access control and improved safety within the commercial developments. At Craycroft Road, two eastbound through lanes should be carried through the intersection a significant distance to allow for smoother merging into one lane than normally would occur with a short lane drop situation. Providing a 4-lane divided section from Craycroft Road to Paseo Sonoyta/Via Zarzosa would be optimal.

River Road, Craycroft Road to Sabino Canyon Road

On River Road, a 3-lane section is needed to provide an acceptable level of service and safety. Considering the high density of access points along this roadway section, the provision of a continuous center turn lane would ensure safe access and optimal roadway capacity. Significant added capacity is needed on River Road at the Craycroft Road intersection, including two eastbound and westbound through lanes and dual westbound left-turn lanes. Providing a 4-lane divided section extending east of Craycroft Road for the length of the commercial development would improve intersection operations. Right-turn bays should be provided at Tanuri Drive and this intersection may need to be signalized in the future. The existing River Road/Sabino Canyon Road intersection does not require additional capacity to handle 2025 traffic volumes.

Should this section of River Road remain 2-lanes, some trips may divert to Sunrise Drive and Craycroft Road, although the volume would probably not be significant. Much of the traffic on River Road is generated by residential developments along Kolb Road and Sabino Canyon Road and the travel patterns are south to east in nature.

Craycroft Road, River Road to Sunrise Drive

On this section of Craycroft Road, a 3-lane section will provide an acceptable level of service and enhanced access safety through 2025, however, the intersection at River Road will be congested. The intersection capacity improvements previously described will be sufficient for volumes at the 2015 level. Widening Craycroft Road to 4-lanes will not improve the operations at the River Road intersection, since two through lanes in each direction will be provided with either the 3 or 4-lane alternative. If a 3-lane section is provided, right-turn bays should be considered at Rio Verde Vista Drive, Camino del Celador (northbound and southbound), Paseo Aquimuri, and Center Village Drive in order to increase roadway capacity. Considering the

expected congestion at the River Road intersection, provision of a 4-lane divided section from River Road to Camino del Celador should also be considered with the 3-lane alternative. This improvement will smooth northbound merging, provide increase storage for southbound traffic, and provide access control for the shopping center on the northeast corner. Other measures that will optimize the capacity and operation of a 3-lane section include:

- Do not install an eastbound free-flow right turn lane on Sunrise Drive at Craycroft Road, as was previously recommended. Provision of a conventional right-turn lane will allow for greater control so that gaps can be provided within the Craycroft Road traffic stream during peak periods. This will improve side street and driveway access along Craycroft Road.
- Maintain the existing frontage roads along Craycroft Road in order to minimize the number of access points.
- At the Territory Drive/Calle Bosque intersection, exclusive northbound and southbound right-turn lanes should be provided.
- Widen side streets as necessary to provide a right-turn flare or lane in order to reduce delay to vehicles entering Craycroft Road.

Kolb Road, Sabino Canyon Road to Sunrise Drive

Considering the projected 2025 volumes and the access point density along this section of Kolb Road, a 3-lane section is well suited and will provide a good level of service and safe access. Provision of a raised median from Territory Drive to Sunrise Drive would improve access control in this commercial area. Right-turn lanes should be considered at Territory Drive, and at Snyder Road.

5. ALTERNATIVE COST ESTIMATES

Preliminary project costs for alternative improvements for Craycroft Road, Kolb Road, Sunrise Drive, and River Road are provided in Exhibit 21. Cost calculation sheets are provided in Appendix C. Except for Craycroft Road, for which EEC performed a more rigorous alternatives assessment, the cost estimates for the Kolb Road and Sunrise Drive alternatives are consistent with a design concept level estimate. More detailed design assessment of each alternative should be performed in order to refine the expected costs. The estimated costs for widening River Road to three lanes is based on costs for similar improvements to the other arterials and includes the cost for a new bridge at the Ventana Canyon Wash. The River Road costs should be considered as planning level. A design concept report should be performed in order to more accurately assess construction and right-of-way costs. Note that the overall costs

Exhibit 21. Estimated Preliminary Project Costs

Roadway	Alternative	Construction	Contingency[1]	Sub Total Construction	Right-of-Way [2]	Const. Admin./ Engineering[3]	Other[4]	Total Cost
Craycroft Road;	Original 4-Lane Option	10,956,000	3,287,000	14,243,000	1,030,000	2,421,000	3,064,000	$20,758,000
River Road to Sunrise Drive	3-Lane Overlay	6,006,000	1,802,000	7,808,000	800,000	1,329,000	2,744,000	$12,681,000
	4-Lane Modified New	8,899,000	2,670,000	11,569,000	1,030,000	1,968,000	3,064,000	$17,631,000
	4-Lane Modified Overlay	8,297,000	2,490,000	10,787,000	1,030,000	1,835,000	3,064,000	$16,716,000
Kolb Road;	Original 4-Lane Option	13,358,000	4,007,000	17,365,000	4,000,000	2,612,000	2,672,000	$26,649,000
Sabino Canyon Road to	3-Lane New	8,034,000	2,428,000	10,462,000	250,000	1,779,000	2,672,000	$15,163,000
Sunrise Drive	3-Lane Widening/Overlay	4,262,000	1,279,000	5,541,000	500,000	942,000	2,672,000	$9,655,000
Sunrise Drive;	Original 4-Lane Option	15,075,000	4,522,000	19,597,000	500,000	3,331,000	3,015,000	$26,443,000
Craycroft Road to	4-Lane Modified New	12,207,000	3,662,000	15,868,000	500,000	2,698,000	3,015,000	$22,081,000
Kolb Road	4-Lane/3-Lane Modified New	10,546,000	3,164,000	13,710,000	400,000	2,331,000	3,015,000	$19,456,000
	3-Lane New	8,108,000	2,342,000	10,540,000	300,000	1,792,000	3,015,000	$15,647,000
River Road;	3-Lane New	7,500,000	2,250,000	9,750,000	1,000,000	1,676,000	1,950,000	$14,376,000
Craycroft Road to								
Sabino Canyon Road								

1. 30% of construction cost.
2. Estimated right-of-way costs for Craycroft Road alternatives were provided by Pima County Real Property. Right-of-way costs for Kolb Road, Sunrise Drive, and River Road alternatives are very preliminary.
3. 17% of constuction cost.
4. Other costs include project administration, planning and design, and public art. 20% of construction cost.

may be lower since there is some overlapping of improvements at the Craycroft Road/Sunrise Drive, Kolb Road/Sunrise Drive, and Craycroft Road/River Road intersections.

A description of each alternative and the assumptions made for determination of project costs is provided below.

Craycroft Road, River Road to Sunrise Drive

- Cost estimates for each alternative, including the original 4-lane divided concept, were provided by EEC. The 30% contingency, 17% construction engineering/planning, and 20% other costs were applied to the alternatives for the other three roadways. The 4-lane modified alternatives reflect a design that includes an at-grade median, sidewalk or walking path along one side of the roadway, no outside curb, and no storm drain system.

Kolb Road, Sabino Canyon Road to Sunrise Drive

- Cost estimates for each alternative were provided by MMLA. Costs for the 3-lane alternatives were modified to eliminate outside curb and storm drain systems and to provide sidewalk along one side of the roadway only.
- Right-of-way requirements and costs for the 3-lane alternatives are preliminary.
- The 3-lane alternatives assume relatively little change in the roadway alignment and design speed.

Sunrise Drive, Craycroft Road to Kolb Road

- The cost estimate for the original 4-lane divided option is based on the 30% design estimate prepared in 2002, and adjusted to reflect current unit costs.
- The 4-lane modified alternative includes an at-grade median, no outside curb, and no storm drain. A raised median is provided at the Craycroft Road and Kolb Road intersections.
- The 4-lane/3-lane modified alternative includes a 4-lane section, without curb or storm drain, from Craycroft Road to Wilmot Road, and a 3-lane section from Wilmot Road to Kolb Road. Raised medians are provided at Craycroft Road and Kolb Road.
- The 3-lane alternative includes 4-lane sections with divided medians at the Craycroft Road and Kolb Road intersections, no storm drain, and no curbs.
- Earthwork and slope stabilization quantities for each alternative were estimated by running an appropriate roadway design using the current 3-D surface model. Each roadway design assumed that the roadway alignment will be modified to provide a 50 mph design speed.
- All new pavement was assumed for each alternative. Overlay of the existing pavement can be considered depending upon its suitability.

- Except for the original 4-lane alternative, sidewalk is included on only one side of the roadway.
- Right-of way costs are preliminary and will depend upon the slope stabilization design that is selected.

River Road, Craycroft Road to Sabino Canyon Road

- The 3-lane alternative includes all new pavement, assumes that widening will occur predominantly to the north of the existing pavement, and that the Ventana Canyon Wash bridge will only be widened to include three lanes with bike lanes and sidewalk on one side.
- Improvements to the Craycroft Road/River Road are not included in the estimate, as it is assumed that they will be included with the Craycroft Road improvement project. Improvements to the River Road/Sabino Canyon Road intersection will not be required.
- Right-of-way requirements and costs are very preliminary.

6. CONCLUSIONS

Based on the findings and observations made in this report and on information contained in the initial traffic reports prepared for Craycroft Road, Sunrise Drive, and Kolb Road, the following conclusions are made:

1. The updated 2025 traffic growth projections in the northeast area, which reflect a 1.5% annual growth rate, are appropriate considering the amount of future development that is possible within the northwest area and the current and future growth patterns within the region.
2. During peak traffic periods, a large majority of trips on the northwest area arterials, particularly on Craycroft Road and River Road, are non-local through trips.
3. Current 3-year accident statistics do not indicate any problematic accident trends at any location on the northwest arterials.
4. The density of access points per mile on Sunrise Drive and Craycroft Road is low. River Road and Kolb Road have a much greater density of access points due to the individual residences along each roadway. Access activity along each roadway is low to moderate, except at the commercial nodes located at the Craycroft Road/River Road and Kolb Road/Sunrise Drive intersections.
5. Future traffic volumes will require full reconstruction of the Craycroft Road/River Road and Craycroft Road/Sunrise Drive intersections to provide needed through and turn lane capacity. Full build-out of the Craycroft Road/River Road intersection will likely provide sufficient capacity to serve only 2015 traffic volumes. Beyond 2015 volumes, the intersection will experience some congestion during morning and evening peak traffic periods, which is considered reasonable within a suburban area.
6. Based on projected 2025 traffic projections and considering the low to moderate level of access activity along each roadway, a 3-lane section will provide acceptable levels of service and safety along each roadway. Provision of right-turn bays at some residential

side streets and commercial driveways, and added capacity and access control at commercial nodes will enhance traffic operations and safety.

7. Although improvements to the section of River Road from Craycroft Road to Sabino Canyon Road are not included in the Regional Transportation Plan, implementation of a 3-lane section will be needed to provide necessary roadway capacity and safety.

APPENDIX A. TURNING MOVEMENT VOLUMES

Intermediate Year Turning Movement Count Calculations

Intersection: Sunrise Drive At Kolb Road

Date Exist Data Taken: 2/28/2002

AM Peak	Eastbound			Westbound			Northbound			Southbound			% Vol Inc
Year	LT	THRU	RT	LT	THRU	RT	LT	THRU	RT	LT	THRU	RT	Breakup
2003	**158**	**193**	**116**	**57**	**384**	**157**	**46**	**137**	**174**	**30**	**131**	**131**	
2005	170	207	125	62	414	169	55	161	206	31	134	134	0.2
2010	187	227	138	71	460	188	68	198	254	32	140	140	0.3
2015	199	241	146	76	490	200	76	222	286	32	143	143	0.2
2020	207	251	153	80	513	209	83	241	310	33	145	145	0.15
2025	**216**	**261**	**159**	**84**	**536**	**218**	**89**	**259**	**334**	**33**	**148**	**148**	0.15
22 yr Vol Inc.	58	68	43	27	152	61	43	122	160	3	17	17	Vol Inc
22 yr % Inc.	37%	35%	37%	47%	40%	39%	93%	89%	92%	10%	13%	13%	

PM Peak	Eastbound			Westbound			Northbound			Southbound			% Vol Inc
Year	LT	THRU	RT	LT	THRU	RT	LT	THRU	RT	LT	THRU	RT	Breakup
2003	**244**	**282**	**179**	**53**	**253**	**104**	**114**	**183**	**204**	**57**	**187**	**133**	
2005	263	303	192	58	277	113	123	197	219	59	194	137	0.2
2010	292	336	211	66	313	127	136	218	242	62	205	144	0.3
2015	311	357	224	71	336	136	144	232	257	63	212	148	0.2
2020	326	373	233	74	354	143	151	243	269	65	217	152	0.15
2025	**340**	**389**	**243**	**78**	**372**	**150**	**157**	**253**	**280**	**66**	**222**	**155**	0.15
22 yr Vol Inc.	96	107	64	25	119	46	43	70	76	9	35	22	Vol Inc
22 yr % Inc.	39%	38%	36%	47%	47%	44%	38%	38%	37%	16%	19%	17%	

Intersection: Kolb Road At Snyder Road

Date Exist Data Taken: 1/15/2002

AM Peak	Eastbound			Westbound			Northbound			Southbound			% Vol Inc
Year	LT	THRU	RT	LT	THRU	RT	LT	THRU	RT	LT	THRU	RT	Breakup
2003	**6**	**1**	**18**	**203**	**1**	**74**	**7**	**194**	**36**	**28**	**302**	**4**	
2005	6	2	19	202	2	74	8	216	40	34	367	5	0.2
2010	7	3	22	200	3	75	9	250	46	42	464	6	0.3
2015	7	4	23	199	4	75	10	272	50	48	529	6	0.2
2020	8	4	24	198	4	75	10	288	53	52	577	7	0.15
2025	**8**	**5**	**25**	**197**	**5**	**75**	**11**	**305**	**56**	**56**	**626**	**7**	0.15
22 yr Vol Inc.	2	4	7	-6	4	1	4	111	20	28	324	3	Vol Inc
22 yr % Inc.	33%	400%	39%	-3%	400%	1%	57%	57%	56%	100%	107%	75%	

PM Peak	Eastbound			Westbound			Northbound			Southbound			% Vol Inc
Year	LT	THRU	RT	LT	THRU	RT	LT	THRU	RT	LT	THRU	RT	Breakup
2003	**6**	**1**	**8**	**82**	**4**	**68**	**11**	**365**	**127**	**108**	**341**	**7**	
2005	6	2	9	88	4	73	12	400	139	118	369	8	0.2
2010	7	3	10	96	5	80	13	453	156	132	412	10	0.3
2015	7	4	10	102	5	85	14	488	168	142	440	11	0.2
2020	8	4	11	106	6	88	14	514	176	149	462	12	0.15
2025	**8**	**5**	**11**	**110**	**6**	**92**	**15**	**540**	**185**	**156**	**483**	**13**	0.15
22 yr Vol Inc.	2	4	3	28	2	24	4	175	58	48	142	6	Vol Inc
22 yr % Inc.	33%	400%	38%	34%	50%	35%	36%	48%	46%	44%	42%	86%	

Intermediate Year Turning Movement Count Calculations

Intersection: Sabino Canyon Road At Snyder Road

Date Exist Data Taken: 4/9/1997

AM Peak	Eastbound			Westbound			Northbound			Southbound			% Vol Inc
Year	LT	THRU	RT	LT	THRU	RT	LT	THRU	RT	LT	THRU	RT	Breakup
2003	**245**	**1**	**119**	**0**	**1**	**1**	**148**	**197**	**0**	**1**	**168**	**191**	
2005	263	2	128	1	2	2	163	217	1	2	180	204	0.2
2010	291	3	143	3	3	3	187	248	3	3	198	224	0.3
2015	309	4	152	4	4	4	202	268	4	4	210	237	0.2
2020	323	4	159	4	4	4	213	283	4	4	219	247	0.15
2025	**337**	**5**	**166**	**5**	**5**	**5**	**225**	**298**	**5**	**5**	**228**	**257**	0.15
22 yr Vol Inc.	92	4	47	5	4	4	77	101	5	4	60	66	Vol Inc
22 yr % Inc.	38%	400%	39%	#DIV/0!	400%	400%	52%	51%	#DIV/0!	400%	36%	35%	

PM Peak	Eastbound			Westbound			Northbound			Southbound			% Vol Inc
Year	LT	THRU	RT	LT	THRU	RT	LT	THRU	RT	LT	THRU	RT	Breakup
2003	**120**	**2**	**119**	**1**	**1**	**2**	**147**	**126**	**1**	**1**	**125**	**152**	
2005	131	3	129	2	2	3	161	138	2	2	134	163	0.2
2010	147	4	144	3	3	4	183	156	3	3	148	181	0.3
2015	157	4	154	4	4	4	197	167	4	4	157	192	0.2
2020	165	5	162	4	4	5	207	176	4	4	164	200	0.15
2025	**173**	**5**	**169**	**5**	**5**	**5**	**218**	**185**	**5**	**5**	**171**	**209**	0.15
22 yr Vol Inc.	53	3	50	4	4	3	71	59	4	4	46	57	Vol Inc
22 yr % Inc.	44%	150%	42%	400%	400%	150%	48%	47%	400%	400%	37%	38%	

Intersection: Sabino Canyon Road At Kolb Road

Date Exist Data Taken: 6/12/2003

AM Peak	Eastbound			Westbound			Northbound			Southbound			% Vol Inc
Year	LT	THRU	RT	LT	THRU	RT	LT	THRU	RT	LT	THRU	RT	Breakup
2003	**0**	**0**	**0**	**688**	**0**	**1**	**0**	**400**	**389**	**10**	**558**	**0**	
2005	0	0	0	741	0	2	0	437	423	11	605	0	0.2
2010	0	0	0	821	0	3	0	492	475	13	675	0	0.3
2015	0	0	0	874	0	4	0	528	509	14	722	0	0.2
2020	0	0	0	914	0	4	0	556	534	15	757	0	0.15
2025	**0**	**0**	**0**	**954**	**0**	**5**	**0**	**583**	**560**	**16**	**792**	**0**	0.15
22 yr Vol Inc.	0	0	0	266	0	4	0	183	171	6	234	0	Vol Inc
22 yr % Inc.	#DIV/0!	#DIV/0!	#DIV/0!	39%	#DIV/0!	400%	#DIV/0!	46%	44%	60%	42%	#DIV/0!	

PM Peak	Eastbound			Westbound			Northbound			Southbound			% Vol Inc
Year	LT	THRU	RT	LT	THRU	RT	LT	THRU	RT	LT	THRU	RT	Breakup
2003	**0**	**0**	**0**	**378**	**0**	**2**	**0**	**703**	**723**	**10**	**709**	**0**	
2005	0	0	0	405	0	3	0	767	791	10	737	0	0.2
2010	0	0	0	445	0	4	0	863	894	10	778	0	0.3
2015	0	0	0	472	0	4	0	927	962	10	806	0	0.2
2020	0	0	0	492	0	5	0	975	1014	10	826	0	0.15
2025	**0**	**0**	**0**	**512**	**0**	**5**	**0**	**1023**	**1065**	**10**	**847**	**0**	0.15
22 yr Vol Inc.	0	0	0	134	0	3	0	320	342	0	138	0	Vol Inc
22 yr % Inc.	#DIV/0!	#DIV/0!	#DIV/0!	35%	#DIV/0!	150%	#DIV/0!	46%	47%	0%	19%	#DIV/0!	

Intermediate Year Turning Movement Count Calculations

Intersection: Craycroft Road at Territory Drive

Date Exist Data Taken: 9/24/2000

AM Peak	Eastbound			Westbound			Northbound			Southbound			% Vol Inc
Year	LT	THRU	RT	LT	THRU	RT	LT	THRU	RT	LT	THRU	RT	Breakup
2003	**7**	**1**	**19**	**182**	**0**	**28**	**6**	**336**	**25**	**6**	**594**	**2**	
2005	7	1	19	193	1	29	7	372	28	7	651	3	0.2
2010	7	1	19	210	3	32	9	425	32	8	736	4	0.3
2015	7	1	19	221	4	33	10	461	35	8	793	4	0.2
2020	7	1	19	229	4	34	10	487	37	9	835	5	0.15
2025	**9**	**5**	**24**	**237**	**5**	**35**	**11**	**514**	**39**	**9**	**878**	**5**	0.15
22 yr Vol Inc.	2	4	5	55	5	7	5	178	14	3	284	3	Vol Inc
22 yr % Inc.	29%	400%	26%	30%	#DIV/0!	25%	83%	53%	56%	50%	48%	150%	

PM Peak	Eastbound			Westbound			Northbound			Southbound			% Vol Inc
Year	LT	THRU	RT	LT	THRU	RT	LT	THRU	RT	LT	THRU	RT	Breakup
2003	**3**	**1**	**6**	**43**	**0**	**14**	**3**	**632**	**104**	**33**	**451**	**13**	
2005	3	1	6	45	1	15	3	685	113	36	489	15	0.2
2010	3	1	6	49	3	16	4	764	126	41	546	17	0.3
2015	3	1	6	51	4	17	4	817	134	44	583	19	0.2
2020	3	1	6	52	4	17	5	856	141	47	612	20	0.15
2025	**5**	**5**	**8**	**54**	**5**	**18**	**5**	**896**	**147**	**49**	**640**	**21**	0.15
22 yr Vol Inc.	2	4	2	11	5	4	2	264	43	16	189	8	Vol Inc
22 yr % Inc.	67%	400%	33%	26%	#DIV/0!	29%	67%	42%	41%	48%	42%	62%	

Intermediate Year Turning Movement Count Calculations

Intersection: River Road at Craycroft Road

Date Exist Data Taken: 2/26/2003

AM Peak	Eastbound			Westbound			Northbound			Southbound			% Vol Inc
Year	LT	THRU	RT	LT	THRU	RT	LT	THRU	RT	LT	THRU	RT	Breakup
2003	**86**	**291**	**105**	**595**	**415**	**101**	**54**	**261**	**51**	**138**	**1043**	**75**	
2005	90	305	110	616	473	109	58	281	55	149	1124	81	0.2
2010	96	326	118	648	560	121	65	312	61	165	1247	90	0.3
2015	100	340	123	669	617	128	69	332	64	176	1328	96	0.2
2020	103	351	126	684	661	134	72	347	67	184	1389	101	0.15
2025	**106**	**361**	**130**	**700**	**704**	**140**	**75**	**362**	**70**	**192**	**1450**	**105**	0.15
22 yr Vol Inc.	20	70	25	105	289	39	21	101	19	54	407	30	Vol Inc
22 yr % Inc.	23%	24%	24%	18%	70%	39%	39%	39%	37%	39%	39%	40%	

PM Peak	Eastbound			Westbound			Northbound			Southbound			% Vol Inc
Year	LT	THRU	RT	LT	THRU	RT	LT	THRU	RT	LT	THRU	RT	Breakup
2003	**54**	**479**	**142**	**265**	**183**	**56**	**251**	**815**	**502**	**107**	**498**	**25**	
2005	57	502	149	286	197	60	271	879	541	115	537	27	0.2
2010	61	537	159	317	219	67	300	974	600	128	595	30	0.3
2015	63	560	166	337	233	71	320	1038	639	136	634	32	0.2
2020	65	577	171	353	244	75	334	1085	668	143	663	34	0.15
2025	**67**	**594**	**176**	**368**	**255**	**78**	**349**	**1133**	**697**	**149**	**692**	**35**	0.15
22 yr Vol Inc.	13	115	34	103	72	22	98	318	195	42	194	10	Vol Inc
22 yr % Inc.	24%	24%	24%	39%	39%	39%	39%	39%	39%	39%	39%	40%	

Intersection: River Road At Tanuri Drive

Date Exist Data Taken: 9/23/2003

AM Peak	Eastbound			Westbound			Northbound			Southbound			% Vol Inc
Year	LT	THRU	RT	LT	THRU	RT	LT	THRU	RT	LT	THRU	RT	Breakup
2003	**39**	**366**	**6**	**11**	**900**	**27**	**23**	**2**	**3**	**42**	**4**	**134**	
2005	42	396	6	11	977	30	25	3	3	45	4	145	0.2
2010	46	442	6	12	1093	34	27	4	4	50	5	161	0.3
2015	48	472	6	12	1170	36	29	4	4	53	5	172	0.2
2020	50	495	6	13	1227	38	30	5	5	56	5	180	0.15
2025	**52**	**518**	**6**	**13**	**1285**	**40**	**31**	**5**	**5**	**58**	**5**	**188**	0.15
22 yr Vol Inc.	13	152	0	2	385	13	8	3	2	16	1	54	Vol Inc
22 yr % Inc.	33%	42%	0%	18%	43%	48%	35%	150%	67%	38%	25%	40%	

PM Peak	Eastbound			Westbound			Northbound			Southbound			% Vol Inc
Year	LT	THRU	RT	LT	THRU	RT	LT	THRU	RT	LT	THRU	RT	Breakup
2003	**106**	**102**	**16**	**2**	**427**	**25**	**8**	**0**	**3**	**34**	**0**	**57**	
2005	112	108	17	3	465	28	9	1	3	37	1	62	0.2
2010	121	117	18	4	521	32	10	3	4	41	3	69	0.3
2015	126	123	19	4	559	35	10	4	4	43	4	74	0.2
2020	131	128	19	5	587	37	11	4	5	45	4	77	0.15
2025	**135**	**132**	**20**	**5**	**615**	**39**	**11**	**5**	**5**	**47**	**5**	**81**	0.15
22 yr Vol Inc.	29	30	4	3	188	14	3	5	2	13	5	24	Vol Inc
22 yr % Inc.	27%	29%	25%	150%	44%	56%	38%	#DIV/0!	67%	38%	#DIV/0!	42%	

Intermediate Year Turning Movement Count Calculations

Intersection: Sunrise Drive At Craycroft Road

Date Exist Data Taken: 3/19/2002

AM Peak	Eastbound			Westbound			Northbound			Southbound			% Vol Inc
Year	LT	THRU	RT	LT	THRU	RT	LT	THRU	RT	LT	THRU	RT	Breakup
2003	**62**	**317**	**198**	**305**	**381**	**8**	**86**	**90**	**101**	**6**	**175**	**94**	
2005	79	402	250	354	443	9	95	99	111	6	186	99	0.2
2010	106	530	329	429	536	11	108	112	125	7	202	108	0.3
2015	123	615	381	478	598	12	116	120	135	7	212	113	0.2
2020	136	679	420	515	645	12	123	127	142	7	220	117	0.15
2025	**149**	**743**	**459**	**552**	**691**	**13**	**129**	**133**	**149**	**7**	**228**	**121**	0.15
22 yr Vol Inc.	87	426	261	247	310	5	43	43	48	1	53	27	Vol Inc
22 yr % Inc.	140%	134%	132%	81%	81%	63%	50%	48%	48%	17%	30%	29%	

PM Peak	Eastbound			Westbound			Northbound			Southbound			% Vol Inc
Year	LT	THRU	RT	LT	THRU	RT	LT	THRU	RT	LT	THRU	RT	Breakup
2003	**123**	**630**	**268**	**145**	**396**	**12**	**272**	**144**	**323**	**12**	**81**	**79**	
2005	135	694	294	154	422	13	290	152	345	13	88	86	0.2
2010	154	791	334	168	461	14	318	165	378	15	98	96	0.3
2015	166	855	360	177	486	14	336	173	399	16	105	103	0.2
2020	175	904	379	183	506	15	349	180	416	16	110	108	0.15
2025	**184**	**952**	**399**	**190**	**525**	**15**	**363**	**186**	**432**	**17**	**115**	**113**	0.15
22 yr Vol Inc.	61	322	131	45	129	3	91	42	109	5	34	34	Vol Inc
22 yr % Inc.	50%	51%	49%	31%	33%	25%	33%	29%	34%	42%	42%	43%	

Intersection: Sunrise Drive At Wilmot Road

Date Exist Data Taken: 4/7/1999

AM Peak	Eastbound			Westbound			Northbound			Southbound			% Vol Inc
Year	LT	THRU	RT	LT	THRU	RT	LT	THRU	RT	LT	THRU	RT	Breakup
2003	**27**	**542**	**0**	**0**	**844**	**18**	**0**	**0**	**0**	**46**	**0**	**104**	
2005	29	580	0	0	920	19	0	0	0	50	0	113	0.2
2010	33	637	0	0	1035	22	0	0	0	56	0	126	0.3
2015	35	674	0	0	1111	23	0	0	0	60	0	135	0.2
2020	36	703	0	0	1169	24	0	0	0	63	0	141	0.15
2025	**38**	**731**	**0**	**0**	**1226**	**25**	**0**	**0**	**0**	**66**	**0**	**148**	0.15
22 yr Vol Inc.	11	189	0	0	382	7	0	0	0	20	0	44	Vol Inc
22 yr % Inc.	41%	35%	#DIV/0!	#DIV/0!	45%	39%	#DIV/0!	#DIV/0!	#DIV/0!	43%	#DIV/0!	42%	

PM Peak	Eastbound			Westbound			Northbound			Southbound			% Vol Inc
Year	LT	THRU	RT	LT	THRU	RT	LT	THRU	RT	LT	THRU	RT	Breakup
2003	**70**	**789**	**0**	**0**	**666**	**38**	**0**	**0**	**0**	**31**	**0**	**52**	
2005	76	861	0	0	718	40	0	0	0	34	0	57	0.2
2010	85	970	0	0	796	44	0	0	0	38	0	64	0.3
2015	91	1042	0	0	848	46	0	0	0	40	0	68	0.2
2020	96	1096	0	0	887	47	0	0	0	42	0	72	0.15
2025	**100**	**1150**	**0**	**0**	**926**	**49**	**0**	**0**	**0**	**44**	**0**	**75**	0.15
22 yr Vol Inc.	30	361	0	0	260	11	0	0	0	13	0	23	Vol Inc
22 yr % Inc.	43%	46%	#DIV/0!	#DIV/0!	39%	29%	#DIV/0!	#DIV/0!	#DIV/0!	42%	#DIV/0!	44%	

Existing TMC Calculations

Craycroft Road
At Sunrise Drive
3/19/2002
AM Turning Movements

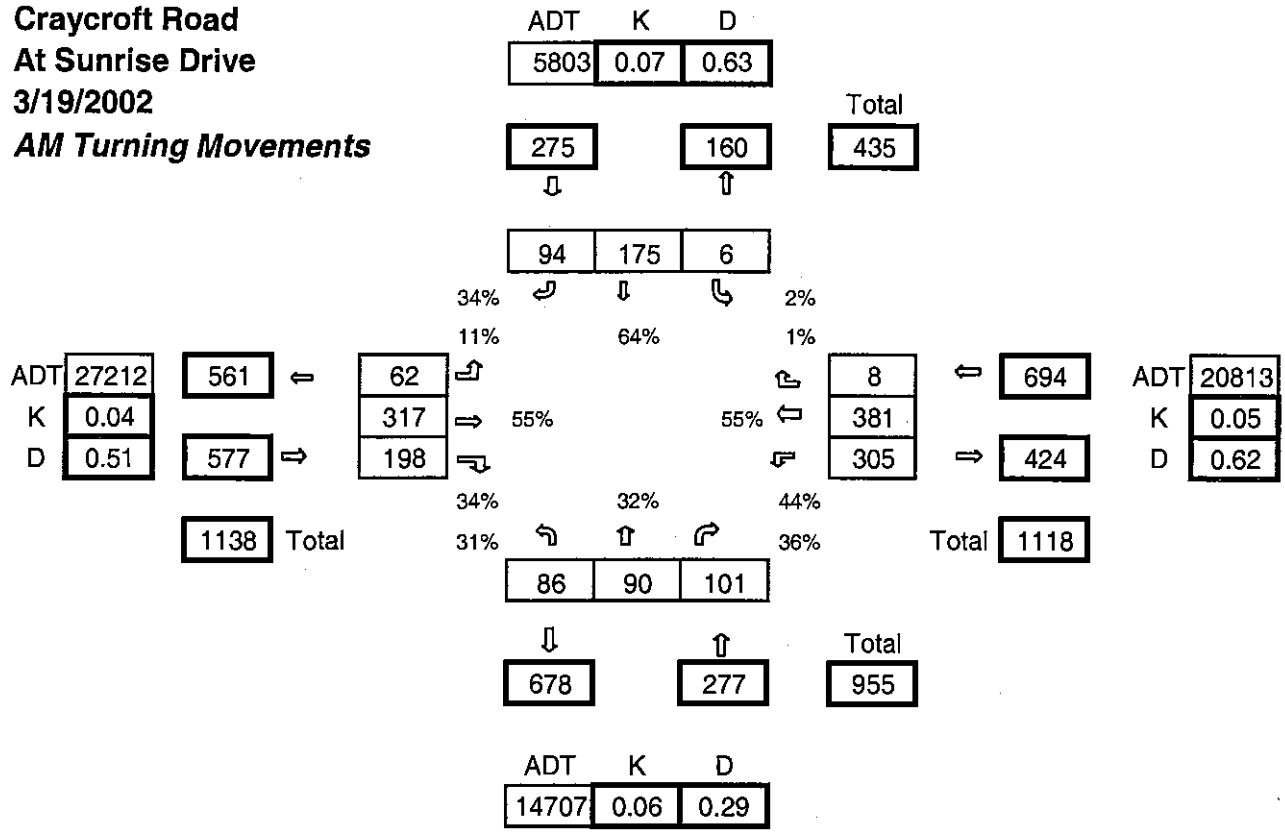

Craycroft Road
At Sunrise Drive
3/19/2002
PM Turning Movements

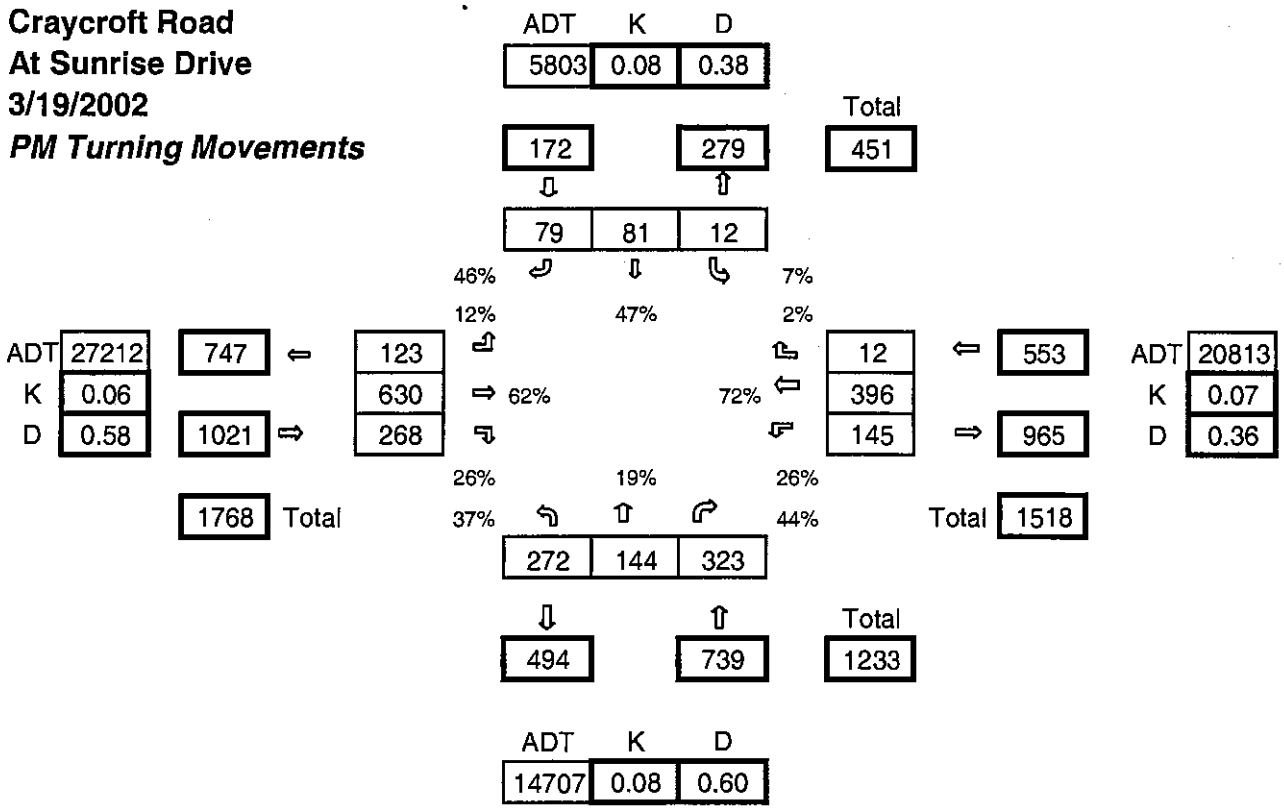

Future TMC Calculations

Sunrise Drive
At Craycroft Road
Year 2025
AM Turning Movements

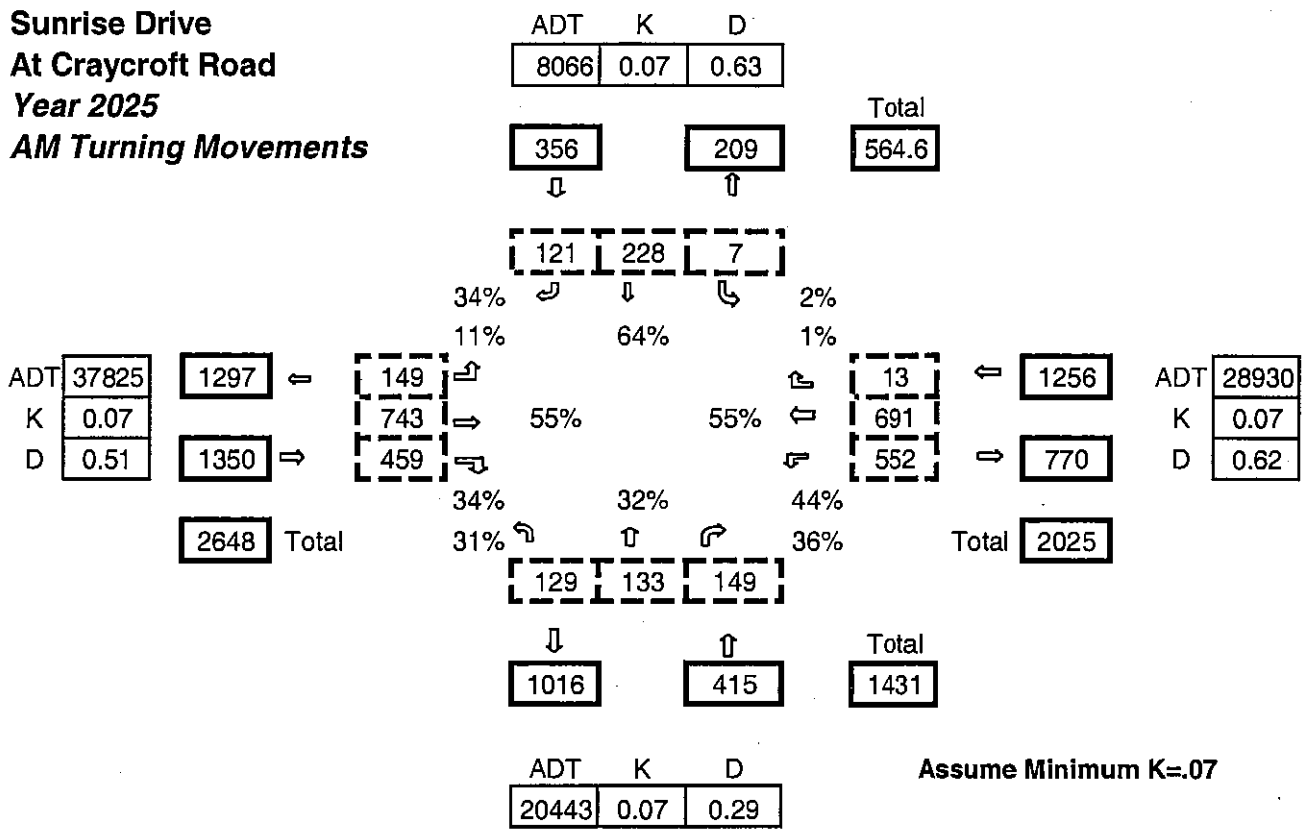

Assume Minimum K=.07

Sunrise Drive
At Craycroft Road
Year 2025
PM Turning Movements

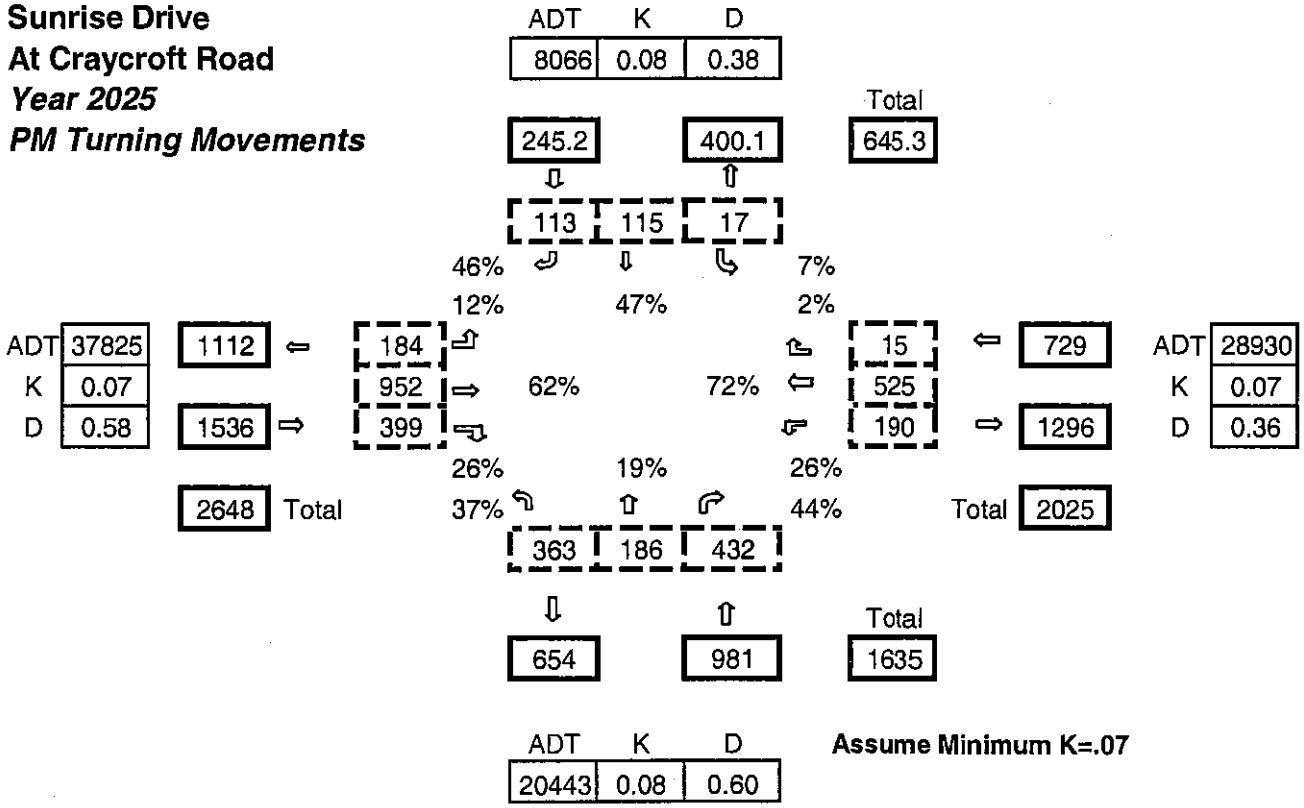

Assume Minimum K=.07

Existing TMC Calculations

Kolb Road
At Sunrise Drive
2/28/2002
AM Turning Movements

North leg:

ADT	K	D
9453	0.08	0.39

⇩	⇧	Total
292	452	744

Southbound movements: 131 | 131 | 30 (45%, 45%, 10%)

West leg: ADT 16945, K 0.06, D 0.45; ⇦ 561; ⇨ 467; Total 1028

Eastbound movements: 158 (34%), 193 (41%), 116 (25%)

East leg: ADT 11166, K 0.09, D 0.60; ⇦ 598; ⇨ 397; Total 995

Westbound movements: 157 (26%), 384 (64%), 57 (10%)

Northbound movements: 46 | 137 | 174 (13%, 38%, 49%)

South leg:

⇩	⇧	Total
304	357	661

ADT	K	D
12990	0.05	0.54

Assume K of .07

Kolb Road
At Sunrise Drive
2/28/2002
PM Turning Movements

North leg:

ADT	K	D
9453	0.10	0.42

⇩	⇧	Total
377	531	908

Southbound movements: 133 | 187 | 57 (35%, 50%, 15%)

West leg: ADT 16945, K 0.07, D 0.59; ⇦ 500; ⇨ 705; Total 1205

Eastbound movements: 244 (35%), 282 (40%), 179 (25%)

East leg: ADT 11166, K 0.09, D 0.43; ⇦ 410; ⇨ 543; Total 953

Westbound movements: 104 (25%), 253 (62%), 53 (13%)

Northbound movements: 114 | 183 | 204 (23%, 37%, 41%)

South leg:

⇩	⇧	Total
419	501	920

ADT	K	D
12990	0.07	0.54

G:\Projects\3015 NE Corr\Vol Proj Calcs\Exist TMC Calcs.xls
11/24/2003

Future TMC Calculations

Kolb Road
At Sunrise Drive
Year 2025
AM Turning Movements

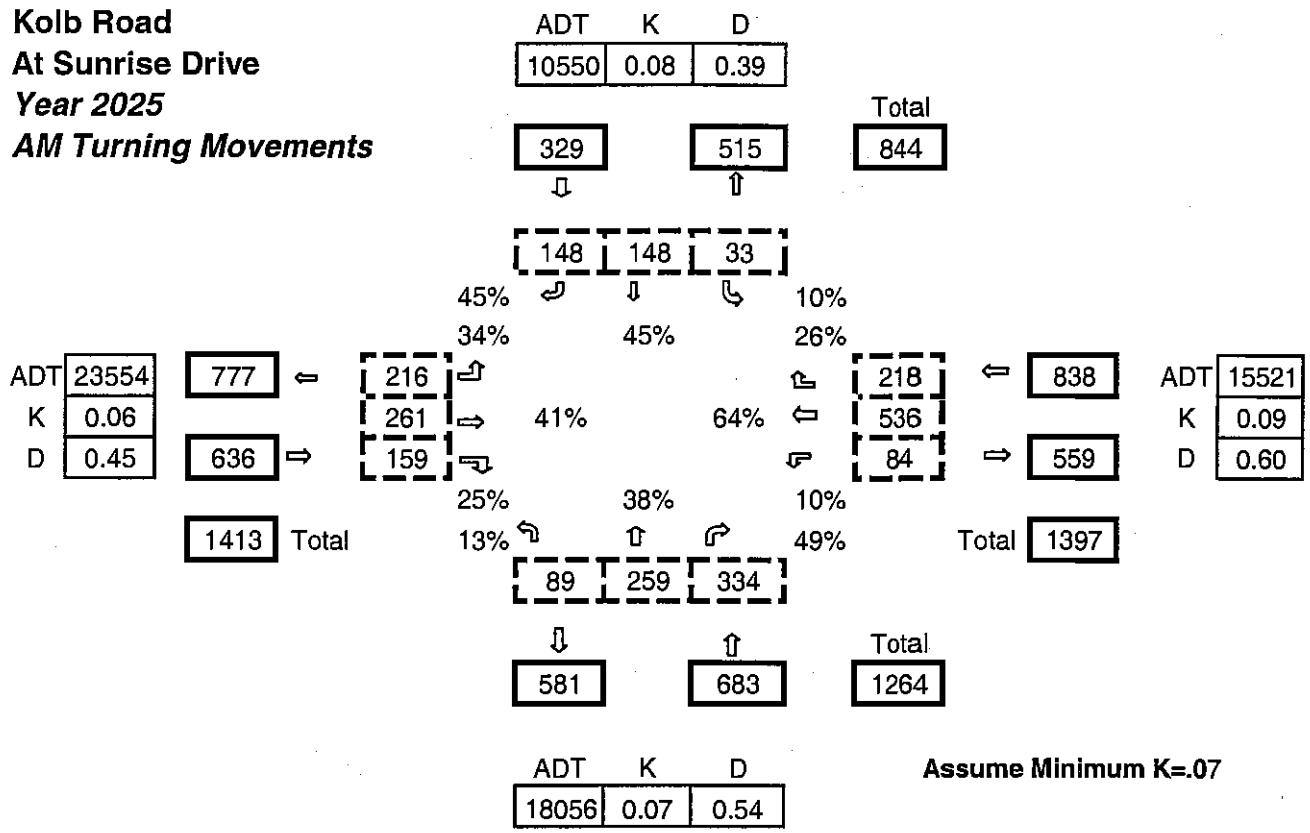

Assume Minimum K=.07

Kolb Road
At Sunrise Drive
Year 2025
PM Turning Movements

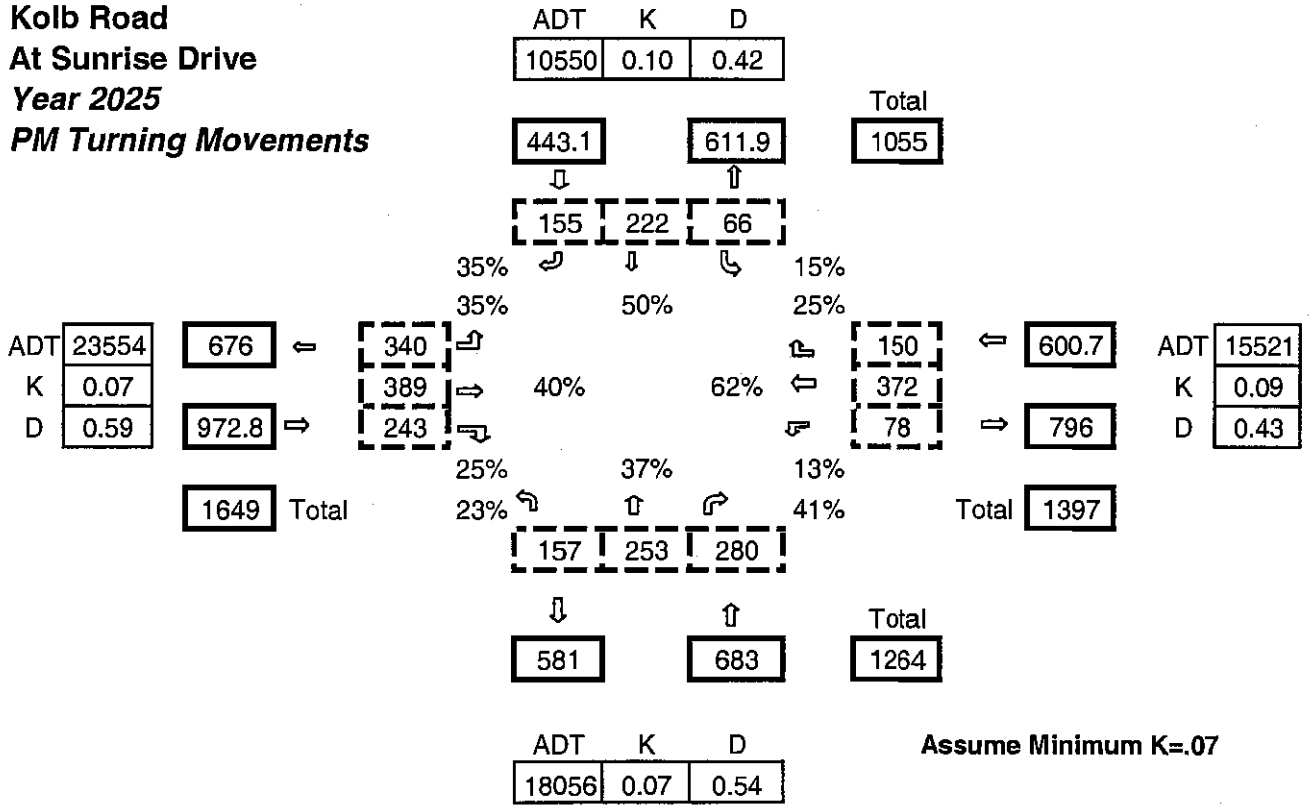

Assume Minimum K=.07

Future TMC Calculations

River Road
At Craycroft Road
Year 2025
AM Turning Movements

Rev 2003

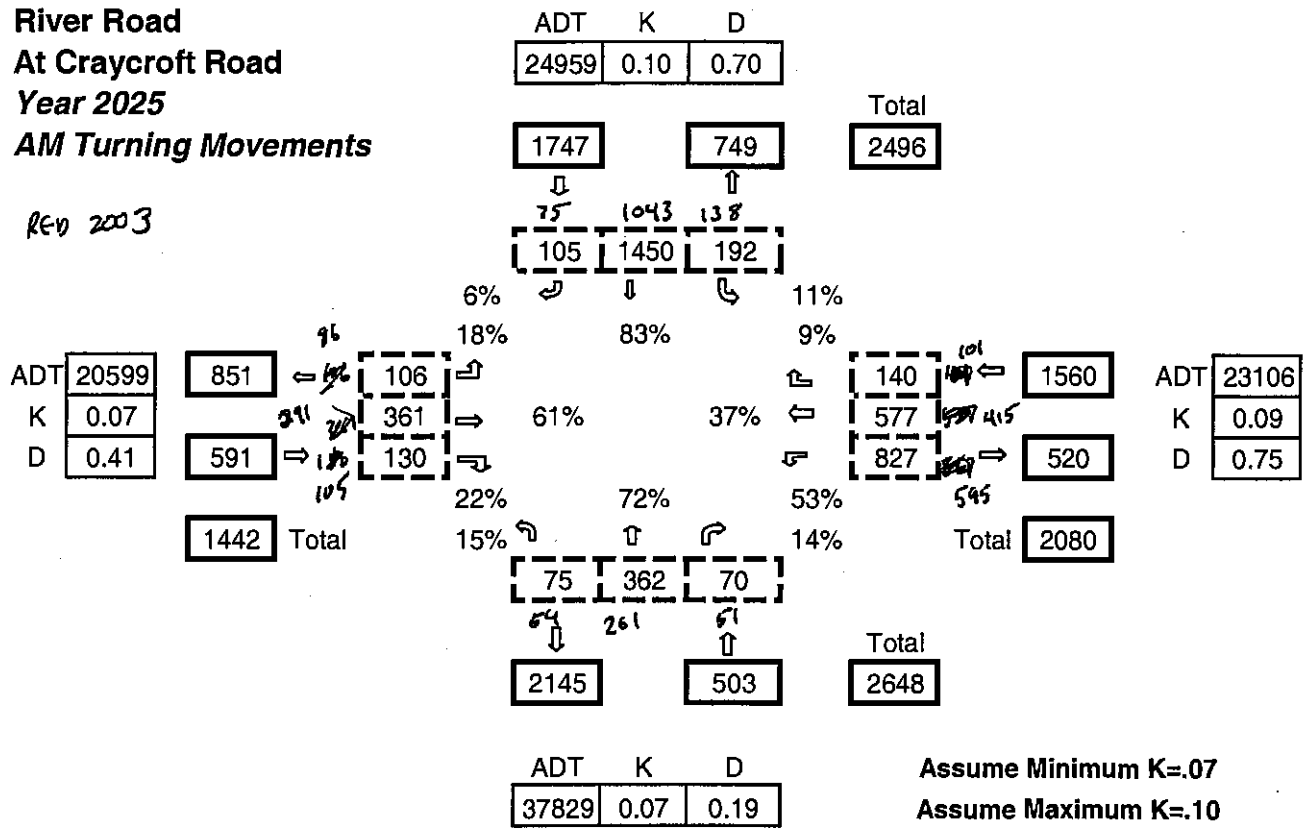

Assume Minimum K=.07
Assume Maximum K=.10

River Road
At Craycroft Road
Year 2025
PM Turning Movements

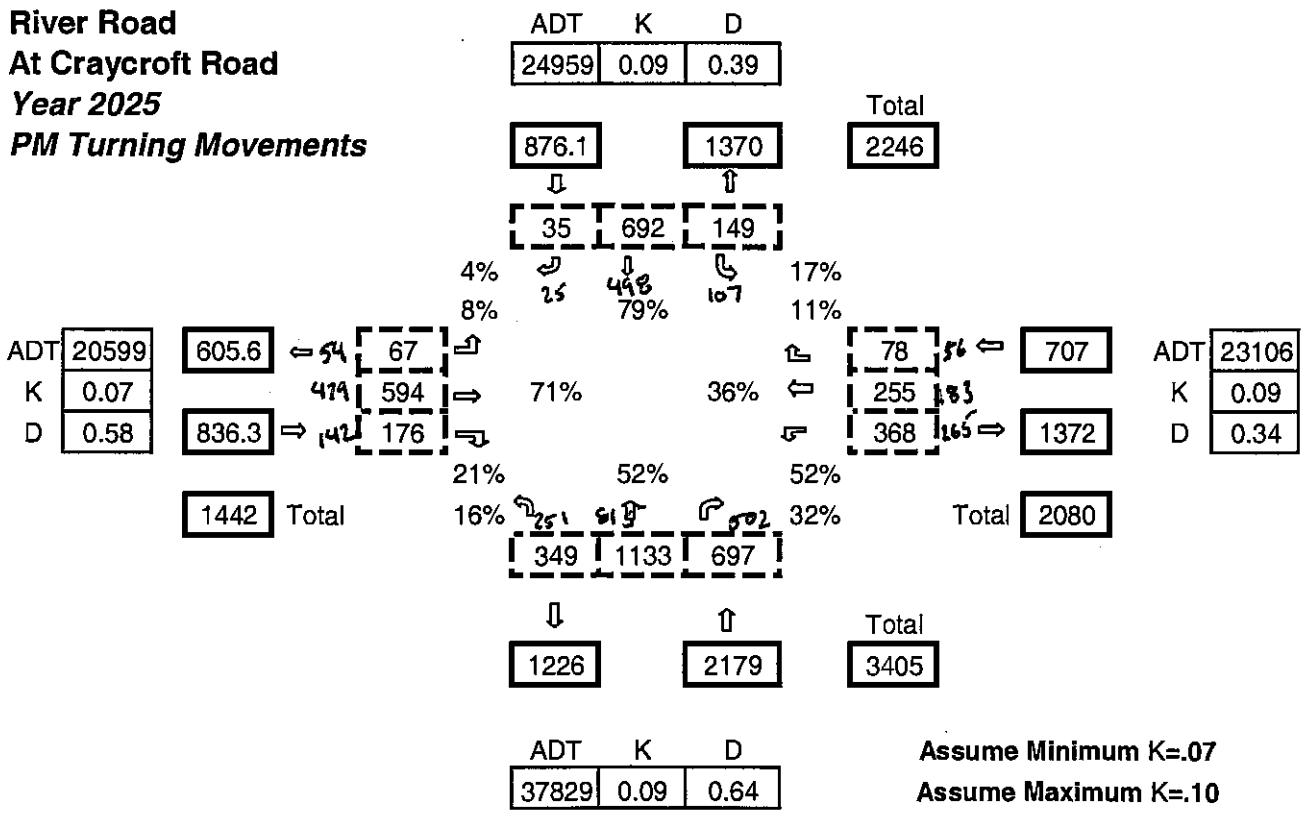

Assume Minimum K=.07
Assume Maximum K=.10

G:\Projects\3015 NE Corr\Vol Proj Calcs\Future TMC Calcs.xls
12/12/2003

Existing TMC Calculations

River Road
At Craycroft Rd
2/26/2003
AM Turning Movements

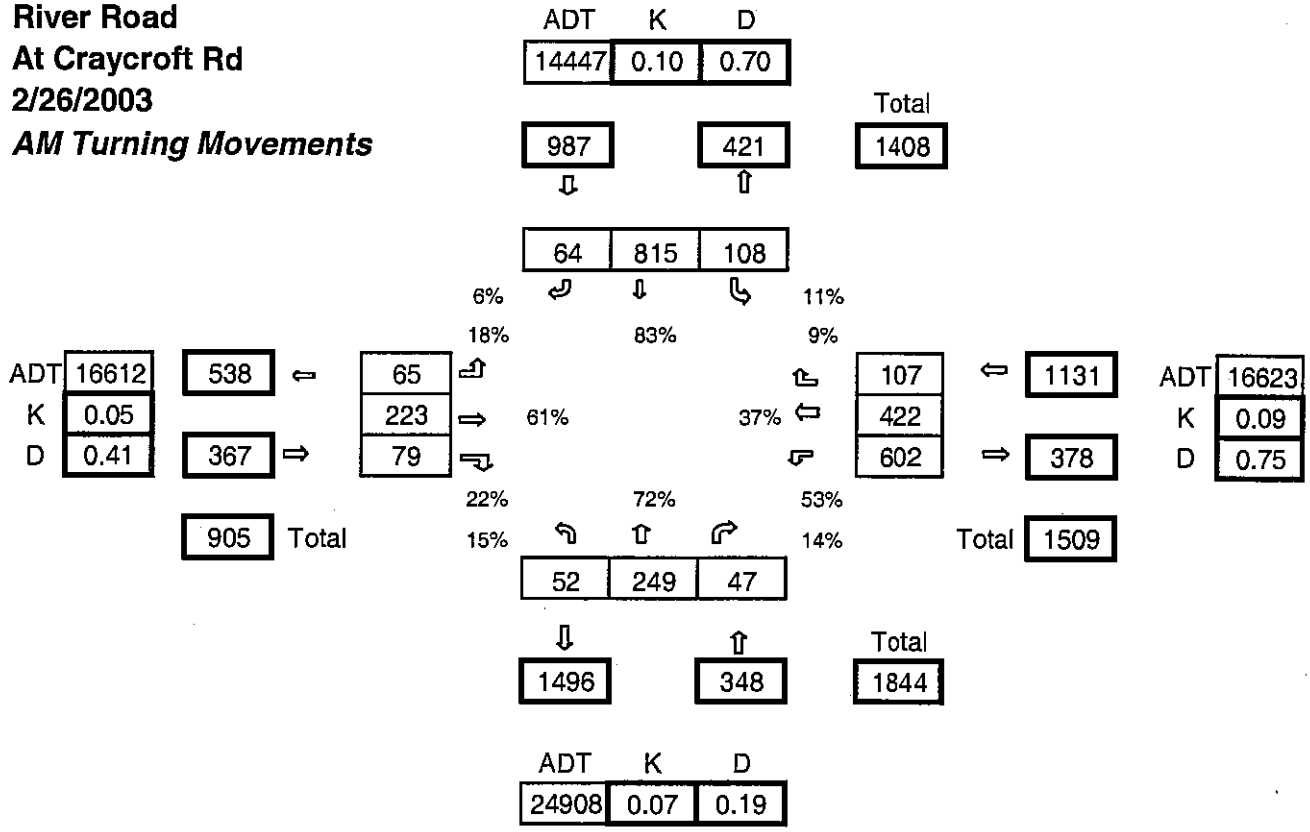

River Road
At Craycroft Rd
2/26/2003
PM Turning Movements

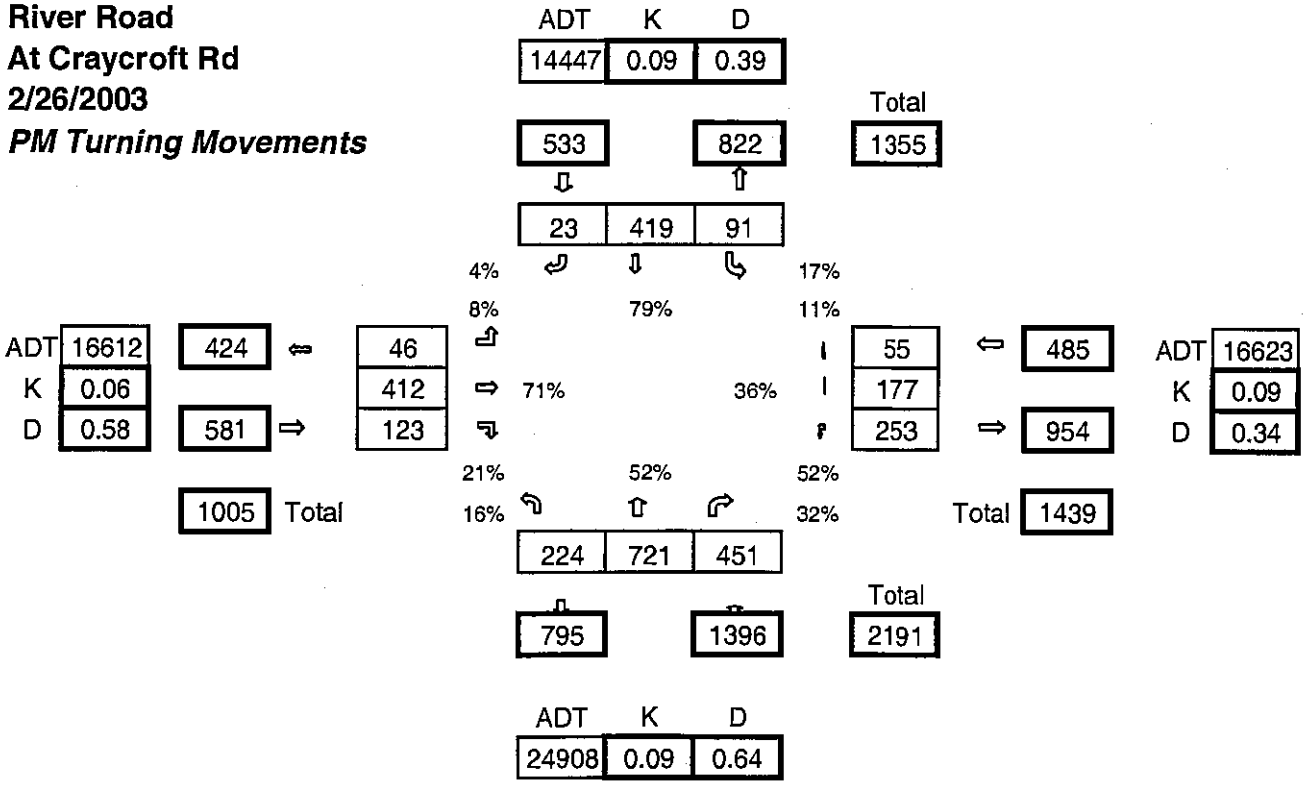

G:\Projects\3015 NE Corr\Vol Proj Calcs\Exist TMC Calcs.xls
12/12/2003

Future TMC Calculations

Craycroft Road
At Territory Drive
Year 2025
AM Turning Movements

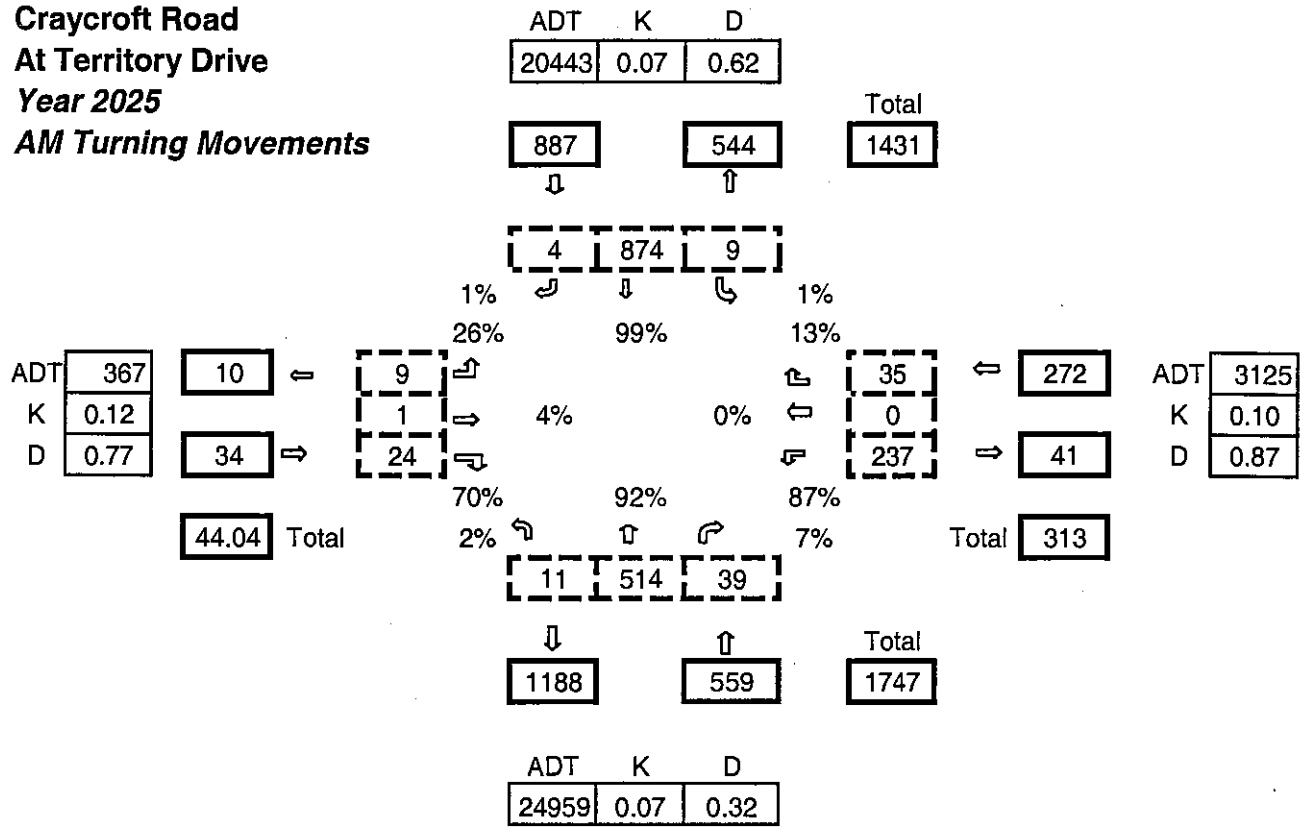

Craycroft Road
At Territory Drive
Year 2025
PM Turning Movements

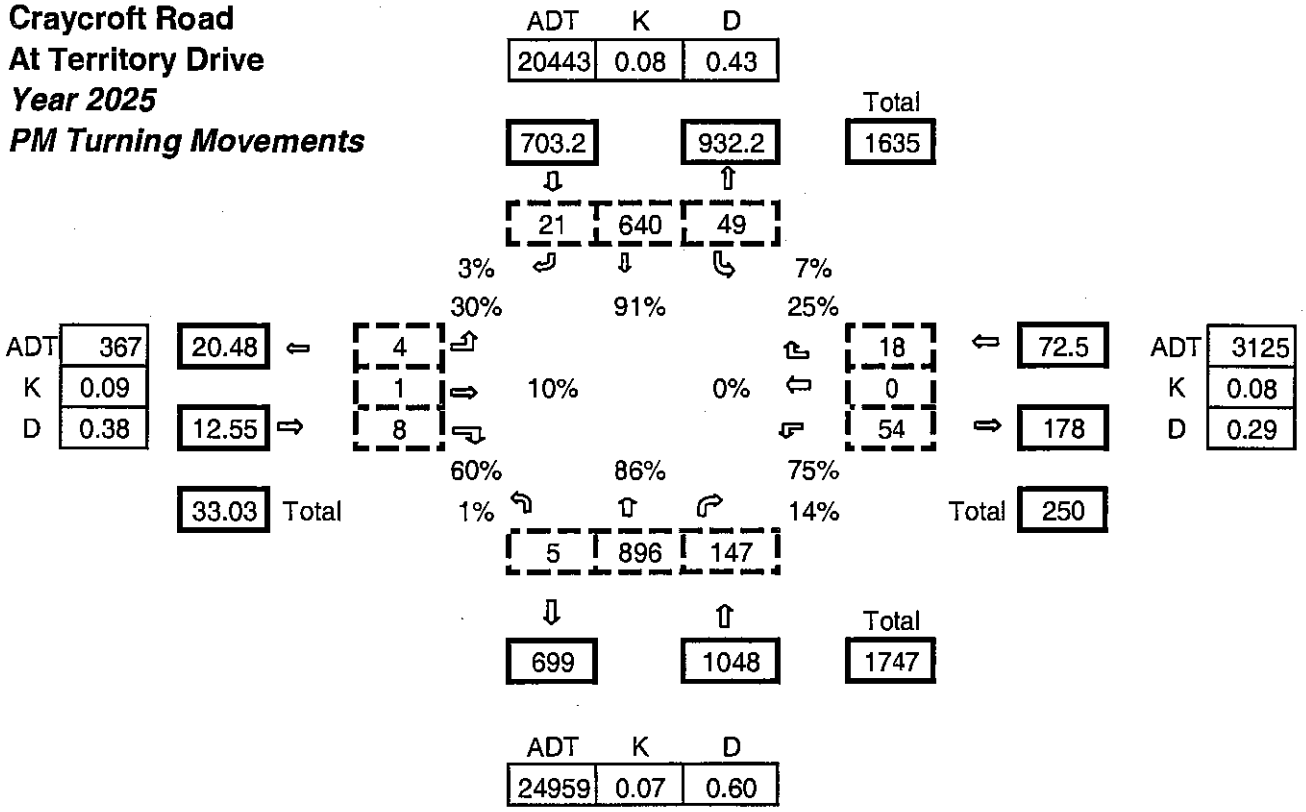

G:\Projects\3015 NE Corr\Vol Proj Calcs\Future TMC Calcs.xls
12/15/2003

Existing TMC Calculations

Craycroft Road
At Territory Drive
9/24/2000
AM Turning Movements

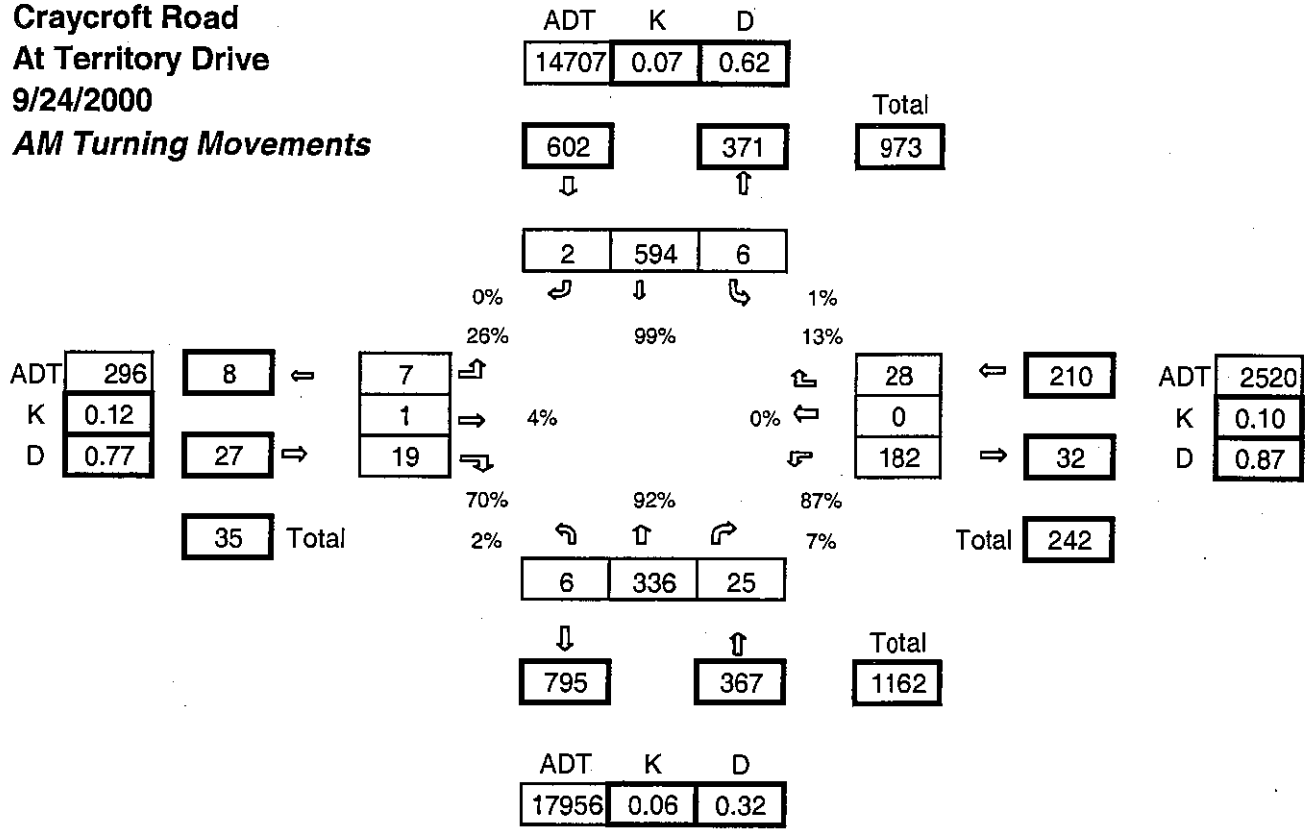

Craycroft Road
At Territory Drive
9/24/2000
PM Turning Movements

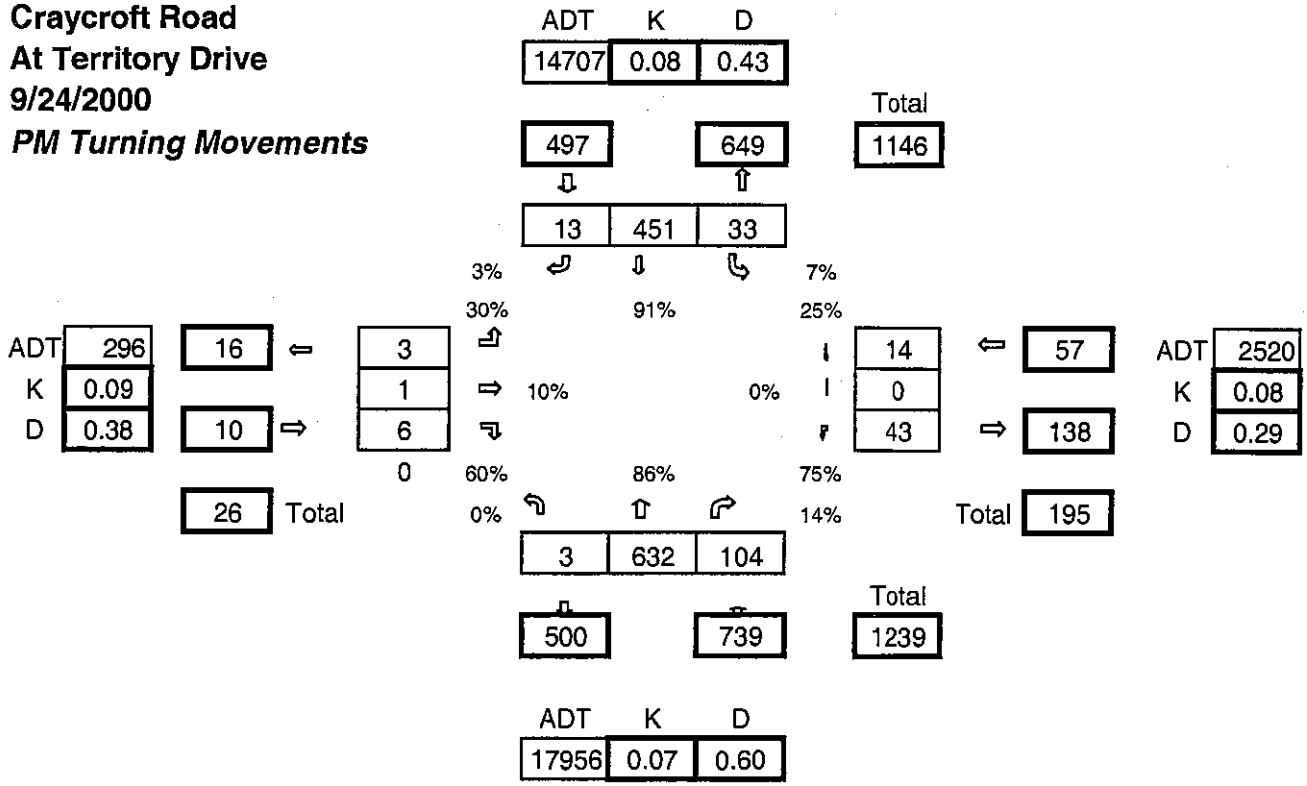

Existing TMC Calculations

Kolb Road
At Sabino Canyon Road
6/12/2003
AM Turning Movements

ADT	K	D
12313	0.08	0.59

		Total
568	401	969

0	558	10
0%	98%	2%

0%

ADT	0	0	0		1	689	ADT	13682
K	#####		0	#DIV/0! 0%	0		K	0.08
D	#####	0	0		688	399	D	0.63

51% 100%

0	Total	0%		49%	Total	1088

0	400	389

		Total
1246	789	2035

ADT	K	D
26353	0.08	0.39

Kolb Road
At Sabino Canyon Road
6/12/2003
PM Turning Movements

ADT	K	D
12313	~~0.12~~ .10	0.50

		Total
719	705	1424

0	709	10
0%	99%	1%

1%

ADT	0	0	0		2	380	ADT	13682
K	#####		0	#DIV/0! 0%	0		K	0.08
D	#####	0	0		378	733	D	0.34

49% 99%

0	Total	0%		51%	Total	1113

0	703	723

		Total
1087	1426	2513

ADT	K	D
26353	0.10	0.57

G:\Projects\3015 NE Corr\Vol Proj Calcs\Exist TMC Calcs.xls
11/24/2003

Future TMC Calculations

Kolb Road
At Sabino Canyon Road
Year 2025
AM Turning Movements

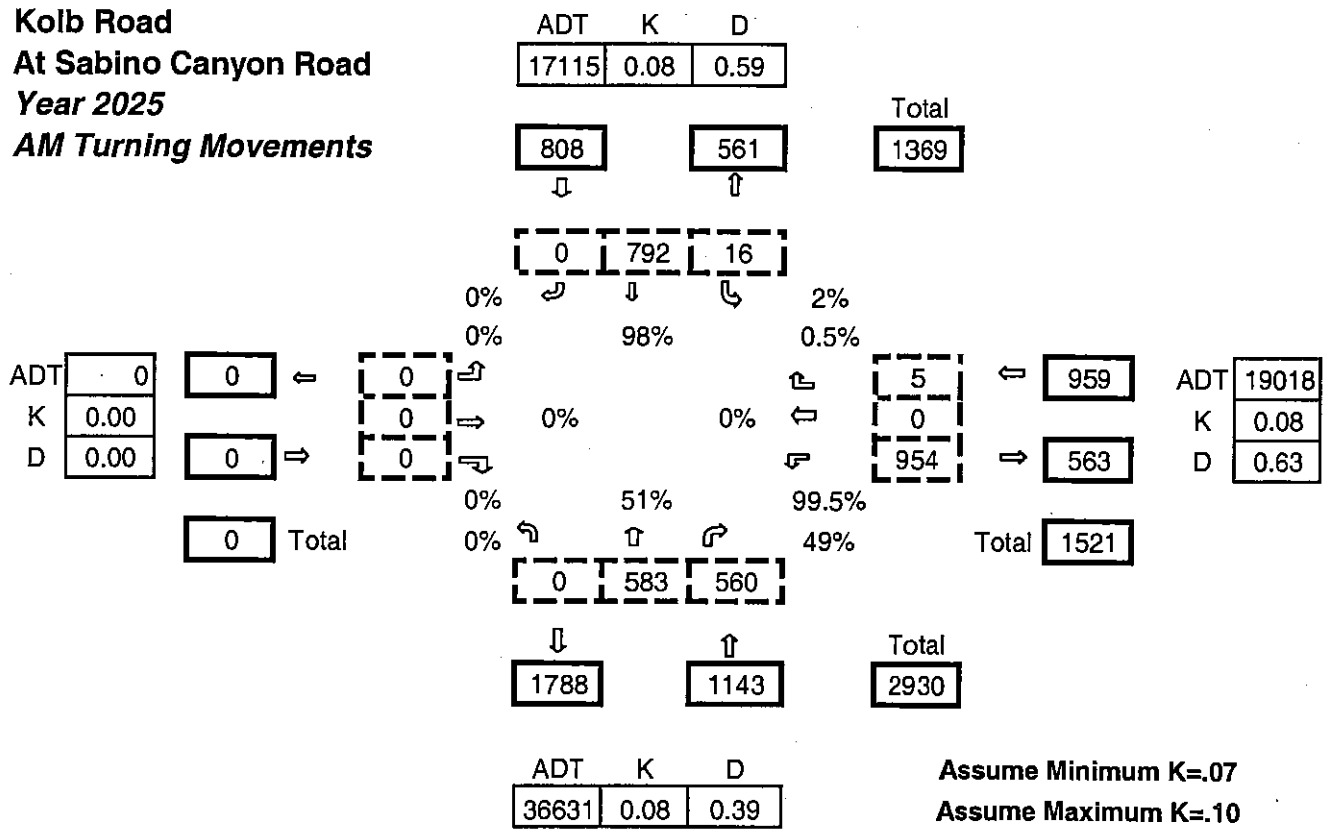

Assume Minimum K=.07
Assume Maximum K=.10

Kolb Road
At Sabino Canyon Road
Year 2025
PM Turning Movements

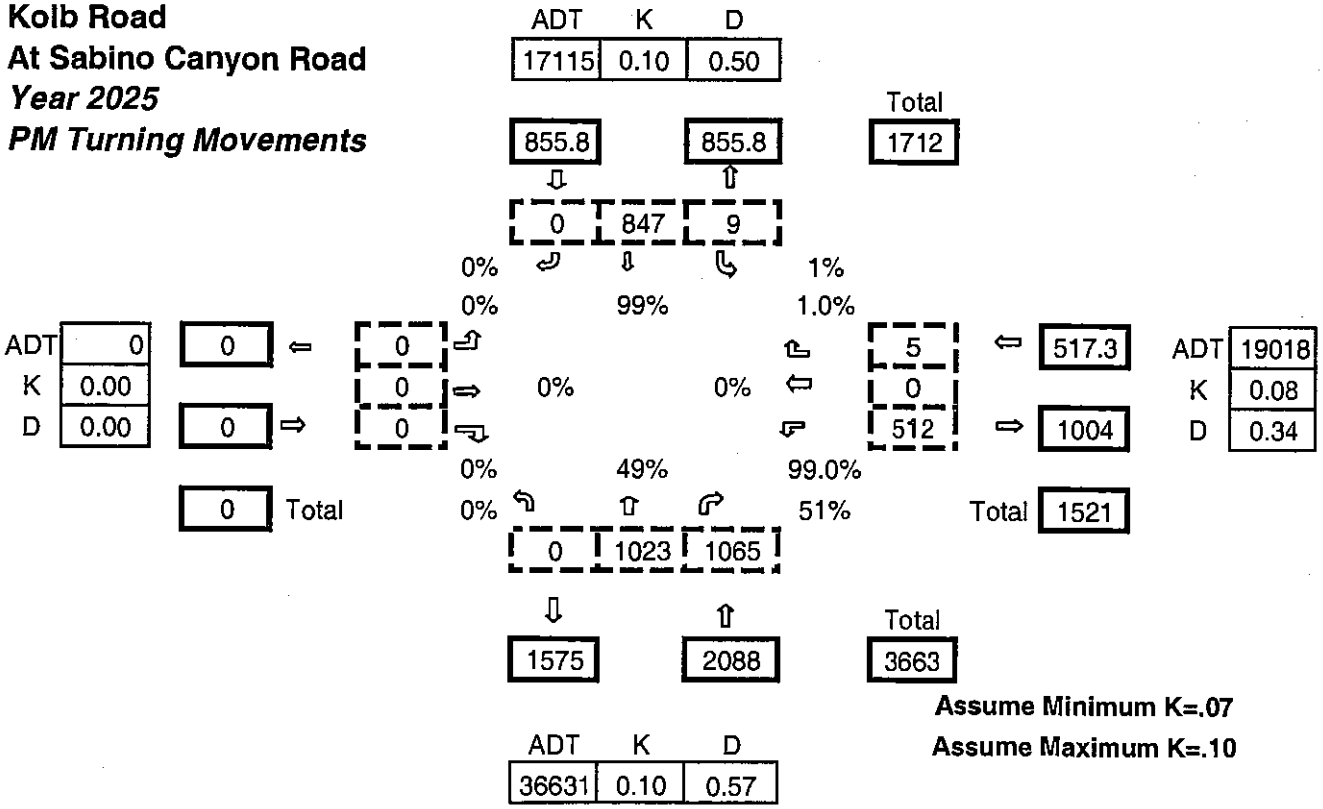

Assume Minimum K=.07
Assume Maximum K=.10

Existing TMC Calculations

Kolb Road
At Snyder Road
1/15/2002
AM Turning Movements

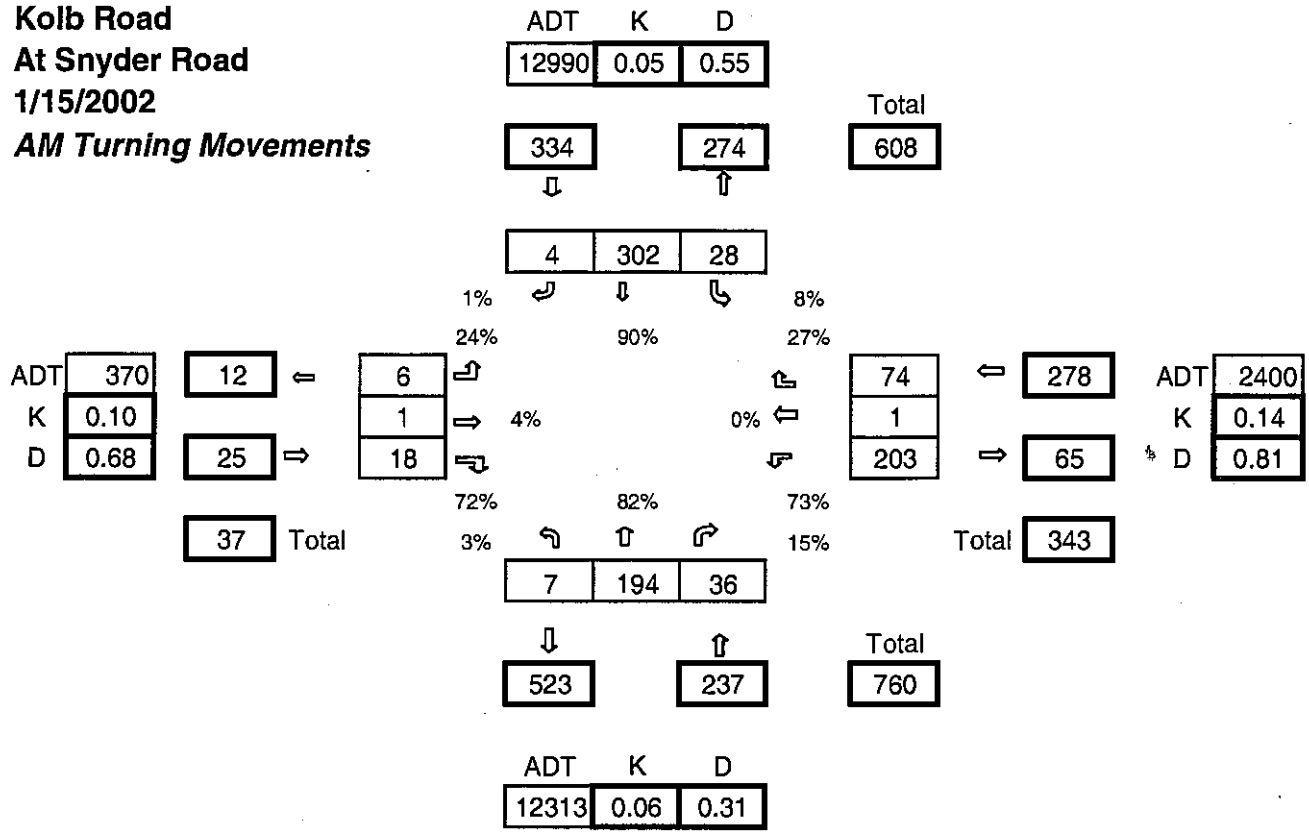

Kolb Road
At Snyder Road
1/15/2002
PM Turning Movements

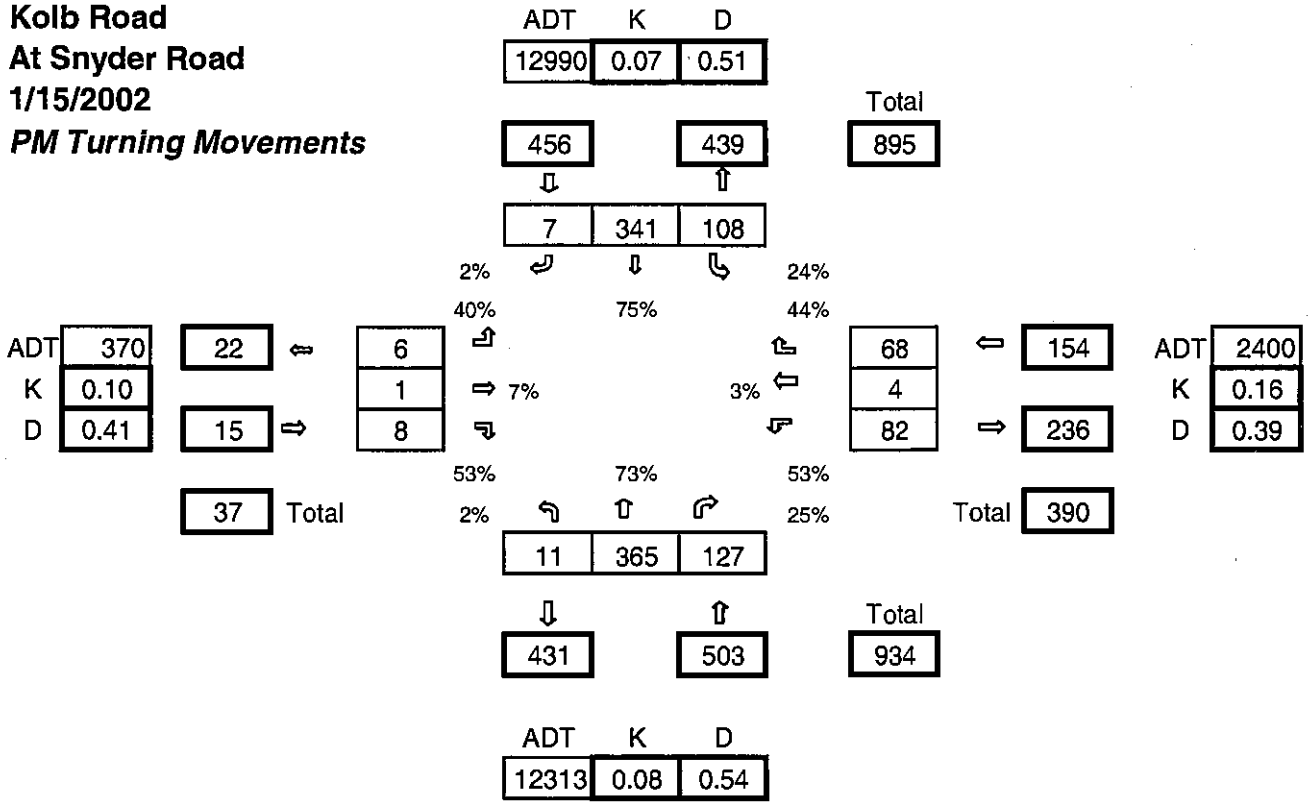

G:\Projects\3015 NE Corr\Vol Proj Calcs\Exist TMC Calcs.xls
11/24/2003

Future TMC Calculations

Kolb Road
At Snyder Road
Year 2025
AM Turning Movements

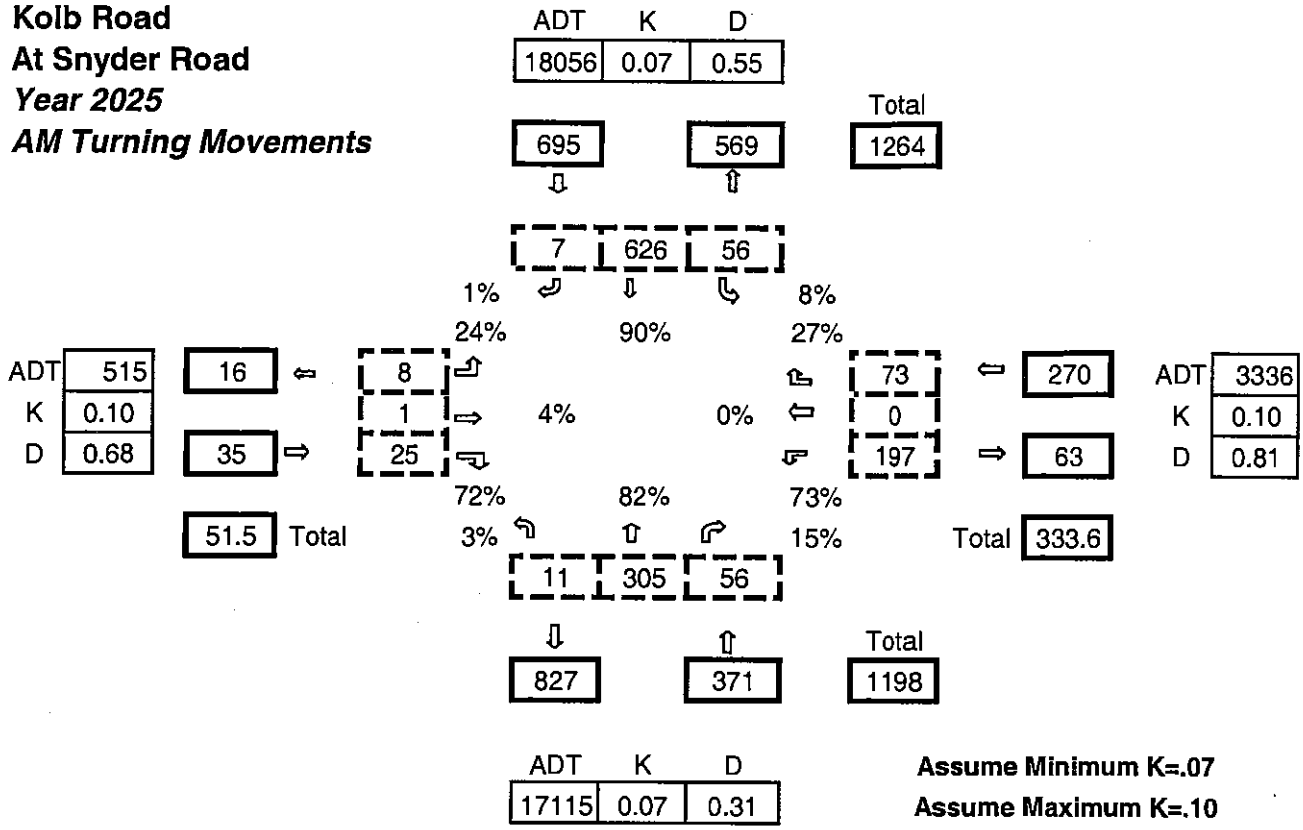

Assume Minimum K=.07
Assume Maximum K=.10

Kolb Road
At Snyder Road
Year 2025
PM Turning Movements

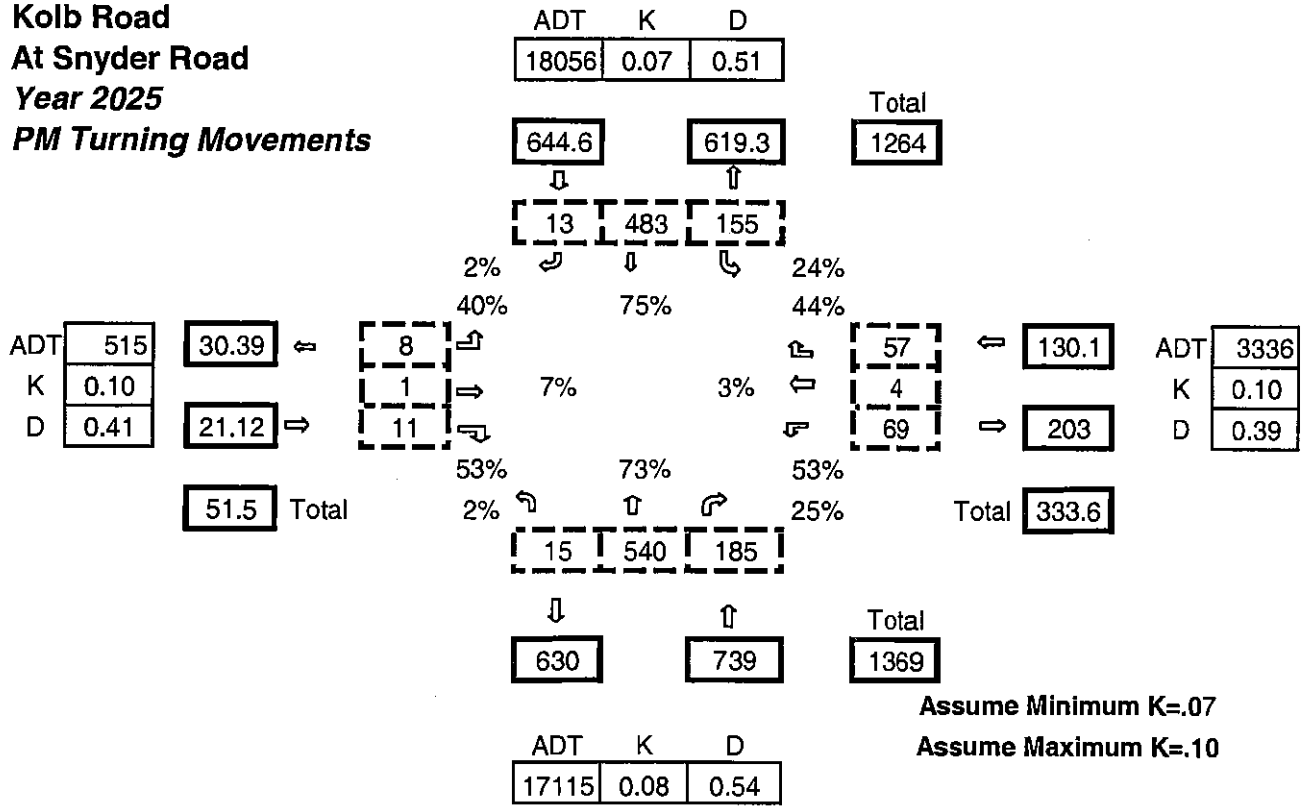

Assume Minimum K=.07
Assume Maximum K=.10

APPENDIX B. INTERSECTION CAPACITY ANALYSIS WORKSHEETS

CHAPTER 16 - OPERATIONAL ANALYSIS - SUMMARY WORKSHEET

General Information		Site Information		
Analyst	MDA	Jurisdiction/Date	PCDOT	12/31/2003
Agency or Company	CEI	EB/WB Street	Sunrise Drive	
Analysis Period/Year	AM 2003	NB/SB Street	Craycroft Road	
Comment	Analysis 1			

Intersection Data

Area type: Others Analysis period: 0.25 h Signal type: Pretimed % Back of queue: 95

	EB			WB			NB			SB		
	LT	TH	RT	LT	TH	RT	LT	TH	RT	LT	TH	RT
Volume (veh/h)	62	317	198	305	381	6	86	90	65	6	175	75
RTOR volume (veh/h)			0			2			36			19
Peak-hour factor	0.92	0.92	0.92	0.92	0.92	0.92	0.92	0.92	0.92	0.92	0.92	0.92
Heavy vehicles (%)	2	2	2	2	2	2	2	2	2	2	2	2
Start-up lost time, l_1 (s)	2.0	2.0	2.0	2.0	2.0	2.0	2.0	2.0	2.0	2.0	2.0	2.0
Extension of effective green, e (s)	2.0	2.0	2.0	2.0	2.0	2.0	2.0	2.0	2.0	2.0	2.0	2.0
Arrival type, AT	4	4	4	4	4		4	4	4	4	4	
Approach pedestrian volume (p/h)	5			5			5			5		
Approach bicycle volume (bic/h)	2			2			2			2		
Left/right parking (Y or N)	N	/	N	N	/	N	N	/	N	N	/	N

Signal Phasing Plan

L: LT T: TH R: RT P: Peds

	Phase 1	Phase 2	Phase 3	Phase 4	Phase 5	Phase 6	Phase 7	Phase 8
Green (s)	29.0	6.0	20.0	11.0				
Yellow + All red (s)	6.0	6.0	6.0	6.0				

Cycle (s): 90.0 Lost time per cycle (s): 24.0 Critical v/c Ratio: 0.845

Intersection Performance

	EB			WB			NB			SB		
Lane group configuration	L	T	R	L	TR		L	T	R	L	TR	
No. of lanes	1	2	1	1	1		1	1	1	1	1	
Flow rate (veh/h)	67	345	215	332	421		93	98	71	7	272	
Capacity (veh/h)	424	1143	683	562	599		216	228	190	393	391	
Adjusted saturation flow (veh/h)	1770	3547	1536	1770	1858		1770	1863	1553	1770	1761	
v/c ratio	0.159	0.302	0.315	0.590	0.703		0.432	0.430	0.372	0.017	0.695	
g/C ratio	0.456	0.322	0.444	0.456	0.322		0.122	0.122	0.122	0.222	0.222	
Average back of queue (veh)	0.8	3.3	3.1	5.4	10.3		2.4	2.5	1.8	0.1	7.3	
Initial queue in next period (veh)												
Uniform delay (s)	21.8	22.9	16.2	19.8	26.7		36.6	36.6	36.3	27.3	32.2	
Incremental delay (s)	0.8	0.7	1.2	4.5	6.8		6.2	5.8	5.5	0.1	9.8	
Initial queue delay (s)	0.0	0.0	0.0	0.0	0.0		0.0	0.0	0.0	0.0	0.0	
Delay (s)	18.9	22.9	14.8	20.9	32.7		42.8	42.4	41.8	27.4	42.0	
LOS	B	C	B	C	C		D	D	D	C	D	
Approach delay (s)/LOS	19.7	/	B	27.5	/	C	42.4	/	D	41.6	/	D
Intersection delay (s)/ LOS	29.0				/				C			

CHAPTER 16 - OPERATIONAL ANALYSIS - SUMMARY WORKSHEET

General Information		Site Information		
Analyst	MDA	Jurisdiction/Date	PCDOT	12/31/2003
Agency or Company	CEI	EB/WB Street	Sunrise Drive	
Analysis Period/Year	PM 2003	NB/SB Street	Craycroft Road	
Comment	analysis 1			

Intersection Data

Area type: Others Analysis period: 0.25 h Signal type: Pretimed % Back of queue: 95

	EB			WB			NB			SB		
	LT	TH	RT	LT	TH	RT	LT	TH	RT	LT	TH	RT
Volume (veh/h)	123	630	268	145	396	9	272	144	210	12	81	63
RTOR volume (veh/h)			0			3			113			16
Peak-hour factor	0.92	0.92	0.92	0.92	0.92	0.92	0.92	0.92	0.92	0.92	0.92	0.92
Heavy vehicles (%)	2	2	2	2	2	2	2	2	2	2	2	2
Start-up lost time, l_1 (s)	2.0	2.0	2.0	2.0	2.0	2.0	2.0	2.0	2.0	2.0	2.0	2.0
Extension of effective green, e (s)	2.0	2.0	2.0	2.0	2.0	2.0	2.0	2.0	2.0	2.0	2.0	2.0
Arrival type, AT	4	4	4	4	4		4	4	4	4	4	
Approach pedestrian volume (p/h)	5			5			5			5		
Approach bicycle volume (bic/h)	2			2			2			2		
Left/right parking (Y or N)	N	/	N	N	/	N	N	/	N	N	/	N

Signal Phasing Plan

L: LT T: TH R: RT P: Peds

	Phase 1	Phase 2	Phase 3	Phase 4	Phase 5	Phase 6	Phase 7	Phase 8
	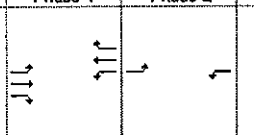							
Green (s)	31.0	5.0	10.0	20.0				
Yellow + All red (s)	6.0	6.0	6.0	6.0				

Cycle (s): 90.0 Lost time per cycle (s): 24.0 Critical v/c Ratio: 0.768

Intersection Performance

	EB			WB			NB			SB		
Lane group configuration	L	T	R	L	TR		L	T	R	L	TR	
No. of lanes	1	2	1	1	1		1	1	1	1	1	
Flow rate (veh/h)	134	685	291	158	440		296	157	228	13	157	
Capacity (veh/h)	419	1222	871	409	639		393	414	345	197	190	
Adjusted saturation flow (veh/h)	1770	3547	1537	1770	1855		1770	1863	1553	1770	1714	
v/c ratio	0.319	0.561	0.334	0.386	0.689		0.752	0.378	0.662	0.066	0.822	
g/C ratio	0.467	0.344	0.567	0.467	0.344		0.222	0.222	0.222	0.111	0.111	
Average back of queue (veh)	1.7	7.6	2.9	2.1	10.4		8.3	3.5	6.0	0.3	5.1	
Initial queue in next period (veh)												
Uniform delay (s)	23.0	24.0	10.4	21.6	25.4		32.7	29.7	31.9	35.8	39.1	
Incremental delay (s)	2.0	1.9	1.0	2.7	6.0		12.5	2.6	9.6	0.6	31.3	
Initial queue delay (s)	0.0	0.0	0.0	0.0	0.0		0.0	0.0	0.0	0.0	0.0	
Delay (s)	20.8	24.6	7.8	20.3	30.1		45.2	32.3	41.5	36.4	70.4	
LOS	C	C	A	C	C		D	C	D	D	E	
Approach delay (s)/LOS	19.7	/	B	27.5	/	C	41.0	/	D	67.8	/	E
Intersection delay (s)/ LOS	30.4				/				C			

CHAPTER 16 - OPERATIONAL ANALYSIS - SUMMARY WORKSHEET

General Information		***Site Information***		
Analyst	MDA	Jurisdiction/Date	PCDOT	12/31/2003
Agency or Company	CEI	EB/WB Street	Sunrise Drive	
Analysis Period/Year	AM 2005	NB/SB Street	Craycroft Road	
Comment	Analysis 2			

Intersection Data

Area type: Others | Analysis period: 0.25 h | Signal type: Pretimed | % Back of queue: 95

	EB			WB			NB			SB		
	LT	TH	RT	LT	TH	RT	LT	TH	RT	LT	TH	RT
Volume (veh/h)	79	402	250	354	443	6	95	99	65	6	175	75
RTOR volume (veh/h)			0			2			36			19
Peak-hour factor	0.92	0.92	0.92	0.92	0.92	0.92	0.92	0.92	0.92	0.92	0.92	0.92
Heavy vehicles (%)	2	2	2	2	2	2	2	2	2	2	2	2
Start-up lost time, l_1 (s)	2.0	2.0	2.0	2.0	2.0	2.0	2.0	2.0	2.0	2.0	2.0	2.0
Extension of effective green, e (s)	2.0	2.0	2.0	2.0	2.0	2.0	2.0	2.0	2.0	2.0	2.0	2.0
Arrival type, AT	4	4	4	4	4		4	4	4	4	4	
Approach pedestrian volume (p/h)	5			5			5			5		
Approach bicycle volume (bic/h)	2			2			2			2		
Left/right parking (Y or N)	N	/	N	N	/	N	N	/	N	N	/	N

Signal Phasing Plan

L: LT T: TH R: RT P: Peds

	Phase 1	Phase 2	Phase 3	Phase 4	Phase 5	Phase 6	Phase 7	Phase 8
Green (s)	29.0	6.0	20.0	11.0				
Yellow + All red (s)	6.0	6.0	6.0	6.0				

Cycle (s): 90.0 | Lost time per cycle (s): 24.0 | Critical v/c Ratio: 0.972

Intersection Performance

	EB			WB			NB			SB		
Lane group configuration	L	T	R	L	TR		L	T	R	L	TR	
No. of lanes	1	2	1	1	1		1	1	1	1	1	
Flow rate (veh/h)	86	437	272	385	488		103	108	71	7	272	
Capacity (veh/h)	369	1143	683	515	599		216	228	190	393	391	
Adjusted saturation flow (veh/h)	1770	3547	1536	1770	1858		1770	1863	1553	1770	1761	
v/c ratio	0.233	0.382	0.398	0.747	0.815		0.477	0.473	0.372	0.017	0.695	
g/C ratio	0.456	0.322	0.444	0.456	0.322		0.122	0.122	0.122	0.222	0.222	
Average back of queue (veh)	1.1	4.4	4.2	7.5	13.6		2.7	2.8	1.8	0.1	7.3	
Initial queue in next period (veh)												
Uniform delay (s)	25.8	23.6	16.9	24.2	28.0		36.8	36.8	36.3	27.3	32.2	
Incremental delay (s)	1.5	1.0	1.7	9.5	11.6		7.4	6.9	5.5	0.1	9.8	
Initial queue delay (s)	0.0	0.0	0.0	0.0	0.0		0.0	0.0	0.0	0.0	0.0	
Delay (s)	22.9	23.8	15.9	29.6	38.7		44.2	43.7	41.8	27.4	42.0	
LOS	C	C	B	C	D		D	D	D	C	D	
Approach delay (s)/LOS	21.0	/	C	34.7	/	C	43.4	/	D	41.6	/	D
Intersection delay (s)/ LOS	31.8				/					C		

CHAPTER 16 - OPERATIONAL ANALYSIS - SUMMARY WORKSHEET

General Information		Site Information		
Analyst	MDA	Jurisdiction/Date	PCDOT	12/31/2003
Agency or Company	CEI	EB/WB Street	Sunrise Drive	
Analysis Period/Year	PM 2005	NB/SB Street	Craycroft Road	
Comment	Analysis 2			

Intersection Data

Area type: Others Analysis period: 0.25 h Signal type: Pretimed % Back of queue: 95

	EB			WB			NB			SB		
	LT	TH	RT	LT	TH	RT	LT	TH	RT	LT	TH	RT
Volume (veh/h)	135	667	208	145	396	9	272	144	210	12	81	62
RTOR volume (veh/h)			0			3			113			17
Peak-hour factor	0.92	0.92	0.92	0.92	0.92	0.92	0.92	0.92	0.92	0.92	0.92	0.92
Heavy vehicles (%)	2	2	2	2	2	2	2	2	2	2	2	2
Start-up lost time, l_1 (s)	2.0	2.0	2.0	2.0	2.0	2.0	2.0	2.0	2.0	2.0	2.0	2.0
Extension of effective green, e (s)	2.0	2.0	2.0	2.0	2.0	2.0	2.0	2.0	2.0	2.0	2.0	2.0
Arrival type, AT	4	4	4	4	4		4	4	4	4	4	
Approach pedestrian volume (p/h)	5			5			5			5		
Approach bicycle volume (bic/h)	2			2			2			2		
Left/right parking (Y or N)	N	/	N	N	/	N	N	/	N	N	/	N

Signal Phasing Plan

L: LT T: TH R: RT P: Peds

	Phase 1	Phase 2	Phase 3	Phase 4	Phase 5	Phase 6	Phase 7	Phase 8
Green (s)	26.0	5.0	14.0	21.0				
Yellow + All red (s)	6.0	6.0	6.0	6.0				

Cycle (s): 90.0 Lost time per cycle (s): 24.0 Critical v/c Ratio: 0.773

Intersection Performance

	EB			WB			NB			SB		
Lane group configuration	L	T	R	L	TR		L	T	R	L	TR	
No. of lanes	1	2	1	1	1		1	1	1	1	1	
Flow rate (veh/h)	147	725	226	158	440		296	157	228	13	155	
Capacity (veh/h)	341	1025	801	339	536		413	435	362	275	267	
Adjusted saturation flow (veh/h)	1770	3547	1534	1770	1855		1770	1863	1553	1770	1715	
v/c ratio	0.430	0.708	0.282	0.465	0.821		0.716	0.360	0.630	0.047	0.582	
g/C ratio	0.411	0.289	0.522	0.411	0.289		0.233	0.233	0.233	0.156	0.156	
Average back of queue (veh)	2.4	9.7	2.5	2.6	12.7		8.0	3.4	5.8	0.3	4.1	
Initial queue in next period (veh)												
Uniform delay (s)	29.6	28.6	12.0	28.6	29.8		31.8	28.9	31.0	32.3	35.3	
Incremental delay (s)	3.9	4.1	0.9	4.5	13.3		10.2	2.3	8.1	0.3	9.0	
Initial queue delay (s)	0.0	0.0	0.0	0.0	0.0		0.0	0.0	0.0	0.0	0.0	
Delay (s)	30.0	32.5	9.7	29.8	43.0		42.0	31.2	39.1	32.6	44.3	
LOS	C	C	A	C	D		D	C	D	C	D	
Approach delay (s)/LOS	27.5	/	C	39.5	/	D	38.5	/	D	43.4	/	D
Intersection delay (s)/ LOS	34.3			/			C					

©Catalina Engineering, Inc.

CHAPTER 16 - OPERATIONAL ANALYSIS - SUMMARY WORKSHEET

General Information		Site Information		
Analyst	MDA	Jurisdiction/Date	PCDOT	12/31/2003
Agency or Company	CEI	EB/WB Street	Sunrise Drive	
Analysis Period/Year	AM 2010	NB/SB Street	Craycroft Road	
Comment	Analysis 3			

Intersection Data

Area type: Others Analysis period: 0.25 h Signal type: Pretimed % Back of queue: 95

	EB			WB			NB			SB		
	LT	TH	RT	LT	TH	RT	LT	TH	RT	LT	TH	RT
Volume (veh/h)	106	530	329	429	536	9	108	112	82	7	202	86
RTOR volume (veh/h)			0			2			43			22
Peak-hour factor	0.92	0.92	0.92	0.92	0.92	0.92	0.92	0.92	0.92	0.92	0.92	0.92
Heavy vehicles (%)	2	2	2	2	2	2	2	2	2	2	2	2
Start-up lost time, l_1 (s)	2.0	2.0	2.0	2.0	2.0	2.0	2.0	2.0	2.0	2.0	2.0	2.0
Extension of effective green, e (s)	2.0	2.0	2.0	2.0	2.0	2.0	2.0	2.0	2.0	2.0	2.0	2.0
Arrival type, AT	4	4	4	4	4		4	4	4	4	4	
Approach pedestrian volume (p/h)	5			5			5			5		
Approach bicycle volume (bic/h)	2			2			2			2		
Left/right parking (Y or N)	N	/	N	N	/	N	N	/	N	N	/	N

Signal Phasing Plan

L: LT T: TH R: RT P: Peds

	Phase 1	Phase 2	Phase 3	Phase 4	Phase 5	Phase 6	Phase 7	Phase 8
	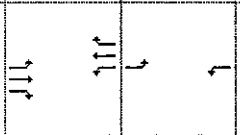							
Green (s)	27.0	9.0	16.0	14.0				
Yellow + All red (s)	6.0	6.0	6.0	6.0				

Cycle (s): 90.0 Lost time per cycle (s): 24.0 Critical v/c Ratio: 1.207

Intersection Performance

	EB			WB			NB			SB		
Lane group configuration	L	T	R	L	TR		L	T	R	L	TR	
No. of lanes	1	2	1	1	1		1	1	1	1	1	
Flow rate (veh/h)	115	576	358	466	592		117	122	89	8	313	
Capacity (veh/h)	378	1064	699	487	557		275	290	242	315	313	
Adjusted saturation flow (veh/h)	1770	3547	1535	1770	1857		1770	1863	1553	1770	1761	
v/c ratio	0.305	0.541	0.511	0.958	1.063		0.426	0.420	0.369	0.024	1.000	
g/C ratio	0.467	0.300	0.456	0.467	0.300		0.156	0.156	0.156	0.178	0.178	
Average back of queue (veh)	1.5	6.7	6.0	13.2	25.1		2.9	3.0	2.2	0.2	12.3	
Initial queue in next period (veh)					8.8							
Uniform delay (s)	30.8	26.3	17.4	29.7	31.5		34.4	34.3	34.0	30.6	37.0	
Incremental delay (s)	2.1	2.0	2.7	31.6	56.0		4.8	4.4	4.3	0.1	50.9	
Initial queue delay (s)	0.0	0.0	0.0	0.0	0.0		0.0	0.0	0.0	0.0	0.0	
Delay (s)	27.2	28.0	17.1	55.8	87.1		39.2	38.7	38.3	30.7	87.9	
LOS	C	C	B	E	F		D	D	D	C	F	
Approach delay (s)/LOS	24.2	/	C	73.3	/	E	38.8	/	D	86.5	/	F
Intersection delay (s)/ LOS	52.0				/				D			

CHAPTER 16 - OPERATIONAL ANALYSIS - SUMMARY WORKSHEET

General Information		Site Information		
Analyst	MDA	Jurisdiction/Date	PCDOT	12/31/2003
Agency or Company	CEI	EB/WB Street	Sunrise Drive	
Analysis Period/Year	PM 2010	NB/SB Street	Craycroft Road	
Comment	Analysis 3			

Intersection Data

Area type: Others Analysis period: 0.25 h Signal type: Pretimed % Back of queue: 95

	EB			WB			NB			SB		
	LT	TH	RT	LT	TH	RT	LT	TH	RT	LT	TH	RT
Volume (veh/h)	154	791	334	168	461	11	318	165	246	15	98	77
RTOR volume (veh/h)			0			3			132			19
Peak-hour factor	0.92	0.92	0.92	0.92	0.92	0.92	0.92	0.92	0.92	0.92	0.92	0.92
Heavy vehicles (%)	2	2	2	2	2	2	2	2	2	2	2	2
Start-up lost time, l_1 (s)	2.0	2.0	2.0	2.0	2.0	2.0	2.0	2.0	2.0	2.0	2.0	2.0
Extension of effective green, e (s)	2.0	2.0	2.0	2.0	2.0	2.0	2.0	2.0	2.0	2.0	2.0	2.0
Arrival type, AT	4	4	4	4	4		4	4	4	4	4	
Approach pedestrian volume (p/h)	5			5			5			5		
Approach bicycle volume (bic/h)	2			2			2			2		
Left/right parking (Y or N)	N	/	N	N	/	N	N	/	N	N	/	N

Signal Phasing Plan

L: LT T: TH R: RT P: Peds

	Phase 1	Phase 2	Phase 3	Phase 4	Phase 5	Phase 6	Phase 7	Phase 8
Green (s)	26.0	5.0	14.0	21.0				
Yellow + All red (s)	6.0	6.0	6.0	6.0				

Cycle (s): 90.0 Lost time per cycle (s): 24.0 Critical v/c Ratio: 0.945

Intersection Performance

	EB			WB			NB			SB		
Lane group configuration	L	T	R	L	TR		L	T	R	L	TR	
No. of lanes	1	2	1	1	1		1	1	1	1	1	
Flow rate (veh/h)	167	860	363	183	513		346	179	267	16	190	
Capacity (veh/h)	299	1025	801	299	536		413	435	362	275	267	
Adjusted saturation flow (veh/h)	1770	3547	1534	1770	1855		1770	1863	1553	1770	1713	
v/c ratio	0.560	0.839	0.453	0.611	0.957		0.837	0.413	0.738	0.059	0.714	
g/C ratio	0.411	0.289	0.522	0.411	0.289		0.233	0.233	0.233	0.156	0.156	
Average back of queue (veh)	3.0	13.3	4.8	3.5	18.1		10.5	4.0	7.4	0.4	5.4	
Initial queue in next period (veh)												
Uniform delay (s)	33.7	30.0	13.5	33.1	31.5		32.9	29.3	32.0	32.4	36.1	
Incremental delay (s)	7.4	8.2	1.8	9.0	29.7		18.0	2.9	12.6	0.4	15.1	
Initial queue delay (s)	0.0	0.0	0.0	0.0	0.0		0.0	0.0	0.0	0.0	0.0	
Delay (s)	37.2	38.1	11.6	38.2	61.0		50.9	32.2	44.6	32.8	51.2	
LOS	D	D	B	D	E		D	C	D	C	D	
Approach delay (s)/LOS	31.1	/	C	55.0	/	D	44.5	/	D	49.7	/	D
Intersection delay (s)/ LOS	41.2			/			D					

CHAPTER 16 - OPERATIONAL ANALYSIS - SUMMARY WORKSHEET

General Information		Site Information		
Analyst	MDA	Jurisdiction/Date	PCDOT	12/31/2003
Agency or Company	CEI	EB/WB Street	Sunrise Drive	
Analysis Period/Year	AM 2015	NB/SB Street	Craycroft Road	
Comment	Analysis 4			

Intersection Data

Area type: Others Analysis period: 0.25 h Signal type: Pretimed % Back of queue: 95

	EB			WB			NB			SB		
	LT	TH	RT	LT	TH	RT	LT	TH	RT	LT	TH	RT
Volume (veh/h)	123	615	381	478	598	9	116	120	88	7	212	90
RTOR volume (veh/h)			0			3			47			23
Peak-hour factor	0.92	0.92	0.92	0.92	0.92	0.92	0.92	0.92	0.92	0.92	0.92	0.92
Heavy vehicles (%)	2	2	2	2	2	2	2	2	2	2	2	2
Start-up lost time, l_1 (s)	2.0	2.0	2.0	2.0	2.0	2.0	2.0	2.0	2.0	2.0	2.0	2.0
Extension of effective green, e (s)	2.0	2.0	2.0	2.0	2.0	2.0	2.0	2.0	2.0	2.0	2.0	2.0
Arrival type, AT	4	4	4	4	4		4	4	4	4	4	
Approach pedestrian volume (p/h)	5			5			5			5		
Approach bicycle volume (bic/h)	2			2			2			2		
Left/right parking (Y or N)	N	/	N	N	/	N	N	/	N	N	/	N

Signal Phasing Plan

L: LT T: TH R: RT P: Peds

	Phase 1	Phase 2	Phase 3	Phase 4	Phase 5	Phase 6	Phase 7	Phase 8
	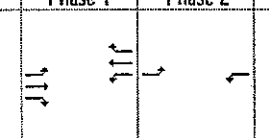							
Green (s)	27.0	9.0	16.0	14.0				
Yellow + All red (s)	6.0	6.0	6.0	6.0				

Cycle (s): 90.0 Lost time per cycle (s): 24.0 Critical v/c Ratio: 1.388

Intersection Performance

	EB			WB			NB			SB		
Lane group configuration	L	T	R	L	TR		L	T	R	L	TR	
No. of lanes	1	2	1	1	1		1	1	1	1	1	
Flow rate (veh/h)	134	668	414	520	660		126	130	96	8	328	
Capacity (veh/h)	378	1064	699	449	557		275	290	242	315	313	
Adjusted saturation flow (veh/h)	1770	3547	1535	1770	1858		1770	1863	1553	1770	1761	
v/c ratio	0.354	0.628	0.592	1.156	1.184		0.458	0.450	0.396	0.024	1.048	
g/C ratio	0.467	0.300	0.456	0.467	0.300		0.156	0.156	0.156	0.178	0.178	
Average back of queue (veh)	1.8	8.3	7.6	22.2	33.9		3.1	3.2	2.3	0.2	13.9	
Initial queue in next period (veh)				17.5	25.6						3.8	
Uniform delay (s)	33.8	27.2	18.3	31.7	31.5		34.6	34.5	34.2	30.6	37.0	
Incremental delay (s)	2.6	2.8	3.7	92.7	99.9		5.4	5.0	4.8	0.1	64.1	
Initial queue delay (s)	0.0	0.0	0.0	0.0	0.0		0.0	0.0	0.0	0.0	0.0	
Delay (s)	30.1	29.6	18.9	118.5	131.0		40.0	39.5	39.0	30.7	101.1	
LOS	C	C	B	F	F		D	D	D	C	F	
Approach delay (s)/LOS	26.0 / C			125.5 / F			39.5 / D			99.5 / F		
Intersection delay (s)/ LOS	73.6 / E											

CHAPTER 16 - OPERATIONAL ANALYSIS - SUMMARY WORKSHEET

General Information		Site Information		
Analyst	MDA	Jurisdiction/Date	PCDOT	12/31/2003
Agency or Company	CEI	EB/WB Street	Sunrise Drive	
Analysis Period/Year	PM 2015	NB/SB Street	Craycroft Road	
Comment	Analysis 4			

Intersection Data

Area type: Others Analysis period: 0.25 h Signal type: Pretimed % Back of queue: 95

	EB			WB			NB			SB		
	LT	TH	RT	LT	TH	RT	LT	TH	RT	LT	TH	RT
Volume (veh/h)	166	855	360	177	486	11	336	173	259	16	105	82
RTOR volume (veh/h)			0			3			140			21
Peak-hour factor	0.92	0.92	0.92	0.92	0.92	0.92	0.92	0.92	0.92	0.92	0.92	0.92
Heavy vehicles (%)	2	2	2	2	2	2	2	2	2	2	2	2
Start-up lost time, l_1 (s)	2.0	2.0	2.0	2.0	2.0	2.0	2.0	2.0	2.0	2.0	2.0	2.0
Extension of effective green, e (s)	2.0	2.0	2.0	2.0	2.0	2.0	2.0	2.0	2.0	2.0	2.0	2.0
Arrival type, AT	4	4	4	4	4		4	4	4	4	4	
Approach pedestrian volume (p/h)	5			5			5			5		
Approach bicycle volume (bic/h)	2			2			2			2		
Left/right parking (Y or N)	N	/	N	N	/	N	N	/	N	N	/	N

Signal Phasing Plan

L: LT T: TH R: RT P: Peds

	Phase 1	Phase 2	Phase 3	Phase 4	Phase 5	Phase 6	Phase 7	Phase 8
Green (s)	27.0	5.0	13.0	21.0				
Yellow + All red (s)	6.0	6.0	6.0	6.0				

Cycle (s): 90.0 Lost time per cycle (s): 24.0 Critical v/c Ratio: 1.003

Intersection Performance

	EB			WB			NB			SB		
Lane group configuration	L	T	R	L	TR		L	T	R	L	TR	
No. of lanes	1	2	1	1	1		1	1	1	1	1	
Flow rate (veh/h)	180	929	391	192	540		365	188	282	17	203	
Capacity (veh/h)	299	1064	819	299	557		413	435	362	256	248	
Adjusted saturation flow (veh/h)	1770	3547	1535	1770	1855		1770	1863	1553	1770	1714	
v/c ratio	0.603	0.873	0.478	0.643	0.971		0.884	0.433	0.777	0.068	0.821	
g/C ratio	0.422	0.300	0.533	0.422	0.300		0.233	0.233	0.233	0.144	0.144	
Average back of queue (veh)	3.3	15.0	5.2	3.7	19.4		11.8	4.2	8.1	0.4	6.4	
Initial queue in next period (veh)												
Uniform delay (s)	34.2	29.9	13.2	33.6	31.1		33.3	29.4	32.3	33.3	37.4	
Incremental delay (s)	8.7	9.9	2.0	10.2	31.5		23.1	3.1	15.1	0.5	25.4	
Initial queue delay (s)	0.0	0.0	0.0	0.0	0.0		0.0	0.0	0.0	0.0	0.0	
Delay (s)	38.5	39.4	11.4	39.4	62.2		56.4	32.5	47.4	33.8	62.8	
LOS	D	D	B	D	E		E	C	D	C	E	
Approach delay (s)/LOS	32.0 / C			56.2 / E			48.0 / D			60.5 / E		
Intersection delay (s)/ LOS	43.3 / D											

CHAPTER 16 - OPERATIONAL ANALYSIS - SUMMARY WORKSHEET

General Information		Site Information		
Analyst	MDA	Jurisdiction/Date	PCDOT	12/31/2003
Agency or Company	CEI	EB/WB Street	Sunrise Drive	
Analysis Period/Year	AM 2015	NB/SB Street	Craycroft Road	
Comment	Analysis 5			

Intersection Data

Area type: Others | Analysis period: 0.25 h | Signal type: Pretimed | % Back of queue: 95

	EB			WB			NB			SB		
	LT	TH	RT	LT	TH	RT	LT	TH	RT	LT	TH	RT
Volume (veh/h)	123	615	381	478	598	9	116	120	88	7	212	90
RTOR volume (veh/h)			0			3			47			23
Peak-hour factor	0.92	0.92	0.92	0.92	0.92	0.92	0.92	0.92	0.92	0.92	0.92	0.92
Heavy vehicles (%)	2	2	2	2	2	2	2	2	2	2	2	2
Start-up lost time, l_1 (s)	2.0	2.0	2.0	2.0	2.0	2.0	2.0	2.0	2.0	2.0	2.0	2.0
Extension of effective green, e (s)	2.0	2.0	2.0	2.0	2.0	2.0	2.0	2.0	2.0	2.0	2.0	2.0
Arrival type, AT	4	4	4	4	4		4	4	4	4	4	4
Approach pedestrian volume (p/h)	5			5			5			5		
Approach bicycle volume (bic/h)	2			2			2			2		
Left/right parking (Y or N)	N	/	N	N	/	N	N	/	N	N	/	N

Signal Phasing Plan

L: LT T: TH R: RT P: Peds

	Phase 1	Phase 2	Phase 3	Phase 4	Phase 5	Phase 6	Phase 7	Phase 8
	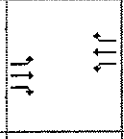	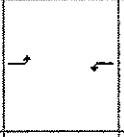	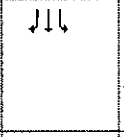	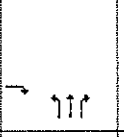				
Green (s)	28.0	11.0	14.0	13.0				
Yellow + All red (s)	6.0	6.0	6.0	6.0				

Cycle (s): 90.0 | Lost time per cycle (s): 24.0 | Critical v/c Ratio: 1.233

Intersection Performance

	EB			WB			NB			SB		
Lane group configuration	L	T	R	L	TR		L	T	R	L	T	R
No. of lanes	1	2	1	1	2		1	1	1	1	1	1
Flow rate (veh/h)	134	668	414	520	660		126	130	96	8	230	98
Capacity (veh/h)	503	1103	699	500	1100		256	269	224	275	290	241
Adjusted saturation flow (veh/h)	1770	3547	1535	1770	3537		1770	1863	1553	1770	1863	1550
v/c ratio	0.266	0.606	0.592	1.039	0.600		0.493	0.485	0.427	0.028	0.795	0.406
g/C ratio	0.500	0.311	0.456	0.500	0.311		0.144	0.144	0.144	0.156	0.156	0.156
Average back of queue (veh)	1.5	8.0	7.6	17.3	7.9		3.2	3.3	2.4	0.2	7.0	2.4
Initial queue in next period (veh)				4.9								
Uniform delay (s)	18.7	26.3	18.3	30.4	26.3		35.5	35.4	35.1	32.2	36.6	34.2
Incremental delay (s)	1.3	2.5	3.7	50.8	2.4		6.7	6.1	5.8	0.2	19.9	5.0
Initial queue delay (s)	0.0	0.0	0.0	0.0	0.0		0.0	0.0	0.0	0.0	0.0	0.0
Delay (s)	15.7	28.2	18.9	74.1	28.0		42.2	41.5	40.9	32.4	56.5	39.2
LOS	B	C	B	E	C		D	D	D	C	E	D
Approach delay (s)/LOS	23.6	/	C	48.3	/	D	41.6	/	D	50.9	/	D
Intersection delay (s)/ LOS	38.1			/			D					

CHAPTER 16 - OPERATIONAL ANALYSIS - SUMMARY WORKSHEET

General Information		Site Information		
Analyst	MDA	Jurisdiction/Date	PCDOT	12/31/2003
Agency or Company	CEI	EB/WB Street	Sunrise Drive	
Analysis Period/Year	PM 2015	NB/SB Street	Craycroft Road	
Comment	Analysis 5			

Intersection Data

Area type: Others Analysis period: 0.25 h Signal type: Pretimed % Back of queue: 95

	EB			WB			NB			SB		
	LT	TH	RT	LT	TH	RT	LT	TH	RT	LT	TH	RT
Volume (veh/h)	166	855	360	177	486	11	336	173	259	16	105	82
RTOR volume (veh/h)			0			3			140			21
Peak-hour factor	0.92	0.92	0.92	0.92	0.92	0.92	0.92	0.92	0.92	0.92	0.92	0.92
Heavy vehicles (%)	2	2	2	2	2	2	2	2	2	2	2	2
Start-up lost time, l_1 (s)	2.0	2.0	2.0	2.0	2.0	2.0	2.0	2.0	2.0	2.0	2.0	2.0
Extension of effective green, e (s)	2.0	2.0	2.0	2.0	2.0	2.0	2.0	2.0	2.0	2.0	2.0	2.0
Arrival type, AT	4	4	4	4	4		4	4	4	4	4	4
Approach pedestrian volume (p/h)	5			5			5			5		
Approach bicycle volume (bic/h)	2			2			2			2		
Left/right parking (Y or N)	N	/	N	N	/	N	N	/	N	N	/	N

Signal Phasing Plan

L: LT T: TH R: RT P: Peds

	Phase 1	Phase 2	Phase 3	Phase 4	Phase 5	Phase 6	Phase 7	Phase 8
Green (s)	27.0	5.0	13.0	21.0				
Yellow + All red (s)	6.0	6.0	6.0	6.0				

Cycle (s): 90.0 Lost time per cycle (s): 24.0 Critical v/c Ratio: 0.925

Intersection Performance

	EB			WB			NB			SB		
Lane group configuration	L	T	R	L	TR		L	T	R	L	T	R
No. of lanes	1	2	1	1	2		1	1	1	1	1	1
Flow rate (veh/h)	180	929	391	192	540		365	188	282	17	114	89
Capacity (veh/h)	424	1064	819	299	1060		413	435	362	256	269	224
Adjusted saturation flow (veh/h)	1770	3547	1535	1770	3532		1770	1863	1553	1770	1863	1550
v/c ratio	0.426	0.873	0.478	0.643	0.510		0.884	0.433	0.777	0.068	0.424	0.398
g/C ratio	0.422	0.300	0.533	0.422	0.300		0.233	0.233	0.233	0.144	0.144	0.144
Average back of queue (veh)	2.8	15.0	5.2	3.7	6.1		11.8	4.2	8.1	0.4	2.8	2.2
Initial queue in next period (veh)												
Uniform delay (s)	22.8	29.9	13.2	33.6	26.0		33.3	29.4	32.3	33.3	35.1	34.9
Incremental delay (s)	3.1	9.9	2.0	10.2	1.8		23.1	3.1	15.1	0.5	4.8	5.2
Initial queue delay (s)	0.0	0.0	0.0	0.0	0.0		0.0	0.0	0.0	0.0	0.0	0.0
Delay (s)	23.0	39.4	11.4	39.4	27.5		56.4	32.5	47.4	33.8	39.9	40.1
LOS	C	D	B	D	C		E	C	D	C	D	D
Approach delay (s)/LOS	30.1	/	C	30.6	/	C	48.0	/	D	39.5	/	D
Intersection delay (s)/ LOS	35.4					/			D			

CHAPTER 16 - OPERATIONAL ANALYSIS - SUMMARY WORKSHEET

General Information		Site Information		
Analyst	MDA	Jurisdiction/Date	PCDOT	12/31/2003
Agency or Company	CEI	EB/WB Street	Sunrise Drive	
Analysis Period/Year	AM 2020	NB/SB Street	Craycroft Road	
Comment	Analysis 6			

Intersection Data

Area type: Others Analysis period: 0.25 h Signal type: Pretimed % Back of queue: 95

	EB			WB			NB			SB		
	LT	TH	RT	LT	TH	RT	LT	TH	RT	LT	TH	RT
Volume (veh/h)	136	679	420	515	645	9	123	127	92	7	220	76
RTOR volume (veh/h)			0			3			50			41
Peak-hour factor	0.92	0.92	0.92	0.92	0.92	0.92	0.92	0.92	0.92	0.92	0.92	0.92
Heavy vehicles (%)	2	2	2	2	2	2	2	2	2	2	2	2
Start-up lost time, l_1 (s)	2.0	2.0	2.0	2.0	2.0	2.0	2.0	2.0	2.0	2.0	2.0	2.0
Extension of effective green, e (s)	2.0	2.0	2.0	2.0	2.0	2.0	2.0	2.0	2.0	2.0	2.0	2.0
Arrival type, AT	4	4	4	4	4		4	4	4	4	4	4
Approach pedestrian volume (p/h)	5			5			5			5		
Approach bicycle volume (bic/h)	2			2			2			2		
Left/right parking (Y or N)	N	/	N	N	/	N	N	/	N	N	/	N

Signal Phasing Plan

L: LT T: TH R: RT P: Peds

	Phase 1	Phase 2	Phase 3	Phase 4	Phase 5	Phase 6	Phase 7	Phase 8
Green (s)	28.0	13.0	14.0	11.0				
Yellow + All red (s)	6.0	6.0	6.0	6.0				

Cycle (s): 90.0 Lost time per cycle (s): 24.0 Critical v/c Ratio: 1.329

Intersection Performance

	EB			WB			NB			SB		
Lane group configuration	L	T	R	L	TR		L	T	R	L	T	R
No. of lanes	1	2	1	1 2	2		1	1	1	1	1	1
Flow rate (veh/h)	148	738	457	560	711		134	138	100	8	239	83
Capacity (veh/h)	523	1103	665	513	1101		216	228	190	275	290	241
Adjusted saturation flow (veh/h)	1770	3547	1535	1770	3538		1770	1863	1553	1770	1863	1550
v/c ratio	0.283	0.669	0.686	1.092	0.646		0.618	0.606	0.527	0.028	0.825	0.343
g/C ratio	0.522	0.311	0.433	0.522	0.311		0.122	0.122	0.122	0.156	0.156	0.156
Average back of queue (veh)	1.6	9.3	9.7	20.4	8.8		3.7	3.8	2.7	0.2	7.5	2.0
Initial queue in next period (veh)				11.8								
Uniform delay (s)	19.0	27.0	20.6	30.5	26.7		37.5	37.4	37.1	32.2	36.8	33.9
Incremental delay (s)	1.4	3.2	5.7	67.0	2.9		12.6	11.4	10.1	0.2	22.8	3.8
Initial queue delay (s)	0.0	0.0	0.0	0.0	0.0		0.0	0.0	0.0	0.0	0.0	0.0
Delay (s)	15.3	29.5	23.3	89.3	29.0		50.1	48.8	47.2	32.4	59.6	37.7
LOS	B	C	C	F	C		D	D	D	C	E	D
Approach delay (s)/LOS	25.9	/	C	55.6	/	E	48.8	/	D	53.5	/	D
Intersection delay (s)/ LOS	42.6					/				D		

CHAPTER 16 - OPERATIONAL ANALYSIS - SUMMARY WORKSHEET

General Information		Site Information		
Analyst	MDA	Jurisdiction/Date	PCDOT	12/31/2003
Agency or Company	CEI	EB/WB Street	Sunrise Drive	
Analysis Period/Year	PM 2020	NB/SB Street	Craycroft Road	
Comment	Analysis 6			

Intersection Data

Area type: Others Analysis period: 0.25 h Signal type: Pretimed % Back of queue: 95

	EB			WB			NB			SB		
	LT	TH	RT	LT	TH	RT	LT	TH	RT	LT	TH	RT
Volume (veh/h)	175	904	379	183	506	12	349	180	270	16	110	70
RTOR volume (veh/h)			0			3			146			38
Peak-hour factor	0.92	0.92	0.92	0.92	0.92	0.92	0.92	0.92	0.92	0.92	0.92	0.92
Heavy vehicles (%)	2	2	2	2	2	2	2	2	2	2	2	2
Start-up lost time, l_1 (s)	2.0	2.0	2.0	2.0	2.0	2.0	2.0	2.0	2.0	2.0	2.0	2.0
Extension of effective green, e (s)	2.0	2.0	2.0	2.0	2.0	2.0	2.0	2.0	2.0	2.0	2.0	2.0
Arrival type, AT	4	4	4	4	4		4	4	4	4	4	4
Approach pedestrian volume (p/h)	5			5			5			5		
Approach bicycle volume (bic/h)	2			2			2			2		
Left/right parking (Y or N)	N	/	N	N	/	N	N	/	N	N	/	N

Signal Phasing Plan

L: LT T: TH R: RT P: Peds

	Phase 1	Phase 2	Phase 3	Phase 4	Phase 5	Phase 6	Phase 7	Phase 8
Green (s)	27.0	5.0	13.0	21.0				
Yellow + All red (s)	6.0	6.0	6.0	6.0				

Cycle (s): 90.0 Lost time per cycle (s): 24.0 Critical v/c Ratio: 0.952

Intersection Performance

	EB			WB			NB			SB		
Lane group configuration	L	T	R	L	TR		L	T	R	L	T	R
No. of lanes	1	2	1	1	2		1	1	1	1	1	1
Flow rate (veh/h)	190	983	412	199	563		379	196	293	17	120	76
Capacity (veh/h)	414	1064	819	299	1060		413	435	362	256	269	224
Adjusted saturation flow (veh/h)	1770	3547	1535	1770	3532		1770	1863	1553	1770	1863	1550
v/c ratio	0.460	0.924	0.503	0.665	0.531		0.919	0.450	0.810	0.068	0.444	0.340
g/C ratio	0.422	0.300	0.533	0.422	0.300		0.233	0.233	0.233	0.144	0.144	0.144
Average back of queue (veh)	3.0	17.1	5.6	3.9	6.5		12.8	4.4	8.7	0.4	3.0	1.8
Initial queue in next period (veh)												
Uniform delay (s)	23.8	30.5	13.4	34.2	26.2		33.7	29.6	32.6	33.3	35.2	34.6
Incremental delay (s)	3.6	14.4	2.2	11.1	1.9		27.9	3.3	17.6	0.5	5.2	4.1
Initial queue delay (s)	0.0	0.0	0.0	0.0	0.0		0.0	0.0	0.0	0.0	0.0	0.0
Delay (s)	24.3	44.5	11.7	40.9	27.8		61.6	32.9	50.2	33.8	40.4	38.7
LOS	C	D	B	D	C		E	C	D	C	D	D
Approach delay (s)/LOS	33.5	/	C	31.2	/	C	51.3	/	D	39.3	/	D
Intersection delay (s)/ LOS	37.9					/				D		

CHAPTER 16 - OPERATIONAL ANALYSIS - SUMMARY WORKSHEET

General Information		Site Information		
Analyst	MDA	Jurisdiction/Date	PCDOT	12/31/2003
Agency or Company	CEI	EB/WB Street	Sunrise Drive	
Analysis Period/Year	AM 2025	NB/SB Street	Craycroft Road	
Comment	Analysis 7			

Intersection Data

Area type: Others Analysis period: 0.25 h Signal type: Pretimed % Back of queue: 95

	EB			WB			NB			SB		
	LT	TH	RT	LT	TH	RT	LT	TH	RT	LT	TH	RT
Volume (veh/h)	149	743	459	552	691	10	129	133	97	7	228	79
RTOR volume (veh/h)			0			3			52			42
Peak-hour factor	0.92	0.92	0.92	0.92	0.92	0.92	0.92	0.92	0.92	0.92	0.92	0.92
Heavy vehicles (%)	2	2	2	2	2	2	2	2	2	2	2	2
Start-up lost time, l_1 (s)	2.0	2.0	2.0	2.0	2.0	2.0	2.0	2.0	2.0	2.0	2.0	2.0
Extension of effective green, e (s)	2.0	2.0	2.0	2.0	2.0	2.0	2.0	2.0	2.0	2.0	2.0	2.0
Arrival type, AT	4	4	4	4	4		4	4	4	4	4	4
Approach pedestrian volume (p/h)	5			5			5			5		
Approach bicycle volume (bic/h)	2			2			2			2		
Left/right parking (Y or N)	N	/	N	N	/	N	N	/	N	N	/	N

Signal Phasing Plan

L: LT T: TH R: RT P: Peds

	Phase 1	Phase 2	Phase 3	Phase 4	Phase 5	Phase 6	Phase 7	Phase 8
Green (s)	28.0	14.0	14.0	10.0				
Yellow + All red (s)	6.0	6.0	6.0	6.0				

Cycle (s): 90.0 Lost time per cycle (s): 18.0 Critical v/c Ratio: 0.916

Intersection Performance

	EB			WB			NB			SB		
Lane group configuration	L	T	R	L	TR		L	T	R	L	T	R
No. of lanes	1	2	1	1	2		1	1	1	1	1	1
Flow rate (veh/h)	162	808	499	600	762		140	145	105	8	248	86
Capacity (veh/h)	524	1103	648	508	1101		197	207	173	275	290	241
Adjusted saturation flow (veh/h)	1770	3547	1535	1770	3538		1770	1863	1553	1770	1863	1550
v/c ratio	0.309	0.732	0.770	1.182	0.692		0.713	0.698	0.611	0.028	0.855	0.356
g/C ratio	0.533	0.311	0.422	0.533	0.311		0.111	0.111	0.111	0.156	0.156	0.156
Average back of queue (veh)	1.7	10.8	12.1	25.8	9.8		4.2	4.2	3.0	0.2	8.0	2.1
Initial queue in next period (veh)				23.1								
Uniform delay (s)	20.2	27.7	22.3	31.0	27.2		38.6	38.5	38.1	32.2	37.0	34.0
Incremental delay (s)	1.5	4.3	8.6	100.7	3.6		19.7	17.8	15.1	0.2	26.2	4.1
Initial queue delay (s)	0.0	0.0	0.0	0.0	0.0		0.0	0.0	0.0	0.0	0.0	0.0
Delay (s)	15.9	31.3	28.0	122.8	30.2		58.3	56.3	53.2	32.4	63.2	38.1
LOS	B	C	C	F	C		E	E	D	C	E	D
Approach delay (s)/LOS	28.5	/	C	71.0	/	E	56.2	/	E	56.2	/	E
Intersection delay (s)/ LOS	50.4					/				D		

CHAPTER 16 - OPERATIONAL ANALYSIS - SUMMARY WORKSHEET

General Information		Site Information		
Analyst	MDA	Jurisdiction/Date	PCDOT	12/31/2003
Agency or Company	CEI	EB/WB Street	Sunrise Drive	
Analysis Period/Year	PM 2025	NB/SB Street	Craycroft Road	
Comment	Analysis 7			

Intersection Data

Area type: Others Analysis period: 0.25 h Signal type: Pretimed % Back of queue: 95

	EB			WB			NB			SB		
	LT	TH	RT	LT	TH	RT	LT	TH	RT	LT	TH	RT
Volume (veh/h)	184	952	399	190	525	12	363	186	281	17	115	73
RTOR volume (veh/h)			0			3			151			40
Peak-hour factor	0.92	0.92	0.92	0.92	0.92	0.92	0.92	0.92	0.92	0.92	0.92	0.92
Heavy vehicles (%)	2	2	2	2	2	2	2	2	2	2	2	2
Start-up lost time, l_1 (s)	2.0	2.0	2.0	2.0	2.0	2.0	2.0	2.0	2.0	2.0	2.0	2.0
Extension of effective green, e (s)	2.0	2.0	2.0	2.0	2.0	2.0	2.0	2.0	2.0	2.0	2.0	2.0
Arrival type, AT	4	4	4	4	4		4	4	4	4	4	4
Approach pedestrian volume (p/h)	5			5			5			5		
Approach bicycle volume (bic/h)	2			2			2			2		
Left/right parking (Y or N)	N	/	N	N	/	N	N	/	N	N	/	N

Signal Phasing Plan

L: LT T: TH R: RT P: Peds

	Phase 1	Phase 2	Phase 3	Phase 4	Phase 5	Phase 6	Phase 7	Phase 8
Green (s)	27.0	5.0	13.0	21.0				
Yellow + All red (s)	6.0	6.0	6.0	6.0				

Cycle (s): 90.0 Lost time per cycle (s): 24.0 Critical v/c Ratio: 0.981

Intersection Performance

	EB			WB			NB			SB		
Lane group configuration	L	T	R	L	TR		L	T	R	L	T	R
No. of lanes	1	2	1	1	2		1	1	1	1	1	1
Flow rate (veh/h)	200	1035	434	207	584		395	202	305	18	125	79
Capacity (veh/h)	405	1064	819	299	1060		413	435	362	256	269	224
Adjusted saturation flow (veh/h)	1770	3547	1535	1770	3532		1770	1863	1553	1770	1863	1550
v/c ratio	0.494	0.973	0.530	0.691	0.551		0.956	0.465	0.843	0.072	0.465	0.354
g/C ratio	0.422	0.300	0.533	0.422	0.300		0.233	0.233	0.233	0.144	0.144	0.144
Average back of queue (veh)	3.3	19.6	6.1	4.1	6.8		14.1	4.6	9.4	0.4	3.2	1.9
Initial queue in next period (veh)												
Uniform delay (s)	24.8	31.1	13.7	34.9	26.4		34.0	29.7	32.9	33.3	35.3	34.7
Incremental delay (s)	4.3	21.7	2.4	12.3	2.1		34.4	3.5	20.7	0.5	5.7	4.3
Initial queue delay (s)	0.0	0.0	0.0	0.0	0.0		0.0	0.0	0.0	0.0	0.0	0.0
Delay (s)	25.9	52.4	12.1	42.7	28.1		68.4	33.2	53.6	33.8	41.0	39.0
LOS	C	D	B	D	C		E	C	D	C	D	D
Approach delay (s)/LOS	38.7	/	D	31.9	/	C	55.5	/	E	39.7	/	D
Intersection delay (s)/ LOS	41.5					/				D		

CHAPTER 16 - OPERATIONAL ANALYSIS - SUMMARY WORKSHEET

General Information		Site Information		
Analyst	MDA	Jurisdiction/Date	PCDOT	12/31/2003
Agency or Company	CEI	EB/WB Street	Sunrise Drive	
Analysis Period/Year	AM 2025	NB/SB Street	Craycroft Road	
Comment	Analysis 8			

Intersection Data

Area type: Others Analysis period: 0.25 h Signal type: Pretimed % Back of queue: 95

	EB			WB			NB			SB		
	LT	TH	RT	LT	TH	RT	LT	TH	RT	LT	TH	RT
Volume (veh/h)	149	743	459	552	691	10	129	133	97	7	228	79
RTOR volume (veh/h)			0			3			52			42
Peak-hour factor	0.92	0.92	0.92	0.92	0.92	0.92	0.92	0.92	0.92	0.92	0.92	0.92
Heavy vehicles (%)	2	2	2	2	2	2	2	2	2	2	2	2
Start-up lost time, l_1 (s)	2.0	2.0	2.0	2.0	2.0	2.0	2.0	2.0	2.0	2.0	2.0	2.0
Extension of effective green, e (s)	2.0	2.0	2.0	2.0	2.0	2.0	2.0	2.0	2.0	2.0	2.0	2.0
Arrival type, AT	4	4	4	4	4		4	4	4	4	4	4
Approach pedestrian volume (p/h)	5			5			5			5		
Approach bicycle volume (bic/h)	2			2			2			2		
Left/right parking (Y or N)	N	/	N	N	/	N	N	/	N	N	/	N

Signal Phasing Plan

L: LT T: TH R: RT P: Peds

	Phase 1	Phase 2	Phase 3	Phase 4	Phase 5	Phase 6	Phase 7	Phase 8
Green (s)	23.0	17.0	15.0	11.0				
Yellow + All red (s)	6.0	6.0	6.0	6.0				

Cycle (s): 90.0 Lost time per cycle (s): 18.0 Critical v/c Ratio: 0.792

Intersection Performance

	EB			WB			NB			SB		
Lane group configuration	L	T	R	L	TR		L	T	R	L	T	R
No. of lanes	1	2	1	2	2		2	1	1	1	1	1
Flow rate (veh/h)	162	808	499	600	762		140	145	105	8	248	86
Capacity (veh/h)	334	906	579	649	904		420	228	190	295	310	258
Adjusted saturation flow (veh/h)	1770	3547	1532	3437	3537		3437	1863	1553	1770	1863	1550
v/c ratio	0.485	0.891	0.862	0.924	0.843		0.334	0.635	0.556	0.026	0.798	0.332
g/C ratio	0.189	0.256	0.378	0.189	0.256		0.122	0.122	0.122	0.167	0.167	0.167
Average back of queue (veh)	3.9	13.6	14.5	10.7	12.1		1.8	4.0	2.9	0.2	7.5	2.0
Initial queue in next period (veh)												
Uniform delay (s)	32.6	32.3	25.8	35.9	31.8		36.1	37.6	37.2	31.4	36.0	33.1
Incremental delay (s)	5.0	12.9	15.5	21.0	9.4		2.1	12.8	11.2	0.2	19.0	3.4
Initial queue delay (s)	0.0	0.0	0.0	0.0	0.0		0.0	0.0	0.0	0.0	0.0	0.0
Delay (s)	37.6	45.2	39.2	56.9	41.2		38.2	50.4	48.4	31.6	55.0	36.5
LOS	D	D	D	E	D		D	D	D	C	D	D
Approach delay (s)/LOS	42.3	/	D	48.1	/	D	45.5	/	D	49.9	/	D
Intersection delay (s)/ LOS	45.6					/				D		

CHAPTER 16 - OPERATIONAL ANALYSIS - SUMMARY WORKSHEET

General Information		Site Information		
Analyst	MDA	Jurisdiction/Date	PCDOT	12/31/2003
Agency or Company	CEI	EB/WB Street	Sunrise Drive	
Analysis Period/Year	PM 2025	NB/SB Street	Craycroft Road	
Comment	Analysis 8			

Intersection Data

Area type: Others Analysis period: 0.25 h Signal type: Pretimed % Back of queue: 95

	EB			WB			NB			SB		
	LT	TH	RT	LT	TH	RT	LT	TH	RT	LT	TH	RT
Volume (veh/h)	184	952	399	190	525	12	363	186	281	17	115	73
RTOR volume (veh/h)			0			3			151			40
Peak-hour factor	0.92	0.92	0.92	0.92	0.92	0.92	0.92	0.92	0.92	0.92	0.92	0.92
Heavy vehicles (%)	2	2	2	2	2	2	2	2	2	2	2	2
Start-up lost time, l_1 (s)	2.0	2.0	2.0	2.0	2.0	2.0	2.0	2.0	2.0	2.0	2.0	2.0
Extension of effective green, e (s)	2.0	2.0	2.0	2.0	2.0	2.0	2.0	2.0	2.0	2.0	2.0	2.0
Arrival type, AT	4	4	4	4	4		4	4	4	4	4	4
Approach pedestrian volume (p/h)	5			5			5			5		
Approach bicycle volume (bic/h)	2			2			2			2		
Left/right parking (Y or N)	N	/	N	N	/	N	N	/	N	N	/	N

Signal Phasing Plan

L: LT T: TH R: RT P: Peds

	Phase 1	Phase 2	Phase 3	Phase 4	Phase 5	Phase 6	Phase 7	Phase 8
Green (s)	25.5	13.5	9.0	18.0				
Yellow + All red (s)	6.0	6.0	6.0	6.0				

Cycle (s): 90.0 Lost time per cycle (s): 24.0 Critical v/c Ratio: 1.029

Intersection Performance

	EB			WB			NB			SB		
Lane group configuration	L	T	R	L	TR		L	T	R	L	T	R
No. of lanes	1	2	1	2	2		2	1	1	1	1	1
Flow rate (veh/h)	200	1035	434	207	584		395	202	305	18	125	79
Capacity (veh/h)	265	1005	741	515	1001		687	373	311	177	186	155
Adjusted saturation flow (veh/h)	1770	3547	1534	3437	3532		3437	1863	1553	1770	1863	1550
v/c ratio	0.753	1.030	0.585	0.401	0.583		0.574	0.543	0.984	0.104	0.671	0.512
g/C ratio	0.150	0.283	0.483	0.150	0.283		0.200	0.200	0.200	0.100	0.100	0.100
Average back of queue (veh)	5.9	21.8	7.5	2.6	7.1		5.1	5.0	11.7	0.4	3.6	2.2
Initial queue in next period (veh)		3.9										
Uniform delay (s)	36.7	32.3	16.7	34.6	27.7		32.5	32.3	35.9	36.8	39.1	38.4
Incremental delay (s)	17.9	36.3	3.4	2.3	2.5		3.5	5.6	47.1	1.2	17.6	11.6
Initial queue delay (s)	0.0	0.0	0.0	0.0	0.0		0.0	0.0	0.0	0.0	0.0	0.0
Delay (s)	54.6	68.5	16.7	36.9	30.1		36.0	37.9	83.0	38.0	56.7	50.0
LOS	D	E	B	D	C		D	D	F	D	E	D
Approach delay (s)/LOS	53.4	/	D	31.9	/	C	52.3	/	D	52.8	/	D
Intersection delay (s)/ LOS	48.3				/					D		

CHAPTER 16 - OPERATIONAL ANALYSIS - SUMMARY WORKSHEET

General Information		Site Information		
Analyst	MDA	Jurisdiction/Date	PCDOT	12/31/2003
Agency or Company	CEI	EB/WB Street	Sunrise Drive	
Analysis Period/Year	AM 2003	NB/SB Street	Kolb Road	
Comment	Analysis 9			

Intersection Data

Area type: Others Analysis period: 0.25 h Signal type: Pretimed % Back of queue: 95

	EB			WB			NB			SB		
	LT	TH	RT	LT	TH	RT	LT	TH	RT	LT	TH	RT
Volume (veh/h)	158	193	75	57	384	126	46	137	139	30	131	85
RTOR volume (veh/h)			41			31			35			46
Peak-hour factor	0.92	0.92	0.92	0.92	0.92	0.92	0.92	0.92	0.92	0.92	0.92	0.92
Heavy vehicles (%)	2	2	2	2	2	2	2	2	2	2	2	2
Start-up lost time, l_1 (s)	2.0	2.0	2.0	2.0	2.0	2.0	2.0	2.0	2.0	2.0	2.0	2.0
Extension of effective green, e (s)	2.0	2.0	2.0	2.0	2.0	2.0	2.0	2.0	2.0	2.0	2.0	2.0
Arrival type, AT	4	4	4	4	4		4	4		4	4	4
Approach pedestrian volume (p/h)	5			5			5			5		
Approach bicycle volume (bic/h)	2			2			2			2		
Left/right parking (Y or N)	N	/	N	N	/	N	N	/	N	N	/	N

Signal Phasing Plan

L: LT T: TH R: RT P: Peds

	Phase 1	Phase 2	Phase 3	Phase 4	Phase 5	Phase 6	Phase 7	Phase 8
	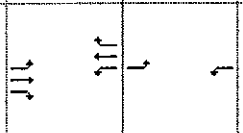							
Green (s)	30.0	6.0	24.0	6.0				
Yellow + All red (s)	6.0	6.0	6.0	6.0				

Cycle (s): 90.0 Lost time per cycle (s): 24.0 Critical v/c Ratio: 0.756

Intersection Performance

	EB			WB			NB			SB		
Lane group configuration	L	T	R	L	TR		L	TR		L	T	R
No. of lanes	1	1	1	1	1		1	1		1	1	1
Flow rate (veh/h)	172	210	82	62	554		50	300		33	142	92
Capacity (veh/h)	329	621	512	612	594		565	452		445	497	409
Adjusted saturation flow (veh/h)	1770	1863	1537	1770	1781		1770	1694		1770	1863	1533
v/c ratio	0.522	0.338	0.159	0.101	0.934		0.088	0.664		0.073	0.287	0.226
g/C ratio	0.467	0.333	0.333	0.467	0.333		0.400	0.267		0.400	0.267	0.267
Average back of queue (veh)	2.7	3.8	1.4	0.7	18.5		0.7	7.5		0.4	2.8	1.8
Initial queue in next period (veh)												
Uniform delay (s)	31.6	22.5	21.1	14.0	29.0		16.9	29.4		20.9	26.2	25.8
Incremental delay (s)	5.8	1.5	0.7	0.3	23.8		0.3	7.5		0.3	1.4	1.3
Initial queue delay (s)	0.0	0.0	0.0	0.0	0.0		0.0	0.0		0.0	0.0	0.0
Delay (s)	31.6	23.1	20.9	11.7	51.6		15.4	36.9		19.0	27.6	27.1
LOS	C	C	C	B	D		B	D		B	C	C
Approach delay (s)/LOS	25.9	/	C	47.6	/	D	33.8	/	C	26.4	/	C
Intersection delay (s)/ LOS	35.5				/					D		

CHAPTER 16 - OPERATIONAL ANALYSIS - SUMMARY WORKSHEET

General Information		Site Information		
Analyst	MDA	Jurisdiction/Date	PCDOT	12/31/2003
Agency or Company	CEI	EB/WB Street	Sunrise Drive	
Analysis Period/Year	PM 2003	NB/SB Street	Kolb Road	
Comment	Analysis 9			

Intersection Data

Area type: Others Analysis period: 0.25 h Signal type: Pretimed % Back of queue: 95

	EB			WB			NB			SB		
	LT	TH	RT	LT	TH	RT	LT	TH	RT	LT	TH	RT
Volume (veh/h)	244	282	116	53	253	83	114	183	163	57	187	86
RTOR volume (veh/h)			63			21			41			47
Peak-hour factor	0.92	0.92	0.92	0.92	0.92	0.92	0.92	0.92	0.92	0.92	0.92	0.92
Heavy vehicles (%)	2	2	2	2	2	2	2	2	2	2	2	2
Start-up lost time, l_1 (s)	2.0	2.0	2.0	2.0	2.0	2.0	2.0	2.0	2.0	2.0	2.0	2.0
Extension of effective green, e (s)	2.0	2.0	2.0	2.0	2.0	2.0	2.0	2.0	2.0	2.0	2.0	2.0
Arrival type, AT	4	4	4	4	4		4	4		4	4	4
Approach pedestrian volume (p/h)	5			5			5			5		
Approach bicycle volume (bic/h)	2			2			2			2		
Left/right parking (Y or N)	N	/	N	N	/	N	N	/	N	N	/	N

Signal Phasing Plan

L: LT T: TH R: RT P: Peds

	Phase 1	Phase 2	Phase 3	Phase 4	Phase 5	Phase 6	Phase 7	Phase 8
	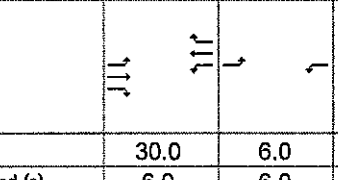							
Green (s)	30.0	6.0	24.0	6.0				
Yellow + All red (s)	6.0	6.0	6.0	6.0				

Cycle (s): 90.0 Lost time per cycle (s): 24.0 Critical v/c Ratio: 0.768

Intersection Performance

	EB			WB			NB			SB		
Lane group configuration	L	T	R	L	TR		L	TR		L	T	R
No. of lanes	1	1	1	1	1		1	1		1	1	1
Flow rate (veh/h)	265	307	126	58	365		124	376		62	203	93
Capacity (veh/h)	484	621	512	532	594		526	455		383	497	409
Adjusted saturation flow (veh/h)	1770	1863	1537	1770	1781		1770	1705		1770	1863	1533
v/c ratio	0.548	0.494	0.246	0.108	0.615		0.236	0.827		0.162	0.409	0.229
g/C ratio	0.467	0.333	0.333	0.467	0.333		0.400	0.267		0.400	0.267	0.267
Average back of queue (veh)	4.1	6.2	2.2	0.6	8.2		1.8	11.1		0.9	4.3	1.8
Initial queue in next period (veh)												
Uniform delay (s)	23.5	23.9	21.8	16.5	25.2		19.3	31.0		24.9	27.2	25.8
Incremental delay (s)	4.4	2.8	1.1	0.4	4.7		1.1	15.8		0.9	2.5	1.3
Initial queue delay (s)	0.0	0.0	0.0	0.0	0.0		0.0	0.0		0.0	0.0	0.0
Delay (s)	23.6	25.7	22.0	13.9	28.8		18.4	46.8		23.1	29.7	27.1
LOS	C	C	C	B	C		B	D		C	C	C
Approach delay (s)/LOS	24.2	/	C	26.8	/	C	39.8	/	D	27.9	/	C
Intersection delay (s)/ LOS	29.4					/				C		

CHAPTER 16 - OPERATIONAL ANALYSIS - SUMMARY WORKSHEET

General Information		***Site Information***		
Analyst	MDA	Jurisdiction/Date	PCDOT	12/31/2003
Agency or Company	CEI	EB/WB Street	Sunrise Drive	
Analysis Period/Year	AM 2005	NB/SB Street	Kolb Road	
Comment	Analysis 10			

Intersection Data

Area type Others Analysis period 0.25 h Signal type Pretimed % Back of queue 95

	EB			WB			NB			SB		
	LT	TH	RT	LT	TH	RT	LT	TH	RT	LT	TH	RT
Volume (veh/h)	170	207	81	62	414	135	55	161	165	31	134	87
RTOR volume (veh/h)			44			34			41			47
Peak-hour factor	0.92	0.92	0.92	0.92	0.92	0.92	0.92	0.92	0.92	0.92	0.92	0.92
Heavy vehicles (%)	2	2	2	2	2	2	2	2	2	2	2	2
Start-up lost time, l_1 (s)	2.0	2.0	2.0	2.0	2.0	2.0	2.0	2.0	2.0	2.0	2.0	2.0
Extension of effective green, e (s)	2.0	2.0	2.0	2.0	2.0	2.0	2.0	2.0	2.0	2.0	2.0	2.0
Arrival type, AT	4	4	4	4	4		4	4		4	4	4
Approach pedestrian volume (p/h)	5			5			5			5		
Approach bicycle volume (bic/h)	2			2			2			2		
Left/right parking (Y or N)	N	/	N	N	/	N	N	/	N	N	/	N

Signal Phasing Plan

L: LT T: TH R: RT P: Peds

	Phase 1	Phase 2	Phase 3	Phase 4	Phase 5	Phase 6	Phase 7	Phase 8
	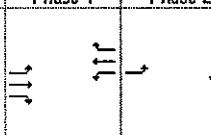							
Green (s)	32.0	6.0	22.0	6.0				
Yellow + All red (s)	6.0	6.0	6.0	6.0				

Cycle (s) 90.0 Lost time per cycle (s) 24.0 Critical v/c Ratio 0.843

Intersection Performance

	EB			WB			NB			SB		
Lane group configuration	L	T	R	L	TR		L	TR		L	T	R
No. of lanes	1	1	1	1	1		1	1		1	1	1
Flow rate (veh/h)	185	225	88	67	597		60	354		34	146	95
Capacity (veh/h)	326	662	547	630	633		537	414		370	455	375
Adjusted saturation flow (veh/h)	1770	1863	1537	1770	1781		1770	1693		1770	1863	1532
v/c ratio	0.567	0.340	0.161	0.107	0.942		0.111	0.856		0.091	0.320	0.252
g/C ratio	0.489	0.356	0.356	0.489	0.356		0.378	0.244		0.378	0.244	0.244
Average back of queue (veh)	2.8	4.0	1.4	0.7	20.1		0.8	11.0		0.5	3.0	1.9
Initial queue in next period (veh)												
Uniform delay (s)	32.2	21.3	19.8	13.1	28.1		18.3	32.5		25.2	27.9	27.4
Incremental delay (s)	7.0	1.4	0.6	0.3	24.1		0.4	19.8		0.5	1.8	1.6
Initial queue delay (s)	0.0	0.0	0.0	0.0	0.0		0.0	0.0		0.0	0.0	0.0
Delay (s)	32.2	21.4	19.2	10.6	50.5		17.2	52.3		23.6	29.7	29.0
LOS	C	C	B	B	D		B	D		C	C	C
Approach delay (s)/LOS	25.0	/	C	46.4	/	D	47.2	/	D	28.7	/	C
Intersection delay (s)/ LOS	38.2					/				D		

CHAPTER 16 - OPERATIONAL ANALYSIS - SUMMARY WORKSHEET

General Information		Site Information		
Analyst	MDA	Jurisdiction/Date	PCDOT	12/31/2003
Agency or Company	CEI	EB/WB Street	Sunrise Drive	
Analysis Period/Year	PM 2005	NB/SB Street	Kolb Road	
Comment	Analysis 10			

Intersection Data

Area type: Others Analysis period: 0.25 h Signal type: Pretimed % Back of queue: 95

	EB			WB			NB			SB		
	LT	TH	RT	LT	TH	RT	LT	TH	RT	LT	TH	RT
Volume (veh/h)	263	303	125	58	277	90	123	197	175	59	194	89
RTOR volume (veh/h)			67			23			44			48
Peak-hour factor	0.92	0.92	0.92	0.92	0.92	0.92	0.92	0.92	0.92	0.92	0.92	0.92
Heavy vehicles (%)	2	2	2	2	2	2	2	2	2	2	2	2
Start-up lost time, l_1 (s)	2.0	2.0	2.0	2.0	2.0	2.0	2.0	2.0	2.0	2.0	2.0	2.0
Extension of effective green, e (s)	2.0	2.0	2.0	2.0	2.0	2.0	2.0	2.0	2.0	2.0	2.0	2.0
Arrival type, AT	4	4	4	4	4		4	4		4	4	4
Approach pedestrian volume (p/h)	5			5			5			5		
Approach bicycle volume (bic/h)	2			2			2			2		
Left/right parking (Y or N)	N	/	N	N	/	N	N	/	N	N	/	N

Signal Phasing Plan

L: LT T: TH R: RT P: Peds

	Phase 1	Phase 2	Phase 3	Phase 4	Phase 5	Phase 6	Phase 7	Phase 8
	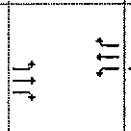	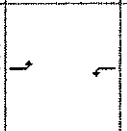	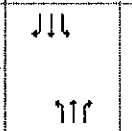	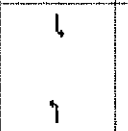				
Green (s)	30.0	6.0	24.0	6.0				
Yellow + All red (s)	6.0	6.0	6.0	6.0				

Cycle (s): 90.0 Lost time per cycle (s): 24.0 Critical v/c Ratio: 0.828

Intersection Performance

	EB			WB			NB			SB		
Lane group configuration	L	T	R	L	TR		L	TR		L	T	R
No. of lanes	1	1	1	1	1		1	1		1	1	1
Flow rate (veh/h)	286	329	136	63	399		134	404		64	211	97
Capacity (veh/h)	457	621	512	513	594		519	455		360	497	409
Adjusted saturation flow (veh/h)	1770	1863	1537	1770	1781		1770	1705		1770	1863	1533
v/c ratio	0.626	0.530	0.265	0.123	0.672		0.257	0.889		0.178	0.425	0.237
g/C ratio	0.467	0.333	0.333	0.467	0.333		0.400	0.267		0.400	0.267	0.267
Average back of queue (veh)	4.8	6.9	2.4	0.7	9.4		1.9	12.9		0.9	4.5	1.9
Initial queue in next period (veh)												
Uniform delay (s)	26.0	24.3	21.9	17.3	25.8		19.7	31.7		26.4	27.3	25.8
Incremental delay (s)	6.4	3.2	1.3	0.5	6.0		1.2	22.0		1.1	2.6	1.4
Initial queue delay (s)	0.0	0.0	0.0	0.0	0.0		0.0	0.0		0.0	0.0	0.0
Delay (s)	27.6	26.5	22.3	14.6	30.7		18.8	53.7		24.7	29.9	27.2
LOS	C	C	C	B	C		B	D		C	C	C
Approach delay (s)/LOS	26.2	/	C	28.5	/	C	45.1	/	D	28.3	/	C
Intersection delay (s)/ LOS	31.8					/				C		

CHAPTER 16 - OPERATIONAL ANALYSIS - SUMMARY WORKSHEET

General Information

Analyst	MDA		
Agency or Company	CEI		
Analysis Period/Year	AM	2010	
Comment	Analysis 11		

Site Information

Jurisdiction/Date	PCDOT	12/31/2003
EB/WB Street	Sunrise Drive	
NB/SB Street	Kolb Road	

Intersection Data

Area type: Others Analysis period: 0.25 h Signal type: Pretimed % Back of queue: 95

	EB			WB			NB			SB		
	LT	TH	RT	LT	TH	RT	LT	TH	RT	LT	TH	RT
Volume (veh/h)	187	227	90	71	460	150	68	198	208	32	140	91
RTOR volume (veh/h)			48			38			46			49
Peak-hour factor	0.92	0.92	0.92	0.92	0.92	0.92	0.92	0.92	0.92	0.92	0.92	0.92
Heavy vehicles (%)	2	2	2	2	2	2	2	2	2	2	2	2
Start-up lost time, l_1 (s)	2.0	2.0	2.0	2.0	2.0	2.0	2.0	2.0	2.0	2.0	2.0	2.0
Extension of effective green, e (s)	2.0	2.0	2.0	2.0	2.0	2.0	2.0	2.0	2.0	2.0	2.0	2.0
Arrival type, AT	4	4	4	4	4		4	4		4	4	4
Approach pedestrian volume (p/h)	5			5			5			5		
Approach bicycle volume (bic/h)	2			2			2			2		
Left/right parking (Y or N)	N	/	N	N	/	N	N	/	N	N	/	N

Signal Phasing Plan

L: LT T: TH R: RT P: Peds

	Phase 1	Phase 2	Phase 3	Phase 4	Phase 5	Phase 6	Phase 7	Phase 8
Green (s)	31.0	5.0	25.0	5.0				
Yellow + All red (s)	6.0	6.0	6.0	6.0				

Cycle (s): 90.0 Lost time per cycle (s): 24.0 Critical v/c Ratio: 0.956

Intersection Performance

	EB			WB			NB			SB		
Lane group configuration	L	T	R	L	TR		L	TR		L	T	R
No. of lanes	1	1	1	1	1		1	1		1	1	1
Flow rate (veh/h)	203	247	98	77	663		74	441		35	152	99
Capacity (veh/h)	299	642	529	577	614		556	470		325	517	426
Adjusted saturation flow (veh/h)	1770	1863	1537	1770	1781		1770	1692		1770	1863	1534
v/c ratio	0.680	0.385	0.185	0.134	1.081		0.133	0.939		0.107	0.294	0.232
g/C ratio	0.467	0.344	0.344	0.467	0.344		0.400	0.278		0.400	0.278	0.278
Average back of queue (veh)	3.7	4.6	1.6	0.9	28.9		1.0	15.2		0.5	3.0	1.9
Initial queue in next period (veh)					12.4							
Uniform delay (s)	35.6	22.3	20.7	15.0	29.5		17.2	31.8		27.2	25.6	25.1
Incremental delay (s)	11.8	1.7	0.8	0.5	60.1		0.5	28.8		0.7	1.4	1.3
Initial queue delay (s)	0.0	0.0	0.0	0.0	0.0		0.0	0.0		0.0	0.0	0.0
Delay (s)	40.8	22.9	20.4	12.7	88.1		15.9	60.6		25.0	27.0	26.4
LOS	D	C	C	B	F		B	E		C	C	C
Approach delay (s)/LOS	29.1	/	C	80.2	/	F	54.2	/	D	26.5	/	C
Intersection delay (s)/ LOS	53.0					/				D		

CHAPTER 16 - OPERATIONAL ANALYSIS - SUMMARY WORKSHEET

General Information		***Site Information***		
Analyst	MDA	Jurisdiction/Date	PCDOT	12/31/2003
Agency or Company	CEI	EB/WB Street	Sunrise Drive	
Analysis Period/Year	PM 2010	NB/SB Street	Kolb Road	
Comment	Analysis 11			

Intersection Data

Area type: Others Analysis period: 0.25 h Signal type: Pretimed % Back of queue: 95

	EB			WB			NB			SB		
	LT	TH	RT	LT	TH	RT	LT	TH	RT	LT	TH	RT
Volume (veh/h)	292	336	137	66	313	102	136	218	194	62	205	94
RTOR volume (veh/h)			74			25			48			50
Peak-hour factor	0.92	0.92	0.92	0.92	0.92	0.92	0.92	0.92	0.92	0.92	0.92	0.92
Heavy vehicles (%)	2	2	2	2	2	2	2	2	2	2	2	2
Start-up lost time, l_1 (s)	2.0	2.0	2.0	2.0	2.0	2.0	2.0	2.0	2.0	2.0	2.0	2.0
Extension of effective green, e (s)	2.0	2.0	2.0	2.0	2.0	2.0	2.0	2.0	2.0	2.0	2.0	2.0
Arrival type, AT	4	4	4	4	4		4	4		4	4	4
Approach pedestrian volume (p/h)	5			5			5			5		
Approach bicycle volume (bic/h)	2			2			2			2		
Left/right parking (Y or N)	N	/	N	N	/	N	N	/	N	N	/	N

Signal Phasing Plan

L: LT T: TH R: RT P: Peds

	Phase 1	Phase 2	Phase 3	Phase 4	Phase 5	Phase 6	Phase 7	Phase 8
Green (s)	30.0	5.0	26.0	5.0				
Yellow + All red (s)	6.0	6.0	6.0	6.0				

Cycle (s): 90.0 Lost time per cycle (s): 24.0 Critical v/c Ratio: 0.920

Intersection Performance

	EB			WB			NB			SB		
Lane group configuration	L	T	R	L	TR		L	TR		L	T	R
No. of lanes	1	1	1	1	1		1	1		1	1	1
Flow rate (veh/h)	317	365	149	72	451		148	448		67	223	102
Capacity (veh/h)	395	621	512	464	594		520	493		335	538	443
Adjusted saturation flow (veh/h)	1770	1863	1537	1770	1781		1770	1706		1770	1863	1534
v/c ratio	0.804	0.588	0.291	0.154	0.760		0.284	0.909		0.201	0.414	0.231
g/C ratio	0.456	0.333	0.333	0.456	0.333		0.411	0.289		0.411	0.289	0.289
Average back of queue (veh)	6.7	8.0	2.7	0.8	11.7		2.1	14.6		0.9	4.6	1.9
Initial queue in next period (veh)												
Uniform delay (s)	30.8	24.9	22.1	19.4	26.8		19.4	30.9		27.4	25.8	24.4
Incremental delay (s)	15.9	4.1	1.4	0.7	8.9		1.4	23.2		1.3	2.3	1.2
Initial queue delay (s)	0.0	0.0	0.0	0.0	0.0		0.0	0.0		0.0	0.0	0.0
Delay (s)	41.5	27.9	22.6	16.8	34.6		18.5	53.9		25.4	28.0	25.4
LOS	D	C	C	B	C		B	D		C	C	C
Approach delay (s)/LOS	32.2	/	C	32.1	/	C	45.1	/	D	26.9	/	C
Intersection delay (s)/ LOS	34.6					/				C		

CHAPTER 16 - OPERATIONAL ANALYSIS - SUMMARY WORKSHEET

General Information		Site Information		
Analyst	MDA	Jurisdiction/Date	PCDOT	12/31/2003
Agency or Company	CEI	EB/WB Street	Sunrise Drive	
Analysis Period/Year	AM 2015	NB/SB Street	Kolb Road	
Comment	Analysis 12			

Intersection Data

Area type: Others Analysis period: 0.25 h Signal type: Pretimed % Back of queue: 95

	EB			WB			NB			SB		
	LT	TH	RT	LT	TH	RT	LT	TH	RT	LT	TH	RT
Volume (veh/h)	199	241	95	76	490	160	76	222	229	32	143	93
RTOR volume (veh/h)			51			40			57			50
Peak-hour factor	0.92	0.92	0.92	0.92	0.92	0.92	0.92	0.92	0.92	0.92	0.92	0.92
Heavy vehicles (%)	2	2	2	2	2	2	2	2	2	2	2	2
Start-up lost time, l_1 (s)	2.0	2.0	2.0	2.0	2.0	2.0	2.0	2.0	2.0	2.0	2.0	2.0
Extension of effective green, e (s)	2.0	2.0	2.0	2.0	2.0	2.0	2.0	2.0	2.0	2.0	2.0	2.0
Arrival type, AT	4	4	4	4	4		4	4		4	4	4
Approach pedestrian volume (p/h)	5			5			5			5		
Approach bicycle volume (bic/h)	2			2			2			2		
Left/right parking (Y or N)	N	/	N	N	/	N	N	/	N	N	/	N

Signal Phasing Plan

L: LT T: TH R: RT P: Peds

	Phase 1	Phase 2	Phase 3	Phase 4	Phase 5	Phase 6	Phase 7	Phase 8
Green (s)	30.0	5.0	26.0	5.0				
Yellow + All red (s)	6.0	6.0	6.0	6.0				

Cycle (s): 90.0 Lost time per cycle (s): 24.0 Critical v/c Ratio: 1.039

Intersection Performance

	EB			WB			NB			SB		
Lane group configuration	L	T	R	L	TR		L	TR		L	T	R
No. of lanes	1	1	1	1	1		1	1		1	1	1
Flow rate (veh/h)	216	262	103	83	707		83	490		35	155	101
Capacity (veh/h)	299	621	512	549	594		569	489		300	538	443
Adjusted saturation flow (veh/h)	1770	1863	1537	1770	1781		1770	1694		1770	1863	1534
v/c ratio	0.723	0.422	0.202	0.150	1.190		0.145	1.002		0.116	0.289	0.228
g/C ratio	0.456	0.333	0.333	0.456	0.333		0.411	0.289		0.411	0.289	0.289
Average back of queue (veh)	4.3	5.1	1.8	1.0	36.9		1.1	18.8		0.5	3.0	1.9
Initial queue in next period (veh)					28.2			0.2				
Uniform delay (s)	39.5	23.3	21.4	16.2	30.0		16.7	32.0		28.9	24.8	24.4
Incremental delay (s)	14.1	2.1	0.9	0.6	101.6		0.5	41.1		0.8	1.4	1.2
Initial queue delay (s)	0.0	0.0	0.0	0.0	0.0		0.0	0.0		0.0	0.0	0.0
Delay (s)	46.9	24.4	21.5	14.1	130.4		15.3	72.9		26.3	26.1	25.4
LOS	D	C	C	B	F		B	E		C	C	C
Approach delay (s)/LOS	32.2	/	C	118.2	/	F	64.6	/	E	25.9	/	C
Intersection delay (s)/ LOS	70.1				/					E		

CHAPTER 16 - OPERATIONAL ANALYSIS - SUMMARY WORKSHEET

General Information		***Site Information***		
Analyst	MDA	Jurisdiction/Date	PCDOT	12/31/2003
Agency or Company	CEI	EB/WB Street	Sunrise Drive	
Analysis Period/Year	PM 2015	NB/SB Street	Kolb Road	
Comment	Analysis 12			

Intersection Data

Area type: Others | Analysis period: 0.25 h | Signal type: Pretimed | % Back of queue: 95

	EB			WB			NB			SB		
	LT	TH	RT	LT	TH	RT	LT	TH	RT	LT	TH	RT
Volume (veh/h)	311	357	146	71	336	109	144	232	206	63	212	96
RTOR volume (veh/h)			78			27			51			52
Peak-hour factor	0.92	0.92	0.92	0.92	0.92	0.92	0.92	0.92	0.92	0.92	0.92	0.92
Heavy vehicles (%)	2	2	2	2	2	2	2	2	2	2	2	2
Start-up lost time, l_1 (s)	2.0	2.0	2.0	2.0	2.0	2.0	2.0	2.0	2.0	2.0	2.0	2.0
Extension of effective green, e (s)	2.0	2.0	2.0	2.0	2.0	2.0	2.0	2.0	2.0	2.0	2.0	2.0
Arrival type, AT	4	4	4	4	4		4	4		4	4	4
Approach pedestrian volume (p/h)	5			5			5			5		
Approach bicycle volume (bic/h)	2			2			2			2		
Left/right parking (Y or N)	N	/	N	N	/	N	N	/	N	N	/	N

Signal Phasing Plan

L: LT T: TH R: RT P: Peds

	Phase 1	Phase 2	Phase 3	Phase 4	Phase 5	Phase 6	Phase 7	Phase 8
	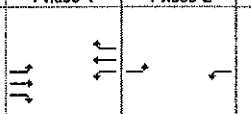							
Green (s)	30.0	5.0	26.0	5.0				
Yellow + All red (s)	6.0	6.0	6.0	6.0				

Cycle (s): 90.0 | Lost time per cycle (s): 24.0 | Critical v/c Ratio: 0.979

Intersection Performance

	EB			WB			NB			SB		
Lane group configuration	L	T	R	L	TR		L	TR		L	T	R
No. of lanes	1	1	1	1	1		1	1		1	1	1
Flow rate (veh/h)	338	388	159	77	484		157	476		68	230	104
Capacity (veh/h)	368	621	512	446	594		514	493		312	538	443
Adjusted saturation flow (veh/h)	1770	1863	1537	1770	1781		1770	1706		1770	1863	1534
v/c ratio	0.918	0.625	0.310	0.173	0.815		0.305	0.966		0.220	0.428	0.235
g/C ratio	0.456	0.333	0.333	0.456	0.333		0.411	0.289		0.411	0.289	0.289
Average back of queue (veh)	8.8	8.8	2.9	0.9	13.4		2.3	17.1		1.0	4.8	2.0
Initial queue in next period (veh)												
Uniform delay (s)	33.2	25.3	22.3	20.4	27.5		19.9	31.6		29.1	26.0	24.4
Incremental delay (s)	30.2	4.7	1.6	0.8	11.7		1.5	32.9		1.6	2.5	1.2
Initial queue delay (s)	0.0	0.0	0.0	0.0	0.0		0.0	0.0		0.0	0.0	0.0
Delay (s)	57.8	28.9	23.0	17.7	38.0		19.0	64.3		27.3	28.3	25.5
LOS	E	C	C	B	D		B	E		C	C	C
Approach delay (s)/LOS	38.9	/	D	35.2	/	D	53.1	/	D	27.4	/	C
Intersection delay (s)/ LOS	39.8				/					D		

CHAPTER 16 - OPERATIONAL ANALYSIS - SUMMARY WORKSHEET

General Information		***Site Information***		
Analyst	MDA	Jurisdiction/Date	PCDOT	12/31/2003
Agency or Company	CEI	EB/WB Street	Sunrise Drive	
Analysis Period/Year	AM 2015	NB/SB Street	Kolb Road	
Comment	Analysis 13			

Intersection Data

Area type Others Analysis period 0.25 h Signal type Pretimed % Back of queue 95

	EB			WB			NB			SB		
	LT	TH	RT	LT	TH	RT	LT	TH	RT	LT	TH	RT
Volume (veh/h)	199	241	95	76	490	130	76	222	186	32	143	93
RTOR volume (veh/h)			51			70			100			50
Peak-hour factor	0.92	0.92	0.92	0.92	0.92	0.92	0.92	0.92	0.92	0.92	0.92	0.92
Heavy vehicles (%)	2	2	2	2	2	2	2	2	2	2	2	2
Start-up lost time, l_1 (s)	2.0	2.0	2.0	2.0	2.0	2.0	2.0	2.0	2.0	2.0	2.0	2.0
Extension of effective green, e (s)	2.0	2.0	2.0	2.0	2.0	2.0	2.0	2.0	2.0	2.0	2.0	2.0
Arrival type, AT	4	4	4	4	4	4	4	4	4	4	4	4
Approach pedestrian volume (p/h)	5			5			5			5		
Approach bicycle volume (bic/h)	2			2			2			2		
Left/right parking (Y or N)	N	/	N	N	/	N	N	/	N	N	/	N

Signal Phasing Plan

L: LT T: TH R: RT P: Peds

	Phase 1	Phase 2	Phase 3	Phase 4	Phase 5	Phase 6	Phase 7	Phase 8
Green (s)	30.0	5.0	26.0	5.0				
Yellow + All red (s)	6.0	6.0	6.0	6.0				

Cycle (s) 90.0 Lost time per cycle (s) 24.0 Critical v/c Ratio 0.715

Intersection Performance

	EB			WB			NB			SB		
Lane group configuration	L	T	R	L	T	R	L	T	R	L	T	R
No. of lanes	1	1	1	1	1	1	1	1	1	1	1	1
Flow rate (veh/h)	216	262	103	83	533	141	83	241	202	35	155	101
Capacity (veh/h)	328	621	512	549	621	512	569	538	443	505	538	443
Adjusted saturation flow (veh/h)	1770	1863	1537	1770	1863	1537	1770	1863	1534	1770	1863	1534
v/c ratio	0.660	0.422	0.202	0.150	0.858	0.276	0.145	0.448	0.456	0.069	0.289	0.228
g/C ratio	0.456	0.333	0.333	0.456	0.333	0.333	0.411	0.289	0.289	0.411	0.289	0.289
Average back of queue (veh)	3.9	5.1	1.8	1.0	15.7	2.5	1.1	5.1	4.3	0.4	3.0	1.9
Initial queue in next period (veh)												
Uniform delay (s)	32.5	23.3	21.4	16.2	28.0	22.0	16.7	26.1	26.2	18.0	24.8	24.4
Incremental delay (s)	10.0	2.1	0.9	0.6	14.3	1.3	0.5	2.7	3.4	0.3	1.4	1.2
Initial queue delay (s)	0.0	0.0	0.0	0.0	0.0	0.0	0.0	0.0	0.0	0.0	0.0	0.0
Delay (s)	37.0	24.4	21.5	14.1	41.1	22.4	15.3	28.7	29.5	16.2	26.1	25.4
LOS	D	C	C	B	D	C	B	C	C	B	C	C
Approach delay (s)/LOS	28.6	/	C	34.7	/	C	26.9	/	C	24.7	/	C
Intersection delay (s)/ LOS	29.8			/						C		

CHAPTER 16 - OPERATIONAL ANALYSIS - SUMMARY WORKSHEET

General Information		***Site Information***		
Analyst	MDA	Jurisdiction/Date	PCDOT	12/31/2003
Agency or Company	CEI	EB/WB Street	Sunrise Drive	
Analysis Period/Year	PM 2015	NB/SB Street	Kolb Road	
Comment	Analysis 13			

Intersection Data

Area type Others Analysis period 0.25 h Signal type Pretimed % Back of queue 95

	EB			WB			NB			SB		
	LT	TH	RT	LT	TH	RT	LT	TH	RT	LT	TH	RT
Volume (veh/h)	311	357	146	71	336	109	144	232	206	63	212	96
RTOR volume (veh/h)			78			27			51			52
Peak-hour factor	0.92	0.92	0.92	0.92	0.92	0.92	0.92	0.92	0.92	0.92	0.92	0.92
Heavy vehicles (%)	2	2	2	2	2	2	2	2	2	2	2	2
Start-up lost time, l_1 (s)	2.0	2.0	2.0	2.0	2.0	2.0	2.0	2.0	2.0	2.0	2.0	2.0
Extension of effective green, e (s)	2.0	2.0	2.0	2.0	2.0	2.0	2.0	2.0	2.0	2.0	2.0	2.0
Arrival type, AT	4	4	4	4	4	4	4	4	4	4	4	4
Approach pedestrian volume (p/h)	5			5			5			5		
Approach bicycle volume (bic/h)	2			2			2			2		
Left/right parking (Y or N)	N	/	N	N	/	N	N	/	N	N	/	N

Signal Phasing Plan

L: LT T: TH R: RT P: Peds

	Phase 1	Phase 2	Phase 3	Phase 4	Phase 5	Phase 6	Phase 7	Phase 8
	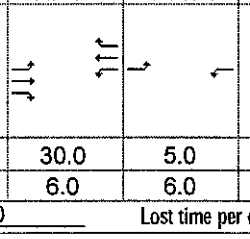							
Green (s)	30.0	5.0	26.0	5.0				
Yellow + All red (s)	6.0	6.0	6.0	6.0				

Cycle (s) 90.0 Lost time per cycle (s) 24.0 Critical v/c Ratio 0.731

Intersection Performance

	EB			WB			NB			SB		
Lane group configuration	L	T	R	L	T	R	L	T	R	L	T	R
No. of lanes	1	1	1	1	1	1	1	1	1	1	1	1
Flow rate (veh/h)	338	388	159	77	365	118	157	252	224	68	230	104
Capacity (veh/h)	464	621	512	446	621	512	514	538	443	496	538	443
Adjusted saturation flow (veh/h)	1770	1863	1537	1770	1863	1537	1770	1863	1534	1770	1863	1534
v/c ratio	0.728	0.625	0.310	0.173	0.588	0.231	0.305	0.469	0.505	0.138	0.428	0.235
g/C ratio	0.456	0.333	0.333	0.456	0.333	0.333	0.411	0.289	0.289	0.411	0.289	0.289
Average back of queue (veh)	6.4	8.8	2.9	0.9	8.0	2.0	2.3	5.4	4.9	0.9	4.8	2.0
Initial queue in next period (veh)												
Uniform delay (s)	26.8	25.3	22.3	20.4	24.9	21.7	19.9	26.3	26.6	18.9	26.0	24.4
Incremental delay (s)	9.6	4.7	1.6	0.8	4.1	1.1	1.5	2.9	4.1	0.6	2.5	1.2
Initial queue delay (s)	0.0	0.0	0.0	0.0	0.0	0.0	0.0	0.0	0.0	0.0	0.0	0.0
Delay (s)	31.8	28.9	23.0	17.7	27.9	21.9	19.0	29.1	30.6	17.3	28.3	25.5
LOS	C	C	C	B	C	C	B	C	C	B	C	C
Approach delay (s)/LOS	29.0 / C			25.3 / C			27.1 / C			25.7 / C		
Intersection delay (s)/ LOS	27.1 / C											

CHAPTER 16 - OPERATIONAL ANALYSIS - SUMMARY WORKSHEET

General Information

Analyst	MDA		
Agency or Company	CEI		
Analysis Period/Year	AM	2020	
Comment	Analysis 14		

Site Information

Jurisdiction/Date	PCDOT	12/31/2003
EB/WB Street	Sunrise Drive	
NB/SB Street	Kolb Road	

Intersection Data

Area type: Others Analysis period: 0.25 h Signal type: Pretimed % Back of queue: 95

	EB			WB			NB			SB		
	LT	TH	RT	LT	TH	RT	LT	TH	RT	LT	TH	RT
Volume (veh/h)	207	251	99	80	513	136	83	241	201	33	145	94
RTOR volume (veh/h)			54			73			109			51
Peak-hour factor	0.92	0.92	0.92	0.92	0.92	0.92	0.92	0.92	0.92	0.92	0.92	0.92
Heavy vehicles (%)	2	2	2	2	2	2	2	2	2	2	2	2
Start-up lost time, l_1 (s)	2.0	2.0	2.0	2.0	2.0	2.0	2.0	2.0	2.0	2.0	2.0	2.0
Extension of effective green, e (s)	2.0	2.0	2.0	2.0	2.0	2.0	2.0	2.0	2.0	2.0	2.0	2.0
Arrival type, AT	4	4	4	4	4	4	4	4	4	4	4	4
Approach pedestrian volume (p/h)	5			5			5			5		
Approach bicycle volume (bic/h)	2			2			2			2		
Left/right parking (Y or N)	N	/	N	N	/	N	N	/	N	N	/	N

Signal Phasing Plan

L: LT T: TH R: RT P: Peds

	Phase 1	Phase 2	Phase 3	Phase 4	Phase 5	Phase 6	Phase 7	Phase 8
Green (s)	30.0	5.0	26.0	5.0				
Yellow + All red (s)	6.0	6.0	6.0	6.0				

Cycle (s): 90.0 Lost time per cycle (s): 24.0 Critical v/c Ratio: 0.752

Intersection Performance

	EB			WB			NB			SB		
Lane group configuration	L	T	R	L	T	R	L	T	R	L	T	R
No. of lanes	1	1	1	1	1	1	1	1	1	1	1	1
Flow rate (veh/h)	225	273	108	87	558	148	90	262	218	36	158	102
Capacity (veh/h)	307	621	512	540	621	512	568	538	443	488	538	443
Adjusted saturation flow (veh/h)	1770	1863	1537	1770	1863	1537	1770	1863	1534	1770	1863	1534
v/c ratio	0.733	0.439	0.210	0.161	0.898	0.289	0.159	0.487	0.493	0.074	0.293	0.231
g/C ratio	0.456	0.333	0.333	0.456	0.333	0.333	0.411	0.289	0.289	0.411	0.289	0.289
Average back of queue (veh)	4.5	5.3	1.8	1.0	17.5	2.6	1.2	5.6	4.8	0.5	3.0	1.9
Initial queue in next period (veh)												
Uniform delay (s)	34.2	23.4	21.5	16.6	28.5	22.1	16.9	26.5	26.5	18.6	24.9	24.4
Incremental delay (s)	14.4	2.3	0.9	0.6	18.3	1.4	0.6	3.1	3.9	0.3	1.4	1.2
Initial queue delay (s)	0.0	0.0	0.0	0.0	0.0	0.0	0.0	0.0	0.0	0.0	0.0	0.0
Delay (s)	42.8	24.8	21.5	14.4	45.7	22.6	15.5	29.4	30.3	16.8	26.1	25.4
LOS	D	C	C	B	D	C	B	C	C	B	C	C
Approach delay (s)/LOS	30.9	/	C	37.9	/	D	27.6	/	C	24.8	/	C
Intersection delay (s)/ LOS	31.7			/			C					

CHAPTER 16 - OPERATIONAL ANALYSIS - SUMMARY WORKSHEET

General Information		Site Information		
Analyst	MDA	Jurisdiction/Date	PCDOT	12/31/2003
Agency or Company	CEI	EB/WB Street	Sunrise Drive	
Analysis Period/Year	PM 2020	NB/SB Street	Kolb Road	
Comment	Analysis 14□□			

Intersection Data

Area type: Others Analysis period: 0.25 h Signal type: Pretimed % Back of queue: 95

	EB			WB			NB			SB		
	LT	TH	RT	LT	TH	RT	LT	TH	RT	LT	TH	RT
Volume (veh/h)	326	373	151	74	354	93	151	243	175	65	217	99
RTOR volume (veh/h)			82			50			94			53
Peak-hour factor	0.92	0.92	0.92	0.92	0.92	0.92	0.92	0.92	0.92	0.92	0.92	0.92
Heavy vehicles (%)	2	2	2	2	2	2	2	2	2	2	2	2
Start-up lost time, l_1 (s)	2.0	2.0	2.0	2.0	2.0	2.0	2.0	2.0	2.0	2.0	2.0	2.0
Extension of effective green, e (s)	2.0	2.0	2.0	2.0	2.0	2.0	2.0	2.0	2.0	2.0	2.0	2.0
Arrival type, AT	4	4	4	4	4	4	4	4	4	4	4	4
Approach pedestrian volume (p/h)	5			5			5			5		
Approach bicycle volume (bic/h)	2			2			2			2		
Left/right parking (Y or N)	N	/	N	N	/	N	N	/	N	N	/	N

Signal Phasing Plan

L: LT T: TH R: RT P: Peds

	Phase 1	Phase 2	Phase 3	Phase 4	Phase 5	Phase 6	Phase 7	Phase 8
Green (s)	30.0	5.0	26.0	5.0				
Yellow + All red (s)	6.0	6.0	6.0	6.0				

Cycle (s): 90.0 Lost time per cycle (s): 24.0 Critical v/c Ratio: 0.769

Intersection Performance

	EB			WB			NB			SB		
Lane group configuration	L	T	R	L	T	R	L	T	R	L	T	R
No. of lanes	1	1	1	1	1	1	1	1	1	1	1	1
Flow rate (veh/h)	354	405	164	80	385	101	164	264	190	71	236	108
Capacity (veh/h)	449	621	512	432	621	512	509	538	443	486	538	443
Adjusted saturation flow (veh/h)	1770	1863	1537	1770	1863	1537	1770	1863	1534	1770	1863	1534
v/c ratio	0.790	0.653	0.320	0.186	0.620	0.197	0.322	0.491	0.429	0.145	0.438	0.243
g/C ratio	0.456	0.333	0.333	0.456	0.333	0.333	0.411	0.289	0.289	0.411	0.289	0.289
Average back of queue (veh)	7.3	9.4	3.0	1.0	8.7	1.7	2.4	5.7	4.0	0.9	4.9	2.0
Initial queue in next period (veh)												
Uniform delay (s)	28.3	25.6	22.4	21.1	25.2	21.4	20.2	26.5	26.0	19.3	26.1	24.5
Incremental delay (s)	13.2	5.3	1.6	1.0	4.6	0.9	1.7	3.2	3.0	0.6	2.6	1.3
Initial queue delay (s)	0.0	0.0	0.0	0.0	0.0	0.0	0.0	0.0	0.0	0.0	0.0	0.0
Delay (s)	36.7	29.8	23.1	18.5	28.8	21.4	19.5	29.6	28.8	17.7	28.5	25.6
LOS	D	C	C	B	C	C	B	C	C	B	C	C
Approach delay (s)/LOS	31.3	/	C	26.0	/	C	26.7	/	C	25.9	/	C
Intersection delay (s)/ LOS	28.1				/					C		

CHAPTER 16 - OPERATIONAL ANALYSIS - SUMMARY WORKSHEET

General Information		***Site Information***		
Analyst	MDA	Jurisdiction/Date	PCDOT	12/31/2003
Agency or Company	CEI	EB/WB Street	Sunrise Drive	
Analysis Period/Year	AM 2025	NB/SB Street	Kolb Road	
Comment	Analysis 15			

Intersection Data

Area type: Others Analysis period: 0.25 h Signal type: Pretimed % Back of queue: 95

	EB			WB			NB			SB		
	LT	TH	RT	LT	TH	RT	LT	TH	RT	LT	TH	RT
Volume (veh/h)	216	261	103	84	536	142	89	259	217	33	148	96
RTOR volume (veh/h)			56			76			117			52
Peak-hour factor	0.92	0.92	0.92	0.92	0.92	0.92	0.92	0.92	0.92	0.92	0.92	0.92
Heavy vehicles (%)	2	2	2	2	2	2	2	2	2	2	2	2
Start-up lost time, l_1 (s)	2.0	2.0	2.0	2.0	2.0	2.0	2.0	2.0	2.0	2.0	2.0	2.0
Extension of effective green, e (s)	2.0	2.0	2.0	2.0	2.0	2.0	2.0	2.0	2.0	2.0	2.0	2.0
Arrival type, AT	4	4	4	4	4	4	4	4	4	4	4	4
Approach pedestrian volume (p/h)	5			5			5			5		
Approach bicycle volume (bic/h)	2			2			2			2		
Left/right parking (Y or N)	N	/	N	N	/	N	N	/	N	N	/	N

Signal Phasing Plan

L: LT T: TH R: RT P: Peds

	Phase 1	Phase 2	Phase 3	Phase 4	Phase 5	Phase 6	Phase 7	Phase 8
	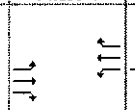		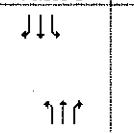	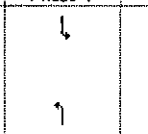				
Green (s)	30.0	5.0	26.0	5.0				
Yellow + All red (s)	6.0	6.0	6.0	6.0				

Cycle (s): 90.0 Lost time per cycle (s): 24.0 Critical v/c Ratio: 0.781

Intersection Performance

	EB			WB			NB			SB		
Lane group configuration	L	T	R	L	T	R	L	T	R	L	T	R
No. of lanes	1	1	1	1	1	1	1	1	1	1	1	1
Flow rate (veh/h)	235	284	112	91	583	154	97	282	236	36	161	104
Capacity (veh/h)	299	621	512	531	621	512	567	538	443	472	538	443
Adjusted saturation flow (veh/h)	1770	1863	1537	1770	1863	1537	1770	1863	1534	1770	1863	1534
v/c ratio	0.785	0.457	0.219	0.172	0.938	0.301	0.171	0.523	0.532	0.076	0.299	0.235
g/C ratio	0.456	0.333	0.333	0.456	0.333	0.333	0.411	0.289	0.289	0.411	0.289	0.289
Average back of queue (veh)	5.0	5.6	1.9	1.1	19.6	2.8	1.3	6.2	5.3	0.5	3.1	2.0
Initial queue in next period (veh)												
Uniform delay (s)	35.2	23.6	21.6	17.0	29.1	22.2	17.0	26.8	26.9	19.3	24.9	24.4
Incremental delay (s)	18.5	2.4	1.0	0.7	23.8	1.5	0.7	3.6	4.5	0.3	1.4	1.2
Initial queue delay (s)	0.0	0.0	0.0	0.0	0.0	0.0	0.0	0.0	0.0	0.0	0.0	0.0
Delay (s)	47.7	25.0	21.7	14.8	51.7	22.8	15.7	30.3	31.2	17.3	26.2	25.5
LOS	D	C	C	B	D	C	B	C	C	B	C	C
Approach delay (s)/LOS	32.9 / C			42.2 / D			28.3 / C			24.9 / C		
Intersection delay (s)/ LOS	34.0 / C											

CHAPTER 16 - OPERATIONAL ANALYSIS - SUMMARY WORKSHEET

General Information		Site Information		
Analyst	MDA	Jurisdiction/Date	PCDOT	12/31/2003
Agency or Company	CEI	EB/WB Street	Sunrise Drive	
Analysis Period/Year	PM 2025	NB/SB Street	Kolb Road	
Comment	Analysis 15			

Intersection Data

Area type: Others Analysis period: 0.25 h Signal type: Pretimed % Back of queue: 95

	EB			WB			NB			SB		
	LT	TH	RT	LT	TH	RT	LT	TH	RT	LT	TH	RT
Volume (veh/h)	340	389	158	78	372	97	157	253	182	66	222	101
RTOR volume (veh/h)			85			53			98			54
Peak-hour factor	0.92	0.92	0.92	0.92	0.92	0.92	0.92	0.92	0.92	0.92	0.92	0.92
Heavy vehicles (%)	2	2	2	2	2	2	2	2	2	2	2	2
Start-up lost time, l_1 (s)	2.0	2.0	2.0	2.0	2.0	2.0	2.0	2.0	2.0	2.0	2.0	2.0
Extension of effective green, e (s)	2.0	2.0	2.0	2.0	2.0	2.0	2.0	2.0	2.0	2.0	2.0	2.0
Arrival type, AT	4	4	4	4	4	4	4	4	4	4	4	4
Approach pedestrian volume (p/h)	5			5			5			5		
Approach bicycle volume (bic/h)	2			2			2			2		
Left/right parking (Y or N)	N	/	N	N	/	N	N	/	N	N	/	N

Signal Phasing Plan

L: LT T: TH R: RT P: Peds

	Phase 1	Phase 2	Phase 3	Phase 4	Phase 5	Phase 6	Phase 7	Phase 8
Green (s)	30.0	5.0	26.0	5.0				
Yellow + All red (s)	6.0	6.0	6.0	6.0				

Cycle (s): 90.0 Lost time per cycle (s): 24.0 Critical v/c Ratio: 0.806

Intersection Performance

	EB			WB			NB			SB		
Lane group configuration	L	T	R	L	T	R	L	T	R	L	T	R
No. of lanes	1	1	1	1	1	1	1	1	1	1	1	1
Flow rate (veh/h)	370	423	172	85	404	105	171	275	198	72	241	110
Capacity (veh/h)	433	621	512	418	621	512	505	538	443	477	538	443
Adjusted saturation flow (veh/h)	1770	1863	1537	1770	1863	1537	1770	1863	1534	1770	1863	1534
v/c ratio	0.854	0.681	0.335	0.203	0.651	0.206	0.338	0.511	0.446	0.150	0.448	0.248
g/C ratio	0.456	0.333	0.333	0.456	0.333	0.333	0.411	0.289	0.289	0.411	0.289	0.289
Average back of queue (veh)	8.4	10.1	3.2	1.0	9.4	1.8	2.5	6.0	4.2	0.9	5.1	2.1
Initial queue in next period (veh)												
Uniform delay (s)	29.8	25.9	22.5	22.0	25.5	21.5	20.5	26.7	26.1	19.7	26.1	24.5
Incremental delay (s)	18.9	5.9	1.8	1.1	5.2	0.9	1.8	3.4	3.2	0.7	2.7	1.3
Initial queue delay (s)	0.0	0.0	0.0	0.0	0.0	0.0	0.0	0.0	0.0	0.0	0.0	0.0
Delay (s)	43.7	30.7	23.4	19.4	29.7	21.5	19.9	29.9	29.2	18.1	28.7	25.7
LOS	D	C	C	B	C	C	B	C	C	B	C	C
Approach delay (s)/LOS	34.4	/	C	26.8	/	C	27.1	/	C	26.1	/	C
Intersection delay (s)/ LOS	29.5			/			C					

CHAPTER 16 - OPERATIONAL ANALYSIS - SUMMARY WORKSHEET

General Information

Analyst: JAS
Agency or Company: CEI
Analysis Period/Year: AM 2003
Comment: Analysis 16

Site Information

Jurisdiction/Date: PCDOT 12/31/2003
EB/WB Street: River Road
NB/SB Street: Craycroft Road

Intersection Data

Area type: Others Analysis period: 0.25 h Signal type: Pretimed % Back of queue: 95

	EB			WB			NB			SB		
	LT	TH	RT	LT	TH	RT	LT	TH	RT	LT	TH	RT
Volume (veh/h)	86	291	84	595	415	81	54	261	41	138	1043	49
RTOR volume (veh/h)			21			20			10			26
Peak-hour factor	0.92	0.92	0.92	0.92	0.92	0.92	0.92	0.92	0.92	0.92	0.92	0.92
Heavy vehicles (%)	2	2	2	2	2	2	2	2	2	2	2	2
Start-up lost time, l_1 (s)	2.0	2.0	2.0	2.0	2.0	2.0	2.0	2.0	2.0	2.0	2.0	2.0
Extension of effective green, e (s)	2.0	2.0	2.0	2.0	2.0	2.0	2.0	2.0	2.0	2.0	2.0	2.0
Arrival type, AT	4	4		4	4		4	4		4	4	4
Approach pedestrian volume (p/h)	5			5			5			5		
Approach bicycle volume (bic/h)	2			2			2			2		
Left/right parking (Y or N)	N	/	N	N	/	N	N	/	N	N	/	N

Signal Phasing Plan

L: LT T: TH R: RT P: Peds

	Phase 1	Phase 2	Phase 3	Phase 4	Phase 5	Phase 6	Phase 7	Phase 8
	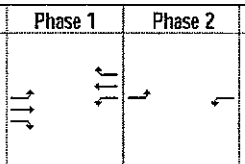							
Green (s)	31.0	30.0	30.0	5.0				
Yellow + All red (s)	6.0	6.0	6.0	6.0				

Cycle (s): 120.0 Lost time per cycle (s): 24.0 Critical v/c Ratio: 1.163

Intersection Performance

	EB			WB			NB			SB		
Lane group configuration	L	TR		L	TR		L	TR		L	T	R
No. of lanes	1	1		1	1		1	2		1	2	1
Flow rate (veh/h)	93	408		647	539		59	328		150	1134	53
Capacity (veh/h)	593	463		624	468		224	865		396	887	383
Adjusted saturation flow (veh/h)	1770	1792		1770	1811		1770	3459		1770	3547	1532
v/c ratio	0.158	0.880		1.036	1.152		0.262	0.380		0.379	1.279	0.139
g/C ratio	0.558	0.258		0.558	0.258		0.342	0.250		0.342	0.250	0.250
Average back of queue (veh)	1.1	16.6		25.5	31.6		1.3	4.9		3.5	40.3	1.4
Initial queue in next period (veh)				5.7	17.8						32.4	
Uniform delay (s)	31.0	42.7		38.5	44.5		51.2	37.3		32.6	45.0	35.0
Incremental delay (s)	0.6	20.7		45.8	90.5		2.8	1.3		2.8	134.1	0.8
Initial queue delay (s)	0.0	0.0		0.0	0.0		0.0	0.0		0.0	0.0	0.0
Delay (s)	21.3	63.4		71.4	135.0		51.5	38.6		33.8	179.1	35.8
LOS	C	E		E	F		D	D		C	F	D
Approach delay (s)/LOS	55.6	/	E	100.3	/	F	40.5	/	D	157.1	/	F
Intersection delay (s)/ LOS	109.2				/					F		

CHAPTER 16 - OPERATIONAL ANALYSIS - SUMMARY WORKSHEET

General Information		***Site Information***		
Analyst	JAS	Jurisdiction/Date	PCDOT	12/31/2003
Agency or Company	CEI	EB/WB Street	River Road	
Analysis Period/Year	PM 2003	NB/SB Street	Craycroft Road	
Comment	Analysis 16			

Intersection Data

Area type Others Analysis period 0.25 h Signal type Pretimed % Back of queue 95

	EB			WB			NB			SB		
	LT	TH	RT	LT	TH	RT	LT	TH	RT	LT	TH	RT
Volume (veh/h)	54	479	131	265	183	45	251	815	452	107	498	16
RTOR volume (veh/h)			11			11			50			9
Peak-hour factor	0.92	0.92	0.92	0.92	0.92	0.92	0.92	0.92	0.92	0.92	0.92	0.92
Heavy vehicles (%)	2	2	2	2	2	2	2	2	2	2	2	2
Start-up lost time, l_1 (s)	2.0	2.0	2.0	2.0	2.0	2.0	2.0	2.0	2.0	2.0	2.0	2.0
Extension of effective green, e (s)	2.0	2.0	2.0	2.0	2.0	2.0	2.0	2.0	2.0	2.0	2.0	2.0
Arrival type, AT	4	4		4	4		4	4		4	4	4
Approach pedestrian volume (p/h)	5			5			5			5		
Approach bicycle volume (bic/h)	2			2			2			2		
Left/right parking (Y or N)	N	/	N	N	/	N	N	/	N	N	/	N

Signal Phasing Plan

L: LT T: TH R: RT P: Peds

	Phase 1	Phase 2	Phase 3	Phase 4	Phase 5	Phase 6	Phase 7	Phase 8
	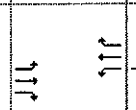	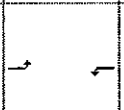	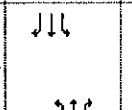	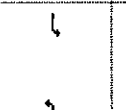				
Green (s)	36.7	11.6	41.3	6.4				
Yellow + All red (s)	6.0	6.0	6.0	6.0				

Cycle (s) 120.0 Lost time per cycle (s) 24.0 Critical v/c Ratio 1.178

Intersection Performance

	EB			WB			NB			SB		
Lane group configuration	L	TR		L	TR		L	TR		L	T	R
No. of lanes	1	1		1	1		1	2		1	2	1
Flow rate (veh/h)	59	663		288	248		273	1377		116	541	17
Capacity (veh/h)	548	549		322	551		423	1143		245	1221	529
Adjusted saturation flow (veh/h)	1770	1796		1770	1801		1770	3322		1770	3547	1537
v/c ratio	0.107	1.207		0.896	0.450		0.646	1.205		0.475	0.443	0.033
g/C ratio	0.453	0.306		0.453	0.306		0.447	0.344		0.447	0.344	0.344
Average back of queue (veh)	0.9	41.8		9.6	6.7		6.2	45.9		2.4	7.2	0.3
Initial queue in next period (veh)		28.5						30.7				
Uniform delay (s)	22.6	41.6		52.2	33.5		33.2	39.4		51.6	30.5	26.1
Incremental delay (s)	0.4	109.6		29.5	2.6		7.4	100.6		6.5	1.2	0.1
Initial queue delay (s)	0.0	0.0		0.0	0.0		0.0	0.0		0.0	0.0	0.0
Delay (s)	19.2	150.5		73.0	35.5		35.3	137.9		49.9	30.1	24.9
LOS	B	F		E	D		D	F		D	C	C
Approach delay (s)/LOS	139.8	/	F	55.7	/	E	121.0	/	F	33.4	/	C
Intersection delay (s)/ LOS	98.5				/					F		

CHAPTER 16 - OPERATIONAL ANALYSIS - SUMMARY WORKSHEET

General Information		***Site Information***		
Analyst	JAS	Jurisdiction/Date	PCDOT	12/31/2003
Agency or Company	CEI	EB/WB Street	River Road	
Analysis Period/Year	AM 2003	NB/SB Street	Craycroft Road	
Comment	Analysis 17			

Intersection Data

Area type: Others Analysis period: 0.25 h Signal type: Pretimed % Back of queue: 95

	EB			WB			NB			SB		
	LT	TH	RT	LT	TH	RT	LT	TH	RT	LT	TH	RT
Volume (veh/h)	86	291	68	595	415	66	54	261	33	138	1043	49
RTOR volume (veh/h)			37			35			18			26
Peak-hour factor	0.92	0.92	0.92	0.92	0.92	0.92	0.92	0.92	0.92	0.92	0.92	0.92
Heavy vehicles (%)	2	2	2	2	2	2	2	2	2	2	2	2
Start-up lost time, l_1 (s)	2.0	2.0	2.0	2.0	2.0	2.0	2.0	2.0	2.0	2.0	2.0	2.0
Extension of effective green, e (s)	2.0	2.0	2.0	2.0	2.0	2.0	2.0	2.0	2.0	2.0	2.0	2.0
Arrival type, AT	4	4	4	4	4	4	4	4	4	4	4	4
Approach pedestrian volume (p/h)	5			5			5			5		
Approach bicycle volume (bic/h)	2			2			2			2		
Left/right parking (Y or N)	N	/	N	N	/	N	N	/	N	N	/	N

Signal Phasing Plan

L: LT T: TH R: RT P: Peds

	Phase 1	Phase 2	Phase 3	Phase 4	Phase 5	Phase 6	Phase 7	Phase 8
Green (s)	32.0	23.0	36.0	5.0				
Yellow + All red (s)	6.0	6.0	6.0	6.0				

Cycle (s): 120.0 Lost time per cycle (s): 24.0 Critical v/c Ratio: 1.064

Intersection Performance

	EB			WB			NB			SB		
Lane group configuration	L	T	R	L	T	R	L	T	R	L	T	R
No. of lanes	1	1	1	1	1	1	1	2	1	1	2	1
Flow rate (veh/h)	93	316	74	647	451	72	59	284	36	150	1134	53
Capacity (veh/h)	497	497	414	606	497	414	224	1064	460	478	1064	460
Adjusted saturation flow (veh/h)	1770	1863	1553	1770	1863	1553	1770	3547	1535	1770	3547	1535
v/c ratio	0.188	0.637	0.178	1.067	0.908	0.173	0.262	0.267	0.078	0.314	1.066	0.116
g/C ratio	0.508	0.267	0.267	0.508	0.267	0.267	0.392	0.300	0.300	0.392	0.300	0.300
Average back of queue (veh)	1.3	10.2	1.9	28.3	19.0	1.8	1.2	3.7	0.8	3.0	31.1	1.2
Initial queue in next period (veh)				10.1							9.2	
Uniform delay (s)	31.2	38.9	33.9	38.2	42.6	33.8	51.2	32.0	30.1	26.3	42.0	30.5
Incremental delay (s)	0.8	6.1	0.9	55.7	23.0	0.9	2.8	0.6	0.3	1.7	46.8	0.5
Initial queue delay (s)	0.0	0.0	0.0	0.0	0.0	0.0	0.0	0.0	0.0	0.0	0.0	0.0
Delay (s)	24.3	45.0	34.8	84.5	65.6	34.7	49.1	32.1	30.0	25.5	88.2	30.5
LOS	C	D	C	F	E	C	D	C	C	C	F	C
Approach delay (s)/LOS	39.4	/	D	74.2	/	E	34.5	/	C	78.9	/	E
Intersection delay (s)/ LOS	66.6			/			E					

CHAPTER 16 - OPERATIONAL ANALYSIS - SUMMARY WORKSHEET

General Information		Site Information		
Analyst	JAS	Jurisdiction/Date	PCDOT	12/31/2003
Agency or Company	CEI	EB/WB Street	River Road	
Analysis Period/Year	PM 2003	NB/SB Street	Craycroft Road	
Comment	Analysis 17			

Intersection Data

Area type: Others Analysis period: 0.25 h Signal type: Pretimed % Back of queue: 95

	EB			WB			NB			SB		
	LT	TH	RT	LT	TH	RT	LT	TH	RT	LT	TH	RT
Volume (veh/h)	54	479	131	265	183	45	251	815	452	107	498	16
RTOR volume (veh/h)			11			11			50			9
Peak-hour factor	0.92	0.92	0.92	0.92	0.92	0.92	0.92	0.92	0.92	0.92	0.92	0.92
Heavy vehicles (%)	2	2	2	2	2	2	2	2	2	2	2	2
Start-up lost time, l_1 (s)	2.0	2.0	2.0	2.0	2.0	2.0	2.0	2.0	2.0	2.0	2.0	2.0
Extension of effective green, e (s)	2.0	2.0	2.0	2.0	2.0	2.0	2.0	2.0	2.0	2.0	2.0	2.0
Arrival type, AT	4	4	4	4	4	4	4	4	4	4	4	4
Approach pedestrian volume (p/h)	5			5			5			5		
Approach bicycle volume (bic/h)	2			2			2			2		
Left/right parking (Y or N)	N	/	N	N	/	N	N	/	N	N	/	N

Signal Phasing Plan

L: LT T: TH R: RT P: Peds

	Phase 1	Phase 2	Phase 3	Phase 4	Phase 5	Phase 6	Phase 7	Phase 8
	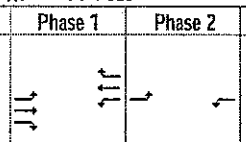							
Green (s)	36.0	14.0	41.0	5.0				
Yellow + All red (s)	6.0	6.0	6.0	6.0				

Cycle (s): 120.0 Lost time per cycle (s): 24.0 Critical v/c Ratio: 0.987

Intersection Performance

	EB			WB			NB			SB		
Lane group configuration	L	T	R	L	T	R	L	T	R	L	T	R
No. of lanes	1	1	1	1	1	1	1	2	1	1	2	1
Flow rate (veh/h)	59	521	142	288	199	49	273	886	491	116	541	17
Capacity (veh/h)	615	559	466	357	559	466	399	1212	525	268	1212	525
Adjusted saturation flow (veh/h)	1770	1863	1554	1770	1863	1554	1770	3547	1537	1770	3547	1537
v/c ratio	0.095	0.932	0.305	0.807	0.356	0.105	0.683	0.731	0.936	0.434	0.447	0.033
g/C ratio	0.467	0.300	0.300	0.467	0.300	0.300	0.433	0.342	0.342	0.433	0.342	0.342
Average back of queue (veh)	0.8	22.3	3.6	8.2	5.1	1.1	6.6	15.1	21.1	2.4	7.3	0.4
Initial queue in next period (veh)												
Uniform delay (s)	19.9	40.8	32.4	45.2	32.9	30.4	34.8	34.7	38.2	39.8	30.7	26.3
Incremental delay (s)	0.3	24.5	1.7	17.5	1.8	0.5	9.1	3.9	26.2	5.0	1.2	0.1
Initial queue delay (s)	0.0	0.0	0.0	0.0	0.0	0.0	0.0	0.0	0.0	0.0	0.0	0.0
Delay (s)	16.5	64.7	33.6	54.4	34.2	30.4	38.9	36.9	62.6	39.1	30.4	25.1
LOS	B	E	C	D	C	C	D	D	E	D	C	C
Approach delay (s)/LOS	54.7	/	D	44.7	/	D	44.9	/	D	31.8	/	C
Intersection delay (s)/ LOS	44.3				/				D			

CHAPTER 16 - OPERATIONAL ANALYSIS - SUMMARY WORKSHEET

General Information		Site Information		
Analyst	JAS	Jurisdiction/Date	PCDOT	12/31/2003
Agency or Company	CEI	EB/WB Street	River Road	
Analysis Period/Year	AM 2003	NB/SB Street	Craycroft Road	
Comment	Analysis 18			

Intersection Data

Area type: Others Analysis period: 0.25 h Signal type: Pretimed % Back of queue: 95

	EB			WB			NB			SB		
	LT	TH	RT	LT	TH	RT	LT	TH	RT	LT	TH	RT
Volume (veh/h)	90	305	71	616	473	71	58	281	36	149	1124	53
RTOR volume (veh/h)			39			38			19			28
Peak-hour factor	0.92	0.92	0.92	0.92	0.92	0.92	0.92	0.92	0.92	0.92	0.92	0.92
Heavy vehicles (%)	2	2	2	2	2	2	2	2	2	2	2	2
Start-up lost time, l_1 (s)	2.0	2.0	2.0	2.0	2.0	2.0	2.0	2.0	2.0	2.0	2.0	2.0
Extension of effective green, e (s)	2.0	2.0	2.0	2.0	2.0	2.0	2.0	2.0	2.0	2.0	2.0	2.0
Arrival type, AT	4	4	4	4	4	4	4	4	4	4	4	4
Approach pedestrian volume (p/h)	5			5			5			5		
Approach bicycle volume (bic/h)	2			2			2			2		
Left/right parking (Y or N)	N	/	N	N	/	N	N	/	N	N	/	N

Signal Phasing Plan

L: LT T: TH R: RT P: Peds

	Phase 1	Phase 2	Phase 3	Phase 4	Phase 5	Phase 6	Phase 7	Phase 8
Green (s)	21.0	28.0	42.0	5.0				
Yellow + All red (s)	6.0	6.0	6.0	6.0				

Cycle (s): 120.0 Lost time per cycle (s): 24.0 Critical v/c Ratio: 1.028

Intersection Performance

	EB			WB			NB			SB		
Lane group configuration	L	T	R	L	T	R	L	T	R	L	T	R
No. of lanes	1	2	1	1	2	1	1	2	1	1	2	1
Flow rate (veh/h)	98	332	77	670	514	77	63	305	39	162	1222	58
Capacity (veh/h)	571	621	271	645	621	271	224	1241	544	527	1241	544
Adjusted saturation flow (veh/h)	1770	3547	1547	1770	3547	1549	1770	3547	1556	1770	3547	1556
v/c ratio	0.171	0.534	0.285	1.038	0.828	0.285	0.281	0.246	0.072	0.308	0.984	0.106
g/C ratio	0.458	0.175	0.175	0.458	0.175	0.175	0.442	0.350	0.350	0.442	0.350	0.350
Average back of queue (veh)	1.6	5.8	2.3	30.3	10.9	2.3	1.2	3.6	0.8	2.8	29.6	1.2
Initial queue in next period (veh)				6.2								
Uniform delay (s)	27.3	45.0	43.0	37.3	47.8	43.0	47.3	27.7	26.0	22.4	38.7	26.3
Incremental delay (s)	0.6	3.3	2.6	45.7	12.1	2.6	3.1	0.5	0.3	1.5	22.0	0.4
Initial queue delay (s)	0.0	0.0	0.0	0.0	0.0	0.0	0.0	0.0	0.0	0.0	0.0	0.0
Delay (s)	23.2	48.3	45.6	76.5	59.9	45.6	43.2	26.7	24.8	20.5	58.5	25.2
LOS	C	D	D	E	E	D	D	C	C	C	E	C
Approach delay (s)/LOS	43.1	/	D	67.8	/	E	29.1	/	C	52.9	/	D
Intersection delay (s)/ LOS	54.0			/			D					

CHAPTER 16 - OPERATIONAL ANALYSIS - SUMMARY WORKSHEET

General Information		Site Information		
Analyst	JAS	Jurisdiction/Date	PCDOT	12/31/2003
Agency or Company	CEI	EB/WB Street	River Road	
Analysis Period/Year	PM 2005	NB/SB Street	Craycroft Road	
Comment	Analysis 18			

Intersection Data

Area type: Others Analysis period: 0.25 h Signal type: Pretimed % Back of queue: 95

	EB			WB			NB			SB		
	LT	TH	RT	LT	TH	RT	LT	TH	RT	LT	TH	RT
Volume (veh/h)	57	502	97	286	197	39	271	879	352	115	537	18
RTOR volume (veh/h)			52			21			189			9
Peak-hour factor	0.92	0.92	0.92	0.92	0.92	0.92	0.92	0.92	0.92	0.92	0.92	0.92
Heavy vehicles (%)	2	2	2	2	2	2	2	2	2	2	2	2
Start-up lost time, l_1 (s)	2.0	2.0	2.0	2.0	2.0	2.0	2.0	2.0	2.0	2.0	2.0	2.0
Extension of effective green, e (s)	2.0	2.0	2.0	2.0	2.0	2.0	2.0	2.0	2.0	2.0	2.0	2.0
Arrival type, AT	4	4	4	4	4	4	4	4	4	4	4	4
Approach pedestrian volume (p/h)	5			5			5			5		
Approach bicycle volume (bic/h)	2			2			2			2		
Left/right parking (Y or N)	N	/	N	N	/	N	N	/	N	N	/	N

Signal Phasing Plan

L: LT T: TH R: RT P: Peds

	Phase 1	Phase 2	Phase 3	Phase 4	Phase 5	Phase 6	Phase 7	Phase 8
	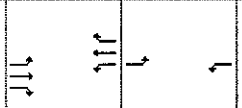							
Green (s)	41.0	14.0	36.0	5.0				
Yellow + All red (s)	6.0	6.0	6.0	6.0				

Cycle (s): 120.0 Lost time per cycle (s): 24.0 Critical v/c Ratio: 0.940

Intersection Performance

	EB			WB			NB			SB		
Lane group configuration	L	T	R	L	T	R	L	T	R	L	T	R
No. of lanes	1	2	1	1	2	1	1	2	1	1	2	1
Flow rate (veh/h)	62	546	105	311	214	42	295	955	383	125	584	20
Capacity (veh/h)	687	1212	531	530	1212	531	338	1064	466	224	1064	466
Adjusted saturation flow (veh/h)	1770	3547	1555	1770	3547	1555	1770	3547	1554	1770	3547	1554
v/c ratio	0.090	0.450	0.198	0.586	0.177	0.080	0.873	0.898	0.821	0.557	0.549	0.042
g/C ratio	0.508	0.342	0.342	0.508	0.342	0.342	0.392	0.300	0.300	0.392	0.300	0.300
Average back of queue (veh)	0.8	7.4	2.3	5.9	2.4	0.9	9.6	20.5	14.3	3.1	8.9	0.4
Initial queue in next period (veh)												
Uniform delay (s)	15.3	30.7	27.9	29.0	27.7	26.7	42.9	40.2	39.0	47.8	35.2	29.8
Incremental delay (s)	0.3	1.2	0.8	4.7	0.3	0.3	25.3	11.8	14.9	9.6	2.0	0.2
Initial queue delay (s)	0.0	0.0	0.0	0.0	0.0	0.0	0.0	0.0	0.0	0.0	0.0	0.0
Delay (s)	11.9	30.4	27.3	26.5	26.6	25.7	64.1	51.5	53.4	52.8	36.7	29.6
LOS	B	C	C	C	C	C	E	D	D	D	D	C
Approach delay (s)/LOS	28.4	/	C	26.5	/	C	54.2	/	D	39.3	/	D
Intersection delay (s)/ LOS	41.8			/			D					

CHAPTER 16 - OPERATIONAL ANALYSIS - SUMMARY WORKSHEET

General Information		Site Information		
Analyst	JAS	Jurisdiction/Date	PCDOT	12/31/2003
Agency or Company	CEI	EB/WB Street	River Road	
Analysis Period/Year	AM 2010	NB/SB Street	Craycroft Road	
Comment	Analysis 19			

Intersection Data

Area type: Others Analysis period: 0.25 h Signal type: Pretimed % Back of queue: 95

	EB			WB			NB			SB		
	LT	TH	RT	LT	TH	RT	LT	TH	RT	LT	TH	RT
Volume (veh/h)	96	326	77	648	560	79	65	312	40	165	1247	58
RTOR volume (veh/h)			41			42			21			32
Peak-hour factor	0.92	0.92	0.92	0.92	0.92	0.92	0.92	0.92	0.92	0.92	0.92	0.92
Heavy vehicles (%)	2	2	2	2	2	2	2	2	2	2	2	2
Start-up lost time, l_1 (s)	2.0	2.0	2.0	2.0	2.0	2.0	2.0	2.0	2.0	2.0	2.0	2.0
Extension of effective green, e (s)	2.0	2.0	2.0	2.0	2.0	2.0	2.0	2.0	2.0	2.0	2.0	2.0
Arrival type, AT	4	4	4	4	4	4	4	4	4	4	4	4
Approach pedestrian volume (p/h)	5			5			5			5		
Approach bicycle volume (bic/h)	2			2			2			2		
Left/right parking (Y or N)	N	/	N	N	/	N	N	/	N	N	/	N

Signal Phasing Plan

L: LT T: TH R: RT P: Peds

	Phase 1	Phase 2	Phase 3	Phase 4	Phase 5	Phase 6	Phase 7	Phase 8
Green (s)	18.0	34.0	40.0	4.0				
Yellow + All red (s)	6.0	6.0	6.0	6.0				

Cycle (s): 120.0 Lost time per cycle (s): 24.0 Critical v/c Ratio: 1.122

Intersection Performance

	EB			WB			NB			SB		
Lane group configuration	L	T	R	L	T	R	L	T	R	L	T	R
No. of lanes	1	2	1	1	2	1	1	2	1	1	2	1
Flow rate (veh/h)	104	354	84	704	609	86	71	339	43	179	1355	63
Capacity (veh/h)	652	532	232	694	532	232	210	1182	518	474	1182	518
Adjusted saturation flow (veh/h)	1770	3547	1547	1770	3547	1549	1770	3547	1555	1770	3547	1555
v/c ratio	0.160	0.666	0.361	1.014	1.144	0.370	0.337	0.287	0.084	0.379	1.147	0.122
g/C ratio	0.483	0.150	0.150	0.483	0.150	0.150	0.417	0.333	0.333	0.417	0.333	0.333
Average back of queue (veh)	1.6	6.8	2.7	30.6	18.7	2.8	1.4	4.2	0.9	3.5	41.6	1.4
Initial queue in next period (veh)				2.5	10.1						22.7	
Uniform delay (s)	26.2	48.2	45.8	36.0	51.0	45.9	52.5	29.5	27.4	25.9	40.0	27.8
Incremental delay (s)	0.5	6.5	4.3	37.8	85.3	4.5	4.3	0.6	0.3	2.3	76.2	0.5
Initial queue delay (s)	0.0	0.0	0.0	0.0	0.0	0.0	0.0	0.0	0.0	0.0	0.0	0.0
Delay (s)	21.2	54.7	50.1	66.3	136.3	50.4	50.3	28.9	26.6	25.0	114.5	27.1
LOS	C	D	D	E	F	D	D	C	C	C	F	C
Approach delay (s)/LOS	47.5	/	D	95.8	/	F	32.0	/	C	101.0	/	F
Intersection delay (s)/ LOS	84.1			/						F		

CHAPTER 16 - OPERATIONAL ANALYSIS - SUMMARY WORKSHEET

General Information		***Site Information***		
Analyst	JAS	Jurisdiction/Date	PCDOT	12/31/2003
Agency or Company	CEI	EB/WB Street	River Road	
Analysis Period/Year	PM 2010	NB/SB Street	Craycroft Road	
Comment	Analysis 19			

Intersection Data

Area type: Others | Analysis period: 0.25 h | Signal type: Pretimed | % Back of queue: 95

	EB			WB			NB			SB		
	LT	TH	RT	LT	TH	RT	LT	TH	RT	LT	TH	RT
Volume (veh/h)	61	537	103	317	219	44	300	974	390	128	595	19
RTOR volume (veh/h)			56			23			210			11
Peak-hour factor	0.92	0.92	0.92	0.92	0.92	0.92	0.92	0.92	0.92	0.92	0.92	0.92
Heavy vehicles (%)	2	2	2	2	2	2	2	2	2	2	2	2
Start-up lost time, l_1 (s)	2.0	2.0	2.0	2.0	2.0	2.0	2.0	2.0	2.0	2.0	2.0	2.0
Extension of effective green, e (s)	2.0	2.0	2.0	2.0	2.0	2.0	2.0	2.0	2.0	2.0	2.0	2.0
Arrival type, AT	4	4	4	4	4	4	4	4	4	4	4	4
Approach pedestrian volume (p/h)	5			5			5			5		
Approach bicycle volume (bic/h)	2			2			2			2		
Left/right parking (Y or N)	N	/	N	N	/	N	N	/	N	N	/	N

Signal Phasing Plan

L: LT T: TH R: RT P: Peds

	Phase 1	Phase 2	Phase 3	Phase 4	Phase 5	Phase 6	Phase 7	Phase 8
Green (s)	35.0	14.0	35.0	12.0				
Yellow + All red (s)	6.0	6.0	6.0	6.0				

Cycle (s): 120.0 | Lost time per cycle (s): 24.0 | Critical v/c Ratio: 0.993

Intersection Performance

	EB			WB			NB			SB		
Lane group configuration	L	T	R	L	T	R	L	T	R	L	T	R
No. of lanes	1	2	1	1	2	1	1	2	1	1	2	1
Flow rate (veh/h)	66	584	112	345	238	48	326	1059	424	139	647	21
Capacity (veh/h)	622	1034	453	462	1034	453	407	1034	453	328	1034	453
Adjusted saturation flow (veh/h)	1770	3547	1554	1770	3547	1554	1770	3547	1554	1770	3547	1554
v/c ratio	0.107	0.564	0.247	0.746	0.230	0.106	0.800	1.023	0.935	0.425	0.625	0.046
g/C ratio	0.458	0.292	0.292	0.458	0.292	0.292	0.442	0.292	0.292	0.442	0.292	0.292
Average back of queue (veh)	1.0	9.1	2.8	9.0	3.1	1.1	9.3	27.4	18.5	2.8	10.6	0.5
Initial queue in next period (veh)								3.2				
Uniform delay (s)	18.7	36.0	32.4	37.4	32.3	31.1	40.8	42.5	41.4	43.6	36.8	30.5
Incremental delay (s)	0.3	2.2	1.3	10.5	0.5	0.5	15.1	34.1	28.8	4.0	2.9	0.2
Initial queue delay (s)	0.0	0.0	0.0	0.0	0.0	0.0	0.0	0.0	0.0	0.0	0.0	0.0
Delay (s)	15.8	38.0	33.5	41.4	32.5	31.3	49.6	76.3	69.9	41.0	39.4	30.5
LOS	B	D	C	D	C	C	D	E	E	D	D	C
Approach delay (s)/LOS	35.4	/	D	37.3	/	D	70.0	/	E	39.5	/	D
Intersection delay (s)/ LOS	52.1			/			D					

CHAPTER 16 - OPERATIONAL ANALYSIS - SUMMARY WORKSHEET

General Information

Analyst	JAS
Agency or Company	CEI
Analysis Period/Year	AM 2010
Comment	Analysis 20

Site Information

Jurisdiction/Date	PCDOT	12/31/2003
EB/WB Street	River Road	
NB/SB Street	Craycroft Road	

Intersection Data

Area type Others Analysis period 0.25 h Signal type Pretimed % Back of queue 95

	EB			WB			NB			SB		
	LT	TH	RT	LT	TH	RT	LT	TH	RT	LT	TH	RT
Volume (veh/h)	96	326	77	648	560	79	65	312	40	165	1247	58
RTOR volume (veh/h)			41			42			21			32
Peak-hour factor	0.92	0.92	0.92	0.92	0.92	0.92	0.92	0.92	0.92	0.92	0.92	0.92
Heavy vehicles (%)	2	2	2	2	2	2	2	2	2	2	2	2
Start-up lost time, l_1 (s)	2.0	2.0	2.0	2.0	2.0	2.0	2.0	2.0	2.0	2.0	2.0	2.0
Extension of effective green, e (s)	2.0	2.0	2.0	2.0	2.0	2.0	2.0	2.0	2.0	2.0	2.0	2.0
Arrival type, AT	4	4	4	4	4	4	4	4	4	4	4	4
Approach pedestrian volume (p/h)	5			5			5			5		
Approach bicycle volume (bic/h)	2			2			2			2		
Left/right parking (Y or N)	N	/	N	N	/	N	N	/	N	N	/	N

Signal Phasing Plan

L: LT T: TH R: RT P: Peds

	Phase 1	Phase 2	Phase 3	Phase 4	Phase 5	Phase 6	Phase 7	Phase 8
Green (s)	20.4	24.3	45.2	6.2				
Yellow + All red (s)	6.0	6.0	6.0	6.0				

Cycle (s) 120.1 Lost time per cycle (s) 24.0 Critical v/c Ratio 1.013

Intersection Performance

	EB			WB			NB			SB		
Lane group configuration	L	T	R	L	T	R	L	T	R	L	T	R
No. of lanes	1	2	1	2	2	1	1	2	1	2	2	1
Flow rate (veh/h)	104	354	84	704	609	86	71	339	43	179	1355	63
Capacity (veh/h)	358	602	263	695	602	263	91	1335	586	177	1335	586
Adjusted saturation flow (veh/h)	1770	3547	1547	3437	3547	1549	1770	3547	1556	3437	3547	1556
v/c ratio	0.291	0.588	0.319	1.013	1.010	0.326	0.773	0.254	0.074	1.011	1.015	0.108
g/C ratio	0.202	0.170	0.170	0.202	0.170	0.170	0.052	0.376	0.376	0.052	0.376	0.376
Average back of queue (veh)	3.0	6.4	2.6	18.0	15.9	2.7	3.0	3.8	0.8	4.9	34.4	1.2
Initial queue in next period (veh)				1.2	0.8					0.2	2.7	
Uniform delay (s)	40.6	46.0	43.7	47.9	49.9	43.8	56.3	25.8	24.0	57.0	37.5	24.3
Incremental delay (s)	2.1	4.2	3.2	37.4	39.3	3.3	46.3	0.5	0.2	70.4	28.5	0.4
Initial queue delay (s)	0.0	0.0	0.0	0.0	0.0	0.0	0.0	0.0	0.0	0.0	0.0	0.0
Delay (s)	42.7	50.2	46.9	85.3	89.2	47.1	102.6	24.2	22.3	127.4	62.9	22.8
LOS	D	D	D	F	F	D	F	C	C	F	E	C
Approach delay (s)/LOS	48.2	/	D	84.6	/	F	36.3	/	D	68.6	/	E
Intersection delay (s)/ LOS	67.8			/						E		

CHAPTER 16 - OPERATIONAL ANALYSIS - SUMMARY WORKSHEET

General Information		***Site Information***		
Analyst	JAS	Jurisdiction/Date	PCDOT	12/31/2003
Agency or Company	CEI	EB/WB Street	River Road	
Analysis Period/Year	PM 2010	NB/SB Street	Craycroft Road	
Comment	Analysis 20			

Intersection Data

Area type Others Analysis period 0.25 h Signal type Pretimed % Back of queue 95

	EB			WB			NB			SB		
	LT	TH	RT	LT	TH	RT	LT	TH	RT	LT	TH	RT
Volume (veh/h)	61	537	103	317	219	44	300	974	390	128	595	19
RTOR volume (veh/h)			56			23			210			11
Peak-hour factor	0.92	0.92	0.92	0.92	0.92	0.92	0.92	0.92	0.92	0.92	0.92	0.92
Heavy vehicles (%)	2	2	2	2	2	2	2	2	2	2	2	2
Start-up lost time, l_1 (s)	2.0	2.0	2.0	2.0	2.0	2.0	2.0	2.0	2.0	2.0	2.0	2.0
Extension of effective green, e (s)	2.0	2.0	2.0	2.0	2.0	2.0	2.0	2.0	2.0	2.0	2.0	2.0
Arrival type, AT	4	4	4	4	4	4	4	4	4	4	4	4
Approach pedestrian volume (p/h)	5			5			5			5		
Approach bicycle volume (bic/h)	2			2			2			2		
Left/right parking (Y or N)	N	/	N	N	/	N	N	/	N	N	/	N

Signal Phasing Plan

L: LT T: TH R: RT P: Peds

	Phase 1	Phase 2	Phase 3	Phase 4	Phase 5	Phase 6	Phase 7	Phase 8
Green (s)	21.2	12.8	38.4	23.6				
Yellow + All red (s)	6.0	6.0	6.0	6.0				

Cycle (s) 120.0 Lost time per cycle (s) 24.0 Critical v/c Ratio 0.935

Intersection Performance

	EB			WB			NB			SB		
Lane group configuration	L	T	R	L	T	R	L	T	R	L	T	R
No. of lanes	1	2	1	2	2	1	1	2	1	2	2	1
Flow rate (veh/h)	66	584	112	345	238	48	326	1059	424	139	647	21
Capacity (veh/h)	189	627	273	367	627	274	348	1135	498	676	1135	498
Adjusted saturation flow (veh/h)	1770	3547	1547	3437	3547	1549	1770	3547	1555	3437	3547	1555
v/c ratio	0.351	0.932	0.410	0.940	0.380	0.175	0.937	0.933	0.852	0.206	0.570	0.042
g/C ratio	0.107	0.177	0.177	0.107	0.177	0.177	0.197	0.320	0.320	0.197	0.320	0.320
Average back of queue (veh)	2.2	13.8	3.5	8.3	3.9	1.4	14.7	23.7	16.3	2.0	9.8	0.4
Initial queue in next period (veh)												
Uniform delay (s)	49.7	48.7	43.8	53.2	43.6	42.0	47.5	39.5	38.1	40.4	33.9	28.1
Incremental delay (s)	5.1	22.6	4.5	34.0	1.7	1.4	34.6	14.8	16.7	0.7	2.1	0.2
Initial queue delay (s)	0.0	0.0	0.0	0.0	0.0	0.0	0.0	0.0	0.0	0.0	0.0	0.0
Delay (s)	54.8	71.3	48.3	87.2	45.3	43.4	82.1	53.2	53.7	41.1	35.0	27.5
LOS	D	E	D	F	D	D	F	D	D	D	C	C
Approach delay (s)/LOS	66.5	/	E	68.1	/	E	58.5	/	E	35.9	/	D
Intersection delay (s)/ LOS	57.0			/			E					

CHAPTER 16 - OPERATIONAL ANALYSIS - SUMMARY WORKSHEET

General Information		Site Information		
Analyst	JAS	Jurisdiction/Date	PCDOT	12/31/2003
Agency or Company	CEI	EB/WB Street	River Road	
Analysis Period/Year	AM 2015	NB/SB Street	Craycroft Road	
Comment	Analysis 21			

Intersection Data

Area type: Others Analysis period: 0.25 h Signal type: Pretimed % Back of queue: 95

	EB			WB			NB			SB		
	LT	TH	RT	LT	TH	RT	LT	TH	RT	LT	TH	RT
Volume (veh/h)	100	340	80	669	617	83	69	332	42	176	1328	62
RTOR volume (veh/h)			43			45			22			34
Peak-hour factor	0.92	0.92	0.92	0.92	0.92	0.92	0.92	0.92	0.92	0.92	0.92	0.92
Heavy vehicles (%)	2	2	2	2	2	2	2	2	2	2	2	2
Start-up lost time, l_1 (s)	2.0	2.0	2.0	2.0	2.0	2.0	2.0	2.0	2.0	2.0	2.0	2.0
Extension of effective green, e (s)	2.0	2.0	2.0	2.0	2.0	2.0	2.0	2.0	2.0	2.0	2.0	2.0
Arrival type, AT	4	4	4	4	4	4	4	4	4	4	4	4
Approach pedestrian volume (p/h)	5			5			5			5		
Approach bicycle volume (bic/h)	2			2			2			2		
Left/right parking (Y or N)	N	/	N	N	/	N	N	/	N	N	/	N

Signal Phasing Plan

L: LT T: TH R: RT P: Peds

	Phase 1	Phase 2	Phase 3	Phase 4	Phase 5	Phase 6	Phase 7	Phase 8
Green (s)	21.0	23.6	45.3	6.2				
Yellow + All red (s)	6.0	6.0	6.0	6.0				

Cycle (s): 120.1 Lost time per cycle (s): 24.0 Critical v/c Ratio: 1.079

Intersection Performance

	EB			WB			NB			SB		
Lane group configuration	L	T	R	L	T	R	L	T	R	L	T	R
No. of lanes	1	2	1	2	2	1	1	2	1	2	2	1
Flow rate (veh/h)	109	370	87	727	671	90	75	361	46	191	1443	67
Capacity (veh/h)	348	620	271	675	620	271	91	1338	587	177	1338	587
Adjusted saturation flow (veh/h)	1770	3547	1547	3437	3547	1549	1770	3547	1556	3437	3547	1556
v/c ratio	0.313	0.596	0.321	1.077	1.081	0.333	0.821	0.270	0.078	1.078	1.079	0.115
g/C ratio	0.197	0.175	0.175	0.197	0.175	0.175	0.052	0.377	0.377	0.052	0.377	0.377
Average back of queue (veh)	3.2	6.7	2.7	20.1	19.0	2.8	3.3	4.0	0.9	5.6	40.4	1.3
Initial queue in next period (veh)				6.7	6.6					1.8	13.9	
Uniform delay (s)	41.3	45.6	43.3	48.3	49.6	43.4	56.4	25.9	24.0	57.0	37.4	24.3
Incremental delay (s)	2.3	4.2	3.1	57.2	60.1	3.3	54.1	0.5	0.3	90.0	48.9	0.4
Initial queue delay (s)	0.0	0.0	0.0	0.0	0.0	0.0	0.0	0.0	0.0	0.0	0.0	0.0
Delay (s)	43.6	49.8	46.4	105.5	109.7	46.7	110.5	24.3	22.3	146.9	83.2	22.8
LOS	D	D	D	F	F	D	F	C	C	F	F	C
Approach delay (s)/LOS	48.1	/	D	103.8	/	F	37.5	/	D	88.0	/	F
Intersection delay (s)/ LOS	82.5				/					F		

CHAPTER 16 - OPERATIONAL ANALYSIS - SUMMARY WORKSHEET

General Information

Analyst	JAS		
Agency or Company	CEI		
Analysis Period/Year	PM	2015	
Comment	Analysis 21		

Site Information

Jurisdiction/Date	PCDOT	12/31/2003
EB/WB Street	River Road	
NB/SB Street	Craycroft Road	

Intersection Data

Area type: Others Analysis period: 0.25 h Signal type: Pretimed % Back of queue: 95

	EB			WB			NB			SB		
	LT	TH	RT	LT	TH	RT	LT	TH	RT	LT	TH	RT
Volume (veh/h)	63	560	108	337	233	46	320	1038	415	136	634	21
RTOR volume (veh/h)			58			25			224			11
Peak-hour factor	0.92	0.92	0.92	0.92	0.92	0.92	0.92	0.92	0.92	0.92	0.92	0.92
Heavy vehicles (%)	2	2	2	2	2	2	2	2	2	2	2	2
Start-up lost time, l_1 (s)	2.0	2.0	2.0	2.0	2.0	2.0	2.0	2.0	2.0	2.0	2.0	2.0
Extension of effective green, e (s)	2.0	2.0	2.0	2.0	2.0	2.0	2.0	2.0	2.0	2.0	2.0	2.0
Arrival type, AT	4	4	4	4	4	4	4	4	4	4	4	4
Approach pedestrian volume (p/h)	5			5			5			5		
Approach bicycle volume (bic/h)	2			2			2			2		
Left/right parking (Y or N)	N	/	N	N	/	N	N	/	N	N	/	N

Signal Phasing Plan

L: LT T: TH R: RT P: Peds

	Phase 1	Phase 2	Phase 3	Phase 4	Phase 5	Phase 6	Phase 7	Phase 8
Green (s)	20.8	13.0	38.5	23.8				
Yellow + All red (s)	6.0	6.0	6.0	6.0				

Cycle (s): 120.1 Lost time per cycle (s): 24.0 Critical v/c Ratio: 0.991

Intersection Performance

	EB			WB			NB			SB		
Lane group configuration	L	T	R	L	T	R	L	T	R	L	T	R
No. of lanes	1	2	1	2	2	1	1	2	1	2	2	1
Flow rate (veh/h)	68	609	117	366	253	50	348	1128	451	148	689	23
Capacity (veh/h)	192	614	268	372	614	268	351	1137	498	681	1137	498
Adjusted saturation flow (veh/h)	1770	3547	1547	3437	3547	1549	1770	3547	1555	3437	3547	1555
v/c ratio	0.357	0.991	0.438	0.985	0.412	0.186	0.992	0.992	0.905	0.217	0.606	0.046
g/C ratio	0.108	0.173	0.173	0.108	0.173	0.173	0.198	0.321	0.321	0.198	0.321	0.321
Average back of queue (veh)	2.3	15.5	3.8	9.3	4.2	1.5	16.8	27.9	18.7	2.2	10.8	0.5
Initial queue in next period (veh)												
Uniform delay (s)	49.7	49.6	44.4	53.5	44.2	42.4	48.1	40.7	39.0	40.3	34.4	28.1
Incremental delay (s)	5.1	34.2	5.1	43.0	2.0	1.5	46.1	24.9	22.5	0.7	2.4	0.2
Initial queue delay (s)	0.0	0.0	0.0	0.0	0.0	0.0	0.0	0.0	0.0	0.0	0.0	0.0
Delay (s)	54.8	83.8	49.5	96.5	46.2	43.9	94.2	64.3	60.4	41.0	35.8	27.5
LOS	D	F	D	F	D	D	F	E	E	D	D	C
Approach delay (s)/LOS	76.2	/	E	73.5	/	E	68.8	/	E	36.4	/	D
Intersection delay (s)/ LOS	64.4			/						E		

CHAPTER 16 - OPERATIONAL ANALYSIS - SUMMARY WORKSHEET

General Information		***Site Information***		
Analyst	JAS	Jurisdiction/Date	PCDOT	12/31/2003
Agency or Company	CEI	EB/WB Street	River Road	
Analysis Period/Year	AM 2020	NB/SB Street	Craycroft Road	
Comment	Analysis 22			

Intersection Data

Area type: Others Analysis period: 0.25 h Signal type: Pretimed % Back of queue: 95

	EB			WB			NB			SB		
	LT	TH	RT	LT	TH	RT	LT	TH	RT	LT	TH	RT
Volume (veh/h)	103	351	82	684	661	87	72	347	44	184	1389	66
RTOR volume (veh/h)			44			47			23			35
Peak-hour factor	0.92	0.92	0.92	0.92	0.92	0.92	0.92	0.92	0.92	0.92	0.92	0.92
Heavy vehicles (%)	2	2	2	2	2	2	2	2	2	2	2	2
Start-up lost time, l_1 (s)	2.0	2.0	2.0	2.0	2.0	2.0	2.0	2.0	2.0	2.0	2.0	2.0
Extension of effective green, e (s)	2.0	2.0	2.0	2.0	2.0	2.0	2.0	2.0	2.0	2.0	2.0	2.0
Arrival type, AT	4	4	4	4	4	4	4	4	4	4	4	4
Approach pedestrian volume (p/h)	5			5			5			5		
Approach bicycle volume (bic/h)	2			2			2			2		
Left/right parking (Y or N)	N	/	N	N	/	N	N	/	N	N	/	N

Signal Phasing Plan

L: LT T: TH R: RT P: Peds

	Phase 1	Phase 2	Phase 3	Phase 4	Phase 5	Phase 6	Phase 7	Phase 8
Green (s)	21.6	23.0	45.3	6.2				
Yellow + All red (s)	6.0	6.0	6.0	6.0				

Cycle (s): 120.1 Lost time per cycle (s): 24.0 Critical v/c Ratio: 1.128

Intersection Performance

	EB			WB			NB			SB		
Lane group configuration	L	T	R	L	T	R	L	T	R	L	T	R
No. of lanes	1	2	1	2	2	1	1	2	1	2	2	1
Flow rate (veh/h)	112	382	89	743	718	95	78	377	48	200	1510	72
Capacity (veh/h)	339	638	278	658	638	279	91	1338	587	177	1338	587
Adjusted saturation flow (veh/h)	1770	3547	1548	3437	3547	1549	1770	3547	1556	3437	3547	1556
v/c ratio	0.330	0.598	0.320	1.130	1.126	0.340	0.857	0.282	0.081	1.127	1.129	0.122
g/C ratio	0.192	0.180	0.180	0.192	0.180	0.180	0.052	0.377	0.377	0.052	0.377	0.377
Average back of queue (veh)	3.4	6.9	2.7	21.9	21.5	2.9	3.6	4.3	0.9	6.1	45.5	1.4
Initial queue in next period (veh)				11.0	10.6					2.9	22.6	
Uniform delay (s)	41.9	45.3	42.9	48.6	49.3	43.0	56.5	26.1	24.0	57.0	37.4	24.4
Incremental delay (s)	2.6	4.1	3.0	76.5	75.8	3.3	60.7	0.5	0.3	105.9	67.9	0.4
Initial queue delay (s)	0.0	0.0	0.0	0.0	0.0	0.0	0.0	0.0	0.0	0.0	0.0	0.0
Delay (s)	44.5	49.4	45.9	125.1	125.0	46.3	117.2	24.4	22.4	162.9	102.2	22.8
LOS	D	D	D	F	F	D	F	C	C	F	F	C
Approach delay (s)/LOS	47.9	/	D	120.3	/	F	38.7	/	D	105.8	/	F
Intersection delay (s)/ LOS	95.6				/					F		

CHAPTER 16 - OPERATIONAL ANALYSIS - SUMMARY WORKSHEET

General Information		***Site Information***		
Analyst	JAS	Jurisdiction/Date	PCDOT	12/31/2003
Agency or Company	CEI	EB/WB Street	River Road	
Analysis Period/Year	PM 2020	NB/SB Street	Craycroft Road	
Comment	Analysis 22			

Intersection Data

Area type Others Analysis period 0.25 h Signal type Pretimed % Back of queue 95

	EB			WB			NB			SB		
	LT	TH	RT	LT	TH	RT	LT	TH	RT	LT	TH	RT
Volume (veh/h)	65	577	111	353	244	49	334	1085	434	143	663	22
RTOR volume (veh/h)			60			26			234			12
Peak-hour factor	0.92	0.92	0.92	0.92	0.92	0.92	0.92	0.92	0.92	0.92	0.92	0.92
Heavy vehicles (%)	2	2	2	2	2	2	2	2	2	2	2	2
Start-up lost time, l_1 (s)	2.0	2.0	2.0	2.0	2.0	2.0	2.0	2.0	2.0	2.0	2.0	2.0
Extension of effective green, e (s)	2.0	2.0	2.0	2.0	2.0	2.0	2.0	2.0	2.0	2.0	2.0	2.0
Arrival type, AT	4	4	4	4	4	4	4	4	4	4	4	4
Approach pedestrian volume (p/h)	5			5			5			5		
Approach bicycle volume (bic/h)	2			2			2			2		
Left/right parking (Y or N)	N	/	N	N	/	N	N	/	N	N	/	N

Signal Phasing Plan

L: LT T: TH R: RT P: Peds

	Phase 1	Phase 2	Phase 3	Phase 4	Phase 5	Phase 6	Phase 7	Phase 8
Green (s)	20.6	13.0	38.7	23.8				
Yellow + All red (s)	6.0	6.0	6.0	6.0				

Cycle (s) 120.1 Lost time per cycle (s) 24.0 Critical v/c Ratio 1.032

Intersection Performance

	EB			WB			NB			SB		
Lane group configuration	L	T	R	L	T	R	L	T	R	L	T	R
No. of lanes	1	2	1	2	2	1	1	2	1	2	2	1
Flow rate (veh/h)	71	627	121	384	265	53	363	1179	472	155	721	24
Capacity (veh/h)	192	608	265	372	608	266	351	1143	501	681	1143	501
Adjusted saturation flow (veh/h)	1770	3547	1547	3437	3547	1549	1770	3547	1555	3437	3547	1555
v/c ratio	0.369	1.031	0.455	1.031	0.436	0.201	1.035	1.032	0.941	0.228	0.631	0.048
g/C ratio	0.108	0.172	0.172	0.108	0.172	0.172	0.198	0.322	0.322	0.198	0.322	0.322
Average back of queue (veh)	2.4	16.8	3.9	10.3	4.5	1.6	18.5	30.8	20.6	2.3	11.5	0.5
Initial queue in next period (veh)		2.5		1.5			3.1	4.8				
Uniform delay (s)	49.7	49.8	44.7	53.6	44.5	42.7	48.2	40.7	39.6	40.4	34.6	28.0
Incremental delay (s)	5.4	44.7	5.5	55.0	2.3	1.7	57.5	35.2	28.0	0.8	2.6	0.2
Initial queue delay (s)	0.0	0.0	0.0	0.0	0.0	0.0	0.0	0.0	0.0	0.0	0.0	0.0
Delay (s)	55.1	94.5	50.2	108.6	46.8	44.4	105.7	74.6	66.3	41.2	36.1	27.3
LOS	E	F	D	F	D	D	F	E	E	D	D	C
Approach delay (s)/LOS	84.5	/	F	80.4	/	F	78.3	/	E	36.8	/	D
Intersection delay (s)/ LOS	71.3					/			E			

CHAPTER 16 - OPERATIONAL ANALYSIS - SUMMARY WORKSHEET

General Information		Site Information		
Analyst	JAS	Jurisdiction/Date	PCDOT	12/31/2003
Agency or Company	CEI	EB/WB Street	River Road	
Analysis Period/Year	AM 2025	NB/SB Street	Craycroft Road	
Comment	Analysis 23			

Intersection Data

Area type: Others Analysis period: 0.25 h Signal type: Pretimed % Back of queue: 95

	EB			WB			NB			SB		
	LT	TH	RT	LT	TH	RT	LT	TH	RT	LT	TH	RT
Volume (veh/h)	106	361	84	700	704	91	75	362	45	192	1450	68
RTOR volume (veh/h)			46			49			25			37
Peak-hour factor	0.92	0.92	0.92	0.92	0.92	0.92	0.92	0.92	0.92	0.92	0.92	0.92
Heavy vehicles (%)	2	2	2	2	2	2	2	2	2	2	2	2
Start-up lost time, l_1 (s)	2.0	2.0	2.0	2.0	2.0	2.0	2.0	2.0	2.0	2.0	2.0	2.0
Extension of effective green, e (s)	2.0	2.0	2.0	2.0	2.0	2.0	2.0	2.0	2.0	2.0	2.0	2.0
Arrival type, AT	4	4	4	4	4	4	4	4	4	4	4	4
Approach pedestrian volume (p/h)	5			5			5			5		
Approach bicycle volume (bic/h)	2			2			2			2		
Left/right parking (Y or N)	N	/	N	N	/	N	N	/	N	N	/	N

Signal Phasing Plan

L: LT T: TH R: RT P: Peds

	Phase 1	Phase 2	Phase 3	Phase 4	Phase 5	Phase 6	Phase 7	Phase 8
Green (s)	22.2	22.8	45.7	6.3				
Yellow + All red (s)	5.0	6.0	6.0	6.0				

Cycle (s): 120.0 Lost time per cycle (s): 23.0 Critical v/c Ratio: 1.166

Intersection Performance

	EB			WB			NB			SB		
Lane group configuration	L	T	R	L	T	R	L	T	R	L	T	R
No. of lanes	1	2	1	2	2	1	1	2	1	2	2	1
Flow rate (veh/h)	115	392	91	761	765	99	82	393	49	209	1576	74
Capacity (veh/h)	336	656	286	653	656	287	93	1351	593	180	1351	593
Adjusted saturation flow (veh/h)	1770	3547	1548	3437	3547	1549	1770	3547	1556	3437	3547	1556
v/c ratio	0.343	0.598	0.319	1.165	1.166	0.345	0.877	0.291	0.083	1.157	1.167	0.125
g/C ratio	0.190	0.185	0.185	0.190	0.185	0.185	0.052	0.381	0.381	0.052	0.381	0.381
Average back of queue (veh)	3.5	7.0	2.8	23.4	24.0	3.0	3.8	4.4	0.9	6.6	50.3	1.4
Initial queue in next period (veh)				13.9	14.3					3.6	29.6	
Uniform delay (s)	42.1	44.8	42.4	48.6	48.9	42.6	56.5	25.9	23.7	56.9	37.1	24.1
Incremental delay (s)	2.8	4.0	2.9	90.4	90.7	3.3	64.1	0.5	0.3	115.5	83.5	0.4
Initial queue delay (s)	0.0	0.0	0.0	0.0	0.0	0.0	0.0	0.0	0.0	0.0	0.0	0.0
Delay (s)	44.9	48.8	45.3	139.0	139.6	45.9	120.6	24.2	22.0	172.3	117.5	22.5
LOS	D	D	D	F	F	D	F	C	C	F	F	C
Approach delay (s)/LOS	47.5	/	D	133.6	/	F	39.0	/	D	119.9	/	F
Intersection delay (s)/ LOS	106.1			/			F					

CHAPTER 16 - OPERATIONAL ANALYSIS - SUMMARY WORKSHEET

General Information		Site Information		
Analyst	JAS	Jurisdiction/Date	PCDOT	12/31/2003
Agency or Company	CEI	EB/WB Street	River Road	
Analysis Period/Year	PM 2025	NB/SB Street	Craycroft Road	
Comment	Analysis 23			

Intersection Data

Area type: Others Analysis period: 0.25 h Signal type: Pretimed % Back of queue: 95

	EB			WB			NB			SB		
	LT	TH	RT	LT	TH	RT	LT	TH	RT	LT	TH	RT
Volume (veh/h)	67	594	153	368	255	51	349	1133	447	149	692	23
RTOR volume (veh/h)			23			27			250			12
Peak-hour factor	0.92	0.92	0.92	0.92	0.92	0.92	0.92	0.92	0.92	0.92	0.92	0.92
Heavy vehicles (%)	2	2	2	2	2	2	2	2	2	2	2	2
Start-up lost time, l_1 (s)	2.0	2.0	2.0	2.0	2.0	2.0	2.0	2.0	2.0	2.0	2.0	2.0
Extension of effective green, e (s)	2.0	2.0	2.0	2.0	2.0	2.0	2.0	2.0	2.0	2.0	2.0	2.0
Arrival type, AT	4	4	4	4	4	4	4	4	4	4	4	4
Approach pedestrian volume (p/h)	5			5			5			5		
Approach bicycle volume (bic/h)	2			2			2			2		
Left/right parking (Y or N)	N	/	N	N	/	N	N	/	N	N	/	N

Signal Phasing Plan

L: LT T: TH R: RT P: Peds

	Phase 1	Phase 2	Phase 3	Phase 4	Phase 5	Phase 6	Phase 7	Phase 8
Green (s)	20.3	12.9	38.7	23.9				
Yellow + All red (s)	6.0	6.0	6.0	6.0				

Cycle (s): 119.8 Lost time per cycle (s): 24.0 Critical v/c Ratio: 1.076

Intersection Performance

	EB			WB			NB			SB		
Lane group configuration	L	T	R	L	T	R	L	T	R	L	T	R
No. of lanes	1	2	1	2	2	1	1	2	1	2	2	1
Flow rate (veh/h)	73	646	166	400	277	55	379	1232	486	162	752	25
Capacity (veh/h)	191	601	262	370	601	262	353	1146	502	686	1146	502
Adjusted saturation flow (veh/h)	1770	3547	1547	3437	3547	1549	1770	3547	1555	3437	3547	1555
v/c ratio	0.382	1.074	0.634	1.081	0.461	0.211	1.075	1.075	0.967	0.236	0.657	0.050
g/C ratio	0.108	0.169	0.169	0.108	0.169	0.169	0.199	0.323	0.323	0.199	0.323	0.323
Average back of queue (veh)	2.5	18.2	5.9	11.3	4.7	1.6	20.3	34.1	22.1	2.4	12.2	0.5
Initial queue in next period (veh)		5.9		3.9			6.6	11.3				
Uniform delay (s)	49.7	49.8	46.3	53.5	44.8	42.9	48.0	40.5	39.9	40.3	34.8	27.9
Incremental delay (s)	5.7	58.3	11.2	70.2	2.5	1.8	69.2	49.2	32.8	0.8	2.9	0.2
Initial queue delay (s)	0.0	0.0	0.0	0.0	0.0	0.0	0.0	0.0	0.0	0.0	0.0	0.0
Delay (s)	55.4	108.1	57.5	123.7	47.3	44.7	117.2	88.4	71.4	41.1	36.6	27.2
LOS	E	F	E	F	D	D	F	F	E	D	D	C
Approach delay (s)/LOS	94.2	/	F	88.8	/	F	89.7	/	F	37.1	/	D
Intersection delay (s)/ LOS	79.8			/						E		

CHAPTER 16 - OPERATIONAL ANALYSIS - SUMMARY WORKSHEET

General Information		Site Information		
Analyst	JAS	Jurisdiction/Date	PCDOT	12/31/2003
Agency or Company	CEI	EB/WB Street	Territory Drive	
Analysis Period/Year	AM 2003	NB/SB Street	Craycroft Road	
Comment	Analysis 25			

Intersection Data

Area type: Others Analysis period: 0.25 h Signal type: Pretimed % Back of queue: 95

	EB			WB			NB			SB		
	LT	TH	RT	LT	TH	RT	LT	TH	RT	LT	TH	RT
Volume (veh/h)	7	1	15	182	0	22	6	336	20	6	594	1
RTOR volume (veh/h)			4			6			5			1
Peak-hour factor	0.92	0.92	0.92	0.92	0.92	0.92	0.92	0.92	0.92	0.92	0.92	0.92
Heavy vehicles (%)	2	2	2	2	2	2	2	2	2	2	2	2
Start-up lost time, l_1 (s)	2.0	2.0	2.0	2.0	2.0	2.0	2.0	2.0	2.0	2.0	2.0	2.0
Extension of effective green, e (s)	2.0	2.0	2.0	2.0	2.0	2.0	2.0	2.0	2.0	2.0	2.0	2.0
Arrival type, AT	3	3		3	3		4	4		4	4	
Approach pedestrian volume (p/h)	5			5			5			5		
Approach bicycle volume (bic/h)	2			2			2			2		
Left/right parking (Y or N)	N	/	N	N	/	N	N	/	N	N	/	N

Signal Phasing Plan

L: LT T: TH R: RT P: Peds

	Phase 1	Phase 2	Phase 3	Phase 4	Phase 5	Phase 6	Phase 7	Phase 8
	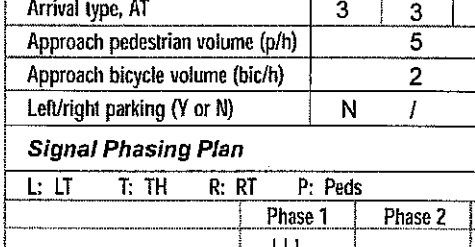							
Green (s)	32.0	16.0						
Yellow + All red (s)	6.0	6.0						

Cycle (s): 60.0 Lost time per cycle (s): 12.0 Critical v/c Ratio: 0.613

Intersection Performance

	EB			WB			NB			SB		
Lane group configuration	L	TR		L	TR		L	TR		L	TR	
No. of lanes	1	1		1	1		1	1		1	1	
Flow rate (veh/h)	8	17		198	24		7	387		7	647	
Capacity (veh/h)	366	415		368	410		338	984		528	993	
Adjusted saturation flow (veh/h)	1372	1558		1381	1538		634	1844		990	1862	
v/c ratio	0.021	0.042		0.537	0.058		0.019	0.393		0.012	0.651	
g/C ratio	0.267	0.267		0.267	0.267		0.533	0.533		0.533	0.533	
Average back of queue (veh)	0.1	0.2		3.3	0.3		0.0	3.1		0.0	7.3	
Initial queue in next period (veh)												
Uniform delay (s)	16.2	16.3		18.8	16.4		6.6	8.3		6.6	10.0	
Incremental delay (s)	0.1	0.2		5.5	0.3		0.1	1.2		0.0	3.3	
Initial queue delay (s)	0.0	0.0		0.0	0.0		0.0	0.0		0.0	0.0	
Delay (s)	16.3	16.5		24.3	16.7		4.8	7.1		4.7	10.4	
LOS	B	B		C	B		A	A		A	B	
Approach delay (s)/LOS	16.5	/	B	23.5	/	C	7.1	/	A	10.4	/	B
Intersection delay (s)/ LOS	11.7				/					B		

CHAPTER 16 - OPERATIONAL ANALYSIS - SUMMARY WORKSHEET

General Information		Site Information		
Analyst	JAS	Jurisdiction/Date	PCDOT	12/31/2003
Agency or Company	CEI	EB/WB Street	Territory Drive	
Analysis Period/Year	PM 2003	NB/SB Street	Craycroft Road	
Comment	Analysis 25			

Intersection Data

Area type: Others | Analysis period: 0.25 h | Signal type: Pretimed | % Back of queue: 95

	EB			WB			NB			SB		
	LT	TH	RT	LT	TH	RT	LT	TH	RT	LT	TH	RT
Volume (veh/h)	3	1	5	43	0	11	3	632	74	33	451	10
RTOR volume (veh/h)			1			3			30			3
Peak-hour factor	0.92	0.92	0.92	0.92	0.92	0.92	0.92	0.92	0.92	0.92	0.92	0.92
Heavy vehicles (%)	2	2	2	2	2	2	2	2	2	2	2	2
Start-up lost time, l_1 (s)	2.0	2.0	2.0	2.0	2.0	2.0	2.0	2.0	2.0	2.0	2.0	2.0
Extension of effective green, e (s)	2.0	2.0	2.0	2.0	2.0	2.0	2.0	2.0	2.0	2.0	2.0	2.0
Arrival type, AT	3	3		3	3		4	4		4	4	
Approach pedestrian volume (p/h)		5			5			5			5	
Approach bicycle volume (bic/h)		2			2			2			2	
Left/right parking (Y or N)	N	/	N	N	/	N	N	/	N	N	/	N

Signal Phasing Plan

L: LT T: TH R: RT P: Peds

	Phase 1	Phase 2	Phase 3	Phase 4	Phase 5	Phase 6	Phase 7	Phase 8
	↰↓↓↳ ↑↑↑	↳↓↓↰ ↑↑↑						
Green (s)	32.0	16.0						
Yellow + All red (s)	6.0	6.0						

Cycle (s): 60.0 | Lost time per cycle (s): 12.0 | Critical v/c Ratio: 0.567

Intersection Performance

	EB			WB			NB			SB		
Lane group configuration	L	TR		L	TR		L	TR		L	TR	
No. of lanes	1	1		1	1		1	1		1	1	
Flow rate (veh/h)	3	7		47	12		3	767		36	501	
Capacity (veh/h)	370	424		372	410		451	975		242	990	
Adjusted saturation flow (veh/h)	1387	1591		1394	1538		845	1828		455	1856	
v/c ratio	0.009	0.015		0.126	0.029		0.007	0.787		0.148	0.506	
g/C ratio	0.267	0.267		0.267	0.267		0.533	0.533		0.533	0.533	
Average back of queue (veh)	0.0	0.1		0.7	0.2		0.0	11.2		0.2	4.6	
Initial queue in next period (veh)												
Uniform delay (s)	16.2	16.2		16.7	16.3		6.6	11.3		7.1	9.0	
Incremental delay (s)	0.0	0.1		0.7	0.1		0.0	6.4		1.3	1.8	
Initial queue delay (s)	0.0	0.0		0.0	0.0		0.0	0.0		0.0	0.0	
Delay (s)	16.2	16.3		17.4	16.4		4.7	14.4		6.4	8.2	
LOS	B	B		B	B		A	B		A	A	
Approach delay (s)/LOS	16.3	/	B	17.2	/	B	14.4	/	B	8.1	/	A
Intersection delay (s)/ LOS	12.0					/			B			

CHAPTER 16 - OPERATIONAL ANALYSIS - SUMMARY WORKSHEET

General Information		Site Information		
Analyst	JAS	Jurisdiction/Date	PCDOT	12/31/2003
Agency or Company	CEI	EB/WB Street	Territory Drive	
Analysis Period/Year	AM 2005	NB/SB Street	Craycroft Road	
Comment	Analysis 26			

Intersection Data

Area type: Others Analysis period: 0.25 h Signal type: Pretimed % Back of queue: 95

	EB			WB			NB			SB		
	LT	TH	RT	LT	TH	RT	LT	TH	RT	LT	TH	RT
Volume (veh/h)	7	1	18	193	1	26	7	372	-2	7	651	0
RTOR volume (veh/h)			1			3			30			3
Peak-hour factor	0.92	0.92	0.92	0.92	0.92	0.92	0.92	0.92	0.92	0.92	0.92	0.92
Heavy vehicles (%)	2	2	2	2	2	2	2	2	2	2	2	2
Start-up lost time, l_1 (s)	2.0	2.0	2.0	2.0	2.0	2.0	2.0	2.0	2.0	2.0	2.0	2.0
Extension of effective green, e (s)	2.0	2.0	2.0	2.0	2.0	2.0	2.0	2.0	2.0	2.0	2.0	2.0
Arrival type, AT	3	3		3	3		4	4		4	4	
Approach pedestrian volume (p/h)	4			6			6			1		
Approach bicycle volume (bic/h)	2			2			2			2		
Left/right parking (Y or N)	N	/	N	N	/	N	N	/	N	N	/	N

Signal Phasing Plan

L: LT T: TH R: RT P: Peds

	Phase 1	Phase 2	Phase 3	Phase 4	Phase 5	Phase 6	Phase 7	Phase 8
	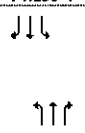	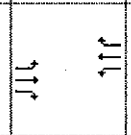						
Green (s)	32.0	16.0						
Yellow + All red (s)	6.0	6.0						

Cycle (s): 60.0 Lost time per cycle (s): 12.0 Critical v/c Ratio: 0.665

Intersection Performance

	EB			WB			NB			SB		
Lane group configuration	L	TR		L	TR		L	TR		L	TR	
No. of lanes	1	1		1	1		1	1		1	1	
Flow rate (veh/h)	8	21		210	29		8	402		8	708	
Capacity (veh/h)	364	415		368	413		291	994		520	993	
Adjusted saturation flow (veh/h)	1364	1557		1378	1548		546	1865		976	1863	
v/c ratio	0.021	0.050		0.571	0.071		0.026	0.404		0.015	0.712	
g/C ratio	0.267	0.267		0.267	0.267		0.533	0.533		0.533	0.533	
Average back of queue (veh)	0.1	0.3		3.6	0.4		0.0	3.3		0.0	8.9	
Initial queue in next period (veh)												
Uniform delay (s)	16.2	16.4		19.0	16.4		6.6	8.3		6.6	10.5	
Incremental delay (s)	0.1	0.2		6.3	0.3		0.2	1.2		0.1	4.3	
Initial queue delay (s)	0.0	0.0		0.0	0.0		0.0	0.0		0.0	0.0	
Delay (s)	16.3	16.6		25.3	16.7		4.9	7.1		4.8	11.8	
LOS	B	B		C	B		A	A		A	B	
Approach delay (s)/LOS	16.5	/	B	24.3	/	C	7.1	/	A	11.7	/	B
Intersection delay (s)/ LOS	12.6				/					B		

CHAPTER 16 - OPERATIONAL ANALYSIS - SUMMARY WORKSHEET

General Information		Site Information		
Analyst	JAS	Jurisdiction/Date	PCDOT	12/31/2003
Agency or Company	CEI	EB/WB Street	Territory Drive	
Analysis Period/Year	PM 2005	NB/SB Street	Craycroft Road	
Comment	Analysis 26			

Intersection Data

Area type: Others Analysis period: 0.25 h Signal type: Pretimed % Back of queue: 95

	EB			WB			NB			SB		
	LT	TH	RT	LT	TH	RT	LT	TH	RT	LT	TH	RT
Volume (veh/h)	3	1	5	45	1	12	3	685	90	36	489	12
RTOR volume (veh/h)			1			3			23			3
Peak-hour factor	0.92	0.92	0.92	0.92	0.92	0.92	0.92	0.92	0.92	0.92	0.92	0.92
Heavy vehicles (%)	2	2	2	2	2	2	2	2	2	2	2	2
Start-up lost time, l_1 (s)	2.0	2.0	2.0	2.0	2.0	2.0	2.0	2.0	2.0	2.0	2.0	2.0
Extension of effective green, e (s)	2.0	2.0	2.0	2.0	2.0	2.0	2.0	2.0	2.0	2.0	2.0	2.0
Arrival type, AT	3	3		3	3		4	4		4	4	
Approach pedestrian volume (p/h)	4			6			6			1		
Approach bicycle volume (bic/h)	2			2			2			2		
Left/right parking (Y or N)	N	/	N	N	/	N	N	/	N	N	/	N

Signal Phasing Plan

L: LT T: TH R: RT P: Peds

	Phase 1	Phase 2	Phase 3	Phase 4	Phase 5	Phase 6	Phase 7	Phase 8
	↰↓↳ ↑↑↱	↰↓↳ ↑↑↱						
Green (s)	32.0	16.0						
Yellow + All red (s)	6.0	6.0						

Cycle (s): 60.0 Lost time per cycle (s): 12.0 Critical v/c Ratio: 0.621

Intersection Performance

	EB			WB			NB			SB		
Lane group configuration	L	TR		L	TR		L	TR		L	TR	
No. of lanes	1	1		1	1		1	1		1	1	
Flow rate (veh/h)	3	7		49	14		3	842		39	545	
Capacity (veh/h)	369	425		372	416		418	973		178	989	
Adjusted saturation flow (veh/h)	1383	1593		1396	1560		783	1825		333	1855	
v/c ratio	0.009	0.015		0.131	0.034		0.008	0.866		0.220	0.550	
g/C ratio	0.267	0.267		0.267	0.267		0.533	0.533		0.533	0.533	
Average back of queue (veh)	0.0	0.1		0.7	0.2		0.0	14.9		0.3	5.3	
Initial queue in next period (veh)												
Uniform delay (s)	16.2	16.2		16.7	16.3		6.6	12.1		7.4	9.2	
Incremental delay (s)	0.0	0.1		0.7	0.2		0.0	10.2		2.8	2.2	
Initial queue delay (s)	0.0	0.0		0.0	0.0		0.0	0.0		0.0	0.0	
Delay (s)	16.2	16.3		17.4	16.5		4.7	18.8		8.1	8.8	
LOS	B	B		B	B		A	B		A	A	
Approach delay (s)/LOS	16.3	/	B	17.2	/	B	18.8	/	B	8.7	/	A
Intersection delay (s)/ LOS	14.8				/					B		

CHAPTER 16 - OPERATIONAL ANALYSIS - SUMMARY WORKSHEET

General Information		Site Information		
Analyst	JAS	Jurisdiction/Date	PCDOT	12/31/2003
Agency or Company	CEI	EB/WB Street	Territory Drive	
Analysis Period/Year	AM 2010	NB/SB Street	Craycroft Road	
Comment	Analysis 27			

Intersection Data

Area type: Others Analysis period: 0.25 h Signal type: Pretimed % Back of queue: 95

	EB			WB			NB			SB		
	LT	TH	RT	LT	TH	RT	LT	TH	RT	LT	TH	RT
Volume (veh/h)	7	1	15	210	3	25	9	425	25	8	736	3
RTOR volume (veh/h)			4			7			7			1
Peak-hour factor	0.92	0.92	0.92	0.92	0.92	0.92	0.92	0.92	0.92	0.92	0.92	0.92
Heavy vehicles (%)	2	2	2	2	2	2	2	2	2	2	2	2
Start-up lost time, l_1 (s)	2.0	2.0	2.0	2.0	2.0	2.0	2.0	2.0	2.0	2.0	2.0	2.0
Extension of effective green, e (s)	2.0	2.0	2.0	2.0	2.0	2.0	2.0	2.0	2.0	2.0	2.0	2.0
Arrival type, AT	3	3		3	3		4	4		4	4	
Approach pedestrian volume (p/h)	4			6			6			1		
Approach bicycle volume (bic/h)	2			2			2			2		
Left/right parking (Y or N)	N	/	N	N	/	N	N	/	N	N	/	N

Signal Phasing Plan

L: LT T: TH R: RT P: Peds

	Phase 1	Phase 2	Phase 3	Phase 4	Phase 5	Phase 6	Phase 7	Phase 8
	↓↓↳ ↑↑↱	↳↳ ↱↱						
Green (s)	32.0	16.0						
Yellow + All red (s)	6.0	6.0						

Cycle (s): 60.0 Lost time per cycle (s): 12.0 Critical v/c Ratio: 0.746

Intersection Performance

	EB			WB			NB			SB		
Lane group configuration	L	TR		L	TR		L	TR		L	TR	
No. of lanes	1	1		1	1		1	1		1	1	
Flow rate (veh/h)	8	17		228	30		10	489		9	803	
Capacity (veh/h)	363	416		369	419		212	984		460	993	
Adjusted saturation flow (veh/h)	1363	1560		1382	1570		398	1844		862	1861	
v/c ratio	0.021	0.042		0.619	0.073		0.046	0.497		0.019	0.809	
g/C ratio	0.267	0.267		0.267	0.267		0.533	0.533		0.533	0.533	
Average back of queue (veh)	0.1	0.2		4.0	0.4		0.1	4.5		0.1	12.3	
Initial queue in next period (veh)												
Uniform delay (s)	16.2	16.3		19.3	16.5		6.7	8.9		6.6	11.5	
Incremental delay (s)	0.1	0.2		7.6	0.3		0.4	1.8		0.1	7.1	
Initial queue delay (s)	0.0	0.0		0.0	0.0		0.0	0.0		0.0	0.0	
Delay (s)	16.3	16.5		26.9	16.8		5.2	8.1		4.8	15.3	
LOS	B	B		C	B		A	A		A	B	
Approach delay (s)/LOS	16.5	/	B	25.7	/	C	8.1	/	A	15.2	/	B
Intersection delay (s)/ LOS	14.7			/						B		

CHAPTER 16 - OPERATIONAL ANALYSIS - SUMMARY WORKSHEET

General Information		Site Information		
Analyst	JAS	Jurisdiction/Date	PCDOT	12/31/2003
Agency or Company	CEI	EB/WB Street	Territory Drive	
Analysis Period/Year	PM 2010	NB/SB Street	Craycroft Road	
Comment	Analysis 27			

Intersection Data

Area type: Others Analysis period: 0.25 h Signal type: Pretimed % Back of queue: 95

	EB			WB			NB			SB		
	LT	TH	RT	LT	TH	RT	LT	TH	RT	LT	TH	RT
Volume (veh/h)	3	1	5	49	3	13	4	764	101	41	546	13
RTOR volume (veh/h)			1			3			25			4
Peak-hour factor	0.92	0.92	0.92	0.92	0.92	0.92	0.92	0.92	0.92	0.92	0.92	0.92
Heavy vehicles (%)	2	2	2	2	2	2	2	2	2	2	2	2
Start-up lost time, l_1 (s)	2.0	2.0	2.0	2.0	2.0	2.0	2.0	2.0	2.0	2.0	2.0	2.0
Extension of effective green, e (s)	2.0	2.0	2.0	2.0	2.0	2.0	2.0	2.0	2.0	2.0	2.0	2.0
Arrival type, AT	3	3		3	3		4	4		4	4	
Approach pedestrian volume (p/h)	4			6			6			1		
Approach bicycle volume (bic/h)	2			2			2			2		
Left/right parking (Y or N)	N	/	N	N	/	N	N	/	N	N	/	N

Signal Phasing Plan

L: LT T: TH R: RT P: Peds

	Phase 1	Phase 2	Phase 3	Phase 4	Phase 5	Phase 6	Phase 7	Phase 8
	↓↓↳ ↑↑↱	↓↓↳ ↑↑↱						
Green (s)	33.0	15.0						
Yellow + All red (s)	6.0	6.0						

Cycle (s): 60.0 Lost time per cycle (s): 12.0 Critical v/c Ratio: 0.692

Intersection Performance

	EB			WB			NB			SB		
Lane group configuration	L	TR		L	TR		L	TR		L	TR	
No. of lanes	1	1		1	1		1	1		1	1	
Flow rate (veh/h)	3	7		53	17		4	940		45	608	
Capacity (veh/h)	345	398		349	399		394	1003		124	1020	
Adjusted saturation flow (veh/h)	1379	1593		1396	1596		716	1824		226	1855	
v/c ratio	0.009	0.016		0.153	0.044		0.011	0.937		0.359	0.595	
g/C ratio	0.250	0.250		0.250	0.250		0.550	0.550		0.550	0.550	
Average back of queue (veh)	0.0	0.1		0.8	0.2		0.0	20.2		0.4	6.0	
Initial queue in next period (veh)												
Uniform delay (s)	16.9	16.9		17.5	17.1		6.1	12.5		7.6	9.0	
Incremental delay (s)	0.0	0.1		0.9	0.2		0.1	16.8		7.9	2.6	
Initial queue delay (s)	0.0	0.0		0.0	0.0		0.0	0.0		0.0	0.0	
Delay (s)	16.9	17.0		18.4	17.3		4.3	25.3		13.1	8.8	
LOS	B	B		B	B		A	C		B	A	
Approach delay (s)/LOS	17.0	/	B	18.2	/	B	25.3	/	C	9.1	/	A
Intersection delay (s)/ LOS	18.6			/			B					

CHAPTER 16 - OPERATIONAL ANALYSIS - SUMMARY WORKSHEET

General Information		Site Information		
Analyst	JAS	Jurisdiction/Date	PCDOT	12/31/2003
Agency or Company	CEI	EB/WB Street	Territory Drive	
Analysis Period/Year	AM 2015	NB/SB Street	Craycroft Road	
Comment	Analysis 28			

Intersection Data

Area type: Others Analysis period: 0.25 h Signal type: Pretimed % Back of queue: 95

	EB			WB			NB			SB		
	LT	TH	RT	LT	TH	RT	LT	TH	RT	LT	TH	RT
Volume (veh/h)	7	1	15	221	4	26	10	461	28	8	793	3
RTOR volume (veh/h)			4			7			7			1
Peak-hour factor	0.92	0.92	0.92	0.92	0.92	0.92	0.92	0.92	0.92	0.92	0.92	0.92
Heavy vehicles (%)	2	2	2	2	2	2	2	2	2	2	2	2
Start-up lost time, l_1 (s)	2.0	2.0	2.0	2.0	2.0	2.0	2.0	2.0	2.0	2.0	2.0	2.0
Extension of effective green, e (s)	2.0	2.0	2.0	2.0	2.0	2.0	2.0	2.0	2.0	2.0	2.0	2.0
Arrival type, AT	3	3		3	3		4	4		4	4	
Approach pedestrian volume (p/h)	4			6			6			1		
Approach bicycle volume (bic/h)	2			2			2			2		
Left/right parking (Y or N)	N	/	N	N	/	N	N	/	N	N	/	N

Signal Phasing Plan

L: LT T: TH R: RT P: Peds

	Phase 1	Phase 2	Phase 3	Phase 4	Phase 5	Phase 6	Phase 7	Phase 8
		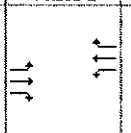						
Green (s)	32.0	16.0						
Yellow + All red (s)	6.0	6.0						

Cycle (s): 60.0 Lost time per cycle (s): 12.0 Critical v/c Ratio: 0.798

Intersection Performance

	EB			WB			NB			SB		
Lane group configuration	L	TR		L	TR		L	TR		L	TR	
No. of lanes	1	1		1	1		1	1		1	1	
Flow rate (veh/h)	8	17		240	33		11	532		9	865	
Capacity (veh/h)	363	416		369	421		157	983		427	993	
Adjusted saturation flow (veh/h)	1360	1560		1382	1578		294	1844		800	1862	
v/c ratio	0.021	0.042		0.652	0.077		0.069	0.540		0.020	0.871	
g/C ratio	0.267	0.267		0.267	0.267		0.533	0.533		0.533	0.533	
Average back of queue (veh)	0.1	0.2		4.3	0.4		0.1	5.1		0.1	15.5	
Initial queue in next period (veh)												
Uniform delay (s)	16.2	16.3		19.5	16.5		6.8	9.2		6.6	12.2	
Incremental delay (s)	0.1	0.2		8.7	0.4		0.9	2.1		0.1	10.4	
Initial queue delay (s)	0.0	0.0		0.0	0.0		0.0	0.0		0.0	0.0	
Delay (s)	16.3	16.5		28.2	16.9		5.7	8.6		4.8	19.1	
LOS	B	B		C	B		A	A		A	B	
Approach delay (s)/LOS	16.5	/	B	26.9	/	C	8.6	/	A	19.0	/	B
Intersection delay (s)/ LOS	16.9			/			B					

CHAPTER 16 - OPERATIONAL ANALYSIS - SUMMARY WORKSHEET

General Information		Site Information		
Analyst	JAS	Jurisdiction/Date	PCDOT	12/31/2003
Agency or Company	CEI	EB/WB Street	Territory Drive	
Analysis Period/Year	PM 2015	NB/SB Street	Craycroft Road	
Comment	Analysis 28			

Intersection Data

Area type: Others Analysis period: 0.25 h Signal type: Pretimed % Back of queue: 95

	EB			WB			NB			SB		
	LT	TH	RT	LT	TH	RT	LT	TH	RT	LT	TH	RT
Volume (veh/h)	3	1	5	51	4	13	4	817	107	44	583	15
RTOR volume (veh/h)			1			4			27			4
Peak-hour factor	0.92	0.92	0.92	0.92	0.92	0.92	0.92	0.92	0.92	0.92	0.92	0.92
Heavy vehicles (%)	2	2	2	2	2	2	2	2	2	2	2	2
Start-up lost time, l_1 (s)	2.0	2.0	2.0	2.0	2.0	2.0	2.0	2.0	2.0	2.0	2.0	2.0
Extension of effective green, e (s)	2.0	2.0	2.0	2.0	2.0	2.0	2.0	2.0	2.0	2.0	2.0	2.0
Arrival type, AT	3	3		3	3		4	4		4	4	
Approach pedestrian volume (p/h)	4			6			6			1		
Approach bicycle volume (bic/h)	2			2			2			2		
Left/right parking (Y or N)	N	/	N	N	/	N	N	/	N	N	/	N

Signal Phasing Plan

L: LT T: TH R: RT P: Peds

	Phase 1	Phase 2	Phase 3	Phase 4	Phase 5	Phase 6	Phase 7	Phase 8
	↓↓↓ ↑↑↑	⇉ ↑↑↑						
Green (s)	34.0	14.0						
Yellow + All red (s)	6.0	6.0						

Cycle (s): 60.0 Lost time per cycle (s): 12.0 Critical v/c Ratio: 0.738

Intersection Performance

	EB			WB			NB			SB		
Lane group configuration	L	TR		L	TR		L	TR		L	TR	
No. of lanes	1	1		1	1		1	1		1	1	
Flow rate (veh/h)	3	7		55	18		4	1004		48	650	
Capacity (veh/h)	321	372		326	376		386	1034		124	1051	
Adjusted saturation flow (veh/h)	1377	1593		1396	1611		682	1825		219	1855	
v/c ratio	0.010	0.018		0.170	0.049		0.011	0.971		0.385	0.618	
g/C ratio	0.233	0.233		0.233	0.233		0.567	0.567		0.567	0.567	
Average back of queue (veh)	0.0	0.1		0.8	0.3		0.0	24.2		0.4	6.4	
Initial queue in next period (veh)												
Uniform delay (s)	17.7	17.7		18.4	17.8		5.7	12.5		7.2	8.7	
Incremental delay (s)	0.1	0.1		1.1	0.2		0.1	21.9		8.8	2.7	
Initial queue delay (s)	0.0	0.0		0.0	0.0		0.0	0.0		0.0	0.0	
Delay (s)	17.8	17.8		19.5	18.0		3.8	30.0		13.5	8.3	
LOS	B	B		B	B		A	C		B	A	
Approach delay (s)/LOS	17.8	/	B	19.1	/	B	29.9	/	C	8.7	/	A
Intersection delay (s)/ LOS	21.1				/					C		

CHAPTER 16 - OPERATIONAL ANALYSIS - SUMMARY WORKSHEET

General Information		Site Information		
Analyst	JAS	Jurisdiction/Date	PCDOT	12/31/2003
Agency or Company	CEI	EB/WB Street	Territory Drive	
Analysis Period/Year	AM 2020	NB/SB Street	Craycroft Road	
Comment	Analysis 29			

Intersection Data

Area type: Others Analysis period: 0.25 h Signal type: Pretimed % Back of queue: 95

	EB			WB			NB			SB		
	LT	TH	RT	LT	TH	RT	LT	TH	RT	LT	TH	RT
Volume (veh/h)	7	1	15	229	4	27	10	487	30	9	835	4
RTOR volume (veh/h)			4			7			7			1
Peak-hour factor	0.92	0.92	0.92	0.92	0.92	0.92	0.92	0.92	0.92	0.92	0.92	0.92
Heavy vehicles (%)	2	2	2	2	2	2	2	2	2	2	2	2
Start-up lost time, l_1 (s)	2.0	2.0	2.0	2.0	2.0	2.0	2.0	2.0	2.0	2.0	2.0	2.0
Extension of effective green, e (s)	2.0	2.0	2.0	2.0	2.0	2.0	2.0	2.0	2.0	2.0	2.0	2.0
Arrival type, AT	3	3		3	3		4	4		4	4	
Approach pedestrian volume (p/h)	4			6			6			1		
Approach bicycle volume (bic/h)	2			2			2			2		
Left/right parking (Y or N)	N	/	N	N	/	N	N	/	N	N	/	N

Signal Phasing Plan

L: LT T: TH R: RT P: Peds

	Phase 1	Phase 2	Phase 3	Phase 4	Phase 5	Phase 6	Phase 7	Phase 8
	↓↓↓ ↑↑↑	⇄ ↑↑↑						
Green (s)	32.0	16.0						
Yellow + All red (s)	6.0	6.0						

Cycle (s): 60.0 Lost time per cycle (s): 12.0 Critical v/c Ratio: 0.838

Intersection Performance

	EB			WB			NB			SB		
Lane group configuration	L	TR		L	TR		L	TR		L	TR	
No. of lanes	1	1		1	1		1	1		1	1	
Flow rate (veh/h)	8	17		249	34		11	562		10	912	
Capacity (veh/h)	362	416		369	421		124	983		403	993	
Adjusted saturation flow (veh/h)	1359	1560		1382	1577		233	1844		756	1861	
v/c ratio	0.021	0.042		0.675	0.080		0.088	0.572		0.024	0.919	
g/C ratio	0.267	0.267		0.267	0.267		0.533	0.533		0.533	0.533	
Average back of queue (veh)	0.1	0.2		4.6	0.5		0.1	5.7		0.1	18.7	
Initial queue in next period (veh)												
Uniform delay (s)	16.2	16.3		19.7	16.5		6.9	9.4		6.6	12.8	
Incremental delay (s)	0.1	0.2		9.5	0.4		1.4	2.4		0.1	14.6	
Initial queue delay (s)	0.0	0.0		0.0	0.0		0.0	0.0		0.0	0.0	
Delay (s)	16.3	16.5		29.2	16.9		6.3	9.1		4.8	23.7	
LOS	B	B		C	B		A	A		A	C	
Approach delay (s)/LOS	16.5	/	B	27.7	/	C	9.0	/	A	23.5	/	C
Intersection delay (s)/ LOS	19.5			/						B		

CHAPTER 16 - OPERATIONAL ANALYSIS - SUMMARY WORKSHEET

General Information		Site Information		
Analyst	JAS	Jurisdiction/Date	PCDOT	12/31/2003
Agency or Company	CEI	EB/WB Street	Territory Drive	
Analysis Period/Year	PM 2020	NB/SB Street	Craycroft Road	
Comment	Analysis 29			

Intersection Data

Area type: Others Analysis period: 0.25 h Signal type: Pretimed % Back of queue: 95

	EB			WB			NB			SB		
	LT	TH	RT	LT	TH	RT	LT	TH	RT	LT	TH	RT
Volume (veh/h)	3	1	4	52	4	13	5	856	111	47	612	16
RTOR volume (veh/h)			2			4			30			4
Peak-hour factor	0.92	0.92	0.92	0.92	0.92	0.92	0.92	0.92	0.92	0.92	0.92	0.92
Heavy vehicles (%)	2	2	2	2	2	2	2	2	2	2	2	2
Start-up lost time, l_1 (s)	2.0	2.0	2.0	2.0	2.0	2.0	2.0	2.0	2.0	2.0	2.0	2.0
Extension of effective green, e (s)	2.0	2.0	2.0	2.0	2.0	2.0	2.0	2.0	2.0	2.0	2.0	2.0
Arrival type, AT	3	3		3	3		4	4		4	4	
Approach pedestrian volume (p/h)	4			6			6			1		
Approach bicycle volume (bic/h)	2			2			2			2		
Left/right parking (Y or N)	N	/	N	N	/	N	N	/	N	N	/	N

Signal Phasing Plan

L: LT T: TH R: RT P: Peds

	Phase 1	Phase 2	Phase 3	Phase 4	Phase 5	Phase 6	Phase 7	Phase 8
	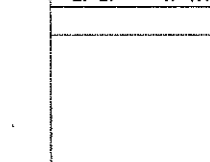							
Green (s)	35.0	13.0						
Yellow + All red (s)	6.0	6.0						

Cycle (s): 60.0 Lost time per cycle (s): 12.0 Critical v/c Ratio: 0.770

Intersection Performance

	EB			WB			NB			SB		
Lane group configuration	L	TR		L	TR		L	TR		L	TR	
No. of lanes	1	1		1	1		1	1		1	1	
Flow rate (veh/h)	3	5		57	18		5	1051		51	683	
Capacity (veh/h)	298	347		303	349		387	1065		124	1082	
Adjusted saturation flow (veh/h)	1377	1603		1397	1611		664	1825		213	1855	
v/c ratio	0.011	0.016		0.187	0.053		0.014	0.987		0.412	0.631	
g/C ratio	0.217	0.217		0.217	0.217		0.583	0.583		0.583	0.583	
Average back of queue (veh)	0.0	0.1		0.9	0.3		0.0	26.8		0.4	6.5	
Initial queue in next period (veh)												
Uniform delay (s)	18.5	18.5		19.2	18.6		5.3	12.3		6.9	8.2	
Incremental delay (s)	0.1	0.1		1.4	0.3		0.1	24.7		9.8	2.8	
Initial queue delay (s)	0.0	0.0		0.0	0.0		0.0	0.0		0.0	0.0	
Delay (s)	18.6	18.6		20.6	18.9		3.3	32.2		14.0	7.9	
LOS	B	B		C	B		A	C		B	A	
Approach delay (s)/LOS	18.6	/	B	20.2	/	C	32.1	/	C	8.3	/	A
Intersection delay (s)/ LOS	22.2					/			C			

CHAPTER 16 - OPERATIONAL ANALYSIS - SUMMARY WORKSHEET

General Information

Analyst: JAS
Agency or Company: CEI
Analysis Period/Year: AM 2025
Comment: Analysis 30

Site Information

Jurisdiction/Date: PCDOT 12/31/2003
EB/WB Street: Territory Drive
NB/SB Street: Craycroft Road

Intersection Data

Area type: Others Analysis period: 0.25 h Signal type: Pretimed % Back of queue: 95

	EB			WB			NB			SB		
	LT	TH	RT	LT	TH	RT	LT	TH	RT	LT	TH	RT
Volume (veh/h)	9	5	19	237	5	28	11	514	31	9	878	4
RTOR volume (veh/h)			5			7			8			1
Peak-hour factor	0.92	0.92	0.92	0.92	0.92	0.92	0.92	0.92	0.92	0.92	0.92	0.92
Heavy vehicles (%)	2	2	2	2	2	2	2	2	2	2	2	2
Start-up lost time, l_1 (s)	2.0	2.0	2.0	2.0	2.0	2.0	2.0	2.0	2.0	2.0	2.0	2.0
Extension of effective green, e (s)	2.0	2.0	2.0	2.0	2.0	2.0	2.0	2.0	2.0	2.0	2.0	2.0
Arrival type, AT	3	3		3	3		4	4		4	4	
Approach pedestrian volume (p/h)	4			6			6			1		
Approach bicycle volume (bic/h)	2			2			2			2		
Left/right parking (Y or N)	N	/	N	N	/	N	N	/	N	N	/	N

Signal Phasing Plan

L: LT T: TH R: RT P: Peds

	Phase 1	Phase 2	Phase 3	Phase 4	Phase 5	Phase 6	Phase 7	Phase 8
	↲↓↳ ↑↑↱	⇉ ⇇						
Green (s)	32.0	16.0						
Yellow + All red (s)	6.0	6.0						

Cycle (s): 60.0 Lost time per cycle (s): 12.0 Critical v/c Ratio: 0.879

Intersection Performance

	EB			WB			NB			SB		
Lane group configuration	L	TR		L	TR		L	TR		L	TR	
No. of lanes	1	1		1	1		1	1		1	1	
Flow rate (veh/h)	10	26		258	36		12	592		10	959	
Capacity (veh/h)	362	428		366	422		124	983		380	993	
Adjusted saturation flow (veh/h)	1356	1606		1372	1584		233	1844		713	1861	
v/c ratio	0.027	0.061		0.704	0.085		0.096	0.602		0.026	0.966	
g/C ratio	0.267	0.267		0.267	0.267		0.533	0.533		0.533	0.533	
Average back of queue (veh)	0.1	0.4		4.8	0.5		0.1	6.2		0.1	23.0	
Initial queue in next period (veh)												
Uniform delay (s)	16.3	16.4		19.9	16.5		6.9	9.6		6.6	13.5	
Incremental delay (s)	0.1	0.3		10.8	0.4		1.5	2.7		0.1	21.4	
Initial queue delay (s)	0.0	0.0		0.0	0.0		0.0	0.0		0.0	0.0	
Delay (s)	16.4	16.7		30.7	16.9		6.4	9.6		4.8	31.0	
LOS	B	B		C	B		A	A		A	C	
Approach delay (s)/LOS	16.6	/	B	29.0	/	C	9.5	/	A	30.7	/	C
Intersection delay (s)/ LOS	23.4					/				C		

CHAPTER 16 - OPERATIONAL ANALYSIS - SUMMARY WORKSHEET

General Information		Site Information		
Analyst	JAS	Jurisdiction/Date	PCDOT	12/31/2003
Agency or Company	CEI	EB/WB Street	Territory Drive	
Analysis Period/Year	PM 2025	NB/SB Street	Craycroft Road	
Comment	Analysis 30			

Intersection Data

Area type: Others Analysis period: 0.25 h Signal type: Pretimed % Back of queue: 95

	EB			WB			NB			SB		
	LT	TH	RT	LT	TH	RT	LT	TH	RT	LT	TH	RT
Volume (veh/h)	5	5	6	54	5	14	5	896	117	49	640	17
RTOR volume (veh/h)			2			4			30			4
Peak-hour factor	0.92	0.92	0.92	0.92	0.92	0.92	0.92	0.92	0.92	0.92	0.92	0.92
Heavy vehicles (%)	2	2	2	2	2	2	2	2	2	2	2	2
Start-up lost time, l_1 (s)	2.0	2.0	2.0	2.0	2.0	2.0	2.0	2.0	2.0	2.0	2.0	2.0
Extension of effective green, e (s)	2.0	2.0	2.0	2.0	2.0	2.0	2.0	2.0	2.0	2.0	2.0	2.0
Arrival type, AT	3	3		3	3		4	4		4	4	
Approach pedestrian volume (p/h)	4			6			6			1		
Approach bicycle volume (bic/h)	2			2			2			2		
Left/right parking (Y or N)	N	/	N	N	/	N	N	/	N	N	/	N

Signal Phasing Plan

L: LT T: TH R: RT P: Peds

	Phase 1	Phase 2	Phase 3	Phase 4	Phase 5	Phase 6	Phase 7	Phase 8
	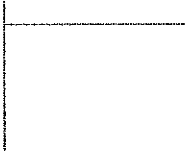							
Green (s)	35.0	13.0						
Yellow + All red (s)	6.0	6.0						

Cycle (s): 60.0 Lost time per cycle (s): 12.0 Critical v/c Ratio: 0.807

Intersection Performance

	EB			WB			NB			SB		
Lane group configuration	L	TR		L	TR		L	TR		L	TR	
No. of lanes	1	1		1	1		1	1		1	1	
Flow rate (veh/h)	5	12		59	21		5	1101		53	714	
Capacity (veh/h)	298	365		301	351		364	1065		124	1082	
Adjusted saturation flow (veh/h)	1375	1685		1389	1620		623	1825		213	1854	
v/c ratio	0.018	0.033		0.195	0.059		0.015	1.034		0.429	0.660	
g/C ratio	0.217	0.217		0.217	0.217		0.583	0.583		0.583	0.583	
Average back of queue (veh)	0.1	0.2		0.9	0.3		0.0	33.5		0.4	7.1	
Initial queue in next period (veh)								9.1				
Uniform delay (s)	18.5	18.5		19.2	18.6		5.3	12.5		6.9	8.5	
Incremental delay (s)	0.1	0.2		1.4	0.3		0.1	36.8		10.5	3.2	
Initial queue delay (s)	0.0	0.0		0.0	0.0		0.0	0.0		0.0	0.0	
Delay (s)	18.6	18.7		20.6	18.9		3.3	44.5		14.8	8.4	
LOS	B	B		C	B		A	D		B	A	
Approach delay (s)/LOS	18.7	/	B	20.2	/	C	44.3	/	D	8.8	/	A
Intersection delay (s)/ LOS	29.3				/					C		

CHAPTER 16 - OPERATIONAL ANALYSIS - SUMMARY WORKSHEET

General Information

Analyst: MDA
Agency or Company: CEI
Analysis Period/Year: AM 2003
Comment: Analysis 31

Site Information

Jurisdiction/Date: Pima County 12/31/2003
EB/WB Street: Sabino Canyon Road
NB/SB Street: Kolb Road

Intersection Data

Area type: Others Analysis period: 0.25 h Signal type: Pretimed % Back of queue: 95

	EB			WB			NB			SB		
	LT	TH	RT	LT	TH	RT	LT	TH	RT	LT	TH	RT
Volume (veh/h)				688		1	0	400	389	10	558	
RTOR volume (veh/h)						0			0			0
Peak-hour factor				0.92		0.92	0.92	0.92	0.92	0.92	0.92	
Heavy vehicles (%)				2		2	2	2	2	2	2	
Start-up lost time, l_1 (s)				2.0		2.0	2.0	2.0	2.0	2.0	2.0	
Extension of effective green, e (s)				2.0		2.0	2.0	2.0	2.0	2.0	2.0	
Arrival type, AT				3		3	4	4	4	4	4	
Approach pedestrian volume (p/h)				5			5			5		
Approach bicycle volume (bic/h)				10			10			10		
Left/right parking (Y or N)	N	/	N	N	/	N	N	/	N	N	/	N

Signal Phasing Plan

L: LT T: TH R: RT P: Peds

	Phase 1	Phase 2	Phase 3	Phase 4	Phase 5	Phase 6	Phase 7	Phase 8
	↓↳ ↑↑↱	↰ ↰ ↱						
Green (s)	24.0	26.0						
Yellow + All red (s)	5.0	5.0						

Cycle (s): 60.0 Lost time per cycle (s): 10.0 Critical v/c Ratio: 0.467

Intersection Performance

	EB			WB			NB			SB		
Lane group configuration				L		R	L	T	R	L	T	
No. of lanes				2		1	1	2	1	1	2	
Flow rate (veh/h)				748		1	0	435	423	11	607	
Capacity (veh/h)				1489		667	296	1419	1440	372	1413	
Adjusted saturation flow (veh/h)				3437		1539	739	3547	1571	931	3533	
v/c ratio				0.502		0.002	0.000	0.306	0.294	0.029	0.429	
g/C ratio				0.433		0.433	0.400	0.400	0.917	0.400	0.400	
Average back of queue (veh)				5.4		0.0	0.0	2.4	-2.0	0.1	3.7	
Initial queue in next period (veh)												
Uniform delay (s)				12.3		9.6	10.8	12.3	0.3	10.9	13.0	
Incremental delay (s)				1.2		0.0	0.0	0.6	0.5	0.1	1.0	
Initial queue delay (s)				0.0		0.0	0.0	0.0	0.0	0.0	0.0	
Delay (s)				13.5		9.6	9.7	11.6	0.5	9.9	12.7	
LOS				B		A	A	B	A	A	B	
Approach delay (s)/LOS		/		13.5	/	B	6.1	/	A	12.6	/	B
Intersection delay (s)/ LOS		10.4				/			B			

CHAPTER 16 - OPERATIONAL ANALYSIS - SUMMARY WORKSHEET

General Information		Site Information	
Analyst	MDA	Jurisdiction/Date	Pima County 12/31/2003
Agency or Company	CEI	EB/WB Street	Sabino Canyon Road
Analysis Period/Year	PM 2020	NB/SB Street	Kolb Road
Comment	Analysis 35		

Intersection Data

Area type: Others Analysis period: 0.25 h Signal type: Pretimed % Back of queue: 95

	EB			WB			NB			SB		
	LT	TH	RT	LT	TH	RT	LT	TH	RT	LT	TH	RT
Volume (veh/h)				492		5	0	975	1014	10	826	
RTOR volume (veh/h)						0			0			0
Peak-hour factor				0.92		0.92	0.92	0.92	0.92	0.92	0.92	
Heavy vehicles (%)				2		2	2	2	2	2	2	
Start-up lost time, l_1 (s)				2.0		2.0	2.0	2.0	2.0	2.0	2.0	
Extension of effective green, e (s)				2.0		2.0	2.0	2.0	2.0	2.0	2.0	
Arrival type, AT				3		3	4	4	4	4	4	
Approach pedestrian volume (p/h)				5			5			5		
Approach bicycle volume (bic/h)				10			10			10		
Left/right parking (Y or N)	N	/	N	N	/	N	N	/	N	N	/	N

Signal Phasing Plan

L: LT T: TH R: RT P: Peds

	Phase 1	Phase 2	Phase 3	Phase 4	Phase 5	Phase 6	Phase 7	Phase 8
	↓↓↳ ↑↑↱	↰ ↰ ↱						
Green (s)	27.0	23.0						
Yellow + All red (s)	5.0	5.0						

Cycle (s): 60.0 Lost time per cycle (s): _____ Critical v/c Ratio: _____

Intersection Performance

	EB			WB			NB			SB		
Lane group configuration				L		R	L	T	R	L	T	
No. of lanes				2		1	1	2	1	1	2	
Flow rate (veh/h)				535		5	0	1060	1102	11	898	
Capacity (veh/h)				1317		590	220	1596	1440	163	1590	
Adjusted saturation flow (veh/h)				3437		1539	490	3547	1571	362	3533	
v/c ratio				0.406		0.009	0.000	0.664	0.765	0.067	0.565	
g/C ratio				0.383		0.383	0.450	0.450	0.917	0.450	0.450	
Average back of queue (veh)				3.8		0.1	0.0	7.6	-59.5	0.1	5.7	
Initial queue in next period (veh)												
Uniform delay (s)				13.5		11.4	9.1	12.9	0.7	9.4	12.2	
Incremental delay (s)				0.9		0.0	0.0	2.2	3.9	0.8	1.5	
Initial queue delay (s)				0.0		0.0	0.0	0.0	0.0	0.0	0.0	
Delay (s)				14.4		11.4	7.6	13.0	3.9	8.6	11.7	
LOS				B		B	A	B	A	A	B	
Approach delay (s)/LOS		/		14.4	/	B	8.4	/	A	11.6	/	B
Intersection delay (s)/ LOS	10.1					/				B		

CHAPTER 16 - OPERATIONAL ANALYSIS - SUMMARY WORKSHEET

General Information		Site Information		
Analyst	MDA	Jurisdiction/Date	Pima County	12/31/2003
Agency or Company	CEI	EB/WB Street	Sabino Canyon Road	
Analysis Period/Year	AM 2025	NB/SB Street	Kolb Road	
Comment	Analysis 36			

Intersection Data

Area type: Others Analysis period: 0.25 h Signal type: Pretimed % Back of queue: 95

	EB			WB			NB			SB		
	LT	TH	RT	LT	TH	RT	LT	TH	RT	LT	TH	RT
Volume (veh/h)				954		5	0	583	560	16	792	
RTOR volume (veh/h)						0			0			0
Peak-hour factor				0.92		0.92	0.92	0.92	0.92	0.92	0.92	
Heavy vehicles (%)				2		2	2	2	2	2	2	
Start-up lost time, l_1 (s)				2.0		2.0	2.0	2.0	2.0	2.0	2.0	
Extension of effective green, e (s)				2.0		2.0	2.0	2.0	2.0	2.0	2.0	
Arrival type, AT				3		3	4	4	4	4	4	
Approach pedestrian volume (p/h)				5			5			5		
Approach bicycle volume (bic/h)				10			10			10		
Left/right parking (Y or N)	N	/	N	N	/	N	N	/	N	N	/	N

Signal Phasing Plan

L: LT T: TH R: RT P: Peds

	Phase 1	Phase 2	Phase 3	Phase 4	Phase 5	Phase 6	Phase 7	Phase 8
	↓↳ ↰↑↑↱	← ← ↱						
Green (s)	24.0	26.0						
Yellow + All red (s)	5.0	5.0						

Cycle (s): 60.0 Lost time per cycle (s): 10.0 Critical v/c Ratio: 0.654

Intersection Performance

	EB			WB			NB			SB		
Lane group configuration				L		R	L	T	R	L	T	
No. of lanes				2		1	1	2	1	1	2	
Flow rate (veh/h)				1037		5	0	634	609	17	861	
Capacity (veh/h)				1489		667	189	1419	1440	283	1413	
Adjusted saturation flow (veh/h)				3437		1539	471	3547	1571	707	3533	
v/c ratio				0.696		0.008	0.000	0.447	0.423	0.061	0.609	
g/C ratio				0.433		0.433	0.400	0.400	0.917	0.400	0.400	
Average back of queue (veh)				8.8		0.1	0.0	4.0	-3.8	0.2	6.3	
Initial queue in next period (veh)												
Uniform delay (s)				13.8		9.7	10.8	13.1	0.3	11.1	14.3	
Incremental delay (s)				2.7		0.0	0.0	1.0	0.9	0.4	2.0	
Initial queue delay (s)				0.0		0.0	0.0	0.0	0.0	0.0	0.0	
Delay (s)				16.5		9.7	9.7	12.8	0.9	10.3	14.8	
LOS				B		A	A	B	A	B	B	
Approach delay (s)/LOS		/		16.5	/	B	7.0	/	A	14.7	/	B
Intersection delay (s)/ LOS		12.2				/				B		

CHAPTER 16 - OPERATIONAL ANALYSIS - SUMMARY WORKSHEET

General Information		Site Information		
Analyst	MDA	Jurisdiction/Date	Pima County	12/31/2003
Agency or Company	CEI	EB/WB Street	Snyder Road	
Analysis Period/Year	PM 2003	NB/SB Street	Kolb Road	
Comment	Analysis 37			

Intersection Data

Area type: Others | Analysis period: 0.25 h | Signal type: Pretimed | % Back of queue: 95

	EB			WB			NB			SB		
	LT	TH	RT	LT	TH	RT	LT	TH	RT	LT	TH	RT
Volume (veh/h)	6	1	8	82	4	68	11	365	101	108	341	5
RTOR volume (veh/h)			0			0			26			2
Peak-hour factor	0.92	0.92	0.92	0.92	0.92	0.92	0.92	0.92	0.92	0.92	0.92	0.92
Heavy vehicles (%)	2	2	2	2	2	2	2	2	2	2	2	2
Start-up lost time, l_1 (s)	2.0	2.0	2.0	2.0	2.0	2.0	2.0	2.0	2.0	2.0	2.0	2.0
Extension of effective green, e (s)	2.0	2.0	2.0	2.0	2.0	2.0	2.0	2.0	2.0	2.0	2.0	2.0
Arrival type, AT		3			3		3	3		3	3	
Approach pedestrian volume (p/h)	5			5			5			5		
Approach bicycle volume (bic/h)	2			2			2			2		
Left/right parking (Y or N)	N	/	N	N	/	N	N	/	N	N	/	N

Signal Phasing Plan

L: LT T: TH R: RT P: Peds

	Phase 1	Phase 2	Phase 3	Phase 4	Phase 5	Phase 6	Phase 7	Phase 8
	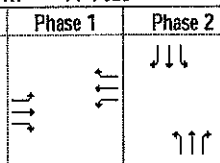							
Green (s)	22.0	28.0						
Yellow + All red (s)	5.0	5.0						

Cycle (s): 60.0 | Lost time per cycle (s): 10.0 | Critical v/c Ratio: 0.497

Intersection Performance

	EB			WB			NB			SB		
Lane group configuration		LTR			LTR		L	TR		L	TR	
No. of lanes		1			1		1	1		1	1	
Flow rate (veh/h)		16			167		12	507		117	376	
Capacity (veh/h)		582			502		399	809		306	869	
Adjusted saturation flow (veh/h)		1587			1369		854	1733		655	1862	
v/c ratio		0.028			0.333		0.030	0.626		0.384	0.433	
g/C ratio		0.367			0.367		0.467	0.467		0.467	0.467	
Average back of queue (veh)		0.2			2.3		0.1	7.6		1.5	4.8	
Initial queue in next period (veh)												
Uniform delay (s)		12.2			13.7		8.7	12.1		10.4	10.7	
Incremental delay (s)		0.1			1.8		0.1	3.6		3.6	1.6	
Initial queue delay (s)		0.0			0.0		0.0	0.0		0.0	0.0	
Delay (s)		12.3			15.5		8.8	15.7		14.0	12.3	
LOS		B			B		A	B		B	B	
Approach delay (s)/LOS	12.3	/	B	15.5	/	B	15.5	/	B	12.7	/	B
Intersection delay (s)/ LOS	14.3				/					B		

CHAPTER 16 - OPERATIONAL ANALYSIS - SUMMARY WORKSHEET

General Information

Analyst	MDA		
Agency or Company	CEI		
Analysis Period/Year	AM	2005	
Comment	Analysis 38		

Site Information

Jurisdiction/Date	Pima County	12/31/2003
EB/WB Street	Snyder Road	
NB/SB Street	Kolb Road	

Intersection Data

Area type Others Analysis period 0.25 h Signal type Pretimed % Back of queue 95

	EB			WB			NB			SB		
	LT	TH	RT	LT	TH	RT	LT	TH	RT	LT	TH	RT
Volume (veh/h)	6	2	19	202	2	74	8	216	32	34	367	4
RTOR volume (veh/h)			0			0			8			1
Peak-hour factor	0.92	0.92	0.92	0.92	0.92	0.92	0.92	0.92	0.92	0.92	0.92	0.92
Heavy vehicles (%)	2	2	2	2	2	2	2	2	2	2	2	2
Start-up lost time, l_1 (s)	2.0	2.0	2.0	2.0	2.0	2.0	2.0	2.0	2.0	2.0	2.0	2.0
Extension of effective green, e (s)	2.0	2.0	2.0	2.0	2.0	2.0	2.0	2.0	2.0	2.0	2.0	2.0
Arrival type, AT		3			3		3	3		3	3	
Approach pedestrian volume (p/h)		5			5			5			5	
Approach bicycle volume (bic/h)		2			2			2			2	
Left/right parking (Y or N)	N	/	N	N	/	N	N	/	N	N	/	N

Signal Phasing Plan

L: LT T: TH R: RT P: Peds

	Phase 1	Phase 2	Phase 3	Phase 4	Phase 5	Phase 6	Phase 7	Phase 8
	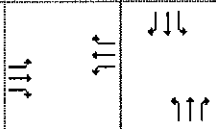							
Green (s)	26.0	24.0						
Yellow + All red (s)	5.0	5.0						

Cycle (s) 60.0 Lost time per cycle (s) 10.0 Critical v/c Ratio 0.542

Intersection Performance

	EB			WB			NB			SB		
Lane group configuration		LTR			LTR		L	TR		L	TR	
No. of lanes		1			1		1	1		1	1	
Flow rate (veh/h)		29			302		9	270		37	403	
Capacity (veh/h)		685			556		295	704		420	745	
Adjusted saturation flow (veh/h)		1582			1283		737	1761		1049	1863	
v/c ratio		0.043			0.544		0.030	0.383		0.088	0.541	
g/C ratio		0.433			0.433		0.400	0.400		0.400	0.400	
Average back of queue (veh)		0.3			4.4		0.1	3.6		0.4	6.0	
Initial queue in next period (veh)												
Uniform delay (s)		9.8			12.6		10.9	12.8		11.2	13.8	
Incremental delay (s)		0.1			3.8		0.2	1.6		0.4	2.8	
Initial queue delay (s)		0.0			0.0		0.0	0.0		0.0	0.0	
Delay (s)		9.9			16.4		11.1	14.4		11.6	16.6	
LOS		A			B		B	B		B	B	
Approach delay (s)/LOS	9.9	/	A	16.4	/	B	14.3	/	B	16.2	/	B
Intersection delay (s)/ LOS		15.6				/				B		

CHAPTER 16 - OPERATIONAL ANALYSIS - SUMMARY WORKSHEET

General Information		Site Information		
Analyst	MDA	Jurisdiction/Date	Pima County	12/31/2003
Agency or Company	CEI	EB/WB Street	Snyder Road	
Analysis Period/Year	PM 2005	NB/SB Street	Kolb Road	
Comment	Analysis 38			

Intersection Data

Area type: Others Analysis period: 0.25 h Signal type: Pretimed % Back of queue: 95

	EB			WB			NB			SB		
	LT	TH	RT	LT	TH	RT	LT	TH	RT	LT	TH	RT
Volume (veh/h)	6	2	19	88	4	73	12	400	111	118	369	6
RTOR volume (veh/h)			0			0			28			2
Peak-hour factor	0.92	0.92	0.92	0.92	0.92	0.92	0.92	0.92	0.92	0.92	0.92	0.92
Heavy vehicles (%)	2	2	2	2	2	2	2	2	2	2	2	2
Start-up lost time, l_1 (s)	2.0	2.0	2.0	2.0	2.0	2.0	2.0	2.0	2.0	2.0	2.0	2.0
Extension of effective green, e (s)	2.0	2.0	2.0	2.0	2.0	2.0	2.0	2.0	2.0	2.0	2.0	2.0
Arrival type, AT		3			3		3	3		3	3	
Approach pedestrian volume (p/h)		5			5			5			5	
Approach bicycle volume (bic/h)		2			2			2			2	
Left/right parking (Y or N)	N	/	N	N	/	N	N	/	N	N	/	N

Signal Phasing Plan

L: LT T: TH R: RT P: Peds

	Phase 1	Phase 2	Phase 3	Phase 4	Phase 5	Phase 6	Phase 7	Phase 8
	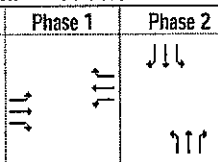							
Green (s)	20.0	30.0						
Yellow + All red (s)	5.0	5.0						

Cycle (s): 60.0 Lost time per cycle (s): 10.0 Critical v/c Ratio: 0.544

Intersection Performance

	EB			WB			NB			SB		
Lane group configuration		LTR			LTR		L	TR		L	TR	
No. of lanes		1			1		1	1		1	1	
Flow rate (veh/h)		29			179		13	555		128	408	
Capacity (veh/h)		530			449		414	867		309	931	
Adjusted saturation flow (veh/h)		1589			1346		828	1733		617	1861	
v/c ratio		0.055			0.400		0.032	0.641		0.416	0.438	
g/C ratio		0.333			0.333		0.500	0.500		0.500	0.500	
Average back of queue (veh)		0.4			2.6		0.1	8.2		1.6	5.0	
Initial queue in next period (veh)												
Uniform delay (s)		13.6			15.4		7.6	11.0		9.5	9.6	
Incremental delay (s)		0.2			2.6		0.1	3.6		4.1	1.5	
Initial queue delay (s)		0.0			0.0		0.0	0.0		0.0	0.0	
Delay (s)		13.8			18.0		7.7	14.6		13.6	11.1	
LOS		B			B		A	B		B	B	
Approach delay (s)/LOS	13.8	/	B	18.0	/	B	14.5	/	B	11.7	/	B
Intersection delay (s)/ LOS		13.8					/			B		

©Catalina Engineering, Inc.

CHAPTER 16 - OPERATIONAL ANALYSIS - SUMMARY WORKSHEET

General Information		Site Information		
Analyst	MDA	Jurisdiction/Date	Pima County	12/31/2003
Agency or Company	CEI	EB/WB Street	Snyder Road	
Analysis Period/Year	AM 2010	NB/SB Street	Kolb Road	
Comment	Analysis 39			

Intersection Data

Area type: Others Analysis period: 0.25 h Signal type: Pretimed % Back of queue: 95

	EB			WB			NB			SB		
	LT	TH	RT	LT	TH	RT	LT	TH	RT	LT	TH	RT
Volume (veh/h)	7	3	22	200	3	75	9	250	36	42	464	4
RTOR volume (veh/h)			0			0			10			2
Peak-hour factor	0.92	0.92	0.92	0.92	0.92	0.92	0.92	0.92	0.92	0.92	0.92	0.92
Heavy vehicles (%)	2	2	2	2	2	2	2	2	2	2	2	2
Start-up lost time, l_1 (s)	2.0	2.0	2.0	2.0	2.0	2.0	2.0	2.0	2.0	2.0	2.0	2.0
Extension of effective green, e (s)	2.0	2.0	2.0	2.0	2.0	2.0	2.0	2.0	2.0	2.0	2.0	2.0
Arrival type, AT		3			3		3	3		3	3	
Approach pedestrian volume (p/h)	5			5			5			5		
Approach bicycle volume (bic/h)	2			2			2			2		
Left/right parking (Y or N)	N	/	N	N	/	N	N	/	N	N	/	N

Signal Phasing Plan

L: LT T: TH R: RT P: Peds

	Phase 1	Phase 2	Phase 3	Phase 4	Phase 5	Phase 6	Phase 7	Phase 8
Green (s)	24.0	26.0						
Yellow + All red (s)	5.0	5.0						

Cycle (s): 60.0 Lost time per cycle (s): 10.0 Critical v/c Ratio: 0.611

Intersection Performance

	EB			WB			NB			SB		
Lane group configuration		LTR			LTR		L	TR		L	TR	
No. of lanes		1			1		1	1		1	1	
Flow rate (veh/h)		35			302		10	311		46	509	
Capacity (veh/h)		631			512		253	764		427	808	
Adjusted saturation flow (veh/h)		1578			1279		584	1762		985	1864	
v/c ratio		0.055			0.591		0.039	0.407		0.107	0.630	
g/C ratio		0.400			0.400		0.433	0.433		0.433	0.433	
Average back of queue (veh)		0.4			4.7		0.1	4.0		0.5	7.8	
Initial queue in next period (veh)												
Uniform delay (s)		11.0			14.1		9.8	11.7		10.1	13.2	
Incremental delay (s)		0.2			4.9		0.3	1.6		0.5	3.7	
Initial queue delay (s)		0.0			0.0		0.0	0.0		0.0	0.0	
Delay (s)		11.2			19.0		10.1	13.3		10.6	16.9	
LOS		B			B		B	B		B	B	
Approach delay (s)/LOS	11.2	/	B	19.0	/	B	13.2	/	B	16.4	/	B
Intersection delay (s)/ LOS	16.1				/					B		

CHAPTER 16 - OPERATIONAL ANALYSIS - SUMMARY WORKSHEET

General Information		***Site Information***		
Analyst	MDA	Jurisdiction/Date	Pima County	12/31/2003
Agency or Company	CEI	EB/WB Street	Snyder Road	
Analysis Period/Year	PM 2010	NB/SB Street	Kolb Road	
Comment	Analysis 39			

Intersection Data

Area type: Others | Analysis period: 0.25 h | Signal type: Pretimed | % Back of queue: 95

	EB			WB			NB			SB		
	LT	TH	RT	LT	TH	RT	LT	TH	RT	LT	TH	RT
Volume (veh/h)	7	3	10	96	5	80	13	453	124	132	412	8
RTOR volume (veh/h)			0			0			32			2
Peak-hour factor	0.92	0.92	0.92	0.92	0.92	0.92	0.92	0.92	0.92	0.92	0.92	0.92
Heavy vehicles (%)	2	2	2	2	2	2	2	2	2	2	2	2
Start-up lost time, l_1 (s)	2.0	2.0	2.0	2.0	2.0	2.0	2.0	2.0	2.0	2.0	2.0	2.0
Extension of effective green, e (s)	2.0	2.0	2.0	2.0	2.0	2.0	2.0	2.0	2.0	2.0	2.0	2.0
Arrival type, AT		3			3		3	3		3	3	
Approach pedestrian volume (p/h)	5			5			5			5		
Approach bicycle volume (bic/h)	2			2			2			2		
Left/right parking (Y or N)	N	/	N	N	/	N	N	/	N	N	/	N

Signal Phasing Plan

L: LT T: TH R: RT P: Peds

	Phase 1	Phase 2	Phase 3	Phase 4	Phase 5	Phase 6	Phase 7	Phase 8
	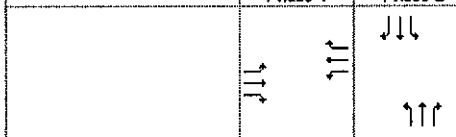							
Green (s)	20.0	30.0						
Yellow + All red (s)	5.0	5.0						

Cycle (s): 60.0 | Lost time per cycle (s): 10.0 | Critical v/c Ratio: 0.609

Intersection Performance

	EB			WB			NB			SB		
Lane group configuration		LTR			LTR		L	TR		L	TR	
No. of lanes		1			1		1	1		1	1	
Flow rate (veh/h)		22			197		14	627		143	457	
Capacity (veh/h)		530			449		374	867		253	930	
Adjusted saturation flow (veh/h)		1589			1348		749	1734		507	1860	
v/c ratio		0.041			0.438		0.038	0.723		0.566	0.491	
g/C ratio		0.333			0.333		0.500	0.500		0.500	0.500	
Average back of queue (veh)		0.3			2.9		0.1	10.1		2.1	5.8	
Initial queue in next period (veh)												
Uniform delay (s)		13.5			15.6		7.6	11.7		10.5	9.9	
Incremental delay (s)		0.1			3.1		0.2	5.2		8.9	1.8	
Initial queue delay (s)		0.0			0.0		0.0	0.0		0.0	0.0	
Delay (s)		13.6			18.7		7.8	16.9		19.4	11.7	
LOS		B			B		A	B		B	B	
Approach delay (s)/LOS	13.6	/	B	18.7	/	B	16.7	/	B	13.6	/	B
Intersection delay (s)/ LOS	15.7				/					B		

CHAPTER 16 - OPERATIONAL ANALYSIS - SUMMARY WORKSHEET

General Information		Site Information		
Analyst	MDA	Jurisdiction/Date	Pima County	12/31/2003
Agency or Company	CEI	EB/WB Street	Snyder Road	
Analysis Period/Year	AM 2015	NB/SB Street	Kolb Road	
Comment	Analysis 40			

Intersection Data

Area type: Others Analysis period: 0.25 h Signal type: Pretimed % Back of queue: 95

	EB			WB			NB			SB		
	LT	TH	RT	LT	TH	RT	LT	TH	RT	LT	TH	RT
Volume (veh/h)	7	4	23	199	4	75	10	272	40	48	529	4
RTOR volume (veh/h)			0			0			10			2
Peak-hour factor	0.92	0.92	0.92	0.92	0.92	0.92	0.92	0.92	0.92	0.92	0.92	0.92
Heavy vehicles (%)	2	2	2	2	2	2	2	2	2	2	2	2
Start-up lost time, l_1 (s)	2.0	2.0	2.0	2.0	2.0	2.0	2.0	2.0	2.0	2.0	2.0	2.0
Extension of effective green, e (s)	2.0	2.0	2.0	2.0	2.0	2.0	2.0	2.0	2.0	2.0	2.0	2.0
Arrival type, AT		3			3		3	3		3	3	
Approach pedestrian volume (p/h)		5			5			5			5	
Approach bicycle volume (bic/h)		2			2			2			2	
Left/right parking (Y or N)	N	/	N	N	/	N	N	/	N	N	/	N

Signal Phasing Plan

L: LT T: TH R: RT P: Peds

	Phase 1	Phase 2	Phase 3	Phase 4	Phase 5	Phase 6	Phase 7	Phase 8
	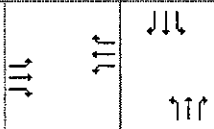							
Green (s)	24.0	26.0						
Yellow + All red (s)	5.0	5.0						

Cycle (s): 60.0 Lost time per cycle (s): 10.0 Critical v/c Ratio: 0.657

Intersection Performance

	EB			WB			NB			SB		
Lane group configuration		LTR			LTR		L	TR		L	TR	
No. of lanes		1			1		1	1		1	1	
Flow rate (veh/h)		37			302		11	339		52	579	
Capacity (veh/h)		635			511		200	763		402	808	
Adjusted saturation flow (veh/h)		1587			1278		462	1761		928	1864	
v/c ratio		0.058			0.591		0.054	0.444		0.130	0.717	
g/C ratio		0.400			0.400		0.433	0.433		0.433	0.433	
Average back of queue (veh)		0.4			4.7		0.1	4.5		0.6	9.7	
Initial queue in next period (veh)												
Uniform delay (s)		11.1			14.1		9.9	11.9		10.2	14.0	
Incremental delay (s)		0.2			5.0		0.5	1.9		0.7	5.4	
Initial queue delay (s)		0.0			0.0		0.0	0.0		0.0	0.0	
Delay (s)		11.3			19.1		10.4	13.8		10.9	19.4	
LOS		B			B		B	B		B	B	
Approach delay (s)/LOS	11.3	/	B	19.1	/	B	13.7	/	B	18.7	/	B
Intersection delay (s)/ LOS		17.3			/			B				

CHAPTER 16 - OPERATIONAL ANALYSIS - SUMMARY WORKSHEET

General Information		Site Information		
Analyst	MDA	Jurisdiction/Date	Pima County	12/31/2003
Agency or Company	CEI	EB/WB Street	Snyder Road	
Analysis Period/Year	PM 2015	NB/SB Street	Kolb Road	
Comment	Analysis 40			

Intersection Data

Area type: Others Analysis period: 0.25 h Signal type: Pretimed % Back of queue: 95

	EB			WB			NB			SB		
	LT	TH	RT	LT	TH	RT	LT	TH	RT	LT	TH	RT
Volume (veh/h)	7	4	10	102	5	85	14	488	134	142	440	8
RTOR volume (veh/h)			0			0			34			3
Peak-hour factor	0.92	0.92	0.92	0.92	0.92	0.92	0.92	0.92	0.92	0.92	0.92	0.92
Heavy vehicles (%)	2	2	2	2	2	2	2	2	2	2	2	2
Start-up lost time, l_1 (s)	2.0	2.0	2.0	2.0	2.0	2.0	2.0	2.0	2.0	2.0	2.0	2.0
Extension of effective green, e (s)	2.0	2.0	2.0	2.0	2.0	2.0	2.0	2.0	2.0	2.0	2.0	2.0
Arrival type, AT		3			3		3	3		3	3	
Approach pedestrian volume (p/h)	5			5			5			5		
Approach bicycle volume (bic/h)	2			2			2			2		
Left/right parking (Y or N)	N	/	N	N	/	N	N	/	N	N	/	N

Signal Phasing Plan

L: LT T: TH R: RT P: Peds

	Phase 1	Phase 2	Phase 3	Phase 4	Phase 5	Phase 6	Phase 7	Phase 8
	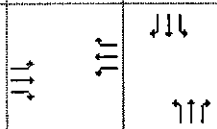							
Green (s)	20.0	30.0						
Yellow + All red (s)	5.0	5.0						

Cycle (s): 60.0 Lost time per cycle (s): 10.0 Critical v/c Ratio: 0.654

Intersection Performance

	EB			WB			NB			SB		
Lane group configuration		LTR			LTR		L	TR		L	TR	
No. of lanes		1			1		1	1		1	1	
Flow rate (veh/h)		23			209		15	676		154	487	
Capacity (veh/h)		533			448		350	867		217	930	
Adjusted saturation flow (veh/h)		1599			1343		701	1734		433	1861	
v/c ratio		0.043			0.466		0.043	0.780		0.713	0.523	
g/C ratio		0.333			0.333		0.500	0.500		0.500	0.500	
Average back of queue (veh)		0.3			3.2		0.1	11.7		2.7	6.4	
Initial queue in next period (veh)												
Uniform delay (s)		13.5			15.8		7.7	12.3		11.7	10.2	
Incremental delay (s)		0.2			3.5		0.2	6.9		18.1	2.1	
Initial queue delay (s)		0.0			0.0		0.0	0.0		0.0	0.0	
Delay (s)		13.7			19.3		7.9	19.2		29.8	12.3	
LOS		B			B		A	B		C	B	
Approach delay (s)/LOS	13.7	/	B	19.3	/	B	18.9	/	B	16.5	/	B
Intersection delay (s)/ LOS	17.9						/			B		

CHAPTER 16 - OPERATIONAL ANALYSIS - SUMMARY WORKSHEET

General Information

Analyst	MDA		
Agency or Company	CEI		
Analysis Period/Year	AM	2020	
Comment	Analysis 41		

Site Information

Jurisdiction/Date	Pima County	12/31/2003
EB/WB Street	Snyder Road	
NB/SB Street	Kolb Road	

Intersection Data

Area type Others Analysis period 0.25 h Signal type Pretimed % Back of queue 95

	EB			WB			NB			SB		
	LT	TH	RT	LT	TH	RT	LT	TH	RT	LT	TH	RT
Volume (veh/h)	8	4	24	198	4	75	10	288	42	52	577	5
RTOR volume (veh/h)			0			0			11			2
Peak-hour factor	0.92	0.92	0.92	0.92	0.92	0.92	0.92	0.92	0.92	0.92	0.92	0.92
Heavy vehicles (%)	2	2	2	2	2	2	2	2	2	2	2	2
Start-up lost time, l_1 (s)	2.0	2.0	2.0	2.0	2.0	2.0	2.0	2.0	2.0	2.0	2.0	2.0
Extension of effective green, e (s)	2.0	2.0	2.0	2.0	2.0	2.0	2.0	2.0	2.0	2.0	2.0	2.0
Arrival type, AT		3			3		3	3		3	3	
Approach pedestrian volume (p/h)		5			5			5			5	
Approach bicycle volume (bic/h)		2			2			2			2	
Left/right parking (Y or N)	N	/	N	N	/	N	N	/	N	N	/	N

Signal Phasing Plan

L: LT T: TH R: RT P: Peds

	Phase 1	Phase 2	Phase 3	Phase 4	Phase 5	Phase 6	Phase 7	Phase 8
	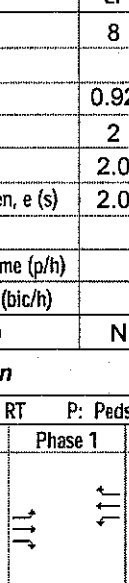							
Green (s)	23.0	27.0						
Yellow + All red (s)	5.0	5.0						

Cycle (s) 60.0 Lost time per cycle (s) 10.0 Critical v/c Ratio 0.691

Intersection Performance

	EB			WB			NB			SB		
Lane group configuration		LTR			LTR		L	TR		L	TR	
No. of lanes		1			1		1	1		1	1	
Flow rate (veh/h)		39			301		11	359		57	633	
Capacity (veh/h)		604			489		181	793		407	839	
Adjusted saturation flow (veh/h)		1575			1276		403	1762		903	1864	
v/c ratio		0.065			0.616		0.060	0.452		0.139	0.754	
g/C ratio		0.383			0.383		0.450	0.450		0.450	0.450	
Average back of queue (veh)		0.5			4.9		0.1	4.7		0.6	10.9	
Initial queue in next period (veh)												
Uniform delay (s)		11.7			14.9		9.3	11.4		9.7	13.7	
Incremental delay (s)		0.2			5.7		0.6	1.9		0.7	6.2	
Initial queue delay (s)		0.0			0.0		0.0	0.0		0.0	0.0	
Delay (s)		11.9			20.6		9.9	13.3		10.4	19.9	
LOS		B			C		A	B		B	B	
Approach delay (s)/LOS	11.9	/	B	20.6	/	C	13.2	/	B	19.2	/	B
Intersection delay (s)/ LOS		17.7			/					B		

CHAPTER 16 - OPERATIONAL ANALYSIS - SUMMARY WORKSHEET

General Information		Site Information		
Analyst	MDA	Jurisdiction/Date	Pima County	12/31/2003
Agency or Company	CEI	EB/WB Street	Snyder Road	
Analysis Period/Year	PM 2020	NB/SB Street	Kolb Road	
Comment	Analysis 41			

Intersection Data

Area type: Others Analysis period: 0.25 h Signal type: Pretimed % Back of queue: 95

	EB			WB			NB			SB		
	LT	TH	RT	LT	TH	RT	LT	TH	RT	LT	TH	RT
Volume (veh/h)	8	4	11	106	6	88	14	514	140	149	462	9
RTOR volume (veh/h)			0			0			36			3
Peak-hour factor	0.92	0.92	0.92	0.92	0.92	0.92	0.92	0.92	0.92	0.92	0.92	0.92
Heavy vehicles (%)	2	2	2	2	2	2	2	2	2	2	2	2
Start-up lost time, l_1 (s)	2.0	2.0	2.0	2.0	2.0	2.0	2.0	2.0	2.0	2.0	2.0	2.0
Extension of effective green, e (s)	2.0	2.0	2.0	2.0	2.0	2.0	2.0	2.0	2.0	2.0	2.0	2.0
Arrival type, AT		3			3		3	3		3	3	
Approach pedestrian volume (p/h)	5			5			5			5		
Approach bicycle volume (bic/h)	2			2			2			2		
Left/right parking (Y or N)	N	/	N	N	/	N	N	/	N	N	/	N

Signal Phasing Plan

L: LT T: TH R: RT P: Peds

	Phase 1	Phase 2	Phase 3	Phase 4	Phase 5	Phase 6	Phase 7	Phase 8
Green (s)	19.0	31.0						
Yellow + All red (s)	5.0	5.0						

Cycle (s): 60.0 Lost time per cycle (s): 10.0 Critical v/c Ratio: 0.687

Intersection Performance

	EB			WB			NB			SB		
Lane group configuration		LTR			LTR		L	TR		L	TR	
No. of lanes		1			1		1	1		1	1	
Flow rate (veh/h)		25			217		15	711		162	512	
Capacity (veh/h)		500			423		351	896		211	961	
Adjusted saturation flow (veh/h)		1579			1335		679	1734		409	1860	
v/c ratio		0.050			0.514		0.043	0.793		0.767	0.533	
g/C ratio		0.317			0.317		0.517	0.517		0.517	0.517	
Average back of queue (veh)		0.3			3.4		0.1	12.4		3.0	6.6	
Initial queue in next period (veh)												
Uniform delay (s)		14.2			16.7		7.2	11.9		11.6	9.7	
Incremental delay (s)		0.2			4.4		0.2	7.2		23.0	2.1	
Initial queue delay (s)		0.0			0.0		0.0	0.0		0.0	0.0	
Delay (s)		14.4			21.1		7.4	19.1		34.6	11.8	
LOS		B			C		A	B		C	B	
Approach delay (s)/LOS	14.4	/	B	21.1	/	C	18.8	/	B	17.3	/	B
Intersection delay (s)/ LOS	18.4				/					B		

CHAPTER 16 - OPERATIONAL ANALYSIS - SUMMARY WORKSHEET

General Information		***Site Information***		
Analyst	MDA	Jurisdiction/Date	Pima County	12/31/2003
Agency or Company	CEI	EB/WB Street	Snyder Road	
Analysis Period/Year	AM 2025	NB/SB Street	Kolb Road	
Comment	Analysis 42			

Intersection Data

Area type Others Analysis period 0.25 h Signal type Pretimed % Back of queue 95

	EB			WB			NB			SB		
	LT	TH	RT	LT	TH	RT	LT	TH	RT	LT	TH	RT
Volume (veh/h)	8	5	25	197	5	75	11	305	44	56	626	5
RTOR volume (veh/h)			0			0			12			2
Peak-hour factor	0.92	0.92	0.92	0.92	0.92	0.92	0.92	0.92	0.92	0.92	0.92	0.92
Heavy vehicles (%)	2	2	2	2	2	2	2	2	2	2	2	2
Start-up lost time, l_1 (s)	2.0	2.0	2.0	2.0	2.0	2.0	2.0	2.0	2.0	2.0	2.0	2.0
Extension of effective green, e (s)	2.0	2.0	2.0	2.0	2.0	2.0	2.0	2.0	2.0	2.0	2.0	2.0
Arrival type, AT		3			3		3	3		3	3	
Approach pedestrian volume (p/h)		5			5			5			5	
Approach bicycle volume (bic/h)		2			2			2			2	
Left/right parking (Y or N)	N	/	N	N	/	N	N	/	N	N	/	N

Signal Phasing Plan

L: LT T: TH R: RT P: Peds

	Phase 1	Phase 2	Phase 3	Phase 4	Phase 5	Phase 6	Phase 7	Phase 8
Green (s)	24.0	26.0						
Yellow + All red (s)	5.0	5.0						

Cycle (s) 60.0 Lost time per cycle (s) 10.0 Critical v/c Ratio 0.725

Intersection Performance

	EB			WB			NB			SB		
Lane group configuration		LTR			LTR		L	TR		L	TR	
No. of lanes		1			1		1	1		1	1	
Flow rate (veh/h)		41			301		12	379		61	686	
Capacity (veh/h)		634			510		123	763		368	808	
Adjusted saturation flow (veh/h)		1586			1275		284	1762		848	1864	
v/c ratio		0.065			0.590		0.097	0.497		0.166	0.849	
g/C ratio		0.400			0.400		0.433	0.433		0.433	0.433	
Average back of queue (veh)		0.5			4.7		0.1	5.3		0.7	13.7	
Initial queue in next period (veh)												
Uniform delay (s)		11.1			14.1		10.1	12.3		10.4	15.2	
Incremental delay (s)		0.2			5.0		1.6	2.3		1.0	10.8	
Initial queue delay (s)		0.0			0.0		0.0	0.0		0.0	0.0	
Delay (s)		11.3			19.1		11.7	14.6		11.4	26.0	
LOS		B			B		B	B		B	C	
Approach delay (s)/LOS	11.3	/	B	19.1	/	B	14.5	/	B	24.8	/	C
Intersection delay (s)/ LOS		20.6				/				C		

CHAPTER 16 - OPERATIONAL ANALYSIS - SUMMARY WORKSHEET

General Information		Site Information		
Analyst	MDA	Jurisdiction/Date	Pima County	12/31/2003
Agency or Company	CEI	EB/WB Street	Snyder Road	
Analysis Period/Year	PM 2025	NB/SB Street	Kolb Road	
Comment	Analysis 42			

Intersection Data

Area type: Others | Analysis period: 0.25 h | Signal type: Pretimed | % Back of queue: 95

	EB			WB			NB			SB		
	LT	TH	RT	LT	TH	RT	LT	TH	RT	LT	TH	RT
Volume (veh/h)	8	5	11	110	6	92	15	540	148	156	483	10
RTOR volume (veh/h)			0			0			37			3
Peak-hour factor	0.92	0.92	0.92	0.92	0.92	0.92	0.92	0.92	0.92	0.92	0.92	0.92
Heavy vehicles (%)	2	2	2	2	2	2	2	2	2	2	2	2
Start-up lost time, l_1 (s)	2.0	2.0	2.0	2.0	2.0	2.0	2.0	2.0	2.0	2.0	2.0	2.0
Extension of effective green, e (s)	2.0	2.0	2.0	2.0	2.0	2.0	2.0	2.0	2.0	2.0	2.0	2.0
Arrival type, AT		3			3		3	3		3	3	
Approach pedestrian volume (p/h)	5			5			5			5		
Approach bicycle volume (bic/h)	2			2			2			2		
Left/right parking (Y or N)	N	/	N	N	/	N	N	/	N	N	/	N

Signal Phasing Plan

L: LT T: TH R: RT P: Peds

	Phase 1	Phase 2	Phase 3	Phase 4	Phase 5	Phase 6	Phase 7	Phase 8
	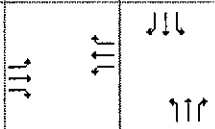							
Green (s)	17.0	33.0						
Yellow + All red (s)	5.0	5.0						

Cycle (s): 60.0 | Lost time per cycle (s): 10.0 | Critical v/c Ratio: 0.722

Intersection Performance

	EB			WB			NB			SB		
Lane group configuration		LTR			LTR		L	TR		L	TR	
No. of lanes		1			1		1	1		1	1	
Flow rate (veh/h)		26			226		16	748		170	536	
Capacity (veh/h)		446			377		373	954		225	1023	
Adjusted saturation flow (veh/h)		1576			1330		678	1734		409	1860	
v/c ratio		0.058			0.600		0.044	0.784		0.754	0.524	
g/C ratio		0.283			0.283		0.550	0.550		0.550	0.550	
Average back of queue (veh)		0.3			3.9		0.1	12.6		3.0	6.6	
Initial queue in next period (veh)												
Uniform delay (s)		15.7			18.6		6.2	10.7		10.4	8.5	
Incremental delay (s)		0.3			6.9		0.2	6.4		20.7	1.9	
Initial queue delay (s)		0.0			0.0		0.0	0.0		0.0	0.0	
Delay (s)		16.0			25.5		6.4	17.1		31.1	10.4	
LOS		B			C		A	B		C	B	
Approach delay (s)/LOS	16.0	/	B	25.5	/	C	16.9	/	B	15.4	/	B
Intersection delay (s)/ LOS	17.4			/			B					

APPENDIX C. COST ESTIMATE WORKSHEETS

SUNRISE DRIVE, CRAYCROFT ROAD TO KOLB ROAD
PAVING IMPROVEMENT
OPINION OF PROBABLE CONSTRUCTION COST

			Original 4 Lane Divided Design		Alternate 1 4 Lane Divided Minimized			Alternate 2 4 Lane/3 Lane Split Minimized			Alternate 3 3 Lane Minimized		
ITEM	UNIT	UNIT COST	QUANTITY	TOTAL COST	QUANTITY	TOTAL COST	Cost Red	QUANTITY	TOTAL COST	Cost Red	QUANTITY	TOTAL COST	Cost Red
NPDES (ORIGINAL)	L.S.	$25,000	1	$25,000	1	$25,000	0%	1	$25,000	0%	1	$25,000	0%
NPDES (MODIFICATIONS)	L.S.	$25,000	1	$25,000	1	$25,000	0%	1	$25,000	0%	1	$25,000	0%
CLEARING AND GRUBBING	L.S.	$500,000	1	$500,000	1	$500,000	0%	1	$425,000	15%	1	$350,000	30%
REMOVAL OF STRUCTURES AND OBSTRUCTIONS	L.S.	$600,000	1	$600,000	1	$600,000	0%	1	$510,000	15%	1	$420,000	30%
ROADWAY EXCAVATION	C.Y.	$3	171000	$513,000	118000	$354,000	31%	92000	$276,000	46%	62000	$186,000	64%
AGGREGATE BASE COURSE	C.Y.	$15	31700	$475,500	29000	$435,000	9%	25500	$382,500	20%	21300	$319,500	33%
BITUMINOUS TACK COAT	TON	$320	775	$248,000	710	$227,200	8%	625	$200,000	19%	520	$166,400	33%
ASPHALTIC CONCRETE (NO. 1 MIX)	TON	$40	16900	$676,000	15400	$616,000	9%	13600	$544,000	20%	11300	$452,000	33%
ASPHALTIC CONCRETE (NO. 3 MIX)	TON	$40	13500	$540,000	12200	$488,000	10%	10700	$428,000	21%	9000	$360,000	33%
CATCH BASIN	EA.	$3,500	132	$462,000	18	$63,000	86%	14	$49,000	89%	8	$28,000	94%
STORM DRAIN (PIPES AND MANHOLES)	L.F.	$60	7610	$456,600	1800	$108,000	76%	1400	$84,000	82%	800	$48,000	89%
DRAINAGE DITCHES	L.F.	$20	2600	$52,000	5200	$104,000	-100%	5200	$104,000	-100%	5200	$104,000	-100%
MISC. UTILITY RELOCATIONS	L.S.	$100,000	1	$100,000	1	$100,000	0%	1	$100,000	0%	1	$100,000	0%
MAINTENANCE AND PROTECTION OF TRAFFIC	L.S.	$150,000	1	$150,000	1	$150,000	0%	1	$150,000	0%	1	$150,000	0%
FURNISH AND INSTALL TEMPORARY TRAFFIC CONTROL DEVICES	L.S.	$300,000	1	$300,000	1	$300,000	0%	1	$300,000	0%	1	$300,000	0%
PAVEMENT MARKINGS	L.S.	$80,000	1	$80,000	1	$80,000	0%	1	$80,000	0%	1	$80,000	0%
TRAFFIC SIGNAL (CRAYCROFT ROAD)	L.S.	$170,000	1	$170,000	1	$170,000	0%	1	$170,000	0%	1	$170,000	0%
TRAFFIC SIGNAL (KOLB ROAD)	L.S.	$170,000	1	$170,000	1	$170,000	0%	1	$170,000	0%	1	$170,000	0%
LANDSCAPE	L.S.	$800,000	1	$800,000	1	$480,000	40%	1	$480,000	40%	1	$480,000	40%
SEWER RELOCATION	L.S.	$100,000	1	$100,000	1	$100,000	0%	1	$100,000	0%	1	$100,000	0%
WATER RELOCATION	L.S.	$1,000,000	1	$1,000,000	1	$1,000,000	0%	1	$1,000,000	0%	1	$1,000,000	0%
MOBILIZATION	L.S.	$400,000	1	$400,000	1	$400,000	0%	1	$400,000	0%	1	$400,000	0%
CONCRETE CURB	L.F.	$8	22980	$183,840	1500	$12,000	93%	1500	$12,000	93%	1500	$12,000	93%
CONCRETE CURB AND GUTTER	L.F.	$8	19250	$154,000	0	$0	100%	0	$0	100%	0	$0	100%
CONCRETE SIDEWALK	S.F.	$3	83200	$249,600	0	$0	100%	0	$0	100%	0	$0	100%
CONCRETE WHEELCHAIR RAMP	EA.	$500	26	$13,000	0	$0	100%	0	$0	100%	0	$0	100%
CONCRETE DRIVEWAY	S.F.	$3	4200	$12,600	0	$0	100%	0	$0	100%	0	$0	100%
NOISE BARRIER WALL	L.F.	$140	7000	$980,000	0	$0	100%	0	$0	100%	0	$0	100%
SLOPE PROTECTION	S.F.	$35	138175	$4,836,125	118575	$4,150,125	14%	83831	$2,934,085	39%	37963	$1,328,705	73%
RETAINING WALL	L.F.	$250	0	$0	0	$0	-	1580	$395,000	-	4498	$1,124,500	-
INCIDENTAL ITEMS	L.S.	$150,000	1	$150,000	1	$150,000	0%	1	$150,000	0%	1	$150,000	0%
SUBTOTAL				$14,422,265		$10,807,325			$9,493,585			$8,049,105	
20% CONTINGENCY				$2,884,453		$2,161,465			$1,898,717			$1,609,821	
TOTAL				**$17,306,718**		**$12,968,790**			**$11,392,302**			**$9,658,926**	

Sunrise Drive Preliminary Planning Quantity Estimations					
		Alternative Design			
Item		4 Lane Original	4 Lane Minimized	4 Lane/3 Lane Split	3 Lane Minimized
Roadway Excavation					
General Assumption: Eagle Point runs with .25:1 slopes from clear zone to existing ground		Values Taken from Original Design Alternatives Calcs	50% added to Raw Cut for Higher Walls, Fill doubled for slopes > .25:1	40% added to Raw Cut for Higher Walls, Fill doubled for slopes > .25:2	25% added to Raw Cut for Higher Walls, Fill doubled for slopes > .25:3
Raw Cut	Cu. Yd.		51568	46243	39588
Adjusted Cut	Cu. Yd.	**110997**	**77352**	**64740**	**49485**
Raw Fill	Cu. Yd.		42653	33145	14284
Adjusted Fill	Cu. Yd.	154292	85306	66290	28568
Compacted Fill (Raw x 1/.9)	Cu. Yd.	**171436**	**94784**	**73656**	**31742**
Excavation	Cu. Yd.	171436	94784	73656	49485
25% Contingency	Cu. Yd.	Incuded in Above	23696	18414	12371
Total Excavation	Cu. Yd.	**171436**	**118481**	**92069**	**61856**
Rounded Total	Cu. Yd.	**171000**	**118000**	**92000**	**62000**
Pavement Area					
General Assumption: Original Design Quantities Used and adjusted to new cross sections		4 Lane Divided, 14' & 12' Travel Lane, 10' Multi Use Lane	4 Lane Divided, 2-12' Travel Lanes, 6' Bike Lane	4 Lane Divided, 2-12' Travel Lanes, 6' Bike Lane from Craycroft to Wilmot and Otono to Kolb. 3 Lane from Wilmot to Otono	3 Lane, 3-12' Travel Lanes, 6' Bike Lane, with 4 Lane Divded from Craycroft to Zarzosa and Otono to Kolb
Pavement Cross Section Length		68	60	60	60
Length of Cross Section		10000	10000	7500	4000
Pavement Cross Section Length				48	48
Length of Cross Section				2500	6000
Mainline Pavement Area		680000	600000	570000	528000
Total Pavement Area	Sq. Ft.	928043	848043	818043	776043
% Decrease from Original		0%	9%	12%	16%
Aggregate Base	**Cu. Yd.**	**31689**	**28957**	**25525**	**21344**
Bitumonius Tack Coat	**Ton**	**773**	**707**	**623**	**521**
Asphaltic Concrete (No. 1 Mix)	**Ton**	**16821**	**15371**	**13549**	**11330**
Asphaltic Concrete (No. 3 Mix)	**Ton**	**13332**	**12183**	**10739**	**8980**
Drainage Items					
General Assumption: Cross culverts are not being modified on any design.		Full Storm Drain System	Minimal Storm Drain, Only necessary median catch basins in super areas and drainage ditches to washes	Minimal Storm Drain, Only necessary median catch basins in super areas and drainage ditches to washes	Minimal Storm Drain, Only necessary median catch basins in super areas and drainage ditches to washes
Catch Basins	Ea.	132	18	14	8
Storm Drain Pipe	L. Ft	7610	1800	1400	800
Drainage Ditches	L. Ft	2600	5200	5200	5200

Concrete Items					
General Assumption: All concrete work is removed		Full curb and sidewalk system	No Concrete except header at access points and side streets	No Concrete except header at access points and side streets	No Concrete except header at access points and side streets
Concrete Curb	L. Ft	22980	1500	1500	1500
Concrete Curb and Gutter	L. Ft	19250	0	0	0
Concrete Sidewalk	Sq. Ft	83200	0	0	0
Concrete Wheelchair Ramp	Ea.	26	0	0	0
Concrete Driveway	Sq. Ft	4200	0	0	0
Noise Barrier Walls					
General Assumption: Lower existing noise report levels by 3 db and remove walls when possible			Highest db is 66.3 so with a 3 db drop, all fall below 64	Highest db is 66.3 so with a 3 db drop, all fall below 64	Highest db is 66.3 so with a 3 db drop, all fall below 64
Noise Walls	L. Ft	7000	0	0	0
Slope Protection					
General Assumption: Eagle Point runs with .25:1 slopes from clear zone to existing ground, Reduce fill slope area by 1/2 since some can be graded and not walls					
Cut Wall Slope Protection	Sq. Ft		59750	44710	25890
Fill Wall Slope Protection	Sq. Ft		35110	22355	4480
25% Contingency	Sq. Ft		23715	16766	7593
Total Slope Walls	**Sq. Ft**	**138175**	**118575**	**83831**	**37963**
Retaining Wall (2 - 5 ft high)	**L. Ft**	**0**	**0**	**1580**	**4498**

RIVER ROAD, CRAYCROFT ROAD TO SABINO CANYON ROAD

PAVING IMPROVEMENT

OPINION OF PROBABLE CONSTRUCTION COST

ITEM	Sunrise Drive 3 Lane Minimized TOTAL COST	Lin Ft 10000 Cost Per Lin Ft	Kolb Road 3 Lane New TOTAL COST	Lin Ft 10400 Cost Per Lin Ft	Craycroft Road 3 Lane Overlay TOTAL COST	Lin Ft 13400 Cost Per Lin Ft	Avg Cost Per Lin Ft	River Cost Per Lin Ft	River Road 3 Lane 11150 TOTAL COST	
NPDES	$50,000	$5	$65,000	$6	$25,000	$2	$4	$4	$48,747	
CLEARING AND GRUBBING	$350,000	$35	$10,000	$1	$38,000	$3	$13	$13	$144,197	
REMOVAL OF STRUCTURES AND OBSTRUCTIONS	$420,000	$42	$200,605	$19	$85,000	$6	$23	$23	$251,366	
ROADWAY EXCAVATION	$186,000	$19	$1,370,250	$132	$565,000	$42	$64	$50	$557,500	
PAVEMENT	$1,297,900	$130	$610,600	$59	$1,000,000	$75	$88	$88	$977,961	
DRAINAGE	$180,000	$18	$1,148,790	$110	$481,000	$36	$55	$40	$446,000	
STRUCTURES	$0	$0	$708,160	$68	$1,191,000	$89	$52	$70	$780,500	
MISC. UTILITY RELOCATIONS	$100,000	$10	$125,000	$12	$0	$0	$7	$11	$122,650	
MAINTENANCE AND PROTECTION OF TRAFFIC	$150,000	$15	$600,000	$58	$40,000	$3	$25	$20	$223,000	
FURNISH AND INSTALL TEMPORARY TRAFFIC CONTROL DEVICES	$300,000	$30	$910,000	$88	$308,000	$23	$47	$35	$390,250	
PAVEMENT MARKINGS	$80,000	$8	$83,603	$8	$40,000	$3	$6	$7	$78,050	
TRAFFIC SIGNALS	$340,000	$34	$150,000	$14	$450,000	$34	$27	$27	$304,786	
LANDSCAPE	$480,000	$48	$282,880	$27	$505,000	$38	$38	$38	$419,562	
SEWER RELOCATION	$100,000	$10	$130,814	$13	$15,000	$1	$8	$10	$111,500	
WATER RELOCATION	$1,000,000	$100	$620,658	$60	$80,000	$6	$55	$55	$615,661	
MOBILIZATION	$400,000	$40	$450,000	$43	$250,000	$19	$34	$34	$378,825	
CONCRETE ITEMS	$12,000	$1	$515,510	$50	$77,000	$6	$19	$6	$66,900	
NOISE BARRIER WALL	$0	$0	$0	$0	$0	$0	$0	$0	$0	
SLOPE PROTECTION	$1,328,705	$133	$225,500	$22	$0	$0	$52	$95	$1,059,250	
RETAINING WALL	$1,124,500	$112	$37,500	$4	$875,000	$65	$60	$85	$947,750	
INCIDENTAL ITEMS	$150,000	$15	$535,400	$51	$185,000	$14	$27	$27	$298,399	
SUBTOTAL	$8,049,105	$805	$8,780,270	$844	$6,210,000	$463	$704		$8,222,853	$737
CONTINGENCIES	$1,609,821	$161	$2,633,930	$253	$5,665,000	$423	$279		$2,466,856	$221
LAND	$0		$0		$800,000				$1,000,000	
TOTAL	**$9,658,926**	$966	**$11,414,200**	$1,098	**$12,675,000**	$946	$1,003		**$11,689,709**	$1,048

River Road Pavement Calcs

From Craycroft to End of Existing 3 Lane Section

Existing Width (Ft.)	Length (Ft.)	Existing Pavement Area (Sq. Ft.)	New Proposed Width (Ft.)	New Pavement Area (Sq. Ft.)
42	1922	***80724***	60	**115320**

From End of 3 Lane Section to Sabino Canyon

Existing Width (Ft.)	Length (Ft.)	Existing Pavement Area (Sq. Ft.)	New Proposed Width (Ft.)	New Pavement Area (Sq. Ft.)
30	9222	***276660***	48	**442656**

Existing Pavement	357,384	Sq Ft
Plus 10%	35,738	Sq Ft
Total Existing	**393,122**	**Sq Ft**

New Pavement	557,976	Sq Ft
Plus 10%	55,798	Sq Ft
Total New	**613,774**	**Sq Ft**

RIVER ROAD
ROW Needed to Have 50' per Side of CL

Additional 5' RW Needed
From Book 17, Page 5, Sheet 2

Lot	Parcel #	Length	Area (Sq Ft)
29	114-37-0290	(65+25)x5	450
35	114-37-0350	(155+25)x5	900
36	114-37-0360	(150+25)x5	875
25	114-37-0250	(181+25)x5	1030
26	114-37-0260	(190)x5	950
27	114-37-0270	(180)x5	900
28	114-37-0280	(180)x5	900
Sub-Total		**(1201)x5**	**6005**

Additional 20' RW Needed
Lengths for these were measured using MapGuide

Ref. #	Parcel #	Length	Area (Sq Ft)
1*	114-35-0490	(150+25)x20	3500
2*	114-35-050A	(295)x20	5900
3*	114-35-0510	(275)x20	5500
4*	114-36-0020	(355)x20	7100
Sub-Total		**(1100)x20**	**22000**

Total Area	**28005**
Total Parcels	**11**