F. ANN RODRIGUEZ, RECORDER
Recorded By: ACA
DEPUTY RECORDER
4948

P0230
PIMA CO CLERK OF THE BOARD
PICKUP

SEQUENCE: 20173550707
NO. PAGES: 38
12/21/2017
18:00:00

ORDINANCE 2017- 47

AN ORDINANCE OF THE BOARD OF SUPERVISORS OF PIMA COUNTY, ARIZONA, RELATING TO TRAFFIC AND HIGHWAYS; REPEALING PIMA COUNTY CODE, CHAPTER 10.36 (LOAD LIMITS); AND AMENDING TITLE 10 (TRAFFIC AND HIGHWAYS) TO ADD A NEW CHAPTER 10.36 (OVERSIZE AND OVERWEIGHT SPECIAL PERMITS) FOR THE PURPOSE OF ADOPTING RULES SUBSTANTIALLY IDENTICAL TO RULES ADOPTED BY THE ARIZONA DEPARTMENT OF TRANSPORTATION.

THE BOARD OF SUPERVISORS OF PIMA COUNTY, ARIZONA FINDS THAT:

1. Pima County Code Chapter 10.36 provides regulations for load limits on Pima County highways.
2. Pima County ("County") is authorized by Arizona Revised Statutes (A.R.S.) § 28-1103 to issue a special permit authorizing the operation and moving of a vehicle or combination of vehicles of a size or weight of vehicle or load exceeding the maximum specified by state law.
3. Effective August 9, 2017, the Arizona State Legislature enacted legislation revising A.R.S. § 28-1103. The revised statute now requires that cities, towns, and counties adopt and enforce ordinances substantially identical to rules adopted by Arizona Department of Transportation ("ADOT") relating to oversize or overweight commercial vehicles and codified at Arizona Administrative Code, Title 17, Chapter 6.
4. In order to comply with state law, it necessary to repeal the existing Pima County Code Chapter 10.36 and replace it with a new version adopting rules substantially identical to ADOT rules related to oversize and overweight commercial vehicles.

BE IT ORDAINED BY THE BOARD OF SUPERVISORS OF PIMA COUNTY, ARIZONA,

SECTION 1. Pima County Code, Chapter 10.36 (Load Limits) is repealed.

SECTION 2. Pima County Code, Title 10 Traffic and Highways, is hereby amended to add Chapter 10.36 (Oversize and Overweight Special Permits) as follows:

Chapter 10.36

OVERSIZE AND OVERWEIGHT SPECIAL PERMITS

Sections:

10.36.010. General Provision-Definitions-Time of day.
10.36.020. Threshold dimensions-Special permit exemptions.
10.36.030. General application procedure for special permits.
10.36.040. Additional special permit requirements and restriction - Engineering Analysis.
10.36.050. Special permit limitation.
10.36.060. Special permit extension - Confiscation.
10.36.070. Traffic control plan.
10.36.080. Special permit denial.
10.36.090. Liability.
10.36.100. Administrative Appeal.
10.29.110. Emergency Operation Provision.
10.36.210. Special permit; fee schedule.
10.36.310. General safety requirements.
10.36.320. Warning flag requirements.
10.36.330. Sign requirements.
10.36.340. Lighting device requirements.
10.36.350. Escort vehicles.
10.36.360. Traffic control provisions.
10.36.370. Projecting Load or Vehicle.
10.36.380. Permittee or Driver Obligation to Notify Utility Companies of Overheight Transport.
10.36.410. General highway operations.
10.36.420. Speed restrictions.
10.36.430. Weather restriction - Hazardous conditions.
10.36.440. Special mobile home towing restriction.
10.36.450. Maximum permitted weights.
10.36.460. Highway-specific restrictions, requirements, conditions, and allowances.
10.36.510. Envelope permit required recordkeeping.
10.36.520. Envelope permit suspension.
10.36.530. Envelope permit reapplication.

Article1. General Provisions

10.36.010. General provision - Definitions -Time of day.

A. The Department shall issue and regulate oversize and overweight special permits as provided under this Chapter.

B. Definitions. In addition to the definitions prescribed under A.R.S. § 28-101 and § 28-601, the following terms apply to this Chapter:
   1. "AAC" means Arizona Administrative Code.
   2. "AASHTO" means the American Association of State Highway and Transportation Officials.
   3. "PCDOT" means the Pima County Department of Transportation.
   4. "Applicant" means a person or entity seeking to obtain a special permit or envelope permit from the Department.

5. "Certified law enforcement officer" means a person who is an active duty Arizona peace officer standards and training board certified peace officer.
7. "Combination vehicle" means a truck or truck tractor and semitrailer and any trailer that it tows but does not include a forklift designed for the purpose of loading or unloading the truck, trailer or semitrailer excluding mobile homes.
8. "Department" means the Pima County Department of Transportation.
9. "Director" means the County Engineer.
11. "Envelope" has the same meaning as prescribed under A.R.S. § 28-1141 encompassing the outermost dimensions of a load or vehicle as prescribed under A.R.S. § 28-1144, without exceeding the maximum permitted weight computations for overweight axle group weight distribution as provided under 10.36.450.
12. "Envelope permit" has the same meaning as prescribed under A.R.S. § 28-1141, which:
    a. Restricts the loads to non-reducible only,
    b. Allows unlimited trips within the permit's validity period,
    c. Allows the permitted carrier unlimited load changes,
    d. Requires a transported load to meet envelope dimensional criteria,
    e. Restricts operation to certain routes, and
    f. Excludes the transporting of a mobile home.
13. "Established place of business" means a permanent site or location where an oversize or overweight special permit holder conducts business.
14. "Highway" has the same meaning as prescribed under A.R.S. § 28-101, "street" or "highway".
15. "Highway feature" means a roadway, structure, traffic control device, right-of-way, or any item connected with highway travel.
16. "Law enforcement escort" means a uniformed certified law enforcement officer in a fully marked patrol vehicle that accompanies an oversize or overweight special permitted vehicle.
17. "Legal weight" means within the maximum gross weight limitations prescribed under A.R.S. § 28-1100 and 10.36.020, Table 1.
18. "Mobile home" has the same meaning as prescribed under A.R.S. § 28-2001, which encompasses both a mobile home and a manufactured home as more specifically prescribed under A.R.S. § 41-2142.
19. "Mountain Standard Time" means the standard time in Arizona as prescribed under 49 CFR 71 and A.R.S. § 1-242.
20. "Non-reducible load or vehicle" has the same meaning as prescribed under 23 CFR 658.5, "nondivisible load or vehicle".
21. "Oversize" means a size of vehicle, combination of vehicles, or vehicle and load combination that exceeds a maximum size limitation provided under A.R.S. Title 28, Chapter 3, Article 18 or 19.
22. "Overweight" means a weight of vehicle, combination of vehicles, or vehicle and load combination that exceeds a maximum weight limitation provided under A.R.S. Title 28, Chapter 3, Article 18 or 19.
23. "Permittee" means a person or entity to whom the Department issues an oversize or overweight special permit or envelope permit under this Chapter, and who is responsible for meeting the obligations, responsibilities, and specifications indicated on the permit.
24. "Person" has the same meaning as prescribed under A.R.S. § 28-5201.
25. "Pounds per inch of tire width" means a measure of load restriction based on rated tire size, which is determined by dividing the weight carried by an axle group, in pounds, by the number of tires in the group and dividing that result by the manufacturer's rated tire width indicated on the sidewall of the tire, or in the absence of sidewall marking, the load rating specified in any publication of an organization listed under 49 CFR 571.119, Federal Motor Carrier Safety Standard No. 119.

26. "Power unit" has the same meaning as prescribed under A.R.S. § 28-1141.
27. "Public weighmaster" has the same meaning as prescribed under A.R.S. § 41-2051.
28. "Special permit" means a document issued by the Department under A.R.S. § 28-1103, which authorizes the permittee to operate or transport an oversize, overweight, or oversize and overweight vehicle, combination of vehicles, or vehicle and load combination on a county highway, subject to the terms and conditions of the permit.
29. "Special permitted vehicle" means the vehicle, combination of vehicles, or vehicle and load combination described to the Department, as required under A.R.S. § 28-1104, on application for a special permit.
30. "Specified load" means the dimensions and weights a special permit applicant declares to the Department, as provided under A.R.S. § 28-1104, regarding any item or series of items to be transported throughout an entire permit period.
31. "Sunrise" and "sunset" have the same meaning and daily calculation as prescribed by the United States Naval Observatory (USNO), which: The Department uses to determine normal permit transport start and stop times as provided under 10.36.410; and an interested person may access on the Internet from the USNO at http://aa.usno.navy.mil, or in hard copy format from the Arizona Central Commercial Permits office.

C. In this Chapter, a time of day prescribed is Mountain Standard Time as defined under subsection (B) except where a county highway traverses a tribal nation that adopts Daylight Saving Time under 49 CFR 71.2.

10.36.020. Threshold dimensions - Special permit exemptions.

A. Unless exempt under this Section or A.R.S. § 28-1091(C), § 28-1093(D), or § 28-1095(A)(6), a person shall obtain and carry an oversize or overweight special permit issued by the Department under this Chapter if transporting a vehicle or load exceeding any dimension provided under Table 1 on a county highway under the jurisdiction of the Department.

B. A permittee and a driver of an oversize or overweight special permitted vehicle shall comply with all applicable:
   1. Safety requirements provided under Article 3, and
   2. Transport provisions provided under Article 4.

C. An oversize or overweight special permit is not required if crossing a county highway at a level grade and no highway structures are involved.

D. An oversize or overweight special permit is not required for snow removal equipment operated by one of the following:
   1. An Arizona state agency,
   2. An Arizona county,
   3. An Arizona city, or
   4. An Arizona municipality other than a city.

E. The special permit exemption provided under subsection (D) applies only to snow removal equipment traveling on its own wheels and:
   1. Operating for the purpose of clearing snow or ice,
   2. Traveling to a facility for repair, or
   3. Traveling to a location used for the purpose of loading or unloading de-icing materials.

F. The operator of an oversize or overweight vehicle exempt from the special permit requirement under this Section shall comply with all applicable safety requirements provided under Article 3 unless otherwise prescribed by statute.

Table 1. Threshold Dimensions
The Department shall issue a special permit, as provided under Article 2, for each vehicle, or vehicle and load combination, exceeding any of the following maximum limits:

Width (A.R.S. § 28-1093)		
Vehicles operating on the county highway system	8' 6"	
Height (A.R.S. § 28-1094)		
Vehicles operating on the county highway system	13' 6"	
Length (A.R.S. §§ 28-1095 and 28-1097)		
Straight trucks		40'
Truck tractor - semitrailer combination; or Truck tractor -	Interstate system	57' 6" semitrailer
Truck tractor - semitrailer combination; or Truck tractor - semitrailer - forklift combination	Other highways	53' semitrailer; or 65' overall combination if more than 53'
Truck tractor - semitrailer - full trailer combination		28' 6" per trailer
Vehicle transporter combination		75'
Overhang	Front of vehicle Rear of vehicle or trailer	3' 6'
Weight (A.R.S. § 28-1100) Allowable weight shall be determined using the listed limits or the manufacturer's weight rating, whichever is less.		
Single axle		20,000 lbs.
Tandem axle		34,000 lbs.
Steering axle		20,000 lbs.
Gross weight; five axles or more Maximum allowable axle group weights are computed using the formula prescribed under A.R.S. § 28-1100(A)(4)		80,000 lbs.

10.36.030. General application procedure for special permits.

A. An applicant shall apply to the Department using one of the following methods.
   1. For an oversize or overweight special permit:
      a. Complete an oversize/overweight special permit application form, available on the Department's web site at http://webcms.pima.gov/cms/One.aspx?portalId=169&pageId=67525 and submit the written application by fax, mail, or deliver to the Pima County Department of Transportation; or

b. Complete an oversize/overweight special permit application form and submit the written application via email to oversizeoverweightpermit@pima.gov.

2. For an envelope permit:
   a. Complete an envelope permit application form, available on the Department's website at http://webcms.pima.gov/cms/One.aspx?portalId=169&pageId=67525 and fax, mail, or deliver the written application to the Pima County Department of Transportation; or
   b. Complete an envelope permit application form, available on the Department's website and submit the written application via email to oversizeoverweightpermit@pima.gov.

B. Unless otherwise provided under this Chapter, an applicant for an oversize or overweight special permit or envelope permit shall provide to the Department, at the time of application, all applicable fees and information required by the Department including:
   1. Company related information:
      a. Name and address of the applicant's principal or established place of business; and
      b. Name, phone number, and email address of an official company representative;
   2. Power unit related information:
      a. Vehicle make, body style, and year;
      b. Vehicle identification number;
      c. License plate number; and
      d. Base jurisdiction - state of registration;
   3. Vehicle and load combination related information:
      a. Trailer plate number(s);
      b. Total number of axles;
      c. Overall gross weight;
      d. Overall length, width, and height; and
      e. Length of front and rear overhang if applicable;
   4. Load related information:
      a. Specific load description;
      b. Route description including but not limited to street names, direction, and distances along each street;
      c. Route survey identifying all obstructions that may be subject to disturbance or damage and measures to mitigate the disturbance or damage. No County improvement shall be altered in anyway without approval of the Department;
      d. Starting and ending location within the county;
      e. If the load is overweight:
         i. Axle spacing measurements,
         ii. Axle width measurements,
         iii. Number of tires per axle,
         iv. Weight measurements per axle, and
         v. Width of each tire;
         vi. If the load is a mobile home:
         vii. Complete serial number;
         viii. Evidence of payment of all applicable ad valorem taxes, as required under A.R.S. § 28- 1104, in the form of a 504 tax

clearance permit issued by the county in which the mobile home is currently located; and

5. Proof of valid registration that complies with the requirements of A.R.S. § 28-2153.
6. ADOT permit number and copy of state permit (if applicable).

C. An applicant for an oversize or overweight special permit shall certify to the Department that all information provided on the application is true and correct.

D. An applicant requesting a special permit for transport of a specific non-reducible vehicle and load combination that exceeds 250,000 lbs. the maximum permitted weight computations for overweight axle group weight distribution as provided under 10.36.450, shall follow the application procedures provided under 10.36.040.

10.36.040. Additional special permit requirements and restriction - Engineering Analysis.

A. To promote safe transport of oversize and overweight vehicles, or vehicle and load combinations, the Department shall evaluate each special permit application on a case-by-case basis, whether additional permit requirements or restrictions are appropriate and necessary as a condition of permit approval. The Department's decision to require additional permit restrictions shall be based on its consideration of:
   1. Bridge capacities;
   2. Load size and weight;
   3. Pavement stress;
   4. Road width, grade, and condition; and
   5. Traffic dynamics of the proposed route.

B. The Department shall require a special permit applicant to obtain an engineering analysis for transport of an overweight vehicle or vehicle and load combination:
   1. Exceeding 250,000 pounds;
   2. Exceeding the maximum permitted weight computations for overweight axle group weight distribution as provided under 10.36.450; or
   3. Exceeding a bridge weight restriction provided under 10.36.460, Table 4.

C. If the Department requires an engineering analysis of a structure as a condition of permit approval, a special permit applicant shall obtain an analysis prepared by an engineer at the applicant's own expense.
   1. An engineer registered by the Arizona State Board of Technical Registration in structural or civil engineering, as prescribed under A.R.S. Title 32, Chapter 1, shall prepare an engineering analysis of the proposed structure according to industry standards.
   2. The special permit applicant shall submit to the Department for review any engineering analysis prepared by an engineer.
   3. An engineering analysis that complies to industry standards and prepared in accordance with the following publications:
      a. The most recently published edition of the AASHTO Manual for Bridge Evaluation, including all interims, standards, or guidelines;
      b. The most recently published edition of the AASHTO Load and Resistance Factor Design (LRFD) - Bridge Design Specifications, including all interims, standards, or guidelines; and
      c. The ADOT Bridge Load Rating Guidelines and Bridge Design Guidelines.
   4. The engineer shall certify that an applicant's overweight vehicle will not overstress or damage any element of:
      a. A highway structure, or
      b. Any other county property.

D. An applicant may resubmit an engineering analysis approved by the Department within the previous 12 months if:
   1. The size and weight of the applicant's vehicle and load are identical to the previously approved permit application;
   2. The segments of the applicant's proposed route are within the outer limits of the previously approved route; and
   3. The condition of the highway structure or other county property has not changed.

E. The Department shall conduct a separate review and approval process for each engineering analysis submitted under this Section.

F. If the applicant's engineering analysis shows that a highway structure will not support the overweight vehicle as requested, the Department shall deny the application for a special permit.

G. If the Department determines a potential traffic safety risk exists, a special permit applicant shall submit to the Department a comprehensive traffic control plan as provided under 10.36.070.

H. The Department of transportation, Sheriff's Department, Department of Public Safety, or any other law enforcement entity lawfully authorized to provide certified weights may weigh a special permitted vehicle and load exceeding 250,000 pounds, or require the applicant to have the vehicle and load weighed as prescribed under A.R.S. § 28-1102.

10.36.050. Special permit limitation.

The Department shall issue oversize and overweight special permits for Pima County highways. A permittee shall apply separately with an applicable political subdivision or tribal nation for permission to operate on routes outside of unincorporated Pima County.

10.36.060. Special permit extension - Confiscation.

A. Upon request by a permittee, the Department shall authorize a one-time extension of up to four days for a single-trip special permit if:
   1. The permittee needs to exchange a permitted vehicle for another due to mechanical failure, or
   2. Transport by the permitted vehicle is delayed by inclement weather.

B. Except as provided under subsection (C), a peace officer designated by the Director may confiscate an oversize or overweight special permit before its expiration date if the permittee or driver is cited for a violation of this Chapter.

C. The Director may suspend, revoke, and retrieve an envelope permit as provided under 10.36.530.

10.36.070. Traffic control plan.

A. To promote safe transport of oversize and overweight vehicles, or vehicle and load combinations, the Department shall evaluate each special permit application to determine, on a case-by-case basis, whether a potential traffic safety risk exists that may require a comprehensive traffic control plan as a condition of permit approval. The Department's decision to require a comprehensive traffic control plan shall be based on its consideration of:
   1. Bridge capacities;
   2. Load size and weight;
   3. Pavement stress;
   4. Road width, grade, and condition; and
   5. Traffic dynamics of the proposed route.

B. If the Department determines a potential traffic safety risk exists, a special permit applicant shall submit to the Department at the time of special permit application, a comprehensive traffic control plan prepared as follows:

1. Identify all roadway features located along the proposed route that may inhibit movement of the vehicle or vehicle and load combination;
2. Identify all obstructions that may be subject to potential disturbance or damage;
3. Specify how all structures, delineators, foliage, and official traffic control devices will be managed or avoided;
4. Specify all available pullout points located along the proposed route;
5. Specify how all side traffic will be managed;
6. Specify the rate of speed at which the load will travel along the proposed route;
7. Specify the approximate times when the load will be in transit; and
8. Provide a contingency plan to be followed in the event of a breakdown.

C. As a condition of special permit issuance, the Department may require an applicant to coordinate use of one or more law enforcement escorts as needed to ensure public safety while transporting a proposed load.

10.36.080. Special permit denial.

The Department shall deny an oversize or overweight special permit application, or revoke and confiscate a previously approved special permit, if:

1. The proposed transport route or a structure on the route is:
   a. Unable to bear the size or weight of the transport vehicle and load according to the maximum permitted weight computations for overweight axle group weight distribution as provided under 10.36.450,
   b. Under repair, or
   c. Temporarily closed due to a hazardous condition listed under 10.36.430(B);
2. An applicant for a permit to transport a mobile home does not provide written proof of ad valorem tax payment, evidence of certification of compliance from the Arizona Department of Housing, Office of Manufactured Housing for mobile homes manufactured prior to June 15, 1976, or clearance as required under A.R.S. § 28-1104; or
3. The Department determines that the special permit applicant made a material misrepresentation or misstatement on the permit application or any other document submitted to the Department in support of the permit application.

10.36.090. Liability.

A person who operates an oversize or overweight special permitted vehicle and a person who causes the vehicle to be operated shall be liable for any damage caused to a county highway by the oversize or overweight vehicle or load during transport as provided under A.R.S. § 28-1107.

10.36.100. Administrative Appeal.

A. If a special permit application is denied, a previously issued special permit is revoked and confiscated, or a permit applicant believes a condition associated with an issued special permit is invalid, the permit applicant may appeal by submitting an Administrative Appeal Application Form via email to oversizeoverweightpermit@pima.gov. The Administrative Appeal Application Form must be in a form prepared by the Department and available on the Department's website at http://webcms.pima.gov/cms/One.aspx?portalId=169&pageId=67525. In order for the appeal to be considered, the permit applicant must:
   1. Submit the Administrative Appeal Application Form within seven calendar days of the Department's denial or revocation and confiscation of the special permit that is the subject of the appeal, or, in the event of a challenge to a permit condition, within seven calendar days of issuance of the special permit or application that is the subject of the

appeal;

2. Specify either the permit that has been denied or revoked and confiscated or the permit condition that the permit applicant challenges;
3. Explain the basis for the permit applicant's appeal.

B. The Director or designee will review the Administrative Appeal Application Form and issue a written decision to the permit applicant, based on the written submission, within seven calendar days of the date the Administrative Appeal Application Form was submitted.

C. A permit applicant aggrieved by a decision of the Director or designee under § 10.36.100(B) may, within seven calendar days of receiving that decision, appeal in writing to the County Administrator. The County Administrator will decide the appeal based on the written submission and issue a written decision to the permit applicant within seven calendar days. The County Administrator's decision is final.

10.29.110. Emergency Operation Provision.

A. In time of statewide or local emergency that affects public welfare or safety the Director may authorize transport of an oversize or overweight vehicle or load without a special permit for purposes of relief or repair.

B. Authorization for emergency operation under this Section may be obtained by contacting the Pima County Department of Transportation.

Article 2. Special Permits and Fees.

10.36.210. Special permit; fee schedule.

A. The Department shall issue a multiple or single trip oversize, overweight, or oversize and overweight special permit for a specified non-reducible vehicle, combination of vehicles, or vehicle and load combination that exceeds the threshold dimensions or weights provided under 10.36.020, Table 1:

Special Permit

Overweight (greater than 80,000 lbs.)	30 day
Oversize (exceeds 8.5 ft. width or 13.5 ft. height)	1 day
	30 day
Overweight and Oversize	30 day
Additional Review or Engineering	NA

B. An applicant for an oversize, overweight, or oversize and overweight special permit shall apply to the Department and submit appropriate fees using the application procedure provided under 10.36.030.

C. A permittee or driver of an oversize, overweight, or oversize and overweight vehicle, combination of vehicles, or vehicle and load combination shall not cross a structure listed under 10.36.460, Table 4, unless operating in full compliance with all indicated restrictions and requirements.

D. Pertinent charges for the above permit shall be set forth by a fee schedule available on the Department's website approved by the board of supervisors and amended from time to time.

10.36.290 – Envelope permits - non-specific and non-reducible vehicle or load.

A. The Department shall issue an annual oversize, overweight, or oversize and overweight envelope permit, according to the following criteria for a non-specific and non-reducible vehicle or load that meets the definition of envelope permit under 10.36.010, and does not exceed 250,000 lbs the maximum permitted weight computations for overweight axle group weight distribution as provided under 10.36.450:

Envelope Permit

Vehicle or load description	A non-specific and non-reducible vehicle or load that meets the definition of envelope permit under 10.36.010 and is within the maximum permitted weights provided under 10.36.450
Permit	Annual

B. An applicant for an oversize, overweight, or oversize and overweight envelope permit shall apply to the Department and submit appropriate fees using the application procedure provided under 10.36.030.

C. An applicant for an oversize, overweight, or oversize and overweight envelope permit under subsection (A) for a vehicle that is a self-propelled mobile crane, drilling rig, or similar specialty equipment not exceeding two hundred fifty thousand (250,000) pounds gross weight, fourteen (14) feet in width, sixteen (16) feet in height, and one hundred twenty (120) feet in length shall provide to the Department proof of gross weight:

1. For an initial application, a public weighmaster's certificate of weight and measure issued at a certified public scale once the vehicle is equipped and set for highway travel; or
2. For a renewal application, a certification by the applicant that no dimension has changed and the vehicle does not exceed the originally certified dimensions or weights.

D. A permittee or driver of an oversize, overweight, or oversize and overweight vehicle or load shall not cross a structure listed under 10.36.460, Table 4, unless operating in full compliance with all indicated restrictions and requirements.

E. Pertinent charges for the above permit shall be set forth by a fee schedule available on the Department's website approved by the board of supervisors and amended from time to time.

Article 3. Safety Requirements

10.36.310. General safety requirements.

In addition to the provisions of this Article, a permittee and a driver of an oversize or overweight vehicle permitted under this Chapter, or a person or entity exempt under 10.36.020 (D), shall comply with all federal motor carrier safety regulations incorporated by the state under 17 A.A.C. Chapter 5, Article 2, as applicable to a motor carrier operating in Arizona.

10.36.320. Warning flag requirements.

A. Specifications. Each warning flag attached to an overwidth or overlength load shall be cloth or plastic at least 18 inches square and red or fluorescent orange in color.

B. Display. A permittee or driver of an overwidth or overlength special permitted vehicle and load combination shall display warning flags applicable to the permittee's vehicle and load configuration as indicated under Illustration 1.

Illustration 1. Warning Flag configurations.

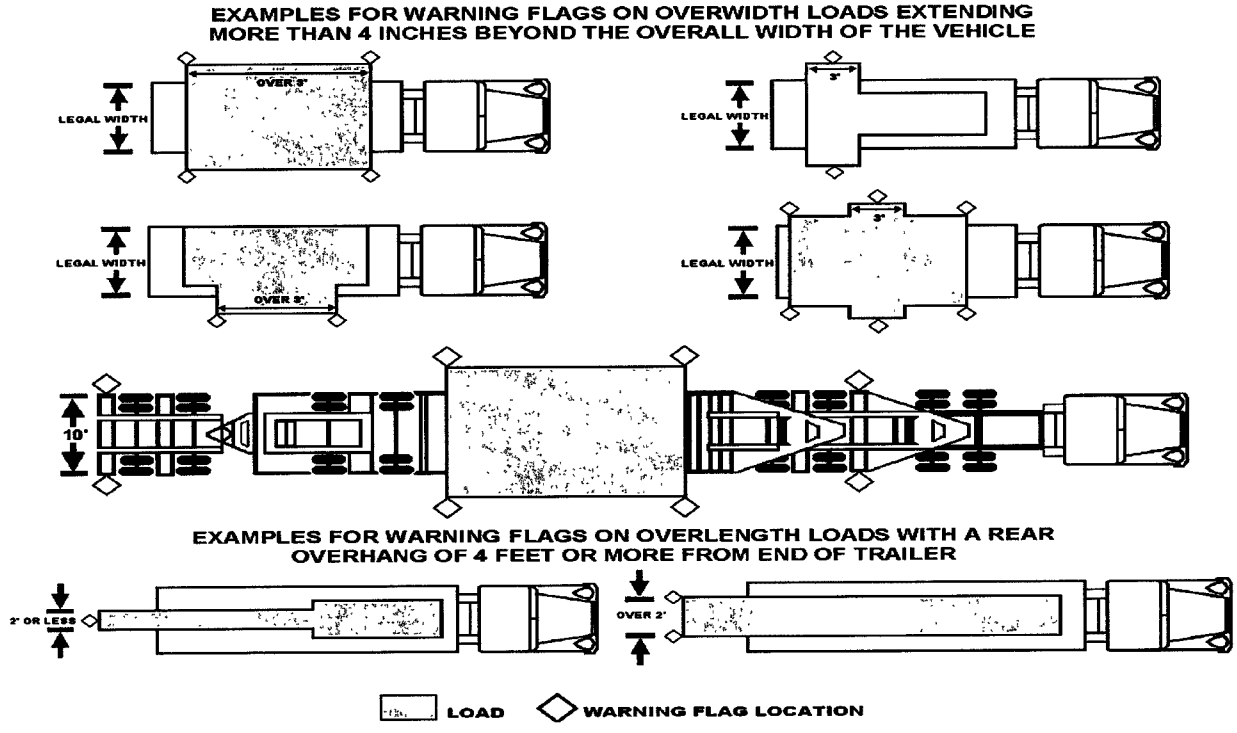

10.36.330. Sign requirements.

A. A permittee shall ensure that an oversize or overweight vehicle or load displays an "OVERSIZE LOAD" sign if the vehicle or load is nine feet or more in width.

B. A permittee shall display an "OVERSIZE LOAD" sign on any oversize or overweight special permitted vehicle or load not specified under subsection (A) if necessary to ensure maximum visibility for public safety.

C. An "OVERSIZE LOAD" sign shall meet construction specifications provided under Illustration 2 at a minimum.

D. A permittee shall display required "OVERSIZE LOAD" signs that are:

   a. Mounted to the front or roof of the power unit,
   b. Mounted to the rear of the load or loaded vehicle,
   c. Parallel with the road surface from side-to-side,
   d. Readable from left to right, and
   e. Clearly visible from the vehicle's front and rear

E. If a permittee required to display an "OVERSIZE LOAD" sign is not transporting an oversize or overweight load, the permittee shall ensure each sign is not visible to traffic.

Illustration 2. "OVERSIZE LOAD" Sign

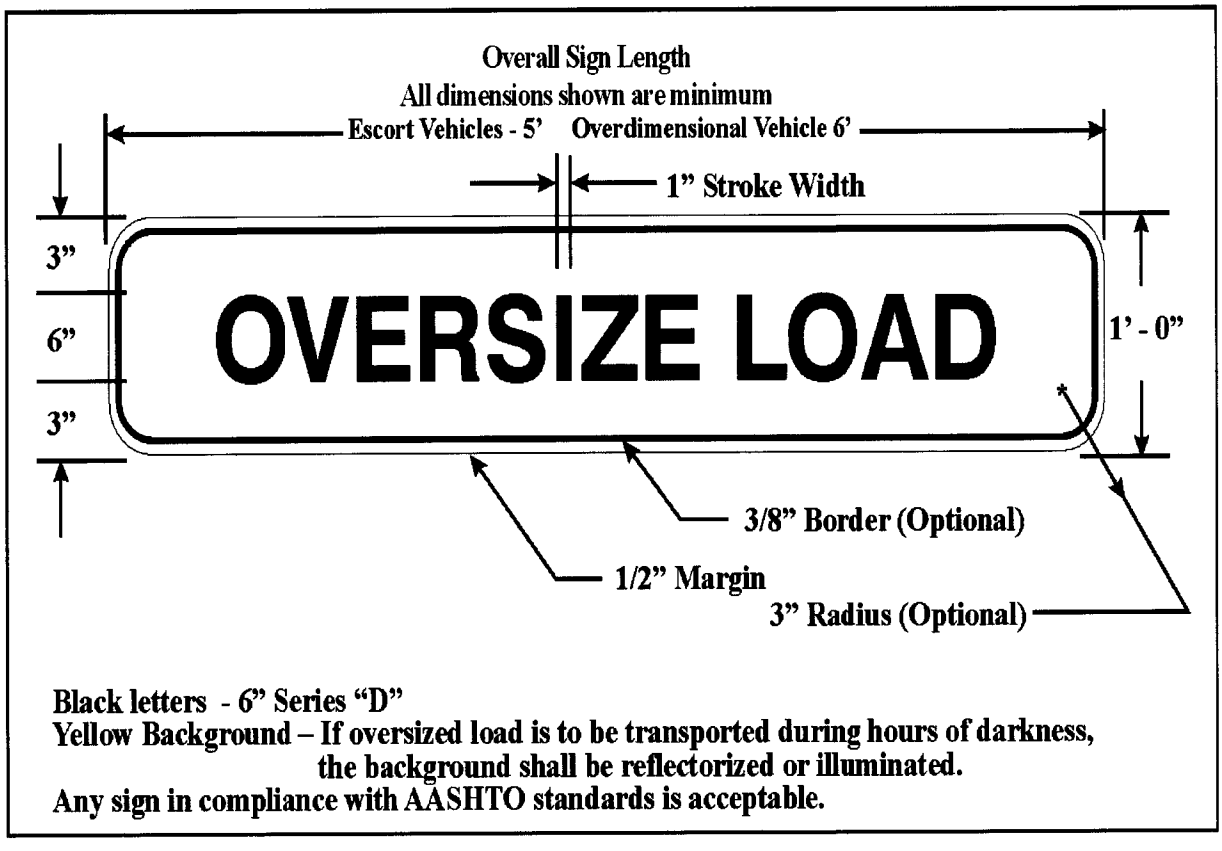

10.36.340. Lighting device requirements.

A. A permittee or driver of an oversize or overweight vehicle or load shall:
   1. Comply with all applicable lighting equipment requirements under A.R.S. Title 28, Chapter 3, Article 16, and 49 CFR 393 as incorporated by reference under A.A.C. R17-5-202; and
   2. Operate with the lighting equipment illuminated as prescribed under A.R.S. §§ 28-922 and 28-935.

B. A permittee or driver of a vehicle transporting a load that projects more than four inches beyond the overall width of the vehicle shall attach safety lighting during nighttime operation according to the requirements provided under Illustration 4, and 10.36.370, that most closely correspond to the permittee's or driver's vehicle and load configuration.

C. A permittee or driver of an oversize load that projects more than three feet in front overhang, or more than four feet in rear overhang, shall attach safety lighting during nighttime operation according to the requirements provided under Illustration 4, and 10.36.370, that most closely correspond to the permittee's or driver's vehicle and load configuration.

Illustration 4. Safety Lighting Configuration

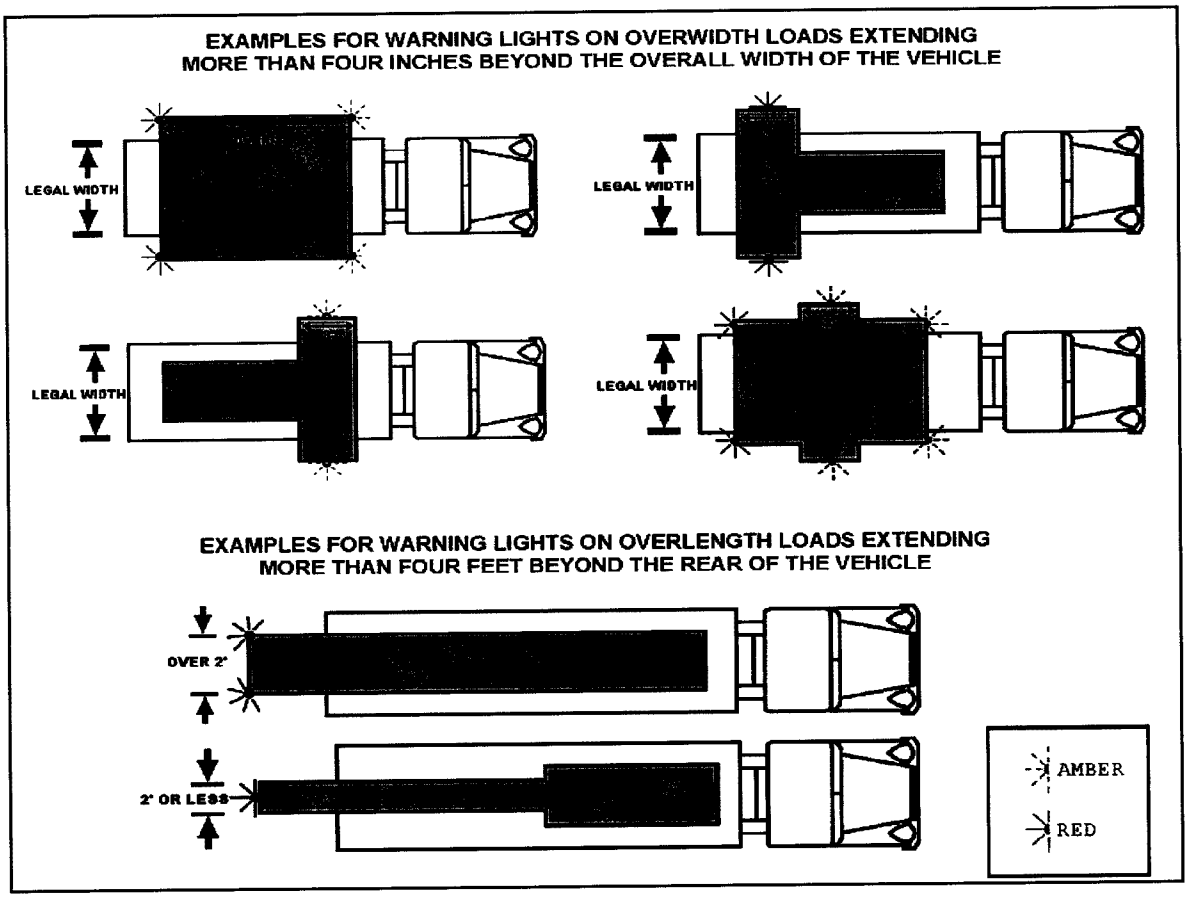

10.36.350. Escort vehicles.

A. Service requirement.

1. A permittee transporting an oversize or overweight vehicle or load shall use all escort vehicles required by the Department as a condition of special permit issuance under this Chapter.
2. The Department may determine whether one or more escort vehicles must accompany an oversize or overweight special permitted vehicle by considering the following in relation to the proposed transport and route:
    a. Roadway dynamics, including surface condition, grade, width, and height limitations;
    b. Overall dimensions of the vehicle and load;
    c. Need for frequent stops;
    d. Concern for public safety; and
    e. Time of transport.
3. According to the criteria applicable under subsection (A)(2), the Department shall require two or more oversize or overweight special permitted vehicles traveling together to be accompanied by at least one escort vehicle per load.

B. Vehicle, operator, and equipment requirements.

1. A vehicle qualifies as an escort vehicle if it:
    a. Is a passenger car or two-axle truck operating as a single unit,

b. Is currently registered, and
c. Meets insurance requirements as provided by law.

2. An escort vehicle operator, except for a law enforcement escort, while in service under this Chapter shall:
   a. Meet all requirements under A.R.S. § 28-1110, and maintain certification through a program that meets the escort vehicle operator training and certification standards of the Commercial Vehicle Safety Alliance or an equivalent program, whether in this state or another state, that meets the same objectives;
   b. Carry in the escort vehicle the same emergency equipment required for a truck, truck tractor, or bus under A.R.S § 28-960 and 49 CFR 393.95, which shall include;
      i. Fire extinguishers;
      ii. Warning devices for stopped vehicles; and
      iii. Emergency staff-mounted warning flags;
   c. Display an "OVERSIZE LOAD" sign:
      i. Constructed for escort vehicles as provided under 10.36.330, Illustration 2;
      ii. Mounted above the vehicle's roofline and visible to approaching traffic from the front and rear;
      iii. Accompanied by two flags, one mounted on each side of the oversize load sign; and
      iv. Concealed when not in use; and
   d. Ensure continuous communication by two-way radio:
      i. Capable of transmitting and receiving a minimum of 1/2 mile; and
      ii. Compatible with the two-way radios used by the driver of the escorted vehicle, law enforcement escorts, and all other accompanying escort vehicles.

C. Operations

1. Lighting requirement. While in service, an escort vehicle operator shall maintain continuous illumination of head- lights and overhead warning lights as prescribed under A.R.S. § 28-947.
2. Lead and follow distance. An escort vehicle operator shall maintain a lead or follow distance from an escorted vehicle that generally does not exceed 1,500 feet on an open state highway or 250 feet in an urban setting. When determining the appropriate lead or follow distance, an escort vehicle operator shall:
   a. Consider traffic density, road conditions, road type, speed, and type of load;
   b. Ensure constant radio communication with all escorts and the escorted vehicle; and
   c. Maintain visual contact with the escorted vehicle at all times.
3. Stop provisions at an intersection with a traffic control signal.
   a. When an oversize or overweight special permitted vehicle is required to stop, the lead-escort vehicle operator shall proceed through the intersection and stop safely off the roadway. The lead-escort vehicle operator shall resume an appropriate lead distance as soon as is safely possible.
   b. When a following-escort vehicle is required to stop, the operator of an oversize or overweight special permitted vehicle shall proceed without stopping. The following-escort vehicle operator shall resume an

appropriate following distance behind the over- size or overweight special permitted vehicle as soon as is safely possible after clearing an intersection.

10.36.360. Traffic control provisions.

A. The Department may require additional traffic control by a uniformed certified law enforcement officer to ensure highway safety. The Department shall consider the criteria under 10.36.350(A) when determining the need for additional traffic control.

B. If the Department requires a law enforcement escort under 10.36.460, Table 4, or as necessary to promote public safety, the permittee or driver of the oversize or overweight special permitted vehicle shall:
   1. Contact law enforcement at least 12 hours before transport to request the appropriate number of uniformed certified law enforcement escorts required for the permitted activity; and
   2. Ensure continuous two-way radio communication during transport with all law enforcement and other escort vehicles required to accompany the permitted vehicle under 10.36.350 and 10.36.370.

C. The permittee or driver of an oversize or overweight special permitted vehicle may use any uniformed certified law enforcement escorts if at least one officer is certified for enforcement of the Federal Motor Carrier Safety Regulations of the U.S. Department of Transportation's Federal Motor Carrier Safety Administration.

10.36.370. Projecting Load or Vehicle.

A. The Department shall require a special permit for transporting a load or vehicle that projects:
   1. Two feet or less, if the projecting portion of the load or vehicle has a thickness of less than 12 inches; or
   2. Three feet or less, if the projecting portion of the load or vehicle has a thickness of 12 inches or more.

B. The Department shall require a special permit for transporting a load that projects from either side of the vehicle:
   1. More than two feet, if the height of the projecting portion of the load has a thickness of less than 12 inches; or
   2. More than three feet, if the height of the projecting portion of the load has a thickness of 12 inches or more.

C. A permittee of a projecting vehicle or load shall have escort vehicle accompaniment as follows:
   1. A front escort vehicle if the front load projection is longer than 20 feet, or
   2. A rear escort vehicle if rear projection is longer than 20 feet.

D. A permittee or driver of a projecting vehicle or load with more than a four foot front or rear overhang shall:
   1. Attach warning flags to the load as provided under 10.36.320 and Illustration 1, for daylight operation; or
   2. Attach safety lighting to the load as provided under 10.36.340 and Illustration 4, for nighttime operation.

E. An integral component removed from a loaded primary object may be transported on the same vehicle bearing the primary object provided the component does not cause the hauling vehicle to exceed a size or weight permitted for the primary object.

10.36.380. Permittee or Driver Obligation to Notify Utility Companies of Overheight Transport.

A permittee or driver shall notify a responsible utility company of possible disturbance or damage, as provided under A.R.S. § 40- 360.43, if overhead utility lines extend across a proposed route and the permitted vehicle or load exceeds the height under 10.36.020, Table 1.

Article 4. Transport Provisions

10.36.410. General highway operations.

A. A permittee or driver of an oversize or overweight special permitted vehicle or vehicle and load combination shall:
   1. Operate no earlier than one-half hour before sunrise and no later than one-half hour after sunset, exact daily times as defined under 10.36.010, except as provided under this Article, or unless the Department otherwise:
      a. Restricts operation on a highway, or
      b. Grants permit-specific alternate operation hours other than those listed under this subsection as a necessary condition to maintain highway safety;
   2. Operate in the rightmost lane of a multi-lane highway if indicated on the special permit except to overtake and pass another vehicle; and
   3. Maintain a minimum distance of 2,000 feet from any other oversize or overweight special permitted vehicle traveling on the same highway in the same direction except when passing.

B. Removal of signs, guardrails or other assets from the right-of-way is not authorized under an oversize or overweight special permit and is illegal under A.R.S. § 28-7053. A separate encroachment permit issued by the Department is required to enter the right-of-way for these purposes or for any reason other than authorized public travel. The activities authorized while in the right-of-way shall be outlined in the encroachment permit.

C. Replacement of any county highway feature moved under an encroachment permit, as a result of the transport of an oversize or overweight vehicle along a traveled route, shall be detailed on the encroachment permit and completed under Department inspection.

D. A permittee and driver of an oversize or overweight special permitted vehicle, prior to commencing transport, shall access and review the most current information on roadway conditions, closures, and restrictions using one of the following methods:
   1. Phone inquiry – county highways dial (520)724-6410, or
   2. Online inquiry – county highways visit http://webcms.pima.gov/cms/One.aspx?portalId=169&pageId=136105

10.36.420. Speed restrictions.

A. A driver of an oversize or overweight vehicle or load shall not exceed the lower maximum speed determined by either of the following:
   1. A speed limit printed on an issued permit, or
   2. A highway posted vehicle-specific speed limit.

B. The Department may order an alternative speed restriction to prevent:
   1. Hazardous traffic conditions, or
   2. Damages to a highway or highway feature.

10.36.430. Weather restriction - Hazardous conditions.

A. Responsibility. A driver of an oversize or overweight vehicle, or vehicle and load combination,

shall:

1. Use the criteria provided under subsection (B) to identify unsafe roadway conditions and discontinue transport until safe to continue, and
2. Comply with all official agency weather-related travel advisories prohibiting oversize or overweight transport.

B. Determining conditions. A driver of an oversize or overweight vehicle, or vehicle and load combination, shall not transport under the following hazardous conditions:

Hazardous Conditions:	**Possible Causes May Include:**
Driver visibility range becomes less than 500 feet	• Blowing dust, falling snow, fog, heavy rain
Road surface condition reduces normal traction	• Snow, ice, flooding
A load destabilizing condition endangers road surface or traffic	• High winds, falling objects

10.36.440. Special mobile home towing restriction.

A. A vehicle towing a mobile home shall have a factory rating that corresponds with the following criteria:

Load measurement criteria	**Towing vehicle factory rating**
10 feet or less in width and 50 feet or less in length, including hitch	1 1/2 tons
More than 10 feet in width or more than 50 feet in length, or both	Two tons; four tires per drive axle and minimum 99 inch wheel base

B. A mobile home transporter shall cover the open side of a mobile home module with plastic sheeting no thinner than 1.5 mil plus a rigid grillwork backing.

10.36.450. Maximum permitted weights.

A. The Department shall use the formulas and computations provided under Tables 3.01 through 3.09, and Illustration 3, to determine the maximum weights allowed on any combination of axles within the distance between the front and rear axle of a given axle group, up to a maximum of 18 feet, when issuing an oversize or overweight special permit for a non-reducible vehicle or load under this Chapter.

Table 3.01. Maximum Permitted Weight Computations: Axle Width - 8 Feet
Overweight Axle Group Chart

Distance between the center of the front axle and the center of the rear axle of a given group.

			Inches											
			0	1	2	3	4	5	6	7	8	9	10	11
Feet	3	A	28,000	28,000	28,000	28,000	28,000	28,000	45,675	45,763	45,850	45,938	46,025	46,113
		B	32,200	32,200	32,200	32,200	32,200	32,200	52,526	52,627	52,728	52,828	52,929	53,029
	4	A	46,200	46,288	46,375	46,463	46,550	46,638	46,725	46,813	46,900	46,988	47,075	47,163
		B	53,130	53,231	53,331	53,432	53,533	53,633	53,734	53,834	53,935	54,036	54,136	54,237
	5	A	47,250	47,338	47,425	47,513	47,600	47,688	47,775	47,863	47,950	48,038	48,125	48,213
		B	54,338	54,438	54,539	54,639	54,740	54,841	54,941	55,042	55,143	55,243	55,344	55,444
	6	A	48,300	48,388	48,475	48,563	48,650	48,738	48,825	48,913	49,000	49,088	49,175	49,263
		B	55,545	55,646	55,746	55,847	55,948	56,048	56,149	56,249	56,350	56,451	56,551	56,652
	7	A	49,350	49,438	49,525	49,613	49,700	49,788	49,875	49,963	50,050	50,138	50,225	50,313
		B	56,753	56,853	56,954	57,054	57,155	57,256	57,356	57,457	57,558	57,658	57,759	57,859
	8	A	50,400	50,488	50,575	50,663	50,750	50,838	50,925	51,013	51,100	51,188	51,275	51,363
		B	57,960	58,061	58,161	58,262	58,363	58,463	58,564	58,664	58,765	58,866	58,966	59,067
	9	A	51,450	51,538	51,625	51,713	51,800	51,888	51,975	52,063	52,150	52,238	52,325	52,413
		B	59,168	59,268	59,369	59,469	59,570	59,671	59,771	59,872	59,973	60,073	60,174	60,274
	10	A	52,500	52,588	52,675	52,763	52,850	52,938	53,025	53,113	53,200	53,288	53,375	53,463
		B	60,375	60,476	60,576	60,677	60,778	60,878	60,979	61,079	61,180	61,281	61,381	61,482
	11	A	53,550	53,638	53,725	53,813	53,900	53,988	54,075	54,163	54,250	54,338	54,425	54,513
		B	61,583	61,683	61,784	61,884	61,985	62,086	62,186	62,287	62,388	62,488	62,589	62,689
	12	A	54,600	54,688	54,775	54,863	54,950	55,038	55,125	55,213	55,300	55,388	55,475	55,563
		B	62,790	62,891	62,991	63,092	63,193	63,293	63,394	63,494	63,595	63,696	63,796	63,897
	13	A	55,650	55,738	55,825	55,913	56,000	56,088	56,175	56,263	56,350	56,438	56,525	56,613
		B	63,998	64,098	64,199	64,299	64,400	64,501	64,601	64,702	64,803	64,903	65,004	65,104
	14	A	56,700	56,788	56,875	56,963	57,050	57,138	57,225	57,313	57,400	57,488	57,575	57,663
		B	65,205	65,306	65,406	65,507	65,608	65,708	65,809	65,909	66,010	66,111	66,211	66,312
	15	A	57,750	57,838	57,925	58,013	58,100	58,188	58,275	58,363	58,450	58,538	58,625	58,713
		B	66,413	66,513	66,614	66,714	66,815	66,916	67,016	67,117	67,218	67,318	67,419	67,519
	16	A	58,800	58,888	58,975	59,063	59,150	59,238	59,325	59,413	59,500	59,588	59,675	59,763
		B	67,620	67,721	67,821	67,922	68,023	68,123	68,224	68,324	68,425	68,526	68,626	68,727
	17	A	59,850	59,938	60,025	60,113	60,200	60,288	60,375	60,463	60,550	60,638	60,725	60,813
		B	68,828	68,928	69,029	69,129	69,230	69,331	69,431	69,532	69,633	69,733	69,834	69,934
	18	A	60,900											
		B	70,035											

Computation Formula: Weight = 1.5 X 700 (L + 40)
(L = Distance between the center of the front axle and the center of the rear axle of a given group.)

Legend:
Line A: Four tires per axle or two 14-inch wide tires. Value is the formula weight only.
Line B: Eight tires per axle or four 14-inch wide tires. Value is the formula weight plus 15%.

Table 3.02. Maximum Permitted Weight Computations: Axle Width - 8 Feet 3 Inches
Overweight Axle Group Chart
Distance between the center of the front axle and the center of the rear axle of a given group.

			Inches											
			0	1	2	3	4	5	6	7	8	9	10	11
Feet	3	A	28,525	28,525	28,525	28,525	28,525	28,525	46,531	46,621	46,710	46,799	46,888	46,977
		B	32,550	32,550	32,550	32,550	32,550	32,550	53,097	53,199	53,301	53,402	53,504	53,606
	4	A	47,066	47,155	47,245	47,334	47,423	47,512	47,601	47,690	47,779	47,869	47,958	48,047
		B	53,708	53,809	53,911	54,013	54,114	54,216	54,318	54,420	54,521	54,623	54,725	54,826
	5	A	48,136	48,225	48,314	48,403	48,493	48,582	48,671	48,760	48,849	48,938	49,027	49,116
		B	54,928	55,030	55,132	55,233	55,335	55,437	55,538	55,640	55,742	55,844	55,945	56,047
	6	A	49,206	49,295	49,384	49,473	49,562	49,651	49,740	49,830	49,919	50,008	50,097	50,186
		B	56,149	56,250	56,352	56,454	56,556	56,657	56,759	56,861	56,963	57,064	57,166	57,268
	7	A	50,275	50,364	50,454	50,543	50,632	50,721	50,810	50,899	50,988	51,078	51,167	51,256
		B	57,369	57,471	57,573	57,675	57,776	57,878	57,980	58,081	58,183	58,285	58,387	58,488
	8	A	51,345	51,434	51,523	51,612	51,702	51,791	51,880	51,969	52,058	52,147	52,236	52,326
		B	58,590	58,692	58,793	58,895	58,997	59,099	59,200	59,302	59,404	59,505	59,607	59,709
	9	A	52,415	52,504	52,593	52,682	52,771	52,860	52,950	53,039	53,128	53,217	53,306	53,395
		B	59,811	59,912	60,014	60,116	60,218	60,319	60,421	60,523	60,624	60,726	60,828	60,930
	10	A	53,484	53,574	53,663	53,752	53,841	53,930	54,019	54,108	54,198	54,287	54,376	54,465
		B	61,031	61,133	61,235	61,336	61,438	61,540	61,642	61,743	61,845	61,947	62,048	62,150
	11	A	54,554	54,643	54,732	54,821	54,911	55,000	55,089	55,178	55,267	55,356	55,445	55,535
		B	62,252	62,354	62,455	62,557	62,659	62,760	62,862	62,964	63,066	63,167	63,269	63,371
	12	A	55,624	55,713	55,802	55,891	55,980	56,069	56,159	56,248	56,337	56,426	56,515	56,604
		B	63,473	63,574	63,676	63,778	63,879	63,981	64,083	64,185	64,286	64,388	64,490	64,591
	13	A	56,693	56,783	56,872	56,961	57,050	57,139	57,228	57,317	57,407	57,496	57,585	57,674
		B	64,693	64,795	64,897	64,998	65,100	65,202	65,303	65,405	65,507	65,609	65,710	65,812
	14	A	57,763	57,852	57,941	58,031	58,120	58,209	58,298	58,387	58,476	58,565	58,655	58,744
		B	65,914	66,015	66,117	66,219	66,321	66,422	66,524	66,626	66,728	66,829	66,931	67,033
	15	A	58,833	58,922	59,011	59,100	59,189	59,279	59,368	59,457	59,546	59,635	59,724	59,813
		B	67,134	67,236	67,338	67,440	67,541	67,643	67,745	67,846	67,948	68,050	68,152	68,253
	16	A	59,903	59,992	60,081	60,170	60,259	60,348	60,437	60,526	60,616	60,705	60,794	60,883
		B	68,355	68,457	68,558	68,660	68,762	68,864	68,965	69,067	69,169	69,270	69,372	69,474
	17	A	60,972	61,061	61,150	61,240	61,329	61,418	61,507	61,596	61,685	61,774	61,864	61,953
		B	69,576	69,677	69,779	69,881	69,983	70,084	70,186	70,288	70,389	70,491	70,593	70,695
	18	A	62,042											
		B	70,796											

Computation Formula: Weight = 1.5 X 700 (L + 40)
(L = Distance between the center of the front axle and the center of the rear axle of a given group.)

Legend:
Line A: Four tires per axle or two 14-inch wide tires. Value is the formula weight plus 1.875%. Line B: Eight tires per axle or four 14-inch wide tires. Value is the formula weight plus 16.25%.

Table 3.03. Maximum Permitted Weight Computations: Axle Width - 8 Feet 6 Inches

Overweight Axle Group Chart

Distance between the center of the front axle and the center of the rear axle of a given group.

			Inches											
			0	1	2	3	4	5	6	7	8	9	10	11
Feet	3	A	29,050	29,050	29,050	29,050	29,050	29,050	47,388	47,479	47,569	47,660	47,751	47,842
		B	32,900	32,900	32,900	32,900	32,900	32,900	53,668	53,771	53,874	53,977	54,079	54,182
	4	A	47,933	48,023	48,114	48,205	48,296	48,386	48,477	48,568	48,659	48,750	48,840	48,931
		B	54,285	54,388	54,491	54,593	54,696	54,799	54,902	55,005	55,108	55,210	55,313	55,416
	5	A	49,022	49,113	49,203	49,294	49,385	49,476	49,567	49,657	49,748	49,839	49,930	50,020
		B	55,519	55,622	55,724	55,827	55,930	56,033	56,136	56,238	56,341	56,444	56,547	56,650
	6	A	50,111	50,202	50,293	50,384	50,474	50,565	50,656	50,747	50,838	50,928	51,019	51,110
		B	56,753	56,855	56,958	57,061	57,164	57,267	57,369	57,472	57,575	57,678	57,781	57,883
	7	A	51,201	51,291	51,382	51,473	51,564	51,655	51,745	51,836	51,927	52,018	52,108	52,199
		B	57,986	58,089	58,192	58,295	58,398	58,500	58,603	58,706	58,809	58,912	59,014	59,117
	8	A	52,290	52,381	52,472	52,562	52,653	52,744	52,835	52,925	53,016	53,107	53,198	53,289
		B	59,220	59,323	59,426	59,528	59,631	59,734	59,837	59,940	60,043	60,145	60,248	60,351
	9	A	53,379	53,470	53,561	53,652	53,743	53,833	53,924	54,015	54,106	54,196	54,287	54,378
		B	60,454	60,557	60,659	60,762	60,865	60,968	61,071	61,173	61,276	61,379	61,482	61,585
	10	A	54,469	54,560	54,650	54,741	54,832	54,923	55,013	55,104	55,195	55,286	55,377	55,467
		B	61,688	61,790	61,893	61,996	62,099	62,202	62,304	62,407	62,510	62,613	62,716	62,818
	11	A	55,558	55,649	55,740	55,830	55,921	56,012	56,103	56,194	56,284	56,375	56,466	56,557
		B	62,921	63,024	63,127	63,230	63,333	63,435	63,538	63,641	63,744	63,847	63,949	64,052
	12	A	56,648	56,738	56,829	56,920	57,011	57,101	57,192	57,283	57,374	57,465	57,555	57,646
		B	64,155	64,258	64,361	64,463	64,566	64,669	64,772	64,875	64,978	65,080	65,183	65,286
	13	A	57,737	57,828	57,918	58,009	58,100	58,191	58,282	58,372	58,463	58,554	58,645	58,735
		B	65,389	65,492	65,594	65,697	65,800	65,903	66,006	66,108	66,211	66,314	66,417	66,520
	14	A	58,826	58,917	59,008	59,099	59,189	59,280	59,371	59,462	59,553	59,643	59,734	59,825
		B	66,623	66,725	66,828	66,931	67,034	67,137	67,239	67,342	67,445	67,548	67,651	67,753
	15	A	59,916	60,006	60,097	60,188	60,279	60,370	60,460	60,551	60,642	60,733	60,823	60,914
		B	67,856	67,959	68,062	68,165	68,268	68,370	68,473	68,576	68,679	68,782	68,884	68,987
	16	A	61,005	61,096	61,187	61,277	61,368	61,459	61,550	61,640	61,731	61,822	61,913	62,004
		B	69,090	69,193	69,296	69,398	69,501	69,604	69,707	69,810	69,913	70,015	70,118	70,221
	17	A	62,094	62,185	62,276	62,367	62,458	62,548	62,639	62,730	62,821	62,911	63,002	63,093
		B	70,324	70,427	70,529	70,632	70,735	70,838	70,941	71,043	71,146	71,249	71,352	71,455
	18	A	63,184											
		B	71,558											

Computation Formula: Weight = 1.5 X 700 (L + 40)
(L = Distance between the center of the front axle and the center of the rear axle of a given group.)

Legend:
Line A: Four tires per axle or two 14-inch wide tires. Value is the formula weight plus 3.75%. Line B: Eight tires per axle or four 14-inch wide tires. Value is the formula weight plus 17.5%.

Table 3.04. Maximum Permitted Weight Computations: Axle Width - 8 Feet 9 Inches
Overweight Axle Group Chart
Distance between the center of the front axle and the center of the rear axle of a given group.

			Inches											
			0	1	2	3	4	5	6	7	8	9	10	11
Feet	3	A	29,575	29,575	29,575	29,575	29,575	29,575	48,244	48,337	48,429	48,521	48,614	48,706
		B	33,250	33,250	33,250	33,250	33,250	33,250	54,239	54,343	54,447	54,551	54,655	54,759
	4	A	48,799	48,891	48,984	49,076	49,168	49,261	49,353	49,446	49,538	49,631	49,723	49,815
		B	54,863	54,966	55,070	55,174	55,278	55,382	55,486	55,590	55,694	55,798	55,902	56,005
	5	A	49,908	50,000	50,093	50,185	50,278	50,370	50,462	50,555	50,647	50,740	50,832	50,924
		B	56,109	56,213	56,317	56,421	56,525	56,629	56,733	56,837	56,941	57,045	57,148	57,252
	6	A	51,017	51,109	51,202	51,294	51,387	51,479	51,571	51,664	51,756	51,849	51,941	52,034
		B	57,356	57,460	57,564	57,668	57,772	57,876	57,980	58,084	58,188	58,291	58,395	58,499
	7	A	52,126	52,218	52,311	52,403	52,496	52,588	52,680	52,773	52,865	52,958	53,050	53,143
		B	58,603	58,707	58,811	58,915	59,019	59,123	59,227	59,330	59,434	59,538	59,642	59,746
	8	A	53,235	53,327	53,420	53,512	53,605	53,697	53,790	53,882	53,974	54,067	54,159	54,252
		B	59,850	59,954	60,058	60,162	60,266	60,370	60,473	60,577	60,681	60,785	60,889	60,993
	9	A	54,344	54,436	54,529	54,621	54,714	54,806	54,899	54,991	55,083	55,176	55,268	55,361
		B	61,097	61,201	61,305	61,409	61,513	61,616	61,720	61,824	61,928	62,032	62,136	62,240
	10	A	55,453	55,546	55,638	55,730	55,823	55,915	56,008	56,100	56,193	56,285	56,377	56,470
		B	62,344	62,448	62,552	62,655	62,759	62,863	62,967	63,071	63,175	63,279	63,383	63,487
	11	A	56,562	56,655	56,747	56,839	56,932	57,024	57,117	57,209	57,302	57,394	57,486	57,579
		B	63,591	63,695	63,798	63,902	64,006	64,110	64,214	64,318	64,422	64,526	64,630	64,734
	12	A	57,671	57,764	57,856	57,949	58,041	58,133	58,226	58,318	58,411	58,503	58,595	58,688
		B	64,838	64,941	65,045	65,149	65,253	65,357	65,461	65,565	65,669	65,773	65,877	65,980
	13	A	58,780	58,873	58,965	59,058	59,150	59,242	59,335	59,427	59,520	59,612	59,705	59,797
		B	66,084	66,188	66,292	66,396	66,500	66,604	66,708	66,812	66,916	67,020	67,123	67,227
	14	A	59,889	59,982	60,074	60,167	60,259	60,351	60,444	60,536	60,629	60,721	60,814	60,906
		B	67,331	67,435	67,539	67,643	67,747	67,851	67,955	68,059	68,163	68,266	68,370	68,474
	15	A	60,998	61,091	61,183	61,276	61,368	61,461	61,553	61,645	61,738	61,830	61,923	62,015
		B	68,578	68,682	68,786	68,890	68,994	69,098	69,202	69,305	69,409	69,513	69,617	69,721
	16	A	62,108	62,200	62,292	62,385	62,477	62,570	62,662	62,754	62,847	62,939	63,032	63,124
		B	69,825	69,929	70,033	70,137	70,241	70,345	70,448	70,552	70,656	70,760	70,864	70,968
	17	A	63,217	63,309	63,401	63,494	63,586	63,679	63,771	63,864	63,956	64,048	64,141	64,233
		B	71,072	71,176	71,280	71,384	71,488	71,591	71,695	71,799	71,903	72,007	72,111	72,215
	18	A	64,326											
		B	72,319											

Computation Formula: Weight = 1.5 X 700 (L + 40)
(L = Distance between the center of the front axle and the center of the rear axle of a given group.)

Legend:
Line A: Four tires per axle or two 14-inch wide tires. Value is the formula weight plus 5.625%. Line B: Eight tires per axle or four 14-inch wide tires. Value is the formula weight plus 18.75%.

Table 3.05. Maximum Permitted Weight Computations: Axle Width - 9 Feet
Overweight Axle Group Chart
Distance between the center of the front axle and the center of the rear axle of a given group.

			Inches											
			0	1	2	3	4	5	6	7	8	9	10	11
Feet	3	A	30,100	30,100	30,100	30,100	30,100	30,100	49,101	49,195	49,289	49,383	49,477	49,571
		B	33,600	33,600	33,600	33,600	33,600	33,600	54,810	54,915	55,020	55,125	55,230	55,335
	4	A	49,665	49,759	49,853	49,947	50,041	50,135	50,229	50,323	50,418	50,512	50,606	50,700
		B	55,440	55,545	55,650	55,755	55,860	55,965	56,070	56,175	56,280	56,385	56,490	56,595
	5	A	50,794	50,888	50,982	51,076	51,170	51,264	51,358	51,452	51,546	51,640	51,734	51,828
		B	56,700	56,805	56,910	57,015	57,120	57,225	57,330	57,435	57,540	57,645	57,750	57,855
	6	A	51,923	52,017	52,111	52,205	52,299	52,393	52,487	52,581	52,675	52,769	52,863	52,957
		B	57,960	58,065	58,170	58,275	58,380	58,485	58,590	58,695	58,800	58,905	59,010	59,115
	7	A	53,051	53,145	53,239	53,333	53,428	53,522	53,616	53,710	53,804	53,898	53,992	54,086
		B	59,220	59,325	59,430	59,535	59,640	59,745	59,850	59,955	60,060	60,165	60,270	60,375
	8	A	54,180	54,274	54,368	54,462	54,556	54,650	54,744	54,838	54,933	55,027	55,121	55,215
		B	60,480	60,585	60,690	60,795	60,900	61,005	61,110	61,215	61,320	61,425	61,530	61,635
	9	A	55,309	55,403	55,497	55,591	55,685	55,779	55,873	55,967	56,061	56,155	56,249	56,343
		B	61,740	61,845	61,950	62,055	62,160	62,265	62,370	62,475	62,580	62,685	62,790	62,895
	10	A	56,438	56,532	56,626	56,720	56,814	56,908	57,002	57,096	57,190	57,284	57,378	57,472
		B	63,000	63,105	63,210	63,315	63,420	63,525	63,630	63,735	63,840	63,945	64,050	64,155
	11	A	57,566	57,660	57,754	57,848	57,943	58,037	58,131	58,225	58,319	58,413	58,507	58,601
		B	64,260	64,365	64,470	64,575	64,680	64,785	64,890	64,995	65,100	65,205	65,310	65,415
	12	A	58,695	58,789	58,883	58,977	59,071	59,165	59,259	59,353	59,448	59,542	59,636	59,730
		B	65,520	65,625	65,730	65,835	65,940	66,045	66,150	66,255	66,360	66,465	66,570	66,675
	13	A	59,824	59,918	60,012	60,106	60,200	60,294	60,388	60,482	60,576	60,670	60,764	60,858
		B	66,780	66,885	66,990	67,095	67,200	67,305	67,410	67,515	67,620	67,725	67,830	67,935
	14	A	60,953	61,047	61,141	61,235	61,329	61,423	61,517	61,611	61,705	61,799	61,893	61,987
		B	68,040	68,145	68,250	68,355	68,460	68,565	68,670	68,775	68,880	68,985	69,090	69,195
	15	A	62,081	62,175	62,269	62,363	62,458	62,552	62,646	62,740	62,834	62,928	63,022	63,116
		B	69,300	69,405	69,510	69,615	69,720	69,825	69,930	70,035	70,140	70,245	70,350	70,455
	16	A	63,210	63,304	63,398	63,492	63,586	63,680	63,774	63,868	63,963	64,057	64,151	64,245
		B	70,560	70,665	70,770	70,875	70,980	71,085	71,190	71,295	71,400	71,505	71,610	71,715
	17	A	64,339	64,433	64,527	64,621	64,715	64,809	64,903	64,997	65,091	65,185	65,279	65,373
		B	71,820	71,925	72,030	72,135	72,240	72,345	72,450	72,555	72,660	72,765	72,870	72,975
	18	A	65,468											
		B	73,080											

Computation Formula: Weight = 1.5 X 700 (L + 40)
(L = Distance between the center of the front axle and the center of the rear axle of a given group.)

Legend:
Line A: Four tires per axle or two 14-inch wide tires. Value is the formula weight plus 7.5%. Line B: Eight tires per axle or four 14-inch wide tires. Value is the formula weight plus 20%.

Table 3.06. Maximum Permitted Weight Computations: Axle Width - 9 Feet 3 Inches
Overweight Axle Group Chart
Distance between the center of the front axle and the center of the rear axle of a given group.

			Inches											
			0	1	2	3	4	5	6	7	8	9	10	11
Feet	3	A	30,625	30,625	30,625	30,625	30,625	30,625	49,957	50,053	50,148	50,244	50,340	50,436
		B	33,950	33,950	33,950	33,950	33,950	33,950	55,381	55,487	55,593	55,699	55,805	55,911
	4	A	50,531	50,627	50,723	50,818	50,914	51,010	51,105	51,201	51,297	51,393	51,488	51,584
		B	56,018	56,124	56,230	56,336	56,442	56,548	56,654	56,760	56,866	56,972	57,078	57,185
	5	A	51,680	51,775	51,871	51,967	52,063	52,158	52,254	52,350	52,445	52,541	52,637	52,732
		B	57,291	57,397	57,503	57,609	57,715	57,821	57,927	58,033	58,139	58,245	58,352	58,458
	6	A	52,828	52,924	53,020	53,115	53,211	53,307	53,402	53,498	53,594	53,689	53,785	53,881
		B	58,564	58,670	58,776	58,882	58,988	59,094	59,200	59,306	59,413	59,519	59,625	59,731
	7	A	53,977	54,072	54,168	54,264	54,359	54,455	54,551	54,646	54,742	54,838	54,934	55,029
		B	59,837	59,943	60,049	60,155	60,261	60,367	60,473	60,580	60,686	60,792	60,898	61,004
	8	A	55,125	55,221	55,316	55,412	55,508	55,604	55,699	55,795	55,891	55,986	56,082	56,178
		B	61,110	61,216	61,322	61,428	61,534	61,640	61,747	61,853	61,959	62,065	62,171	62,277
	9	A	56,273	56,369	56,465	56,561	56,656	56,752	56,848	56,943	57,039	57,135	57,230	57,326
		B	62,383	62,489	62,595	62,701	62,808	62,914	63,020	63,126	63,232	63,338	63,444	63,550
	10	A	57,422	57,518	57,613	57,709	57,805	57,900	57,996	58,092	58,188	58,283	58,379	58,475
		B	63,656	63,762	63,868	63,975	64,081	64,187	64,293	64,399	64,505	64,611	64,717	64,823
	11	A	58,570	58,666	58,762	58,857	58,953	59,049	59,145	59,240	59,336	59,432	59,527	59,623
		B	64,929	65,035	65,142	65,248	65,354	65,460	65,566	65,672	65,778	65,884	65,990	66,096
	12	A	59,719	59,814	59,910	60,006	60,102	60,197	60,293	60,389	60,484	60,580	60,676	60,771
		B	66,203	66,309	66,415	66,521	66,627	66,733	66,839	66,945	67,051	67,157	67,263	67,370
	13	A	60,867	60,963	61,059	61,154	61,250	61,346	61,441	61,537	61,633	61,729	61,824	61,920
		B	67,476	67,582	67,688	67,794	67,900	68,006	68,112	68,218	68,324	68,430	68,537	68,643
	14	A	62,016	62,111	62,207	62,303	62,398	62,494	62,590	62,686	62,781	62,877	62,973	63,068
		B	68,749	68,855	68,961	69,067	69,173	69,279	69,385	69,491	69,598	69,704	69,810	69,916
	15	A	63,164	63,260	63,355	63,451	63,547	63,643	63,738	63,834	63,930	64,025	64,121	64,217
		B	70,022	70,128	70,234	70,340	70,446	70,552	70,658	70,765	70,871	70,977	71,083	71,189
	16	A	64,313	64,408	64,504	64,600	64,695	64,791	64,887	64,982	65,078	65,174	65,270	65,365
		B	71,295	71,401	71,507	71,613	71,719	71,825	71,932	72,038	72,144	72,250	72,356	72,462
	17	A	65,461	65,557	65,652	65,748	65,844	65,939	66,035	66,131	66,227	66,322	66,418	66,514
		B	72,568	72,674	72,780	72,886	72,993	73,099	73,205	73,311	73,417	73,523	73,629	73,735
	18	A	66,609											
		B	73,841											

Computation Formula: Weight = 1.5 X 700 (L + 40)
(L = Distance between the center of the front axle and the center of the rear axle of a given group.)

Legend:
Line A: Four tires per axle or two 14-inch wide tires. Value is the formula weight plus 9.375%. Line B: Eight tires per axle or four 14-inch wide tires. Value is the formula weight plus 21.25%.

Table 3.07. Maximum Permitted Weight Computations: Axle Width - 9 Feet 6 Inches
Overweight Axle Group Chart

Distance between the center of the front axle and the center of the rear axle of a given group.

			Inches											
			0	1	2	3	4	5	6	7	8	9	10	11
Feet	3	A	31,150	31,150	31,150	31,150	31,150	31,150	50,813	50,911	51,008	51,105	51,203	51,300
		B	34,300	34,000	34,300	34,300	34,300	34,300	55,952	56,059	56,166	56,273	56,381	56,488
	4	A	51,398	51,495	51,592	51,690	51,787	51,884	51,982	52,079	52,176	52,274	52,371	52,468
		B	56,595	56,702	56,809	56,917	57,024	57,131	57,238	57,345	57,453	57,560	57,667	57,774
	5	A	52,566	52,663	52,760	52,858	52,955	53,052	53,150	53,247	53,344	53,442	53,539	53,636
		B	57,881	57,988	58,096	58,203	58,310	58,417	58,524	58,632	58,739	58,846	58,953	59,060
	6	A	53,734	53,831	53,928	54,026	54,123	54,220	54,318	54,415	54,513	54,610	54,707	54,805
		B	59,168	59,275	59,382	59,489	59,596	59,703	59,811	59,918	60,025	60,132	60,239	60,347
	7	A	54,902	54,999	55,097	55,194	55,291	55,389	55,486	55,583	55,681	55,778	55,875	55,973
		B	60,454	60,561	60,668	60,775	60,883	60,990	61,097	61,204	61,311	61,418	61,526	61,633
	8	A	56,070	56,167	56,265	56,362	56,459	56,557	56,654	56,751	56,849	56,946	57,043	57,141
		B	61,740	61,847	61,954	62,062	62,169	62,276	62,383	62,490	62,598	62,705	62,812	62,919
	9	A	57,238	57,335	57,433	57,530	57,628	57,725	57,822	57,920	58,017	58,114	58,212	58,309
		B	63,026	63,133	63,241	63,348	63,455	63,562	63,669	63,777	63,884	63,991	64,098	64,205
	10	A	58,406	58,504	58,601	58,698	58,796	58,893	58,990	59,088	59,185	59,282	59,380	59,477
		B	64,313	64,420	64,527	64,634	64,741	64,848	64,956	65,063	65,170	65,277	65,384	65,492
	11	A	59,574	59,672	59,769	59,866	59,964	60,061	60,158	60,256	60,353	60,450	60,548	60,645
		B	65,599	65,706	65,813	65,920	66,028	66,135	66,242	66,349	66,456	66,563	66,671	66,778
	12	A	60,743	60,840	60,937	61,035	61,132	61,229	61,327	61,424	61,521	61,619	61,716	61,813
		B	66,885	66,992	67,099	67,207	67,314	67,421	67,528	67,635	67,743	67,850	67,957	68,064
	13	A	61,911	62,008	62,105	62,203	62,300	62,397	62,495	62,592	62,689	62,787	62,884	62,981
		B	68,171	68,278	68,386	68,493	68,600	68,707	68,814	68,922	69,029	69,136	69,243	69,350
	14	A	63,079	63,176	63,273	63,371	63,468	63,565	63,663	63,760	63,858	63,955	64,052	64,150
		B	69,458	69,565	69,672	69,779	69,886	69,993	70,101	70,208	70,315	70,422	70,529	70,637
	15	A	64,247	64,344	64,442	64,539	64,636	64,734	64,831	64,928	65,026	65,123	65,220	65,318
		B	70,744	70,851	70,958	71,065	71,173	71,280	71,387	71,494	71,601	71,708	71,816	71,923
	16	A	65,415	65,512	65,610	65,707	65,804	65,902	65,999	66,096	66,194	66,291	66,388	66,486
		B	72,030	72,137	72,244	72,352	72,459	72,566	72,673	72,780	72,888	72,995	73,102	73,209
	17	A	66,583	66,680	66,778	66,875	66,973	67,070	67,167	67,265	67,362	67,459	67,557	67,654
		B	73,316	73,423	73,531	73,638	73,745	73,852	73,959	74,067	74,174	74,281	74,388	74,495
	18	A	67,751											
		B	74,603											

Computation Formula: Weight = 1.5 X 700 (L + 40)
(L = Distance between the center of the front axle and the center of the rear axle of a given group.)

Legend:
Line A: Four tires per axle or two 14-inch wide tires. Value is the formula weight plus 11.25%. Line B: Eight tires per axle or four 14-inch wide tires. Value is the formula weight plus 22.5%.

Table 3.08. Maximum Permitted Weight Computations: Axle Width - 9 Feet 9 Inches
Overweight Axle Group Chart
Distance between the center of the front axle and the center of the rear axle of a given group.

			Inches											
			0	1	2	3	4	5	6	7	8	9	10	11
Feet	3	A	31,675	31,675	31,675	31,675	31,675	31,675	51,670	51,769	51,868	51,967	52,066	52,165
		B	34,650	34,650	34,650	34,650	34,650	34,650	56,523	56,631	56,739	56,848	56,956	57,064
	4	A	52,264	52,363	52,462	52,561	52,660	52,759	52,858	52,957	53,056	53,155	53,254	53,353
		B	57,173	57,281	57,389	57,497	57,606	57,714	57,822	57,930	58,039	58,147	58,255	58,364
	5	A	53,452	53,551	53,650	53,749	53,848	53,946	54,045	54,144	54,243	54,342	54,441	54,540
		B	58,472	58,580	58,688	58,797	58,905	59,013	59,122	59,230	59,338	59,446	59,555	59,663
	6	A	54,639	54,738	54,837	54,936	55,035	55,134	55,233	55,332	55,431	55,530	55,629	55,728
		B	59,771	59,880	59,988	60,096	60,204	60,313	60,421	60,529	60,638	60,746	60,854	60,962
	7	A	55,827	55,926	56,025	56,124	56,223	56,322	56,421	56,520	56,619	56,718	56,817	56,916
		B	61,071	61,179	61,287	61,395	61,504	61,612	61,720	61,829	61,937	62,045	62,153	62,262
	8	A	57,015	57,114	57,213	57,312	57,411	57,510	57,609	57,708	57,807	57,906	58,005	58,104
		B	62,370	62,478	62,587	62,695	62,803	62,911	63,020	63,128	63,236	63,345	63,453	63,561
	9	A	58,203	58,302	58,401	58,500	58,599	58,698	58,797	58,896	58,995	59,094	59,193	59,292
		B	63,669	63,778	63,886	63,994	64,103	64,211	64,319	64,427	64,536	64,644	64,752	64,860
	10	A	59,391	59,490	59,589	59,688	59,787	59,886	59,985	60,084	60,183	60,281	60,380	60,479
		B	64,969	65,077	65,185	65,294	65,402	65,510	65,618	65,727	65,835	65,943	66,052	66,160
	11	A	60,578	60,677	60,776	60,875	60,974	61,073	61,172	61,271	61,370	61,469	61,568	61,667
		B	66,268	66,376	66,485	66,593	66,701	66,810	66,918	67,026	67,134	67,243	67,351	67,459
	12	A	61,766	61,865	61,964	62,063	62,162	62,261	62,360	62,459	62,558	62,657	62,756	62,855
		B	67,568	67,676	67,784	67,892	68,001	68,109	68,217	68,325	68,434	68,542	68,650	68,759
	13	A	62,954	63,053	63,152	63,251	63,350	63,449	63,548	63,647	63,746	63,845	63,944	64,043
		B	68,867	68,975	69,083	69,192	69,300	69,408	69,517	69,625	69,733	69,841	69,950	70,058
	14	A	64,142	64,241	64,340	64,439	64,538	64,637	64,736	64,835	64,934	65,033	65,132	65,231
		B	70,166	70,275	70,383	70,491	70,599	70,708	70,816	70,924	71,033	71,141	71,249	71,357
	15	A	65,330	65,429	65,528	65,627	65,726	65,825	65,924	66,023	66,122	66,221	66,320	66,419
		B	71,466	71,574	71,682	71,790	71,899	72,007	72,115	72,224	72,332	72,440	72,548	72,657
	16	A	66,518	66,616	66,715	66,814	66,913	67,012	67,111	67,210	67,309	67,408	67,507	67,606
		B	72,765	72,873	72,982	73,090	73,198	73,306	73,415	73,523	73,631	73,740	73,848	73,956
	17	A	67,705	67,804	67,903	68,002	68,101	68,200	68,299	68,398	68,497	68,596	68,695	68,794
		B	74,064	74,173	74,281	74,389	74,498	74,606	74,714	74,822	74,931	75,039	75,147	75,255
	18	A	68,893											
		B	75,364											

Computation Formula: Weight = 1.5 X 700 (L + 40)
(L = Distance between the center of the front axle and the center of the rear axle of a given group.)

Legend:
Line A: Four tires per axle or two 14-inch wide tires. Value is the formula weight plus 13.125%. Line B: Eight tires per axle or four 14-inch wide tires. Value is the formula weight plus 23.75%.

Table 3.09. Maximum Permitted Weight Computations: Axle Width - 10 Feet
Overweight Axle Group Chart
Distance between the center of the front axle and the center of the rear axle of a given group.

			Inches											
			0	1	2	3	4	5	6	7	8	9	10	11
Feet	3	A	32,200	32,200	32,200	32,200	32,200	32,200	52,526	52,627	52,728	52,828	52,929	53,029
		B	35,000	35,000	35,000	35,000	35,000	35,000	57,094	57,203	57,313	57,422	57,531	57,641
	4	A	53,130	53,231	53,331	53,432	53,533	53,633	53,734	53,834	53,935	54,036	54,136	54,237
		B	57,750	57,859	57,969	58,078	58,188	58,297	58,406	58,516	58,625	58,734	58,844	58,953
	5	A	54,338	54,438	54,539	54,639	54,740	54,841	54,941	55,042	55,143	55,243	55,344	55,444
		B	59,063	59,172	59,281	59,391	59,500	59,609	59,719	59,828	59,938	60,047	60,156	60,266
	6	A	55,545	55,646	55,746	55,847	55,948	56,048	56,149	56,249	56,350	56,451	56,551	56,652
		B	60,375	60,484	60,594	60,703	60,813	60,922	61,031	61,141	61,250	61,359	61,469	61,578
	7	A	56,753	56,853	56,954	57,054	57,155	57,256	57,356	57,457	57,558	57,658	57,759	57,859
		B	61,688	61,797	61,906	62,016	62,125	62,234	62,344	62,453	62,563	62,672	62,781	62,891
	8	A	57,960	58,061	58,161	58,262	58,363	58,463	58,564	58,664	58,765	58,866	58,966	59,067
		B	63,000	63,109	63,219	63,328	63,438	63,547	63,656	63,766	63,875	63,984	64,094	64,203
	9	A	59,168	59,268	59,369	59,469	59,570	59,671	59,771	59,872	59,973	60,073	60,174	60,274
		B	64,313	64,422	64,531	64,641	64,750	64,859	64,969	65,078	65,188	65,297	65,406	65,516
	10	A	60,375	60,476	60,576	60,677	60,778	60,878	60,979	61,079	61,180	61,281	61,381	61,482
		B	65,625	65,734	65,844	65,953	66,063	66,172	66,281	66,391	66,500	66,609	66,719	66,828
	11	A	61,583	61,683	61,784	61,884	61,985	62,086	62,186	62,287	62,388	62,488	62,589	62,689
		B	66,938	67,047	67,156	67,266	67,375	67,484	67,594	67,703	67,813	67,922	68,031	68,141
	12	A	62,790	62,891	62,991	63,092	63,193	63,293	63,394	63,494	63,595	63,696	63,796	63,897
		B	68,250	68,359	68,469	68,578	68,688	68,797	68,906	69,016	69,125	69,234	69,344	69,453
	13	A	63,998	64,098	64,199	64,299	64,400	64,501	64,601	64,702	64,803	64,903	65,004	65,104
		B	69,563	69,672	69,781	69,891	70,000	70,109	70,219	70,328	70,438	70,547	70,656	70,766
	14	A	65,205	65,306	65,406	65,507	65,608	65,708	65,809	65,909	66,010	66,111	66,211	66,312
		B	70,875	70,984	71,094	71,203	71,313	71,422	71,531	71,641	71,750	71,859	71,969	72,078
	15	A	66,413	66,513	66,614	66,714	66,815	66,916	67,016	67,117	67,218	67,318	67,419	67,519
		B	72,188	72,297	72,406	72,516	72,625	72,734	72,844	72,953	73,063	73,172	73,281	73,391
	16	A	67,620	67,721	67,821	67,922	68,023	68,123	68,224	68,324	68,425	68,526	68,626	68,727
		B	73,500	73,609	73,719	73,828	73,938	74,047	74,156	74,266	74,375	74,484	74,594	74,703
	17	A	68,828	68,928	69,029	69,129	69,230	69,331	69,431	69,532	69,633	69,733	69,834	69,934
		B	74,813	74,922	75,031	75,141	75,250	75,359	75,469	75,578	75,688	75,797	75,906	76,016
	18	A	70,035											
		B	76,125											

Computation Formula: Weight = 1.5 X 700 (L + 40)
(L = Distance between the center of the front axle and the center of the rear axle of a given group.)

Legend:
Line A: Four tires per axle or two 14-inch wide tires. Value is the formula weight plus 15%.
Line B: Eight tires per axle or four 14-inch wide tires. Value is the formula weight plus 25%.

Illustration 3. Overweight Axle Groups

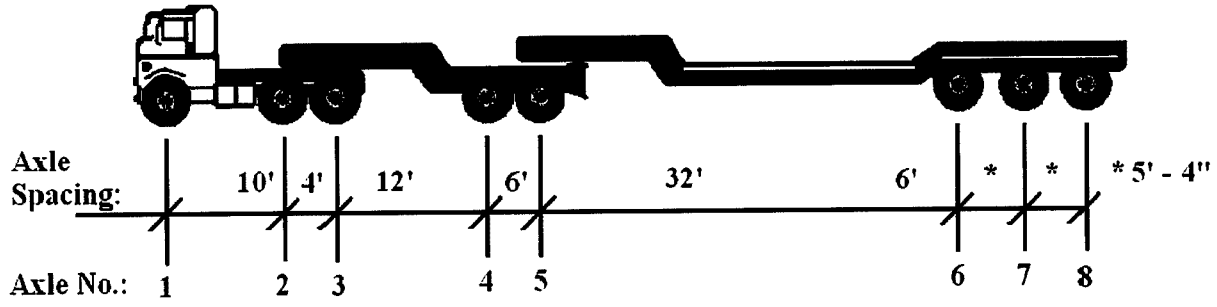

Axle Width:	**8' wide**	**10' wide**	**10' wide**
Tires per Axle:	**4 tires**	**8 tires**	**4 tires**

The axle group weights shown on the previous tables are maximum weights allowed on any combination of axles within the distance between the front and rear axle of a given group to a maximum of 18 feet. The values in Table 3.01 line "A" are an expansion of the formula W = 1.5 x 700 (L + 40), where L is the distance between the centers of the front and rear axles of a group. The values in line "B" and in the remaining tables are computed by applying the percentages provided in the Table footnotes and are intended to increase the allowable weights based on wider axles and increased number of tires. Measured axle widths shall be rounded down to the nearest 3" increment when determining the appropriate table to use.

(Axle 1) limited to 28,000 lbs. for single alone
(Axle 2 + 3); L = 4'; W = 46,200 lbs. for tandem alone
(Axle 1) + (Axle 2 + 3); L = 14'; W = 56,700 lbs. for the group
(Axle 4 + 5); L = 6'; W = 60,375 lbs. (25% increase for 10' wide - 8 tires)
(Axle 2 + 3 + 4); L = 16'; W = (2/3 x 58,800) + (1/3 x 73,500) = 63,700 lbs.
(Axle 3 + 4 + 5); L = 18'; W = (1/3 x 60,900) + (2/3 x 76,125) = 71,050 lbs.
(Axle 3 + 4); L = 12'; W = (1/2 x 54,600) + (1/2 x 68,250) = 61,425 lbs.
(Axle 6 + 7 +8); L = 10' 8"; W = 61,180 (15% increase for 10' wide - 4 tires)

Note: The Department shall review each possible axle group that can exist within an 18-foot distance. Axle group configurations of different widths or numbers of tires shall be prorated within the total group load in determining any allowable increase over the basic formula weight.

10.36.460. Highway-specific restrictions, requirements, conditions, and allowances.

A. The Department may temporarily prohibit operation of an oversize or overweight special permitted vehicle, or impose additional weight restrictions, requirements, conditions, or allowances, if safe transport on a highway under the Department's jurisdiction is unavoidably affected by a temporary construction or maintenance project, incident, or emergency situation as indicated on the Department's web site at http://webcms.pima.gov/cms/One.aspx?portalId=169&pageId=136105.

B. The Department shall post to its web site at http://webcms.pima.gov/cms/One.aspx?portalId=169&pageId=136105 all updates to any temporary or permanent highway restrictions, requirements, conditions, or allowances affecting a highway or structure listed under Table 4 as appropriate for safe transport of an oversize or overweight vehicle

or vehicle and load.

C. A permittee and driver shall check the Department's web site at http://webcms.pima.gov/cms/One.aspx?portalId=169&pageId=136105 daily for updates to any temporary or permanent highway restrictions, requirements, conditions, or allowances affecting safe transport of an oversize or overweight vehicle or vehicle and load on a highway or structure listed under Table 4.

D. A permittee or driver of an oversize or overweight vehicle or load shall not cross a structure listed under Table 4 unless operating in full compliance with all indicated permanent highway restrictions, requirements, conditions and allowances, including any additional instructions indicated on the special permit issued by the Department.

E. A permittee and driver shall additionally check daily for up-to-date information on traffic conditions, road closures, and restrictions by:

1. Accessing the Department's website for road closure updates at http://webcms.pima.gov/cms/One.aspx?portalId=169&pageId=136105 ; or

F. The information contained in Table 4 reflects structure restrictions, requirements, conditions, and allowances applicable on the effective date of this Section. Real-time updates published as an addendum to Table 4 are posted by the Department to its website at http://webcms.pima.gov/cms/One.aspx?portalId=169&pageId=67525. This information is critical for ensuring safe transport of an oversize or overweight vehicle or load and is subject to change as provided under this Section.

Table 4. Highway Structure Restrictions, Requirements, Conditions, and Allowances

Street Name	No.	Name	Restriction location	Clear Roadway Width[1]	Weight (lbs.)[2]
Colossal Cave Road	7575	Pantano Wash Bridge	2.2 miles N. of I-10 (Lat. 32 Deg 02 Min 59.47 Sec N., Long. 110 Deg 41 Min 51.26 Sec W.)	44'-0"±	Permitted vehicles with a gross weight less than 150,000 - no restrictions. Permitted vehicles with a gross weight of 150,001 to 250,000 - drivers shall: Cross bridge in center of travel lanes at a constant speed of no more than 10 mph while on bridge. Permitted vehicles with a gross weight of over 250,000 require a special structural analysis and approval from Pima County[3]
Telera Street	8258	Ajo Wash Bridge	South of Rocalla Ave. (Lat. 32 Deg 22 Min 24.68 Sec N., Long. 112 Deg 51 Min 57.71 Sec W.)	26'-6"±	10,000 maximum gross
Silverbell Road	8259	Blanco Wash Bridge	0.28 miles W. of Aguirre Rd. (Lat. 32 Deg 27 Min 58.81 Sec N., Long. 111 Deg 20 Min 19.65 Sec W.)	11'-4"±	6,000 maximum gross
Trico Road	8262	Santa Cruz River Bridge	1.4 miles N. of Trico-Marana (Lat. 32 Deg 28 Min 16.68 Sec N., Long. 111 Deg 18 Min 15.23 Sec W.)	24'-8"±	30,000 maximum gross
Dodge Boulevard	8273	Rillito River Bridge	0.8 miles N. of Kleindale Dr. (Lat. 32 Deg 16 Min 16.00 Sec N. Long. 110 Deg 54 Min 51.44 Sec W.)	28'-0"±	40,000 maximum gross
Soldier Trail	8279	Small Wash Bridge	Catalina Highway - Mt. Lemmon Rd. (Lat. 33 Deg 18 Min 12.56 Sec N., Long. 110 deg 44 Min 41.17 Sec W.)	22'-7"±	46,000 maximum gross

Table 4. Highway Structure Restrictions, Requirements, Conditions, and Allowances (cont'd)

Street Name	No.	Name	Restriction location	Clear Roadway Width[1]	Weight (lbs.)[2]
Marsh Station Road	8293	Pantano Wash & UPRR Bridge	6.1 miles n. of Benson Highway (Lat. 32 Deg 01 Min 11.03 Sec N., Long. 110 Deg 38 Min 45.60 Sec W.)	20'-0"±	40,000 maximum gross
Marsh Station Road	8294	Medium Wash RCB	4.7 miles N. of I-10 Exit 289 (Lat. 32 Deg 01 Min 23.27 Sec N., Long. 110 Deg 37 Min 19.47 Sec W.)	25'-5"±	40,000 maximum gross
Marsh Station Road	8299	La Cienega Wash Bridge	0.4 miles N. of Benson Highway (Lat. 31 Deg 59 Min 23.23 Sec N., Long. 110 Deg 33 Min 55.99 Sec W.)	24'-6"±	40,000 maximum gross
Greaterville Road	8300	Medium Wash Bridge	0.3 miles W. of Sonoita Highway (Lat. 31 Deg 46 Min 54.26 Sec N., Long. 110 Deg 41 Min 46.19 Sec W.)	20'-0"±	20,000 maximum gross
Madera Canyon Road	8301	Medium Wash Bridge	0.4 miles S. of Whitehouse Canyon Rd. (Lat. 31 Deg 47 Min 16.46 Sec N., Long. 110 Deg 53 Min 03.95 Sec W.)	14'-2"±	78,000 maximum gross
Mission Road	8318	Mission Road Overpass	1.5 miles N. of Pima Mine Rd. (Lat. 32 Deg 01 Min 05.58 Sec N, Long. 111 Deg 04 Min 28.67 Sec W.)	41'-1"±	30,000 maximum gross
Soledad Avenue	8460	Drainage Channel Bridge	300 feet N. of Orangewood (Lat. 32 Deg 20 Min 54.62 Sec N, Long. 111 Deg 03 Min 11.69 Sec W.)	40'-0"±	68,000 maximum gross

Table 4. Highway Structure Restrictions, Requirements, Conditions, and Allowances (cont'd)

Street Name	No.	Name	Restriction location	Clear Roadway Width[1]	Weight (lbs.)[2]
Mile Wide Road	8474	Brawley Wash Bridge	1.5 miles W. of Sandario Rd. (Lat. 32 Deg 14 Min 53.26 Sec N., Long. 111 Deg 14 Min 38.85 Sec W.)	16'-4"±	10,000 maximum gross
Mile Wide Road	8475	Jones Wash Bridge	3 miles W. of Sandario Rd. (Lat. 32 Deg 14 Min 53.14 Sec N., Long. 111 Deg 16 Min 12.83 Sec W.)	16'-4"±	10,000 maximum gross
Kolb Road	8747	SP Railroad Bridge	Kolb Road and UPRR (Lat. 32 Deg 07 Min 12.25 Sec N., Long. 110 Deg 50 Min 27.72 Sec)	28'-0"± NB 28'-0"± SB	Permitted vehicles with a gross weight less than 150,000 - no restrictions. Permitted vehicles with a gross weight of 150,001 to 250,000 - drivers shall: Cross at a constant speed of no more than 10 mph while on bridge. Permitted vehicles with a gross weight of over 250,000 require a special structural analysis and approval from Pima County[3]
Valencia Road	8756	UPRR Bridge	Valencia Road and UPRR (Lat. 32 Deg 08 Min 26.98 Sec N., Long. 110 Deg 52 Min 40.03 Sec W.)	40'-0"± EB 40'-0"± WB	Permitted vehicles with a gross weight less than 150,000 - no restrictions. Permitted vehicles with a gross weight of 150,001 to 250,000 - drivers shall: Cross at a constant speed of no more than 10 mph while on bridge. Permitted vehicles with a gross weight of over 250,000 require a special structural analysis and approval from Pima County[3]
Silverbell Road	9230	Small Wash SPA	0.3 miles N. of Belmont (Lat. 32 Deg 19 Min 47.03 Sec N., Long. 111 Deg 04 Min 49.01 Sec W.)	23'-5"±	Permitted vehicles with a gross weight of 175,000 or less and no axle group weights greater than 70% of the axle group weight limits provided in Tables 3.01 to 3.09 - drivers shall: Cross on center of bridge at a constant speed of no more than 10 mph with no other vehicles on the bridge. Permitted vehicles with a gross weight of over 175,000 require a special structural analysis and approval from Pima County[3]

Table 4. Highway Structure Restrictions, Requirements, Conditions, and Allowances (cont'd)

Street Name	No.	Name	Restriction location	Clear Roadway Width[1]	Weight (lbs.)[2]
Flowing Wells Road	9339	Rillito River Bridge	South of Flowing Wells Rd./River Rd. (Lat. 32 Deg 17 Min 39.79 Sec N., Long. 110 Deg 59 Min 42.46 Sec W.)	64'-0"±	Permitted vehicles with a gross weight less than 150,000 - no restrictions. Permitted vehicles with a gross weight of 150,001 to 250,000 - drivers shall: Cross at a constant speed of no more than 10 mph while on bridge. Permitted vehicles with a gross weight of over 250,000 require a special structural analysis and approval from Pima County[3]
Trico Marana Road	9552	Santa Cruz River Bridge	4.05 miles W. of Rt. 84 (Lat. 32 Deg 27 Min 13.39 Sec N., Long. 111 Deg 16 Min 47.32 Sec W.)	30'-0"±	30,000 maximum gross
River Road	9557	Ventana Wash Bridge	0.3 miles W. of Sabino Canyon Rd (Lat. 32 Deg 16 Min 21.22 Sec N., Long. 110 Deg 50 Min 35.57 Sec W.)	28'-0"±	40,000 maximum gross
Alvernon Way (SB)	9812	Palo Verde Diversion Channel Bridge	SB Alvernon Way and Diversion Channel (Lat. 32 Deg 11 Min 38.59 Sec N., Long. 110 Deg 54 Min 38.03 Sec W.)	28'-0"±	Permitted vehicles with a gross weight of 250,000 or less - drivers shall: Cross on center of bridge at a constant speed of no more than 10 mph while on bridge. Permitted vehicles with a gross weight of over 250,000 require a special structural analysis and approval from Pima County[3]

Table 4. Highway Structure Restrictions, Requirements, Conditions, and Allowances (cont'd)

Street Name	No.	Name	Restriction location	Clear Roadway Width[1]	Weight (lbs.)[2]
Alvernon Way	9813	UPRR SB Frontage Road Bridge	Alvernon Way & UPRR (Lat. 32 Deg 10 Min 42.68 Sec N., Long. 110 Deg 54 Min 30.73 Sec W.)	40'-0"± NB 52'-0"± SB	Permitted vehicles with a gross weight of 150,000 or less - drivers shall: Cross on center of bridge at a constant speed of no more than 10 mph while on bridge with no other vehicles on same span as overweight vehicle. Permitted vehicles with a gross weight of over 150,000 require a special structural analysis and approval from Pima County[3]
Nogales Highway	10488	Bridge over Wash	9.1 miles N. of Junction I-19 (Lat. 32 Deg 01 Min 37.45 Sec N., Long. 110 Deg 56	32'-4"±	Legal weight as provided under 10.36.020, Table 1
Nogales Highway	10489	Bridge over Wash	9.5 miles N. of Junction I-19 (Lat. 32 Deg 02 Min 00.21 Sec N., Long. 110 Deg 56 Min 54.16 Sec W.)	32'-4"±	Legal weight as provided under 10.36.020, Table 1
Nogales Highway	10490	Wash Bridge	10.1 miles N. of Junction I-19 (Lat. 32 Deg 02 Min 29.71 Sec N., Long. 110 Deg 56 Min 57.08 Sec W.)	32'-4"±	Legal weight as provided under 10.36.020, Table 1
Nogales Highway	10491	Scoops Wash Bridge	10.5 miles N. of Junction I-19 (Lat. 32 Deg 02 Min 51.60 Sec N., Long. 110 Deg 57 Min 04.57 Sec W.)	32'-4"±	Legal weight as provided under 10.36.020, Table 1
Nogales Highway	10492	Budweiser Wash Bridge	11.6 miles N. of Junction I-19 (Lat. 32 Deg 03 Min 46.81 Sec N., Long. 110 Deg 57 Min 23.48 Sec W.)	32'-4"±	Legal weight as provided under 10.36.020, Table 1

Table 4. Highway Structure Restrictions, Requirements, Conditions, and Allowances (cont'd)

Street Name	No.	Name	Restriction location	Clear Roadway Width[1]	Weight (lbs.)[2]
La Cholla Boulevard (NB)	11301	Rillito River Bridge NB	South of La Cholla Blvd./River Rd. (Lat. 32 Deg 18 Min 09.23 Sec N., Long. 111 Deg 00 Min 43.04 Sec W.)	41'-0"±	Permitted vehicles with a gross weight less than 150,000 - no restrictions. Permitted vehicles with a gross weight of 150,001 to 250,000 - drivers shall: Cross at a constant speed of no more than 10 mph while on bridge with no other vehicles on same span as overweight vehicle. Permitted vehicles with a gross weight of over 250,000 require a special structural analysis and approval from Pima County[3]
La Cholla Boulevard (SB)	11302	Rillito River Bridge SB	South of La Cholla Blvd./River Rd. (Lat. 32 Deg 18 Min 09.66 Sec N., Long. 111 Deg 00 Min 43.91 Sec W.)	41'-0"±	Permitted vehicles with a gross weight less than 150,000 - no restrictions. Permitted vehicles with a gross weight of 150,001 to 250,000 - drivers shall: Cross at a constant speed of no more than 10 mph while on bridge with no other vehicles on same span as overweight vehicle. Permitted vehicles with a gross weight of over 250,000 require a special structural analysis and approval from Pima County[3]
Park Access Road	11303	Craycroft Wash Arch Culvert	Just North of Rillito Wash (Lat. 32 Deg 16 Min 14.37 Sec N. Long. 110 Deg 52 Min 32.71 Sec W.)	30'-0"±	Permitted vehicles with a gross weight of 250,000 or less - drivers shall: Cross on center of bridge at a constant speed of no more than 10 mph while on bridge. Permitted vehicles with a gross weight of over 250,000 require a special structural analysis and approval from Pima County[3]

Table 4. Highway Structure Restrictions, Requirements, Conditions, and Allowances (cont'd)

Street Name	No.	Name	Restriction location	Clear Roadway Width[1]	Weight (lbs.)[2]
Corta Vista Montanosa River Road	11305	Craycroft Wash Arch Culvert	Corta Vista Montanosa Road (Lat. 32 Deg 18 Min 18.46 N. Long. 110 Deg 52 Min 31.08 Sec W.)	24'-9"±	Permitted vehicles with a gross weight of 250,000 or less - drivers shall: Cross on center of bridge at a constant speed of no more than 10 mph while on bridge. Permitted vehicles with a gross weight of over 250,000 require a special structural analysis and approval from Pima County[3]
Magee Road	11437	Carmack Wash Arch Culvert	300' East of Old Magee Trail (Lat. 32 Deg 21 Min 05.53 Sec N. Long. 111 Deg 00 Min 26.78 Sec W.)	32'-0"± WB 29'-0"± EB	Permitted vehicles with a gross weight of 250,000 or less - drivers shall: Cross on center of bridge at a constant speed of no more than 10 mph while on bridge. Permitted vehicles with a gross weight of over 250,000 require a special structural analysis and approval from Pima County[3]
Sunset Road	11516	Santa Cruz River Bridge	0.5 miles West of I-10 (Lat. 32 Deg 18 Min 20.84 Sec N., Long. 111 Deg 02 Min 55.54 Sec W.)	46'-0"	Permitted vehicles with a gross weight less than 150,000 - no restrictions. Permitted vehicles with a gross weight of 150,001 to 250,000 - drivers shall: Cross at a constant speed of no more than 10 mph while on bridge with no other vehicles on same span as overweight vehicle. Permitted vehicles with a gross weight of over 250,000 require a special structural analysis and approval from Pima County[3]

Table 4. Highway Structure Restrictions, Requirements, Conditions, and Allowances (cont'd)

Street Name	No.	Name	Restriction location	Clear Roadway Width[1]	Weight (lbs.)[2]
Houghton Road	11543	UPRR Bridge NB	1.6 miles N. of I-10 (Lat. 32 Deg 04 Min 52.93 Sec N., Long. 110 Deg 46 Min 20.55 Sec W.)	44'-0"	Permitted vehicles with a gross weight of 250,000 or less - drivers shall: Cross on center of bridge at a constant speed of no more than 10 mph while on bridge with no other vehicles on same span as overweight vehicle. Permitted vehicles with a gross weight of over 250,000 require a special structural analysis and approval from Pima County[3]
Houghton Road	11544	UPRR Bridge SB	1.6 miles N. of I-10 (Lat. 32 Deg 04 Min 53.88 Sec N., Long. 110 Deg 46 Min 22.25 Sec W.)	44'-0"	Permitted vehicles with a gross weight of 250,000 or less - drivers shall: Cross on center of bridge at a constant speed of no more than 10 mph while on bridge with no other vehicles on same span as overweight vehicle. Permitted vehicles with a gross weight of over 250,000 require a special structural analysis and approval from Pima County[3]

Note 1: Clear roadway width of bridge reported. Transporter to determine width limitations along route unless noted otherwise.

Note 2: Vehicles crossing structures with movement restrictions (speed or location) shall be guided by pilot vehicles or law enforcement. Coordination of pilot vehicles or law enforcement is the responsibility of the transporter.

Note 3: If a special structural analysis is required for an overweight vehicle to cross a structure, the analysis is the responsibility of the transporter. The structural analysis shall be performed and signed and sealed by a registered Civil or Structural Engineer in the State of Arizona. The analysis shall conform to the AASHTO Manual for Bridge Evaluation, 2nd Edition with interim revisions to date and shall be submitted to Pima County for review and approval prior to the issuance of a permit.

Article 5. Envelope Permit Special Provisions

10.36.510. Envelope permit required recordkeeping.

A. An envelope permit holder shall maintain in this state, for at least three years, records and other data for all vehicles operated, and cargo transported, under an envelope permit as required under A.R.S.

§ 29-1149. The records and other data shall include:

1. Bills of lading,
2. Shipping manifests, and
3. Time cards or invoices.

B. A record retained by an envelope permit holder under subsection (A) shall contain, at least, the following information:

1. Date of document preparation,
2. Name of shipper and name of receiver,
3. Address of load origination,
4. Address of load destination, and
5. Dates of transport.

10.36.520. Envelope permit suspension.

The Director may suspend an envelope permit as prescribed under A.R.S. § 28-1147.

10.36.530. Envelope permit reapplication.

A. An envelope permit applicant denied issuance by the Department, as prescribed under A.R.S. § 28-1142, shall not reapply for an envelope permit for two years from the date of denial.

B. An envelope permit applicant, who has previously had an envelope permit revoked by the Department under A.R.S. § 28-1147, shall not reapply for an envelope permit for two years from the date of revocation.

C. Upon reapplication, an applicant shall show by a preponderance of evidence that the underlying cause for denial or revocation has been removed.

SECTION 3. This Ordinance will become effective 30 days from the date of the Board's approval.

SECTION 4. The various County officers and employees are authorized and directed to perform all acts necessary or desirable to give effect to this ordinance.

PASSED AND ADOPTED by the Board of Supervisors, Pima County, Arizona, this 12th day of December, 2017.

Chair, Pima County Board of Supervisors

ATTEST:

Julie Castañeda, Clerk of the Board

APPROVED AS TO FORM

~~Tobin Rosen~~, Deputy County Attorney
REGINA NASSEN