CITY OF TUCSON

AND

PIMA COUNTY

STANDARD DETAILS FOR PUBLIC IMPROVEMENTS

- 2003 -

CITY OF TUCSON

AND

PIMA COUNTY

STANDARD DETAILS FOR PUBLIC IMPROVEMENTS

In accordance with the intergovernmental agreement, dated October 7, 1998, and recorded in Docket 10897 at page 1046 in the Pima County Recorder's Office, between the City of Tucson and Pima County for updating City and County Standard Construction Specifications and Details, these Standard Details, 2003 Edition, consisting of Details: 100-109, 200-216, 300-314, 400-410, T101-T107, T203, T308-T313, T324, T325, T327, T400, T401, T405-T407, T410-T413, T417-T421, T430-T433, T444-T446, T710-T714, T800-T804, T901-T913, T1001-T1004, T1101, T1103-T1105, T1505, T1603, T1701, T1702, T1801, T1803, T1901-T1905, T2001, T2101, WWM A-1 – WWM A-5, WWM101-WWM111, WWM201-WWM214.2, WWM216-WWM225, WWM301-WWM307, WWM401, WWM402, WWM404, WWM504, WWM505, WWM507, WWM509-WWM511, W105, W107, W110, W115, W300, W305, W309-W312, W315-W318, W330, W331, W335, W350,W400, W500, W600, W610, W700-W710, W800,W900 and W1801 inclusive, are approved.

James W. Glock, P.E.
City of Tucson Director of Transportation

Registered Professional Engineer
CERTIFICATE NO. 19227
JAMES W. GLOCK
Date signed 2/12/03
ARIZONA U.S.A.

Kurt Weinrich, P.E.
County Engineer

Registered Professional Engineer (Civil)
CERTIFICATE NO. 37558
KURT WEINRICH
DATE SIGNED 2/12/03
ARIZONA U.S.A.

STANDARD DETAILS

INDEX

SERIES 100 – GENERAL AND MISCELLANEOUS

100	PLAN SYMBOLS
101	ABBREVIATIONS
102	MAIL RECEPTACLE
103	SURVEY MONUMENT
104	CONCRETE STAIRWAY
105	BARRICADE RAILING
105.1	HORSE GATE
106	POST BARRICADE
107	REMOVABLE POST BARRICADE
108	PIPE BEDDING
109	SCREEN WALL

SERIES 200 – STREETS

200	CONCRETE SIDEWALK
201	BRICK SIDEWALK
202	DECORATIVE CONCRETE SIDEWALK/WALKWAY
203	CONCRETE SIDEWALK: NEW TO EXISTING CONNECTION
204	SIDEWALK SCUPPER – TYPE 1
205	SIDEWALK SCUPPER – TYPE 2
205.5	SIDEWALK SCUPPER – TYPE 3
206	DRIVEWAY APRON
207	CURB ACCESS RAMPS
208	CONCRETE VALLEY GUTTER
209	CONCRETE CURBS
210	CONCRETE CURB TRANSITION
211	CONCRETE CURB: NEW TO EXISTING CONNECTION
212	CONCRETE CURB TERMINAL SECTION
213	CONCRETE HEADER
214	CURBED MEDIAN NOSES
215	CONCRETE BARRIER TRANSITION
216	UTILITY TRENCH PAVEMENT PATCHES

STANDARD DETAILS

INDEX

SERIES 300 – DRAINAGE

300 STORM DRAIN MANHOLE BASE (48" DIA. AND SMALLER)
301 STORM DRAIN MANHOLE BASE (51" DIA. AND LARGER)
302 STORM DRAIN MANHOLE
303 STORM DRAIN MANHOLE HEIGHT ADJUSTMENT
304 STORM DRAIN MANHOLE FRAME AND COVER
305 CATCH BASIN GUTTER DEPRESSION AND SPACING
306 CATCH BASIN GENERAL NOTES
307 CATCH BASIN – TYPE 1
308 CATCH BASIN – TYPE 3
309 CATCH BASIN – TYPE 4
310 CATCH BASIN – TYPE 5
311 CATCH BASIN GRATES
312 STORM DRAIN TRANSITION STRUCTURE
313 HEADWALLS
314 BANK PROTECTION EARTHWORK PAY LIMITS

SERIES 400 – LANDSCAPE

400 IRRIGATION TRENCHING
401 GATE/ISOLATION VALVE
402 QUICK COUPLER
403 DRIP ZONE / REMOTE CONTROL VALVE
404 DRIP SYSTEM FILTER
405 PULL BOX FOR 12 V. ELEC. SYS.
406 EMITTER INSTALLATION
407 EMITTER LINE FLUSH
408 SHRUB PLANTING
409 DESERT PLANTING
410 TREE PLANTING

STANDARD DETAILS

INDEX

SERIES T – TRAFFIC SIGNAL AND ROADWAY LIGHTING

T 101 NO. 3-1/2 PULLBOX
T 102 NO. 5 PULLBOX
T 103 NO. 5 PULLBOX EXTENSION
T 104 NO. 7 PULLBOX
T 105 NO. 7 PULLBOX EXTENSION
T 106 PULLBOX INSTALLATION
T 107 STREET LIGHT POLE WIRING DIAGRAM
T 203 CONTROL CABINETS FOUNDATION (TYPE IV, V)
T 308 TYPE I PEDESTAL CABINET AND FOUNDATION
T 309 TYPE I CONTROL CABINET
T 310 TYPE III CONTROL CABINET
T 312 TYPE IV CONTROL CABINET
T 313 TYPE V CONTROL CABINET
T 324 LIGHTING DESIGN CRITERIA
T 325 TYPE 1 STREET LIGHTING CABINET
T 327 TEE VENT (OPTIONAL)
T 400 GENERAL NOTES
T 401 TYPE "A" POLE
T 405 TYPE "E" POLE & MAST ARM
T 406 TYPE "F" POLE & MAST ARM
T 407 TYPE "G" POLE & MAST ARM
T 410 TYPE "J" POLE & MAST ARM
T 411 TYPE "K" POLE & MAST ARM
T 412 TYPE "Q" POLE & MAST ARM
T 413 TYPE "R" POLE & MAST ARM
T 417 HAND HOLE DETAIL
T 418 POLE DRILLING DETAIL
T 419 TYPE I PEDESTRIAN PUSH BUTTON POST
T 420 TYPE II PEDESTRIAN PUSH BUTTON POST
T 421 STRAIN POLE & MAST ARM
T 430 MAST ARM FOR WOOD POLE
T 432 SPREAD FOUNDATION (TYPE "Q" AND "J" POLES)
T 433 SPREAD FOUNDATION (TYPE "E", "F", "G", 1 AND 2 POLES)
T 444 TYPE 1 STREET LIGHT POLE
T 445 TYPE 2 STREET LIGHT POLE
T 446 STREET LIGHTING POLE TYPE D AND E
T 710 6' X 6' LOOP DETECTOR
T 711 BICYCLE LANE LOOP DETECTOR
T 712 PRESENCE LOOP DETECTOR

STANDARD DETAILS

INDEX

SERIES T – TRAFFIC SIGNAL AND ROADWAY LIGHTING (CONTINUED)

T 713 UNDERGROUND CONDUIT
T 714 6 X 6 PRESENCE MULTI–LOOP DETECTOR
T 800 STANDARD PHASING DETAIL
T 801 SIGNAL FACES WITH BACKPLATES
T 802 VISORS 8" & 12" SIGNALS
T 803 TYPICAL SIGNAL HEAD
T 804 PEDESTRIAN SIGNAL – MAN/HAND STYLE
T 901 TYPE I & II MOUNTING ASSEMBLY
T 902 TYPE III & IV MOUNTING ASSEMBLY
T 903 TYPE V MOUNTING ASSEMBLY
T 904 TYPE VI MOUNTING ASSEMBLY
T 905 TYPE VII MOUNTING ASSEMBLY
T 906 TYPE VIII MOUNTING ASSEMBLY
T 907 TYPE IX MOUNTING ASSEMBLY
T 908 TYPE X MOUNTING ASSEMBLY
T 909 TYPE XI MOUNTING ASSEMBLY
T 910 SPAN WIRE MOUNTING TERMINAL HANGER
T 911 2–WAY SPAN WIRE MOUNTING ASSEMBLY
T 912 3–WAY SPAN WIRE MOUNTING ASSEMBLY
T 913 4–WAY SPAN WIRE MOUNTING ASSEMBLY
T 1001 MISCELLANEOUS SIGNAL MOUNTING PARTS
T 1002 MAST ARM PLUMBIZER
T 1003 POLE PLATE DETAIL
T 1004 TERMINAL COMPARTMENT SIDE MOUNT & POLE TOP MOUNT
T 1101 TYPE I PEDESTRIAN PUSH BUTTON
T 1103 PLACARDS FOR PEDESTRIAN PUSH BUTTONS
T 1104 PLACARDS FOR PEDESTRIAN PUSH BUTTONS (INTERNATIONAL)
T 1105 PEDESTRIAN PUSH BUTTON MEDIAN CROSSWALK LOCATION
T 1505 PHOTOELECTRIC CELL MOUNTING
T 1603 GUARD POST
T 1701 SERVICE STREET LIGHT ASSEMBLY (UNMETERED)
T 1702 MID–SPAN JUMPER POLE
T 1801 SERVICE PEDESTAL (METERED)
T 1803 SERVICE PEDESTAL (UNMETERED)
T 1901 PRE–EMPT SENSOR WIRING
T 1902 PRE–EMPT SENSOR ASSEMBLY
T 1903 PRE–EMPT BEACON ASSEMBLY
T 1904 ILLUMINATED STREET SIGN (I.S.S.) INSTALLATION
T 1905 VIDEO DETECTION SYSTEM AUTO SCOPE INSTALLATION
T 2001 TELEPHONE DROP
T 2101 SPAN WIRE TRAFFIC SIGNAL INSTALLATION

STANDARD DETAILS
INDEX

SERIES WWM – SANITARY SEWER

GENERAL

A–1	GUIDELINES FOR VARIANCES
A–2	WASTEWATER PUMPING SYSTEMS
A–3	GRAVITY OR PRESSURE SEWER
A–4	LANDSCAPING
A–5	FLOW MANAGEMENT PLAN

GRAVITY MAINS

WWM 101	PIPE SUPPORTED SANITARY SEWER
WWM 102	SEWER MAIN REPAIR
WWM 103	COUPLING UNLIKE PIPE MATERIALS TOGETHER
WWM 104	RIGID PIPE BEDDING FOR SANITARY SEWERS
WWM 105	FLEXIBLE PIPE BEDDING FOR SANITARY SEWER
WWM 106	GENERAL NOTES – SEWER CONSTRUCTION
WWM 107	DEFLECTION TESTING MANDREL
WWM 108	SEWER/WATER CROSSING DETAILS
WWM 109	SANITARY SEWER EASEMENT
WWM 110	RIGHT ANGLE TURN AROUND
WWM 111	TYPICAL SEWER EASEMENT SECTION

MANHOLES, CLEANOUTS & APPURTENANT ITEMS

WWM 201	MANHOLE BASE (21" DIA. PIPE AND SMALLER)
WWM 202	MANHOLE BASE (24" TO 48" DIA. PIPE)
WWM 203	MANHOLE STUB–OUT AND BLOCK–OUT
WWM 204	STANDARD BRICK MANHOLE*
WWM 205	PRECAST CONCRETE MANHOLE (4' DIA.)*
WWM 206	STANDARD 5' DIA. PRECAST CONCRETE MANHOLE (5' DIA.)*
WWM 207	SHALLOW MANHOLE
WWM 208	FLAT TOP MANHOLE (4' DIA.)
WWM 209	FLAT TOP MANHOLE – TYPE"A"
WWM 210	FLAT TOP MANHOLE – TYPE"B"
WWM 211	FLAT TOP MANHOLE – TYPE"C"
WWM 212	CONCRETE MANHOLE COLLAR (UNPAVED AREAS)
WWM 213.0	MANHOLE FRAME AND COVER (STANDARD)
WWM 213.1	MANHOLE FRAME AND COVER (24")
WWM 213.2	MANHOLE FRAME AND COVER (24" WATERPROOF)
WWM 213.3	MANHOLE FRAME AND COVER (24" BOLTED)
WWM 214.0	MANHOLE FRAME AND COVER (30")
WWM 214.1	MANHOLE FRAME AND COVER (30" WATERPROOF)
WWM 214.2	MANHOLE FRAME AND COVER (30" BOLTED)

STANDARD DETAILS

INDEX

SERIES WWM – SANITARY SEWER (CONTINUED)

MANHOLES, CLEANOUTS & APPERTENANT ITEMS (CONT.)

WWM	216	MANHOLE STEP – TYPE 1
WWM	217	MANHOLE STEP – TYPE 2
WWM	218	MANHOLE STEP – TYPE 3
WWM	219	CONCRETE WEIR
WWM	220	REDWOOD GATE
WWM	221.1	MANHOLE VENT ASSEMBLY
WWM	221.2	MODIFIED MANHOLE VENT ASSEMBLY
WWM	222	PRECAST CONCRETE MANHOLE SAFETY LANDING
WWM	223	MANHOLE JOINT REINFORCEMENT
WWM	224	SEWER MARKER
WWM	225	MONITORING STATION

MODIFICATION OF EXISTING SYSTEM FACILITIES

WWM	301	CONNECTION TO EXISTING MANHOLE (NON–REINFORCED BASE)
WWM	302	CONNECTION TO EXISTING MANHOLE (REINFORCED BASE)
WWM	303	NEW MANHOLE OVER AN EXISTING SEWER
WWM	304	BRICK MANHOLE GRADE ADJUSTMENT
WWM	305	PRECAST CONC. MANHOLE GRADE ADJUSTMENT
WWM	306	FLAT TOP MANHOLE GRADE ADJUSTMENT
WWM	307	MANHOLE CHANNEL COVER

HOUSE CONNECTIONS

WWM	401	HOUSE CONNECTION SEWER (H.C.S.)
WWM	402	H.C.S. CONNECTION TO MANHOLE
WWM	404	H.C.S. REROUTING

PRESSURE SEWER SYSTEM

WWM	504	MARKER TAPE LOCATION
WWM	505	PRESSURE MAIN CONNECTION TO MANHOLE
WWM	507	PRESSURE SEWER LOCATION MONUMENT
WWM	509	PRIVATE PUMP STATION DUAL OUTLET AIR INJECTION PANEL
WWM	510	SHADE AND EQUIPMENT SUPPORT STRUCTURE
WWM	511	TEST STATION

*DENOTES DETAIL NO LONGER ACCEPTED FOR NEW CONSTRUCTION

STANDARD DETAILS

INDEX

SERIES W – WATER SYSTEM MODIFICATION

W–105	GENERAL CONSTRUCTION NOTES
W–107	DRAINAGE FACILITY CROSSING DETAILS
W–110	CUSTOMER NOTIFICATION
W–115	PIPE BEDDING AND TRENCH BACKFILL
W–300	VALVE BOX INSTALLATION
W–305	VALVE NUT EXTENSION
W-309	WATER SERVICE NOTES
W–310	WATER SERVICE CONNECTIONS (3/4" (20 mm) AND 1" (25 mm) SINGLE)
W–311	SPLIT SERVICE CONNECTIONS (1 INCH (25 mm))
W–312	WATER SERVICE CONNECTIONS (1 1/2 INCH (40 mm) AND 2 INCH (50 mm) SINGLE)
W–315	NOTES FOR BORING SERVICE LINES
W–316	SERVICE RENEWALS AND TIE OVERS
W–317	PURGING OF SERVICE LINES
W–318	METER BOXES
W–330	AIR RELEASE VALVE INSTALLATION, (3/4"(20 mm) OR 1" (25 mm))
W-331	AIR RELEASE VALVE INSTALLATION (2"(50 mm))
W–335	STANDARD VAULT
W–350	SYSTEM ABANDONMENT
W–400	DRAIN VALVE ASSEMBLY
W–500	FIRE HYDRANT INSTALLATION
W–600	RESTRAINED JOINTS
W–610	CONCRETE THRUST BLOCKING
W–700	CORROSION MONITORING SYSTEM NOTES
W–701	TEST LEAD PLACEMENT
W–702	PIPE JOINT BONDING
W–703	EXOTHERMIC WELDING
W–704	FLANGE INSULATING KIT
W–705	CORROSION TEST STATION (FLUSH GRADE INSTALLATION)
W–706	CORROSION TEST STATION (ABOVE GRADE INSTALLATION)
W–707	SPLICING DETAIL
W–708	PERMANENT REFERENCE ELECTRODE INSTALLATION
W–709	JUNCTION BOX
W–710	TYPES OF CORROSION TEST STATIONS
W–800	BORING AND CASING NOTES
W–900	CONCRETE CYLINDER PIPE TAP
W–1801	BACKFLOW PREVENTION FOR POTABLE WATER FIRE HYDRANT OR STANDPIPE WATER SERVICE

PEN SIZE CONVERSIONS TO PLOTTER LINE WIDTHS

PEN SIZE	PLOTTER LINE WIDTH	
	INCH	MILLIMETER
0000	0.007	0.18
000	0.010	0.25
00	0.012	0.30
0	0.014	0.35
1	0.020	0.50
2	0.024	0.60
3	0.032	0.80
4	0.048	1.20

FEATURE	PEN SIZE	NEW	PEN SIZE	EXISTING
CITY LIMITS			1	
COUNTY LINE			2	
PROPERTY LINE			0	PL
RIGHT-OF-WAY LINE	3	NEW	1	EXISTING
EASEMENT LINE	2		0	
CONSTRUCTION ℄	0	CONSTR. ℄		
CONSTRUCTION ℄, STATION MARKS	0	10		
RIGHT-OF-WAY MARKER	1	1/8" (3 mm)		1/8" (3 mm)
MILE POST	0	3/32" MP (2 mm)	00	3/32" MP (2 mm)
STATE OR NATIONAL BOUNDARY			4	
FOREST OR RESERVATION BOUNDARY			2	
TOWNSHIP OR RANGE LINE			2	

ISSUED:	STANDARD DETAIL	DETAIL NO.
10/88	PLAN SYMBOLS	100
REVISED: 7/02		SHEET 1 OF 11

100018.DWG 08/22/00 07:59

FEATURE	PEN SIZE	NEW	PEN SIZE	EXISTING
SECTION LINE			1	℄
QUARTER SECTION LINE			1	1/4 ℄
SIXTEENTH SECTION LINE			1	1/16 ℄
SECTION CORNERS			00	2 1 / 11 12 1/8" (3 mm)
QUARTER CORNERS			00	1/8" (3 mm)
BENCH MARK	1		00	
SURVEY MONUMENT	1	SM 7/64" (3 mm)	00	SM 7/64" (3 mm)
SURVEY CONTROL POINT	1	1/16" (2 mm)	00	1/16" (2 mm)
ANGLE POINT	0	1/8" (3 mm)	00	1/8" (3 mm)
℄ GRADE PROFILE	2		0	
GROUND LINE PROFILE	1		0	
GROUND LINE SECTION	0		00	
WATER SURFACE ELEVATION, 100 YEAR	2	100 YR.	0	100 YR.
CURB, SINGLE	1		00	
CURB AND GUTTER WITH DEPRESSED CURB	1		00	
PAVEMENT (PENCIL SHADING ON BACK)	1	WITH C & G / NO GUTTER	00	

ISSUED:	STANDARD DETAIL	DETAIL NO.
10/88	PLAN SYMBOLS	100
REVISED: 7/02		SHEET 2 OF 11

CITY OF TUCSON FOUNDED 1775

THE SEAL of PIMA COUNTY ARIZONA

100028.DWG 08/22/00 08:02

FEATURE	PEN SIZE	NEW	PEN SIZE	EXISTING
EXISTING PAVEMENT			00	
SIDEWALK	1		00	
TURNOUT	1		00	
TOP OF CUT	0	—C— C—		
TOE OF FILL	0	—F— F—		
TRANSITION: CUT TO FILL	0	—C—o—F—		
SECTION: ASPHALTIC CONCRETE PAVEMENT	1			
CONCRETE PAVEMENT	1			
STABILIZED BASE TREATMENT	1			
SECTION: AGGREGATE BASE	1			
SELECT MATERIAL	1			
DIKE	1		00	
ROCK RIPRAP	1		00	
DRAINAGE CHANNEL	1		00	
MAJOR WASH			00	NAME
MINOR WASH			00	
BRIDGE	1		00	
BUILDING	0		0	

ISSUED:	STANDARD DETAIL	DETAIL NO.
10/88	PLAN SYMBOLS	100
REVISED: 7/02		SHEET 3 OF 11

CITY OF TUCSON FOUNDED 1775

THE SEAL of PIMA COUNTY ARIZONA

100038.DWG 08/02/00 08:30

FEATURE	PEN SIZE	NEW	PEN SIZE	EXISTING
BUILDING ELEV. PROFILE	0	F.F.E.	0	F.F.E.
RAILROAD TRACK (1" ≦ 20') (≦ 1:240)			00	
RAILROAD TRACK (1" > 20') (> 1:240)			00	
CATCH BASIN, SINGLE CURB	1		00	
CATCH BASIN, CURB AND GUTTER	1		00	
CATCH BASIN, MEDIAN DIKE	1		00	
CATCH BASIN, OFF ROADWAY, FLUSH	1		00	
CATCH BASIN, GRATING, SINGLE CURB	1		00	
CATTLE GUARD	1		00	
CONCRETE BOX CULVERT	1		00	
SLOTTED DRAIN	1		00	
TRANSVERSE STREET GRATE	1		00	
EMBANKMENT SPILLWAY, ONE WAY	0		00	
EMBANKMENT SPILLWAY, TWO WAY	0		00	
STRAIGHT HEADWALL WITH END SECTION (1"=20') (1:240)	1		00	
STRAIGHT HEADWALL WITH END SECTION (1"=100') (1:1200)	1		00	
"U" HEADWALL WITH END SECTION (1"=20') (1:240)	1		00	

ISSUED:	STANDARD DETAIL	DETAIL NO.
10/88	PLAN SYMBOLS	100
REVISED: 7/02		SHEET 4 OF 11

100048.DWG 08/02/00 08:34

FEATURE	PEN SIZE	NEW	PEN SIZE	EXISTING
"U" HEADWALL WITH END SECTION (1"=100') (1:1200)	1		00	
WING HEADWALL WITH END SECTION (1"=20') (1:240)	1		00	
WING HEADWALL WITH END SECTION (1"=100') (1:1200)	1		00	
WIRE FENCE AND GATE	0		00	
CHAIN LINK FENCE AND GATE	0		00	
BLOCK WALL	1		00	
GUARD RAIL AND BREAKAWAY CABLE TERMINAL	1		00	
PIPE BARRICADE OR POST AND CABLE	1	3/64" (1 mm)	00	3/64" (1 mm)
VALLEY GUTTER	1		00	
GAS LINE	1	3" G (75 mm)	00	3" G (75 mm)
TELEPHONE BOOTH	0	T 5/64" (2 mm)	00	T 5/64" (2 mm)
POWER OR JOINT USE POLE	1	P.P. T./P.P 1/16" (2 mm)	00	P.P. T./P.P 1/16" (2 mm)
UNDERGROUND TELEPHONE LINE	1	UGT	00	UGT
UNDERGROUND ELECTRIC LINE	1	UGE	00	UGE
UTILITY POLE WITH DOWN GUY AND ANCHOR	1	OR 1/16" (2 mm)	00	OR 1/16" (2 mm)
UNDERGROUND CABLE TELEVISION			00	CTV
UNDERGROUND FIBER OPTICS			00	FO
ELECTRIC TRANSFORMER, PAD MOUNTED	1	7/64" (3 mm)	00	7/64" (3 mm)

ISSUED:	STANDARD DETAIL	DETAIL NO.
10/88	PLAN SYMBOLS	100
REVISED: 7/02		SHEET 5 OF 11

100058.DWG 08/02/00 08:35

FEATURE	PEN SIZE	NEW	PEN SIZE	EXISTING
TELEPHONE/POWER PEDESTAL	1	T P	00	T P
CATV PEDESTAL	1	CATV	00	CATV
FIRE HYDRANT	0	1/8" (3 mm)	00	1/8" (3 mm)
PALM TREE	0		00	
SHRUB, HEDGE, ETC.	0		00	
UNCLASSIFIED TREE	0		00	
ADVERTISING SIGN, LARGE			00	1/16" (2 mm)
ADVERTISING SIGN, SMALL			00	1/16" (2 mm)
TRAFFIC SIGN, SINGLE POST	1	1/16" (2 mm)	00	1/16" (2 mm)
TRAFFIC SIGN, TWO OR MORE POSTS	1	1/16" (2 mm)	00	1/16" (2 mm)
MAIL BOX	0			
DIMENSIONS	00	25' (7.6 m)		
VISIBLE OUTLINES, SECTIONS, ETC.	1		00	
MANHOLE, SANITARY SEWER	1	1/8" (3 mm)		1/8" (3 mm)
MANHOLE, STORM SEWER	1	1/8" (3 mm)		1/8" (3 mm)
MANHOLE FRAME AND COVER, RESET	1	1/8" (3 mm)		
MANHOLE, WATER	1	W 1/6" (4 mm)		W 1/6" (4 mm)
MANHOLE, RECLAIMED WATER	1	R 1/6" (4 mm)		R 1/6" (4 mm)
IRRIGATION DITCH, CONCRETE	0	IRR	00	IRR

ISSUED:	STANDARD DETAIL	DETAIL NO.
10/88	PLAN SYMBOLS	100
REVISED: 7/02		SHEET 6 OF 11

CITY OF TUCSON FOUNDED 1775

THE SEAL of PIMA COUNTY ARIZONA

100068.DWG 08/01/00 14:53

FEATURE	PEN SIZE	NEW	PEN SIZE	EXISTING
IRRIGATION DITCH, EARTH	0	IRR	00	IRR
IRRIGATION LINE	0	IRR 24" (610 mm)	00	IRR 24" (610 mm)
SANITARY SEWER	2	S 8" (205 mm)	00	S 8" (205 mm)
STORM DRAIN	2	SD 24" (610 mm)	00	SD 24" (610 mm)
CLEAN OUT	0	C.O. 5/64" (2 mm)	00	C.O. 5/64" (2 mm)
HOUSE CONNECTION SEWER	1	HCS	00	HCS
TRAFFIC PEDESTRIAN CONTROL BUTTON	1	1/8" (3 mm)	00	1/8" (3 mm)
TRAFFIC CONTROL CABINET WITH FOUNDATION	1		00	
PULL BOX (1), NO. 3-1/2	1	7/64" (3 mm)	00	7/64" (3 mm)
PULL BOX, NO. 5	1	7/64" (3 mm)	00	7/64" (3mm)
PULL BOX, NO. 5 W/ EXTENSION	1	7/64" (3 mm)	00	7/64" (3 mm)
PULL BOX NO. 7	1		00	
PULL BOX NO. 7 W/ EXTENSION	1		00	
SERVICE CABINET W/ FOUNDATION	1		00	
RAILROAD CABINET W/ FOUNDATION	1		00	
DETECTOR LOOP	1		00	

(1) TELEPHONE PULL BOXES SHALL BE DESIGNATED BY "T", ELECTRIC BY "E" AND TRAFFIC BY "TS" (TYP. ALL SIZES)

ISSUED:	STANDARD DETAIL	DETAIL NO.
10/88	PLAN SYMBOLS	100
REVISED: 7/02		SHEET 7 OF 11

CITY OF TUCSON FOUNDED 1775

THE SEAL OF PIMA COUNTY ARIZONA

100078.DWG 08/01/00 14:56

FEATURE	PEN SIZE	NEW	PEN SIZE	EXISTING
TRAFFIC COUNT STATION	1		00	
POLE W/ LUMINAIRE: (W/O AND WITH MAST ARM)	1	5/64" (2 mm)	00	5/64" (2 mm)
LUMINAIRE W/ PHOTOCELL (ON POLE)	1		00	
LUMINAIRE W/ PHOTOCELL	1		00	
TRAFFIC SIGNAL	1		00	
POLE WITH MAST ARM AND SIGNAL	1		00	
TRAFFIC SIGNAL WITH TURN ARROW	1		00	
FLASHING SIGNAL	1		00	
PEDESTRIAN SIGNAL	1		00	
POLE KEY NUMBER	1	B	00	B
CONDUIT RUN NUMBER	1	1	00	
WATER OR GAS METER BOX	0	W OR G 3/32" (2 mm)	00	W OR G 3/32" (2 mm)
WATER OR GAS VALVE	1	1/8" (3 mm)	0	1/8" (3 mm)
WATER MAIN	3	W 6" (150 mm)	0	W 6" (150 mm)
RECLAIMED WATER MAIN	1	RW	00	RW 8"
AIR RELEASE VALVE (ARV)	1	A	00	A
CORROSION MONITORING TEST STATION	1	A	00	A
RECTIFER	1	R	00	R

ISSUED:	STANDARD DETAIL	DETAIL NO.
10/88	PLAN SYMBOLS	100
REVISED: 7/02		SHEET 8 OF 11

CITY OF TUCSON FOUNDED 1775

THE SEAL of PIMA COUNTY ARIZONA

100DBB.DWG 07/26/00 11:46

FEATURE	PEN SIZE	NEW	PEN SIZE	EXISTING
FIRE PROTECTION SERVICE			0	FPS(ADDRESS) W
END CAP	3		0	
MATERIAL CHANGE	3	W 6" (150 mm)	0	W 6" (150 mm)
BENDS, HORIZ. & VERT.	3		0	
RECLAIMED AIR RELEASE VALVE	1	A R	0	A R
STEEL OR CONCRETE CASING FOR PIPE	1		0	
PROTECTED WATERMAIN (Cover Sheet Only)	1		00	
MARKER POST	1		00	
BLOW-OFF VALVE	1	1/8" (3 mm)	00	1/8" (3 mm)
ABANDONMENT (CUT & PLUG)	0			
STANDPIPE			00	W
SERVICE TIE-OVER	1	T (SIZE)		
SERVICE TO BE RENEWED	1	R (SIZE)		
SERVICE STUB	1	S (SIZE)		
SERVICE LINE ADJUSTMENT	1	S A (SIZE)		
METER RELOCATION, SERVICE LINE RENEWAL	1	M R (SIZE)		
METER RELOCATION, SERVICE LINE ADJUSTMENT	1	M A (SIZE)		
SPLIT METER RELOCATION, SERVICE LINE RENEWAL	1	M R (SIZE) SPLIT		
SPLIT METER RELOCATION, SERVICE LINE ADJUSTMENT	1	M A (SIZE) SPLIT		

ISSUED:	STANDARD DETAIL	DETAIL NO.
10/88	PLAN SYMBOLS	100
REVISED: 7/02		SHEET 9 OF 11

100088.DWG 07/26/00 11:46

FEATURE	PEN SIZE	NEW	PEN SIZE	EXISTING
VALVE IN MANHOLE	1		0	
CHECK VALVE (Arrow in Direction of Flow)	1	W	00	W
PRESSURE REDUCING VALVE (— Direction of Flow)	1	P.R.V.	00	P.R.V.
16" (400 mm) AND LARGER VALVE WITH BY-PASS VALVE	1		00	
REDUCER	1		00	
TEE, CROSS, AND BEND	1		00	
BUTTERFLY VALVE	1		0	
RECLAIMED VALVE	1	R R	00	
DRAIN VALVE ASSEMBLY (DVA)	1		00	

ISSUED:	STANDARD DETAIL	DETAIL NO.
10/88	PLAN SYMBOLS	100
REVISED: 7/02		SHEET 10 OF 11

CITY OF TUCSON FOUNDED 1775

THE SEAL of PIMA COUNTY ARIZONA

10008B.DWG 07/26/00 11:46

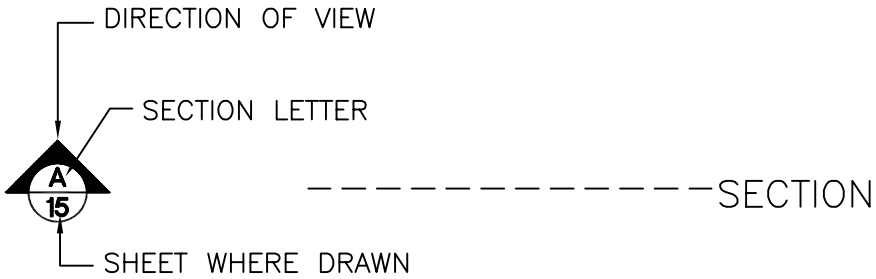

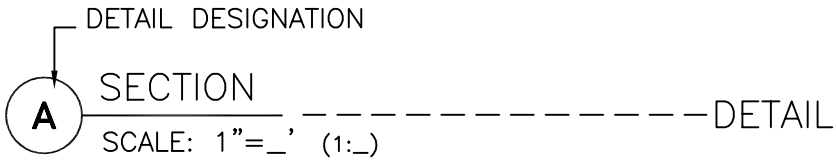

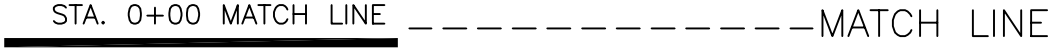

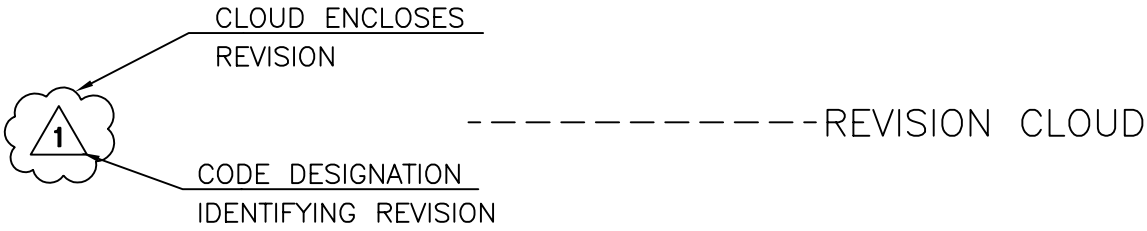

ISSUED:		STANDARD DETAIL		DETAIL NO.
10/88		PLAN SYMBOLS		100
REVISED:				
7/02				SHEET 11 OF 11

10009B.DWG 08/02/00 08:37

A.B.C. — AGGREGATE BASE COURSE
AC. — ACRE
A.C. — ASPHALTIC CONCRETE
ADDN. — ADDITION
A.D.T. — AVERAGE DAILY TRAFFIC
AGG. — AGGREGATE
∡ — ANGLE POINT
APP. — APPROVED
APPROX. — APPROXIMATE
APT. — APARTMENT
@ — AT
AVE. — AVENUE
AVG. — AVERAGE
AZ. — ARIZONA

B.C. — BEGIN CURVE
B.C.R. — BEGIN CURB RETURN
B.C.S.M. — BRASS CAP SURVEY MONUMENT
BDY. — BOUNDARY
BEG. — BEGIN
BIT.MIX — BITUMINOUS MIX
BLDG. — BUILDING
BLK. — BLOCK
BLVD. — BOULEVARD
B.M. — BENCH MARK
BOR. — BORROW
BRG. — BEARING
B.V.C. — BEGIN VERTICAL CURVE

C — CUT OR CHORD
C.A. — CEMENT ASBESTOS
C.A.P. — CORRUGATED ALUMINUM PIPE
C.A.P.A. — CORRUGATED ALUMINUM PIPE ARCH
C.B. — CATCH BASIN
CEM. — CEMENT
℄ — CENTER LINE
C.F. — CUBIC FOOT
C.F.S. — CUBIC FT. PER SECOND
C.G. — CATTLE GUARD

NOTE: PERIODS IN ABBREVIATIONS ARE NECESSARY AS SHOWN

ISSUED:		STANDARD DETAIL		DETAIL NO.
10/88	CITY OF TUCSON FOUNDED 1775	ABBREVIATIONS	THE SEAL of PIMA COUNTY ARIZONA	101
REVISED: 7/02				SHEET 1 OF 7

101018.DWG 07/26/00 11:56

CHKD.	CHECKED
C.I.	CAST IRON
C.I.P.	CAST IN PLACE
C/L	CONTROL LINE
C.M.P.	CORRUGATED METAL PIPE
C.M.P.A.	CORRUGATED METAL PIPE ARCH
C.M.U.	CONCRETE MASONRY UNIT
C.O.	CLEAN OUT
CO.	COUNTY
COMP.	COMPACTION
CONC.	CONCRETE
CONC.DRWY.	CONCRETE DRIVEWAY
COND.	CONDUIT
CONST.	CONSTRUCTION
CONST. ℄	CONSTRUCTION CENTERLINE
CONT.	CONTINUOUS
COR.	CORNER
CORR.	CORRUGATED
C.O.T.	CITY OF TUCSON
C.S.	CURVE TO SPIRAL
C.S.P.	CORRUGATED STEEL PIPE
C.S.P.A.	CORRUGATED STEEL PIPE ARCH
CSTG.	CASTING
CTR.	CENTER
CTRS.	CENTERS
C.Y.	CUBIC YARDS
D	DEGREE OF CURVE
D.A.	DRAINAGE AREA
DEPT.	DEPARTMENT
DIA. or Ø	DIAMETER
DIM.	DIMENSION
D.I.P.	DUCTILE IRON PIPE
DKT.	DOCKET
DR.	DRIVE
DRWY.	DRIVEWAY
DWG.	DRAWING
E	EAST
EA.	EACH
E.C.	END CURVE
E.C.R.	END CURB RETURN

ELEC. — ELECTRIC
ELEV. or EL. — ELEVATION
EMBKMT. — EMBANKMENT
ENGR. — ENGINEER
EQUA. — EQUATION
ESMT. — EASEMENT
E.V.C. — END VERTICAL CURVE
EXCAV. — EXCAVATION
EXIST. — EXISTING
EXP. — EXPANSION
EXT. — EXTEND, EXTENSION, EXTERNAL

F — FILL
F.B. — FIELD BOOK
FD. or FND. — FOUND
FED. — FEDERAL
F.F.E. — FINISH FLOOR ELEVATION
FIG. — FIGURE
FIN. — FINISH
F.H. — FIRE HYDRANT
FL. — FLOOR
F.L. or FL — FLOW LINE
FT. or ' — FOOT OR FEET
FUT. — FUTURE
FWY. — FREEWAY

G. — GUTTER
GA. — GAUGE
GALV. — GALVANIZE
GOV'T. — GOVERNMENT
GR. — GRADE
G.R. — GUARD RAIL
GRND. — GROUND

ha — HECTARE
H.C.S. — HOUSE CONNECTION SEWER
HDR. — HEADER
HDWL. — HEADWALL
HEX. — HEXAGONAL
HGT. or HT. — HEIGHT
HNDRL. — HANDRAIL
HORIZ. — HORIZONTAL

ISSUED:		STANDARD DETAIL		DETAIL NO.
10/88	CITY OF TUCSON FOUNDED 1776	ABBREVIATIONS	THE SEAL of PIMA COUNTY ARIZONA	101
REVISED: 7/02				SHEET 3 OF 7

10103B.DWG 07/26/00 12:01

H.P.	HORSEPOWER
H.T.	HUB AND TACK
HR.	HOUR
H.W.	HOUSE WALK
HWY.	HIGHWAY
I.D.	INSIDE DIAMETER
INCL.	INCLUDED
IN. or "	INCH OR INCHES
IN PL.	IN PLACE
INSP.	INSPECTION
INV.	INVERT
I.P.	IRON PIN OR IRON PIPE
JCT.	JUNCTION
JT.	JOINT
KWY.	KEYWAY
kg/m^2	KILOGRAMS PER SQUARE METER
km/hr	KILOMETERS PER HOUR
kPa	KILOPASCALS
L	LENGTH OF CURVE
LAB.	LABORATORY
LAT.	LATITUDE
L.C.P.	LEAD CAP PIPE
LGTH.	LENGTH
LIN. FT. or L.F.	LINEAR FOOT
LONG.	LONGITUDINAL
LT.	LEFT
m	METER
m^2	SQUARE METER
m^3	CUBIC METER
m^3/sec	CUBIC METER PER SECOND
MAX.	MAXIMUM
MAS.	MASONRY
MATL.	MATERIAL
MAX.	MAXIMUM
M.B.	MAIL BOX
M.GAL.	THOUSAND GALLONS
MH.	MANHOLE
MIN.	MINIMUM
MISC.	MISCELLANEOUS
℄	MONUMENT LINE
mm	MILLIMETER
MO.	MONTH

ISSUED:	STANDARD DETAIL	DETAIL NO.
10/88	ABBREVIATIONS	101
REVISED: 7/02		SHEET 4 OF 7

CITY OF TUCSON FOUNDED 1775

THE SEAL of PIMA COUNTY ARIZONA

101048.DWG 08/01/00 14:57

MON. ——————————MONUMENT
M.P.H.——————————MILES PER HOUR

N——————————NORTH
NATL. ——————————NATIONAL
NE——————————NORTHEAST
NO., NOS.——————————NUMBER OR NUMBERS
#——————————NUMBER
N.T.S.——————————NOT TO SCALE
NW ——————————NORTHWEST

O.C.——————————ON CENTERS
O.D.——————————OUTSIDE DIAMETER
O.P.——————————OPEN PIPE
OPNG. ——————————OPENING

PAV. ——————————PAVING
PAV'T. ——————————PAVEMENT
PC. (PCS.)——————————PIECE(S)
P.C.——————————POINT OF CURVATURE
P.C.C.——————————PORTLAND CEMENT CONCRETE
PCDOT ——————————PIMA COUNTY DEPT. OF TRANSPORTATION
PCFCD ——————————PIMA COUNTY FLOOD CONTROL DISTRICT
PCWWMD ——————————PIMA COUNTY WASTEWATER MANAGEMENT DEPARTMENT
PED.——————————PEDESTAL
/——————————PER
%——————————PERCENT
PG.——————————PAGE
P.I.——————————POINT OF INTERSECTION
PKWY.——————————PARKWAY
PL.——————————PLACE (FOR STREET NAME)
℄ ——————————PROPERTY LINE
P.MH——————————PRIVATE MANHOLE
P.P——————————POWER POLE
P.R.C.——————————POINT OF REVERSE CURVATURE
PREFAB. ——————————PREFABRICATED
PROP.——————————PROPOSED
PROT.——————————PROTECTION
P.R.V.C.——————————POINT OF REVERSE VERTICAL CURVATURE
P.S.F.——————————POUNDS PER SQUARE FOOT
P.S.I.——————————POUNDS PER SQUARE INCH
P.S.S.——————————PRIVATE SANITARY SEWER
PT.——————————POINT
P.T.——————————POINT OF TANGENCY

P. & TP. — POWER AND TELEPHONE POLE
P.V.C. — POLYVINYL CHLORIDE
P.V.I. — POINT OF VERTICAL INTERSECTION

Q — QUANTITY OF DRAINAGE RUNOFF

R — RADIUS OR RANGE
R.C.B.C. — REINFORCED CONCRETE BOX CULVERT
R.C.P. — REINFORCED CONCRETE PIPE
RD. — ROAD
RDWY. — ROADWAY
REF. — REFERENCE
REINF. — REINFORCED
REQD. — REQUIRED
RET. — RETURN
REV. — REVISED
R.R. — RAILROAD
RT. — RIGHT
R/W or R.O.W. — RIGHT-OF-WAY

S — SOUTH
S.C. — SPIRAL TO CURVE
S.D. — STORM DRAIN OR SIGHT DISTANCE
SDWLK. — SIDEWALK
SE — SOUTHEAST
SEC. — SECTION
SEL. MATL. — SELECT MATERIAL
S.F. or □' — SQUARE FEET
SHR. — SHRINKAGE
SHT. — SHEET
SK. — SKEW
℄ — SURVEY LINE
S.L. — SECTION LINE
S.M. — SURVEY MONUMENT
S.M.H. — SANITARY MANHOLE
SPEC.(S) — SPECIFICATION(S)
SQ. — SQUARE
S.S. — SANITARY SEWER (PCWWMD)
S.S. (DESIGNATE OWNER) — SANITARY SEWER (NON-PCWWMD)
S.T. — SPIRAL TO TANGENT
ST. — STREET
STA. — STATION
STD. — STANDARD

ISSUED:		STANDARD DETAIL		DETAIL NO.
10/88	CITY OF FOUNDED 1776 TUCSON	ABBREVIATIONS	THE SEAL of PIMA COUNTY ARIZONA	101
REVISED: 7/02				SHEET 6 OF 7

101068.DWG 08/01/00 15:43

STIR.----------STIRRUPS
STL----------STEEL
STR.----------STRAIGHT
STRUCT.----------STRUCTURAL
SUB. OR SUBD.----------SUBDIVISION
SW----------SOUTHWEST
S.Y.----------SQUARE YARD
SYM.----------SYMMETRICAL

T.----------TANGENT (CURVE DATA)
T----------TOWNSHIP
T.C.----------TOP OF CURVE
TELE.----------TELEPHONE OR TELEGRAPH
T.M.H.----------TELEPHONE MANHOLE
T.O.----------TURN OUT
TOPO.----------TOPOGRAPHIC
T.P.----------TURNING POINT
TRANS.----------TRANSITION
T.S.----------TRAFFIC SIGNAL OR TANGENT TO SPIRAL
TYP.----------TYPICAL

V.C.P.----------VITRIFIED CLAY PIPE
VERT.----------VERTICAL
VOL.----------VOLUME

W----------WEST
W/----------WITH
W.M.----------WATER METER
W.M.H.----------WATER MANHOLE
W.S.EL.----------WATER SURFACE ELEVATION
W.V.----------WATER VALVE
W.W.F.----------WELDED WIRE FABRIC

XSEC.----------CROSS-SECTION

YD.----------YARD

ISSUED:		STANDARD DETAIL		DETAIL NO.
10/88		ABBREVIATIONS		101
REVISED:				
7/02				SHEET 7 OF 7

TRADITIONAL AND CONTEMPORARY BOX STYLES			
SIZE	INCHES (APPROXIMATE)		
	LENGTH	WIDTH	HEIGHT
1.....	19 (485 mm)	6-1/2 (165 mm)	8-1/2 (215 mm)
1-A.....	21 (535 mm)	8 (205 mm)	10-1/2 [1] (265 mm)
2.....	23-1/2 (600 mm)	11-1/2 (290 mm)	13-1/2 (345 mm)
[1] OPTIONAL LETTER SLOT			

A LIST OF SUGGESTED MFG'S MAY BE OBTAINED
FROM THE UNITED POSTAL SERVICE
1501 S. CHERRYBELL
TUCSON, ARIZONA 85706

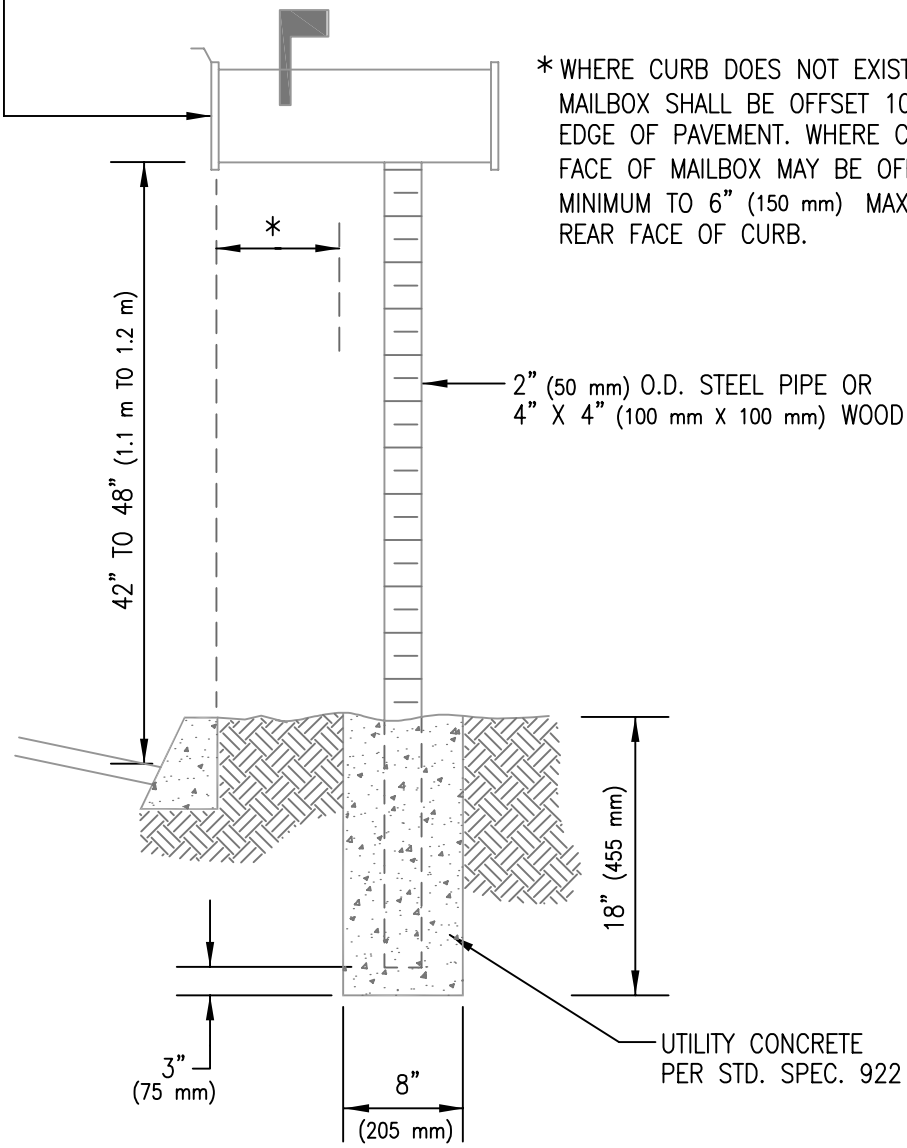

ISSUED:	STANDARD DETAIL	DETAIL NO.
10/88	MAIL RECEPTACLE	102
REVISED: 7/02		SHEET 1 OF 2

10201B.DWG 08/02/00 08:41

NOTE:

NDCBU'S SHALL BE LOCATED AND INSTALLED OUTSIDE OF SIGHT VISIBILITY TRIANGLES. ON UNCURBED ROADWAYS, LOCATION OF NDCBU SHALL BE AS NOTED IN THE PLANS OR AS DIRECTED BY THE ENGINEER.

*PLACE NDCBU BETWEEN CURB & SIDEWALK, IF THIS DISTANCE IS 5' (1.5 m) OR MORE, ROTATE NDCBU TO FACE SIDEWALK

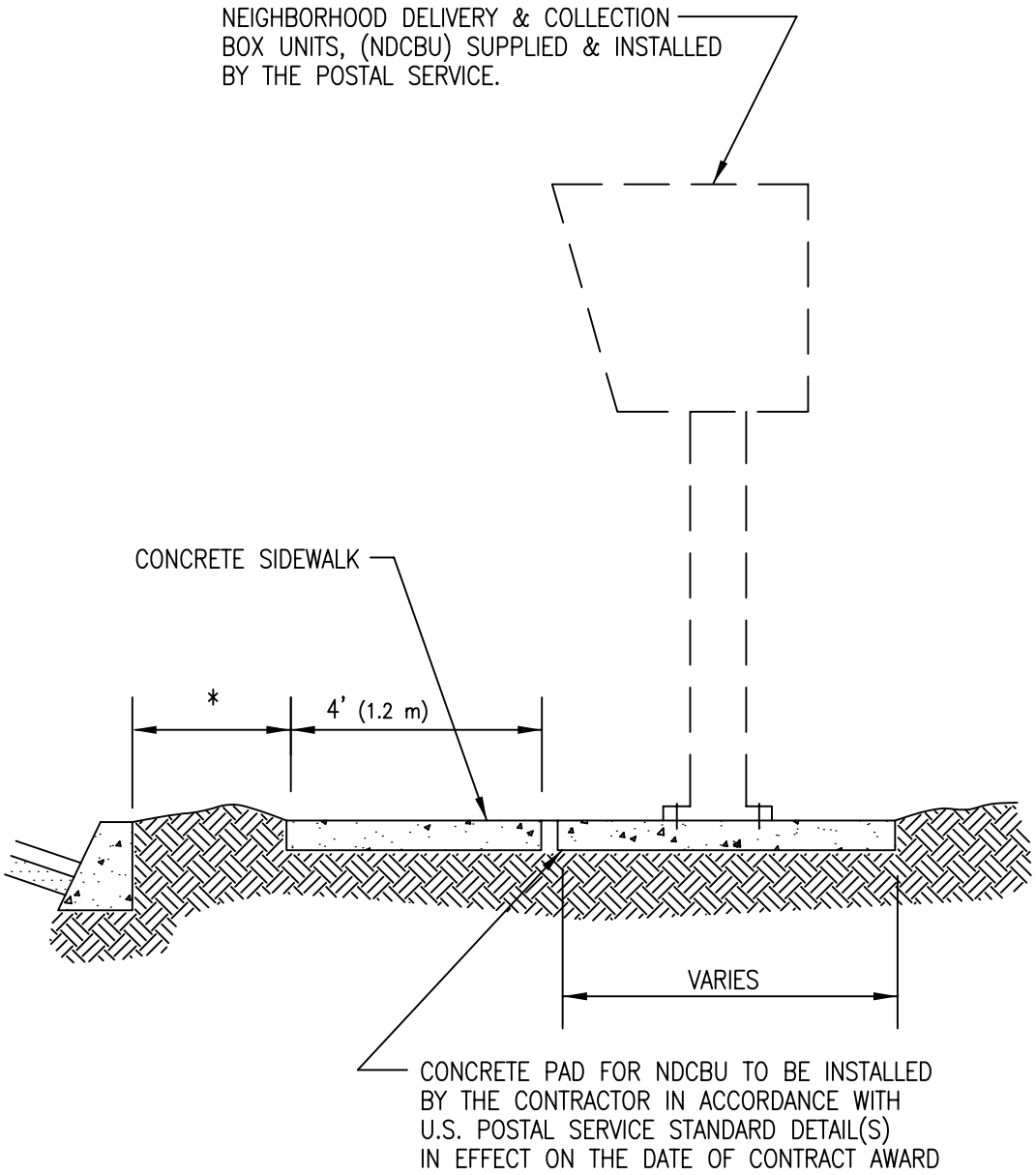

ISSUED:		STANDARD DETAIL		DETAIL NO.
10/88		MAIL RECEPTACLE		102
REVISED:				SHEET 2 OF 2
7/02				

102028.DWG 08/02/00 08:41

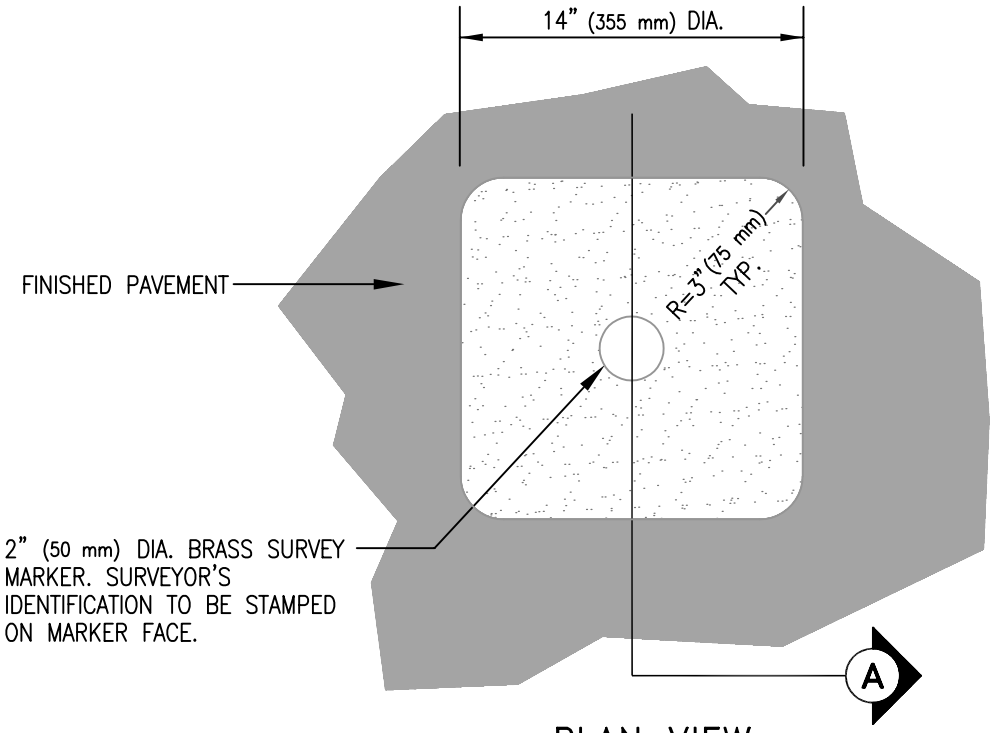

PLAN VIEW

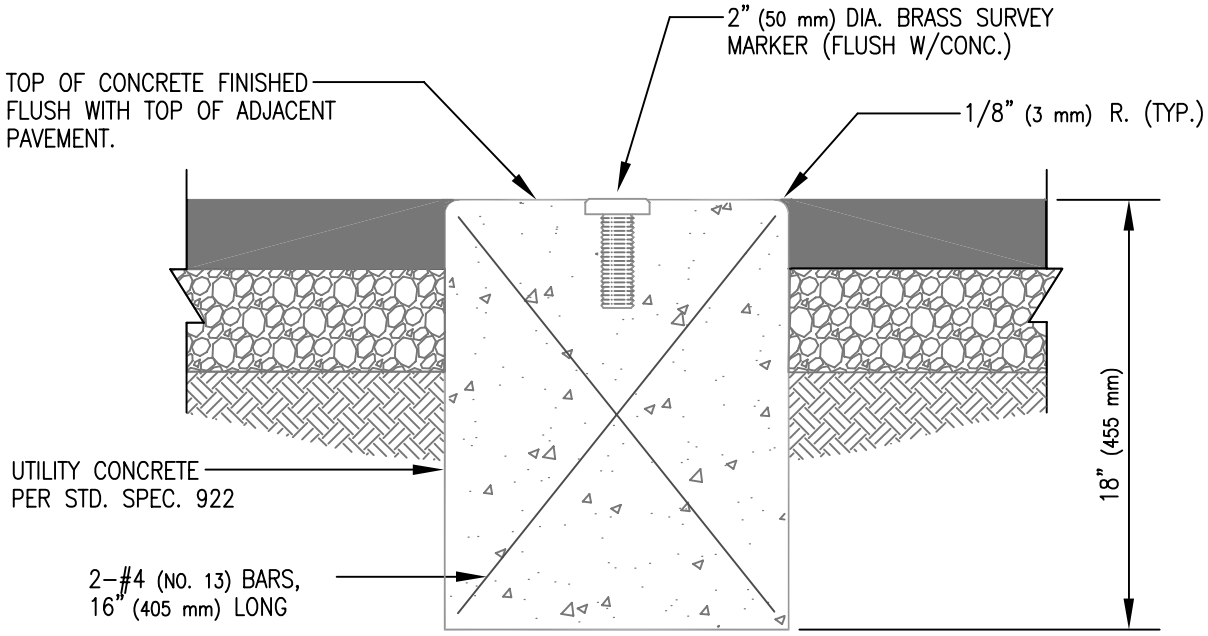

A SECTION

NOTE: THE 2-#4 (NO. 13) BARS MAY BE REPLACED BY A MAGNET, OF A SIZE APPROVED BY THE AGENCY, PLACED AT THE BASE OF THE BRASS MARKER

ISSUED:		STANDARD DETAIL		DETAIL NO.
10/88	CITY OF TUCSON FOUNDED 1775	SURVEY MONUMENT	THE SEAL of PIMA COUNTY ARIZONA	103
REVISED: 7/02				SHEET 1 OF 3

103018.DWG 08/03/00 15:46

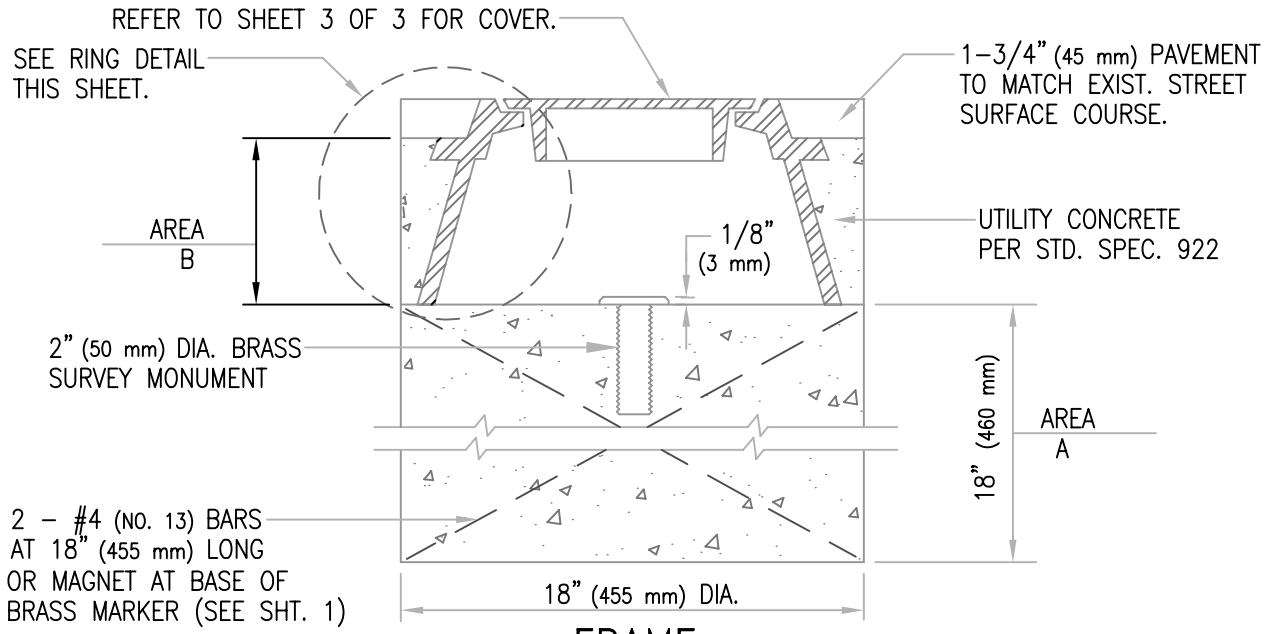

FRAME

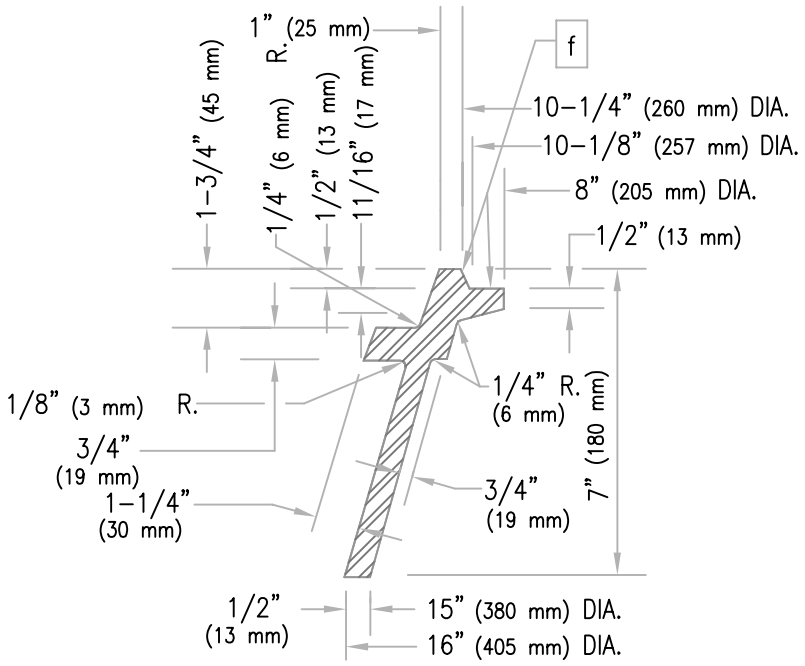

RING

NOTES:

1. SURVEY MARKER, FRAME AND COVER, COMPLETE-IN-PLACE, SHALL BE CONSIDERED A SINGLE UNIT.
2. FRAME AND COVER SHALL BE FIRST CLASS GREY IRON, TOUGH AND EVEN GRAINED.
3. FRAME TO BE SET ON CONCRETE AND LEFT FREE TO SLIDE.
4. BRASS MARKER TO BE SET BY CONTRACTOR AND MARKED BY SURVEYOR.
5. SURVEYORS REGISTRATION NUMBER TO BE STAMPED ON BRASS CAP.
6. AREA "B" TO BE PLACED AFTER AREA "A" HAS ACHIEVED INITIAL SET.
7. PORTIONS OF THE FRAME TO BE MACHINE FINISHED ARE SHOWN BY THE SYMBOL [f]. THE ALLOWABLE TOLERANCE FOR MACHINED AREAS SHALL BE 1/64" (0.4 mm).

ISSUED:		STANDARD DETAIL		DETAIL NO.
10/88	CITY OF TUCSON FOUNDED 1776	SURVEY MONUMENT FRAME AND COVER	THE SEAL of PIMA COUNTY ARIZONA	103
REVISED: 7/02				SHEET 2 OF 3

10302B.DWG 08/02/00 10:44

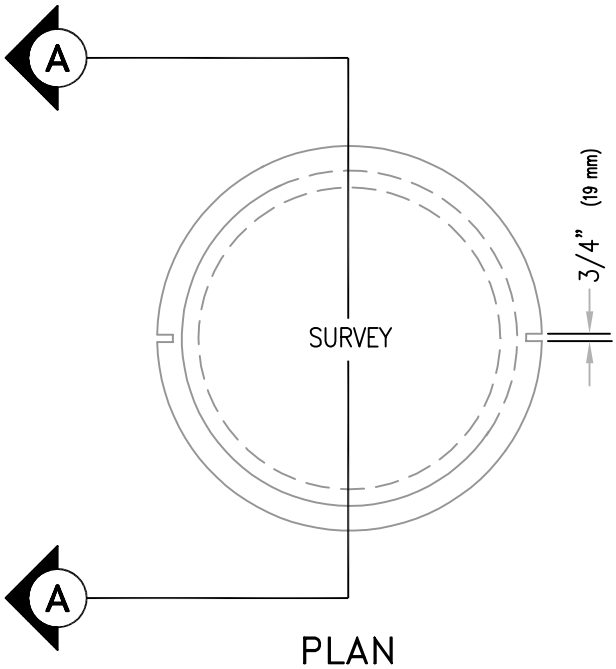

PLAN

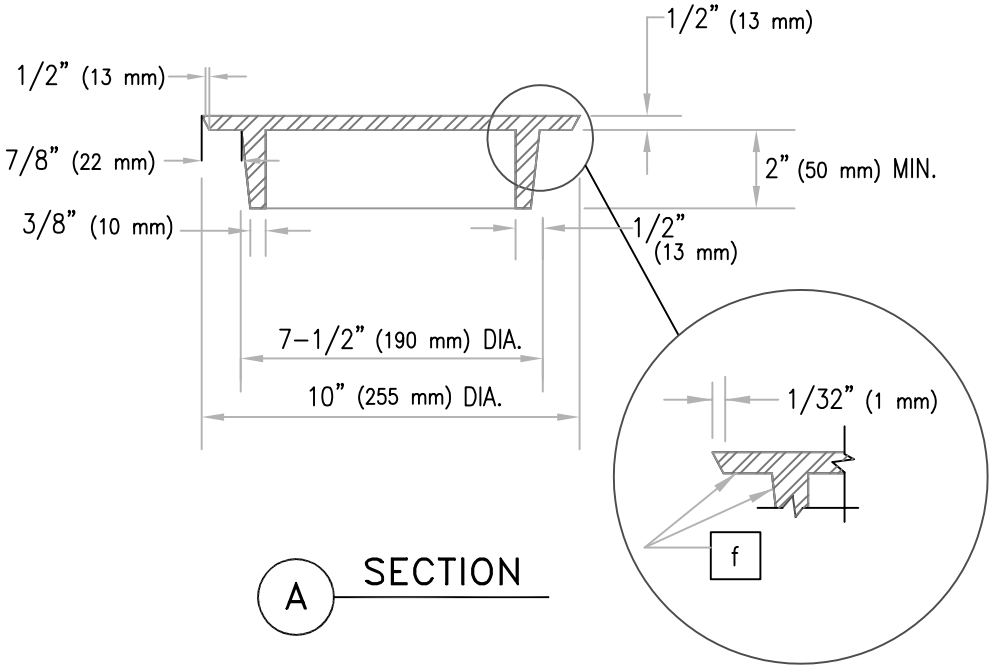

A SECTION

NOTES:

1. COVERS SHALL WEIGH A MINIMUM OF 16 POUNDS (7 kg).
2. LETTERS ON COVERS SHALL BE BLOCK 5/8" X 3/4" (16 mm X 19 mm) AND RAISED 1/16" (2 mm) , 1/8" (3 mm) WIDE.
3. PORTIONS OF THE COVER TO BE MACHINE FINISHED ARE SHOWN BY THE SYMBOL f , THE ALLOWABLE TOLERANCE FOR MACHINED AREAS SHALL BE 1/64" (0.5 mm).

ISSUED:		STANDARD DETAIL		DETAIL NO.
10/88	CITY OF FOUNDED 1776 TUCSON	SURVEY MONUMENT COVER	THE SEAL of PIMA COUNTY ARIZONA	103
REVISED: 7/02				SHEET 3 OF 3

103038.DWG 08/02/00 09:03

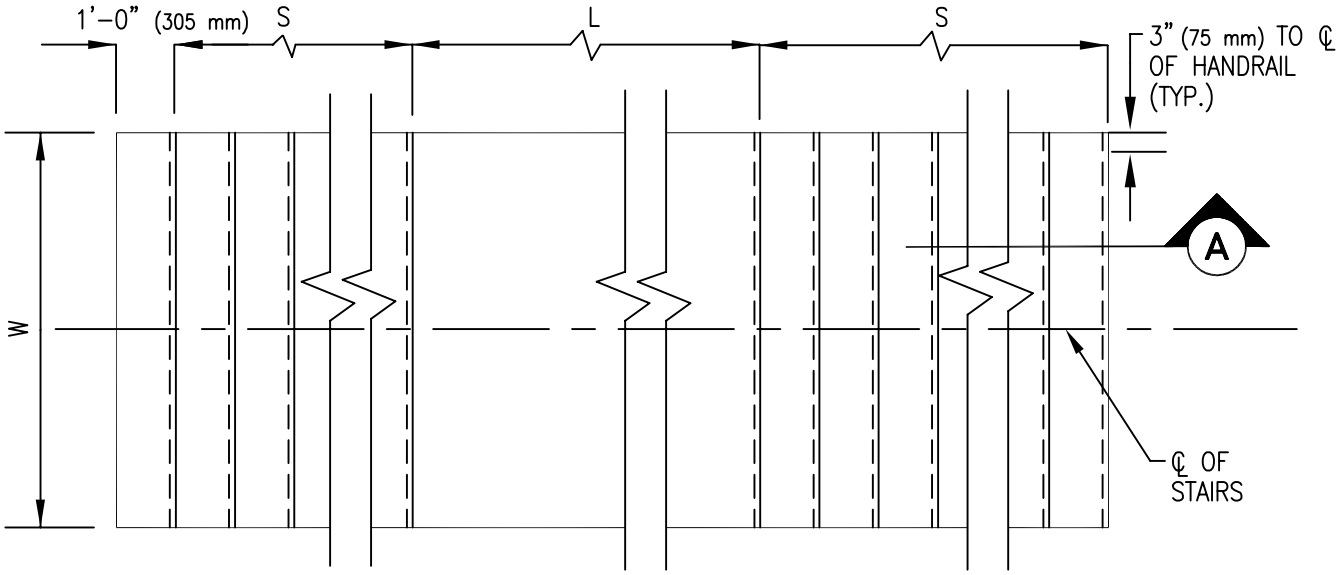

PLAN

REFER TO THE PROJECT PLANS FOR FOLLOWING INFORMATION:
STAIRWAY LOCATION
W=WIDTH OF STAIRWAY (PER UNIFORM BUILDING CODE)
L=LENGTH OF LANDING
T=TREAD LENGTH (PER UNIFORM BUILDING CODE)
R=RISER HEIGHT (PER UNIFORM BUILDING CODE)
S=LENGTH OF STAIRWAY FLIGHT
RAILING SHALL BE 1-1/2" (40 mm) I.D. STD. STEEL PIPE. THE RAILING SHALL COMPLY WITH UNIFORM BUILDING CODE AND ANSI A117.1 AS APPLICABLE.
CONCRETE SHALL BE CLASS "S", 3,000 PSI (20.7MPa)

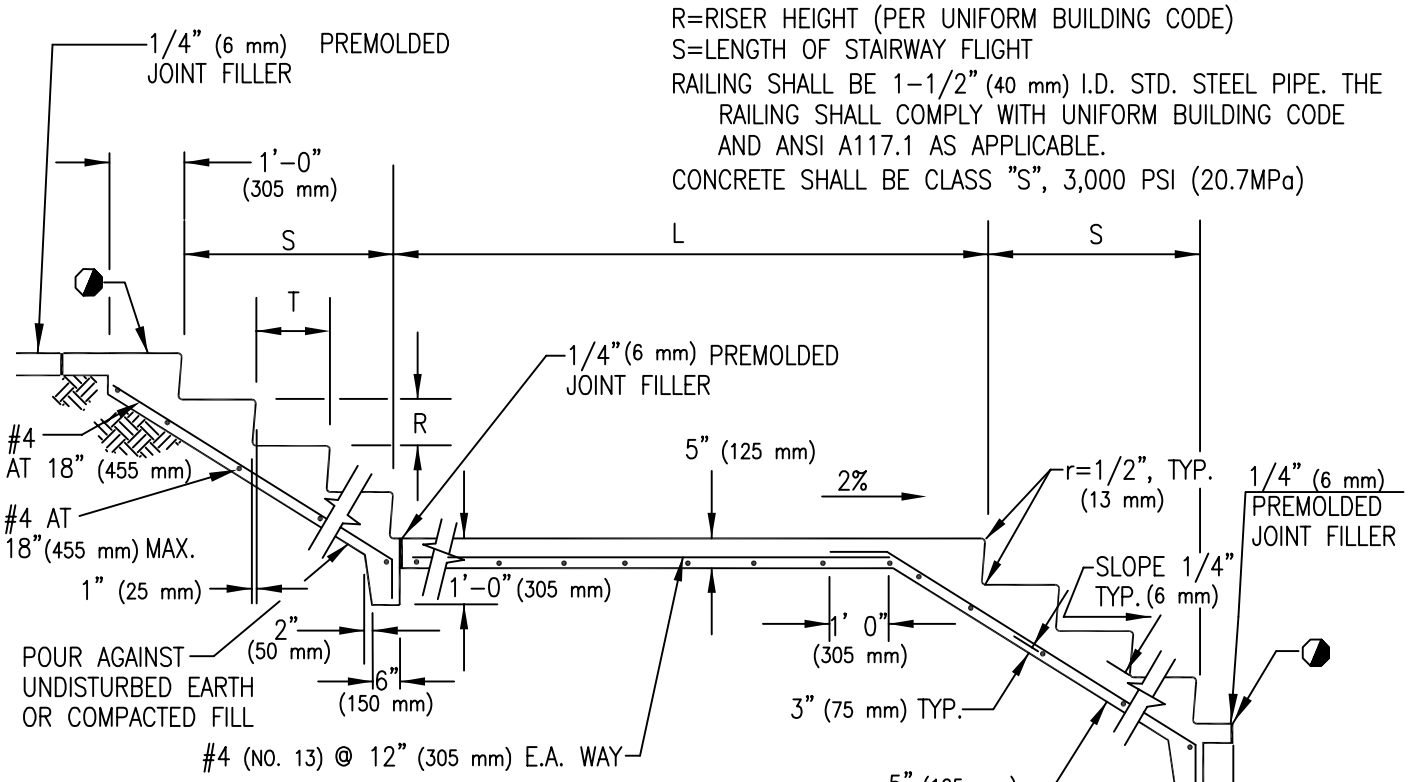

PROVIDE A 6 INCH (150 mm)(MINIMUM) LANDING WHERE STAIRWAY ABUTS A SIDEWALK AS SHOWN

A SECTION

ISSUED:		STANDARD DETAIL		DETAIL NO.
10/88	CITY OF TUCSON FOUNDED 1776	CONCRETE STAIRWAY	THE SEAL of PIMA COUNTY ARIZONA	104
REVISED: 7/02				SHEET 1 OF 1

104B.DWG 08/03/00 15:47

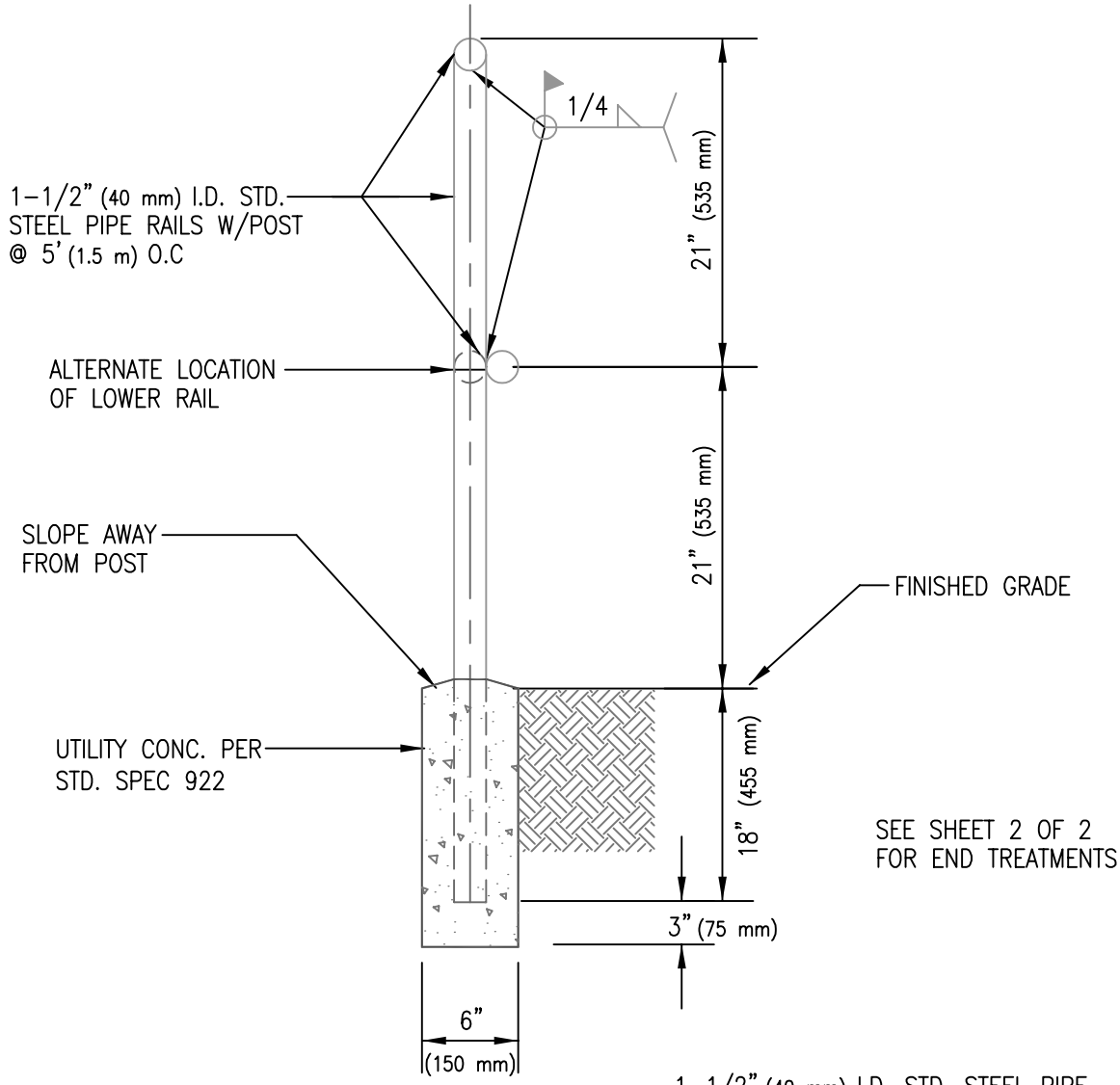

SEE SHEET 2 OF 2 FOR END TREATMENTS

SECTION

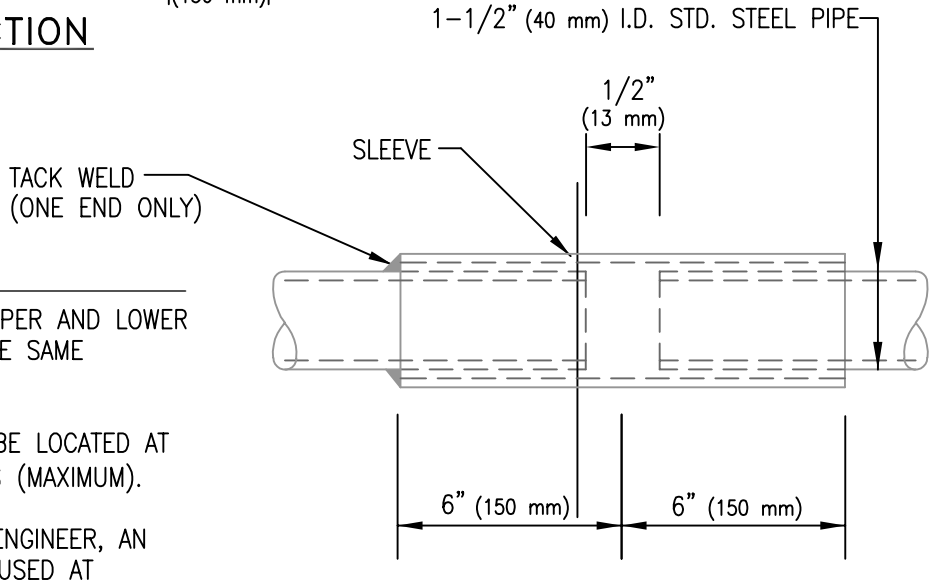

EXPANSION JOINT DETAIL

NOTES:

1. EXPANSION JOINTS FOR UPPER AND LOWER RAILS SHALL OCCUR AT THE SAME LOCATION.
2. EXPANSION JOINTS SHALL BE LOCATED AT 30 FOOT (9 m) INTERVALS (MAXIMUM).
3. WHEN APPROVED BY THE ENGINEER, AN INTERNAL SLEEVE MAY BE USED AT EXPANSION JOINTS.

ISSUED:		STANDARD DETAIL		DETAIL NO.
10/88	CITY OF TUCSON FOUNDED 1776	BARRICADE RAILING	THE SEAL of PIMA COUNTY ARIZONA	105
REVISED: 7/02				SHEET 1 OF 2

10501B.DWG 08/02/00 09:12

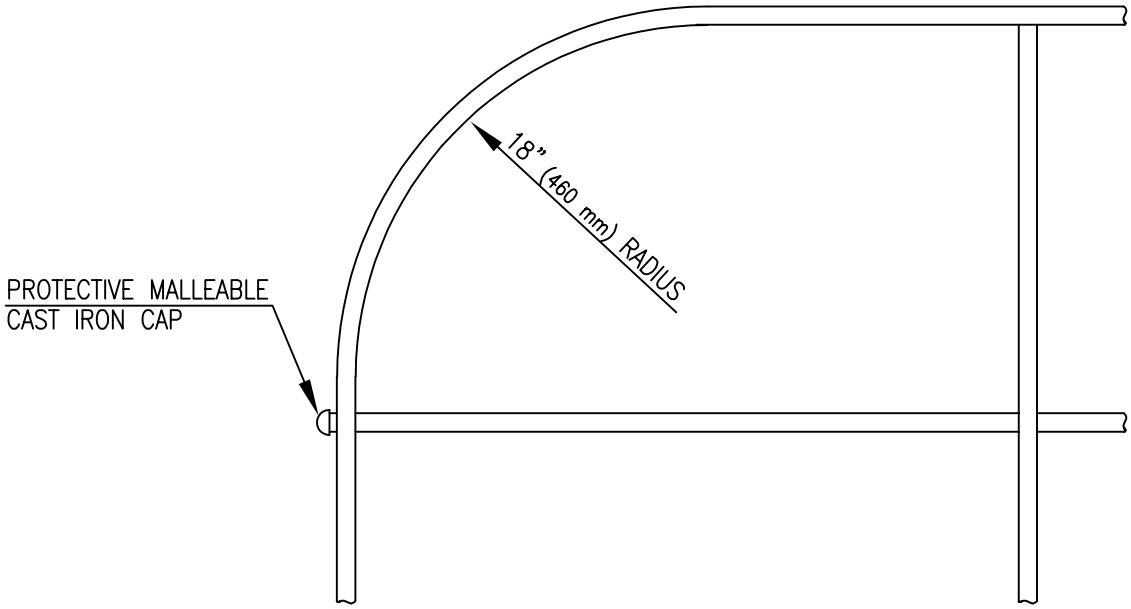

END TREATMENT 'A'

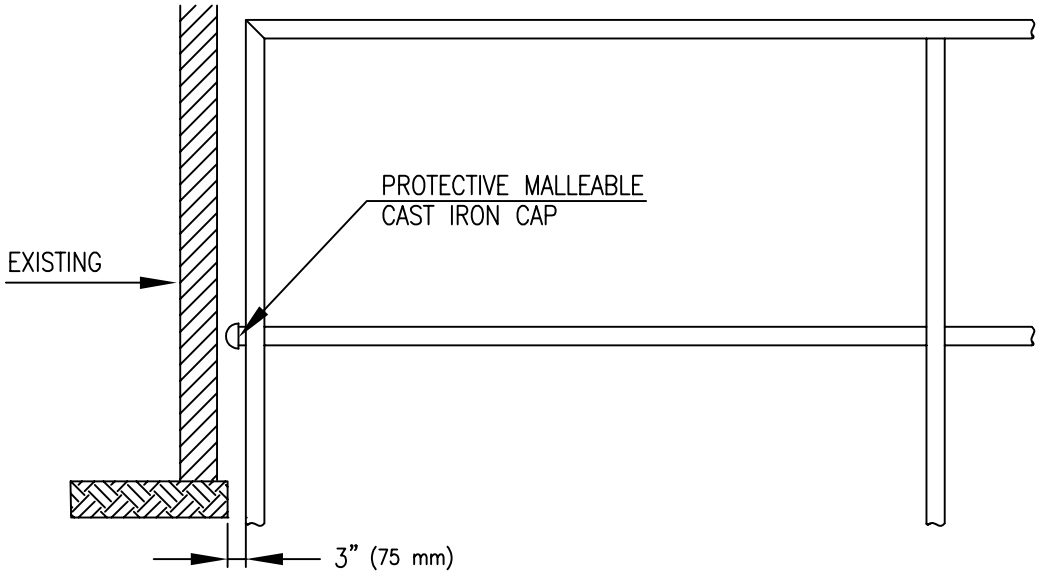

END TREATMENT 'B'

REFER TO SHEET 1 OF 2
FOR RAILING DETAILS

ISSUED:		STANDARD DETAIL		DETAIL NO.
6/91		BARRICADE RAILING		105
REVISED:				
7/02				SHEET 2 OF 2

10502B.DWG 08/02/00 09:13

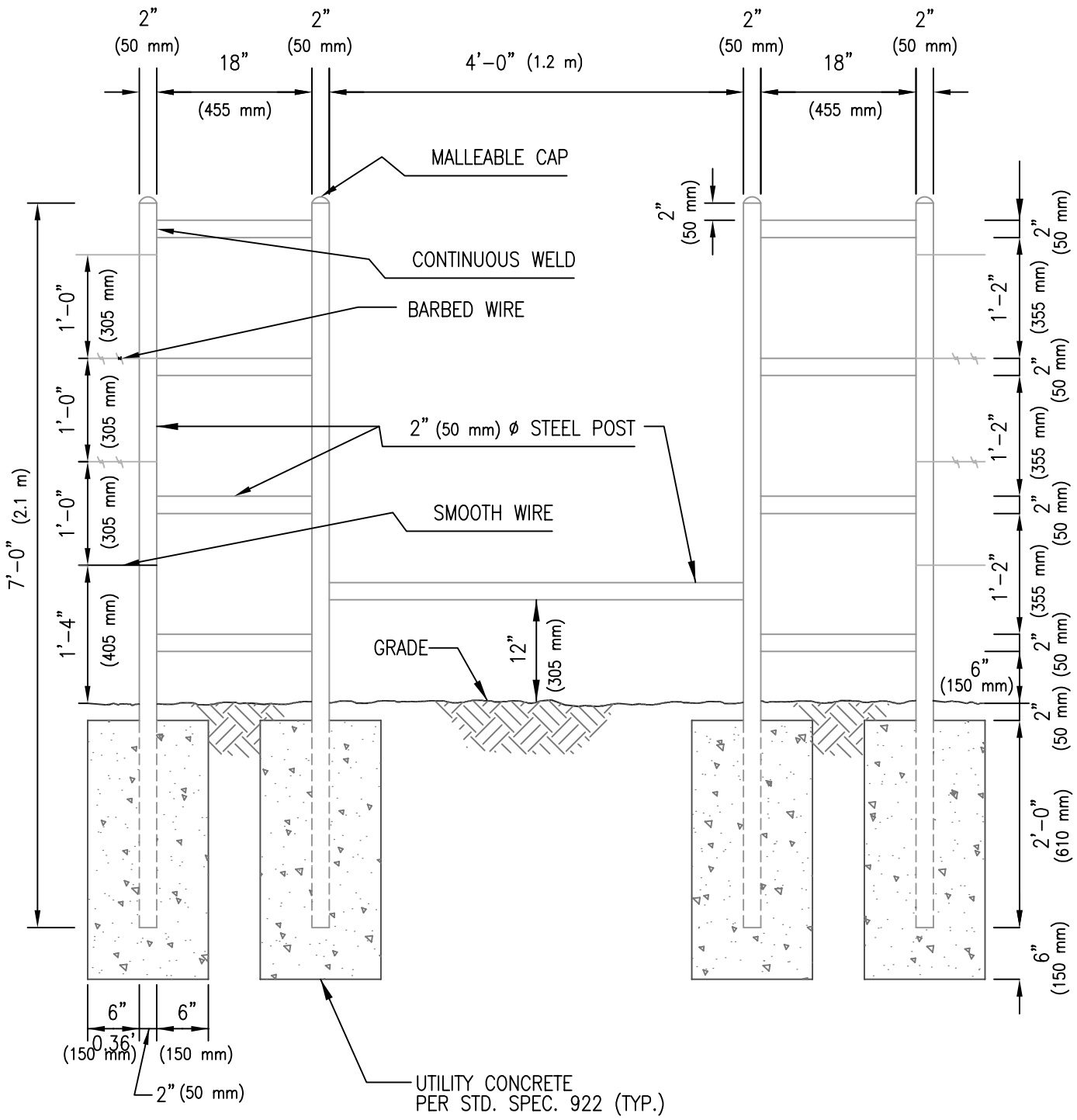

NOTE: DELETE BARBED WIRE WHEN BARRICADE RAILING (STANDARD DETAIL 105) IS USED.

ISSUED:		STANDARD DETAIL		DETAIL NO.
9/00		HORSE GATE		105.1
REVISED:				
7/02				SHEET 1 OF 1

10510B.DWG 08/03/00 15:48

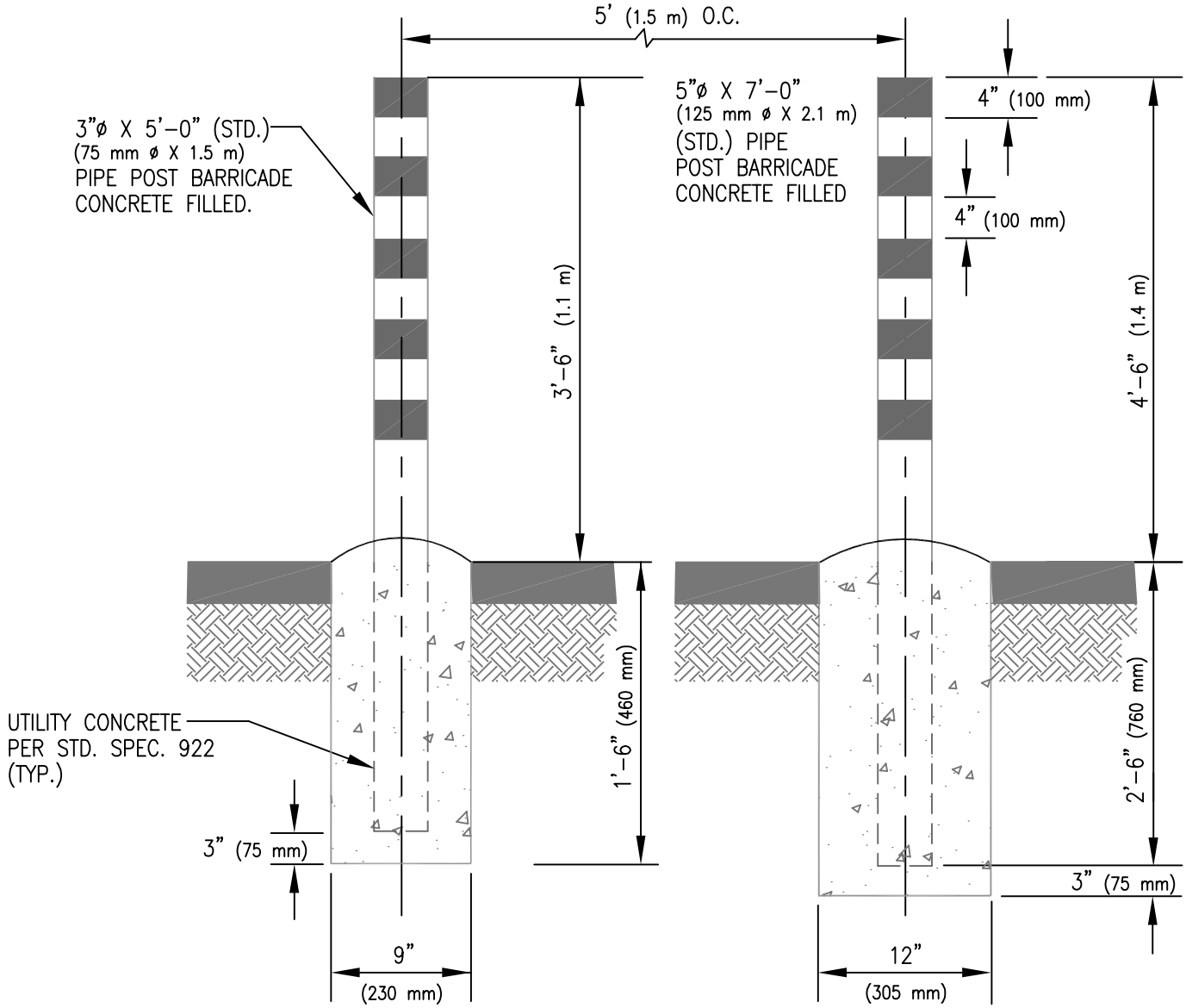

NOTE:

POST BARRICADES SHALL BE PAINTED WITH ONE PRIME COAT OF RED OXIDE (PAINT NO.1). ONE FINISH COAT OF DULL BLACK ENAMEL PER SECTION 1002 OF THE STANDARD SPECIFICATIONS AND STRIPES CONSISTING OF 4" (100 mm) BANDS OF YELLOW REFLECTORIZED TAPE SHALL BE USED UNLESS OTHERWISE SPECIFIED ON THE PLANS.

FINISH COLOR COMBINATIONS, OTHER THAN THAT SPECIFIED ABOVE, SHALL BE SUBMITTED TO THE AGENCY FOR APPROVAL.

ISSUED:		STANDARD DETAIL		DETAIL NO.
10/88	CITY OF TUCSON	POST BARRICADES	THE SEAL of PIMA COUNTY ARIZONA	106
REVISED: 7/02				SHEET 1 OF 1

106B.DWG 08/03/00 15:49

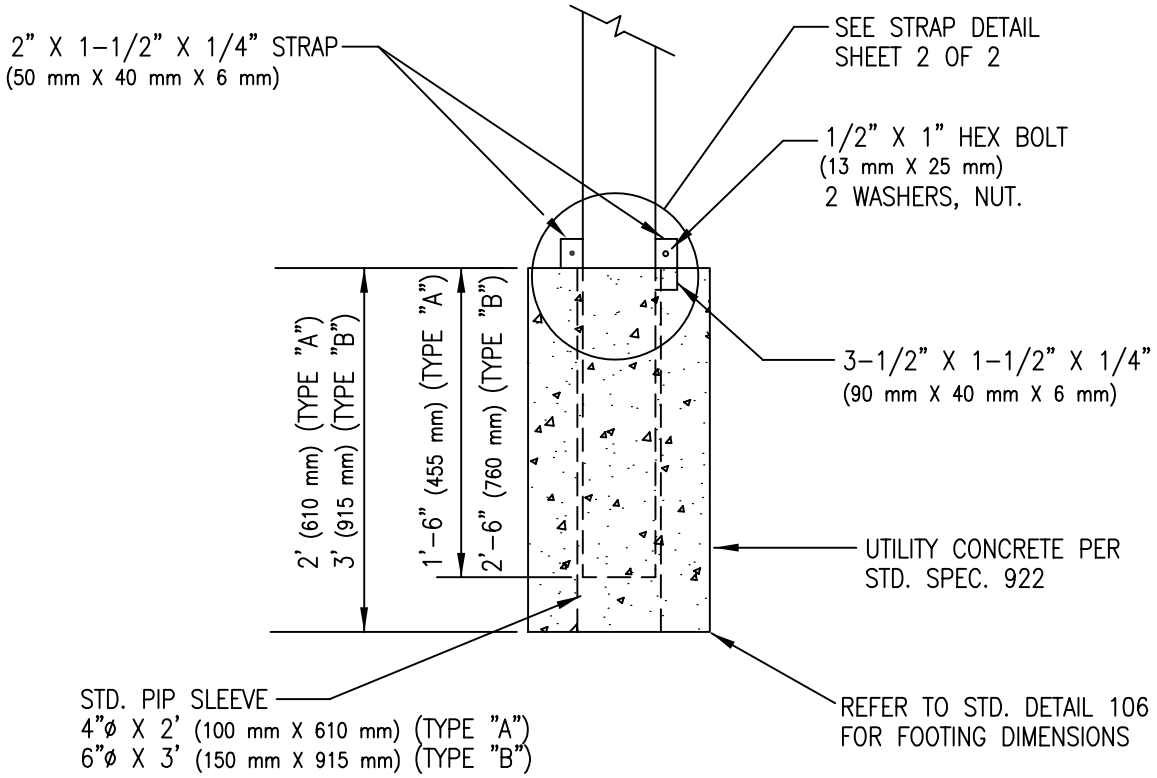

NOTES:

1. REMOVABLE POST BARRICADE SHALL NOT BE CONCRETE FILLED.
2. HAND TIGHTEN BOLT & NUT USING WASHERS EACH SIDE OF STRAPS. CUT BOLT APPROX. 1/8" (6 mm) FROM FACE OF NUT & PEEN EXPOSED END OF BOLT.
3. REFER TO STD. DETAIL 106 FOR POST DETAILS.

ISSUED:		STANDARD DETAIL		DETAIL NO.
10/88	CITY OF FOUNDED 1776 TUCSON	REMOVABLE POST BARRICADE	THE SEAL of PIMA COUNTY ARIZONA	107
REVISED:				
7/02				SHEET 1 OF 2

10701B.DWG 08/02/00 09:24

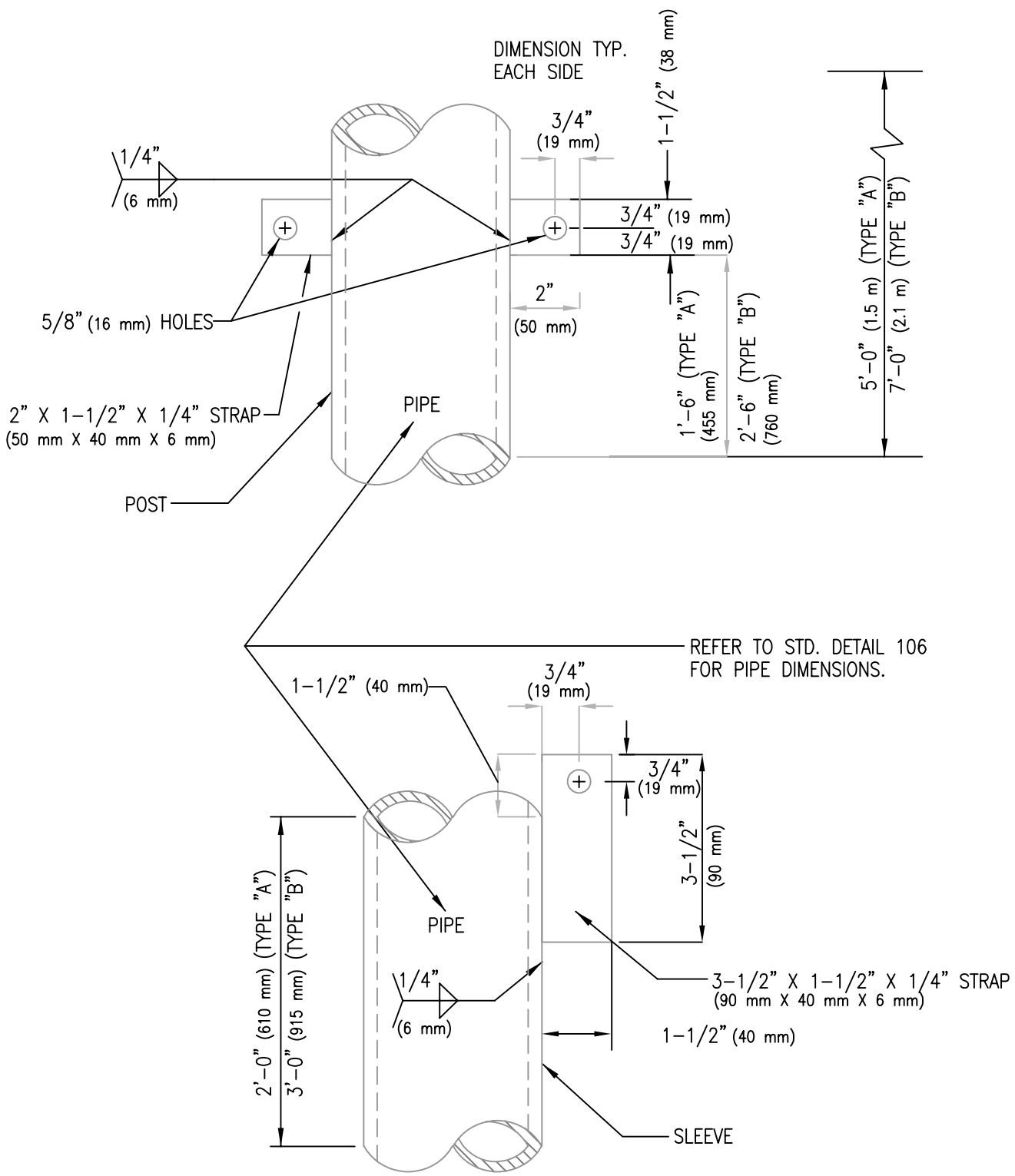

STRAP DETAIL

ISSUED:		STANDARD DETAIL		DETAIL NO.
10/88		REMOVABLE POST BARRICADE		107
REVISED:				
7/02				SHEET 2 OF 2

107028.DWG 08/02/00 09:27

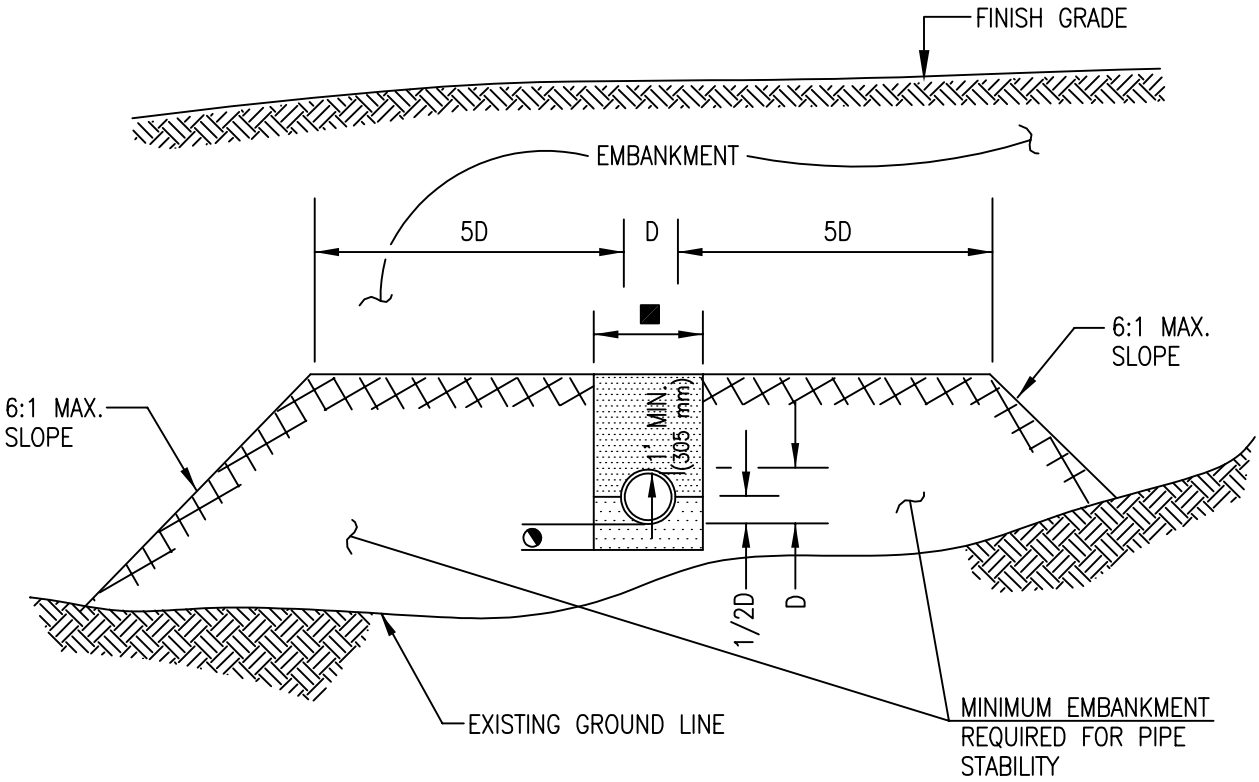

NON–TRENCH CONDITIONS

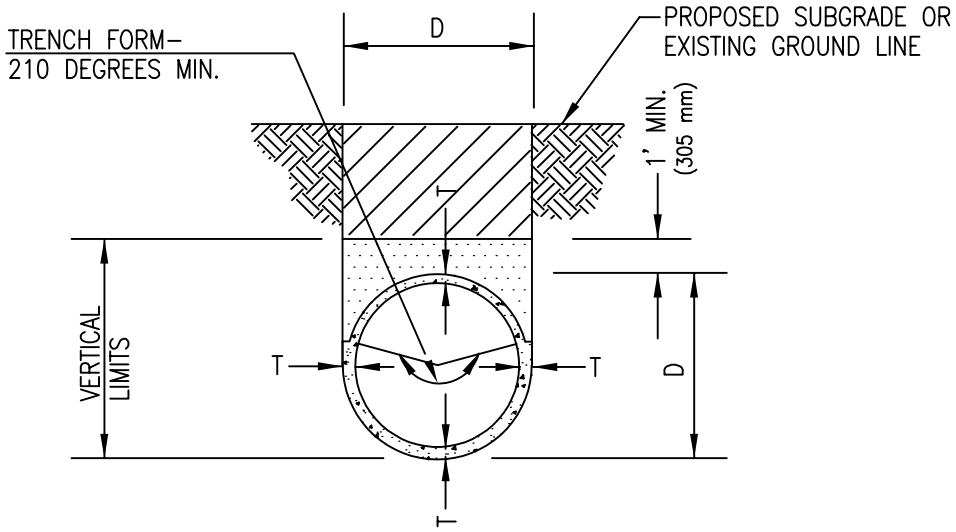

TRENCH CONDITIONS

NRCIPCP* IN NATURAL GROUND OR IN EMBANKMENT
*NRCIPCP=NON–REINFORCED CAST–IN–PLACE CONCRETE PIPE

REFER TO SHEET 3 OF 3 FOR NOTES AND SYMBOLS

ISSUED:		STANDARD DETAIL		DETAIL NO.
10/88	CITY OF TUCSON	PIPE BEDDING	THE SEAL of PIMA COUNTY ARIZONA	108
REVISED: 7/02				SHEET 1 OF 5

108018.DWG 07/26/00 17:10

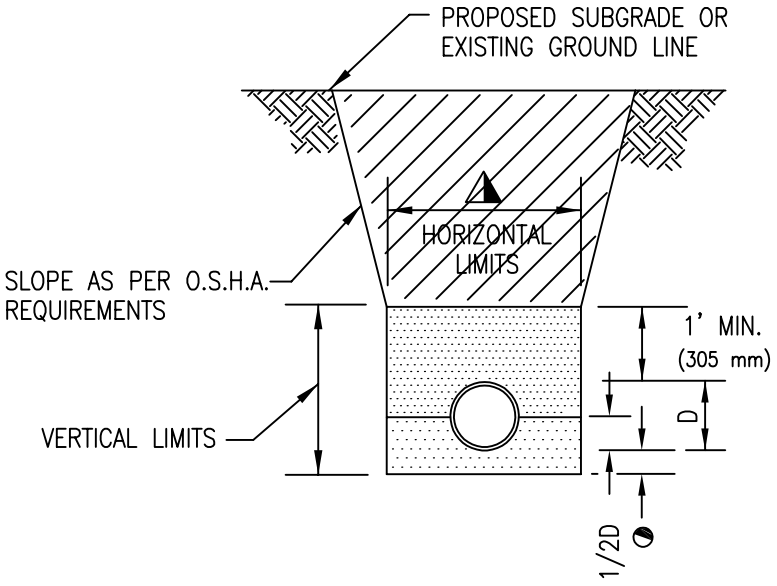

CASE 1: IN NATURAL GROUND OR EMBANKMENT

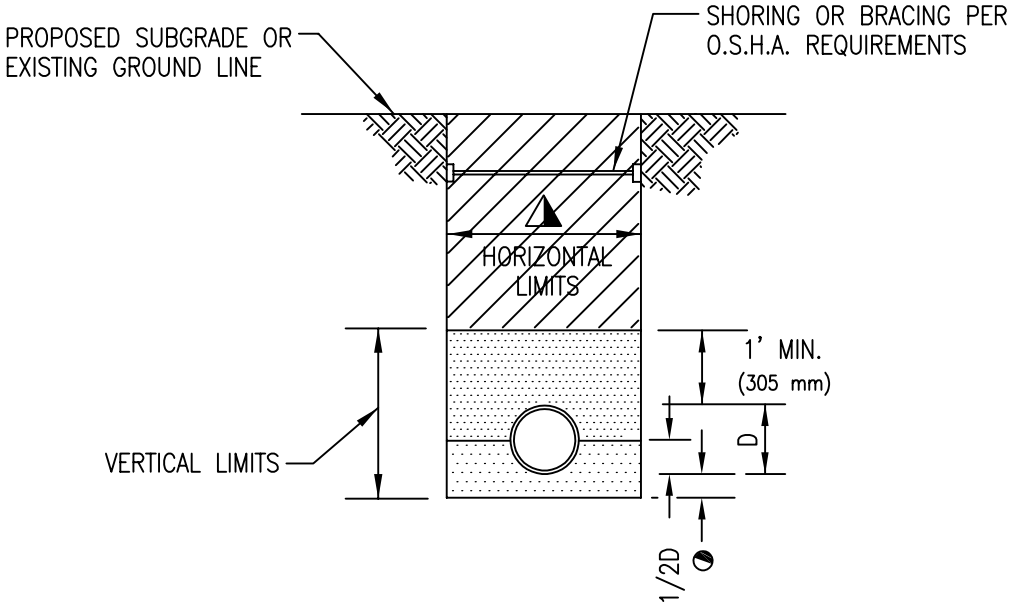

CASE 2: IN NATURAL GROUND OR EMBANKMENT

REFER TO SHEET 3 OF 5 FOR NOTES AND SYMBOLS

ISSUED:		STANDARD DETAIL		DETAIL NO.
10/88		PIPE BEDDING		108
REVISED:				
7/02				SHEET 2 OF 5

NOTES:

- PIPES SHALL BE INSTALLED EITHER IN A TRENCH CONDITION OR IN A NON–TRENCH CONDITION IN NATURAL GROUND OR IN AN EMBANKMENT.
- IN A TRENCH CONDITION, THE VERTICAL AND HORIZONTAL LIMITS SHALL BE MAINTAINED; OTHERWISE, A NON–TRENCH CONDITION EXISTS.
- BRACING AND SLOPING SHALL CONFORM TO O.S.H.A. REQUIREMENTS.
- BEDDING MATERIAL MAY BE USED FOR SHADING MATERIAL
- REFER TO STANDARD SPECIFICATION SECTION 501 FOR GRADATION AND COMPACTION REQUIREMENTS.

D OUTSIDE DIAMETER OF FULL CIRCLE PIPE OR OUTSIDE DIMENSION (SPAN OR RISE) OF ARCH, ARCH PIPE, OR ELLIPTICAL PIPE.

T MINIMUM WALL THICKNESS FOR NRCIPCP, AS PER PROJECT PLANS.

■ D+5 FEET (1.5 m) MAX. D+2 FEET (610 mm) MIN. FOR DIAMETERS UP TO 4 FEET AND (1.2 m) D+3 FEET (915 mm) MIN. FOR DIAMETERS 4 FEET (1.2 m) AND OVER.

◔ 6 INCHES (150 mm) EXCEPT WHEN ON UNYIELDING OR UNSTABLE MATERIAL, THEN AS (915 mm) PER STANDARD SPECIFICATION 501.

TRENCH WIDTH ◭ FOR SINGLE PIPE INSTALLATION

PIPE SIZE (I.D.)	MAXIMUM	MINIMUM
<18" (450mm)	D+32" (D+810mm)	D+12" (D+300mm)
18" TO 24 " (450–610mm)	D+38" (D+960mm)	D+15" (D+375mm)
27" TO 39" (685–985mm)	D+44" (D+1110mm)	D+18" (D+450mm)
42" TO 60" (1060–1520mm)	D+1/2 D	D+24" (D+610mm)
66" TO 72" (1670–1830mm)	D+72" (D+1830mm)	D+24" (D+610mm)
>72" (1830mm)	D+72" (D+1830mm)	D+24" (D+610mm)

MINIMUM TRENCH WIDTHS SHALL BE USED FOR CONTROLLED LOW STRENGTH MATERIAL (CLSM) AND OTHER 'FLOWABLE' BACKFILL MATERIALS. FOR SOILS REQUIRING MECHANICAL COMPACTION THE TRENCH WIDTH SHALL BE WIDE ENOUGH TO ACCOMODATE THE COMPACTION EQUIPMENT BETWEEN THE PIPE SPRINGLINE AND THE TRENCH SIDEWALL.

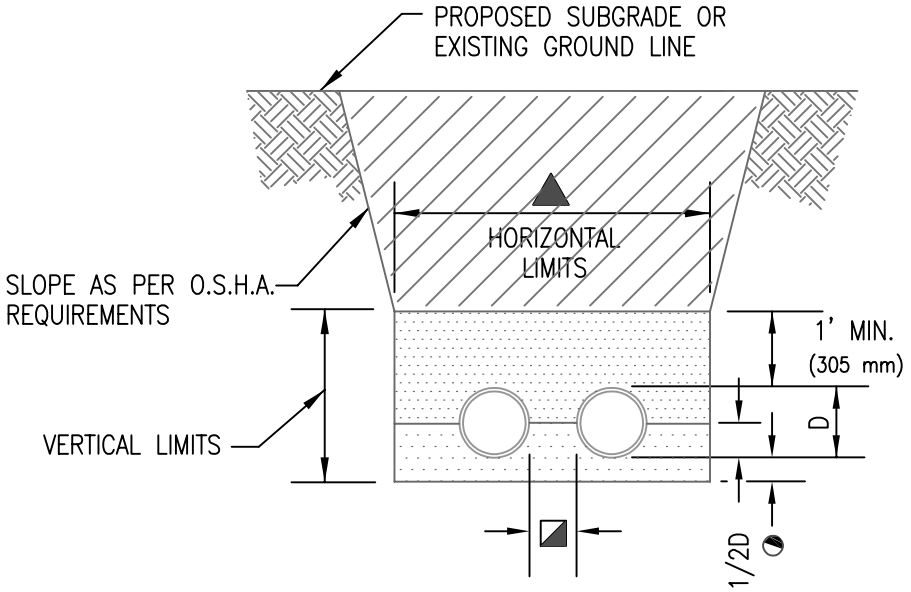

CASE 1: IN NATURAL GROUND OR EMBANKMENT

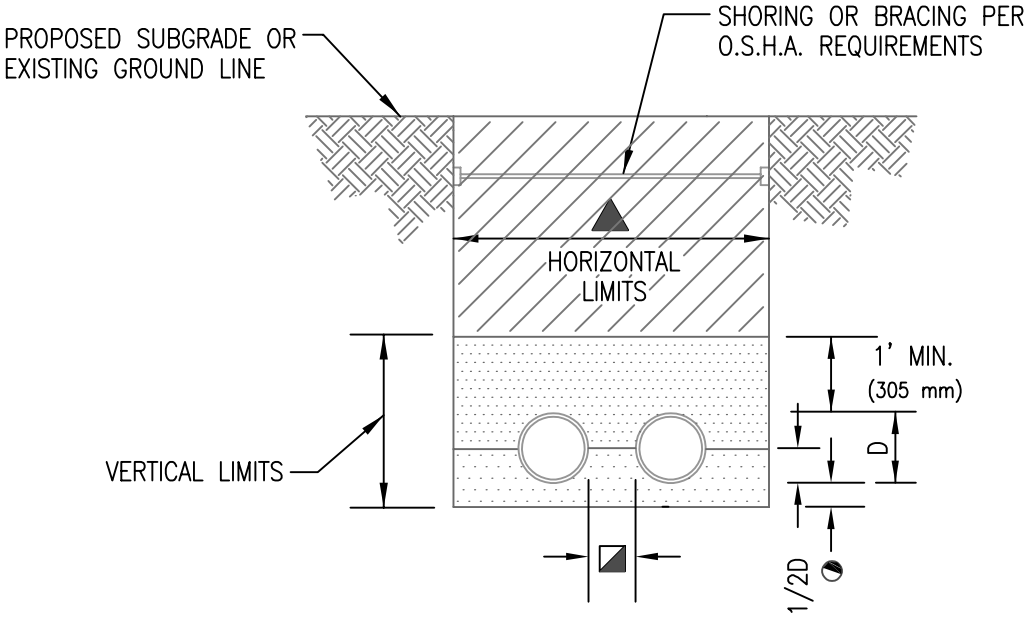

CASE 2: IN NATURAL GROUND OR EMBANKMENT

REFER TO SHEET 3 OF 5 & 5 OF 5FOR NOTES AND SYMBOLS

ISSUED:		STANDARD DETAIL		DETAIL NO.
10/88		PARALLEL PIPE BEDDING		108
REVISED: 7/02				SHEET 4 OF 5

10802B.DWG 07/26/00 17:11

NOTES:

PIPE SIZE (I.D.)	TRENCH WIDTH ▲ FOR PARALLEL PIPE INSTALLATION MAXIMUM	MINIMUM	MINIMUM SPACING BETWEEN PARALLEL PIPES ◪
<18" (450mm)	D+32" (D+810mm)	D+12" (D+300mm)	1' (300mm)
18" TO 24 " (450–610mm)	D+38" (D+960mm)	D+15" (D+375mm)	1' (300mm)
27" TO 39" (685–985mm)	D+44" (D+1110mm)	D+18" (D+450mm)	I.D./2
42" TO 60" (1060–1520mm)	D+1/2 D	D+24" (D+610mm)	I.D./2
66" TO 72" (1670–1830mm)	D+72" (D+1830mm)	D+24" (D+610mm)	I.D./2
>72" (1830mm)	D+72" (D+1830mm)	D+24" (D+610mm)	36" (910mm)

MINIMUM TRENCH WIDTHS SHALL BE USED FOR CONTROLLED LOW STRENGTH MATERIAL (CLSM) AND OTHER 'FLOWABLE' BACKFILL MATERIALS. FOR SOILS REQUIRING MECHANICAL COMPACTION THE TRENCH WIDTH SHALL BE WIDE ENOUGH TO ACCOMODATE THE COMPACTION EQUIPMENT BETWEEN THE PIPE SPRINGLINE AND THE TRENCH SIDEWALL.

NON–TRENCH CONDITION EMBANKMENT

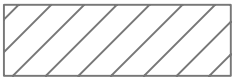

TRENCH BACKFILL (STD. SPEC. 501–3.04 (A)(2))

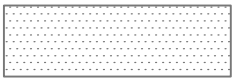

SHADING MATERIAL (STD. SPEC. 501–3.04 (A)(1))

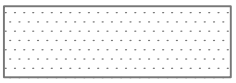

BEDDING MATERIAL (STD. SPEC. 501–3.02 (A))

ISSUED:		STANDARD DETAIL		DETAIL NO.
10/88	CITY OF TUCSON FOUNDED 1776	PIPE BEDDING (NOTES)	THE SEAL of PIMA COUNTY ARIZONA	108
REVISED: 7/02				SHEET 5 OF 5

108038.DWG 08/02/00 09:29

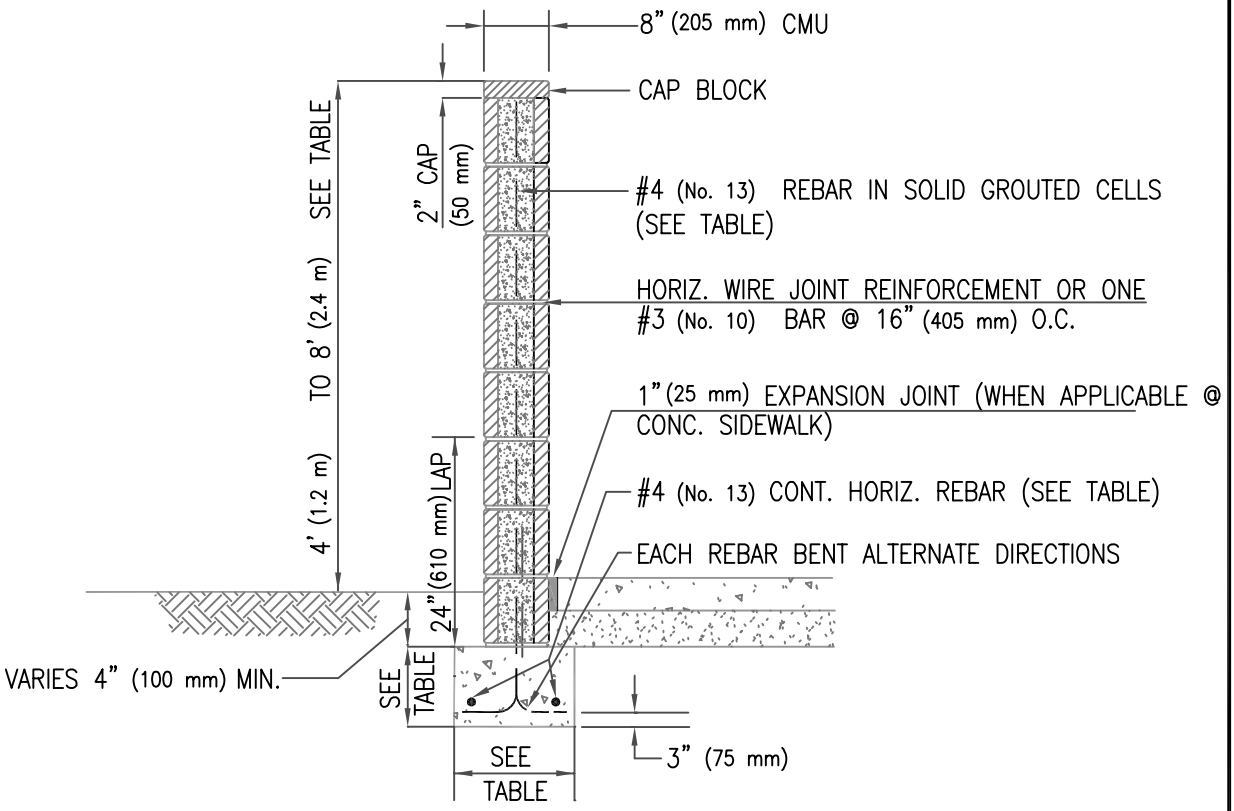

NOTES

FOOTING TO BE IN UNDISTURBED SOIL OR IN COMPACTED SOIL @ 95%

CONCRETE TO BE 2500 PSI (17.2 MPa) (MIN.)

REBAR TO BE GRADE 40

8" (205 mm) CMU TO BE fm = 1350 PSI (9.3 MPa)

COLOR AND TEXTURE OF BLOCK TO BE AS SPECIFIED ON PLANS.

DESIGN WIND PRESSURE IS 15psf (718 Pa) AND SOIL PRESSURE 1000 psi (6.9 MPa) MORTER/GROUT, TYPE S Fm = 1800 psi (12.4 MPa)

WALL HEIGHT (MAX.)	VERT. BAR SPACING	FOOTING WIDTH	FOOTING DEPTH	FOOTING HORIZ. BAR
4'–0" (1.2 m)	48" (1.2 m)	14" (355 mm)	8" (205 mm)	2 #4 (No. 13)
4'–8" (1.4 m)	48" (1.2 m)	16" (405 mm)	10" (255 mm)	2 #4 (No. 13)
5'–4" (1.6 m)	48" (1.2 m)	18" (460 mm)	12" (305 mm)	2 #4 (No. 13)
6'–0" (1.8 m)	48" (1.2 m)	20" (510 mm)	12" (305mm)	3 #4 (No. 13)
6'–8" (2.0 m)	32" (810 mm)	22" (550 mm)	12" (305 mm)	3 #4 (No. 13)
7'–4" (2.2 m)	32" (810 mm)	24" (610 mm)	12" (305 mm)	3 #4 (No. 13)
8'–0" (2.4 m)	32" (810 mm)	26" (660 mm)	15 (380 mm)	4 #4 (No. 13)

ISSUED:	STANDARD DETAIL	DETAIL NO.
10/88	SCREENWALL	109
REVISED: 7/02		SHEET 1 OF 1

109B.DWG 08/02/00 10:54

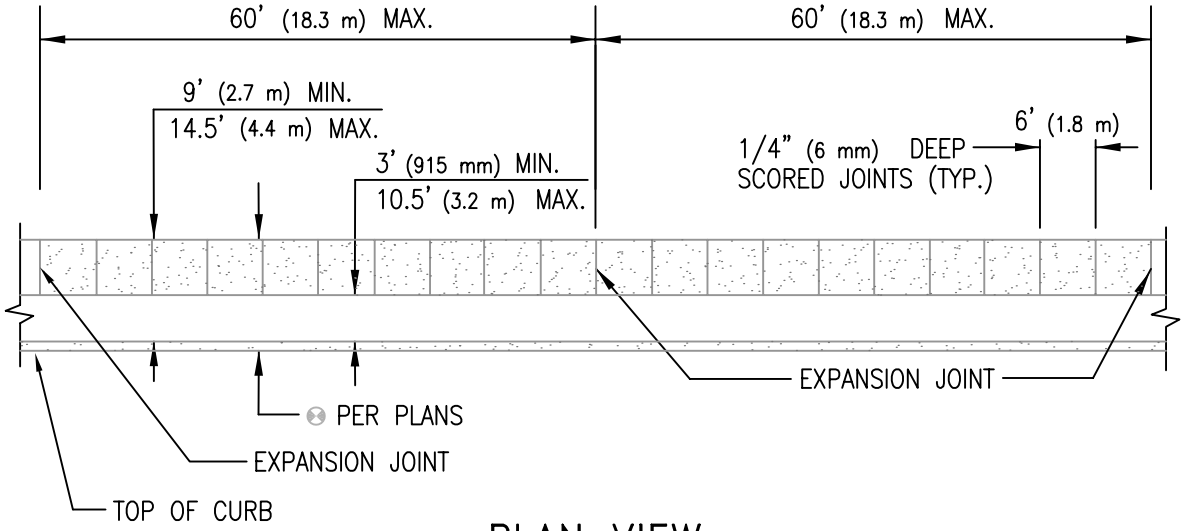

PLAN VIEW

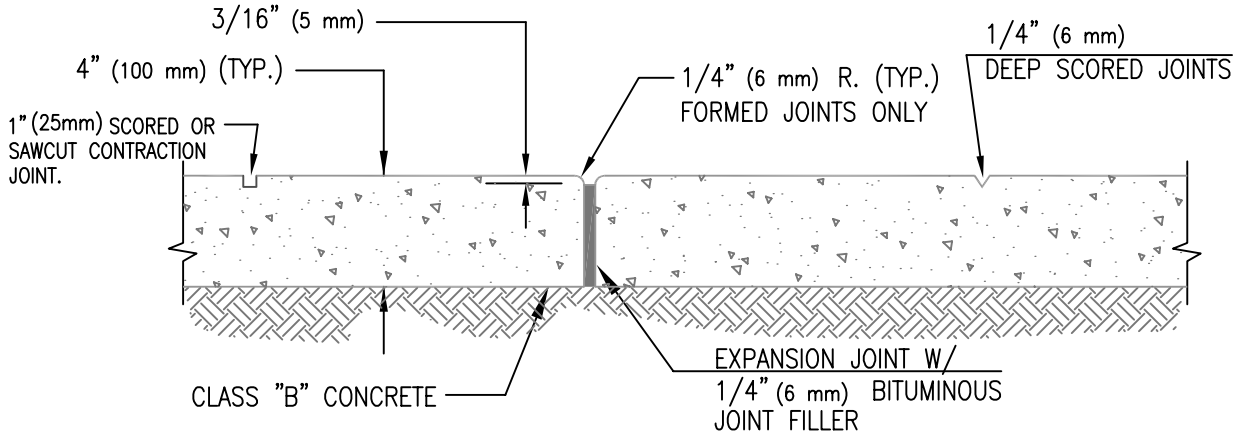

EXPANSION AND SCORED JOINT DETAIL

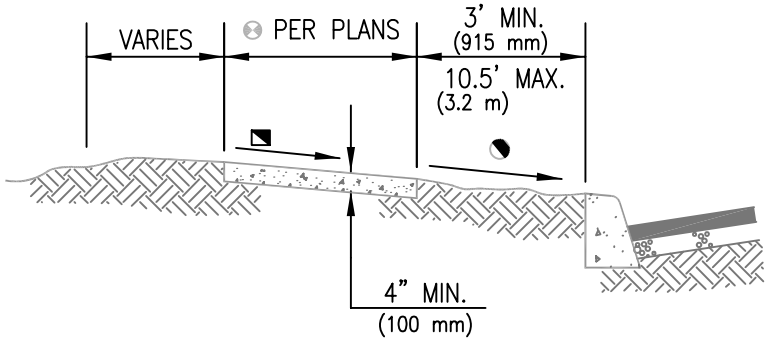

1% MIN.
2% MAX.

1% MIN.
2% MAX.

TYPICAL SECTION

4' (1.2 m) MINIMUM SIDEWALK WIDTH. SCORED JOINT SPACING AT 4' (1.2 m)
5' (1.5 m) WHEN EDGE OF SIDEWALK ABUTS BACK FACE OF CURB. SCORED JOINT SPACING AT 5' (1.5 m)
6' (1.8 m) DESIRABLE WITHIN ARTERIAL AND COLLECTOR STREET RIGHTS-OF-WAY. SCORED JOINT SPACING AT 6' (1.8 m)

ISSUED:		STANDARD DETAIL		DETAIL NO.
10/88	CITY OF TUCSON FOUNDED 1776	CONCRETE SIDEWALK	THE SEAL of PIMA COUNTY ARIZONA	200
REVISED: 7/02				SHEET 1 OF 2

20001B.DWG 08/03/00 15:49

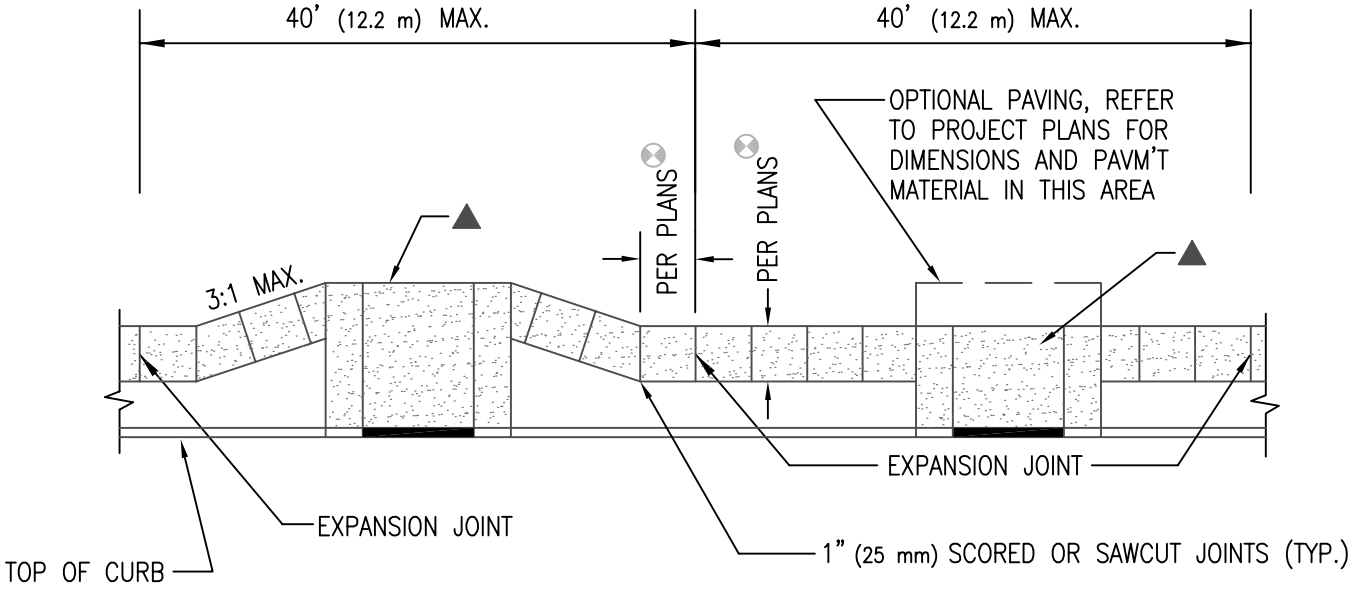

PLAN VIEW

▲ DRIVEWAY APRON PER STD. DET. 206

NOTES:
1. EXPANSION JOINTS SHALL BE LOCATED WHERE SIDEWALK ABUTS CONCRETE DRIVEWAYS, CURB OR OTHER ADJACENT STRUCTURES.
2. ONE–HALF INCH (13 mm) BITUMINOUS JOINT FILLER SHALL BE INSTALLED AT EXPANSION JOINT LOCATIONS AND SHALL EXTEND THE FULL DEPTH OF THE CONCRETE.
3. ONE–INCH (25 mm) DEEP CONTRACTION JOINTS SHALL BE PLACED AT INTERVALS OF APPROXIMATELY 15 FEET OR AT A SPACING THAT MATCHES THE ADJACENT CURB.
4. FORMED CONTRACTION JOINTS SHALL BE FINISHED WITH A TOOL HAVING A 1/4" INCH (6 mm) RADIUS.
5. SCORED JOINTS SHALL BE 1/4" (6 mm) DEEP AND PLACED AT THE SPACING INDICATED FOR THE WIDTH OF SIDEWALK OR MATCH SCORED JOINTS OF ADJACENT CURB.
6. CONCRETE SHALL BE FINISHED BY MEANS OF A FLOAT, STEEL TROWELLED AND BROOMED WITH A FINE BRUSH IN A TRANSVERSE DIRECTION.

ISSUED:		STANDARD DETAIL		DETAIL NO.
10/88	CITY OF TUCSON FOUNDED 1776	CONCRETE SIDEWALK	THE SEAL of PIMA COUNTY ARIZONA	200
REVISED: 7/02				SHEET 2 OF 2

200028.DWG 08/02/00 09:57

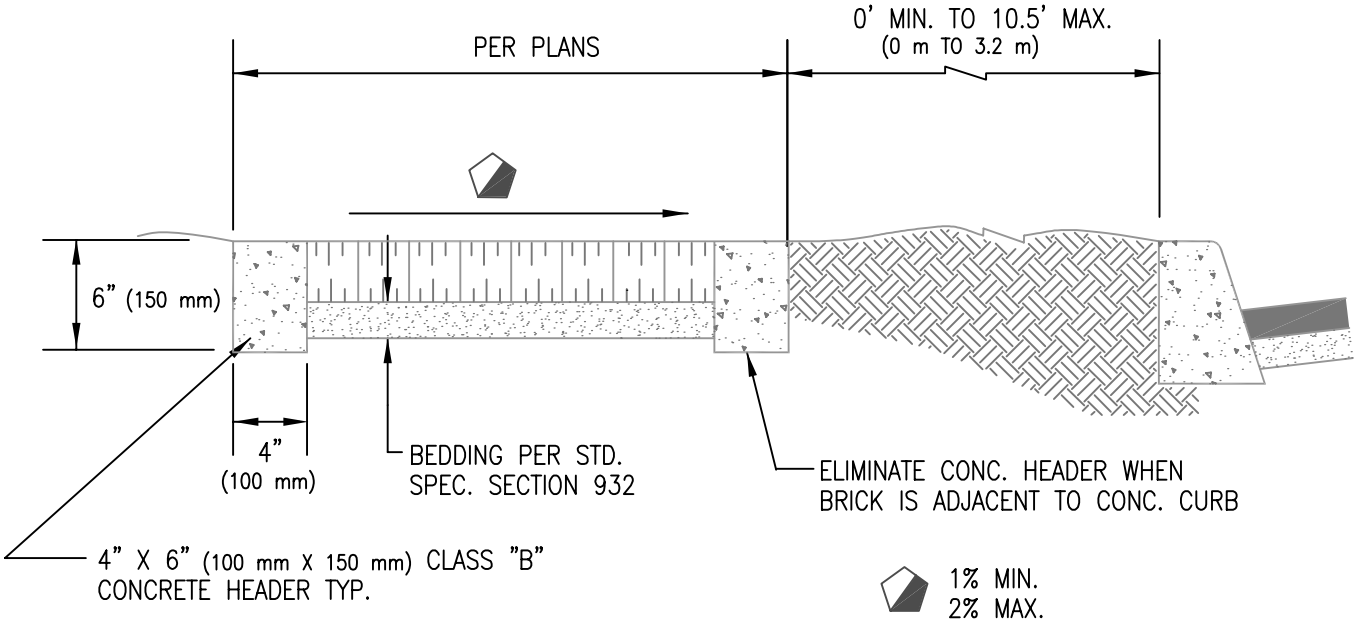

TYPICAL SECTION

NOTE:

THE BRICK PATTERN SHALL BE AS SPECIFIED ON THE PROJECT PLANS OR IN THE SPECIAL PROVISIONS.

ISSUED:		STANDARD DETAIL		DETAIL NO.
10/88		BRICK SIDEWALK		201
REVISED:				
7/02				SHEET 1 OF 1

201B.DWG 08/02/00 10:00

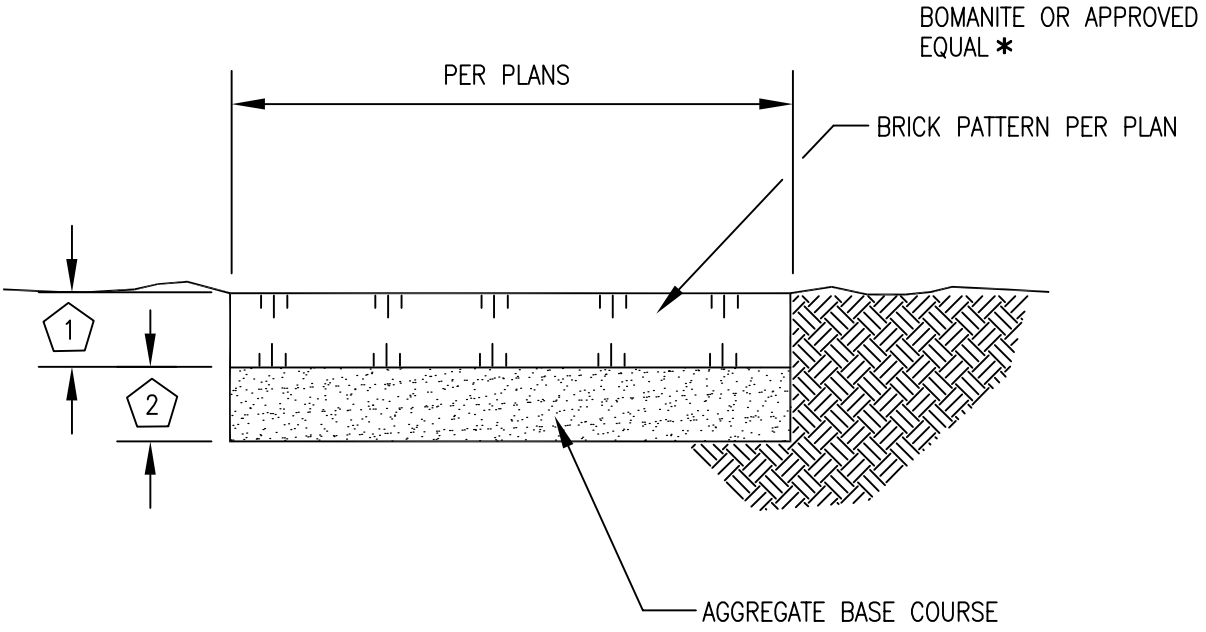

TYPICAL SECTION

* NOTE:

1/2" (13 mm) BITUMINOUS JOINT FILLER SHALL BE PLACED AT A MAX. SPACING OF 40' (12.2 m) AND TO FULL DEPTH OF CONCRETE

(1) 4" (100 mm) FOR SIDEWALK AREAS. 6" (150 mm) FOR CROSSWALKS IN PARKING AREAS, RESIDENTIAL STREETS, LOCAL STREETS, ACROSS DRIVEWAYS. 8" (205 mm) WHEN USED IN COLLECTOR AND ARTERIAL STREETS.

(2) A.B.C. IS OPTIONAL WHEN NOT SUBJECT TO VEHICULAR TRAFFIC. THICKNESS OF A.B.C. SHALL BE PER THE PROJECT PLANS.

ISSUED:		STANDARD DETAIL		DETAIL NO.
10/88		DECORATIVE CONC. SIDEWALK/ WALKWAY		202
REVISED: 7/02				SHEET 1 OF 1

202B.DWG 08/02/00 10:01

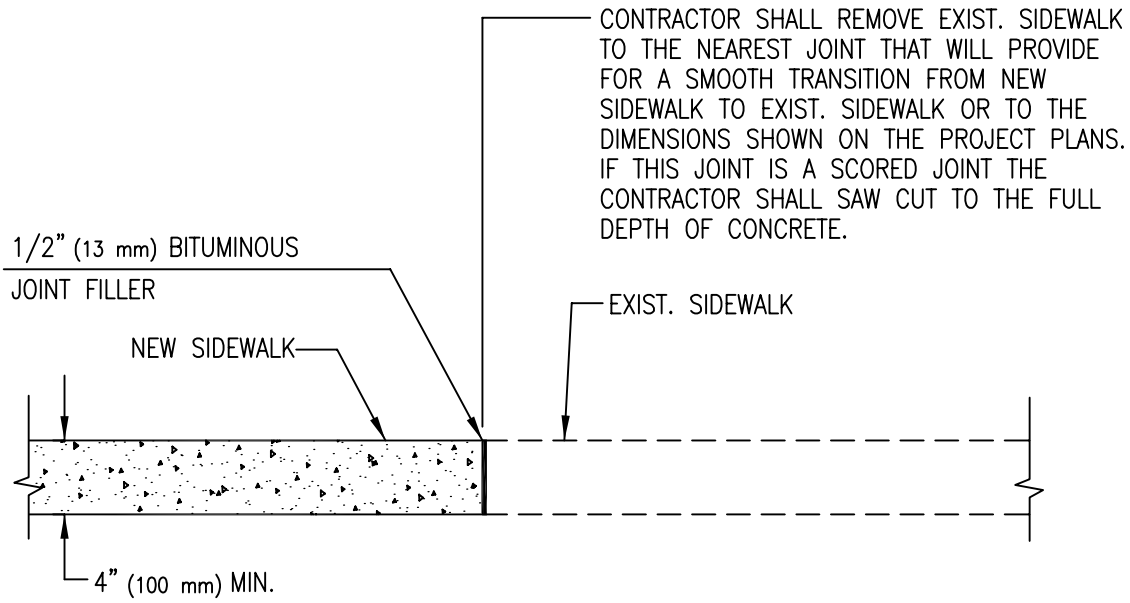

ISSUED:		STANDARD DETAIL		DETAIL NO.
10/88	CITY OF TUCSON FOUNDED 1776	CONCRETE SIDEWALK NEW TO EXIST. CONNECTION	THE SEAL of PIMA COUNTY ARIZONA	203
REVISED: 7/02				SHEET 1 OF 1

203B.DWG 08/02/00 10:03

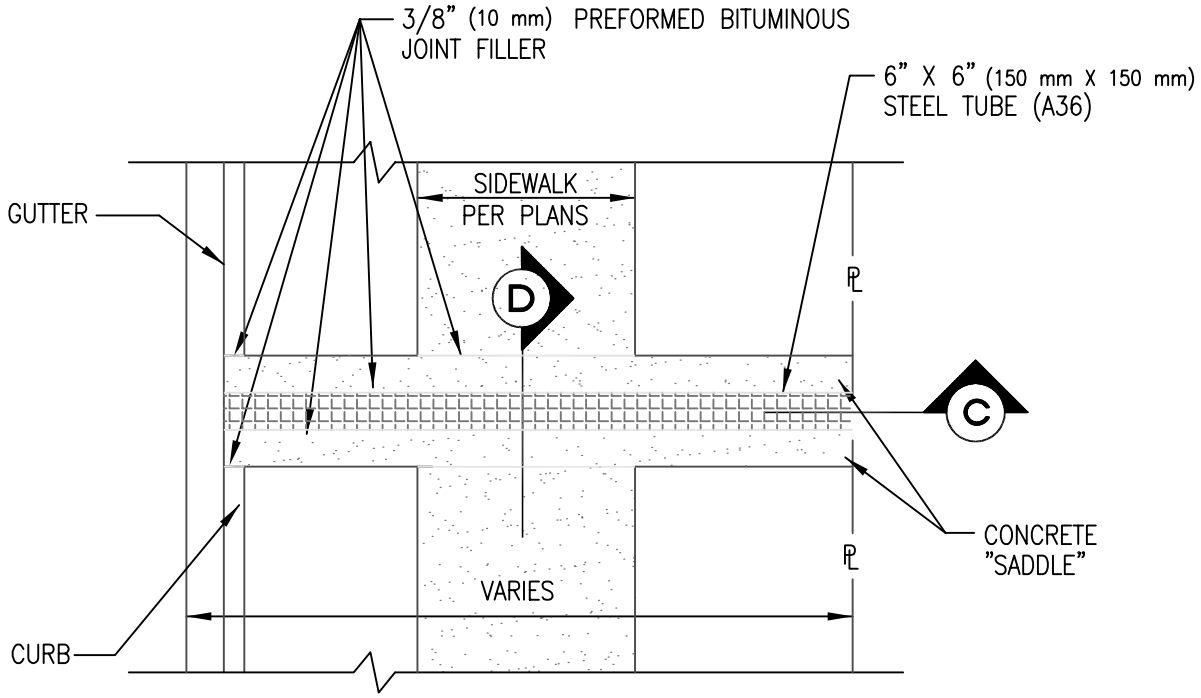

PLAN

REFER TO SHEET 2 OF 2 FOR SECTIONS

NOTE:

- EXISTING CURB AND/OR SIDEWALK SHALL BE SAW CUT TO ITS FULL DEPTH, REMOVED AND DISPOSED OF AS PART OF SIDEWALK SCUPPER INSTALLATION.

ISSUED:		STANDARD DETAIL		DETAIL NO.
10/88		SIDEWALK SCUPPER TYPE 1		204
REVISED: 7/02				SHEET 1 OF 2

204018.DWG 08/03/00 15:50

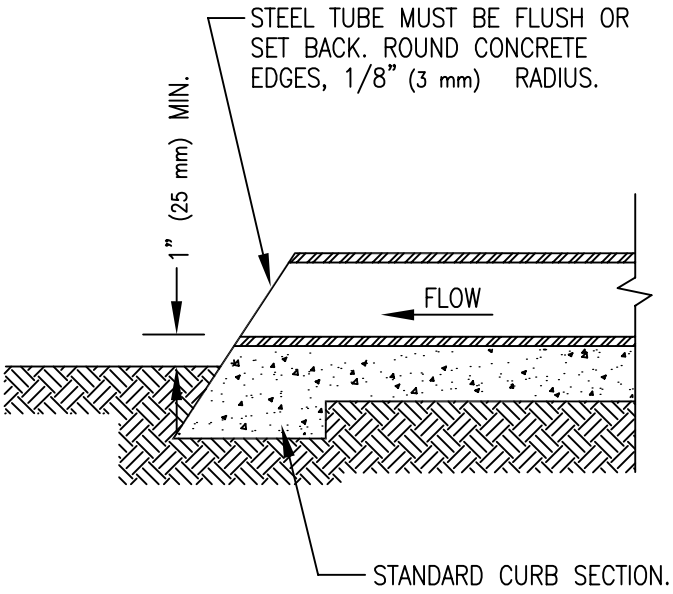

C SECTION

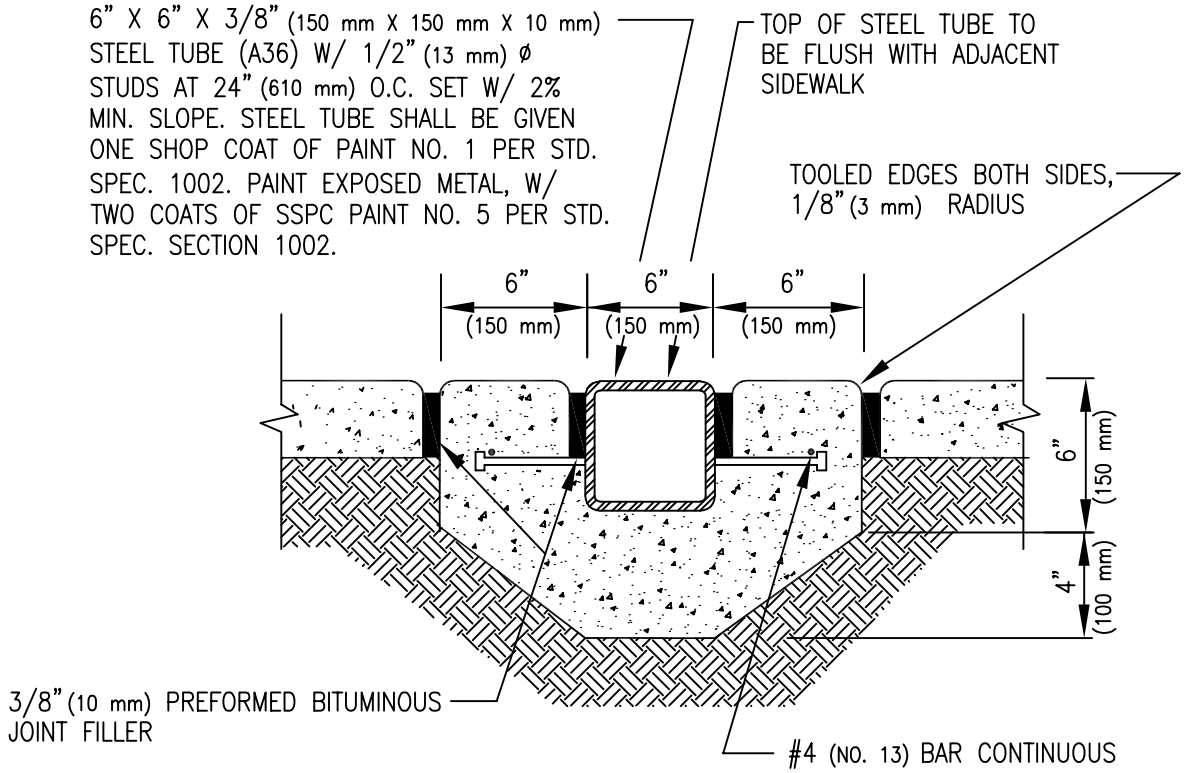

D SECTION

ISSUED:		STANDARD DETAIL		DETAIL NO.
10/88	CITY OF TUCSON FOUNDED 1776	SIDEWALK SCUPPER TYPE 1	THE SEAL of PIMA COUNTY ARIZONA	204
REVISED: 7/02				SHEET 2 OF 2

204028.DWG 08/02/00 10:56

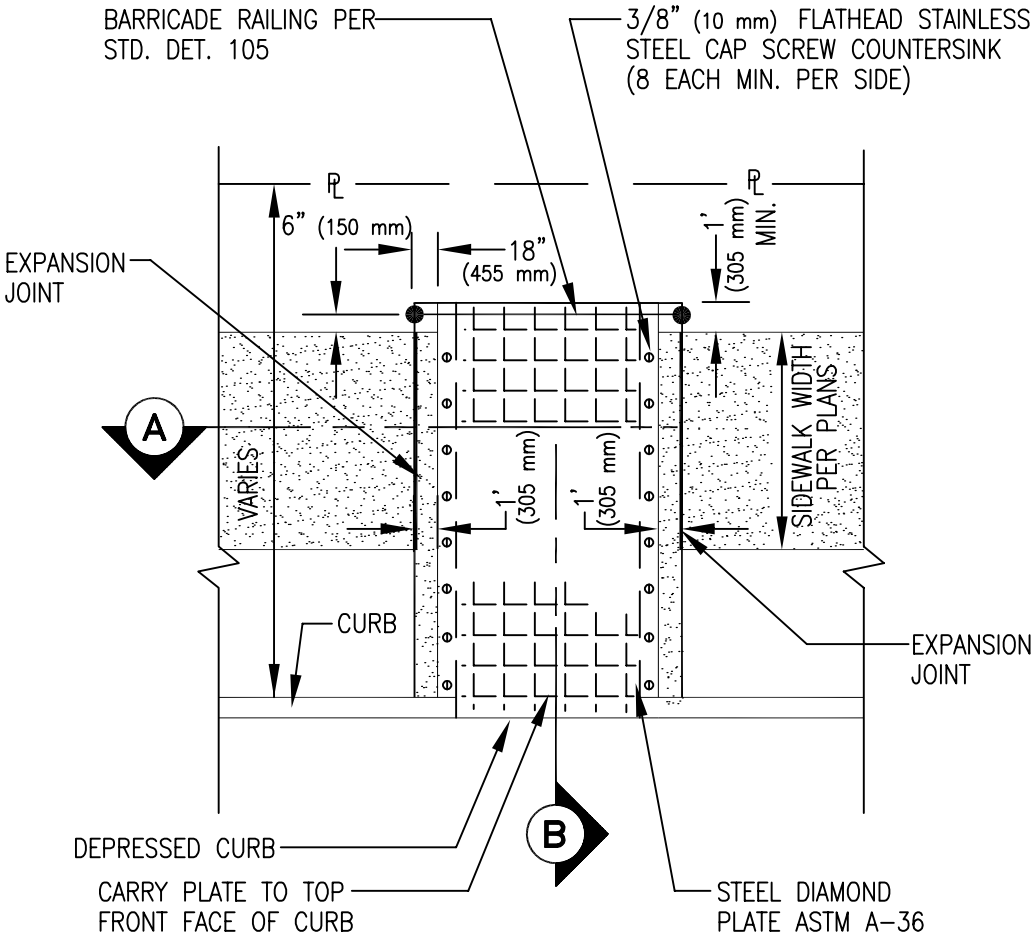

PLAN VIEW

ISSUED:		STANDARD DETAIL		DETAIL NO.
10/88		SIDEWALK SCUPPER TYPE 2		205
REVISED: 7/02				SHEET 1 OF 3

205018.DWG 06/02/00 10:07

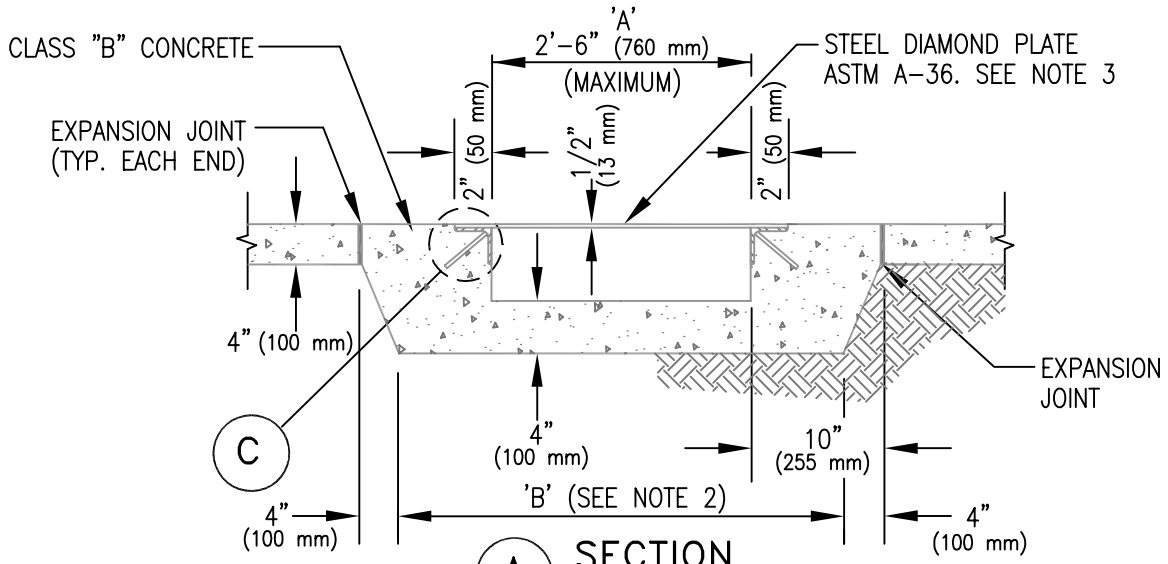

A SECTION

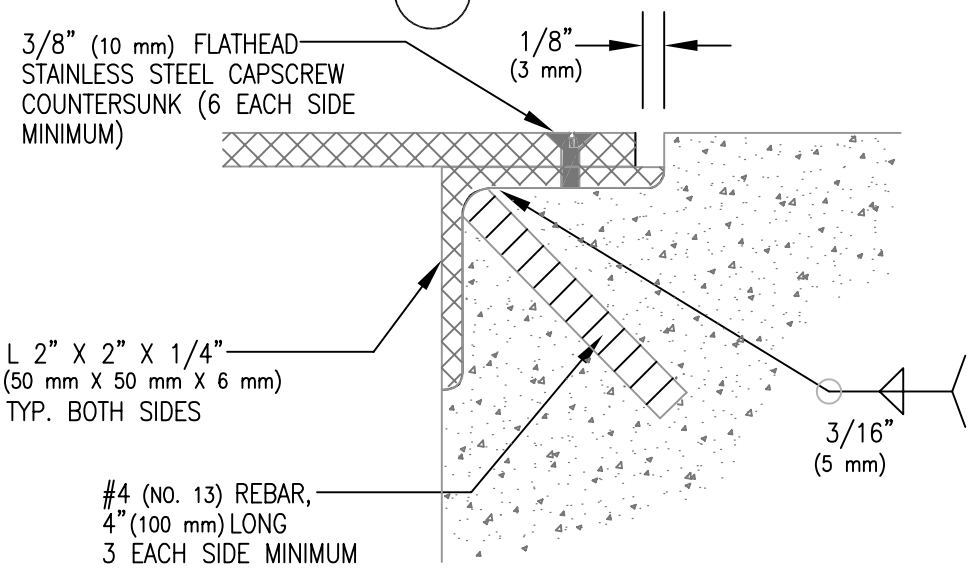

C DETAIL

NOTES:

1. (⟶) INDICATES DIRECTION OF FLOW.

2. DIMENSION 'B' EQUALS 'A'+1' (305 mm).

3. STEEL DIAMOND PLATE SHALL BE GIVEN ONE SHOP COAT OF PAINT NO.1 PER STD. SPEC. SECTION 1002. EXPOSED METAL SHALL BE PAINTED WITH TWO COATS OF SSPC PAINT NO. 5 PER STD. SPEC. SECTION 1002.

4. H EQUALS CURB FACE HEIGHT.

5. FOR CURB AND GUTTER, USE 2' (610 mm) TRANSITIONS TO VERTICAL CURB.

6. FOR MULTIPLE SCUPPERS PROVIDE 4" (100 mm) BETWEEN ADJACENT PANELS OF STEEL DIAMOND PLATE. INTERMEDIATE POSTS FOR BARRICADE RAILINGS SHALL BE PLACED MIDWAY IN 4" (100 mm) AREA BETWEEN ADJACENT PANELS.

7. STEEL DIAMOND PLATE SHALL BE DELIVERED AS ONE PIECE, CONFORMING TO THE REQUIRED SCUPPER DIMENSIONS. PLATES SHALL NOT BE SPLICED.

ISSUED:		STANDARD DETAIL		DETAIL NO.
10/88	CITY OF TUCSON FOUNDED 1776	SIDEWALK SCUPPER TYPE 2	THE SEAL of PIMA COUNTY ARIZONA	205
REVISED: 7/02				SHEET 2 OF 3

20502B.DWG 08/02/00 10:57

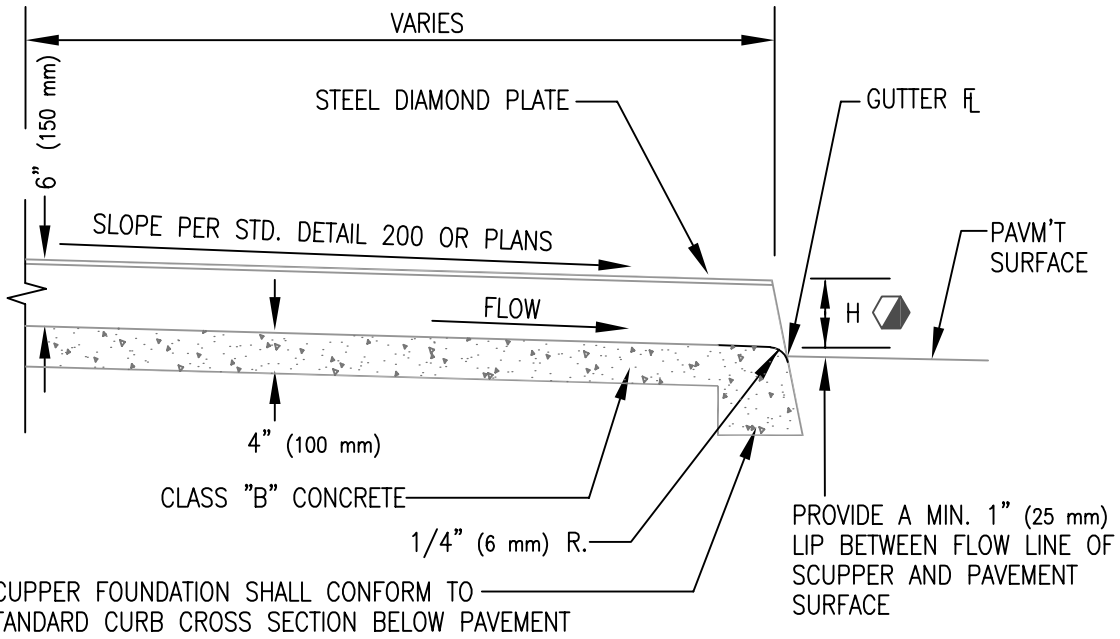

B SECTION

"H" DIMENSION TO BE NOTED ON PLANS OR ESTABLISHED IN THE FIELD

ISSUED:		STANDARD DETAIL		DETAIL NO.
10/88		SIDEWALK SCUPPER TYPE 2		205
REVISED: 7/02				SHEET 3 OF 3

20503B.DWG 08/02/00 10:11

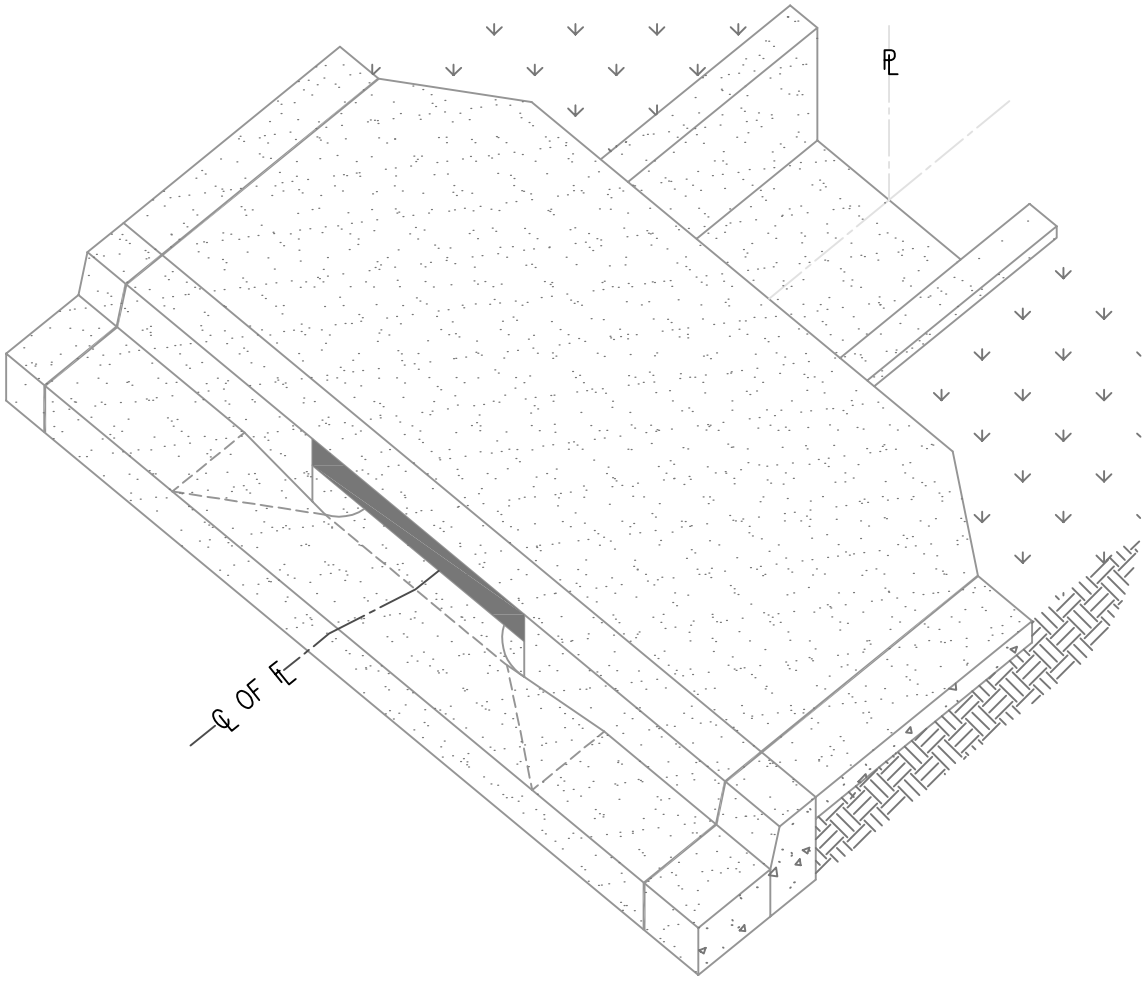

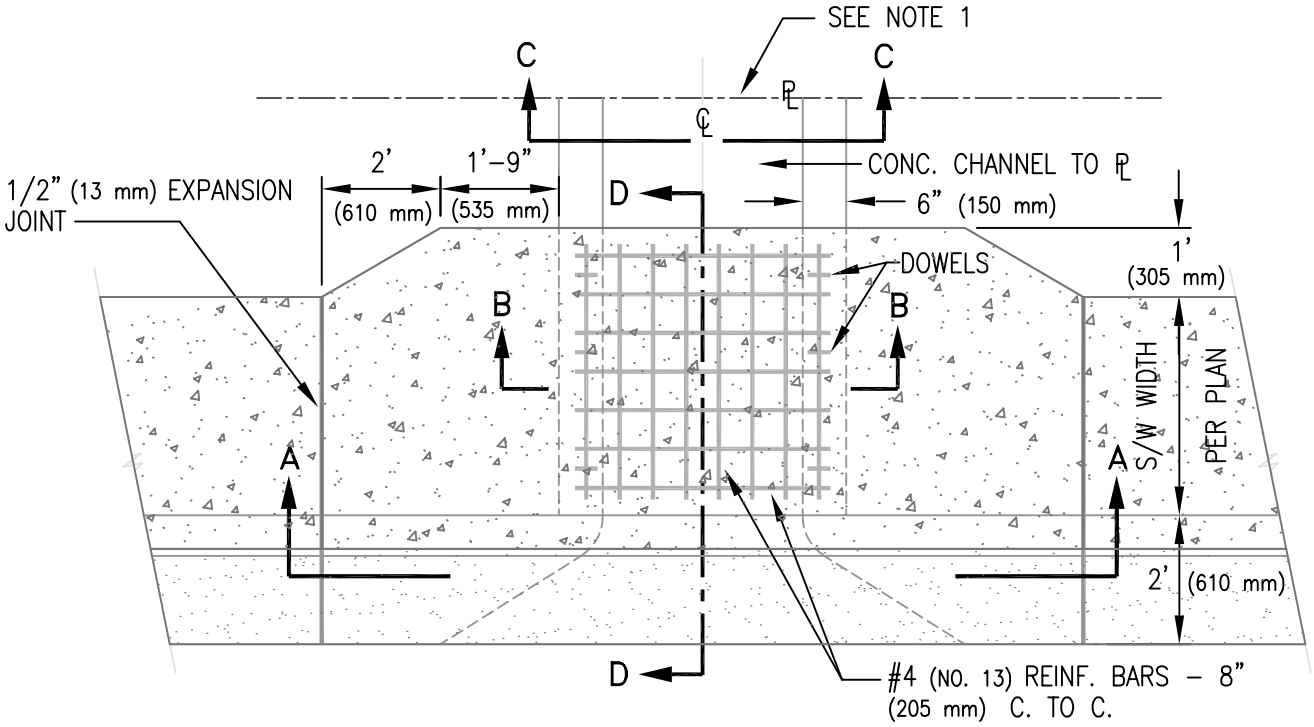

SCUPPER PLAN VIEW

ISSUED:		STANDARD DETAIL		DETAIL NO.
9/00	CITY OF TUCSON FOUNDED 1775	SIDEWALK SCUPPER TYPE 3	THE SEAL of PIMA COUNTY ARIZONA	205.5
REVISED: 7/02				SHEET 1 OF 3

205518.DWG 08/02/00 10:59

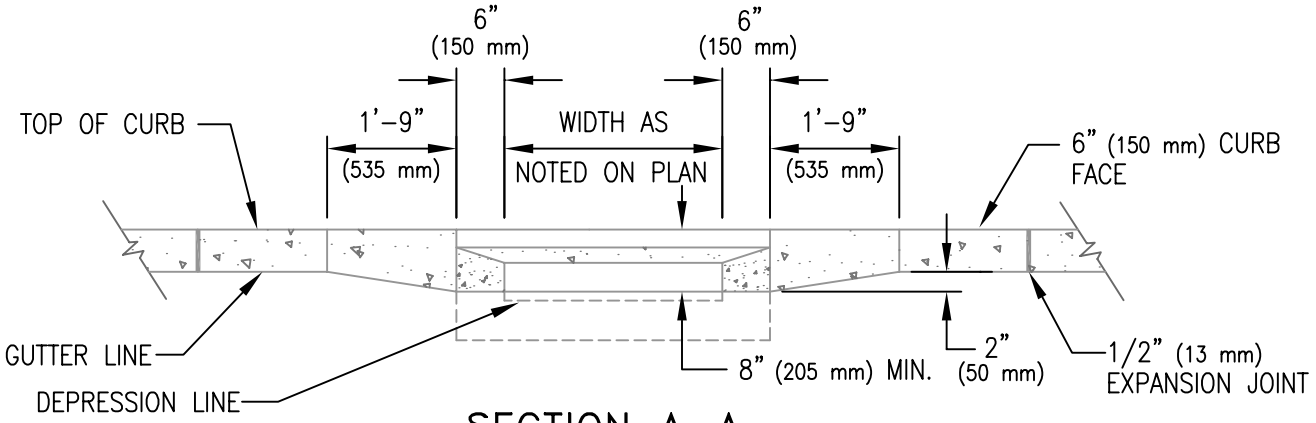

SECTION A–A

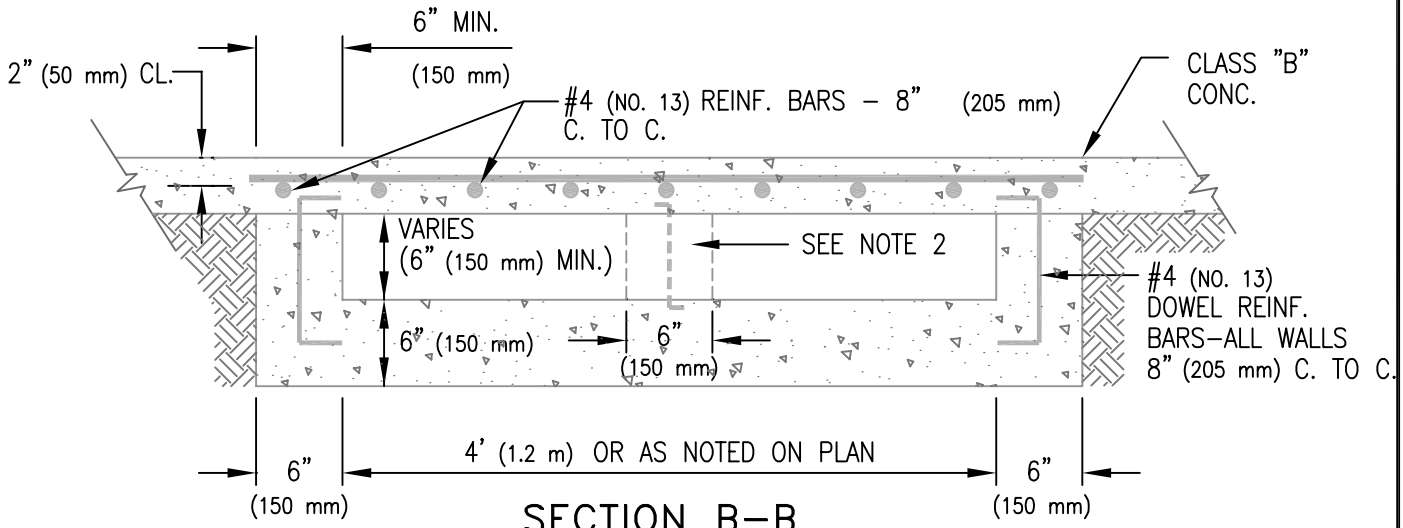

SECTION B–B

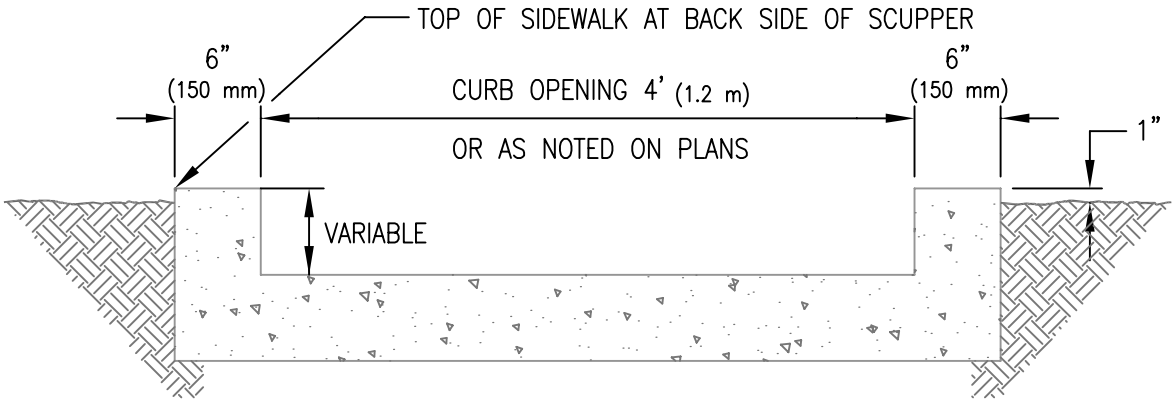

SECTION C–C
SPILLWAY

ISSUED:		STANDARD DETAIL		DETAIL NO.
9/00	CITY OF TUCSON	SIDEWALK SCUPPER TYPE 3	THE SEAL of PIMA COUNTY ARIZONA	205.5
REVISED:				
7/02				SHEET 2 OF 3

20552B.DWG 08/02/00 11:01

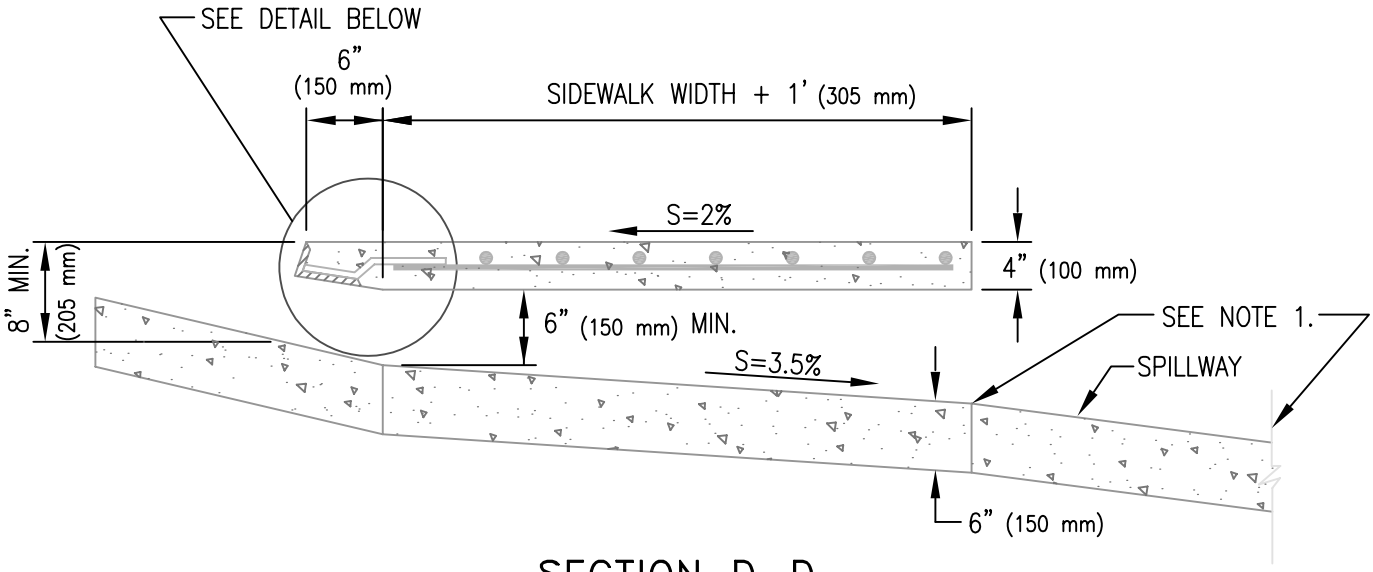

SECTION D–D

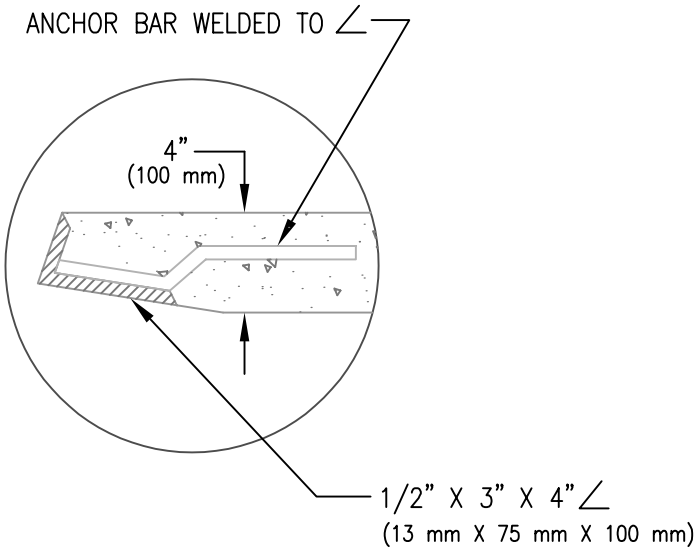

DETAIL

NOTES:

1. TRANSITION TO SPILLWAY/ CHANNEL AS PER APPROVED PLANS. SCUPPER GRADE MAY BE MODIFIED TO ALLOW FOR RUNOFF TO FLOW FROM RIGHT–OF–WAY INTO ROADWAY.

2. A CENTER WALL SHALL BE INSTALLED IN SCUPPERS WIDER THAN 4' (1.2 m) OR IF MORE THAN ONE SCUPPER IS BUILT IN SERIES.

3. EXPANSION JOINT FILLER SHALL BE 1/2" (13 mm) BITUMINOUS TYPE PREFORMED EXPANSION JOINT FILLER PER STD. SPEC. SECTION 1011.

4. CONCRETE SHALL BE CLASS 'S', f'c=3,000 psi (20.7 MPa).

ISSUED:		STANDARD DETAIL		DETAIL NO.
9/00		SIDEWALK SCUPPER TYPE 3		205.5
REVISED:				
7/02				SHEET 3 OF 3

20553B.DWG 08/02/00 10:19

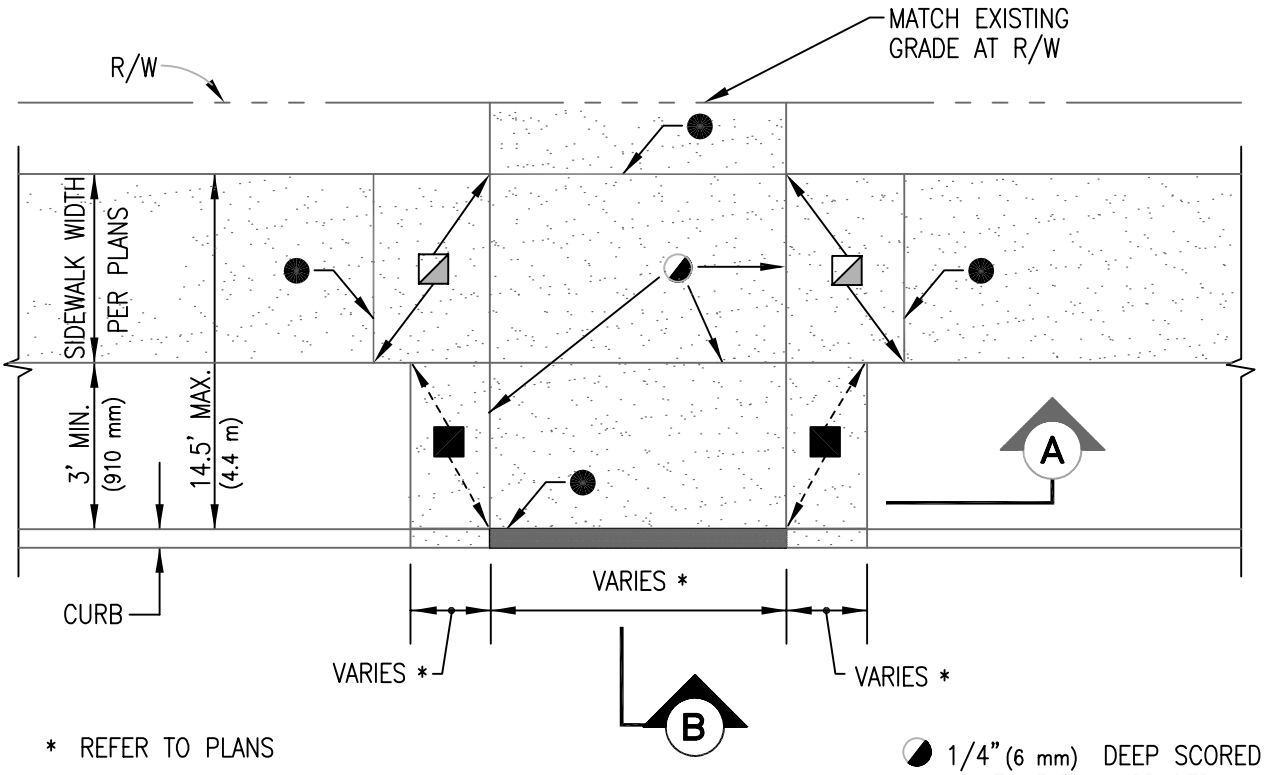

* REFER TO PLANS

WARP TO MATCH

12:1 MAX. SLOPE TO MATCH DRIVEWAY APRON IF REQUIRED. ADD TACTILE GROOVES PER STD. DET. 207 WHEN SLOPED

1/4" (6 mm) DEEP SCORED JOINTS EVENLY SPACED (8' (2 m) MAX. SPACING)

1/2" (13 mm) BITUMINOUS JOINT FILLER

PLAN

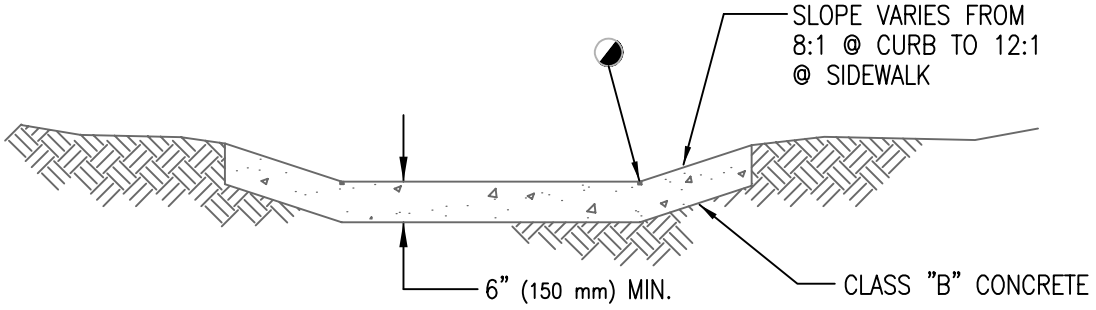

A SECTION

ISSUED:		STANDARD DETAIL		DETAIL NO.
10/88	CITY OF TUCSON FOUNDED 1776	DRIVEWAY APRON	THE SEAL of PIMA COUNTY ARIZONA	206
REVISED: 7/02				SHEET 1 OF 2

206018.DWG 08/03/00 15:53

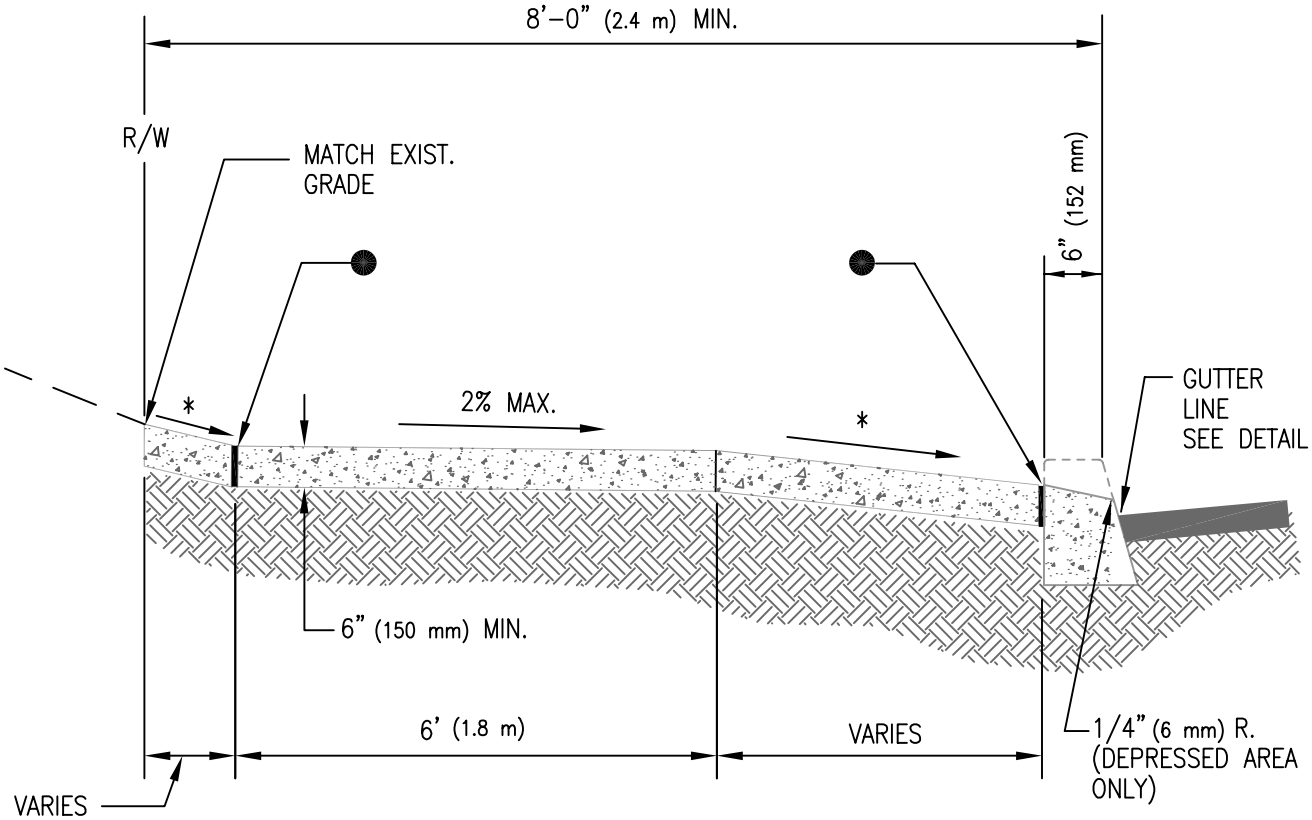

B SECTION

* STREET TYPE	MAXIMUM SLOPE
RESIDENTIAL	15%
COLLECTOR/ARTERIAL	6%

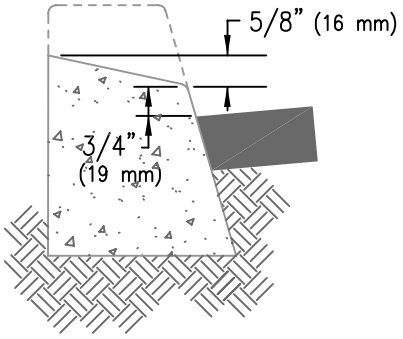

DETAIL

NOTE:

ALL DRIVEWAYS SHALL CONFORM TO THE AMERICANS WITH DISABILITY ACT OF 1990. DEVIATIONS FROM STANDARD DETAIL SHALL BE COORDINATED WITH THE AGENCY.

ISSUED:	STANDARD DETAIL	DETAIL NO.
6/91	DRIVEWAY APRON	206
REVISED: 7/02		SHEET 2 OF 2

20602B.DWG 08/02/00 11:06

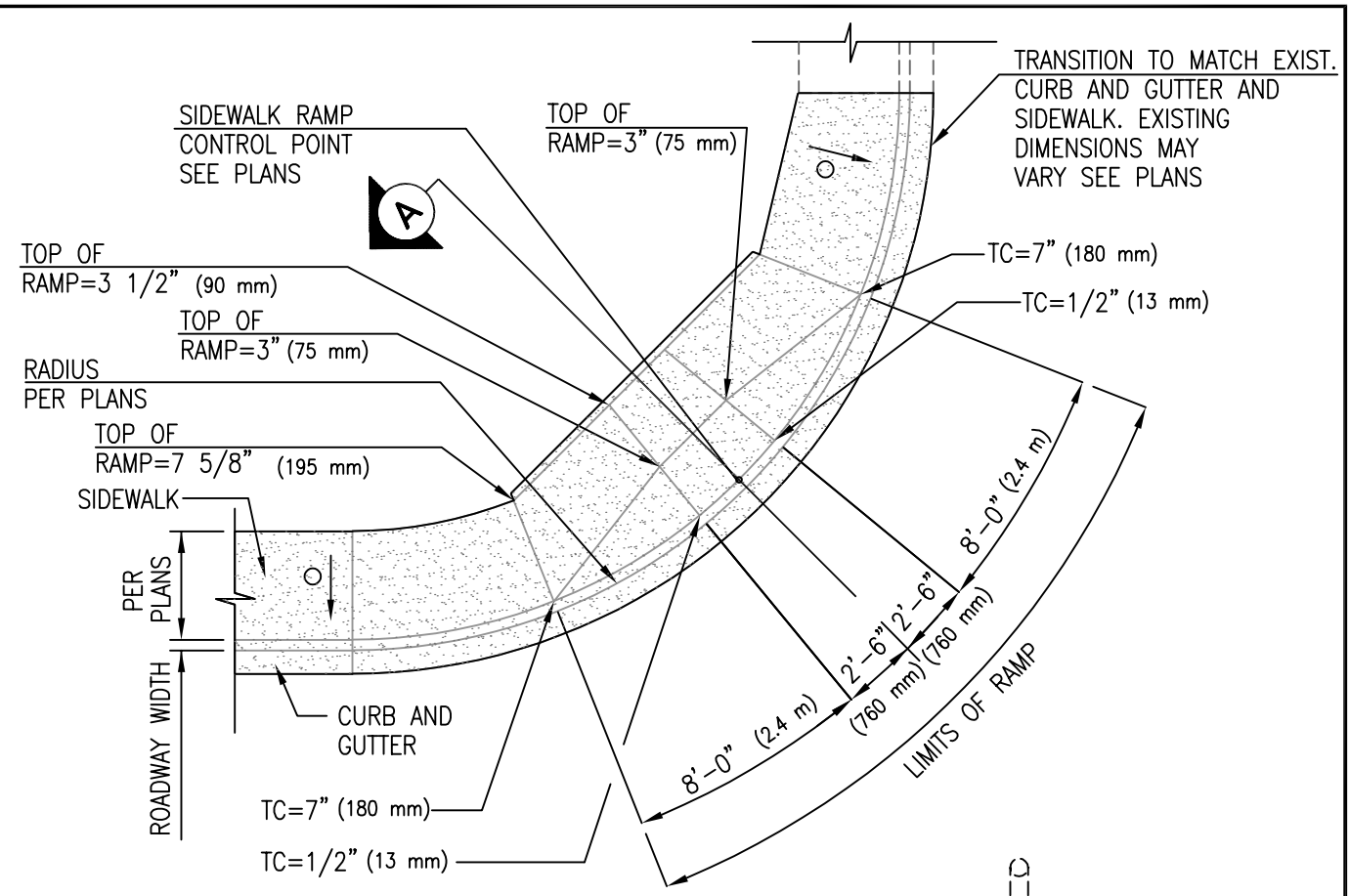

CROSS SLOPE (1% (TYP.))*

* MAXIMUM SLOPE = 2%

PLAN

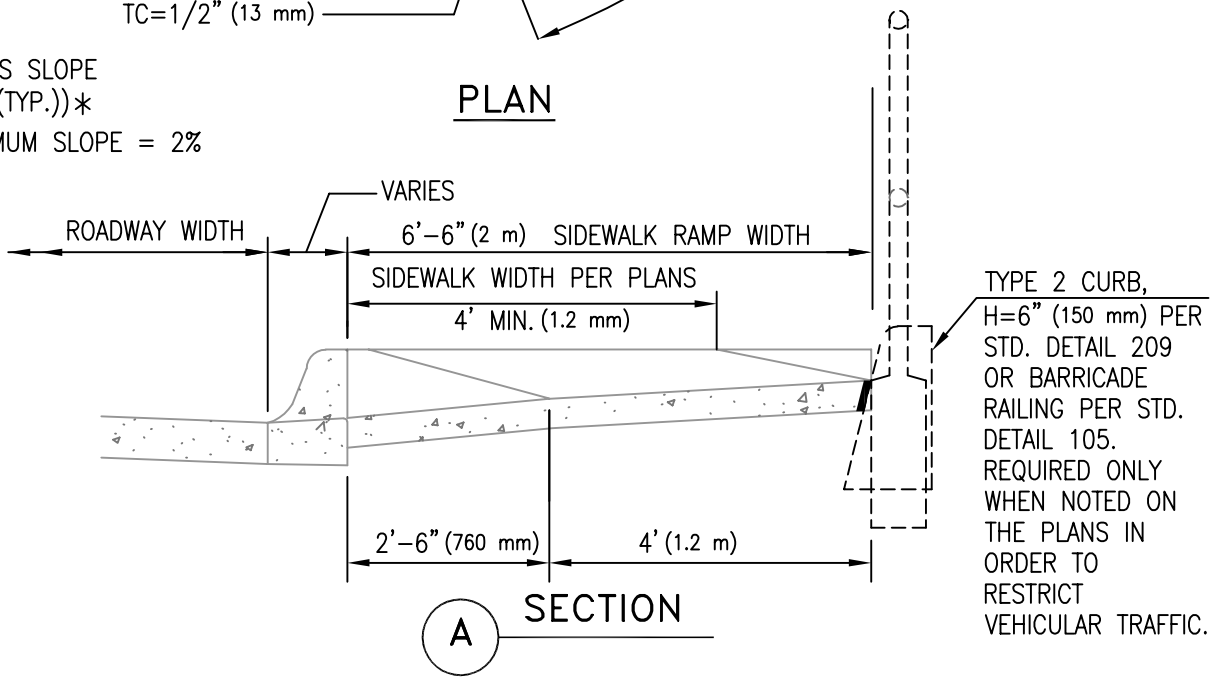

A SECTION

NOTE:

1. TOP OF CURB (TC) AND TOP OF RAMP ELEVATIONS SHOWN ARE IN RELATION TO THE GUTTER AND ARE LOCATED RADIALLY. GUTTER = 0"
2. SEE STD. DET. 200 JOINT REQUIREMENTS.
3. WHEN CURB HEIGHTS OF GREATER THAN 7" (180 mm) ARE SHOWN ON PLANS, SEE PLANS AND ADA REQUIREMENTS.
4. LANDING RAMP AREA TO BE STANDARD ON ALL PROJECTS WITHIN THE CITY OF TUCSON. TYPE 2 CURB WITH 6" (150mm) REVEAL OR BARRICADE RAILING REQUIRED ONLY WHEN NOTED ON THE PLANS IN ORDER TO RESTRICT VEHICULAR TRAFFIC. THESE FEATURES ARE TO BE USED IN OTHER JURISDICTIONS ONLY WHEN NOTED ON PLANS.

ISSUED:		STANDARD DETAIL		DETAIL NO.
10/88	CITY OF TUCSON FOUNDED 1776	CURB ACCESS RAMP	THE SEAL of PIMA COUNTY ARIZONA	207
REVISED: 7/02				SHEET 1 OF 5

207018.DWG 08/03/00 15:53

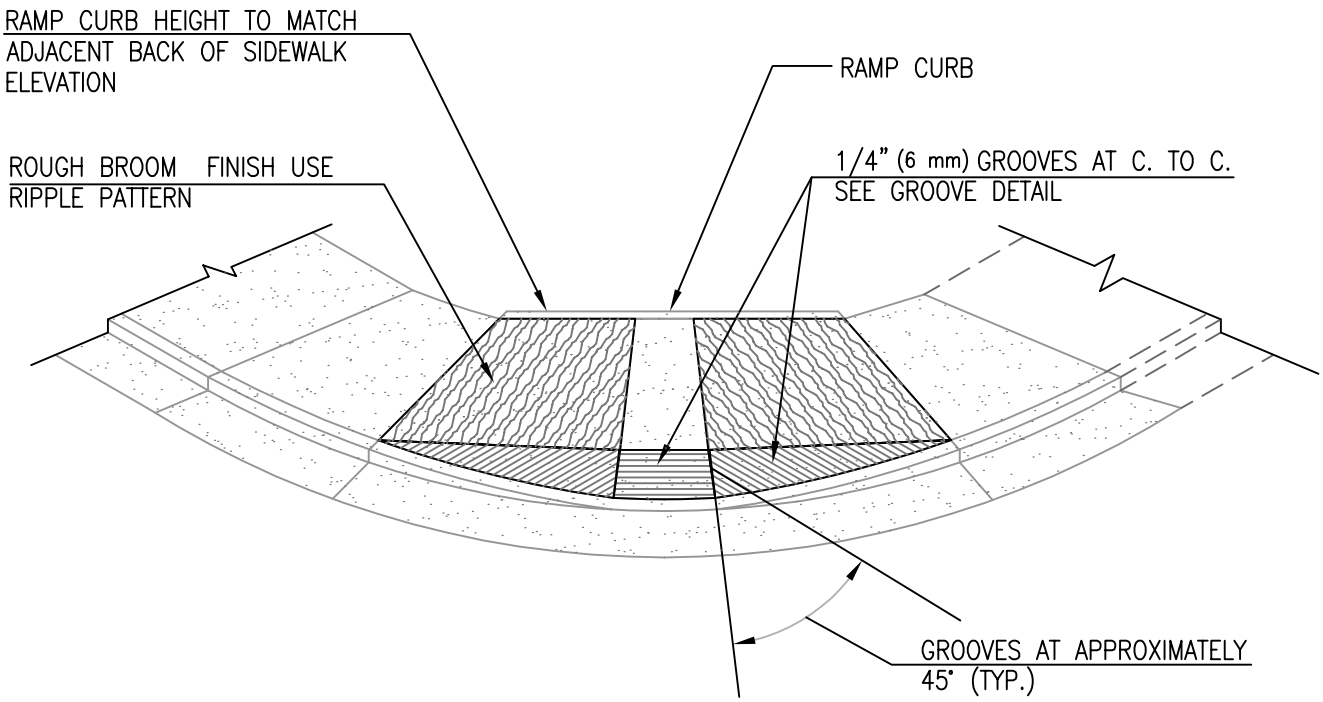

PERSPECTIVE

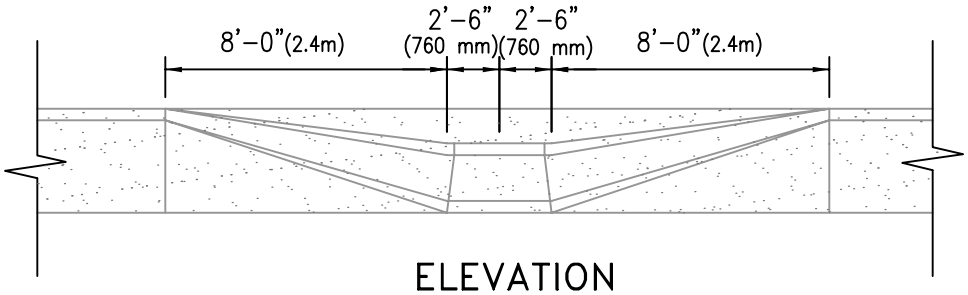

ELEVATION

DEPRESSED CURB AT SIDEWALK RAMP

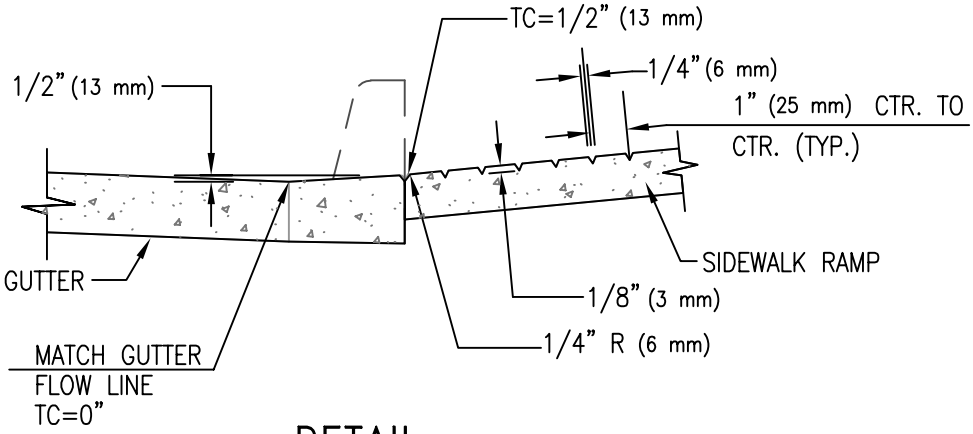

DETAIL

ISSUED:		STANDARD DETAIL		DETAIL NO.
10/88		CURB ACCESS RAMP		207
REVISED:				
7/02				SHEET 2 OF 5

207048.DWG 08/03/00 15:53

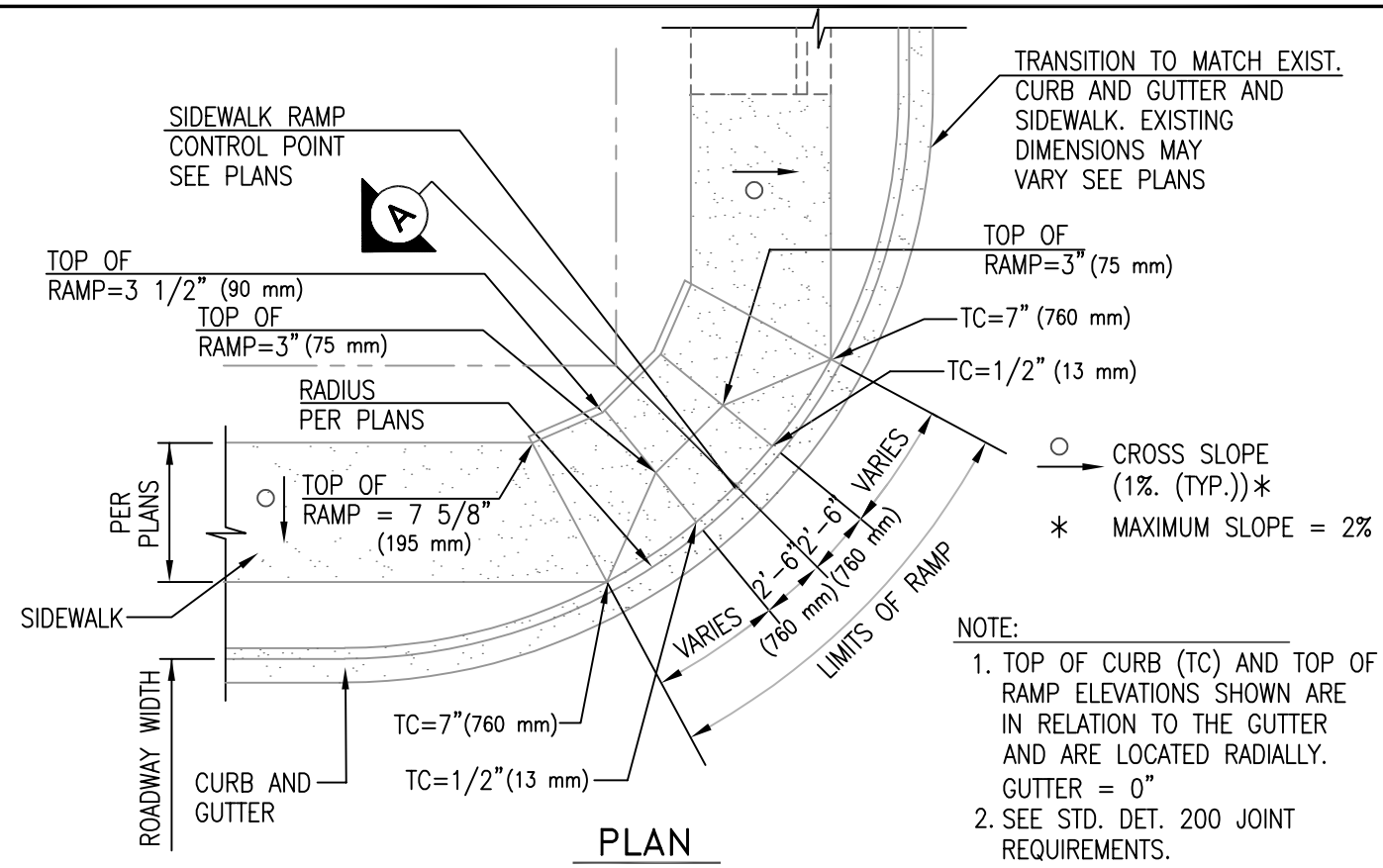

PLAN

NOTE:

1. TOP OF CURB (TC) AND TOP OF RAMP ELEVATIONS SHOWN ARE IN RELATION TO THE GUTTER AND ARE LOCATED RADIALLY. GUTTER = 0"
2. SEE STD. DET. 200 JOINT REQUIREMENTS.
3. WHEN CURB HEIGHTS OF GREATER THAN 7"(180 mm) ARE SHOWN ON PLANS, SEE PLANS AND ADA REQUIREMENTS.
4. REFER TO SHEET 3 OF 5 FOR RAMP SURFACE FINISH.

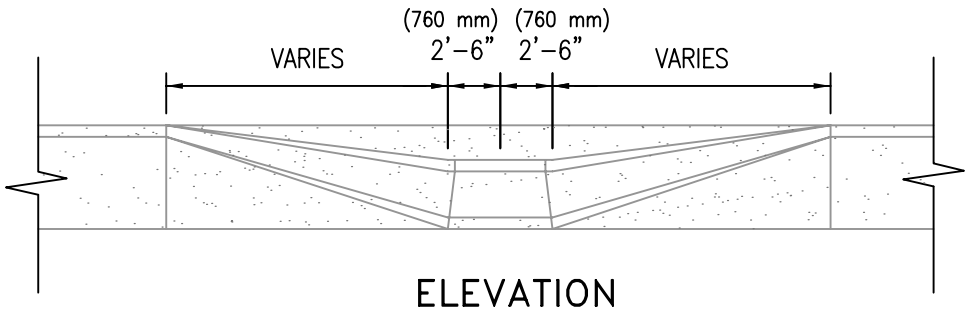

ELEVATION

DEPRESSED CURB AT SIDEWALK RAMP

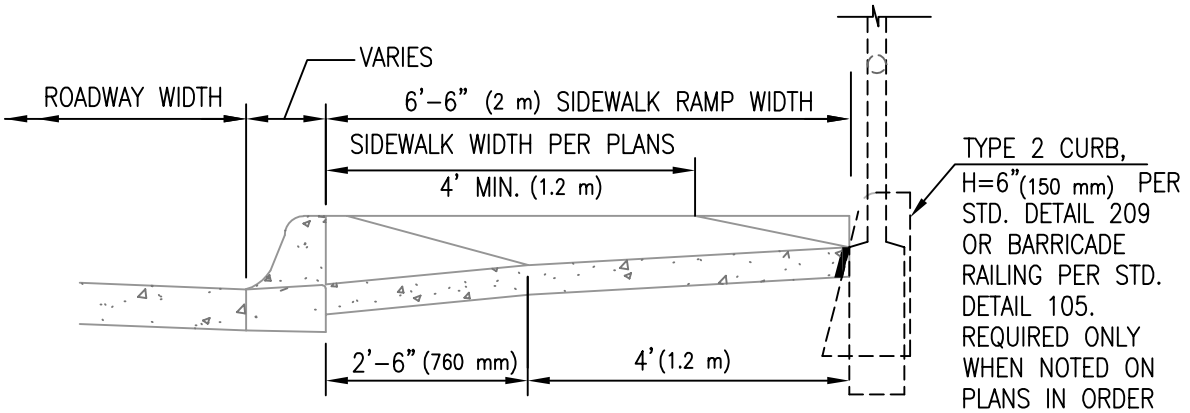

A SECTION

ISSUED:		STANDARD DETAIL		DETAIL NO.
10/88	CITY OF TUCSON FOUNDED 1776	CURB ACCESS RAMP LIMITED RIGHT-OF-WAY	THE SEAL of PIMA COUNTY ARIZONA	207
REVISED: 7/02				SHEET 3 OF 5

207028.DWG 08/02/00 11:12

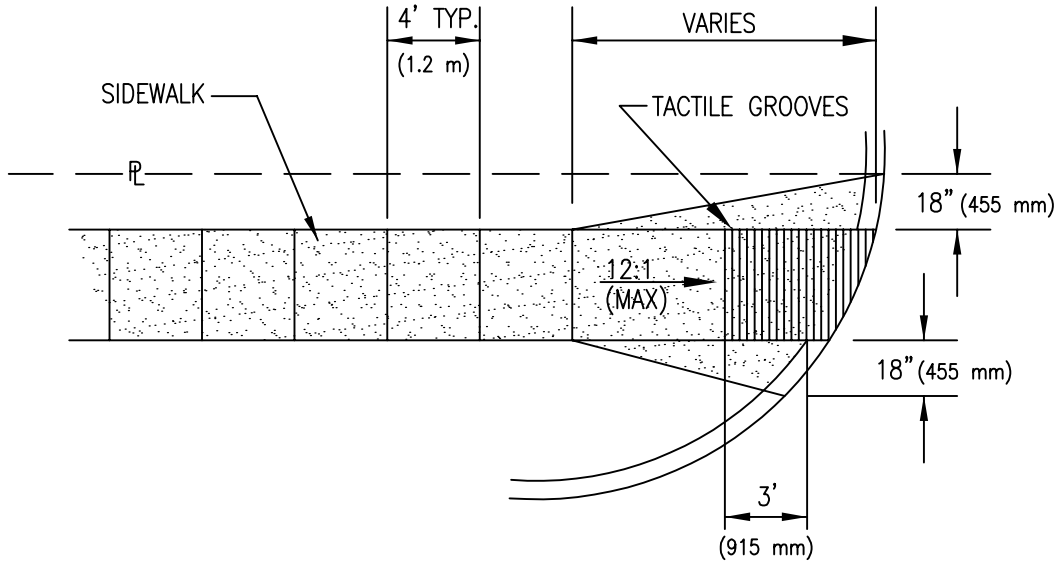

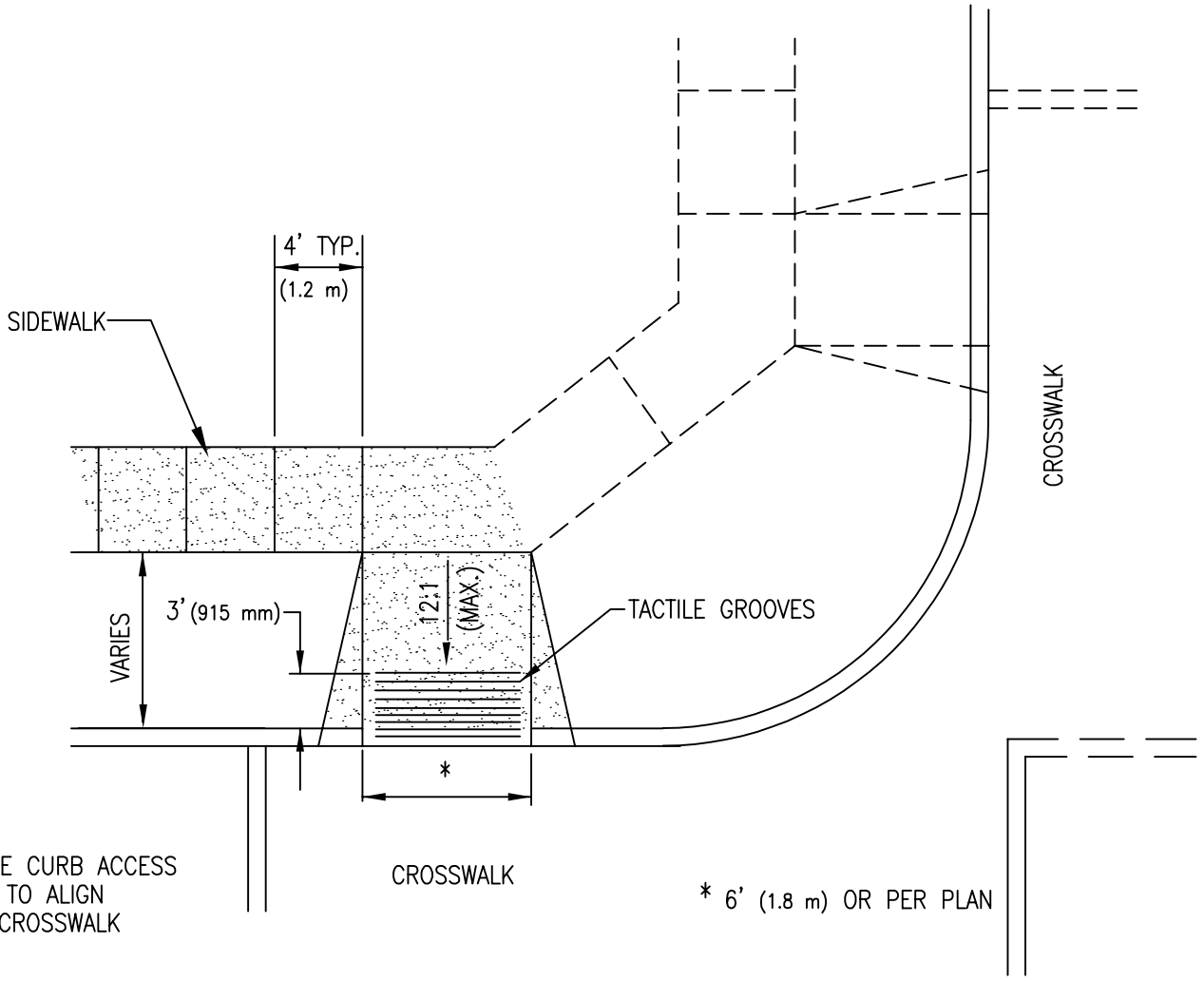

ISSUED:		STANDARD DETAIL		DETAIL NO.
10/88	CITY OF TUCSON FOUNDED 1776	CURB ACCESS RAMP ALTERNATIVES	THE SEAL of PIMA COUNTY ARIZONA	207
REVISED: 7/02				SHEET 4 OF 5

207033B.DWG 08/02/00 11:15

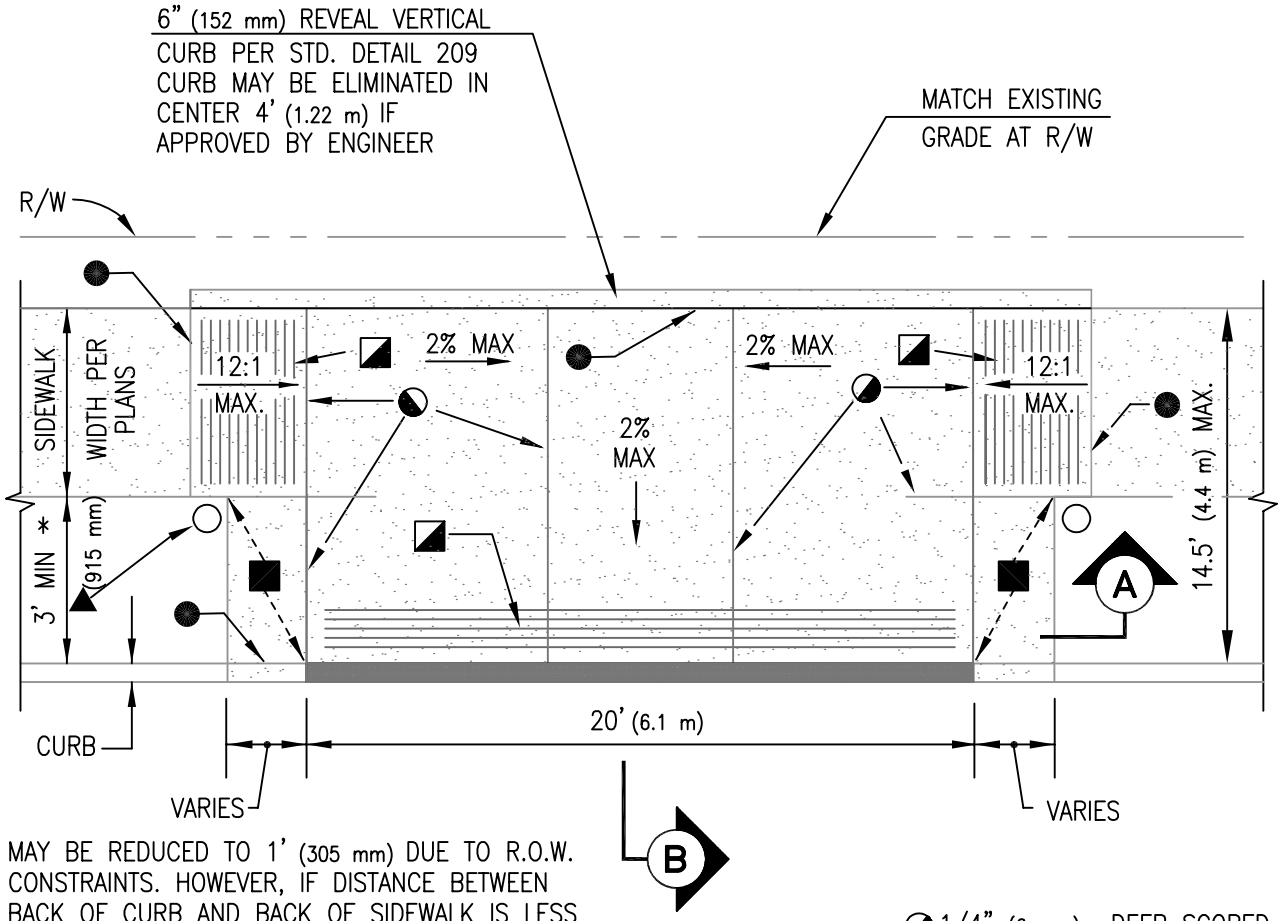

* MAY BE REDUCED TO 1' (305 mm) DUE TO R.O.W. CONSTRAINTS. HOWEVER, IF DISTANCE BETWEEN BACK OF CURB AND BACK OF SIDEWALK IS LESS THAN 7' (2.1 m), THE DISABLED SPACE SHALL NOT BE DESIGNATED "VAN ACCESSIBLE".

■ WARP TO MATCH

◪ TACTILE GROOVES. PLACE GROOVES IN CONC. 1" (25 mm) APART, 1/4" (6 mm) WIDE, 1/8" (3 mm) DEEP. GROOVES MAY BE SAWCUT OR TOOLED.

▲ TYPE 'A' POST BARRICADE PER STD. DETAIL 106 FINISH W/ BLUE ENAMEL AND 4" (100 mm) WHITE REFLECTORIZED TAPE. THE ENGINEER SHALL APPROVE THE SHADE OF BLUE ENAMEL PRIOR TO USE. FACE OF POST BARRICADE SHALL BE 2" (50 mm) FROM EDGE OF CONCRETE.

◑ 1/4" (6 mm) DEEP SCORED JOINTS EVENLY SPACED (8' (2.4 m) MAX. SPACING)

● 1/2" (13 mm) BITUMINOUS JOINT FILLER.

NOTE: DEPRESSED CURB IN RAMP AREA SHALL BE PLACED MONOLITHIC WITH RAMP

PLAN

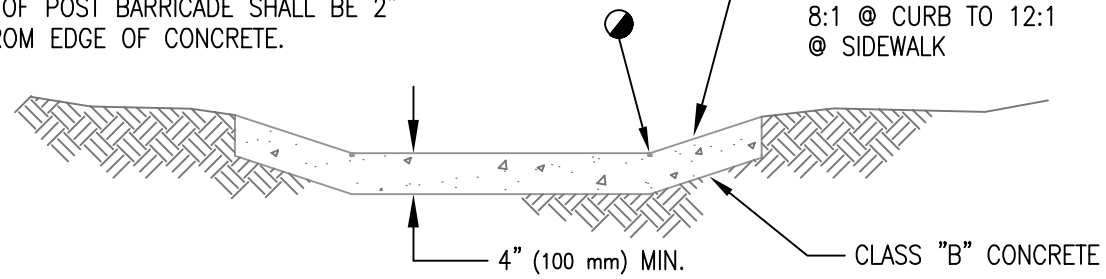

A SECTION

REFER TO STD. DETAIL 207. SHEET 1 OF 3 FOR RAMP DETAIL AT GUTTER LINE

ISSUED:		STANDARD DETAIL		DETAIL NO.
1/93	CITY OF TUCSON FOUNDED 1776	VAN ACCESSIBLE CURB ACCESS RAMP AT DISABLED PARKING STALL	THE SEAL of PIMA COUNTY ARIZONA	207
REVISED: 7/02				SHEET 5 OF 5

207108.DWG 08/02/00 11:18

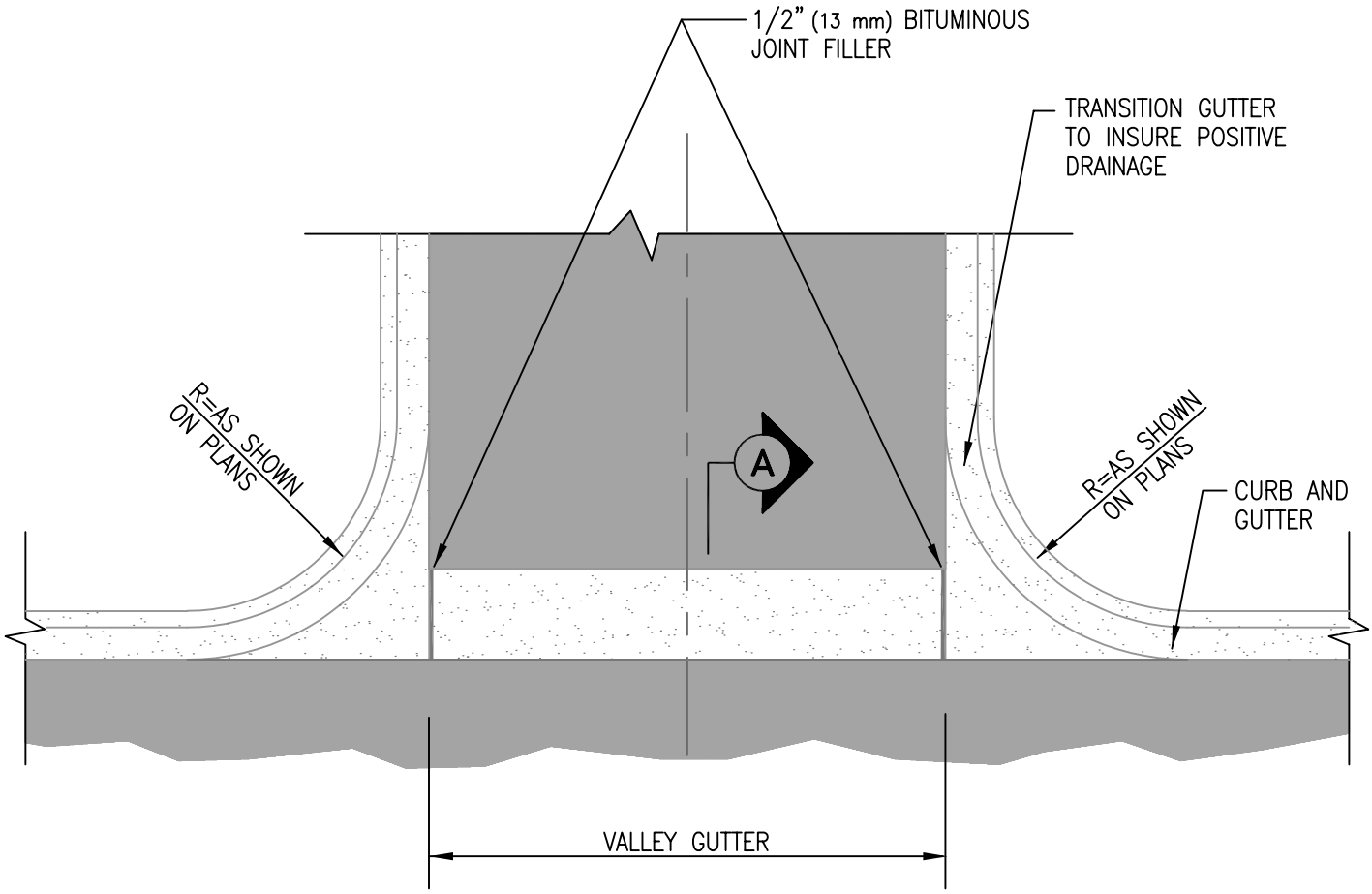

PLAN

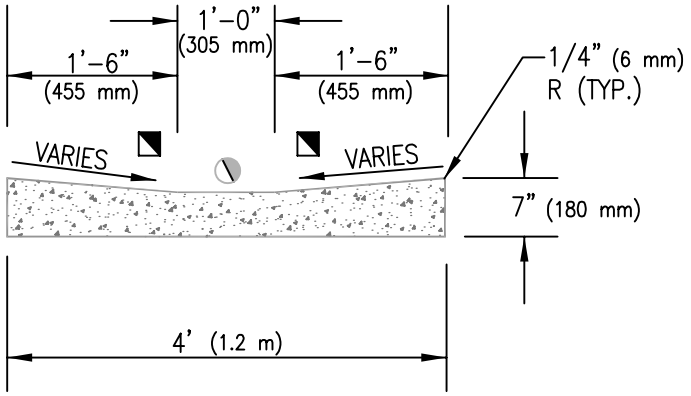

TROWEL FINISH

MAX. SLOPE= 8%
CONCRETE SHALL BE CLASS "B",
F'c = 2,500 PSI (17.2 MPa)

A SECTION

ISSUED:		STANDARD DETAIL		DETAIL NO.
10/88		CONCRETE VALLEY GUTTER		208
REVISED: 7/02				SHEET 1 OF 1

208B.DWG 08/02/00 11:21

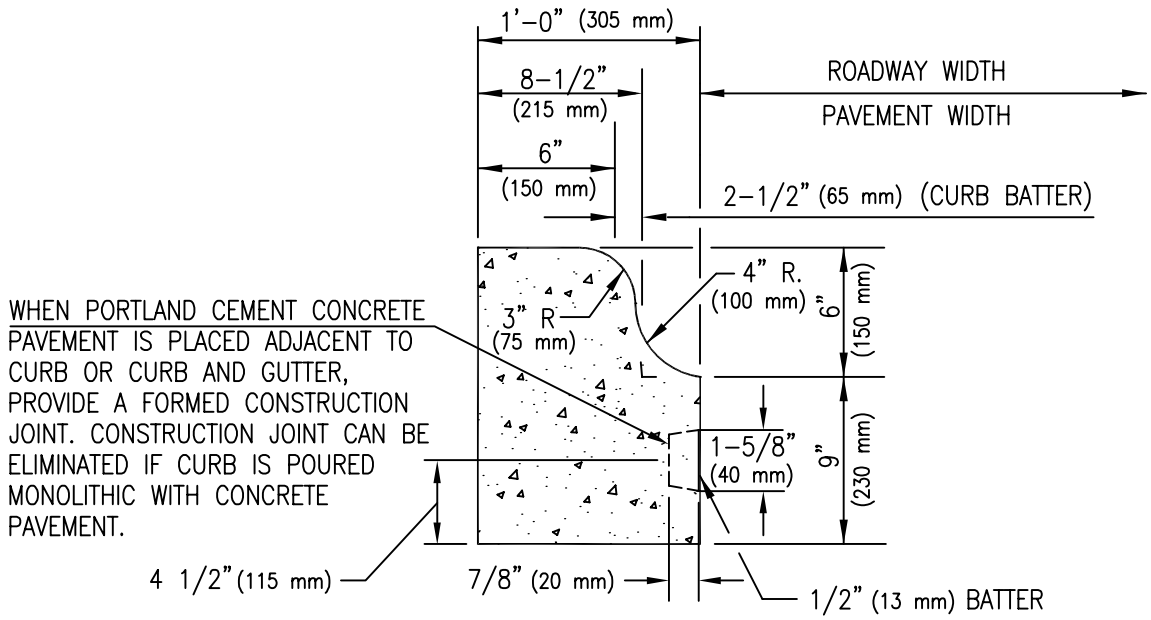

CONCRETE VERTICAL CURB–TYPE 1

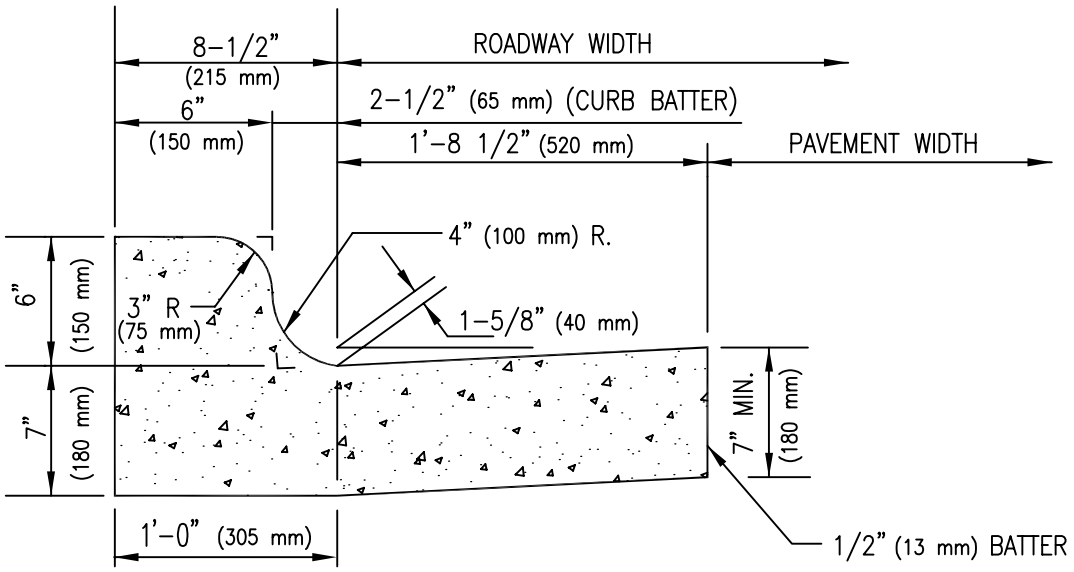

CONCRETE VERTICAL CURB AND GUTTER–TYPE 1(G)

REFER TO NOTES SHEET 3 OF 3

ISSUED:		STANDARD DETAIL		DETAIL NO.
10/88		CONCRETE CURB		209
REVISED:				
7/02				SHEET 1 OF 3

209018.DWG 06/02/00 11:35

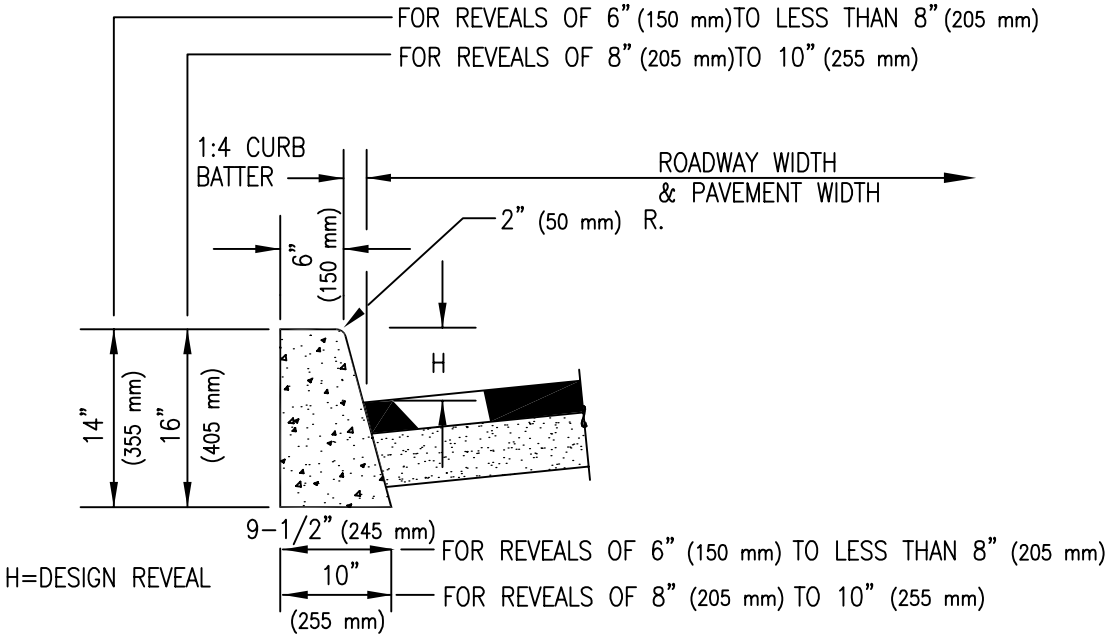

CONCRETE VERTICAL CURB–TYPE 2

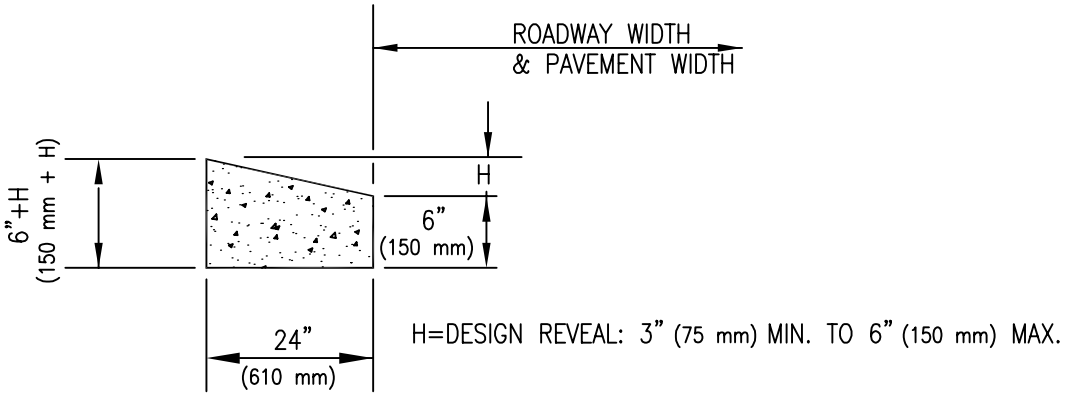

CONCRETE WEDGE CURB

REFER TO NOTES SHEET 3 OF 3

ISSUED:		STANDARD DETAIL		DETAIL NO.
10/88		CONCRETE CURB		209
REVISED: 7/02				SHEET 2 OF 3

209028.DWG 08/03/00 15:57

NOTES

1. ALL CONCRETE CURBS AND TRANSITIONS, SHALL HAVE A MINIMUM COMPRESSIVE STRENGTH OF 2,500 PSI (17.2 MPa) AND BE CLASS "B".

2. MAXIMUM SPACING ON SCORED JOINTS SHALL BE 15' (4.6 m).

3. ONE HALF INCH (13 mm) THICK EXPANSION JOINTS SHALL BE LOCATED AT TANGENT POINTS IN CURB RETURNS, TRANSITIONS, AND AT A MAXIMUM OF 60 FEET (18.3 m) INTERVALS. EXPANSION MATERIAL SHALL ALSO BE PLACED BETWEEN CURBS AND ADJACENT STRUCTURES, SIDEWALKS, DRIVEWAYS AND HANDICAP RAMPS. THE 1/2 INCH (13 mm) JOINT FILLER SHALL EXTEND THE FULL DEPTH OF THE CONCRETE.

4. CONCRETE SHALL BE FINISHED WITH A STEEL TROWEL FOLLOWED BY BRUSHING WITH A FINE BRUSH ALONG THE LENGTH OF THE CURB OR CURB AND GUTTER.

5. ALL FLOW LINES OF CONCRETE GUTTERS SHALL BE TROWELED TO AN ACCURATE GRADE.

6. WHEN THE SLOPE OF THE PAVEMENT IS AWAY FROM THE CURB AND GUTTER THE SLOPE OF THE GUTTER SHALL MATCH THE PAVEMENT CROSS SLOPE.

7. THE HEIGHT OF THE WEDGE CURB SHALL BE DETERMINED BY THE DRAINAGE CONTAINMENT REQUIRED.

8. SINGLE CURB AND CURB AND GUTTER MAY BE CONSTRUCTED BY THE USE OF FORMS OR MAY BE SLIP FORMED.

9. ALL EXPOSED EDGES AND HAND TOOLED JOINTS SHALL BE FINISHED WITH A TOOL HAVING A 1/4 INCH (6 mm) RADIUS UNLESS A LARGER RADIUS IS INDICATED BY THE APPLICABLE STANDARD DETAIL OR PROJECT PLANS.

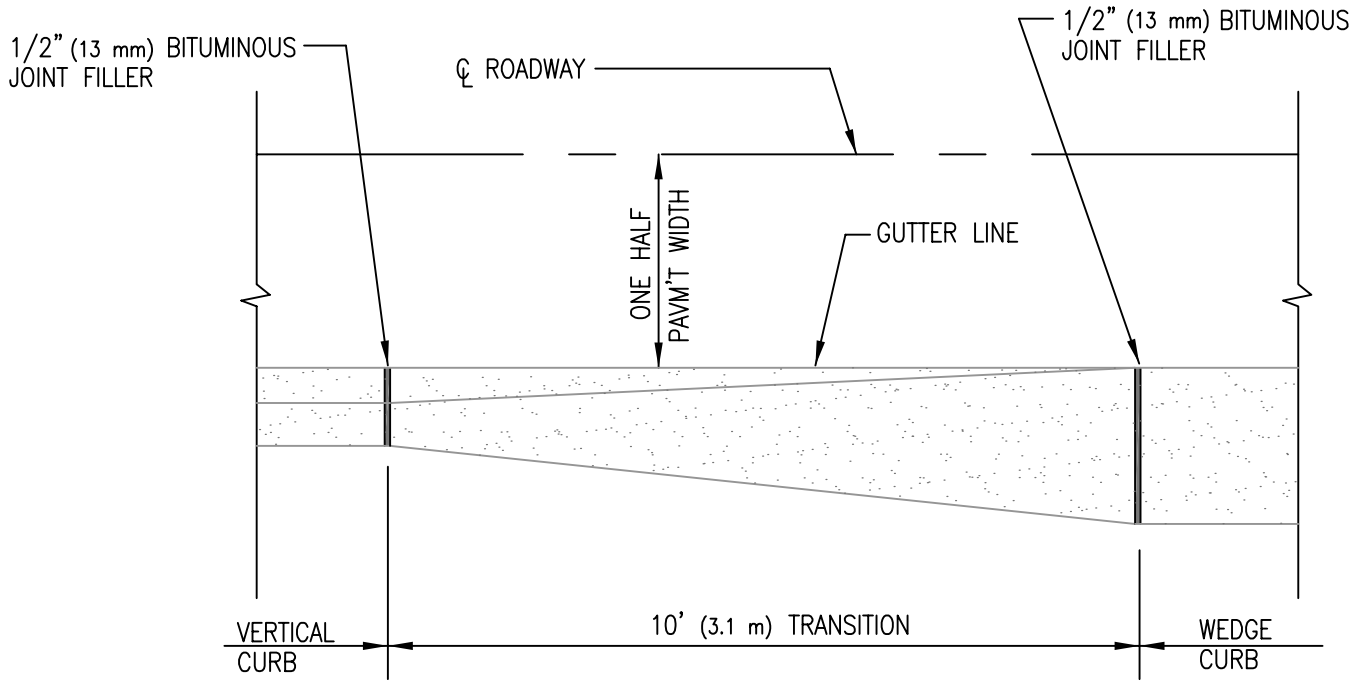

VERTICAL CURB TO WEDGE CURB

TRANSITIONS FROM WEDGE TO VERTICAL SHALL BEGIN AT ECR OR BCR W/ VERTICAL CURB CARRIED THROUGH RETURN

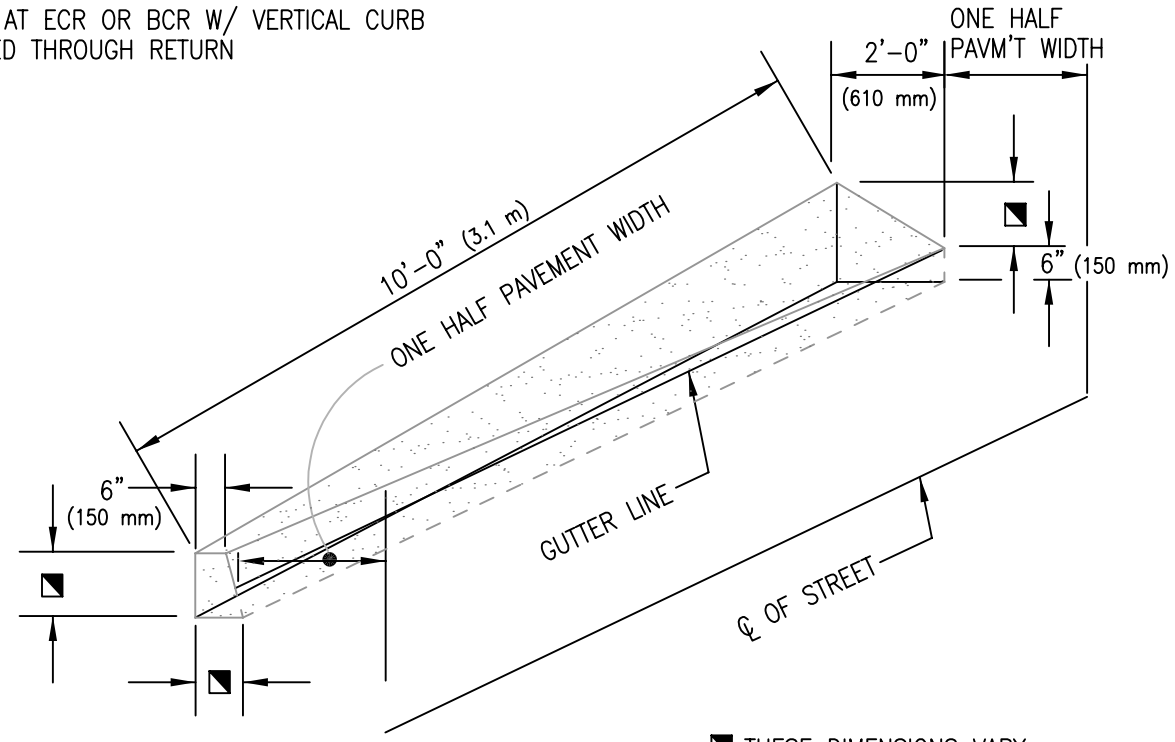

NOTE:

PAVEMENT WIDTH REMAINS CONSTANT THROUGH TRANSITION.

◥ THESE DIMENSIONS VARY, DEPENDING ON THE DESIGN REVEAL

VERTICAL CURB TO WEDGE CURB

ISSUED:		STANDARD DETAIL		DETAIL NO.
10/88	CITY OF TUCSON FOUNDED 1776	CONCRETE CURB TRANSITION	THE SEAL of PIMA COUNTY ARIZONA	210
REVISED: 7/02				SHEET 1 OF 1

210B.DWG 08/02/00 11:42

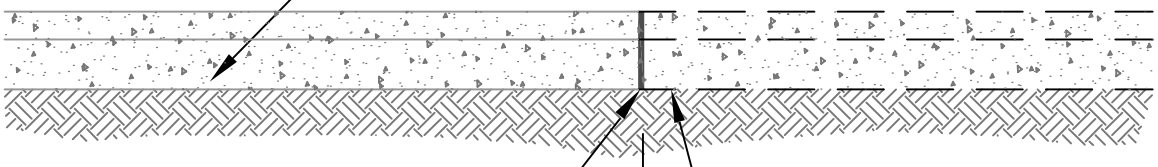

NOTE:

IF AN EXISTING EXPANSION JOINT IS 10' (3.1 m) OR LESS AWAY FROM THE DIMENSIONED JOINT, REMOVE EXISTING CURB TO THE EXISTING EXPANSION JOINT IN LIEU OF THE SAW CUT.

ISSUED:		STANDARD DETAIL		DETAIL NO.
10/88		CONCRETE CURB NEW TO EXISTING CONNECTION		211
REVISED:				
7/02				SHEET 1 OF 1

211B.DWG 07/28/00 13:37

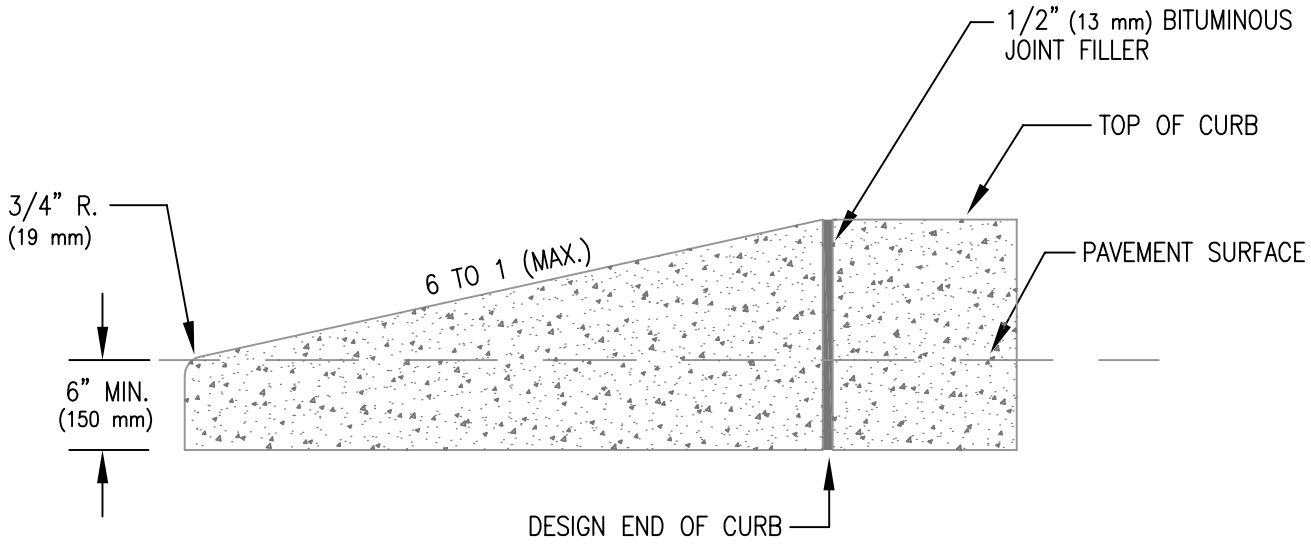

VERTICAL CURB TERMINAL SECTION

212B.DWG 08/02/00 11:43

ISSUED:		STANDARD DETAIL		DETAIL NO.
10/88		CONCRETE CURB TERMINAL SECTION		212
REVISED:				
7/02				SHEET 1 OF 1

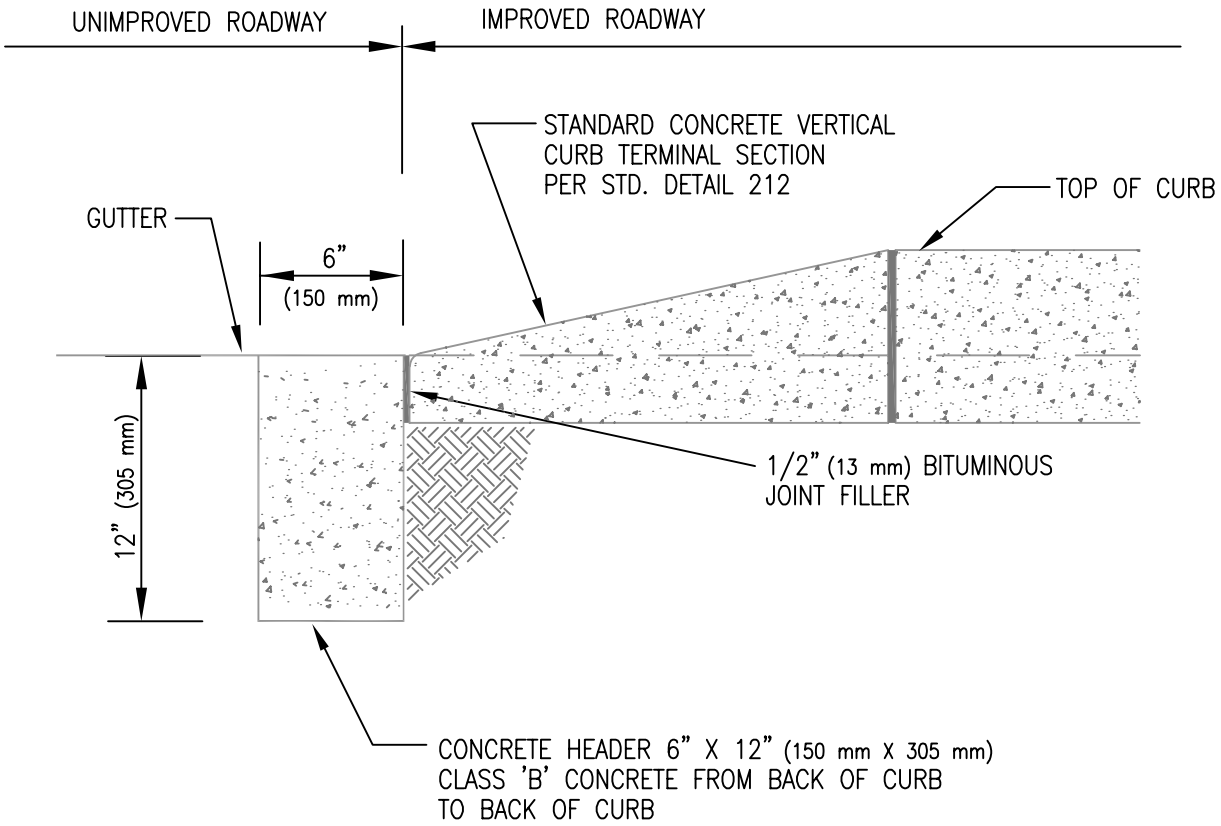

ISSUED:		STANDARD DETAIL		DETAIL NO.
10/88		CONCRETE HEADER		213
REVISED:				
7/02				SHEET 1 OF 1

2138.DWG 08/02/00 11:44

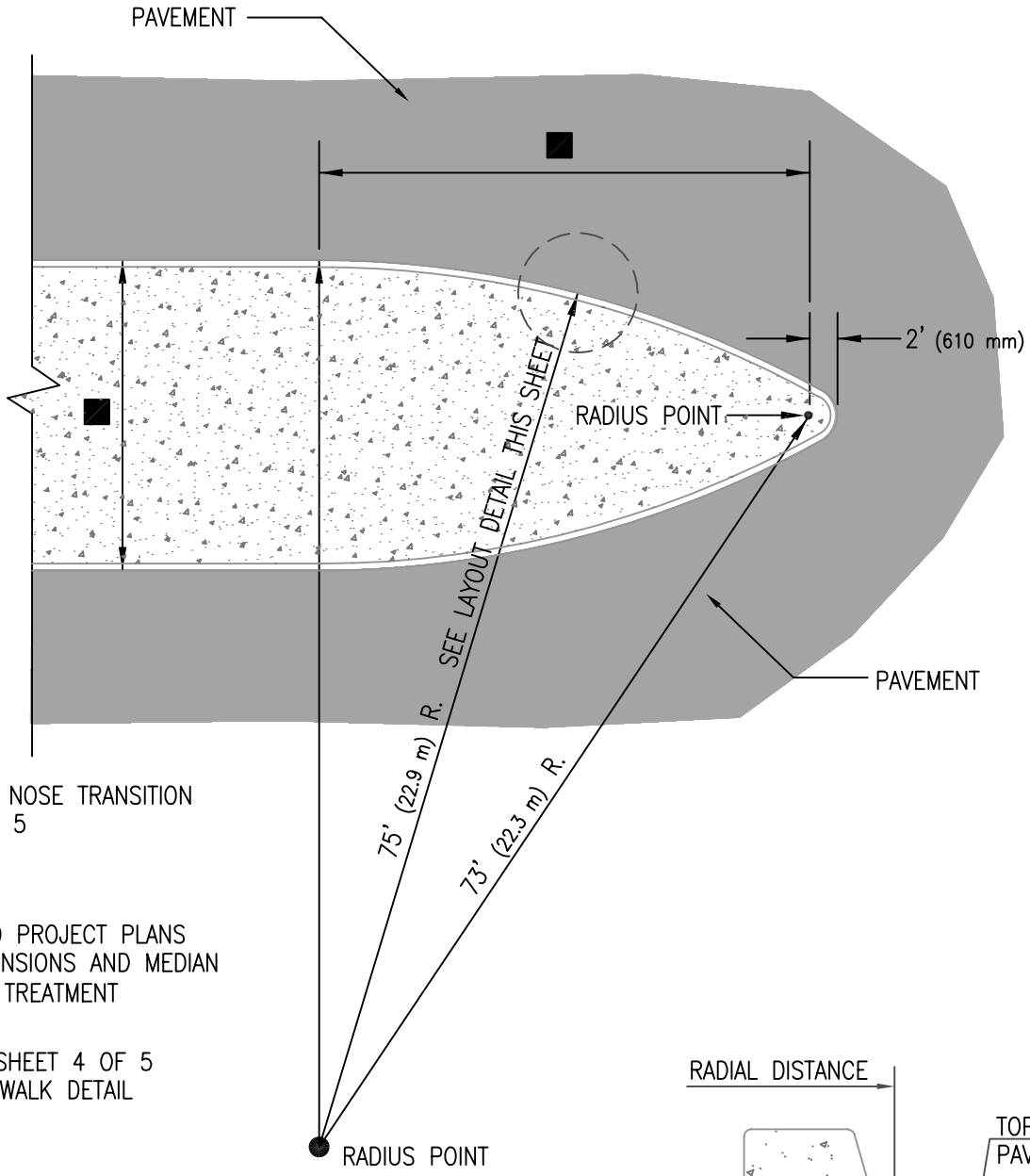

SEE MEDIAN NOSE TRANSITION
SHEET 5 OF 5

■ REFER TO PROJECT PLANS FOR DIMENSIONS AND MEDIAN SURFACE TREATMENT

REFER TO SHEET 4 OF 5 FOR CROSSWALK DETAIL

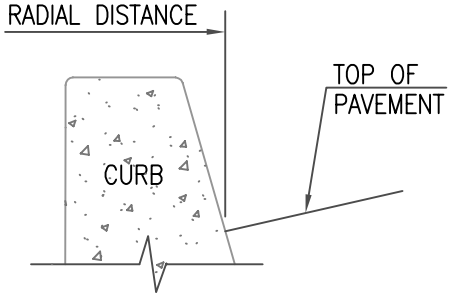

LAYOUT DETAIL

ISSUED:		STANDARD DETAIL		DETAIL NO.
10/88	CITY OF FOUNDED 1776 TUCSON	CURBED MEDIAN NOSE	THE SEAL of PIMA COUNTY ARIZONA	214
REVISED: 7/02				SHEET 1 OF 5

21401B.DWG 08/03/00 08:07

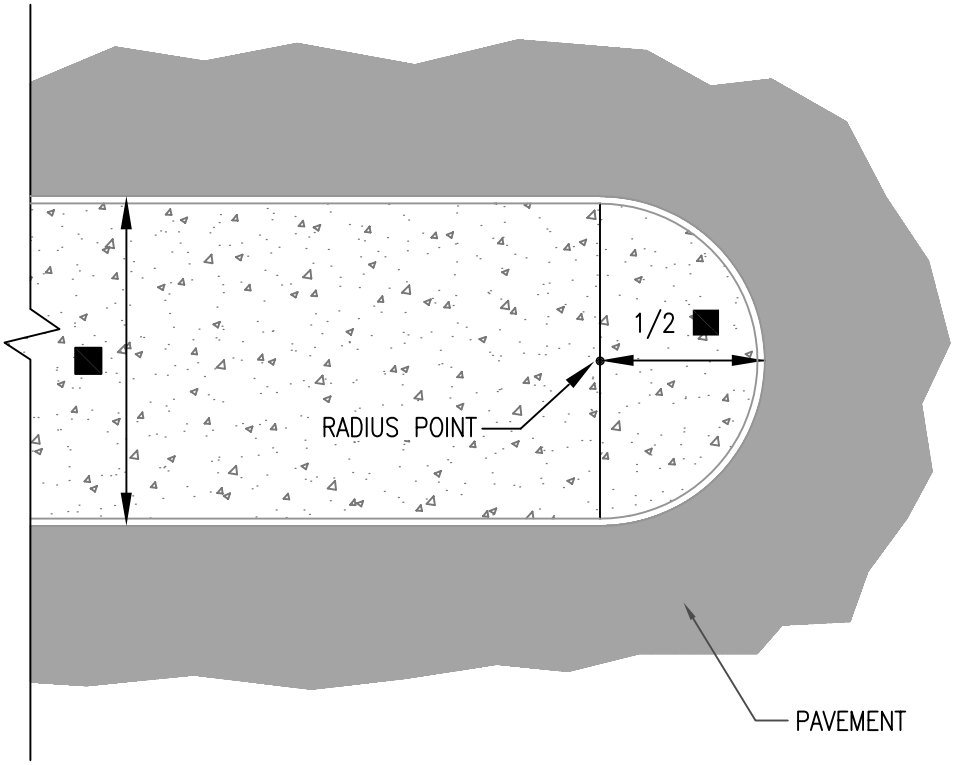

SEE MEDIAN NOSE TRANSITION SHEET 5 OF 5

■ REFER TO PROJECT PLANS FOR DIMENSIONS AND MEDIAN SURFACE TREATMENT

REFER TO SHEET 1 OF 5 FOR LAYOUT DETAIL

ISSUED:		STANDARD DETAIL		DETAIL NO.
10/88		CURBED MEDIAN NOSE		214
REVISED:				
7/02				SHEET 2 OF 5

214028.DWG 07/28/00 14:03

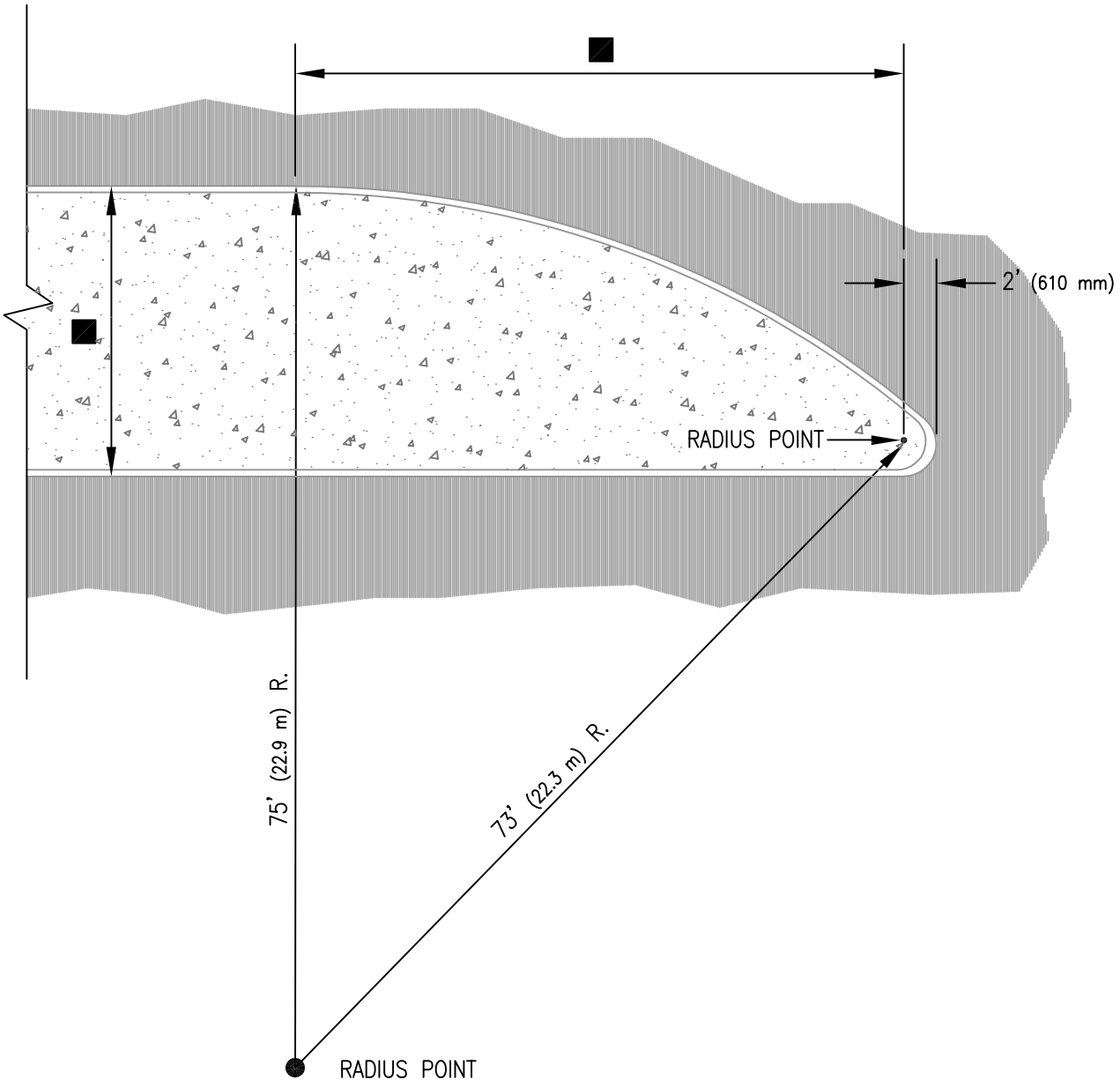

SEE MEDIAN NOSE TRANSITION
SHEET 5 OF 5

■ REFER TO PROJECT PLANS FOR DIMENSIONS AND MEDIAN SURFACE TREATMENT

REFER TO SHEET 1 OF 5 FOR LAYOUT DETAIL

REFER TO SHEET 4 OF 5 FOR CROSSWALK DETAIL

ISSUED:		STANDARD DETAIL		DETAIL NO.
10/88		CURBED MEDIAN NOSE		214
REVISED: 7/02				SHEET 3 OF 5

214038.DWG 08/03/00 08:08

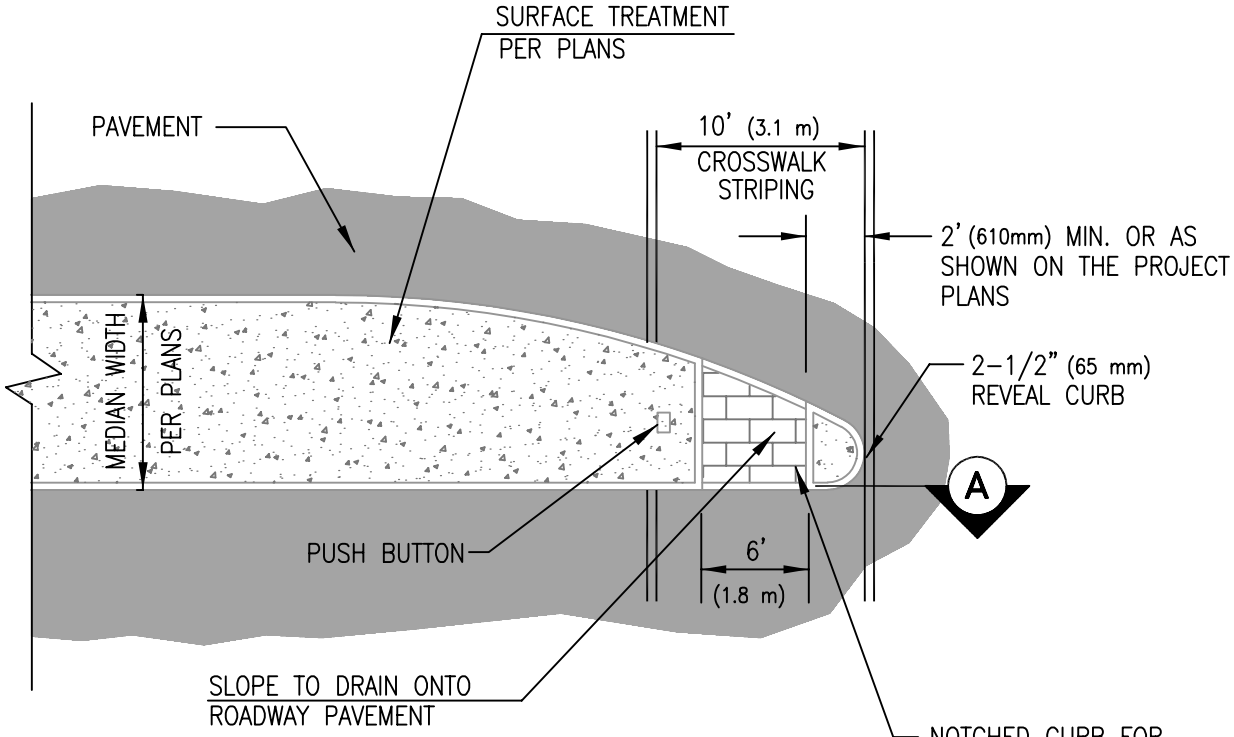

PLAN

NOTCHED CURB FOR
WHEELCHAIR
SURFACE TREATMENT
PER PLANS OR SPECIAL
PROVISIONS.

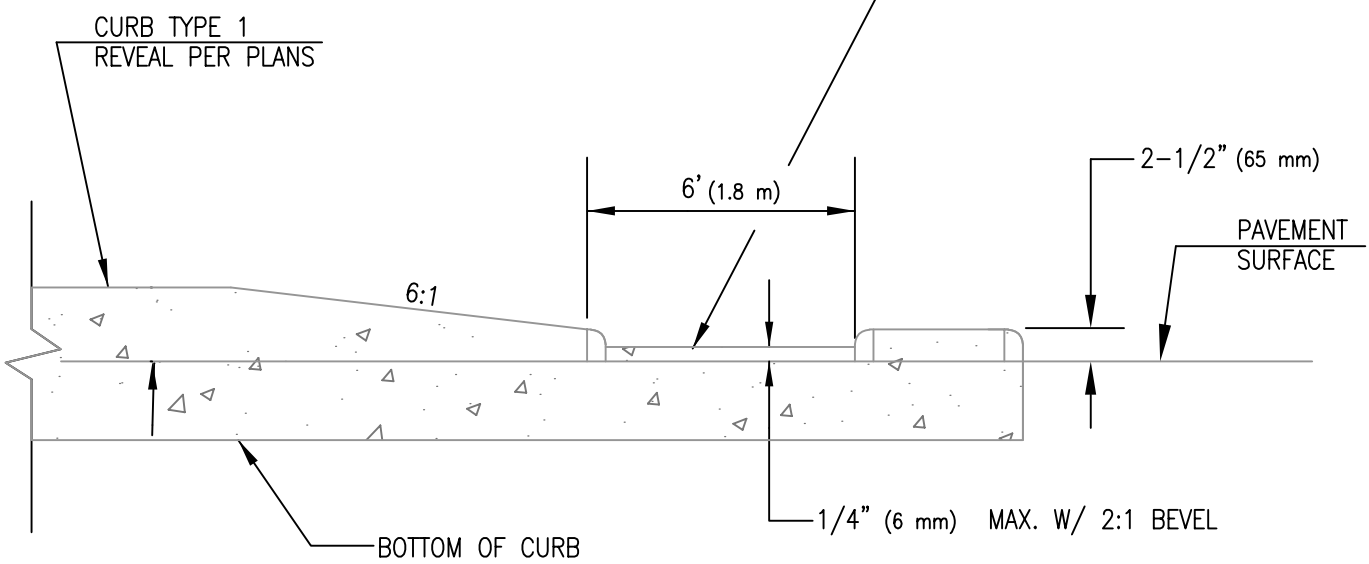

A SECTION

CROSSWALK THROUGH MEDIAN

REFER TO STD. DET. T 1105 FOR LOCATION OF PEDESTRIAN PUSH BUTTON.

ISSUED:		STANDARD DETAIL		DETAIL NO.
10/88		CURBED MEDIAN NOSE		214
REVISED:				
7/02				SHEET 4 OF 5

21404B.DWG 08/03/00 09:10

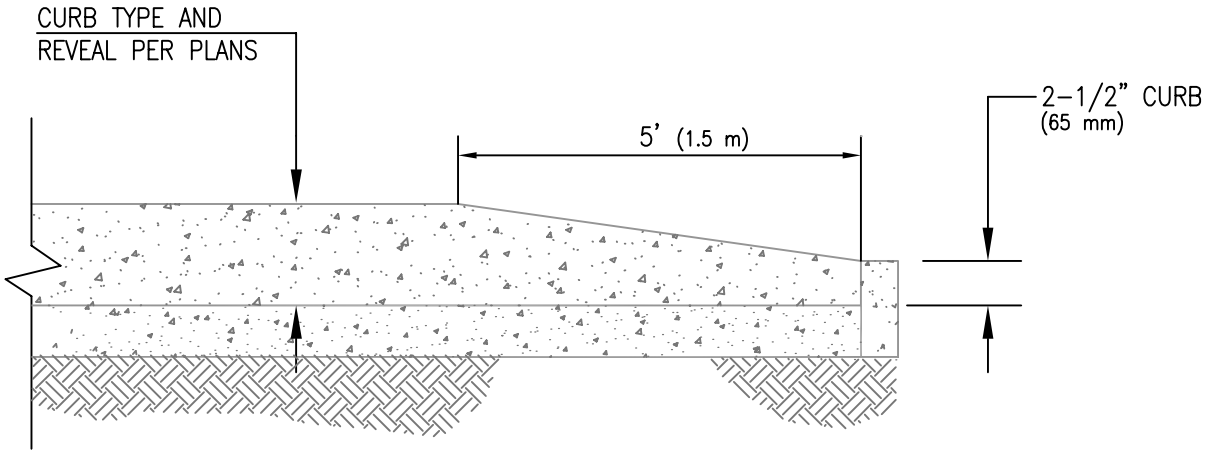

MEDIAN NOSE TRANSITION

NOTES:

1. ALL DIMENSIONS ARE MEASURED TO THE FRONT FACE OF CURB AT THE POINT OF MEASUREMENT OF THE ROADWAY WIDTH AS NOTED ON STD. DETAIL 209.

2. ALL MEDIAN NOSES SHALL BE PAVED WITH 2" (50 mm) P.C.C. OR DECORATIVE PAVEMENT, AS SPECIFIED ON THE PLANS, FROM RADIUS POINT TO THE END OF THE NOSE.

ISSUED:		STANDARD DETAIL		DETAIL NO.
10/88		CURBED MEDIAN NOSE		214
REVISED: 7/02				SHEET 5 OF 5

214058.DWG 06/03/00 09:13

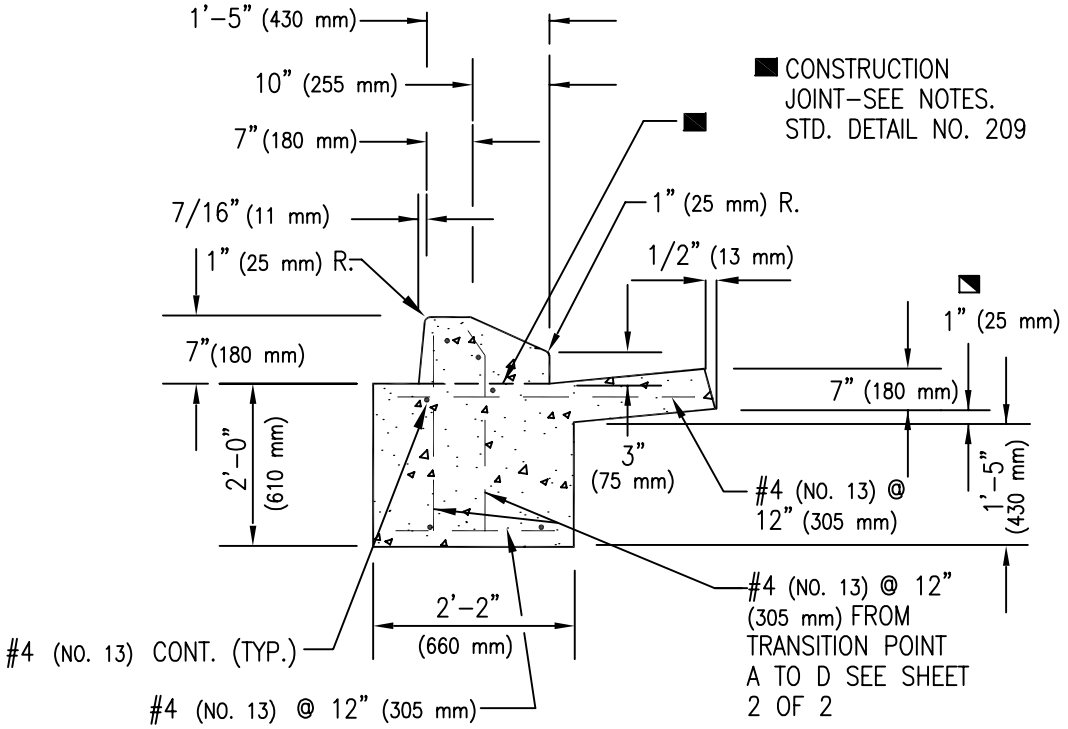

SECTION

(AT END OF TRANSITION)

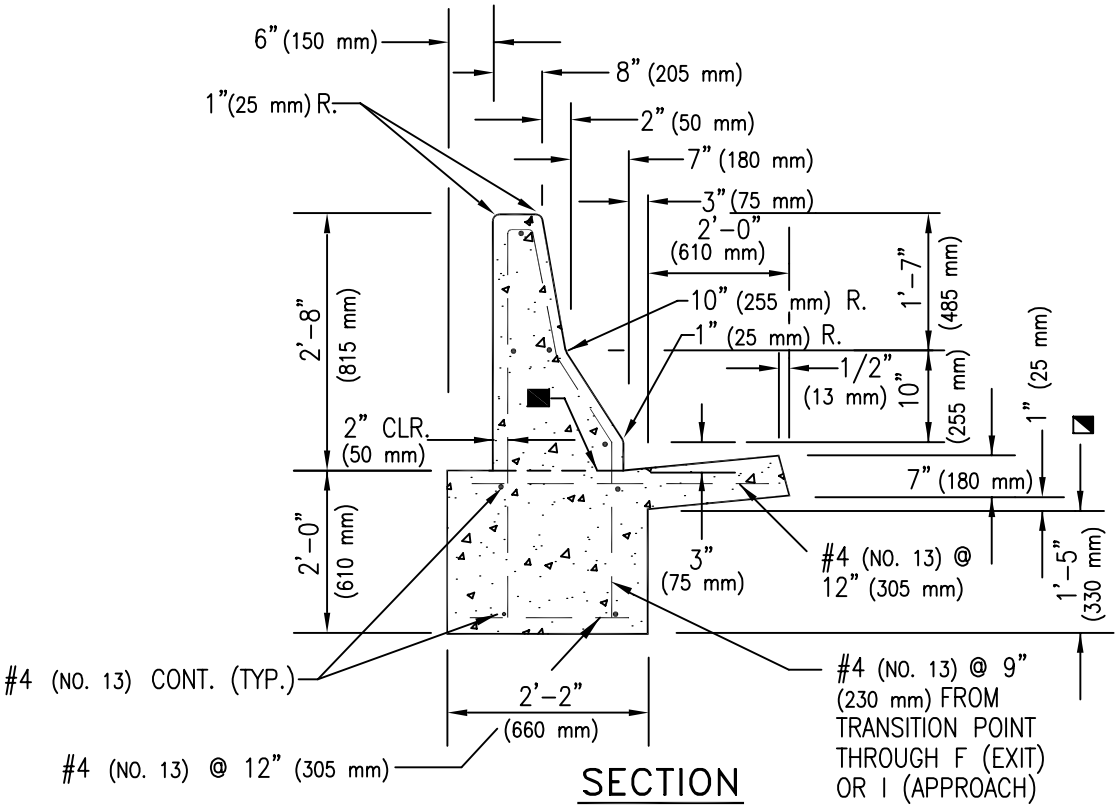

SECTION

AT "I" (APPROACH) OR "F" (EXIT)

REFER TO SHEET 2 OF 2

ISSUED:		STANDARD DETAIL		DETAIL NO.
10/88	CITY OF TUCSON FOUNDED 1776	CONCRETE BARRIER TRANSITION	THE SEAL of PIMA COUNTY ARIZONA	215
REVISED: 7/02				SHEET 1 OF 2

21501B.DWG 08/03/00 09:28

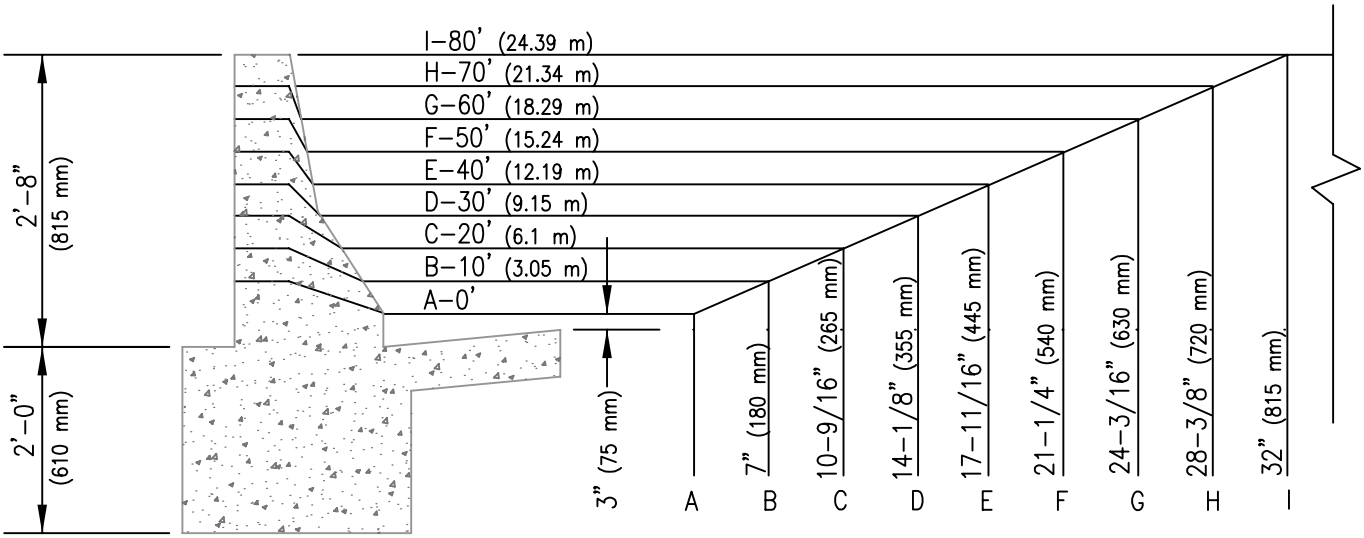

APPROACH TRANSITION DETAIL

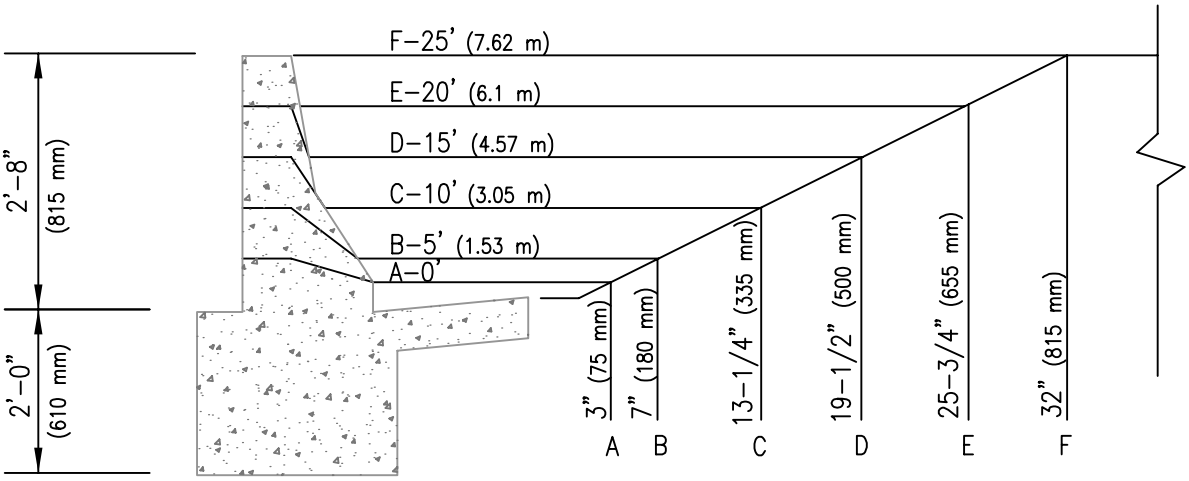

EXIT TRANSITION DETAIL

NOTES:

1. CONCRETE SHALL BE CLASS "S", F'c = 3,000 P.S.I. (20.7 MPa)

■ 2. WHEN CONSTRUCTION JOINT IS USED, THE VERTICAL #4 (NO. 13) BARS SHALL HAVE A 12" (305 mm) MIN. LAP.

◪ 3. WHEN CURB & GUTTER SECTION IS LOCATED WITH THE ROADWAY SECTION SLOPING TOWARDS THE GUTTER, THE SLOP PROVIDED BY THE 1 INCH (25 mm) DROP SHALL BE IN ADDITION TO THE ROADWAY CROSS SLOPE. SIMILARLY, WHEN THE CURB & GUTTER IS LOCATED WITH THE ROADWAY SECTION SLOPING AWAY FROM THE CURB, THE GUTTER SLOPE SHALL MATCH THE ROADWAY CROSS SLOPE.

4. ALL REINFORCING STEEL SHALL HAVE 2" (50 mm) OF COVER TYPICAL.

ISSUED:		STANDARD DETAIL		DETAIL NO.
10/88	CITY OF TUCSON FOUNDED 1776	CONCRETE BARRIER TRANSITION	THE SEAL of PIMA COUNTY ARIZONA	215
REVISED: 7/02				SHEET 2 OF 2

215028.DWG 08/03/00 10:01

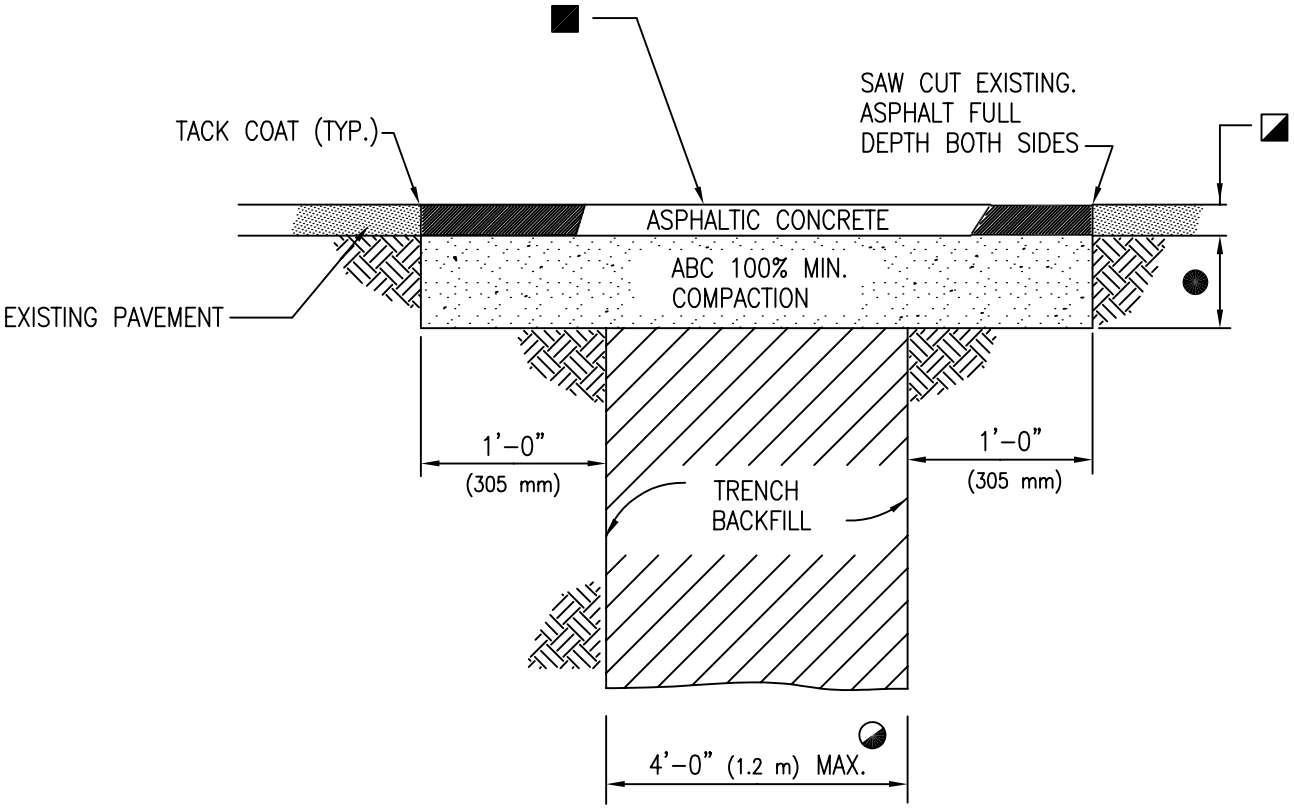

TYPE 1

◐ FOR TRENCH WIDTHS EXCEEDING 4' (1.2 m)
REFER TO TYPE 2 DETAIL, SHEET 2
FOR TRENCH WHERE PORTLAND CEMENT CONCRET (PCC) PAVEMENT EXISTS, REFER TO TYPE 3 DETAIL, SHEET 3

◪ 2" (50 mm) MINIMUM OR THICKNESS OF EXISTING PAVEMENT WHICHEVER IS GREATER

■ BITUMINOUS SURFACE TREATMENT (CHIPSEAL) REQUIRED ONLY FOR LONGITUDINAL TRENCHES WITH WIDTHS GREATER THAN 6' (1.8 m).

● 4" (100 mm) MINIMUM ABC OR THICKNESS OF EXISTING GRANULAR BASE COURSE MATERIALS (E.G. ABC & SELECT MATERIAL) WHICHEVER IS GREATER

REFER TO NOTES SHEET 4 OF 4

ISSUED:		STANDARD DETAIL		DETAIL NO.
1/93	CITY OF TUCSON FOUNDED 1776	TYPE I UTILITY TRENCH PATCH	THE SEAL of PIMA COUNTY ARIZONA	216
REVISED: 7/02				SHEET 1 OF 4

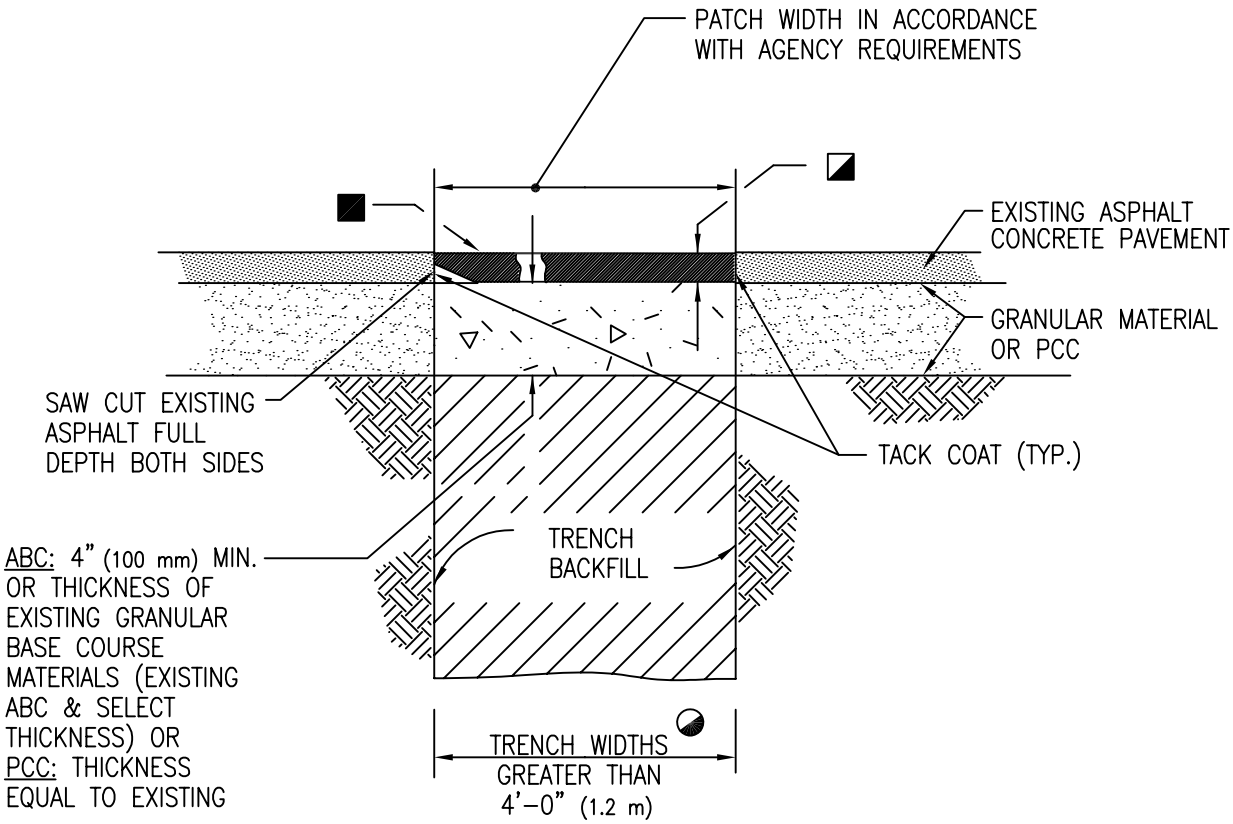

TYPE 2

◔ FOR TRENCH WIDTHS 4' (1.2 m) OR LESS REFER TO TYPE 1 DETAIL, SHEET 1
FOR TRENCH WHERE PORTLAND CEMENT CONCRET (PCC) PAVEMENT EXISTS, REFER TO TYPE 3 DETAIL, SHEET 3

◪ 2" (50 mm) MINIMUM OR THICKNESS OF EXISTING PAVEMENT WHICHEVER IS GREATER

■ BITUMINOUS SURFACE TREATMENT (CHIPSEAL) REQUIRED ONLY FOR LONGITUDINAL TRENCHES WITH WIDTHS GREATER THAN 6' (1.8 m).

REFER TO NOTES SHEET 4 OF 4

ISSUED:		STANDARD DETAIL		DETAIL NO.
1/93	CITY OF TUCSON FOUNDED 1776	TYPE 2 UTILITY TRENCH PATCH	THE SEAL of PIMA COUNTY ARIZONA	216
REVISED 7/02				SHEET 2 OF 4

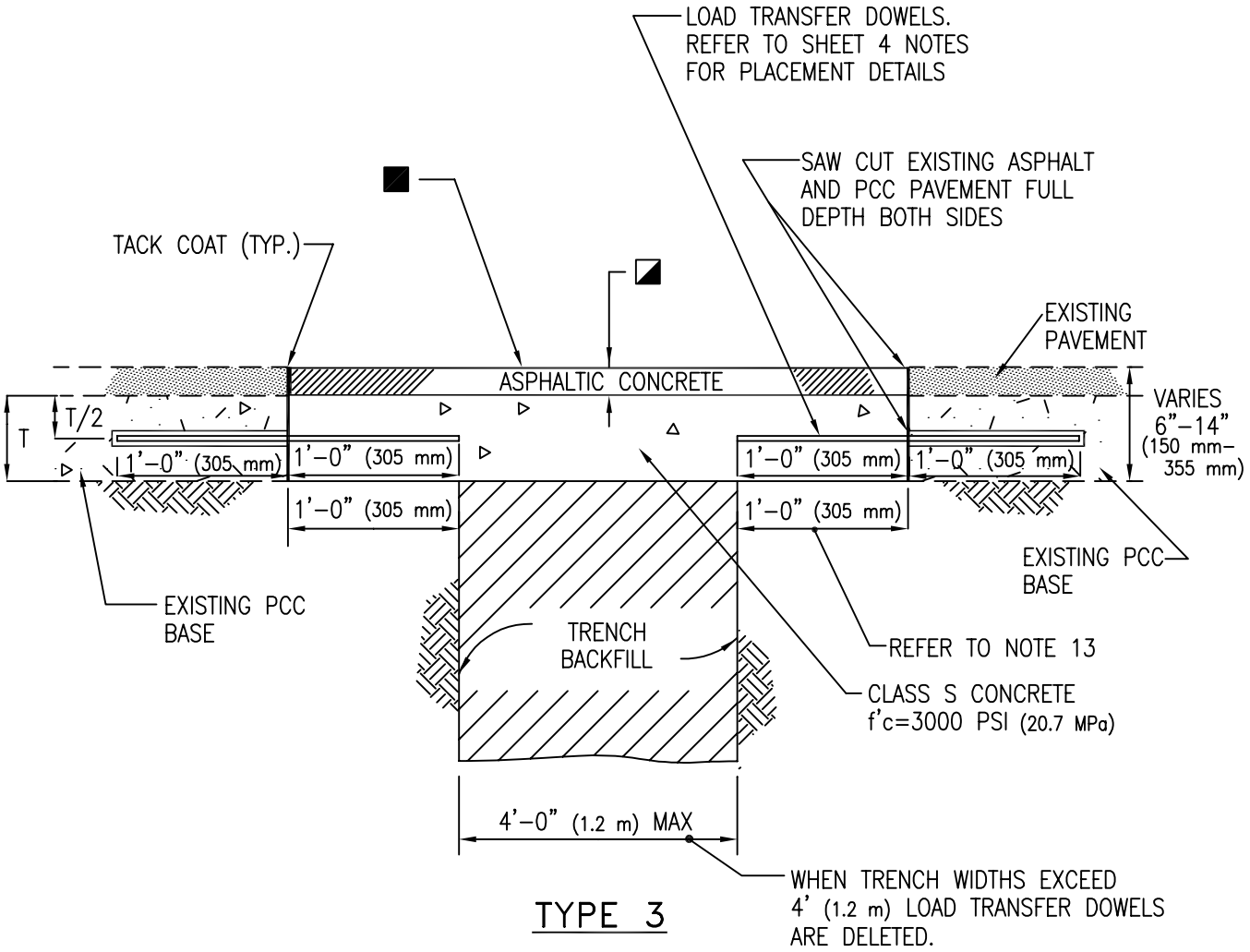

TYPE 3

◪ 2" (50 mm) MINIMUM OR THICKNESS OF EXISTING ASPHALT PAVEMENT WHICHEVER IS GREATER

■ BITUMINOUS SURFACE TREATMENT (CHIP SEAL) REQUIRED ONLY FOR LONGITUDINAL TRENCHES WITH WIDTHS GREATER THAN 6' (1.8 m)

REFER TO NOTES SHEET 4 OF 4

ISSUED:		STANDARD DETAIL		DETAIL NO.
1/93	CITY OF FOUNDED 1776 TUCSON	TYPE 3 UTILITY TRENCH PATCH	THE SEAL of PIMA COUNTY ARIZONA	216
REVISED 7/02				SHEET 3 OF 4

216038.DWG 08/03/00 10:11

NOTES:

1. MATERIAL AND COMPACTION REQUIREMENTS FOR PIPE BEDDING/SHADING SHALL BE IN ACCORDANCE WITH THE SPECIFICATIONS FOR THE APPLICABLE UTILITY PIPE.

2. TRENCH BACKFILL SHALL COMMENCE 1 FOOT (305 mm) ABOVE THE TOP OF PIPE AND SHALL BE PER SECTION 923–2.

3. BACKFILL COMPACTION REQUIREMENTS SHALL BE PER SECTION 923–3.07.

4. THE 1 FOOT (305 mm) TRENCH "SHOULDER" AREAS SHALL BE DELETED FOR TYPE 2 TRENCHES.

5. ABC SHALL BE IN ACCORDANCE WITH THE REQUIREMENTS OF SECTION 303–2.

6. PORTLAND CEMENT CONCRETE SHALL BE IN ACCORDANCE WITH THE REQUIREMENTS OF SECTION 1006.

7. ASPHALTIC TACK MATERIAL SHALL BE IN ACCORDANCE WITH THE REQUIREMENTS OF SECTION 1005

8. ASPHALTIC CONCRETE SHALL BE IN ACCORDANCE WITH THE REQUIREMENTS OF SECTION 406 FOR THE TYPE SPECIFIED.

9. BITUMINOUS SURFACE TREATMENT (CHIP SEAL) SHALL BE IN ACCORDANCE WITH THE REQUIREMENTS OF SECTION 404 FOR THE TYPE SPECIFIED.

10. LOAD TRANSFER DOWELS FOR JOINTS TRANSVERSE TO THE ROADWAY CENTERLINE SHALL BE SMOOTH STEEL DOWELS IN ACCORDANCE WITH THE REQUIREMENTS OF SECTION 1003. DOWELS SHALL BE SIZED AND SPACED AS FOLLOWS:

PCCP THICKNESS	DOWEL SIZE	DOWEL LENGTH	DOWEL SPACING
6" (150 mm)	#5 (NO. 16)	12" (305 mm)	18" (455 mm)
7" (180 mm)	#6 (NO. 19)	15" (380 mm)	15" (380 mm)
8" (205 mm)	#8 (NO. 25)	15" (380 mm)	12" (305 mm)
10" (255 mm) AND UP	#10 (NO. 32)	15" (380 mm)	12" (305 mm)

11. DEFORMED TIE BARS SHALL BE USED IN TRENCH PATCHES LONGITUDINAL TO THE ROADWAY CENTERLINE WHEN THE TRENCH LENGTH IS GREATER THAN 50 FEET (15.2 m). TIE BARS SHALL BE 24 INCHES (610 mm) LONG. DEFORMED #4 (NO. 13) BARS FOR PCCP LESS THAN 8 INCHES (205 mm) THICK AND #5 (NO. 16) BARS IF 8 INCHES (205 mm) THICK OR MORE. TIE BARS SHALL BE PLACED 30 INCHES (760 mm) CENTER–TO–CENTER.

12. HOLES SHALL BE DRILLED 1 FOOT (305 mm) INTO THE EXISTING SLAB FOR TIE BARS AND 7 INCHES (180 mm) FOR DOWELS. HOLES SHALL BE OF A DIAMETER SUFFICIENT TO ACCOMMODATE THE TIE BAR ANCHORAGE OR DOWEL CAP. TIE BARS SHALL BE ANCHORED WITH AN APPROVED HIGH VISCOSITY EPOXY.

13. IF THE CONCRETE SLAB REMAINING NEXT TO A LONGITUDINAL OR TRANSVERSE JOINT IS LESS THAN 6 FEET (1.8 m) AT ITS NARROWEST WIDTH, REMOVE AND REPLACE THE EXISTING CONCRETE TO THE JOINT.

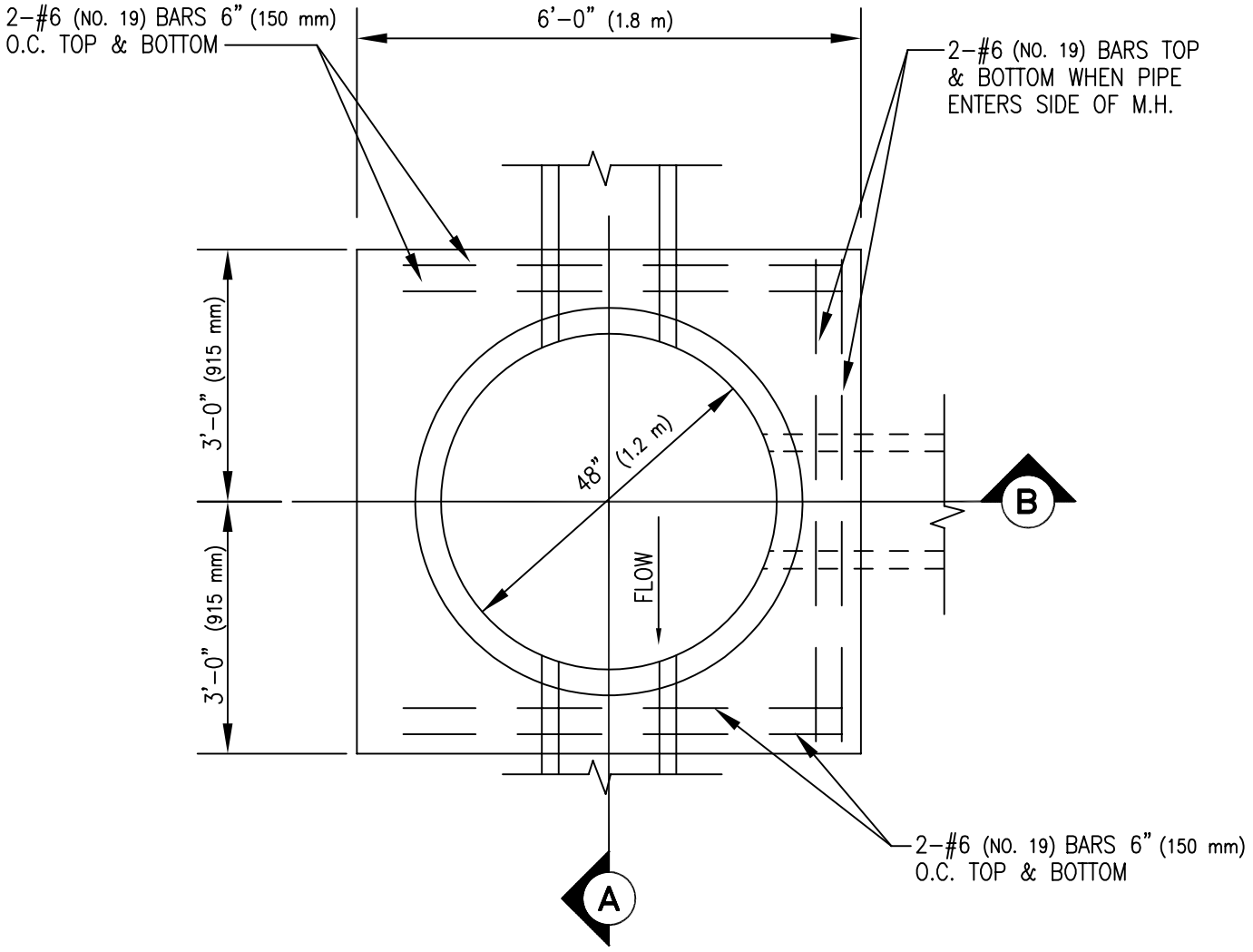

PLAN

NOTES:

1. ALL CONCRETE SHALL BE CLASS "S", 3000 PSI (20.7 MPa).
2. MATCH SPRING LINES OF PIPES ENTERING M.H. UNLESS OTHERWISE NOTED.
3. CUT PIPES TO ALLOW SETTING OF 4' (1.2 m) DIA. CYLINDRICAL FORM FROM 6" (150 mm) ABOVE MAIN LINE PIPE TO SPRING LINE. CUT PIPE 2" (50 mm) LARGER THAN FORM TO ALLOW 2" (50 mm) CONCRETE OVER ENDS OF ALL CUT PIPE.
4. INVERT AND BASE OF M.H. TO BE POURED AND INVERT TO BE SHAPED BY HAND TO MAKE SMOOTH TRANSITION. FINISH WITH RUBBER FLOAT.
5. CENTER M.H. ON PIPE JOINT WHERE PIPE CHANGES SIZES, LEAVING A GAP OF 12" (305 mm) MIN., 24" (610 mm) MAXIMUM.
6. ALL REINFORCING STEEL SHALL HAVE 1–1/2" (40 mm) OF COVER, UNLESS SHOWN OTHERWISE.
7. MANHOLE STATIONING SHALL BE TO THE CENTER OF THE MANHOLE BASE.

ISSUED:		STANDARD DETAIL		DETAIL NO.
10/88	CITY OF TUCSON FOUNDED 1776	STORM DRAIN MANHOLE BASE (48"Ø AND SMALLER)	THE SEAL of PIMA COUNTY ARIZONA	300
REVISED: 7/02				SHEET 1 OF 2

30001B.DWG 08/03/00 10:30

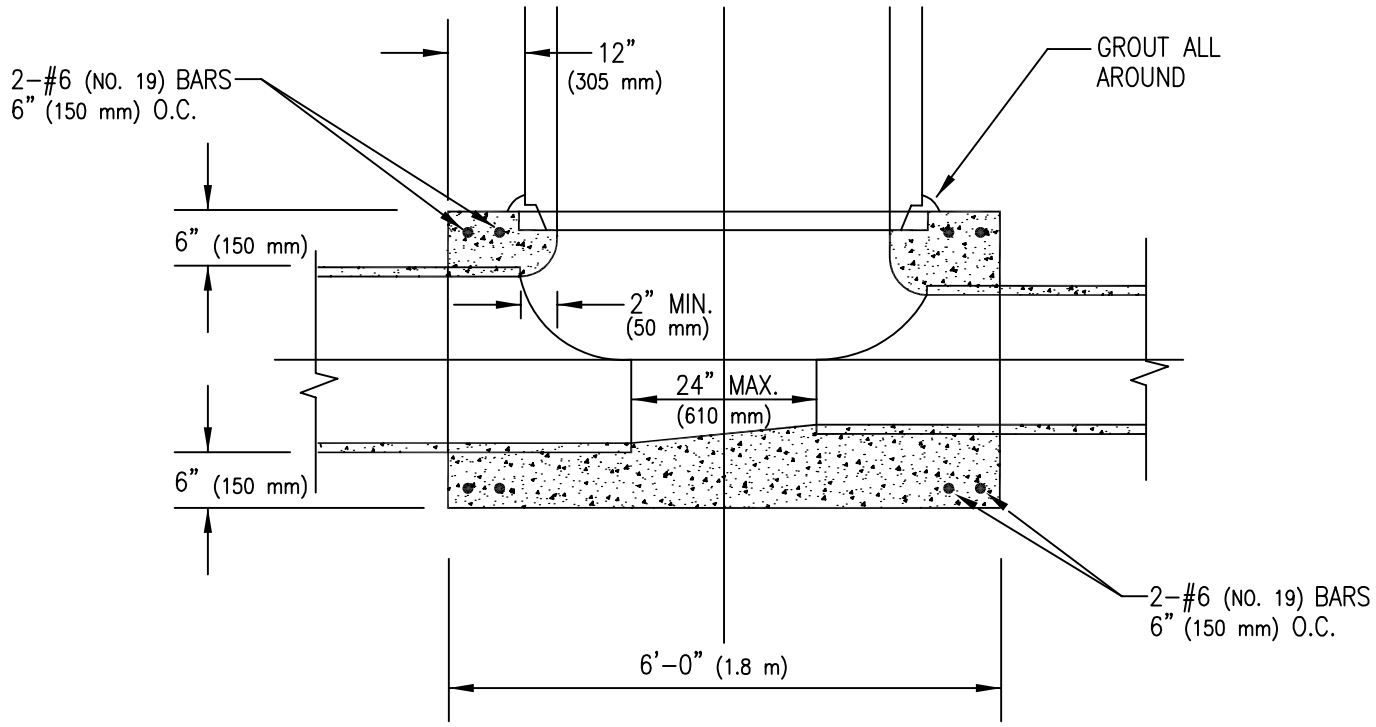

A SECTION

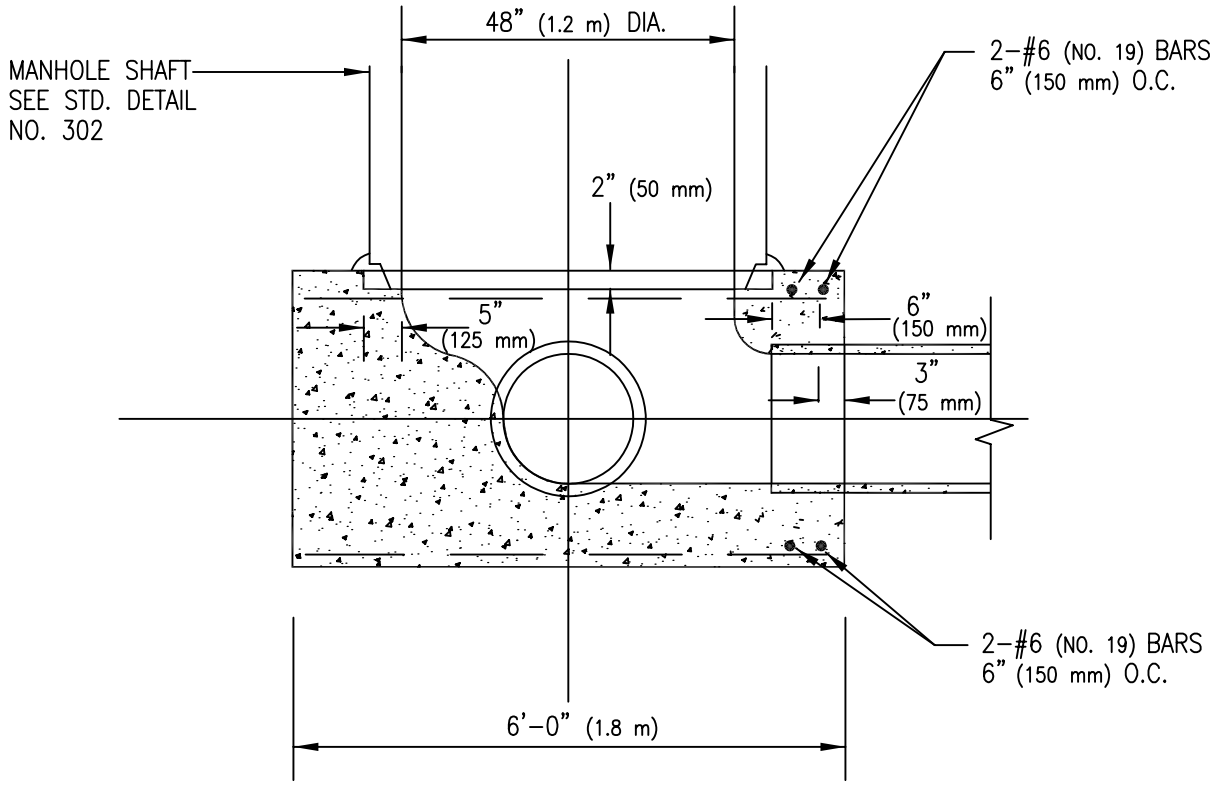

B SECTION

ISSUED:		STANDARD DETAIL		DETAIL NO.
10/88		STORM DRAIN MANHOLE BASE (48"Ø AND SMALLER)		300
REVISED:				
7/02				SHEET 2 OF 2

30002B.DWG 08/03/00 10:57

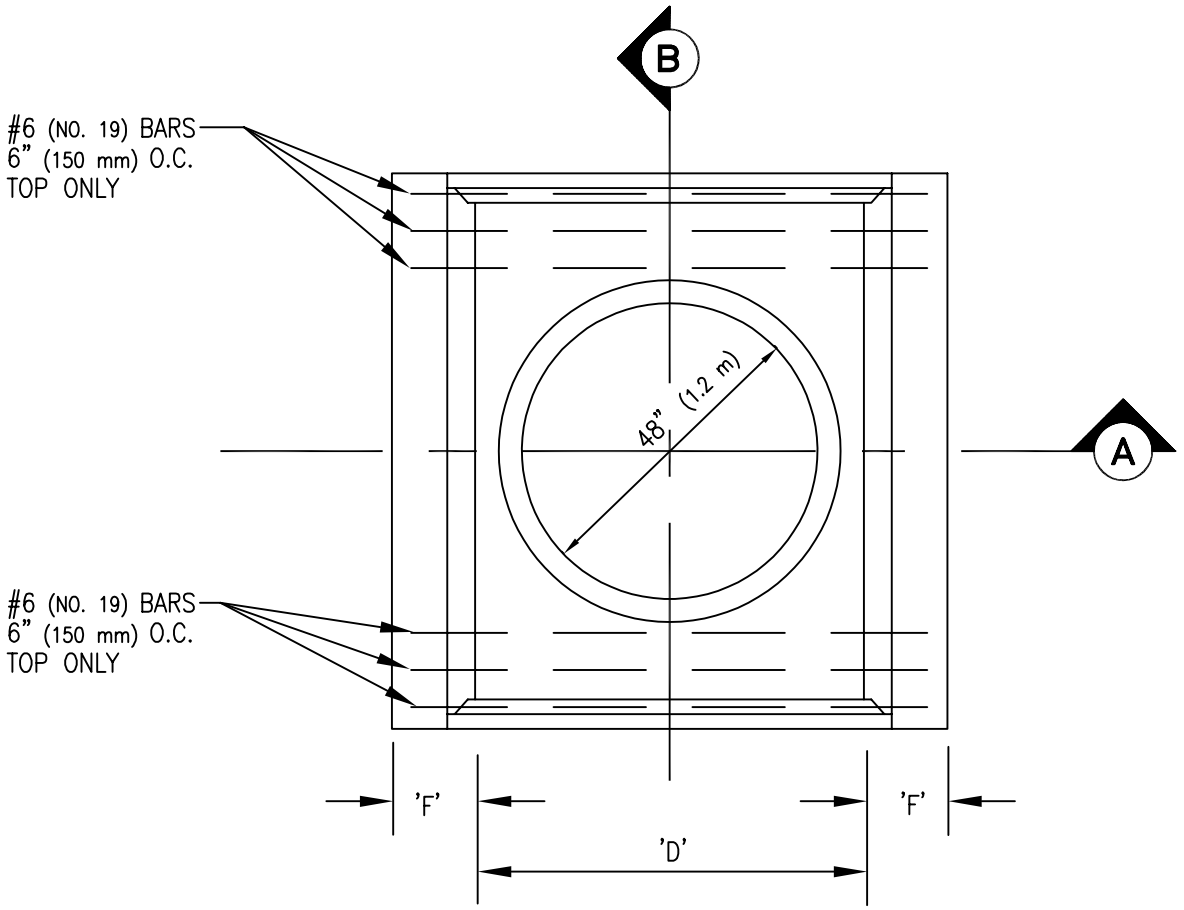

PLAN

TABLE OF VALUES FOR 'F'

'D'	51" (1.3 m)	54" (1.37 m)	57" (1.45 m)	60" (1.52 m)	63" (1.6 m)	66" (1.67 m)	69" (1.75 m)	72" (1.83 m)	78" (1.9 m)	84" (1.97 m)	90" (2.05 m)	96" (2.12 m)
'F'	13-3/4" (343 mm)	14-1/2" (368 mm)	15" (380 mm)	15-1/2" (393 mm)	16-1/4" (411 mm)	16-3/4" (424 mm)	17-1/2" (443 mm)	18" (455 mm)	19-1/4" (491 mm)	20-1/2" (523 mm)	21-3/4" (554 mm)	23" (585 mm)

NOTES:

1. ALL CONCRETE SHALL BE CLASS "S", 3000 PSI (20.7 MPa).
2. PIPE & VERTICAL STUB MAY BE CAST MONOLITHICALLY OR STUB MAY BE CAST ON TO LINE PIPE SECTION PRIOR TO COMPLETE CURING.
3. ALL PIPE REINFORCEMENT SHALL BE TURNED UP INTO VERTICAL STUB.
4. THE VERTICAL PIPE SEGMENT FORMING THE MANHOLE SHAFT SHALL CONFORM TO THE REQUIREMENTS OF A.S.T.M. C-478. THE HORIZONTAL PIPE SHALL BE EQUAL IN STRENGTH TO THE PIPE ENTERING MANHOLE.
5. ALL REINFORCING STEEL SHALL HAVE A MINIMUM OF 1-1/2" (40 mm) OF COVER, UNLESS SHOWN OTHERWISE.

ISSUED:		STANDARD DETAIL		DETAIL NO.
10/88	CITY OF TUCSON FOUNDED 1776	STORM DRAIN MANHOLE BASE (51"Ø AND LARGER)	THE SEAL of PIMA COUNTY ARIZONA	301
REVISED: 7/02				SHEET 1 OF 2

301018.DWG 08/03/00 11:02

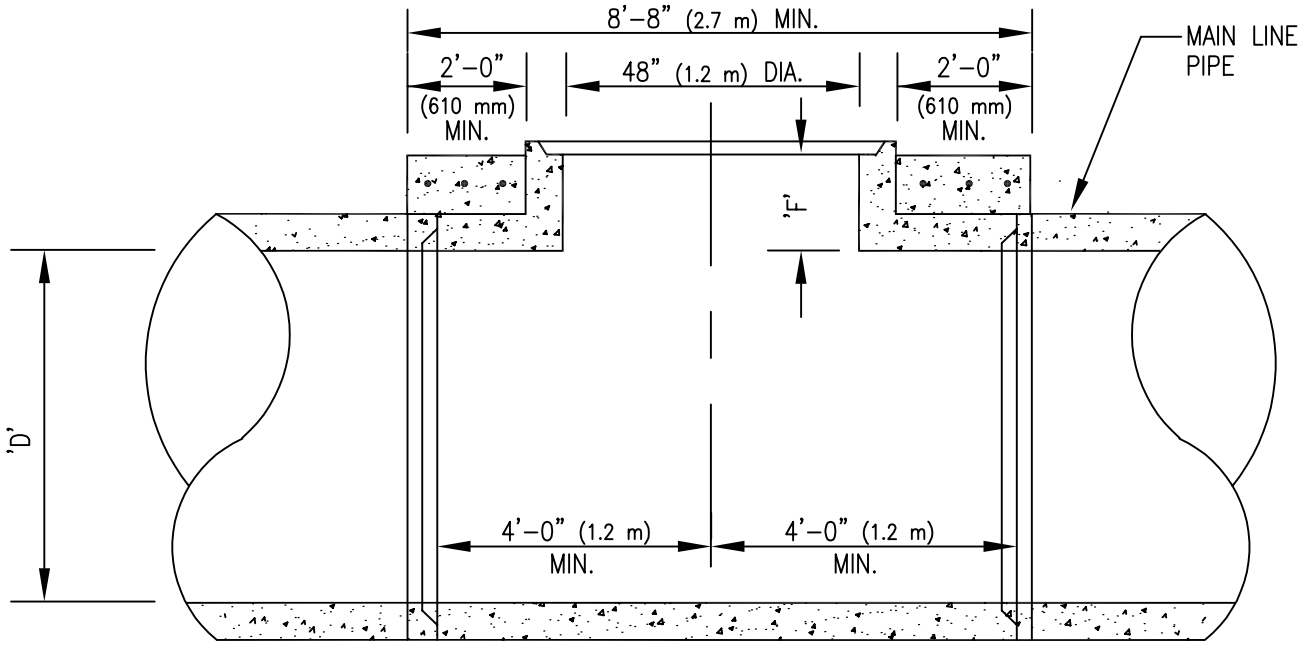

B SECTION

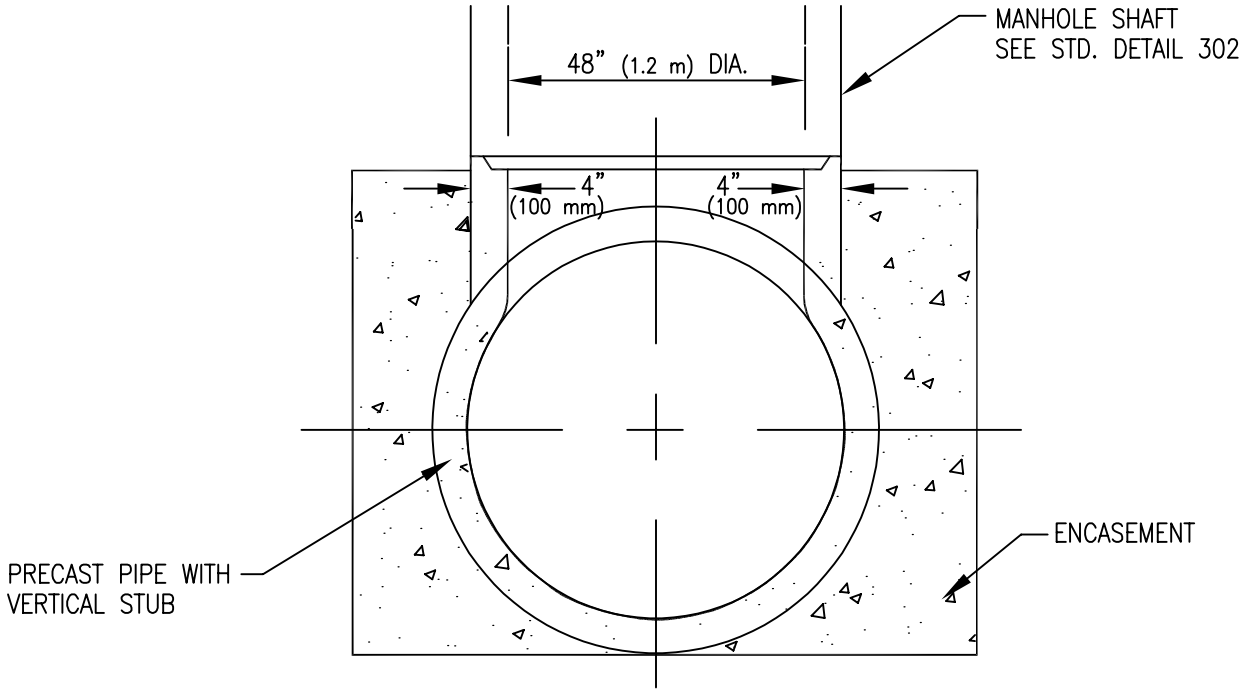

A SECTION

ISSUED:	CITY OF FOUNDED 1776 TUCSON	STANDARD DETAIL	THE SEAL of PIMA COUNTY ARIZONA	DETAIL NO.
10/88		STORM DRAIN MANHOLE BASE (51"Ø AND LARGER)		301
REVISED:				
7/02				SHEET 2 OF 2

301028.DWG 08/03/00 11:04

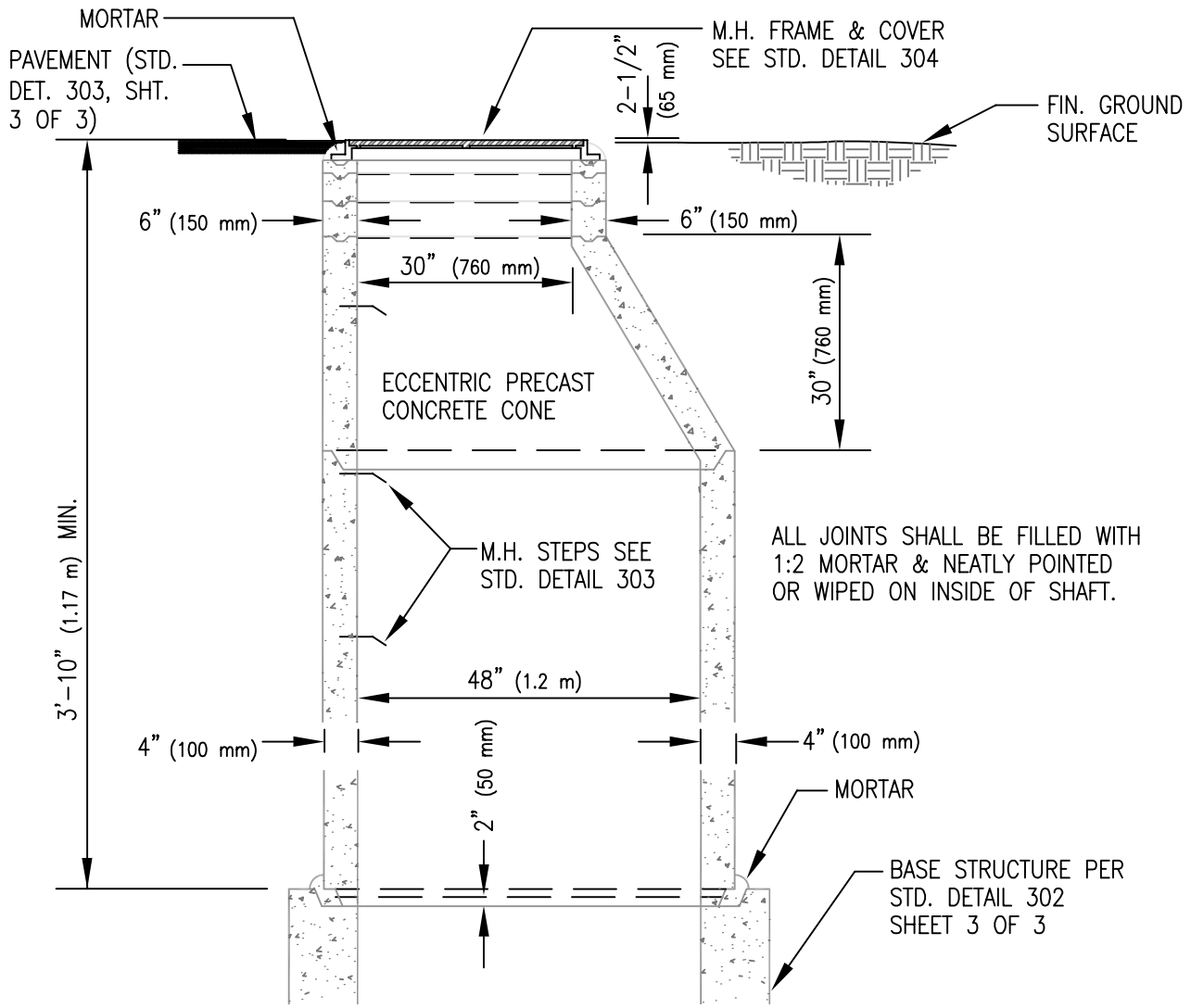

VERTICAL SECTION OF ECCENTRIC MANHOLE SHAFT

NOTES:

1. ALL CONCRETE SHALL BE CLASS "S", 3000 PSI (20.7 MPa).
2. MORTAR SHALL CONFORM TO THE REQUIREMENTS OF SUBSECTION 503-2.03 OF THE STANDARD SPECIFICATIONS.
3. PRECAST CONCRETE CONES AND SECTIONS SHALL MEET A.S.T.M. C-478 STANDARDS.
4. ALL REINFORCING STEEL SHALL HAVE 1-1/2" (40 mm) OF COVER UNLESS SHOWN OTHERWISE.
5. 48" (1.2 m) DIAMETER PRECAST CONCRETE PIPE MAY BE FURNISHED IN STANDARD LENGTHS.
6. UNLESS OTHERWISE SHOWN ON PLANS, USE 2, 2-1/2" (65 mm) PRECAST CONCRETE ADJUSTING RINGS ON IMPROVED STREETS & 4, 2-1/2" (65 mm) RINGS ON UNIMPROVED STREETS.

ISSUED:		STANDARD DETAIL		DETAIL NO.
10/88	CITY OF TUCSON FOUNDED 1776	STORM DRAIN MANHOLE	THE SEAL of PIMA COUNTY ARIZONA	302
REVISED: 7/02				SHEET 1 OF 3

30201B.DWG 08/03/00 11:08

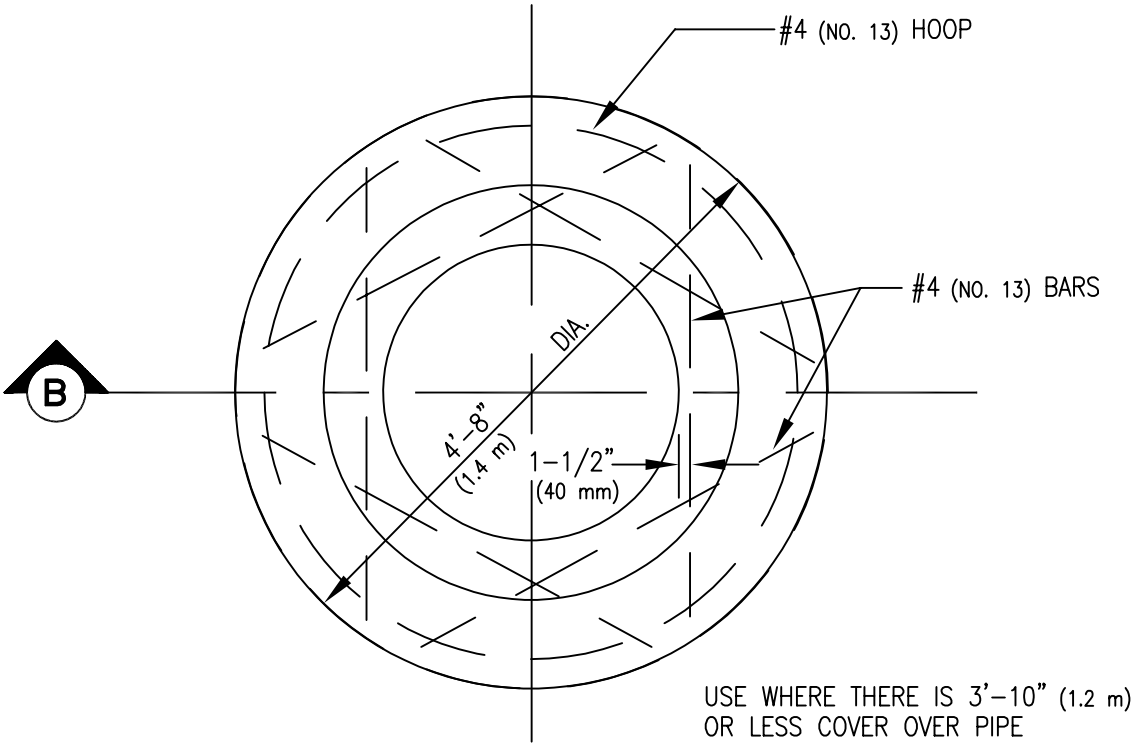

PLAN

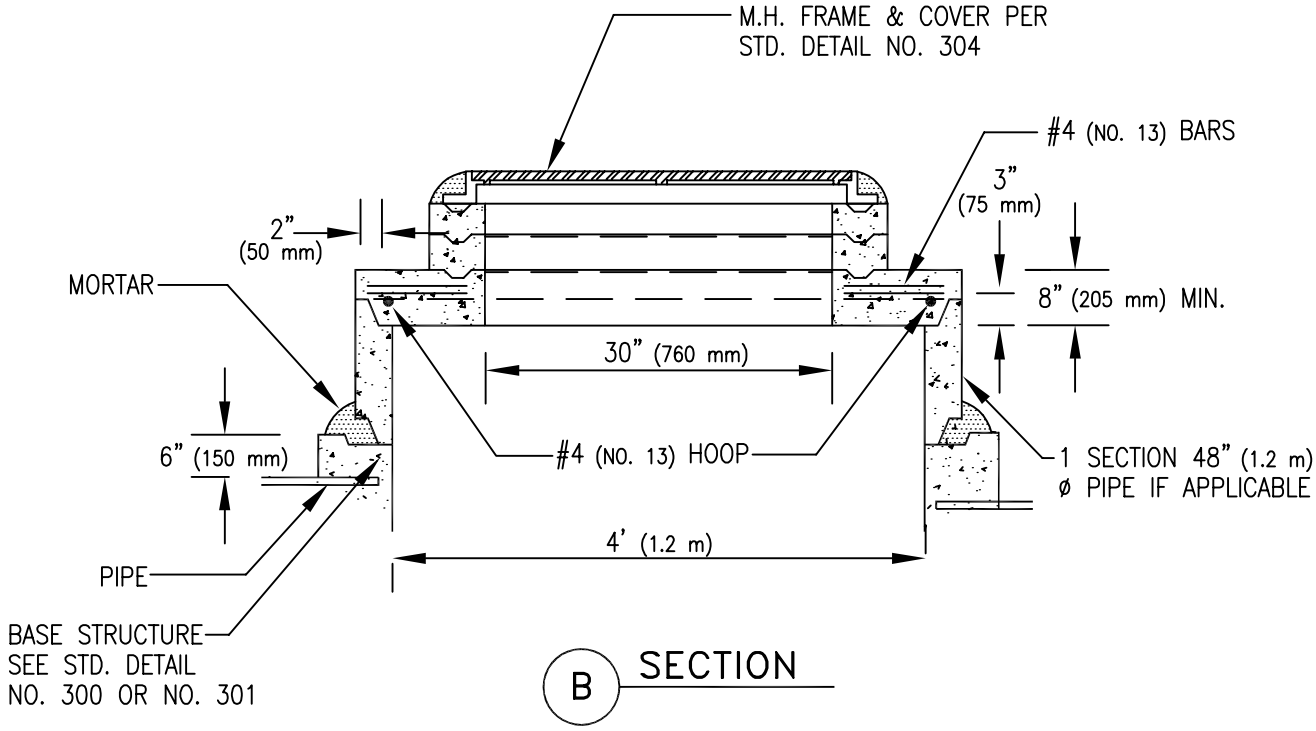

SHALLOW MANHOLE

ISSUED:		STANDARD DETAIL		DETAIL NO.
10/88		STORM DRAIN MANHOLE		302
REVISED:				
7/02				SHEET 2 OF 3

302028.DWG 06/03/00 11:14

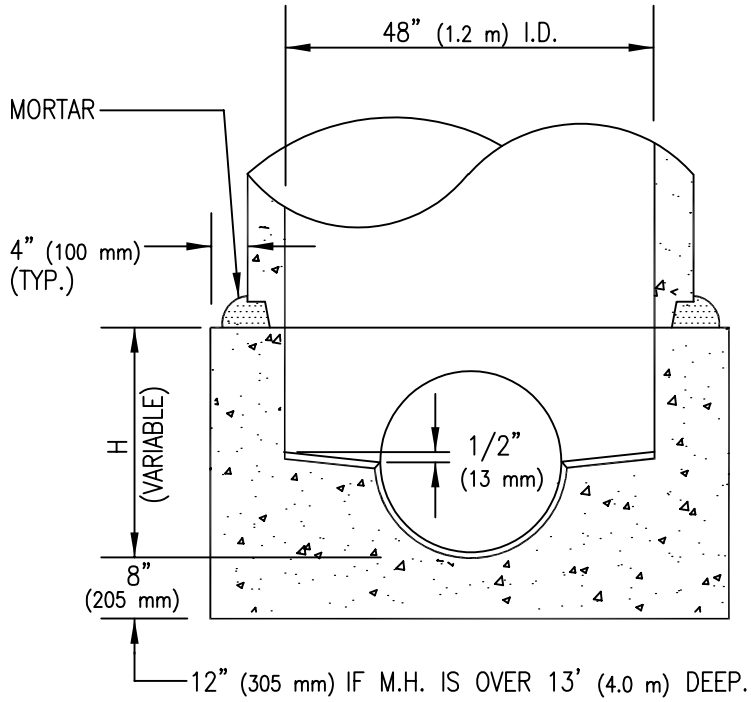

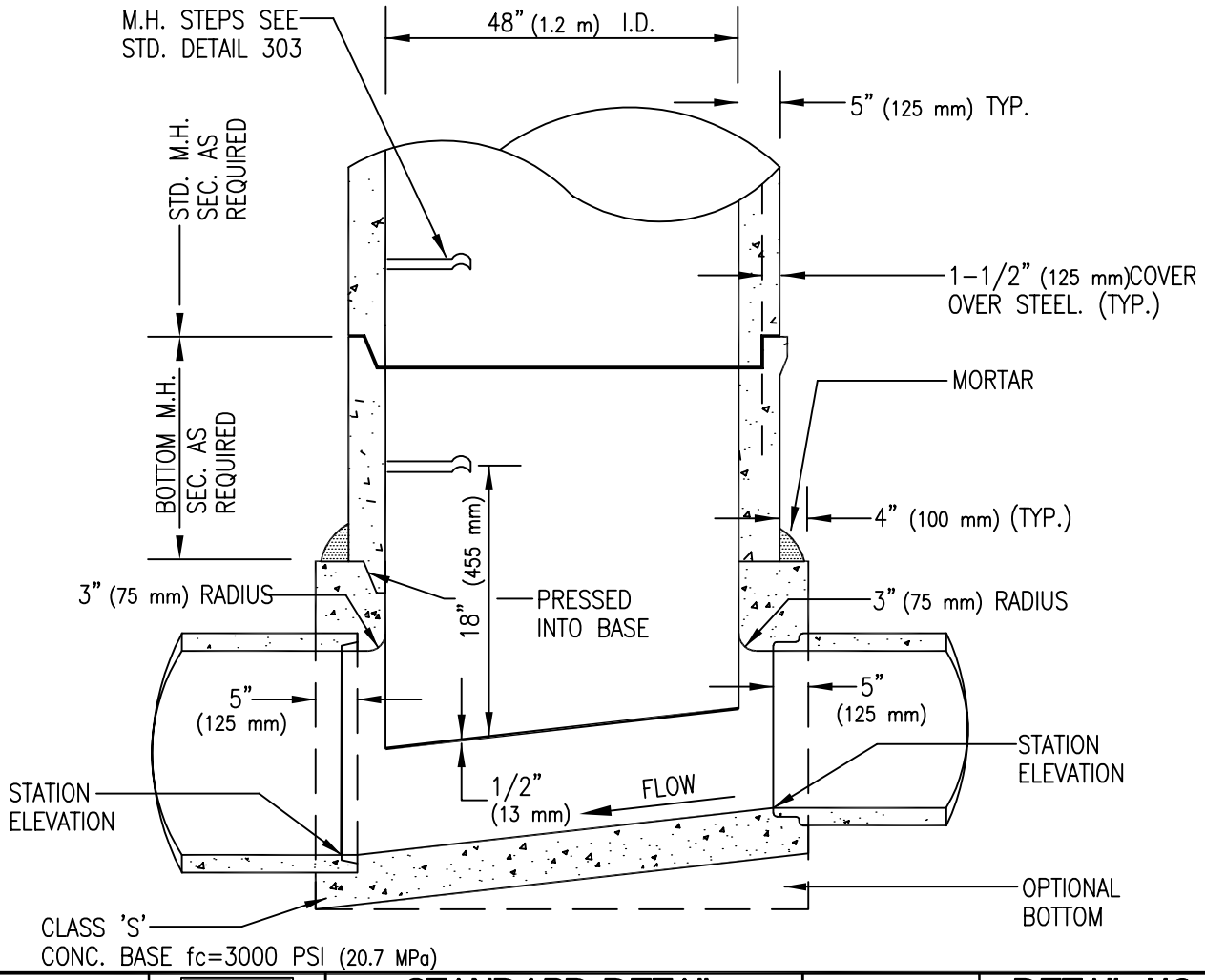

ISSUED:		STANDARD DETAIL		DETAIL NO.
10/88	CITY OF TUCSON FOUNDED 1776	STORM DRAIN MANHOLE	THE SEAL of PIMA COUNTY ARIZONA	302
REVISED: 7/02				SHEET 3 OF 3

302038.DWG 08/03/00 11:18

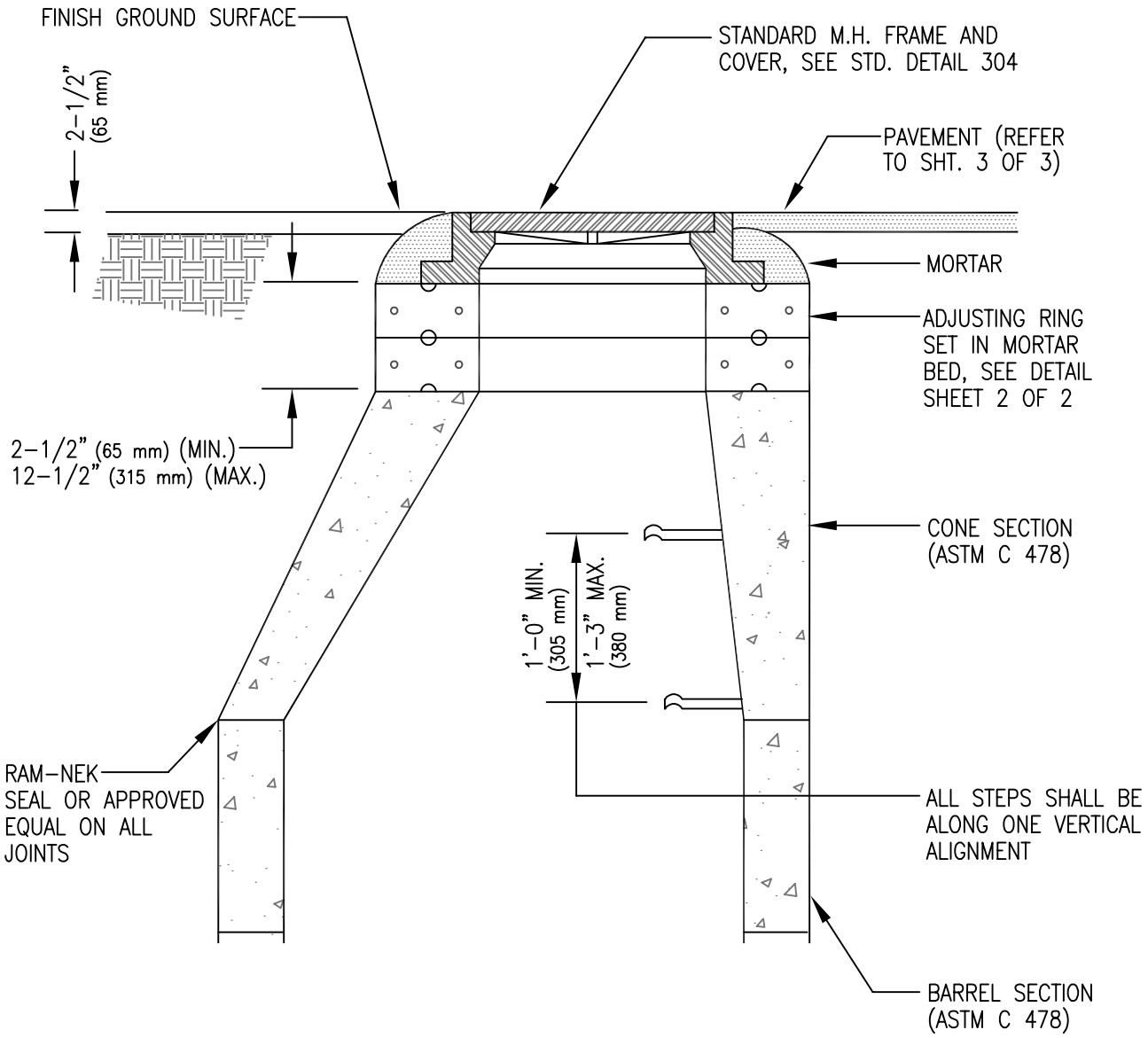

NOTES:

1. STEPS FOR MANHOLES SHALL BE OF STEEL REINFORCED POLYPROPYLENE PLASTIC, M.A. INDUSTRIES, INC., NO. PS-3 OR AN APPROVED EQUAL AND INSTALLED PER THE MANUFACTURER'S RECOMMENDATIONS.

2. RECONSTRUCTION OF THE BARREL/CONE IN ACCORDANCE WITH THIS DETAIL WILL BE REQUIRED IF THE REQUIRED AMOUNT OF ADJUSTMENT CAUSES A VIOLATION OF THE DIMENSIONAL RANGE NOTED ABOVE.

3. STEPS FOR PRECAST CONCRETE MANHOLES SHALL BE CAST INTO THE CONCRETE WALL DURING MANUFACTURE OR MORTARED, WITH NON-SHRINK GROUT, INTO HOLES AFTER CONCRETE HAS SET, AND PRIOR TO DELIVERY TO THE JOB SITE.

4. STEPS SHALL BEGIN 2' (610 mm) BELOW FINISH GRADE. STEPS SHALL END 1'-6" (455 mm) (MAX.) ABOVE SHELF.

5. ALL STEPS WITHIN A MANHOLE SHALL BE ALIGNED VERTICALLY.

ISSUED:		STANDARD DETAIL		DETAIL NO.
10/88	CITY OF TUCSON FOUNDED 1776	STORM DRAIN MANHOLE HEIGHT ADJUSTMENT	THE SEAL of PIMA COUNTY ARIZONA	303
REVISED: 7/02				SHEET 1 OF 3

303301B.DWG 08/03/00 11:20

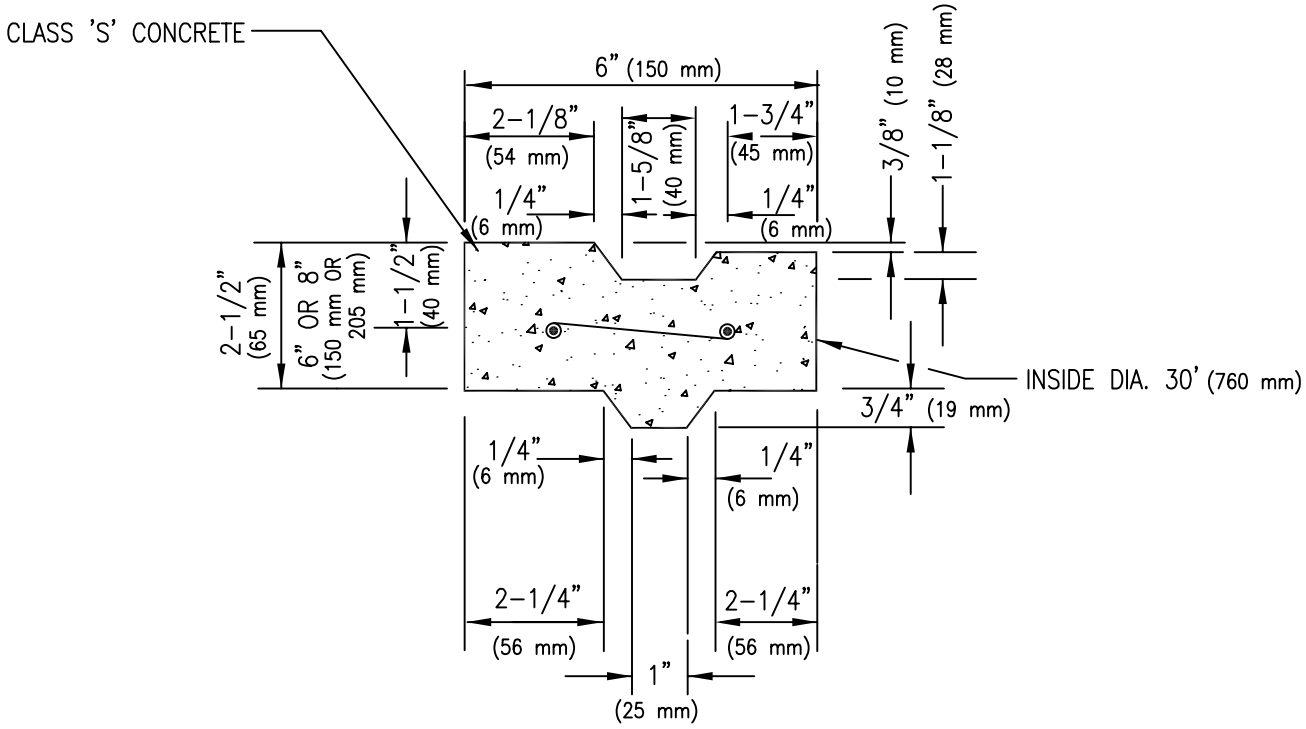

2-1/2" (65 mm) RINGS SHALL BE REINFORCED WITH TWO 1/4" (6 mm) ROUND STEEL HOOPS; 6" (150 mm) AND 8" (205 mm) RINGS SHALL BE REINFORCED WITH FOUR 1/4" (6 mm) HOOPS, TIED WITH NO. 14 A. S. & W. GAUGE WIRE 8" (205 mm) C. TO C.

NOTES:

1. ALL CONCRETE SHALL BE CLASS "S" 3000 PSI (20.7 MPa).
2. ALL REINFORCING STEEL SHALL CLEAR FACE OF CONCRETE BY 1-1/2" (40 mm), UNLESS SHOWN OTHERWISE.
3. PRECAST CONCRETE CONES AND SECTIONS TO BE A.S.T.M. C 478.

ISSUED:		STANDARD DETAIL		DETAIL NO.
10/88	CITY OF TUCSON FOUNDED 1776	STORM DRAIN MANHOLE HEIGHT ADJUSTMENT	THE SEAL of PIMA COUNTY ARIZONA	303
REVISED: 7/02				SHEET 2 OF 3

303028.DWG 08/03/00 16:02

MORTAR AND FOUR STEEL SPACERS, 4"x2" (100 mm x 50 mm), 1/2" (13 mm) TO 2 1/2" (65 mm) WHEN THICKNESS IS LESS THAN 1/2"(13 mm). USE MORTAR ONLY WHEN GREATER THAN 2 1/2"(65 mm). USE REINFORCED CONCRETE ADJUSTMENT RINGS PER STD. DET. 303, SHT. 2 OF 3.

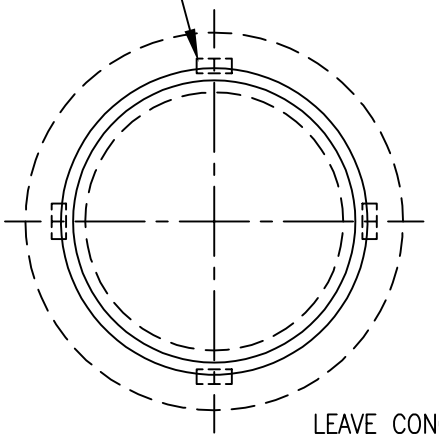

LEAVE CONCRETE COLLAR LOW AND FINISH WITH ASPHALTIC MIX NO. 2, PER STD. SPEC. 406. MIN. THICKNESS 3/4"(19 mm) MAX 1 1/4" (32 mm) .

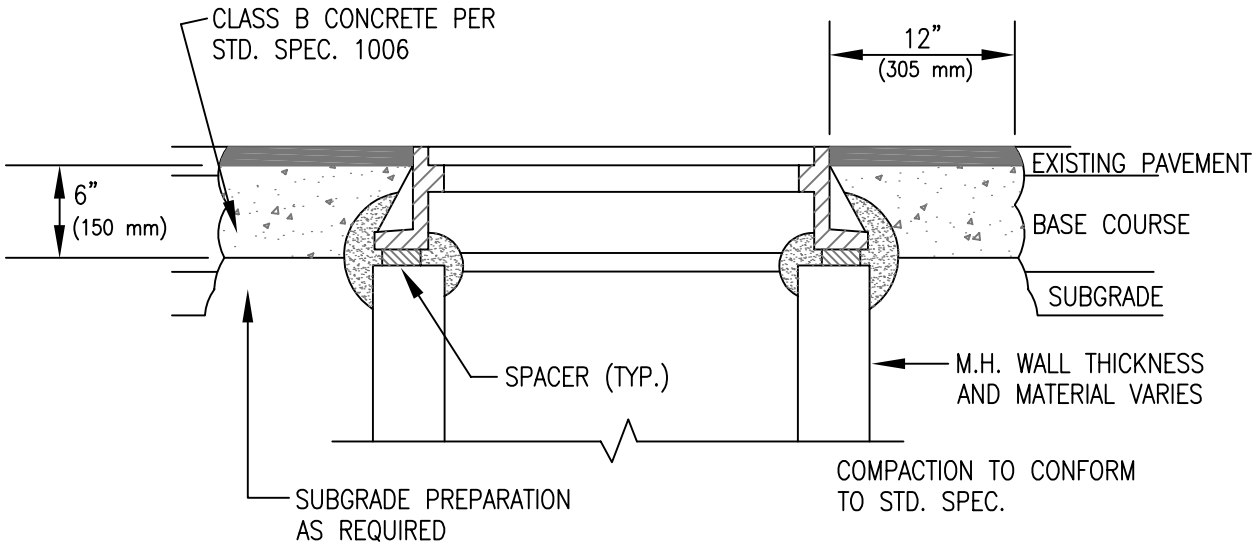

NOTES:

M.H. FRAME AND COVER PER STD. SPEC 505 OR 512

ISSUED:		STANDARD DETAIL		DETAIL NO.
10/88	CITY OF TUCSON FOUNDED 1776	STORM DRAIN MANHOLE HEIGHT ADJUSTMENT	THE SEAL of PIMA COUNTY ARIZONA	303
REVISED: 7/02				SHEET 3 OF 3

303028.DWG 08/03/00 16:02

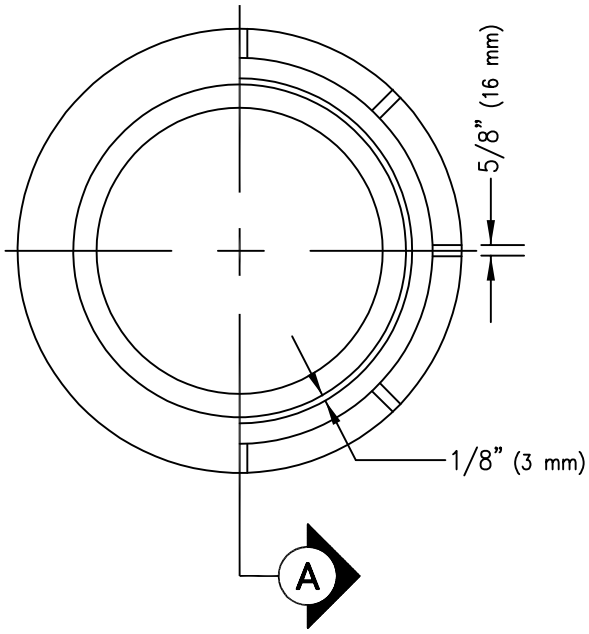

FRAME, PLAN VIEW

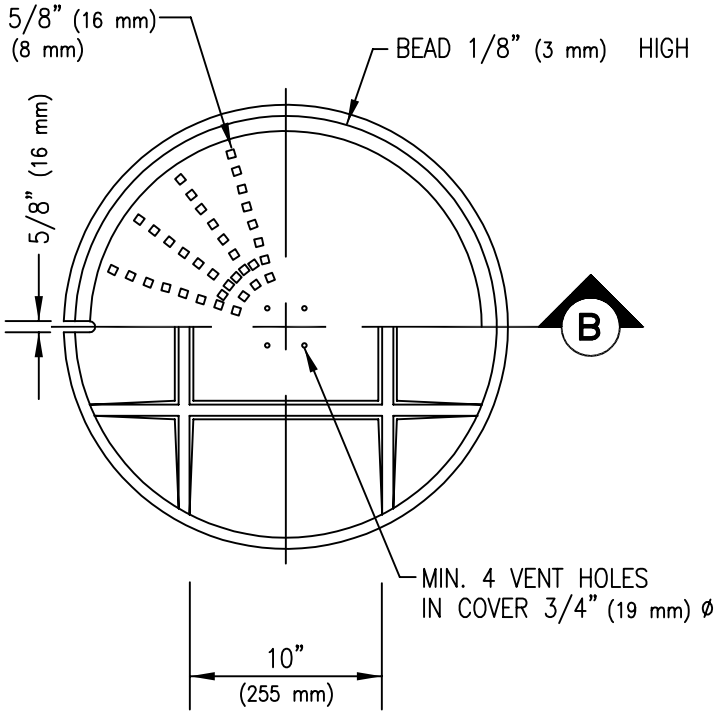

COVER, PLAN VIEW

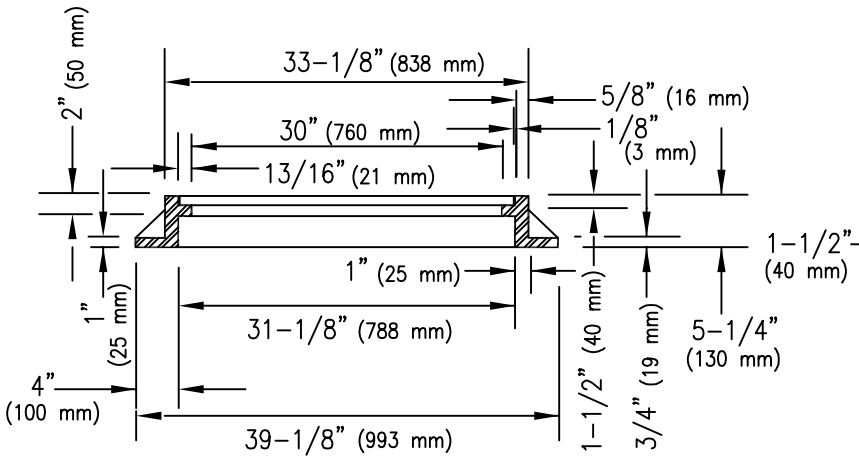

A FRAME SECTION

APPROX. WT. 300 LBS. (135 kg)

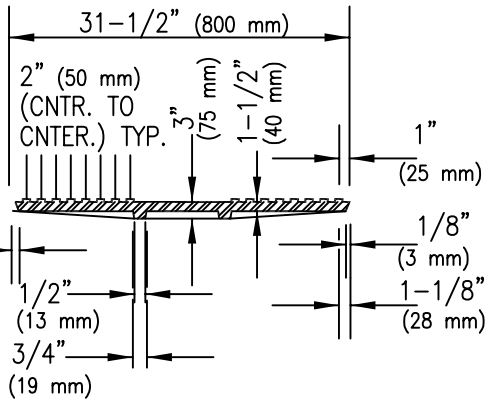

A COVER SECTION

APPROX. WT. 330 LBS. (150 kg)

ISSUED:		STANDARD DETAIL		DETAIL NO.
10/88	CITY OF TUCSON FOUNDED 1776	STORM DRAIN MANHOLE FRAME AND COVER	THE SEAL of PIMA COUNTY ARIZONA	304
REVISED: 7/02				SHEET 1 OF 2

30401B.DWG 08/03/00 11:25

NOTES

1. MINIMUM LOADING: H 20.
2. ALL COVERS TO CARRY THE LETTERS "SD". LETTERS SHALL BE RAISED 5/16" (8 mm) AND SHALL BE 2-1/2" (65 mm) HIGH.
3. DETAILS SHOWN ARE TYPICAL.
4. THE TOP SURFACE OF THE COVER AND FRAME SHALL BE FLUSH AND THERE SHALL BE 1/8" (3 mm) CLEARANCE ALL AROUND BETWEEN FRAME AND COVER.

ISSUED:		STANDARD DETAIL		DETAIL NO.
10/88	CITY OF TUCSON FOUNDED 1776	STORM DRAIN MANHOLE FRAME AND COVER	THE SEAL of PIMA COUNTY ARIZONA	304
REVISED: 7/02				SHEET 2 OF 2

30402B.DWG 08/03/00 11:25

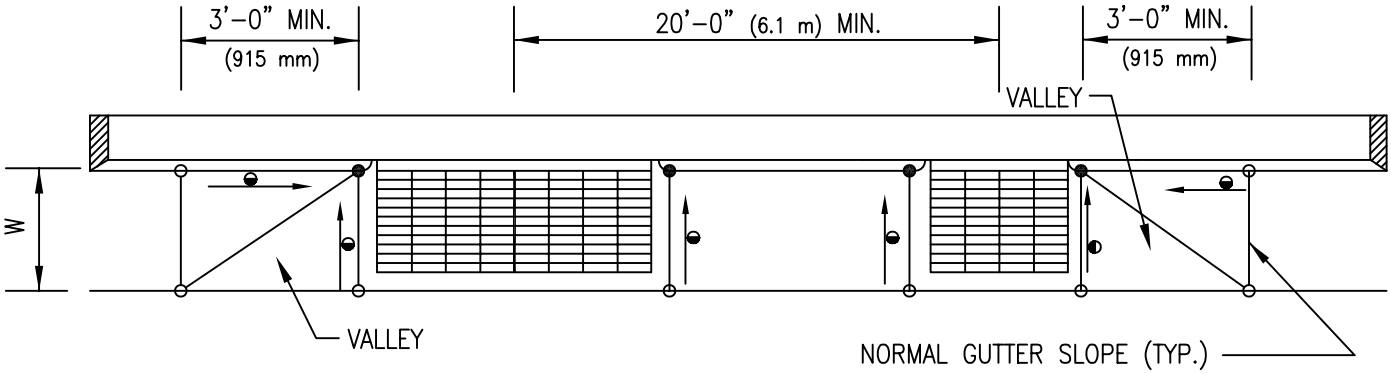

TYPES 1, 4 AND 5

NOTE: WHEN SLOTTED DRAINS ARE USED IN CONJUNCTION WITH CATCH BASINS, MODIFY SLOPE OF GRATE TO MATCH THE GUTTER SLOPE.

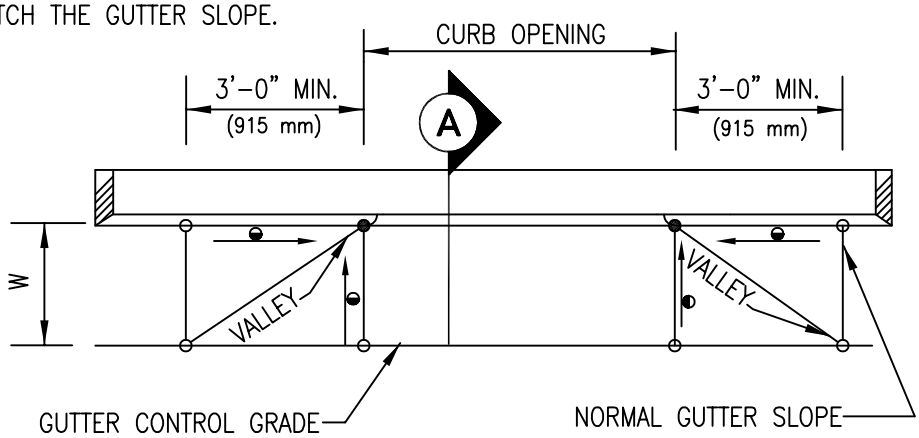

TYPE 3

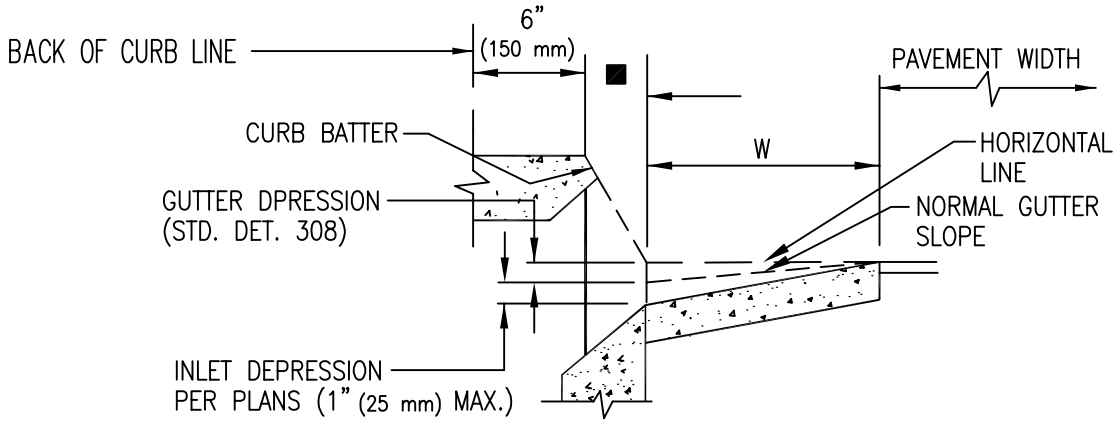

A SECTION

LEGEND

GUTTER DEPRESSION: 3" (75 mm) MAX. SEE SECTION A THIS SHEET.

○ = NORMAL PAVEMENT OR GUTTER FLOW LINE ELEVATION

● = DEPRESSION ELEVATION

◒ = STRAIGHT GRADE WITH DOWNWARD SLOPE

W = NORMAL GUTTER WIDTH PER STD. DET. 209
16" (405 mm) IF NO CONCRETE GUTTER.

■ = 2-1/2" (65 mm) FOR TYPE 1 AND 1(G) CURB; VARIES WITH CURB REVEAL FOR TYPE 2 CURB (STD. DET. 209)

ISSUED:		STANDARD DETAIL		DETAIL NO.
10/88	CITY OF TUCSON FOUNDED 1776	CATCH BASIN GUTTER DEPRESSION AND SPACING	THE SEAL of PIMA COUNTY ARIZONA	305
REVISED: 7/02				SHEET 1 OF 1

305B.DWG 08/03/00 11:26

NOTES:

1. PIPES CAN BE PLACED IN ANY WALL, EXCEPT WHEN WALL IS ADJACENT TO A WING BASIN.
2. SUMP FLOOR SHALL HAVE A WOOD TROWEL FINISH AND A MINIMUM SLOPE OF 4:1 IN ALL DIRECTIONS TOWARDS OUTLET PIPE.
3. ALL STRUCTURAL STEEL SHALL BE IN ACCORDANCE WITH ASTM A 36.
4. GUTTER DEPRESSION SHALL BE WARPED TO OPENING ACCORDING TO STD. DETAIL 305.
5. ALL CONCRETE SHALL BE CLASS "B", 2,500 PSI (17.2 MPa)
6. NOSE ANGLE, FRAME, GRATE AND BEAM SHALL BE GIVEN ONE SHOP COAT OF PAINT NO. 1 CONFORMING TO THE REQUIREMENTS OF SECTION 1002 OF THE STD. SPECS.
7. WELDING SHALL CONFORM TO STD. WELDING SPECIFICATIONS.
8. CONSTRUCTION JOINTS AND DRAINS SHALL BE PLACED TO MEET FIELD CONDITIONS. WHEN USED, CONSTRUCTION JOINTS SHALL BE A MINIMUM OF 6 INCHES (150 mm) ABOVE THE FINISH FLOOR OF THE CATCH BASIN AND A MINIMUM OF 6 INCHES (150 mm) BELOW FINISH GRADE OF THE GRATE OPENING. SEE STD. DETAIL 307 (DETAIL 4) OR STD. DETAIL 308 (DETAIL 6) FOR DRAIN CONSTRUCTION.
9. t=6" (150 mm) WHEN DEPTH OF CATCH BASIN "D" IS 8 FEET (2.5 m) OR LESS. t=8" (205 mm) WHEN CATCH BASIN DEPTH "D" IS GREATER THAN 8 FEET (2.5 m) (SEE STD. DETAIL 307 AND 309).
10. THE GUTTER DEPRESSION SHALL BE OUTSIDE THE TYP. 12' (3.7 m) LANE WIDTH.
11. FOR GRATE AND FRAME DETAILS AND GRATE OPENING AREAS SEE STD. DETAIL 311.

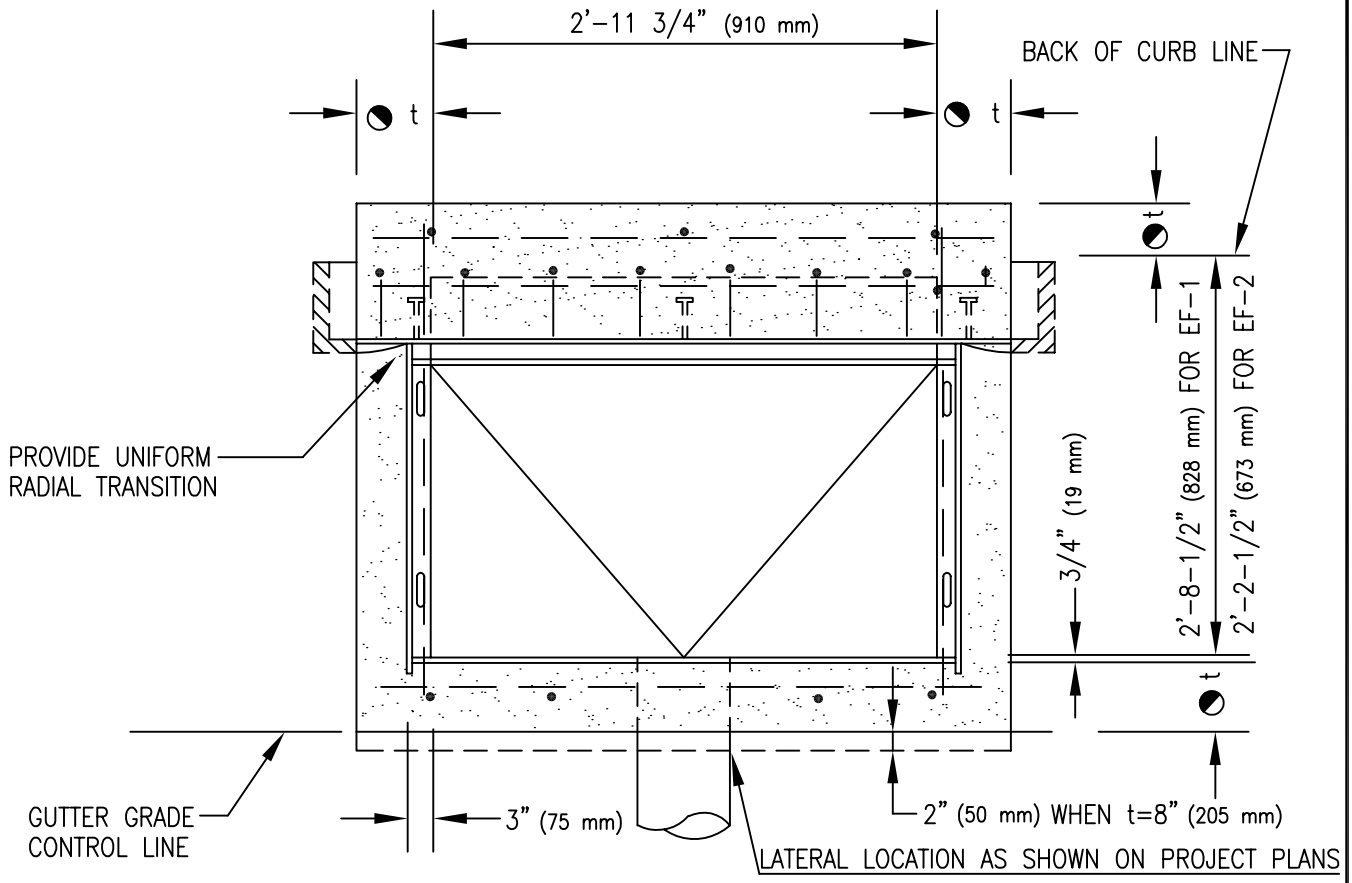

SEE GENERAL NOTE NO. 9
STD. DETAIL 306 FOR
t DIMENSION

PLAN: CATCH BASIN TYPE 1 (SINGLE)

ISSUED:		STANDARD DETAIL		DETAIL NO.
10/88		CATCH BASIN TYPE 1		307
REVISED:				
7/02				SHEET 1 OF 3

30701B.DWG 08/03/00 11:31

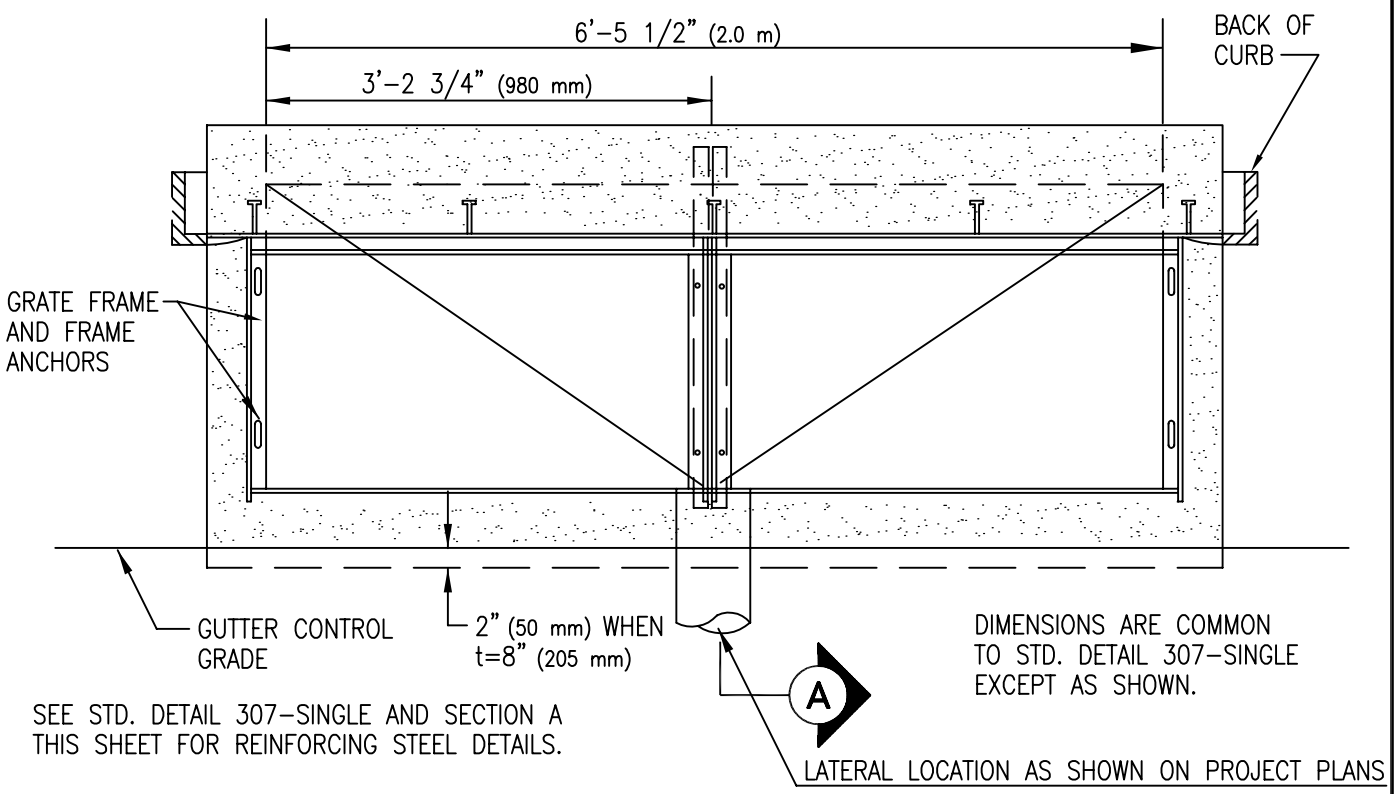

PLAN: CATCH BASIN TYPE 1 (DOUBLE)

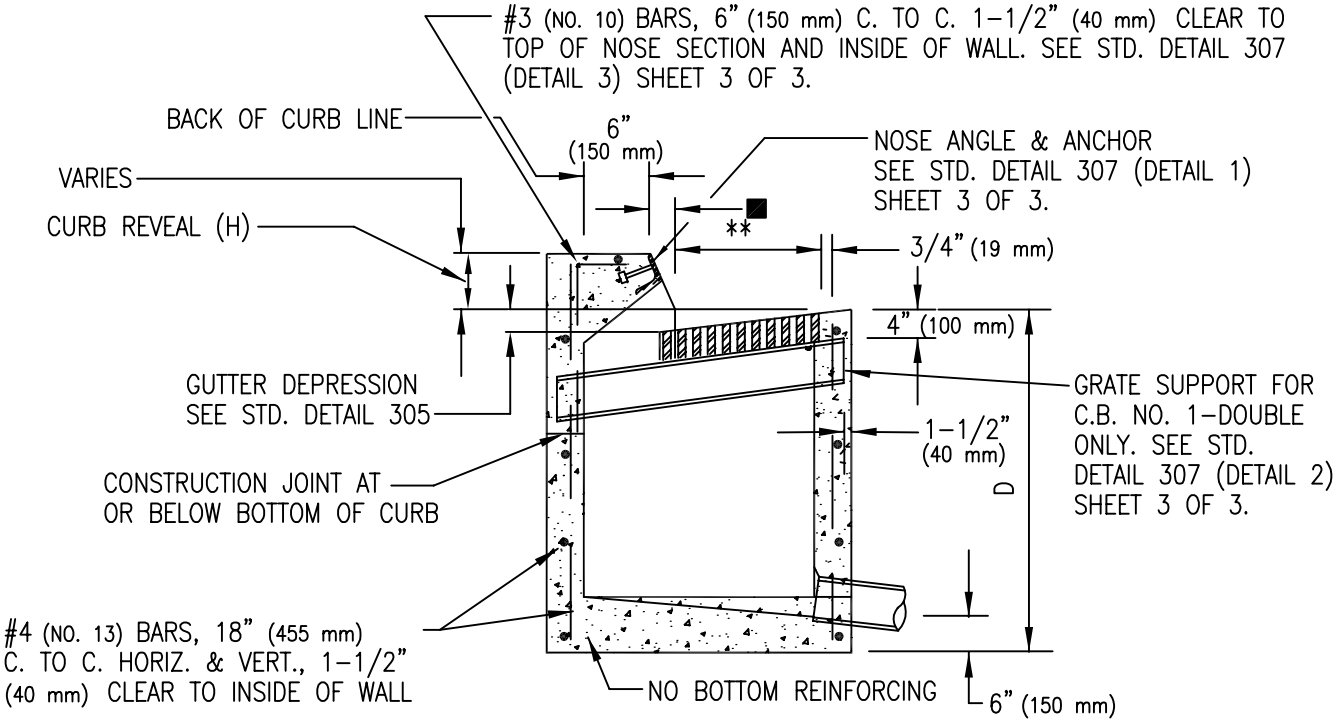

A SECTION

** 2'-0" (610 mm) FOR EF-1 GRATES
1'-6" (455 mm) FOR EF-1 GRATES
AND COMBINED CURB AND GUTTER

■ = 2-1/2" (65 mm) FOR TYPE 1 AND 1(G) CURB; VARIES WITH CURB REVEAL FOR TYPE 2 CURB (STD. DET. 209)

ISSUED:		STANDARD DETAIL		DETAIL NO.
10/88	CITY OF TUCSON FOUNDED 1776	CATCH BASIN TYPE 1	THE SEAL of PIMA COUNTY ARIZONA	307
REVISED: 7/02				SHEET 2 OF 3

30702B.DWG 08/03/00 11:39

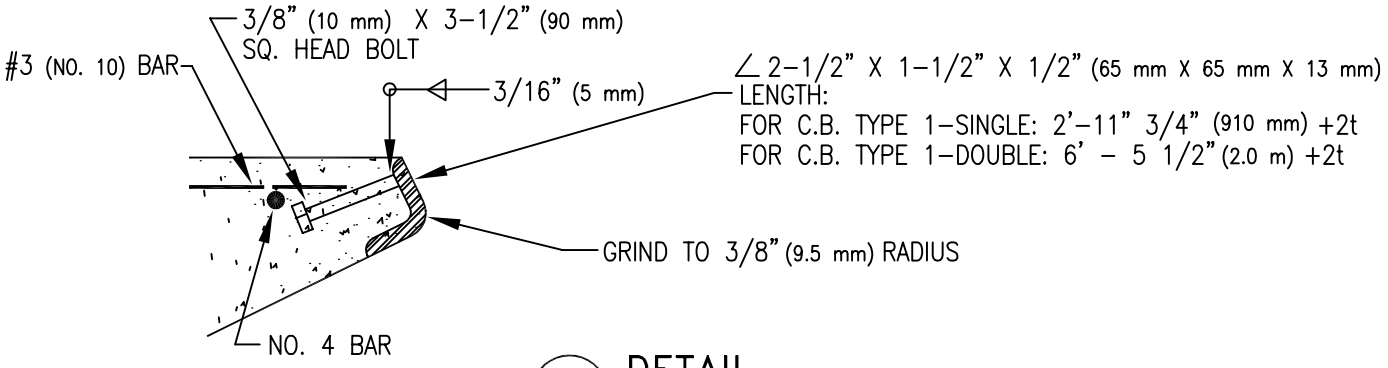

1 DETAIL

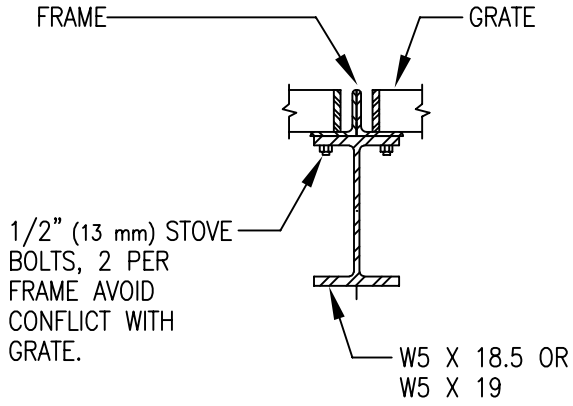

2 DETAIL

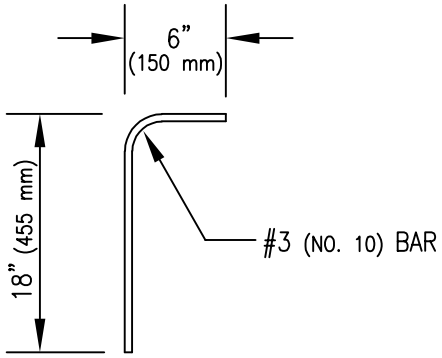

3 DETAIL

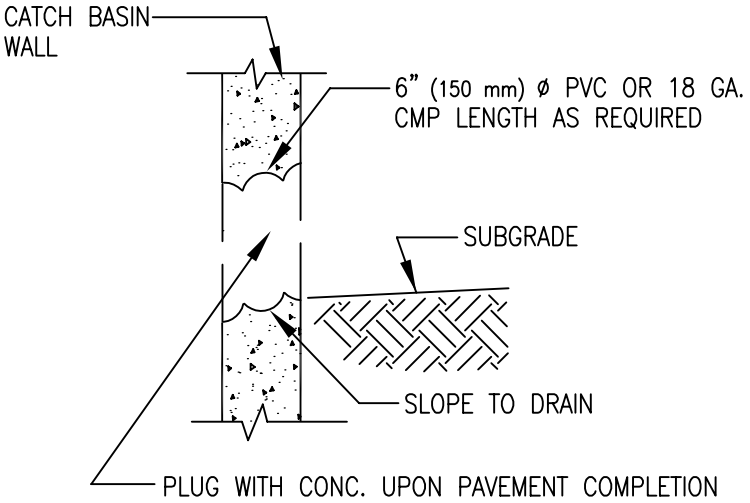

4 DETAIL

DRAIN MAY BE DELETED AT OPTION OF ENGINEER

ISSUED:		STANDARD DETAIL		DETAIL NO.
10/88		CATCH BASIN TYPE 1 DETAILS		307
REVISED:				
7/02				SHEET 3 OF 3

30703B.DWG 08/03/00 11:43

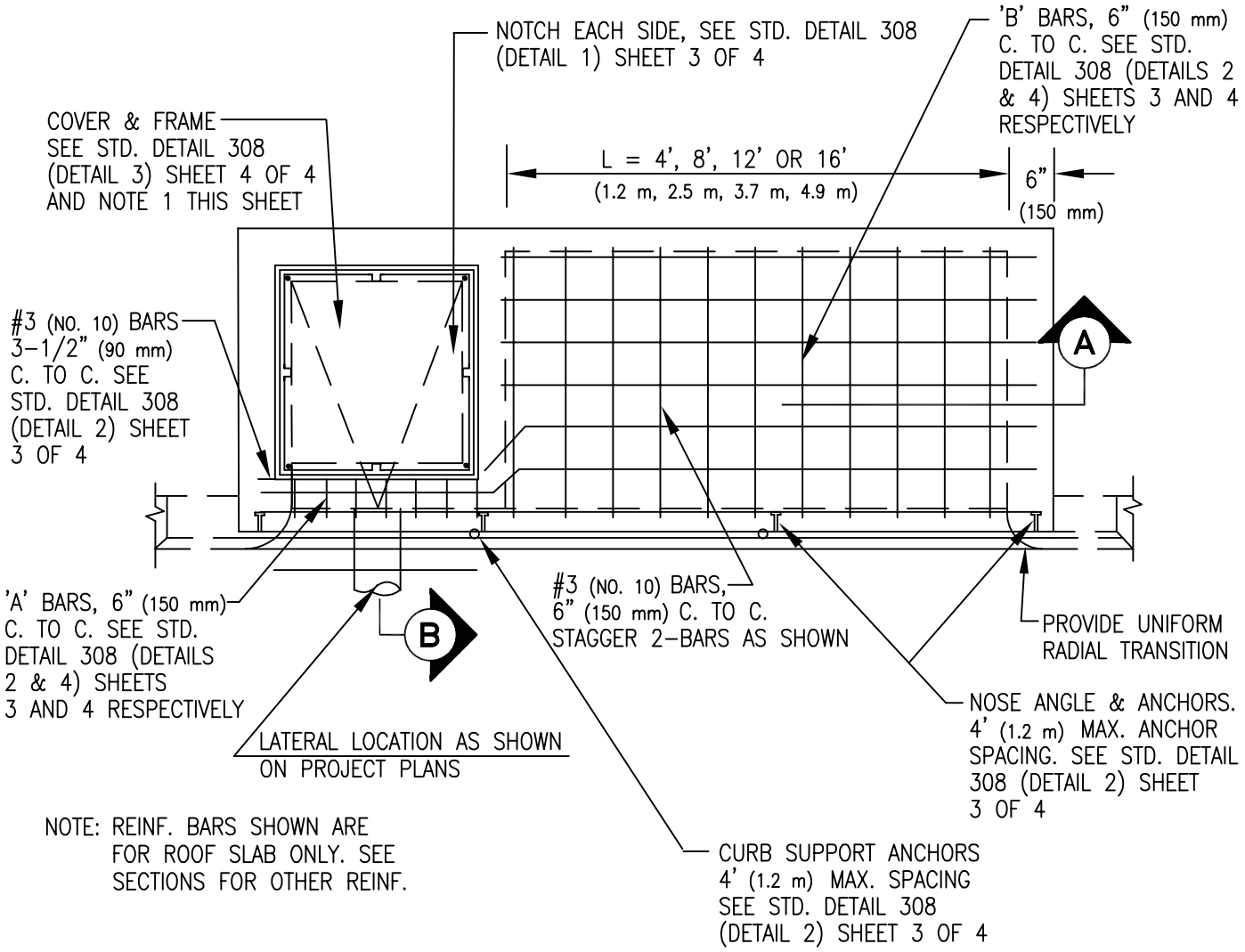

NOTE: REINF. BARS SHOWN ARE FOR ROOF SLAB ONLY. SEE SECTIONS FOR OTHER REINF.

PLAN

NOTES:

1. AS AN OPTION TO FRAME AND COVER SHOWN, A FRAME AND COVER PER STD. DETAIL 304 MAY BE USED IF APPROVED BY ENGINEER.

ISSUED:		STANDARD DETAIL		DETAIL NO.
10/88	CITY OF TUCSON FOUNDED 1776	CATCH BASIN TYPE 3	THE SEAL of PIMA COUNTY ARIZONA	308
REVISED: 7/02				SHEET 1 OF 4

30801B.DWG 08/03/00 16:03

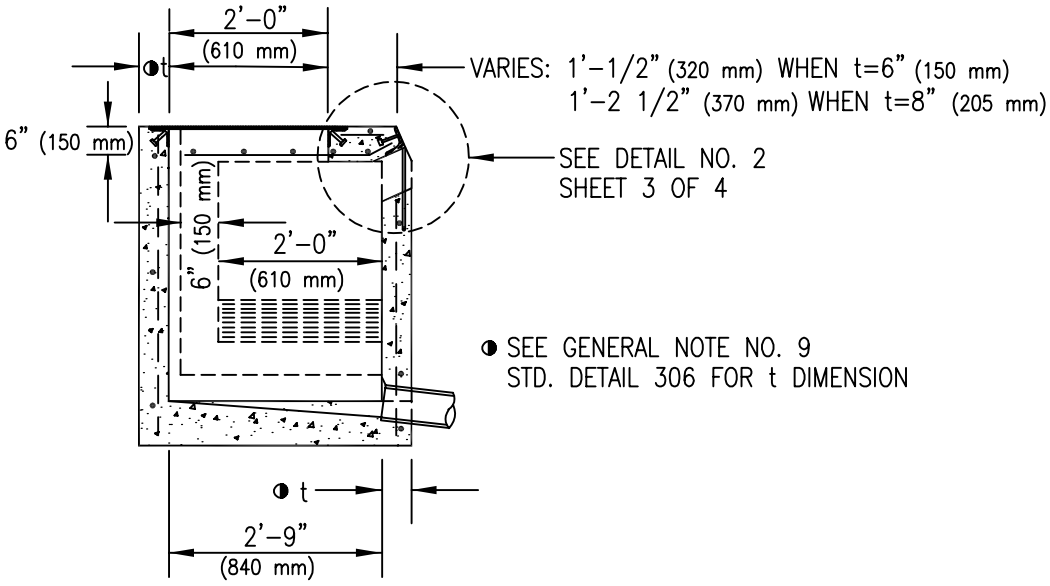

B SECTION

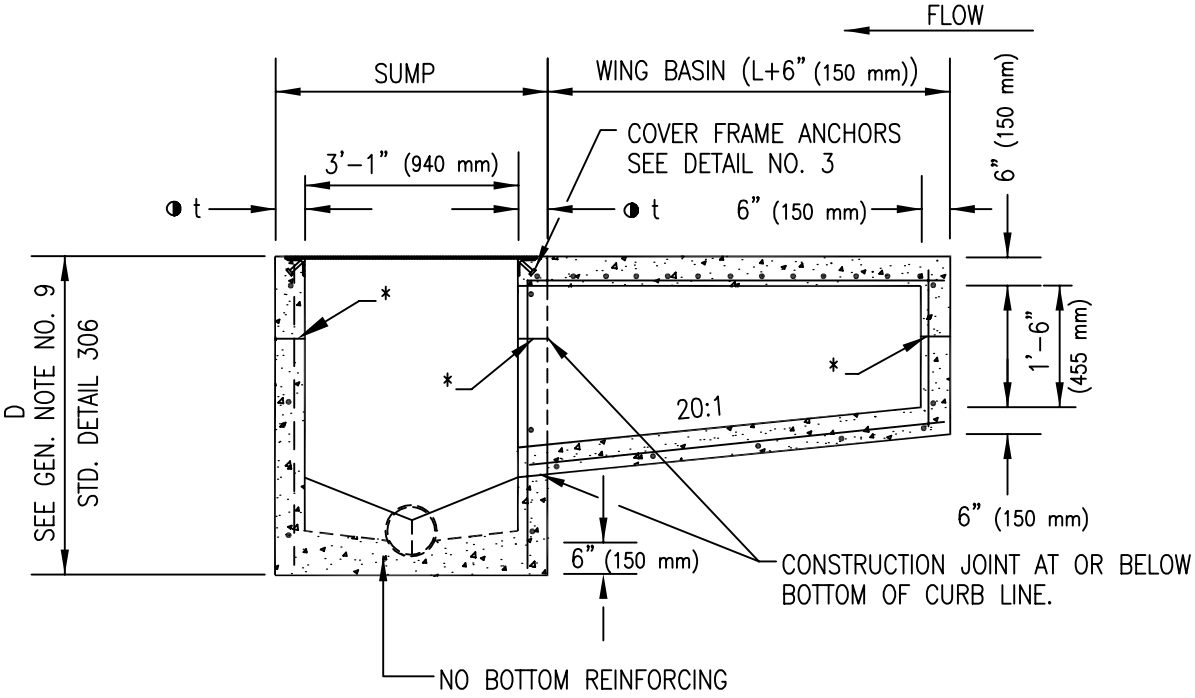

◑ SEE GENERAL NOTE NO. 9 STD. DETAIL 306 FOR t DIMENSION

* SEE GENERAL NOTE NO. 8 STD. DETAIL 306

A SECTION

ISSUED:		STANDARD DETAIL		DETAIL NO.
10/88		CATCH BASIN TYPE 3		308
REVISED:				
7/02				SHEET 2 OF 4

30B02B.DWG 08/03/00 11:51

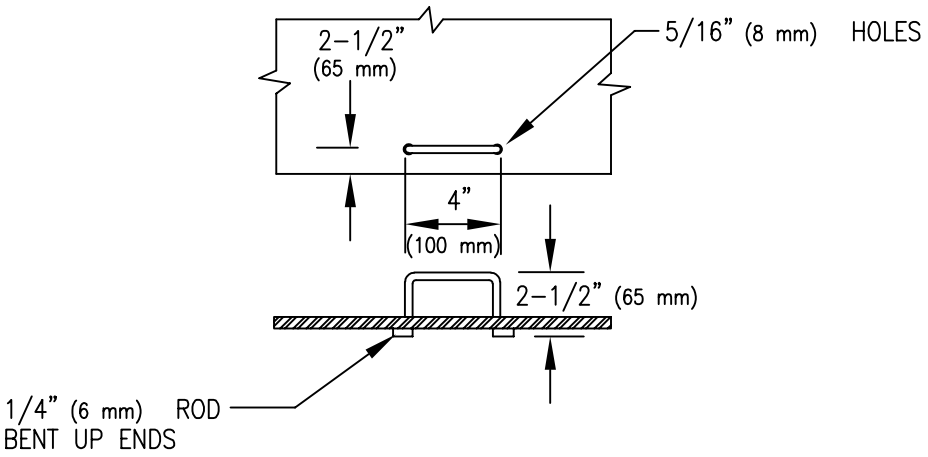

1 NOTCH (TYP. ALL SIDES)

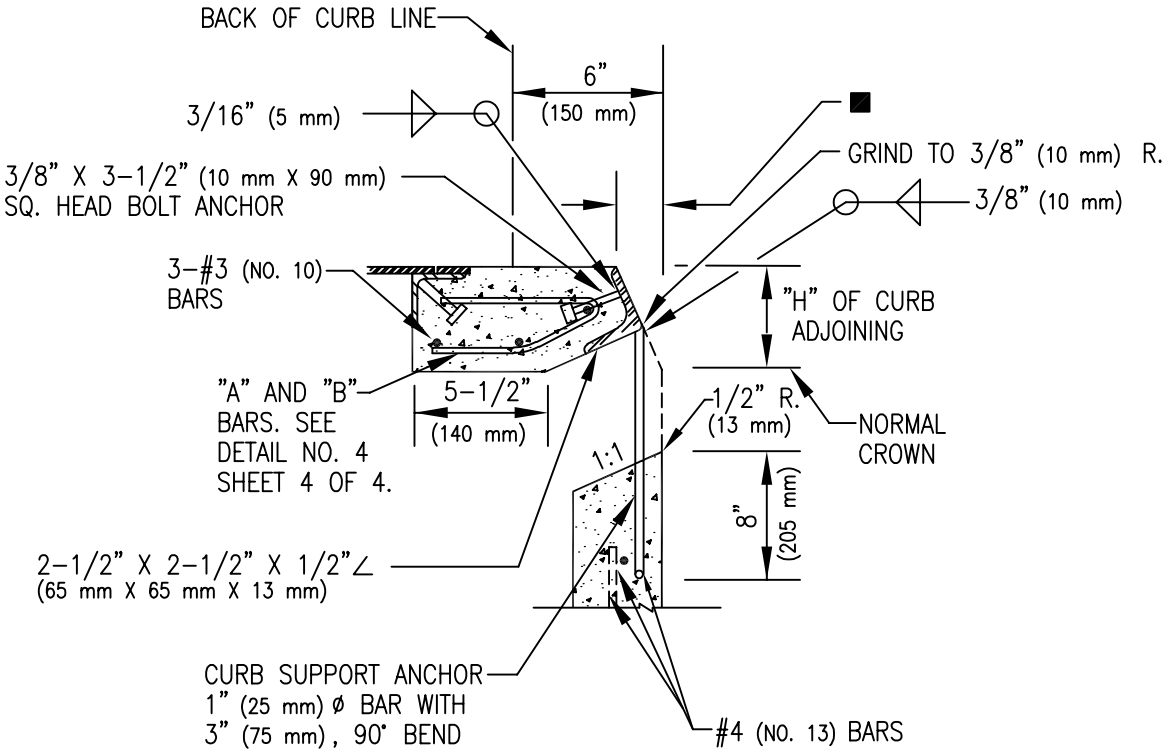

2 DETAIL

■ = 2-1/2" (65 mm) FOR TYPE 1 AND 1(G) CURB; VARIES WITH CURB REVEAL FOR TYPE 2 CURB (STD. DET. 209)

ISSUED:		STANDARD DETAIL		DETAIL NO.
10/88		CATCH BASIN DETAILS TYPE 3		308
REVISED:				
7/02				SHEET 3 OF 4

308038.DWG 08/03/00 11:55

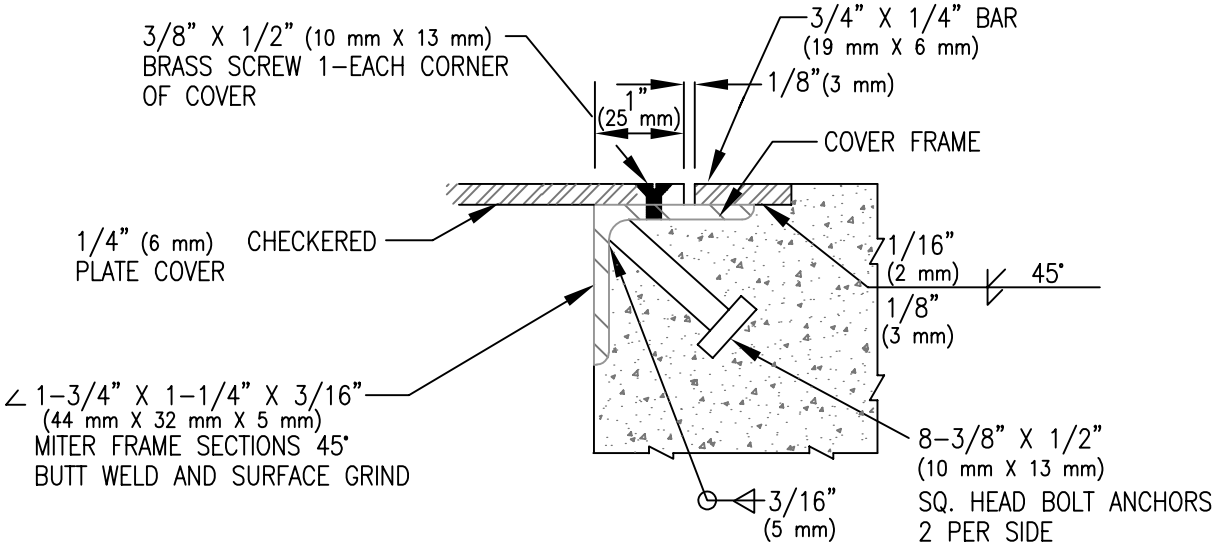

3 DETAIL

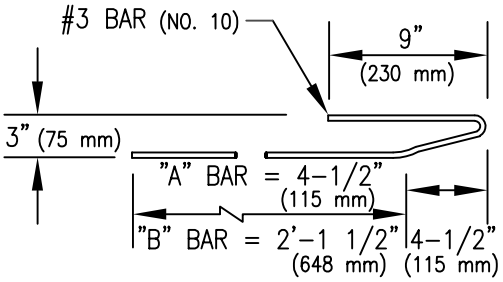

4 DETAIL

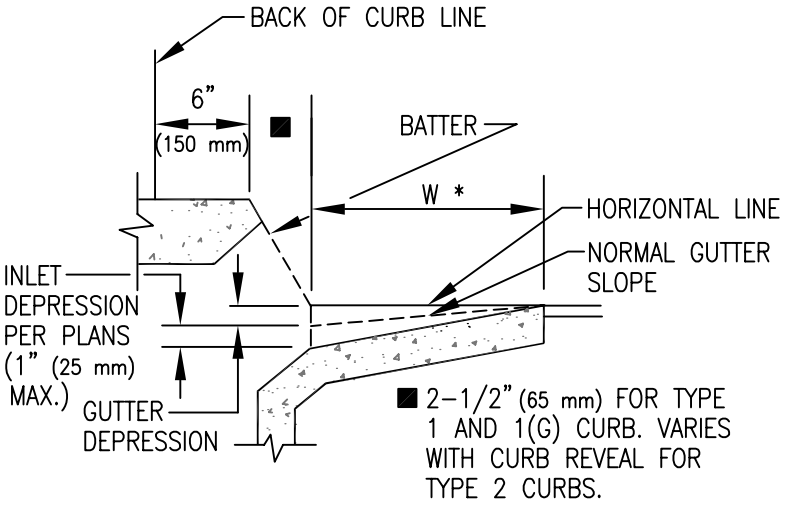

5 DETAIL

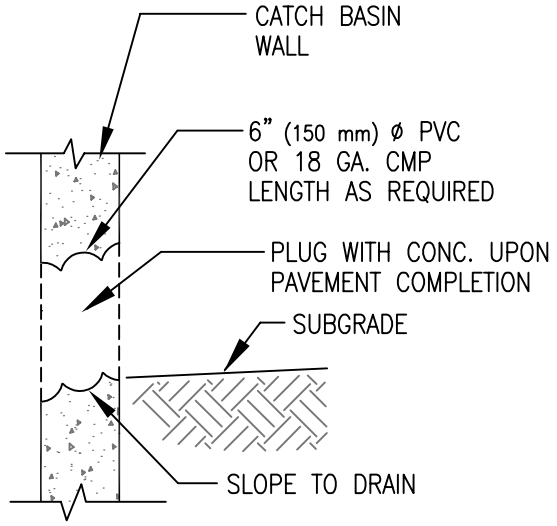

DRAIN MAY BE DELETED
AT OPTION OF ENGINEER

6 DETAIL

* W = NORMAL GUTTER WIDTH PER STD. DET. 209
OR 16" (405 mm) IF NO CONCRETE GUTTER

ISSUED:		STANDARD DETAIL		DETAIL NO.
10/88	CITY OF TUCSON FOUNDED 1776	CATCH BASIN DETAILS TYPE 3	THE SEAL of PIMA COUNTY ARIZONA	308
REVISED: 7/02				SHEET 4 OF 4

308D4B.DWG 08/03/00 11:58

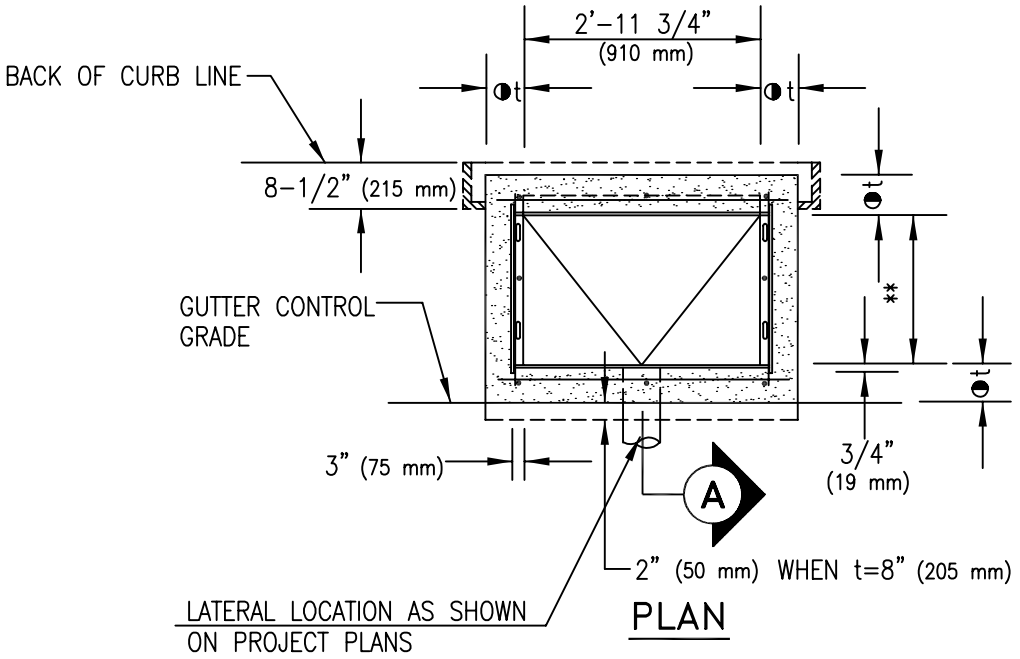

PLAN

** 2'-0" (610 mm) FOR EF-1 GRATES
1'-6" (455 mm) FOR EF-2 GRATES
USE 1'-6" (455 mm) WITH COMBINED CURB AND GUTTER
◑t SEE GEN. NOTE NO. 9, STD. DETAIL 306

ISSUED:		STANDARD DETAIL		DETAIL NO.
10/88	CITY OF FOUNDED 1776 TUCSON	CATCH BASIN TYPE 4	THE SEAL of PIMA COUNTY ARIZONA	309
REVISED:				
7/02				SHEET 1 OF 3

30901B.DWG 08/03/00 12:00

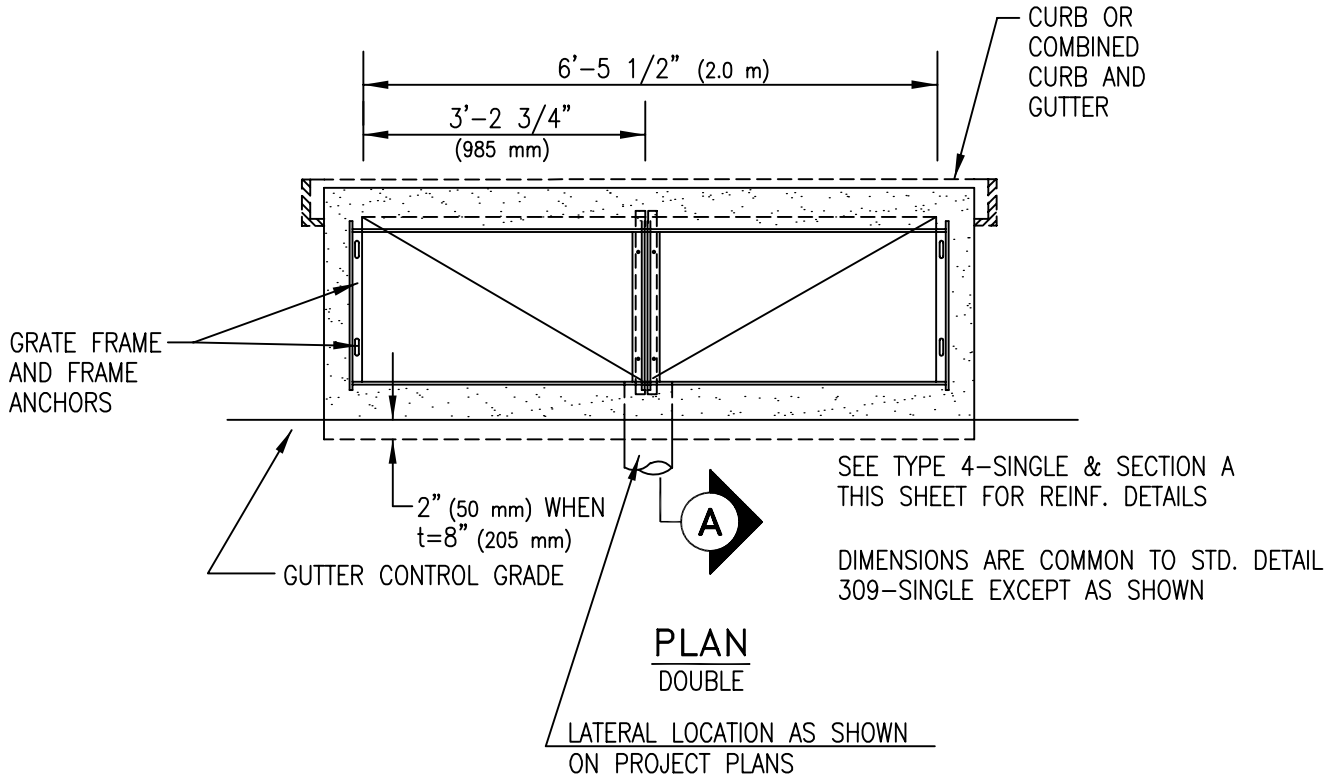

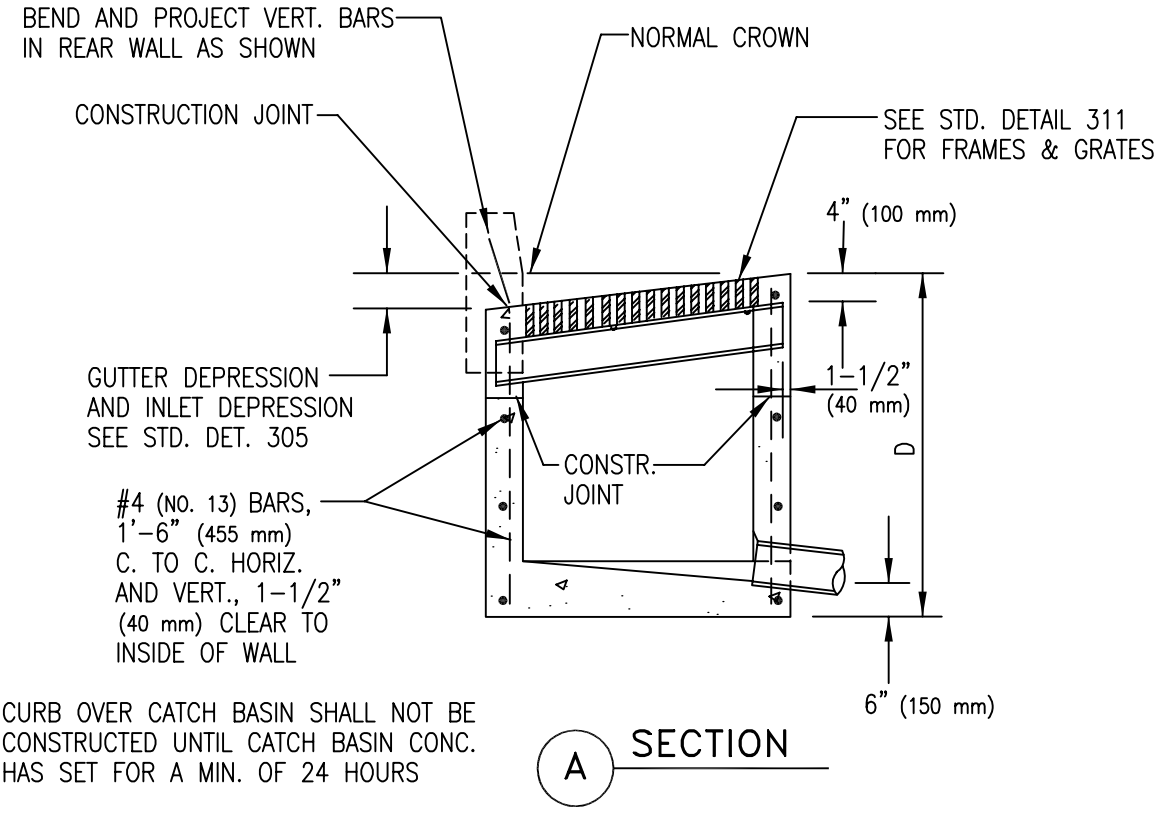

NOTE: CURB OVER CATCH BASIN SHALL NOT BE CONSTRUCTED UNTIL CATCH BASIN CONC. HAS SET FOR A MIN. OF 24 HOURS

ISSUED:		STANDARD DETAIL		DETAIL NO.
10/88		CATCH BASIN TYPE 4		309
REVISED: 7/02				SHEET 2 OF 3

309028.DWG 08/03/00 12:10

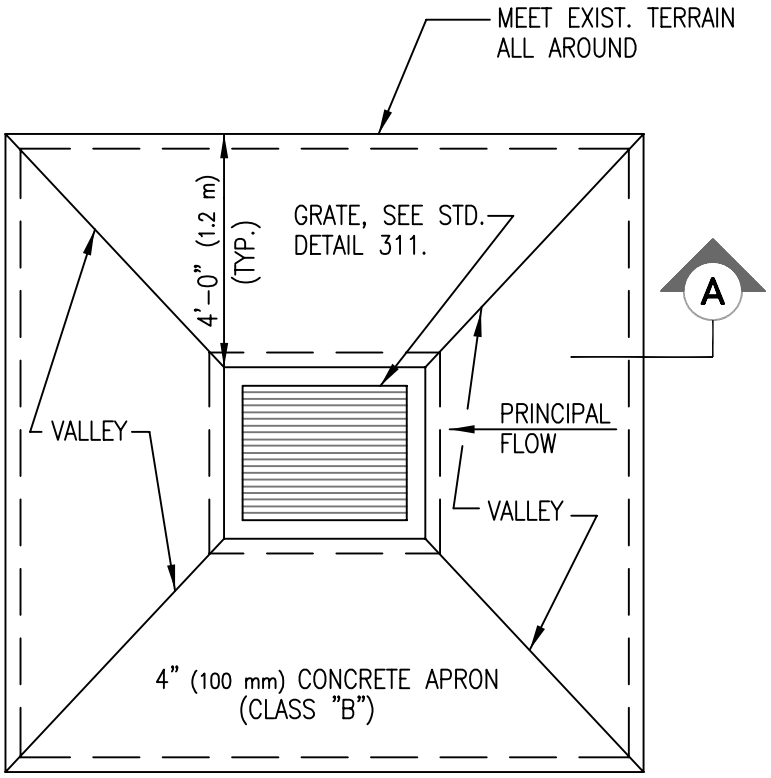

APRON SHALL BE SHAPED TO SUIT LOCAL CONDITIONS AND SHALL EXTEND A MINIMUM OF 4'-0" (1.2 m) FROM EDGE OF GRATE IN ALL DIRECTIONS. GRATE SHALL BE LEVEL AND DEPRESSED A MINIMUM OF 4" (100 mm) BELOW SURROUNDING TERRAIN. BEARING BARS SHALL PARALLEL TO THE DIRECTION OF PRINCIPAL FLOW.

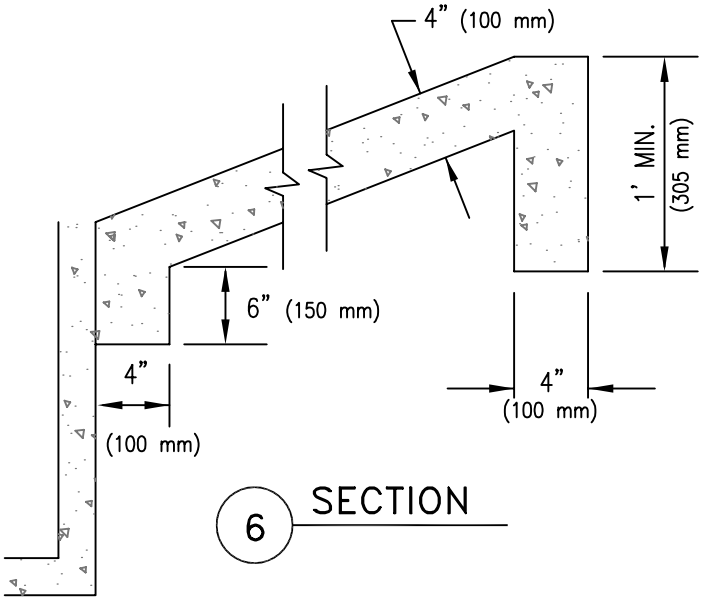

CATCH BASIN TYPE 4
(OFF ROADWAY LOCATION ONLY)

ISSUED:	CITY OF FOUNDED 1776 TUCSON	STANDARD DETAIL	THE SEAL of PIMA COUNTY ARIZONA	DETAIL NO.
10/88		CATCH BASIN TYPE 4		309
REVISED:				
7/02				SHEET 3 OF 3

30903B.DWG 08/03/00 12:12

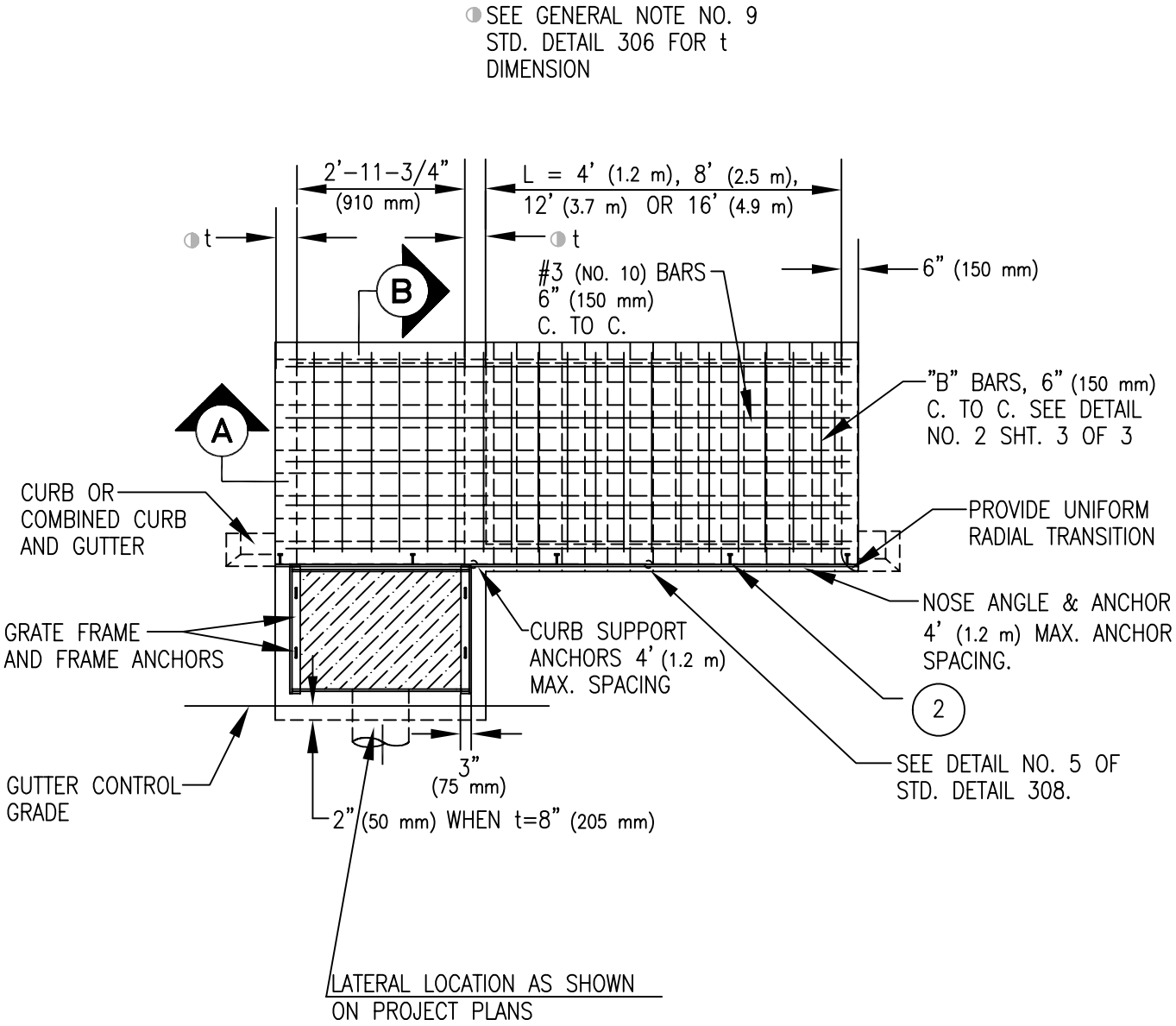

PLAN

31001.DWG 08/03/00 16:05

ISSUED:		STANDARD DETAIL		DETAIL NO.
10/88	CITY OF FOUNDED 1775 TUCSON	CATCH BASIN TYPE 5	THE SEAL of PIMA COUNTY ARIZONA	310
REVISED: 7/02				SHEET 1 OF 3

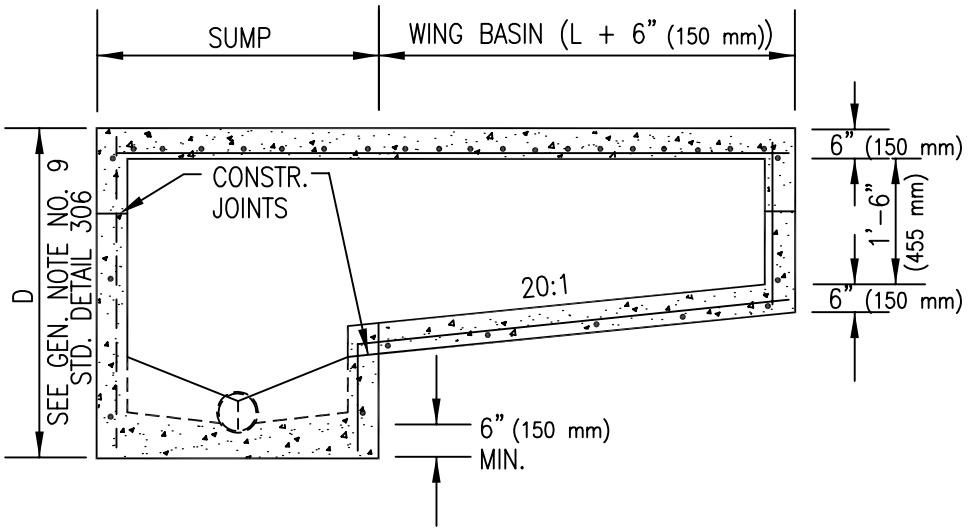

A SECTION

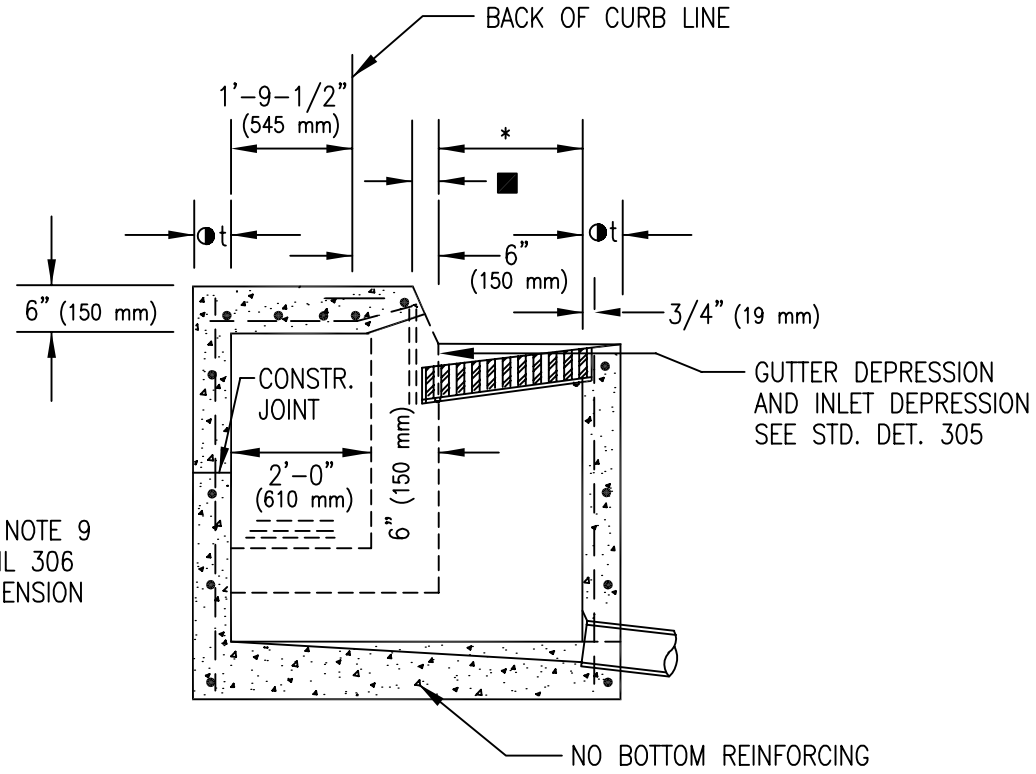

* 2'-0" (610 mm) FOR EF-1 GRATES
1'-6" (455 mm) FOR EF-2 GRATES
AND COMBINED CURB AND GUTTER

B SECTION

◪ = 2-1/2" (65 mm) FOR TYPE 1 AND 1(G) CURB; VARIES WITH CURB REVEAL FOR TYPE 2 CURB (STD. DET. 209)

ISSUED:		STANDARD DETAIL		DETAIL NO.
10/88		CATCH BASIN TYPE 5		310
REVISED:				
7/02				SHEET 2 OF 3

31002.DWG 08/03/00 13:19

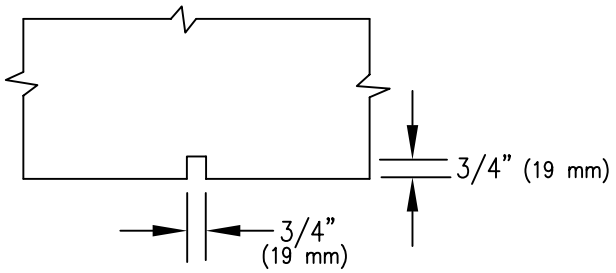

1 NOTCH (TYP. ALL SIDES)

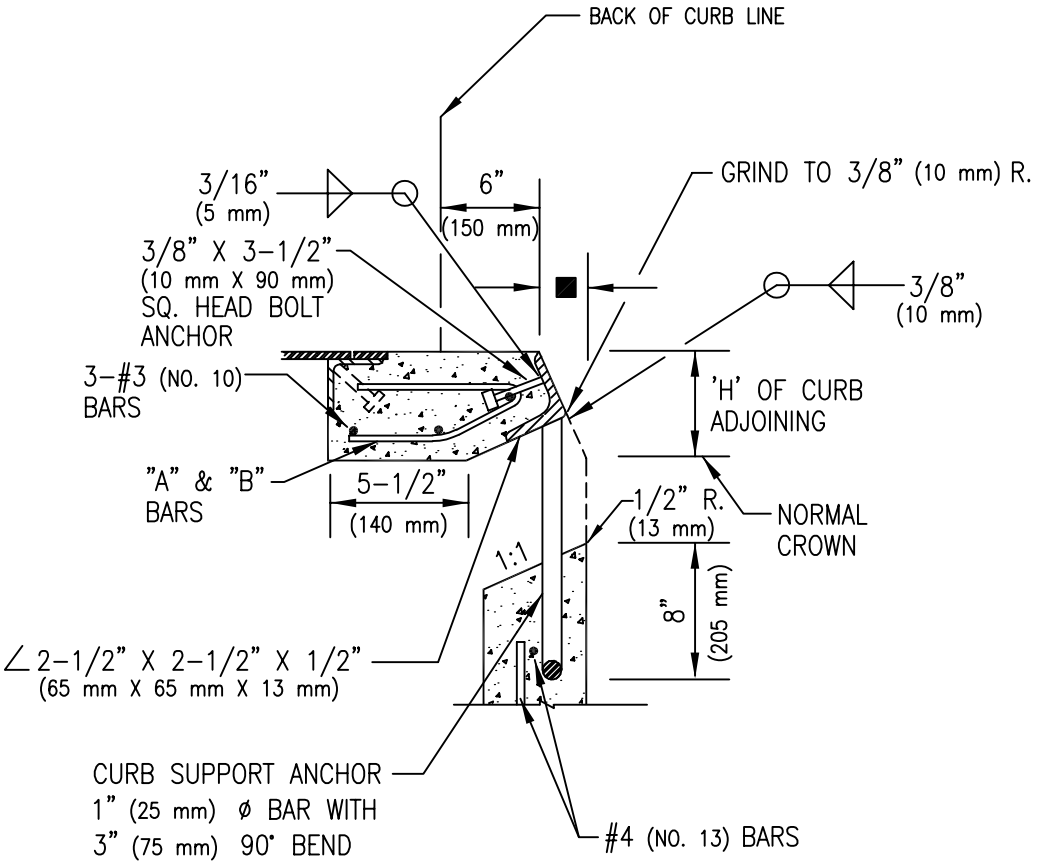

2 DETAIL

■ 2-1/2" (65 mm) FOR TYPE 1 AND 1(G) CURB. VARIES WITH CURB REVEAL FOR TYPE 2 CURB.

31003.DWG 08/03/00 13:23

ISSUED:		STANDARD DETAIL		DETAIL NO.
10/88		CATCH BASIN TYPE 5		310
REVISED:				
7/02				SHEET 3 OF 3

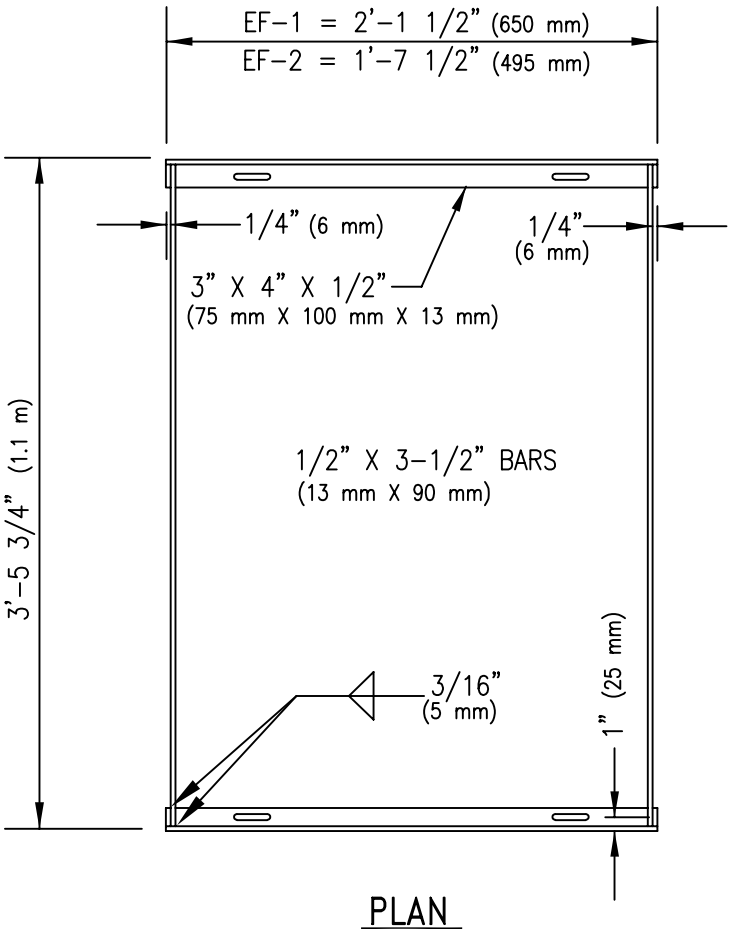

PLAN

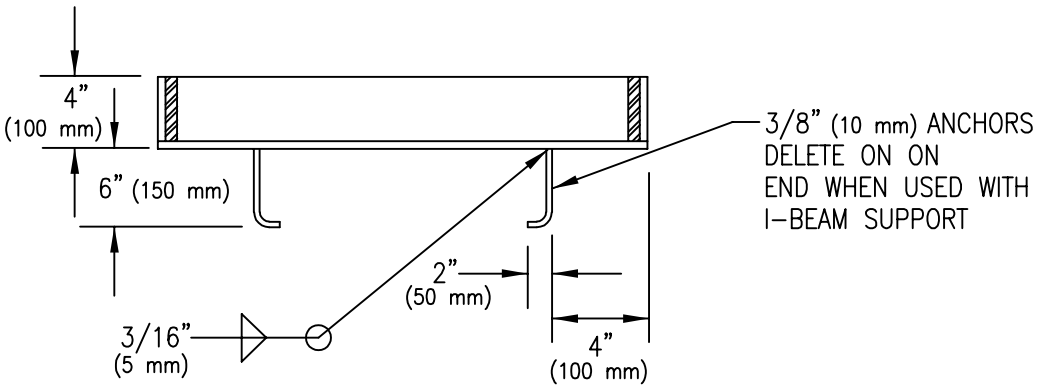

SECTION

GRATE TYPE	CLEAR BAR SPACING	NO. BARS	X	GRATE OPENING SQ. FT.
EF-1	1-5/8" (40 mm)	13	5/16" (8 mm)	4.66 (0.43 m^2)
EF-2	1-5/8" (40 mm)	10	1/8" (3 mm)	3.48 (0.32 m^2)

31101.DWG 08/03/00 13:27

ISSUED:	STANDARD DETAIL	DETAIL NO.
10/88	CATCH BASIN GRATES LONGITUDINAL BARS	311
REVISED: 7/02		SHEET 1 OF 2

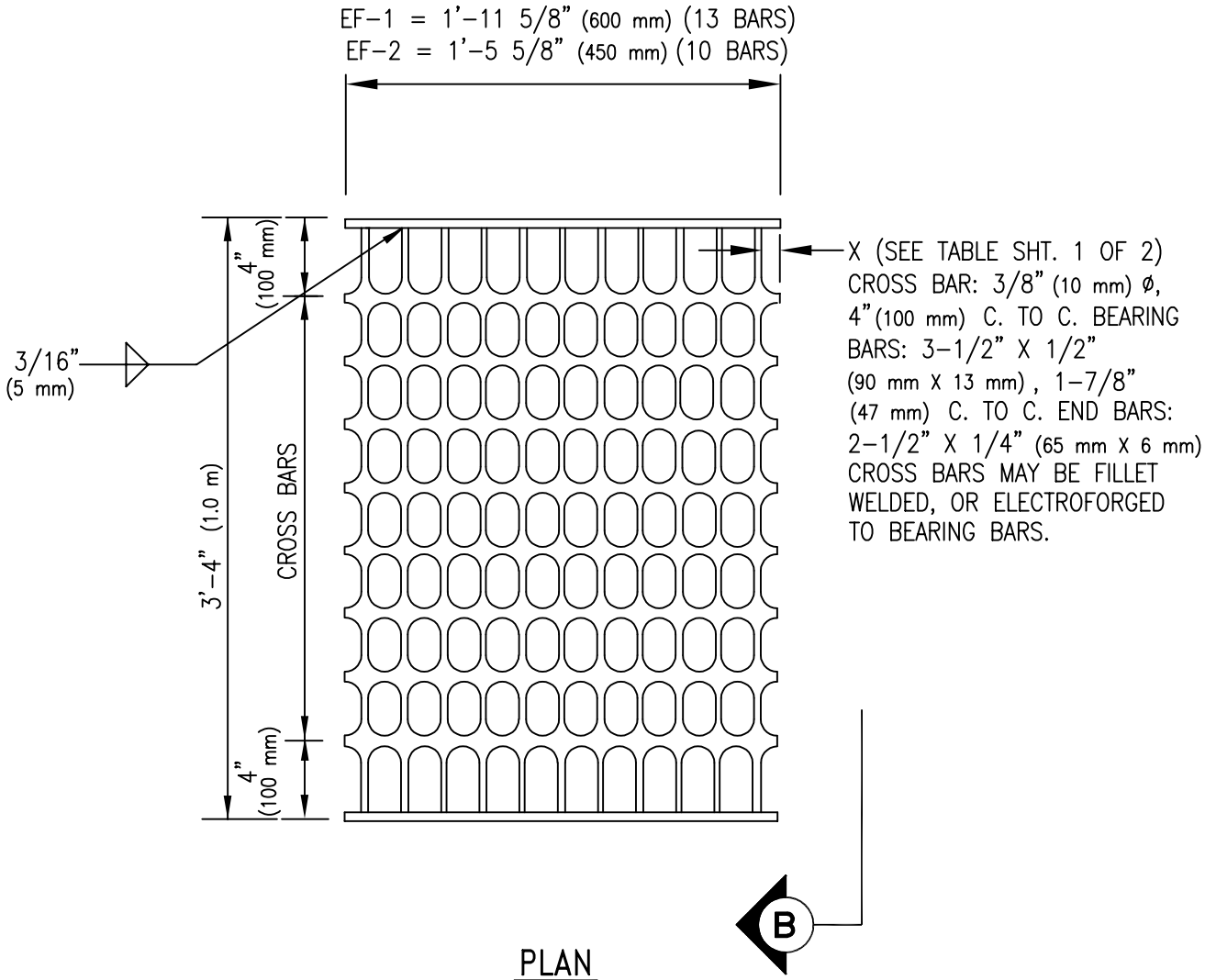

PLAN

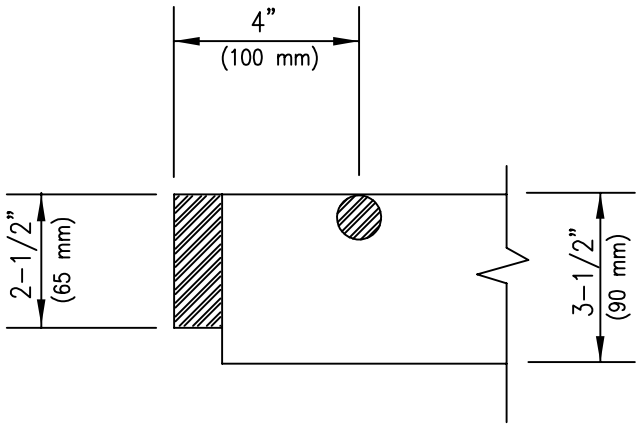

SECTION

NOTE:

NOT TO BE USED AS TRANSVERSE GRATE ACCROSS ROADWAY.

31102.DWG 08/03/00 13:31

ISSUED:		STANDARD DETAIL		DETAIL NO.
10/88	CITY OF TUCSON FOUNDED 1775	CATCH BASIN GRATES LONGITUDINAL BARS	THE SEAL of PIMA COUNTY ARIZONA	311
REVISED: 7/02				SHEET 2 OF 2

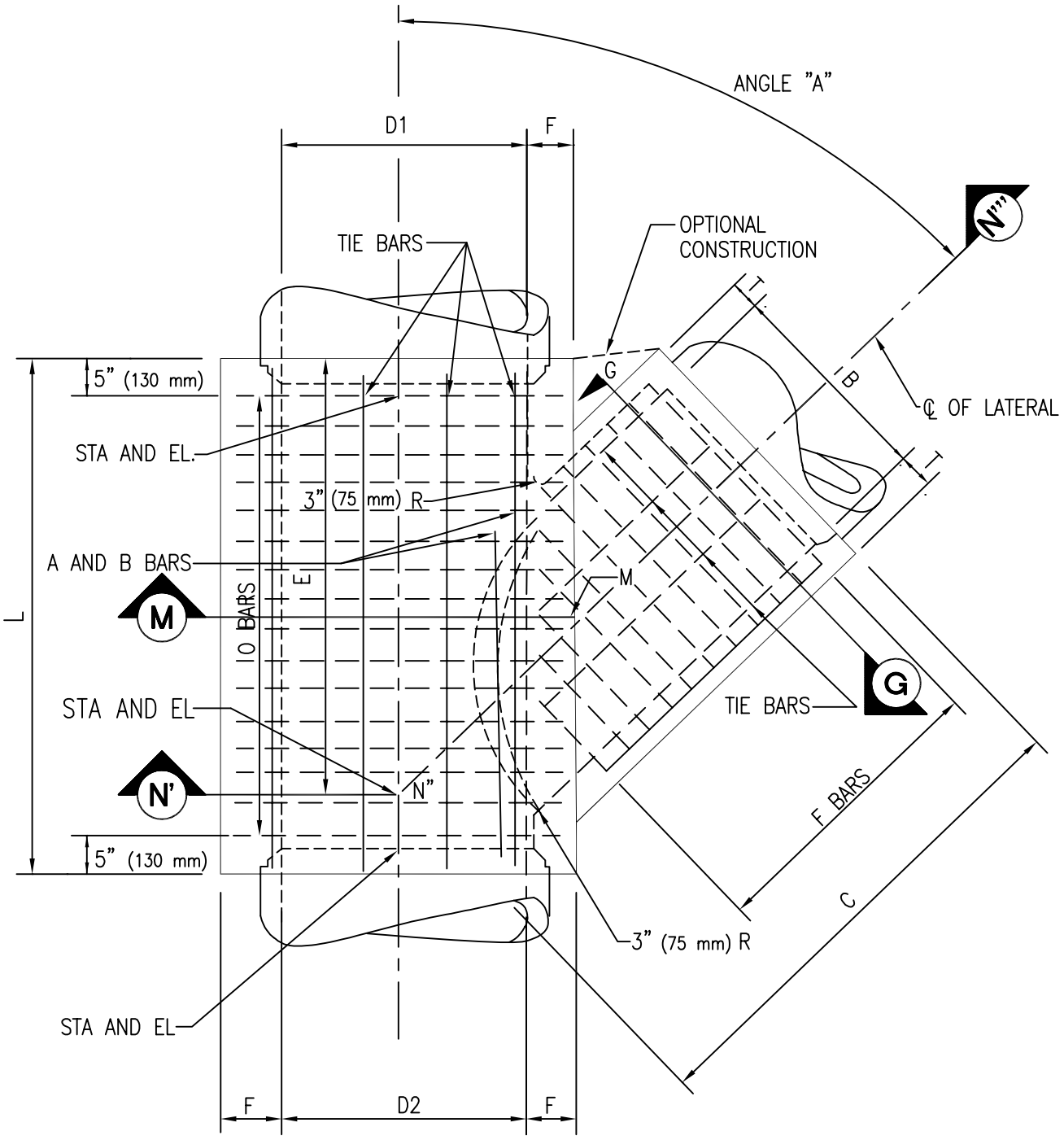

PLAN

ISSUED:		STANDARD DETAIL		DETAIL NO.
10/88	CITY OF TUCSON FOUNDED 1775	STORM DRAIN TRANSITION STRUCTURE	THE SEAL of PIMA COUNTY ARIZONA	312
REVISED:				
7/02				SHEET 1 OF 4

31201.DWG 08/03/00 13:32

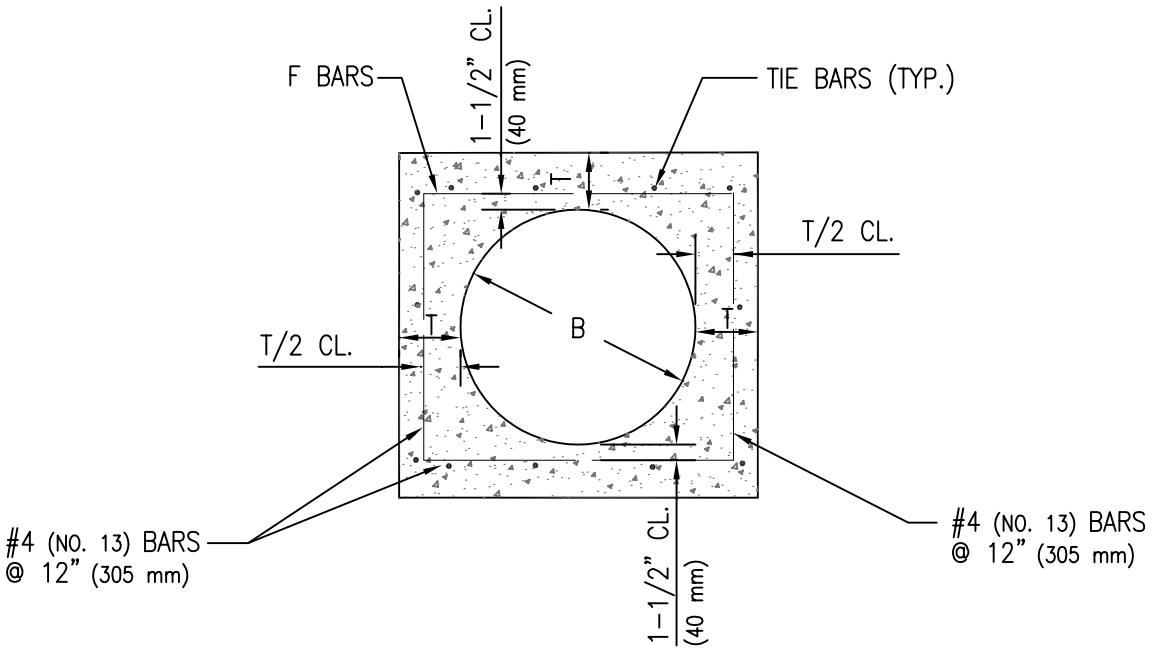

G SECTION

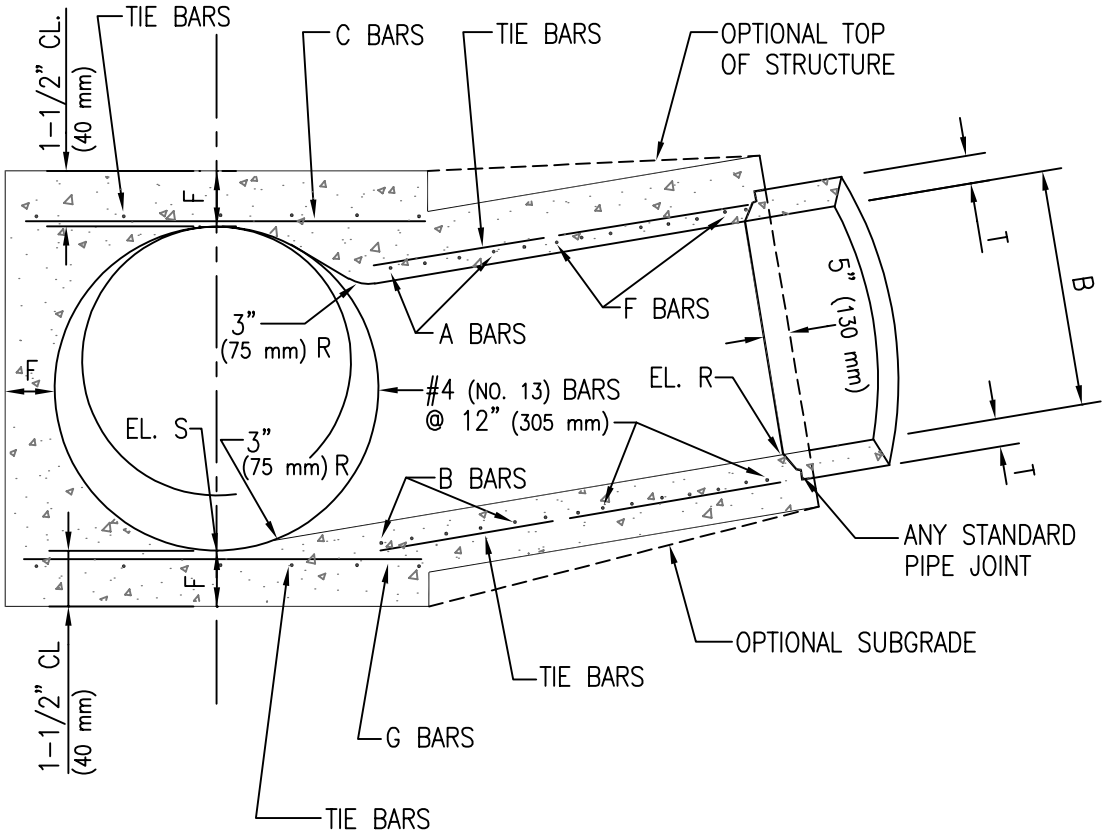

SECTION N' N'' N'''

PROJECTED ON M–M–N''

ISSUED:		STANDARD DETAIL		DETAIL NO.
10/88	CITY OF TUCSON	STORM DRAIN TRANSITION STRUCTURE	THE SEAL OF PIMA COUNTY ARIZONA	312
REVISED:				
7/02				SHEET 2 OF 4

31202.DWG 08/03/00 13:41

STRUCTURAL DATA

DIM. B OR D_2	DIM. F OR T	A & B BARS COVER		C BARS COVER		F BARS COVER	G BARS
INCHES	INCHES	3' TO 10' (915 mm TO 3.05 m)	1' TO 3' (305 mm TO 915 mm) 10' TO 20' (3.05 m TO 6.1 m)	1' TO 15' (305 mm TO 4.6 m)	15' TO 20' (4.6 m TO 6.1 m)	1' TO 20' (305 mm TO 6.1 m)	
18 (460 mm)	4-1/2 (115 mm)	#3 @ 6" (NO. 10 @ 150 mm)	#3 @ 4-1/2" (NO. 10 @ 115 mm)	#4 (NO. 13) @ 6" (150 mm)	#4 (NO. 13) @ 6" (150 mm)	#4 (NO. 13) @ 6" (150 mm)	
21 (535 mm)	5 (130 mm)	#3 @ 6" (NO. 10 @ 150 mm)	#3 @ 4-1/2" (NO. 10 @ 115 mm)				
24 (610 mm)	5-1/4 (135 mm)	#4 @ 6" (NO. 13 @ 150 mm)	#5 @ 5-1/2" (NO. 16 @ 140 mm)				
27 (685 mm)	5-1/2 (140 mm)						
30 (760 mm)	6 (150 mm)						
33 (840 mm)	6-1/4 (155 mm)						
36 (915 mm)	6-1/2 (165 mm)						
39 (990 mm)	7 (180 mm)	#4 @ 6" (NO. 13 @ 150 mm)	#5 @ 5-1/2" (NO. 16 @ 140 mm)	#4 (NO. 13) @ 6" (150 mm)	#4 (NO. 13) @ 6" (150 mm)		
42 (1.07 m)	7-1/2 (190 mm)	#5 @ 5-1/2" (NO. 16 @ 140 mm)	#6 @ 4" (NO. 19 @ 100 mm)	#5 (NO. 16) @ 6" (150 mm)	#5 (NO. 16) @ 6" (150 mm)	#4 (NO. 13) @ 6" (150 mm)	
45 (1.14 m)	7-3/4 (200 mm)					#5 (NO. 16) @ 6" (150 mm)	
48 (1.22 m)	8 (205 mm)						
51 (1.3 m)	8-1/2 (215 mm)						
54 (1.37 m)	9 (230 mm)						
57 (1.45 m)	9-1/4 (235 mm)						
60 (1.52 m)	9-1/2 (245 mm)	#5 @ 5-1/2" (NO. 16 @ 140 mm)	#6 @ 4" (NO. 19 @ 100 mm)				#4 (NO. 13) @ 18" (455 mm)
63 (1.60 m)	10 (255 mm)	#5 @ 4" (NO. 16 @ 100 mm)	#6 @ 3" (NO. 19 @ 75 mm)				
66 (1.68 m)	10-1/4 (260 mm)						
69 (1.75 m)	10-3/4 (275 mm)						
72 (1.83 m)	11 (280 mm)	#5 @ 4" (NO. 16 @ 100 mm)	#6 @ 3" (NO. 19 @ 75 mm)			#5 (NO. 16) @ 6" (150 mm)	
75 (1.91 m)	11-1/2 (290 mm)	SEE PROJECT PLANS				SEE PROJECT PLANS	
78 (1.98 m)	11-3/4 (300 mm)						
81 (2.06 m)	12 (305 mm)						
84 (2.14 m)	12-1/2 (320 mm)				#5 (NO. 16) @ 6" (150 mm)		
87 (2.21 m)	12-3/4 (325 mm)				#5 (NO. 16) @ 5" (130 mm)		
90 (2.29 m)	13-1/4 (335 mm)						
93 (2.36 m)	13-1/2 (345 mm)						
96 (2.44 m)	14 (355 mm)			#5 (NO. 16) @ 6" (150 mm)	#5 (NO. 16) @ 5" (130 mm)		#4 (NO. 13) @ 18" (455 mm)

NOTE: UNLESS NOTED ON THE PLANS, BARS SHALL BE IN ACCORDANCE WITH ASTM A 615, GRADE 40.

ISSUED:	STANDARD DETAIL	DETAIL NO.
10/88	STORM DRAIN TRANSITION STRUCTURE	312
REVISED: 7/02		SHEET 3 OF 4

CITY OF TUCSON FOUNDED 1775

THE SEAL of PIMA COUNTY ARIZONA

31203.DWG 08/03/00 16:11

1. CONCRETE SHALL BE CLASS "S", 3000 PSI (20.7 MPa)

2. DIMENSIONS:

   A. SEE PROJECT PLANS FOR VALUES OF A, B, C, D1, E, L, ELEVATION "R", ELEVATION "S", AND MAINLINE STATIONS AND ELEVATIONS.

   B. THE LENGTH OF DIMENSIONS "C", "E" AND "L" MAY BE VARIED AT THE OPTION OF THE CONTRACTOR TO MEET PIPE ENDS.

   C. ELEVATION "S" OCCURS AT THE INTERSECTION OF THE CENTERLINE OF THE MAIN LINE AND LATERAL ON THE PROLONGATION OF THE INVERT GRADE OF THE LATERAL.

3. REINFORCEMENT SHALL BE GRADE 40 AND SHALL CONFORM TO SECTION 1003 OF THE STD. SPECS., AND TO DETAILS AND SCHEDULES SHOWN IN THE REINFORCEMENT SCHEDULE SHOWN HEREON:

   A. "A", "B" AND "F" BARS REFER TO DIMENSION "B".

   B. "C" AND "G" BARS REFER TO DIMENSIONS "D2".

   C. "COVER" MEANS THE DIFFERENCE IN VERTICAL ELEVATION BETWEEN THE TOP OF THE STRUCTURE AND THE SURFACE GRADE ABOVE.

   D. TIE BARS SHALL BE #4 (NO. 13) AT 18 INCHES (455 mm).

   E. REINFORCEMENT SHALL BE PLACED 1-1/2 INCHES (40 mm) CLEAR FROM THE INSIDE FACE OF CONCRETE EXCEPT AS OTHERWISE SHOWN HEREON.

   F. WALL AND SLAB THICKNESS (T) SHALL BE AS SHOWN HEREON.

   G. FOR "B" GREATER THAN 72 INCHES (1.8 m) OR D2 GREATER THAN 96 INCHES (2.5 m), SEE PROJECT PLANS.

4. A STEEL TROWEL SURFACE SHALL BE PROVIDED FOR THE CONCRETE FLOOR OF THE STRUCTURE AND TO THE CONCRETE SIDES FROM INVERT TO SPRING LINE.

5. CONCRETE FOR THE STRUCTURE INCLUDING THE LATERAL(S) SHALL BE PLACED IN ONE CONTINUOUS OPERATION, EXCEPT THAT THE CONTRACTOR MAY, AT HIS OPTION, PLACE AT THE SPRING LINE A CONSTRUCTION JOINT WITH A LONGITUDINAL KEYWAY MEASURING NOT LESS THAN HALF THE WALL THICKNESS IN BOLT HEIGHT AND WIDTH.

6. STATIONING WHERE APPLICABLE TO THIS STRUCTURE APPLY ALONG THE CENTER LINES OF THE MAIN LINE AND THE LATERAL(S). THE STATION POINT IS AT THE INTERSECTION OF THE CENTER LINES OF THE MAIN LINE AND LATERAL(S). ELEVATION "S" IS ON THE PROLONGATION OF THE LATERAL(S) INVERT GRADE AT THE STATION POINT.

7. WHERE LATERALS ENTER ON BOTH SIDES OF THE STRUCTURE, THEY SHALL BE DESIGNATED ON THE PROJECT PLANS AS RIGHT OR LEFT, FACING IN DIRECTION OF STATIONING.

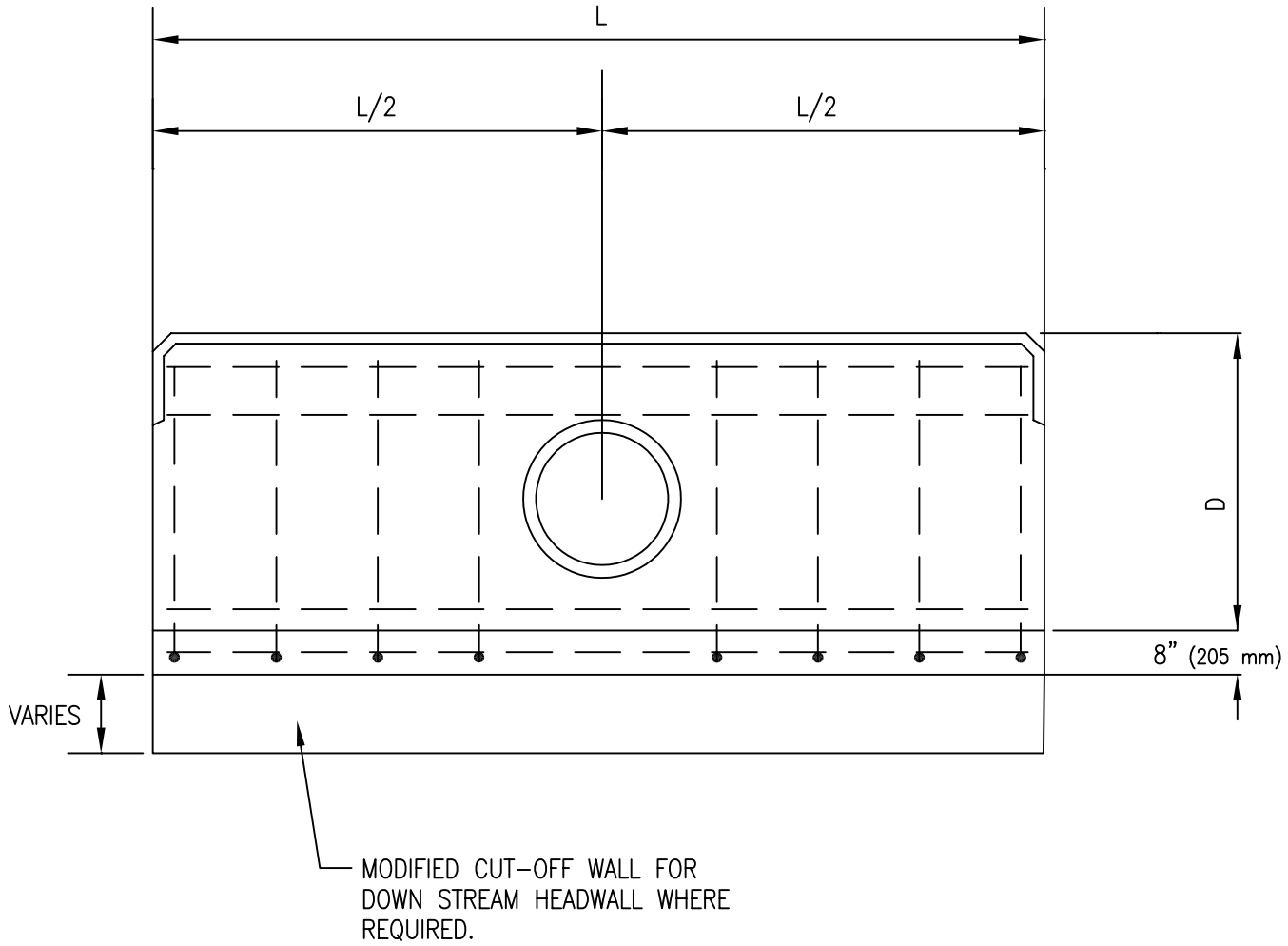

STRAIGHT HEADWALL SINGLE PIPE

NOTES:

1. HEADWALL SHALL CONFORM WITH ADOT STANDARD DRAWING B-11.11 EXCEPT AS MODIFIED ABOVE.
2. DEPTH OF CUT-OFF WALL SHALL BE NOTED ON PROJECT PLANS.
3. 'D' DIMENSION IS A MINIMUM. THE HEIGHT OF HEADWALL ABOVE THE PIPE MAY INCREASE TO ACCOMMODATE SITE CONDITIONS.
4. WHEN PIPE CENTERLINE INTERSECTS HEADWALL AT OTHER THAN A 90° ANGLE, THE LENGTH 'L' MAY VARY FROM TABLE IN STANDARD DRAWING B-11.11 TO ACCOUNT FOR OBLIQUE PIPE CROSS SECTION THROUGH WALL.

ISSUED:		STANDARD DETAIL		DETAIL NO.
10/88	CITY OF TUCSON FOUNDED 1775	HEADWALL	THE SEAL of PIMA COUNTY ARIZONA	313
REVISED: 7/02				SHEET 1 OF 2

31301.DWG 08/03/00 14:20

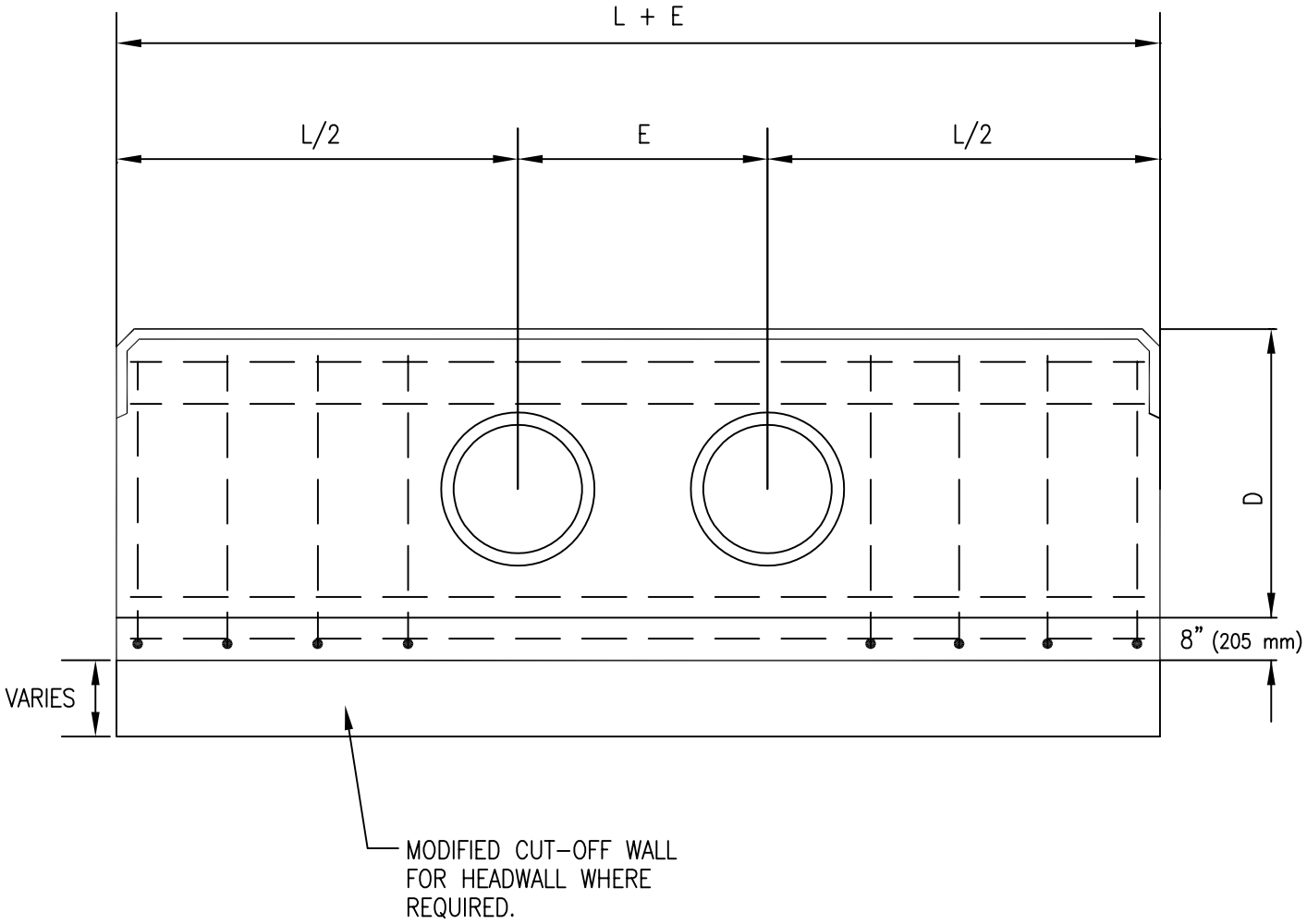

STRAIGHT HEADWALL DOUBLE PIPE

NOTES:

1. HEADWALL SHALL CONFORM WITH ADOT STANDARD DRAWING B-11.11 EXCEPT AS MODIFIED ABOVE.
2. DEPTH OF CUT-OFF WALL SHALL BE NOTED ON PROJECT PLANS.
3. 'D' DIMENSION IS A MINIMUM. THE HEIGHT OF HEADWALL ABOVE THE PIPE MAY INCREASE TO ACCOMMODATE SITE CONDITIONS.
4. WHEN PIPE CENTERLINE INTERSECTS HEADWALL AT OTHER THAN 90° ANGLE, THE LENGTH 'L+E' MAY VARY FROM TABLE IN STANDARD DRAWING B-11.11 TO ACCOUNT FOR OBLIQUE PIPE CROSS SECTION THROUGH WALL.

ISSUED:		STANDARD DETAIL		DETAIL NO.
10/88		HEADWALL		313
REVISED: 7/02				SHEET 2 OF 2

31302.DWG 08/03/00 14:21

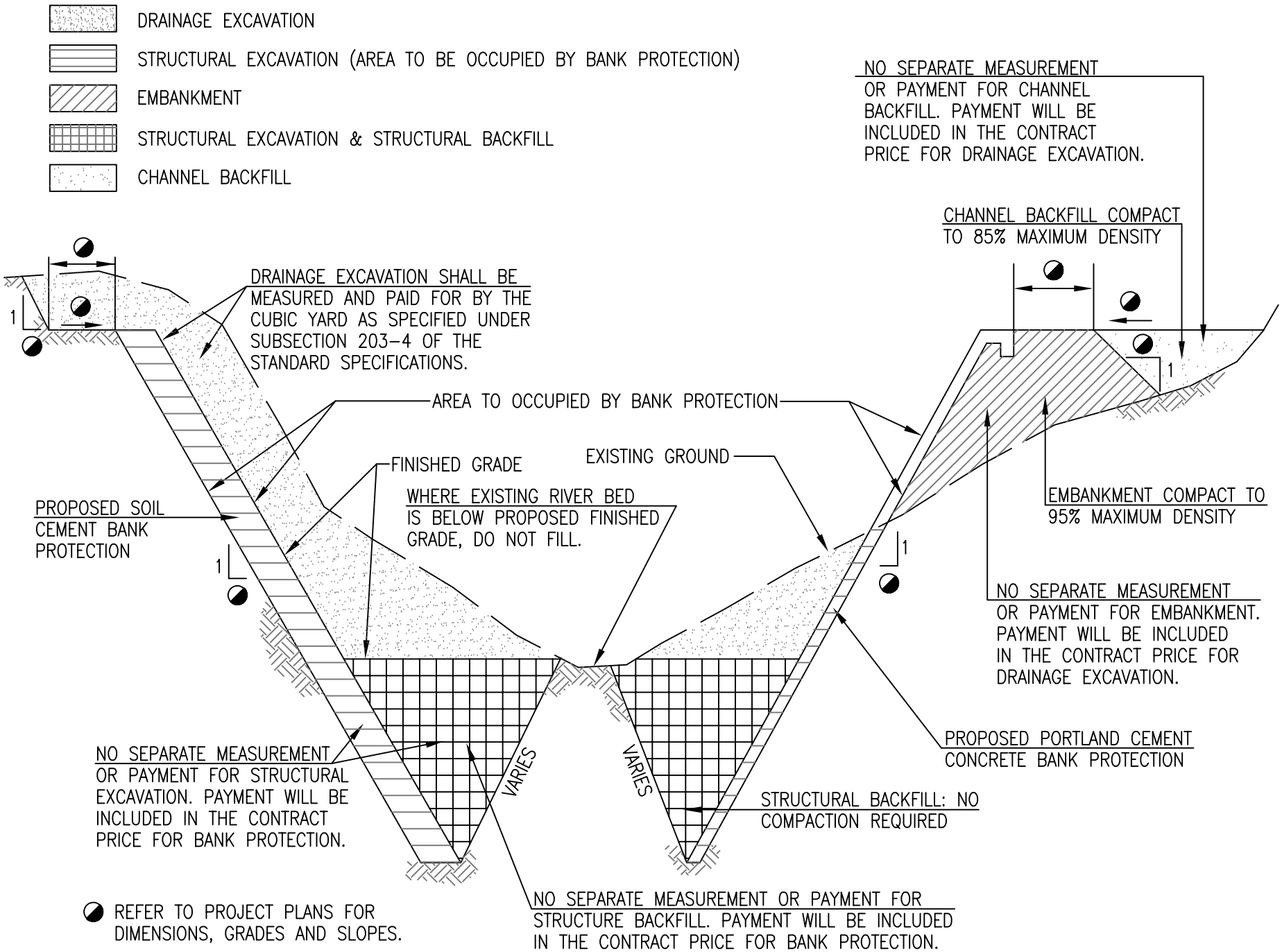

ISSUED: 1/94
REVISED: 7/02

CITY OF TUCSON

STANDARD DETAIL

BANK PROTECTION EARTHWORK PAY LIMITS

THE SEAL OF PIMA COUNTY ARIZONA

DETAIL NO. 314

SHEET 1 OF 1

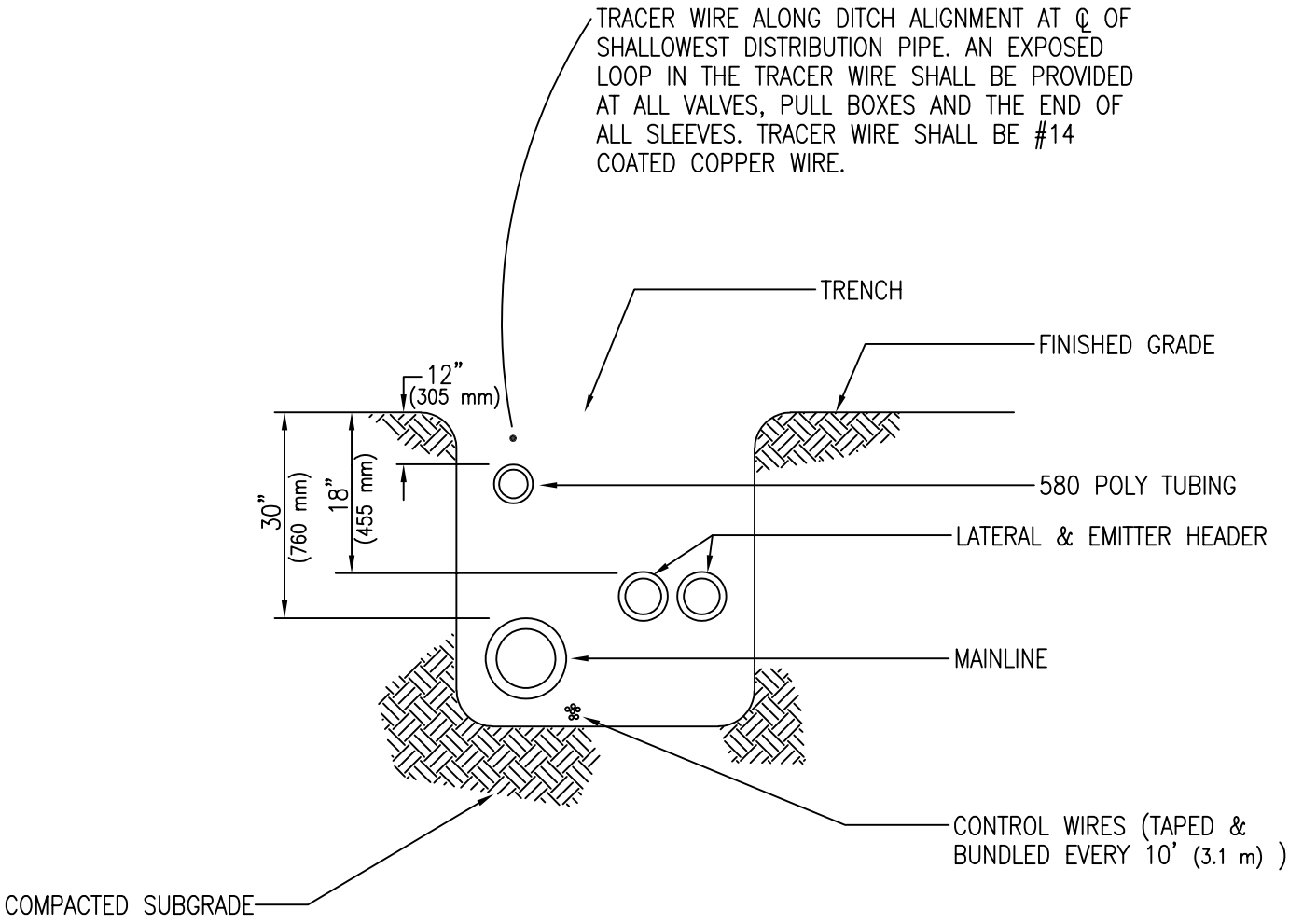

NOTE:

ALL MAINLINES TO BE INSTALLED IN ACCORDANCE WITH MANUFACTURERS SPECIFICATIONS

ISSUED:		STANDARD DETAIL		DETAIL NO.
1/94		IRRIGATION TRENCHING		400
REVISED:				
7/02				SHEET 1 OF 1

400.DVG 08/03/00 14:22

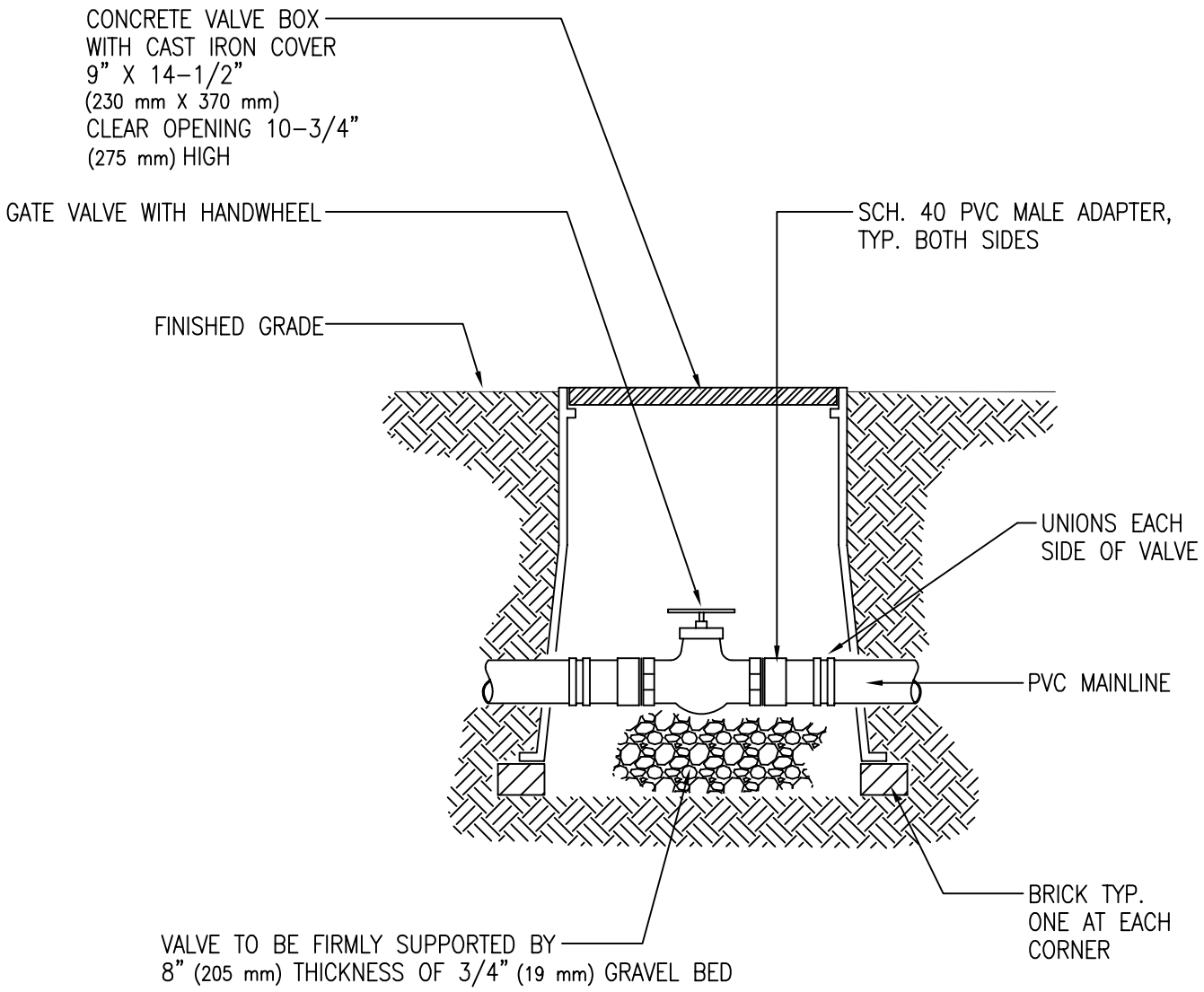

ISSUED:		STANDARD DETAIL		DETAIL NO.
1/94	CITY OF TUCSON FOUNDED 1776	GATE \ ISOLATION VALVE	THE SEAL of PIMA COUNTY ARIZONA	401
REVISED:				
7/02				SHEET 1 OF 1

401.DWG 08/03/00 14:23

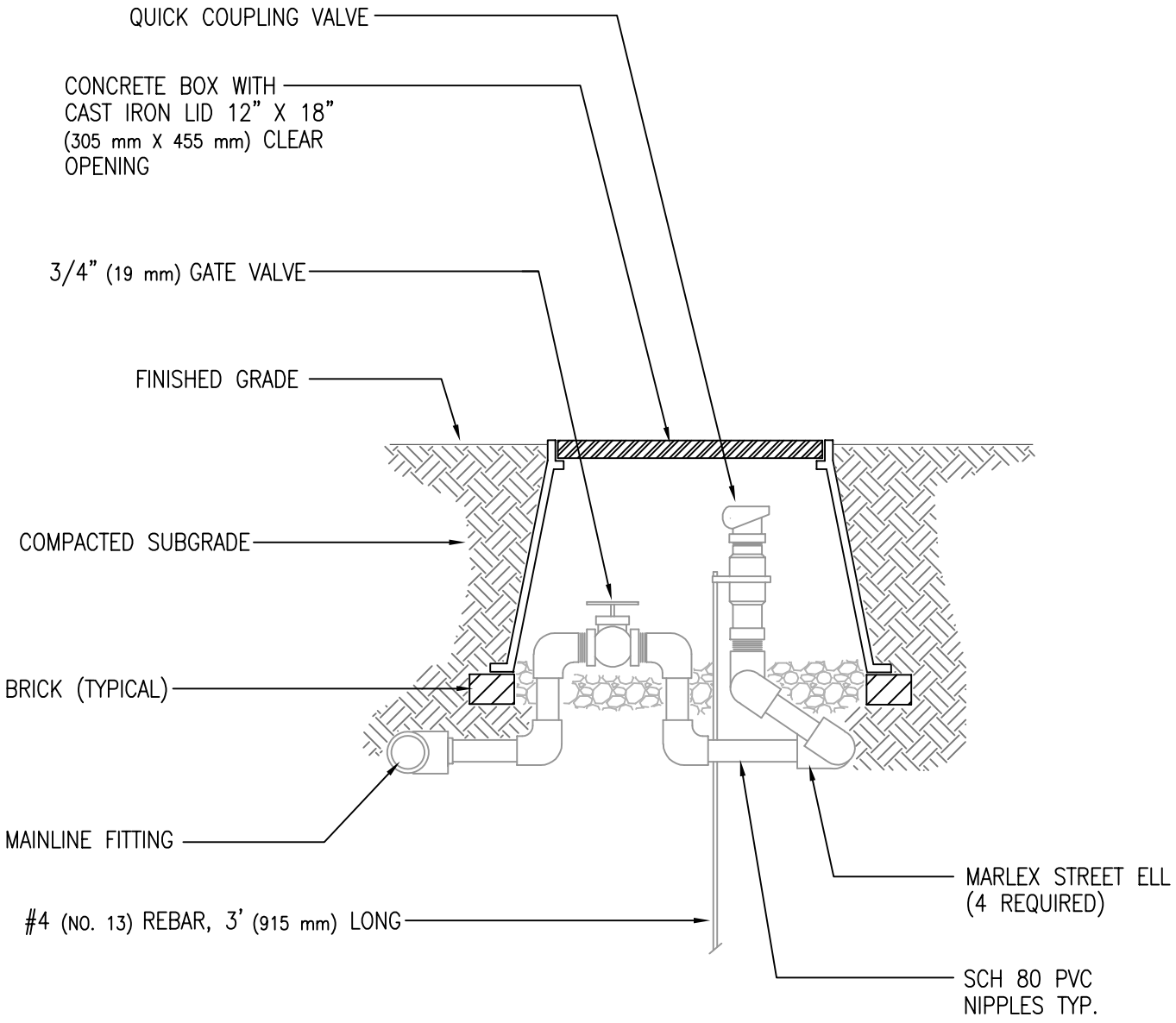

NOTE:

WHERE RECLAIMED WATER IS USED FOR IRRIGATION, A WARNING SIGN SHALL BE POSTED IN PROXIMITY TO ALL VALVE BOXES AND HOSE BIBS DENOTING THESE FEATURES AS BEING PART OF THE RECLAIMED SYSTEM.

ISSUED:		STANDARD DETAIL		DETAIL NO.
1/94	CITY OF TUCSON FOUNDED 1776	QUICK COUPLER	THE SEAL of PIMA COUNTY ARIZONA	402
REVISED: 7/02				SHEET 1 OF 1

402.DWG 08/03/00 14:25

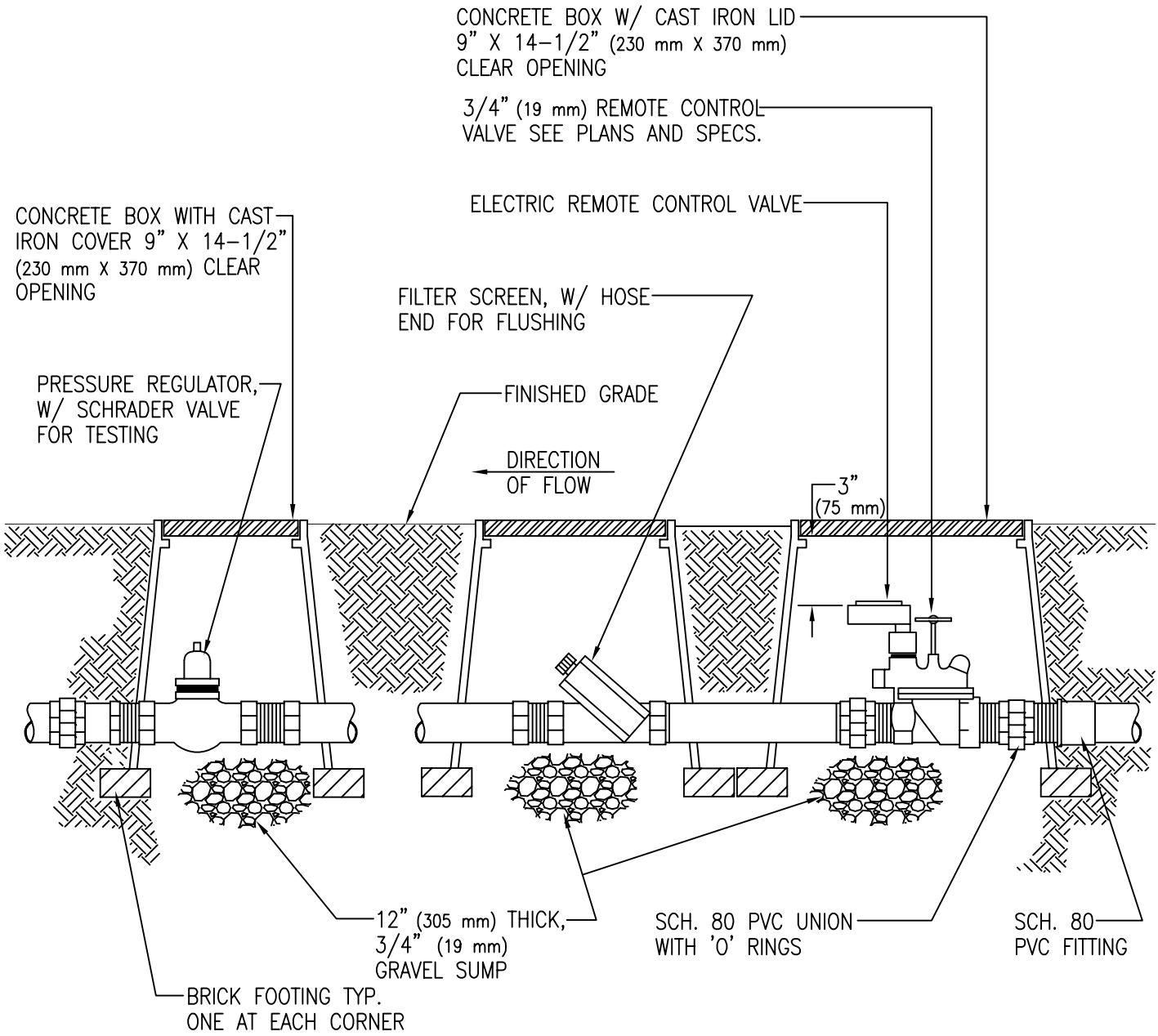

ISSUED:		STANDARD DETAIL		DETAIL NO.
1/94	CITY OF TUCSON FOUNDED 1775	DRIP ZONE\REMOTE CONTROL VALVE	THE SEAL of PIMA COUNTY ARIZONA	403
REVISED:				
7/02				SHEET 1 OF 1

403.DVG 08/03/00 14:26

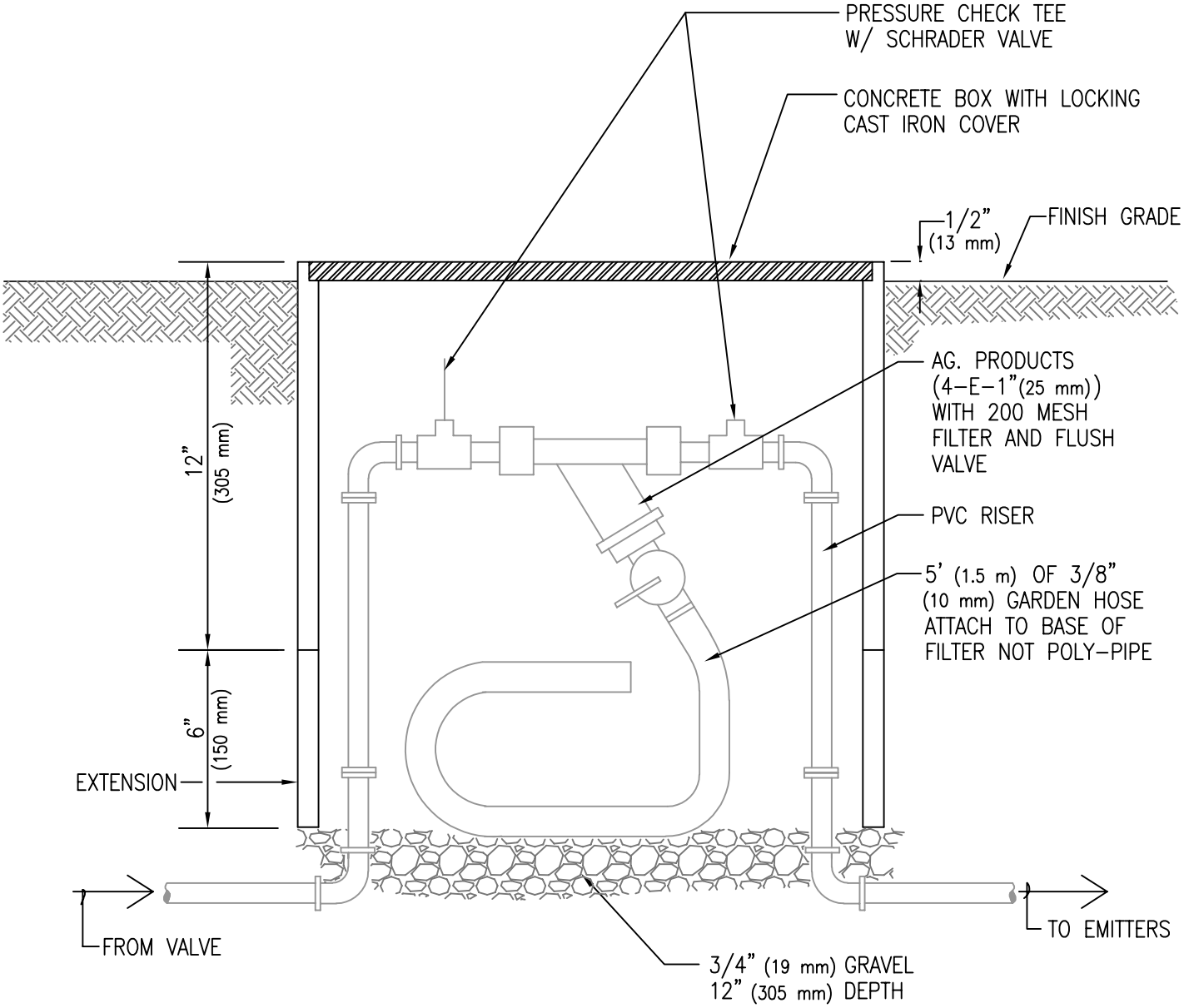

NOTE:

INSTALL FILTER AT
A 45° VERTICAL ANGLE
WITH FLUSHING VALVE
FACING UP

ISSUED:		STANDARD DETAIL		DETAIL NO.
1/94	CITY OF TUCSON FOUNDED 1775	DRIP SYSTEM FILTER	THE SEAL of PIMA COUNTY ARIZONA	404
REVISED: 7/02				SHEET 1 OF 1

404.DWG 08/03/00 14:28

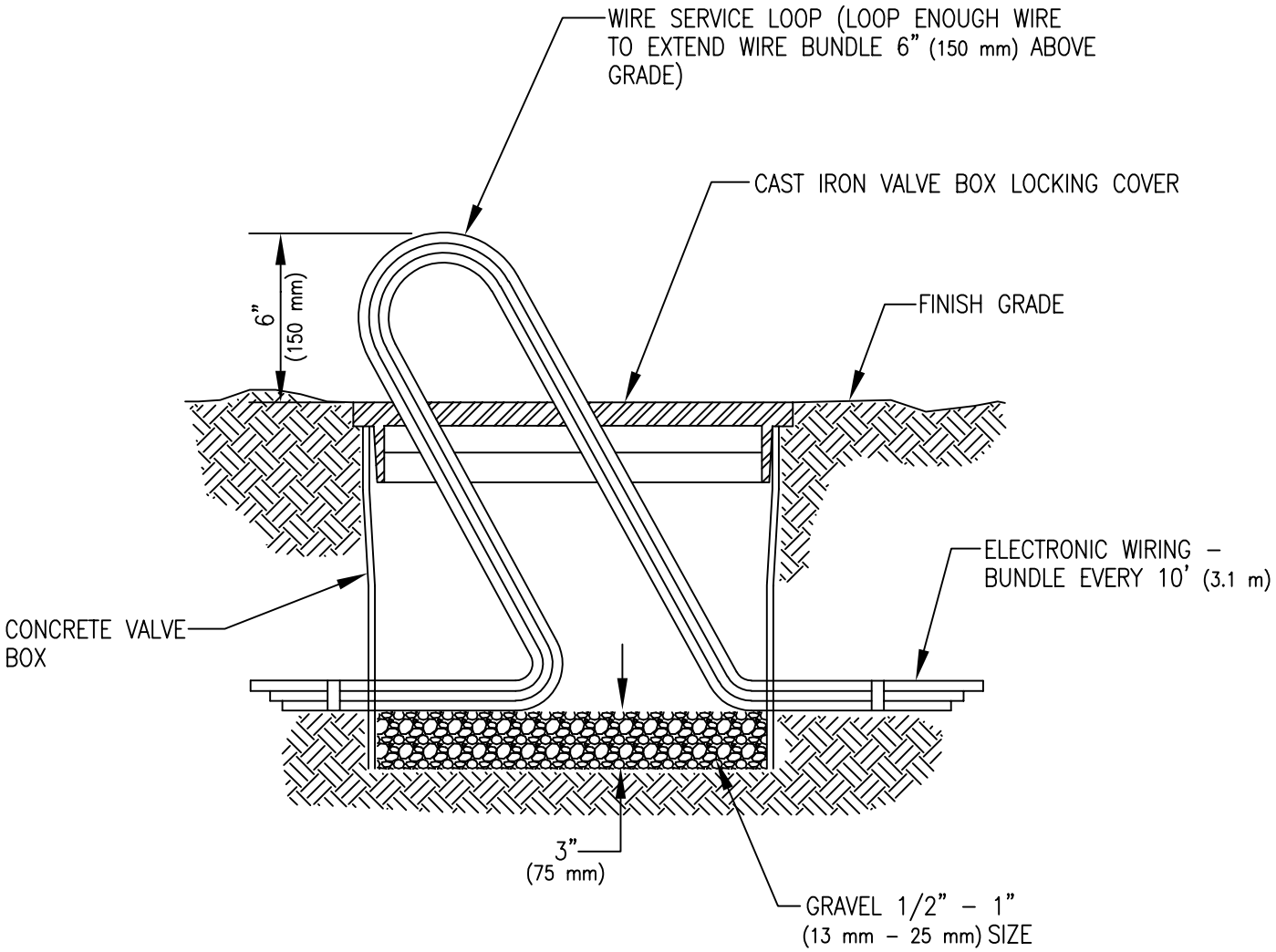

NOTE:

PULL BOXES TO BE LOCATED WHERE SPLICING OCCURS AND WHERE SHOWN ON PLANS.

ISSUED:		STANDARD DETAIL		DETAIL NO.
1/94		PULL BOX FOR 12 VOLT SYS.		405
REVISED:				
7/02				SHEET 1 OF 1

405DWG 08/03/00 14:29

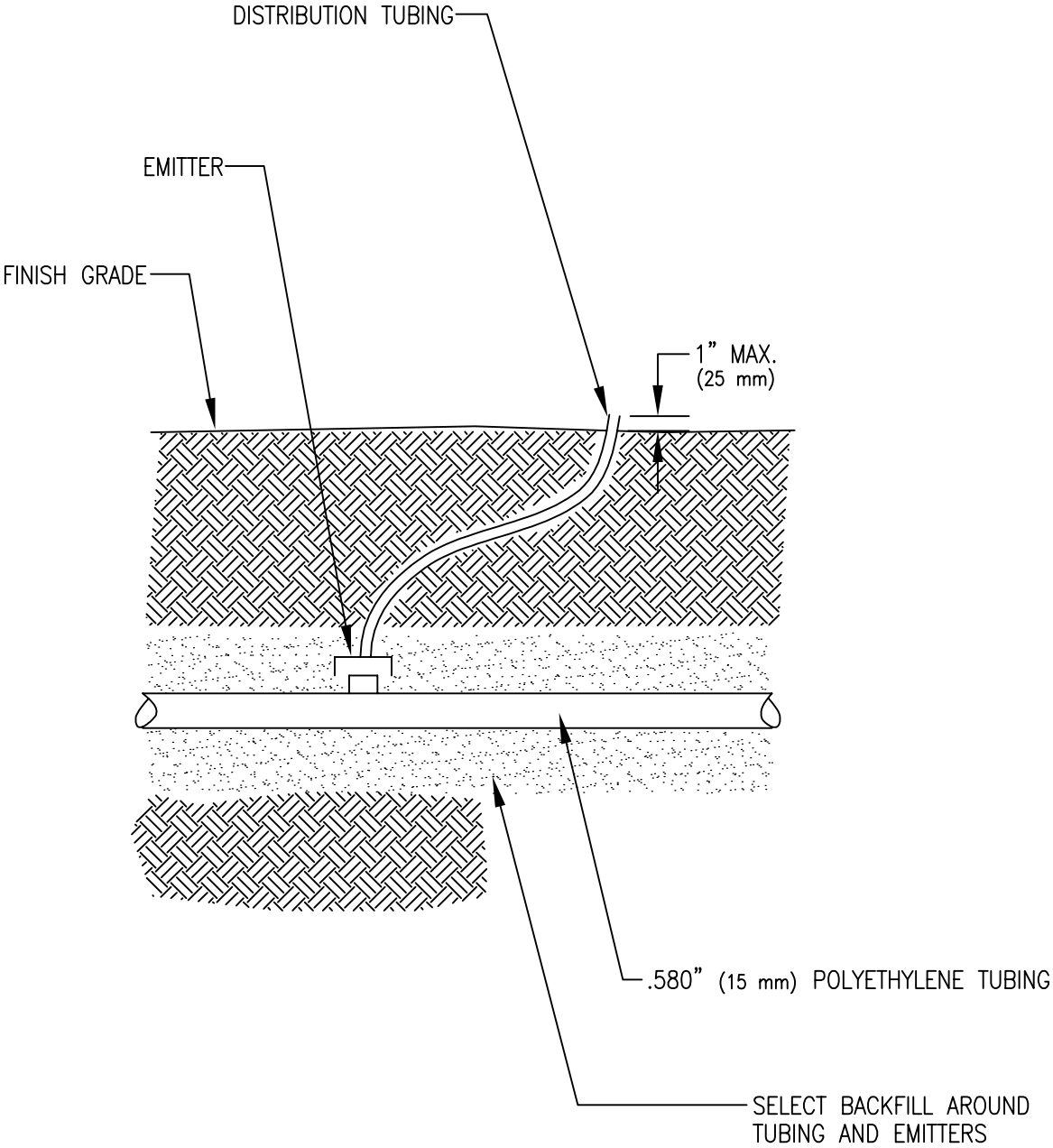

NOTES:

1. LENGTH OF DISTRIBUTION TUBING NOT TO EXCEED 6'–0" (1.8 m)

2. SELECT BACKFILL SHALL BE SAND OR SOIL FREE OF STONES LARGER THAN 1/2" (13 mm) IN DIAMETER

ISSUED:		STANDARD DETAIL		DETAIL NO.
1/94	CITY OF TUCSON FOUNDED 1775	EMITTER INSTALLATION	THE SEAL of PIMA COUNTY ARIZONA	406
REVISED:				
7/02				SHEET 1 OF 1

406.DWG 08/03/00 14:30

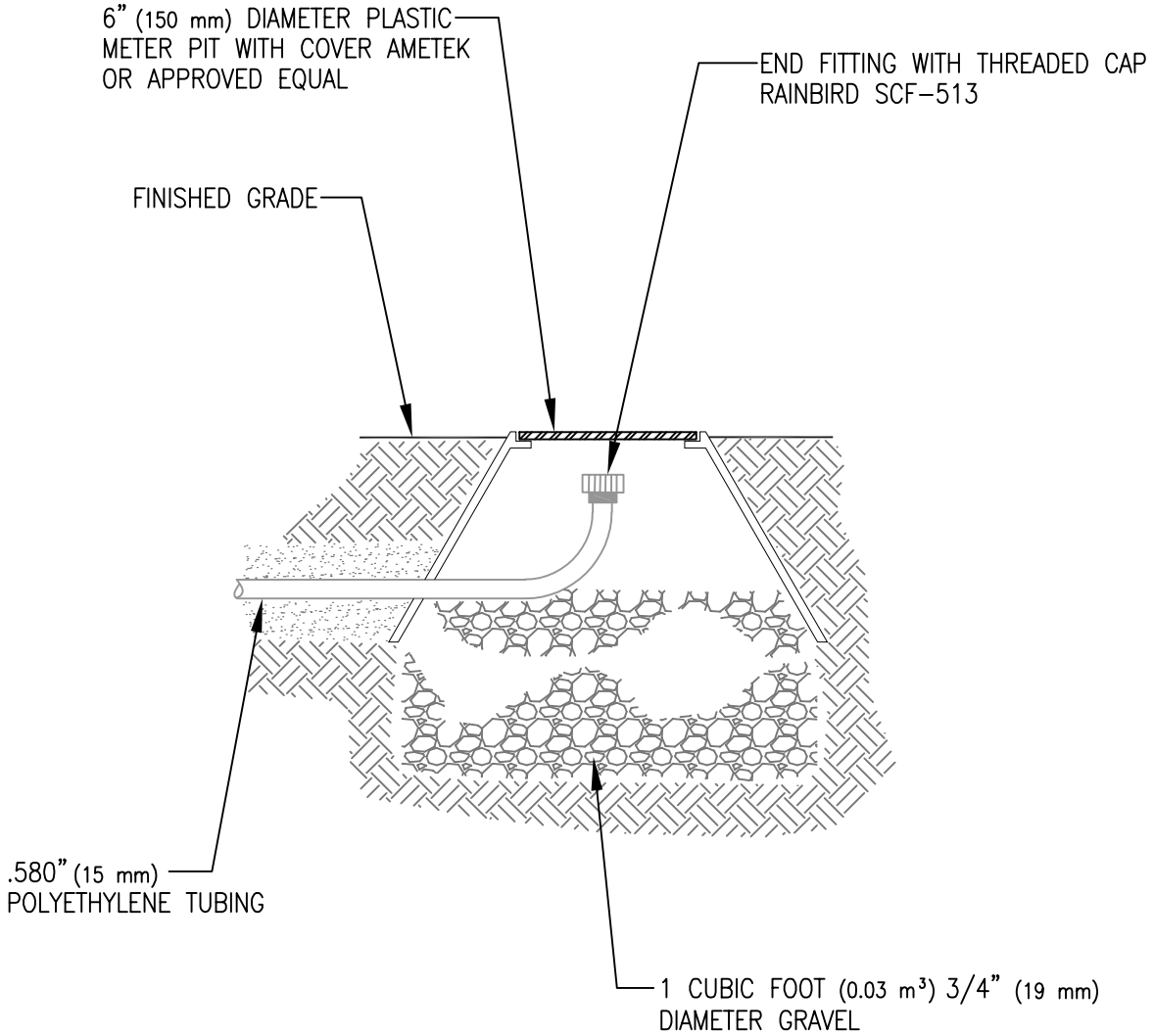

NOTE:

INSTALL END FITTING / FLUSH CAPS AT THE END OF ALL .580" (15 mm) POLYETHYLENE

ISSUED:		STANDARD DETAIL		DETAIL NO.
1/94	CITY OF TUCSON FOUNDED 1775	EMITTER LINE FLUSH	THE SEAL of PIMA COUNTY ARIZONA	407
REVISED: 7/02				SHEET 1 OF 1

407.DVG 08/03/00 14:32

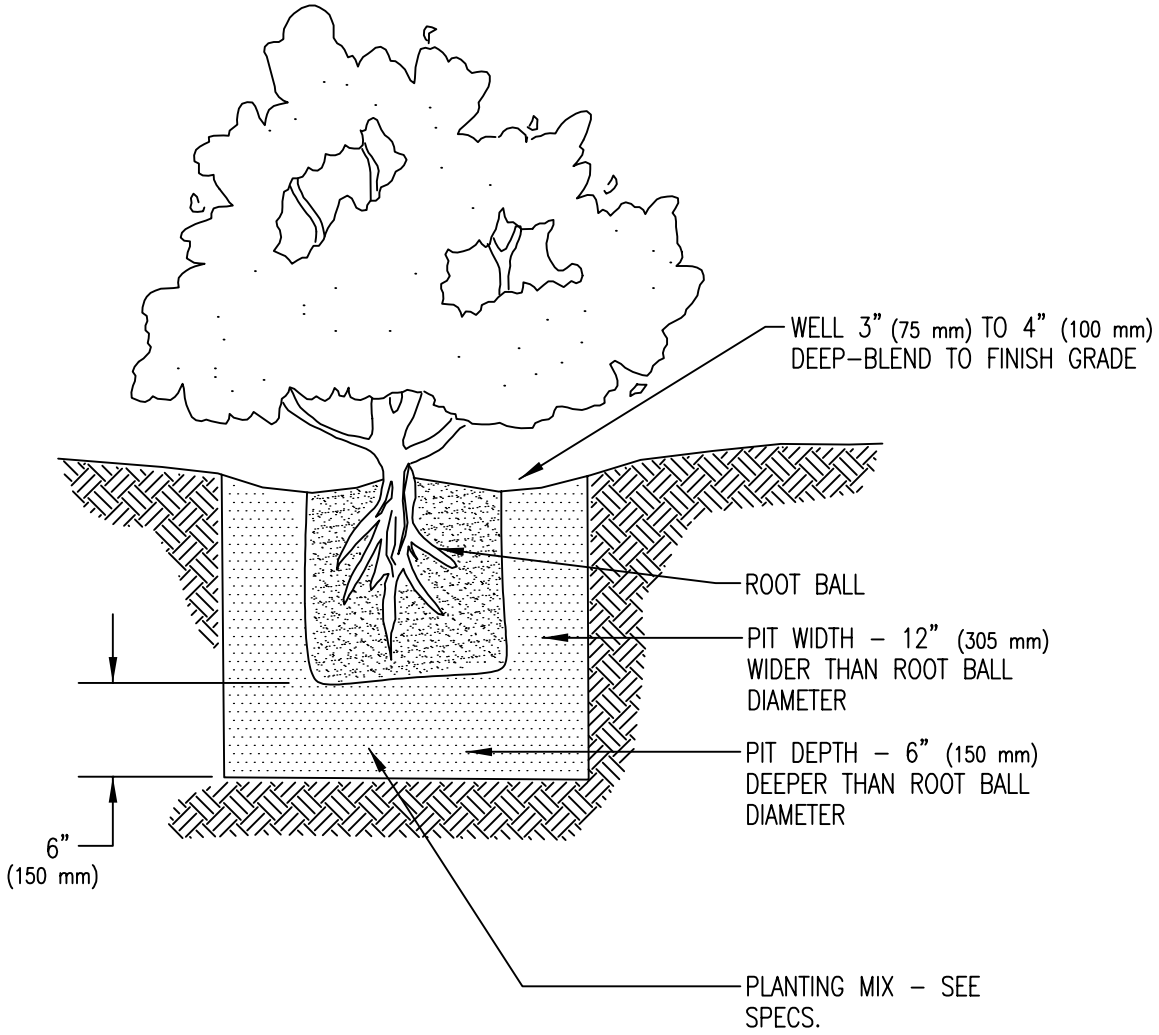

ISSUED:		STANDARD DETAIL		DETAIL NO.
1/94		SHRUB PLANTING		408
REVISED:				
7/02				SHEET 1 OF 1

408.DVG 08/03/00 14:33

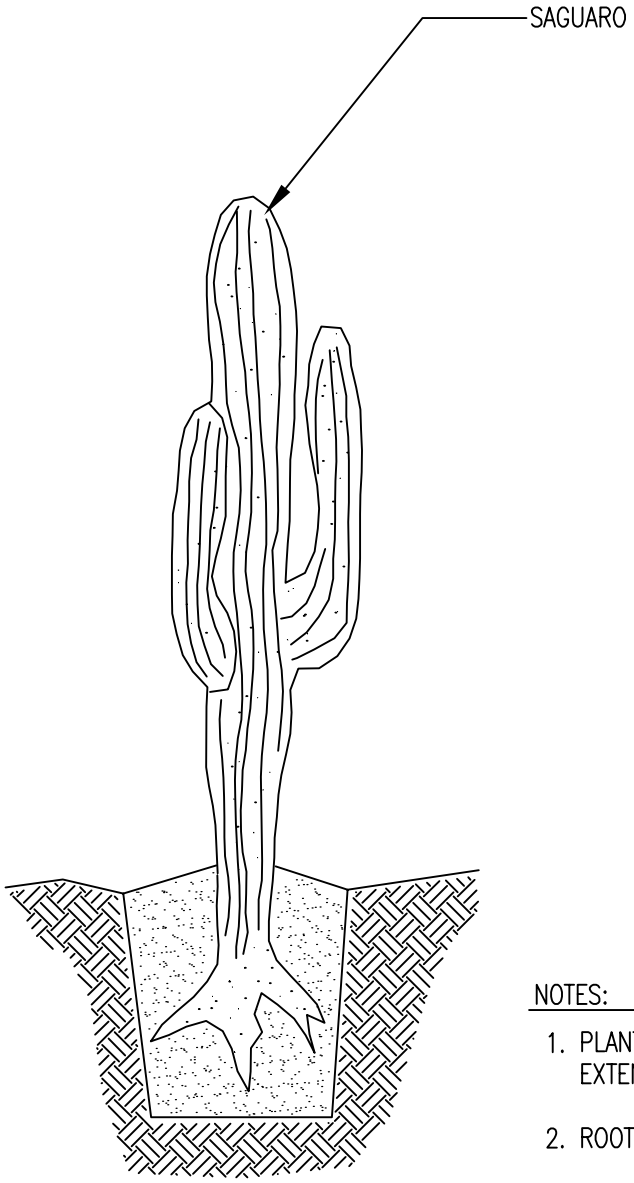

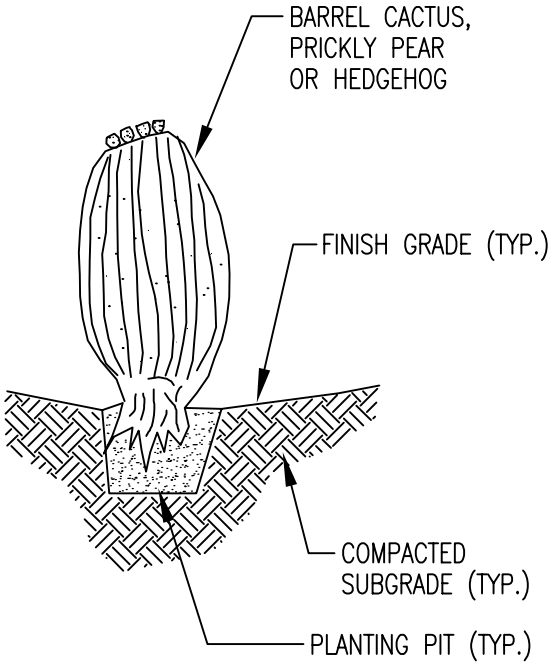

NOTES:

1. PLANT PIT TO BE 6" (150 mm) DEEPER THAN FREE EXTENSION OF ROOTS.
2. ROOT PRUNE ALL DAMAGED ROOTS.
3. USE DRY SITE SOIL ONLY IN PIT – NO MULCH.
4. DO NOT WATER FOR 3 WEEKS.
5. AT SITE, DUST ENTIRE ROOT STRUCTURE WITH WETTABLE DUSTING SULPHUR (1.5 LBS (0.5 Kg) MIN.) AS PER INDUSTRY STANDARD.

ISSUED:		STANDARD DETAIL		DETAIL NO.
1/94	CITY OF FOUNDED 1776 TUCSON	DESERT PLANTING	THE SEAL of PIMA COUNTY ARIZONA	409
REVISED:				
7/02				SHEET 1 OF 2

40901.DWG 08/03/00 14:37

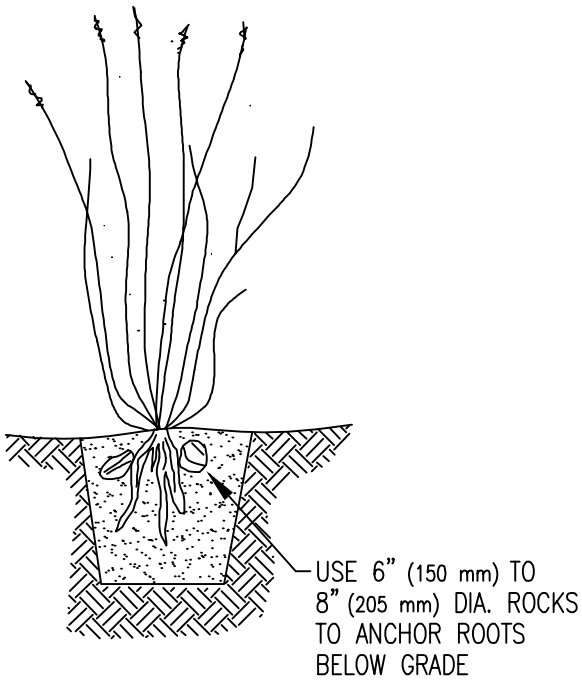

OCOTILLO

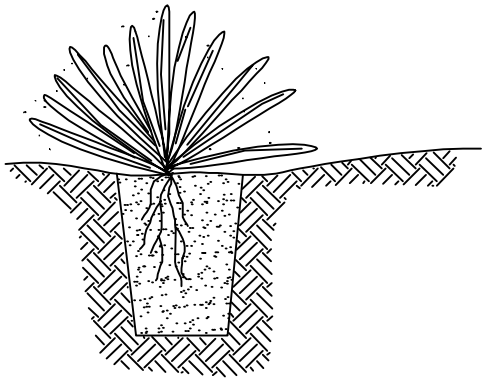

DESERT SPOON

NOTES:

1. ROOT PRUNE ALL SHREDDED OR DAMAGED ROOTS. SEAL ALL WOUNDS OR CUTS WITH PRUNING PAINT.
2. AT JOB SITE, DUST ENTIRE ROOT STRUCTURE WITH WETTABLE DUSTING SULPHUR.
3. PLANTING MIX SHALL BE 1/3 NITROGEN STABILIZED MULCH AND 2/3 SPEC. SOIL BY VOLUME.
4. PLANTING DEPTH TO BE THAT AT WHICH PLANT WAS GROWN.
5. APPLY "SUPERTHRIVE", "B1" OR OTHER APPROVED HORMONE AS DIRECTED BY THE MANUFACTURER FOR 2 WATERINGS COMMENCING IMMEDIATELY AFTER INSTALLATION. WATER WEEKLY THROUGH SUMMER.
6. NO TRANSPLANTING OPERATIONS MAY OCCUR PRIOR TO 5 DAYS BEFORE INSTALLATION ON SITE.

ISSUED:		STANDARD DETAIL		DETAIL NO.
1/94	CITY OF FOUNDED 1776 TUCSON	DESERT PLANTING	THE SEAL of PIMA COUNTY ARIZONA	409
REVISED: 7/02				SHEET 2 OF 2

40902.DVG 08/03/00 14:37

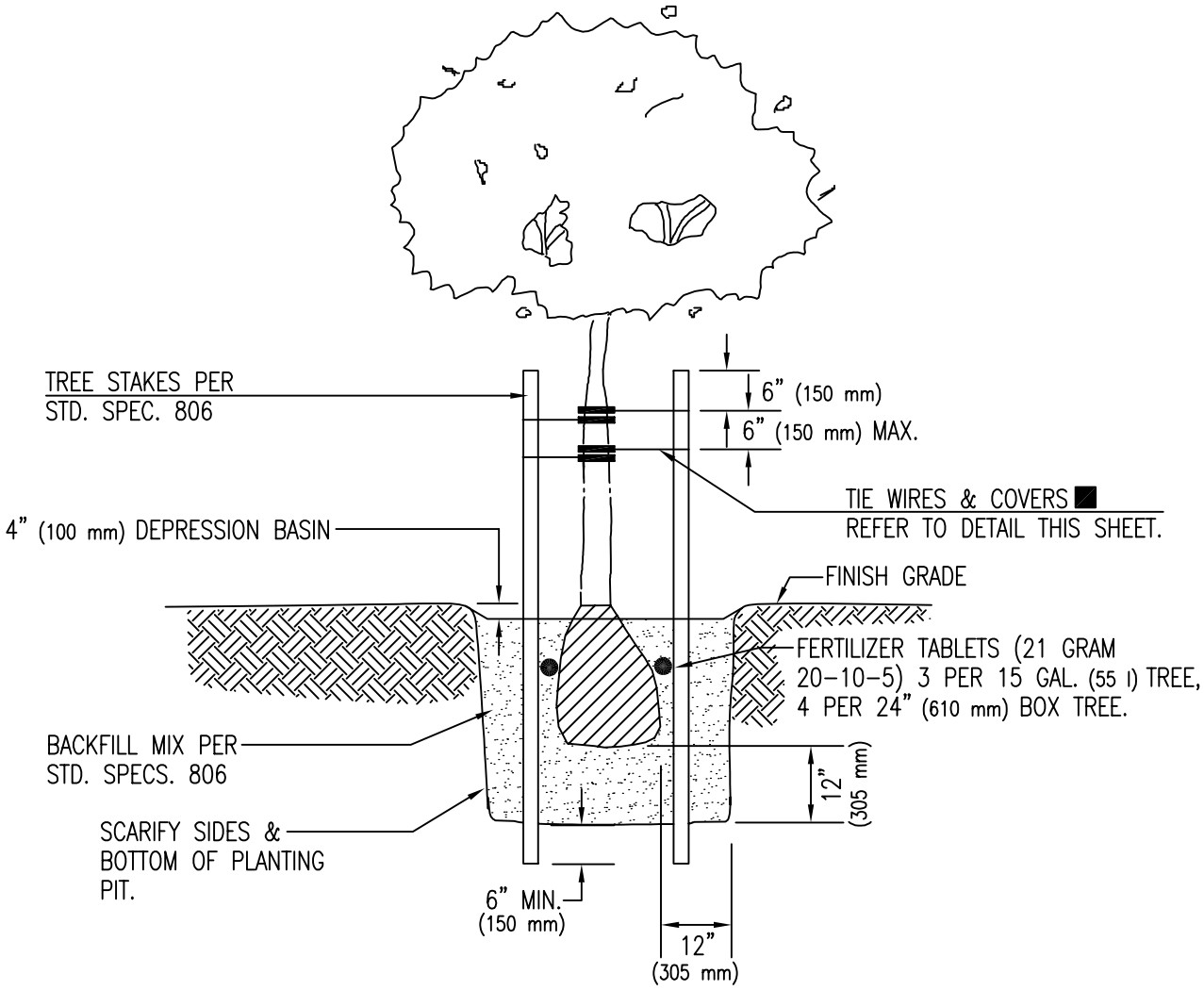

■ TIE WIRES ARE DOUBLE STRAND 12 GAUGE GALVANIZED WIRE. PROTECTION COVER IS 3/4" (19 mm) DIA. VINYL TWO-PLY FABRIC-BEARING HOSE.

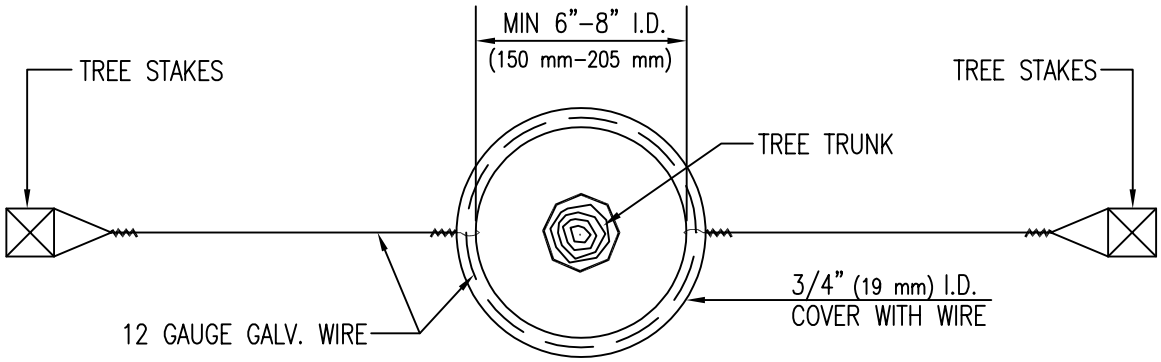

TIE WIRE AND COVER DETAIL

ISSUED:		STANDARD DETAIL		DETAIL NO.
1/94	CITY OF TUCSON	TREE PLANTING	THE SEAL of PIMA COUNTY ARIZONA	410
REVISED: 7/02				SHEET 1 OF 2

4100L.DWG 08/03/00 14:42

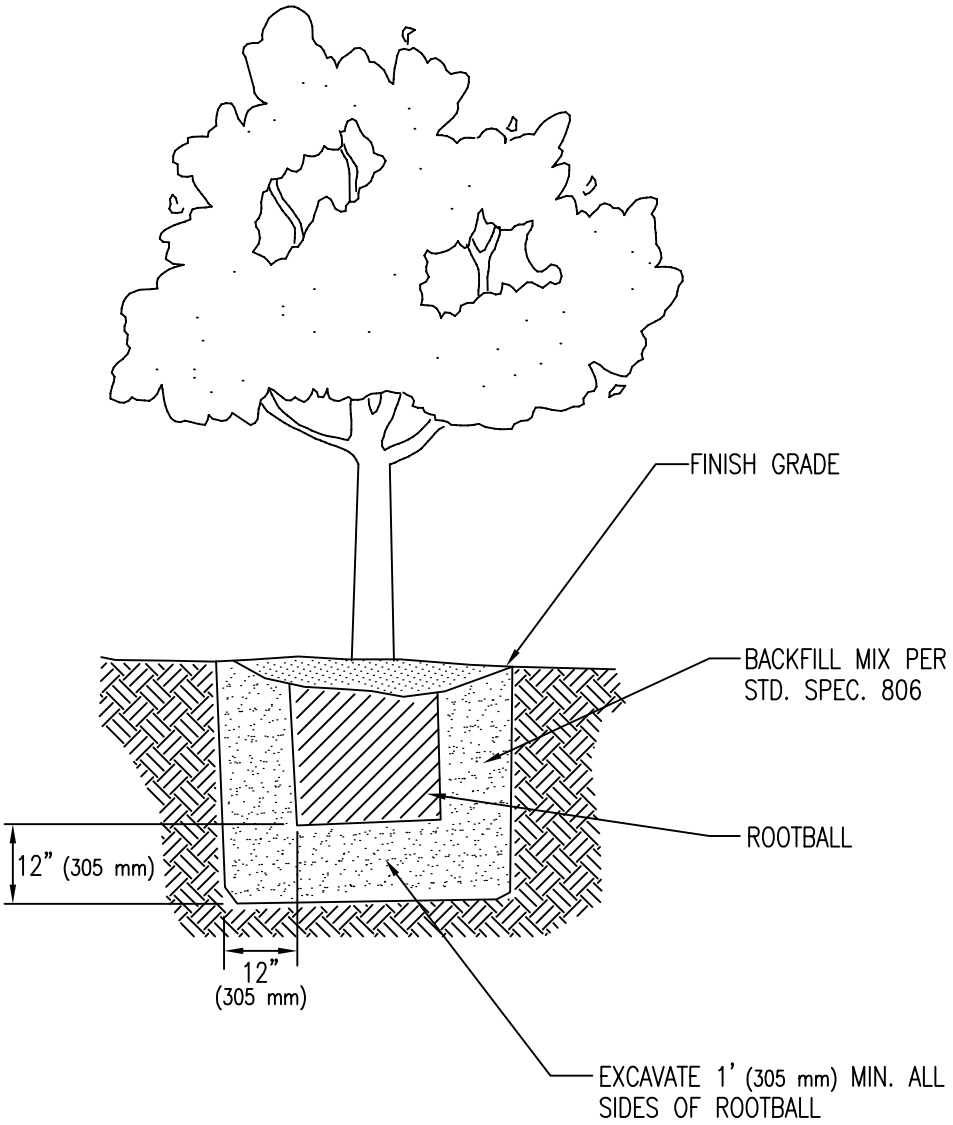

BOX TREE

ISSUED:		STANDARD DETAIL		DETAIL NO.
1/94		TREE PLANTING		410
REVISED:				
7/02				SHEET 2 OF 2

41002.DVG 07/31/00 15:17

TRAFFIC SIGNAL AND ROADWAY LIGHTING STANDARD DETAILS

DETAIL NO.	TITLE
T 101	NO. 3 1/2 PULL BOX
T 102	NO. 5 PULL BOX
T 103	NO. 5 PULL BOX EXTENSION
T 104	NO. 7 PULL BOX
T 105	NO. 7 PULL BOX EXTENSION
T 106	PULL BOX INSTALLATION
T 107	STREET POLE WIRING DIAGRAM
T 203	FOUNDATION FOR TYPE IV, V CONTROL CABNETS
T 308	TYPE I PEDESTAL CABINET AND FOUNDATION
T 309	TYPE I CONTROL CABINET
T 310	TYPE III CONTROL CABINET
T 312	TYPE IV CONTROL CABINET
T 313	TYPE V CONTROL CABINET
T 324	LIGHTING DESIGN CRITERIA
T 325	TYPE 1 SRETT LIGHTING CABINET
T 327	OPTIONAL TEE VENT
T 400	NOTES AND PLAN SYMBOLS
T 401	TYPE "A" POLE
T 405	TYPE "E" POLE AND MAST ARM
T 406	TYPE "F" POLE AND MAST ARM
T 407	TYPE "G" POLE AND MAST ARM
T 410	TYPE "J" POLE AND MAST ARM
T 411	TYPE "K" POLE AND MAST ARM
T 412	TYPE "Q" POLE AND MAST ARM
T 413	TYPE "R" POLE AND MAST ARM
T 417	POLE HAND HOLE DETAIL
T 418	POLE DRILLING DETAIL
T 419	PEDESTRIAN PUSH BUTTON POST TYPE I
T 420	PEDESTRIAN PUSH BUTTON POST TYPE II
T 421	STRAIN POLE AND MAST ARM
T 430	WOOD POLE MAST ARM
T 432	SPREAD FOUNDATION (TYPE Q AND J POLES)
T 433	SPREAD FOUNDATION (TYPE E, F, G, 1, AND 2 POLES
T 444	TYPE I STREET LIGHTING POLE
T 445	TYPE 2 STREET LIGHT POLE
T 446	STREET LIGHT POLE TYPE D AND E
T 710	6' x 6' (1.830 m X 1.830 m) LOOP DETECTOR
T 711	BICYCLE LANE LOOP DETECTOR
T 712	PRESENCE LOOP DETECTOR
T 713	UNDERGROUND CONDUIT
T 714	6X6 PRESENCE LOOP DETECTOR
T 800	CITY TUCSON AND PIMA COUNTY STANDARD PHASING DETAIL
T 801	SIGNAL FACES WITH BACKPLATES
T 802	VISORS 8" (205 mm) AND 12" (305 mm) SIGNALS
T 803	TYPICAL SIGNAL HEAD
T 804	MAN/HAND STYLE PEDESTRIAN SIGNAL

TRAFFIC SIGNAL AND ROADWAY LIGHTING STANDARD DETAILS

T 901	TYPE I AND II MOUNTING ASSEMBLY
T 902	TYPE III AND IV MOUNTING ASSEMBLY
T 903	TYPE V MOUNTING ASSEMBLY
T 904	TYPE VI MOUNTING ASSEMBLY
T 905	TYPE VII MOUNTING ASSEMBLY
T 906	TYPE VIII MOUNTING ASSEMBLY
T 907	TYPE IX MOUNTING ASSEMBLY
T 908	TYPE X MOUNTING ASSEMBLY
T 909	TYPE XI MOUNTING ASSEMBLY
T 910	SPAN WIRE MOUNTING TERMINAL HANGER
T 911	2-WAY SPAN WIRE MOUNTING ASSEMBLY
T 912	3-WAY SPAN WIRE MOUNTING ASSEMBLY
T 913	4-WAY SPAN WIRE MOUNTING ASSEMBLY
T 1001	MISCELLANEOUS SIGNAL PARTS
T 1002	MAST ARM PLUMBIZERS
T 1003	POLE PLATE DETAIL
T 1004	TERMINAL COMPARTMENT SIDE MOUNT AND POLE TOP MOUNT
T 1101	TYPE I PEDESTRIAN PUSH BUTTON DETAIL
T 1103	PLACARDS FOR PEDESTRIAN PUSH BUTTONS
T 1104	SIGNS FOR INTERNATIONAL SYMBOL PUSH BUTTON
T 1105	PEDESTRIAN PUSH BUTTON MEDIAN CROSSWALK LOCATION
T 1505	PHOTOELECTRIC CELL MOUNTING
T 1603	GUARD POST
T 1701	UNMETERED SERVICE STREET LIGHT ASSEMBLY
T 1702	MID-SPAN JUMPER POLE
T 1801	METERED SERVICE PEDESTAL
T 1803	UNMETERED SERVICE PEDESTAL
T 1901	PRE-EMPT SENSOR WIRING
T 1902	PRE-EMPT SENSOR ASSEMBLY
T 1903	PRE-EMPT STROBE ASSEMBLY
T 1904	ILLUMINATED STREET SIGN (I.S.S.) INSTALLATION
T 1905	VIDEO DETECTION SYSTEM AUTO SCOPE INSTALLATION
T 2001	TELEPHONE DROP
T 2101	SPAN WIRE TRAFFIC SIGNAL INSTALLATION

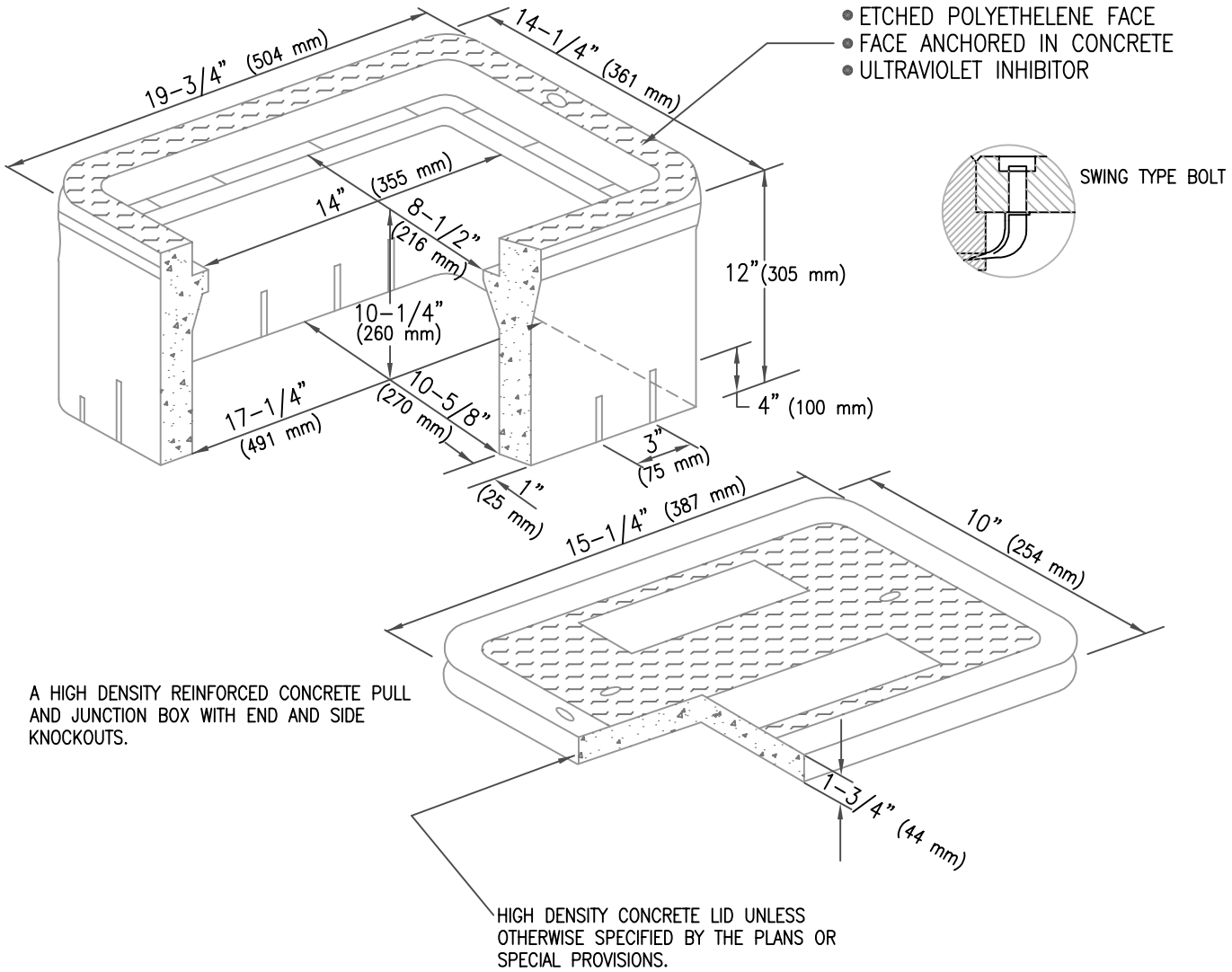

NOTES:

1. SEE SPECIFICATIONS FOR MATERIAL AND CONSTRUCTION.
2. COVERS SHALL BE SECURED WITH 3/8" (9.5 mm) "L" BOLTS, NUTS, AND WASHERS, WHICH SHALL BE OF BRASS, STAINLESS STEEL, OR OTHER CORROSION RESISTANT MATERIAL. STAINLESS STEEL SHALL HAVE A CHROMIUM CONTENT OF NOT LESS THAN 18% AND A NICKEL CONTENT OF NOT LESS THAN 8%. NUTS SHALL BE RECESSED BELOW TOP SURFACE OF COVER.
3. COVER LETTERING SHALL BE 1" (25 mm) LETTERS CAST IN STANDARD MARKINGS, "TRAFFIC SIGNAL" OR STREET LIGHTING".
4. THE TOP OF THE COVERS SHALL SIT FLUSH WITH THE TOP EDGE OF THE PULL BOX.
5. SEE T 106 FOR TYPICAL INSTALLATION DETAILS.
6. STEEL PULL BOX COVERS SHALL BE USED WHEN SPECIFIED.

ISSUED:		STANDARD DETAIL		DETAIL NO.
8/92	CITY OF TUCSON FOUNDED 1775	NO. 3-1/2 PULL BOX	THE SEAL of PIMA COUNTY ARIZONA	T 101
REVISED: 10/02				SHEET 1 OF 1

TS1-1.DWG 12/07/00 10:11

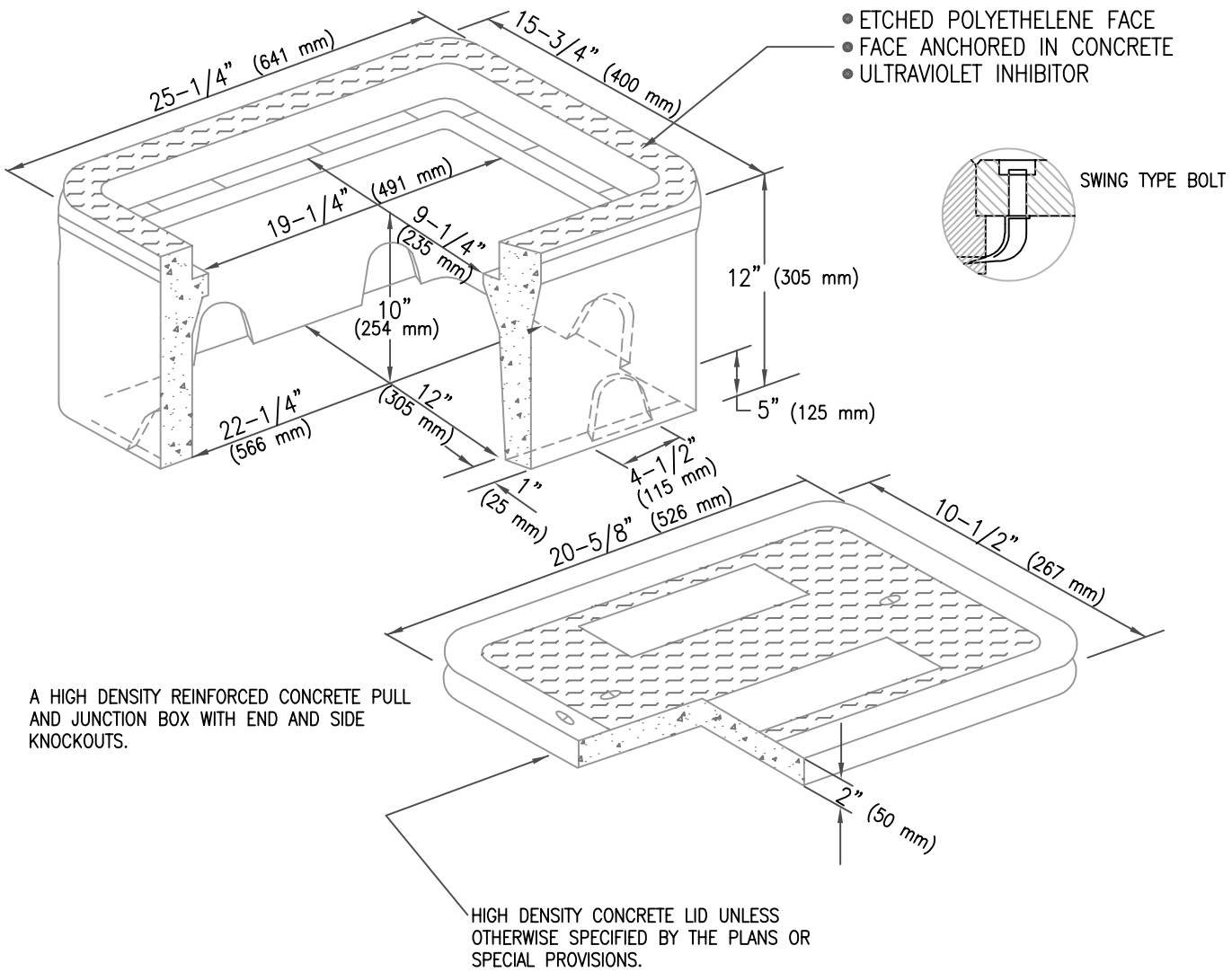

NOTES:

1. SEE SPECIFICATIONS FOR MATERIAL AND CONSTRUCTION.
2. COVERS SHALL BE SECURED WITH 3/8" (9.5 mm) "L" BOLTS, NUTS, AND WASHERS, WHICH SHALL BE OF BRASS, STAINLESS STEEL, OR OTHER CORROSION RESISTANT MATERIAL. STAINLESS STEEL SHALL HAVE A CHROMIUM CONTENT OF NOT LESS THAN 18% AND A NICKEL CONTENT OF NOT LESS THAN 8%. NUTS SHALL BE RECESSED BELOW TOP SURFACE OF COVER.
3. COVER LETTERING SHALL BE 1" (25 mm) LETTERS CAST IN STANDARD MARKINGS, "TRAFFIC SIGNAL" OR STREET LIGHTING".
4. THE TOP OF THE COVER SHALL SIT FLUSH WITH THE TOP EDGE OF THE PULL BOX.
5. SEE T 104 FOR LIFT EYE SLOT DETAILS.
6. SEE T 106 FOR TYPICAL INSTALLATION DETAILS.
7. STEEL PULL BOX COVERS SHALL BE USED WHEN SPECIFIED.

ISSUED:		STANDARD DETAIL		DETAIL NO.
8/92	CITY OF TUCSON FOUNDED 1775	NO. 5 PULL BOX	THE SEAL of PIMA COUNTY ARIZONA	T 102
REVISED: 10/02				SHEET 1 OF 1

TS1-2.DWG 12/07/00 10:16

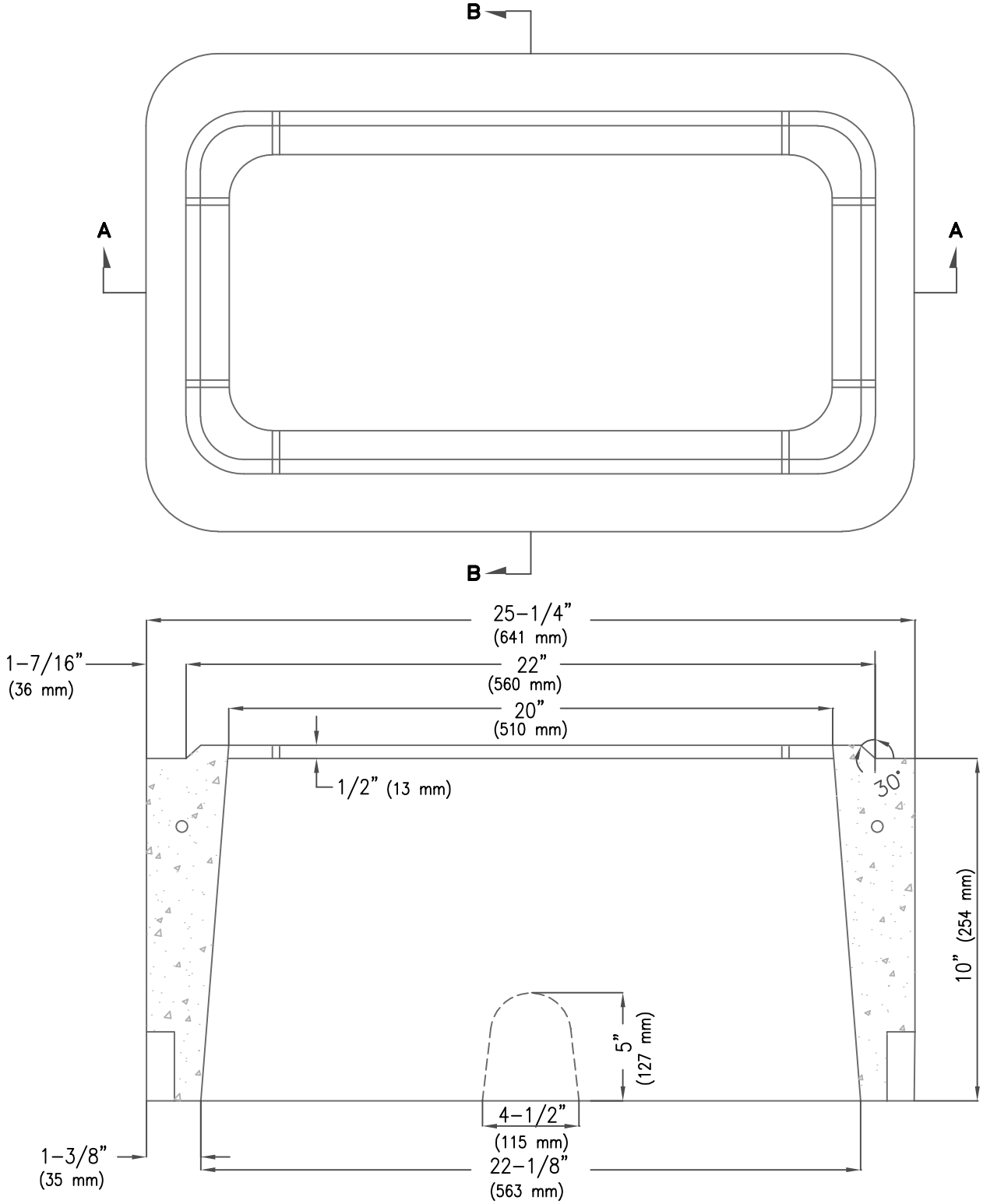

SECTION A-A

NOTE: USE STEEL PULL BOX COVERS WHEN SPECIFIED BY THE PLANS OR SPECIAL PROVISIONS.

ISSUED:		STANDARD DETAIL		DETAIL NO.
8/92		NO. 5 PULL BOX EXTENSION		T 103
REVISED:				
10/02				SHEET 1 OF 2

TS1-3-1.DWG 12/07/00 10:17

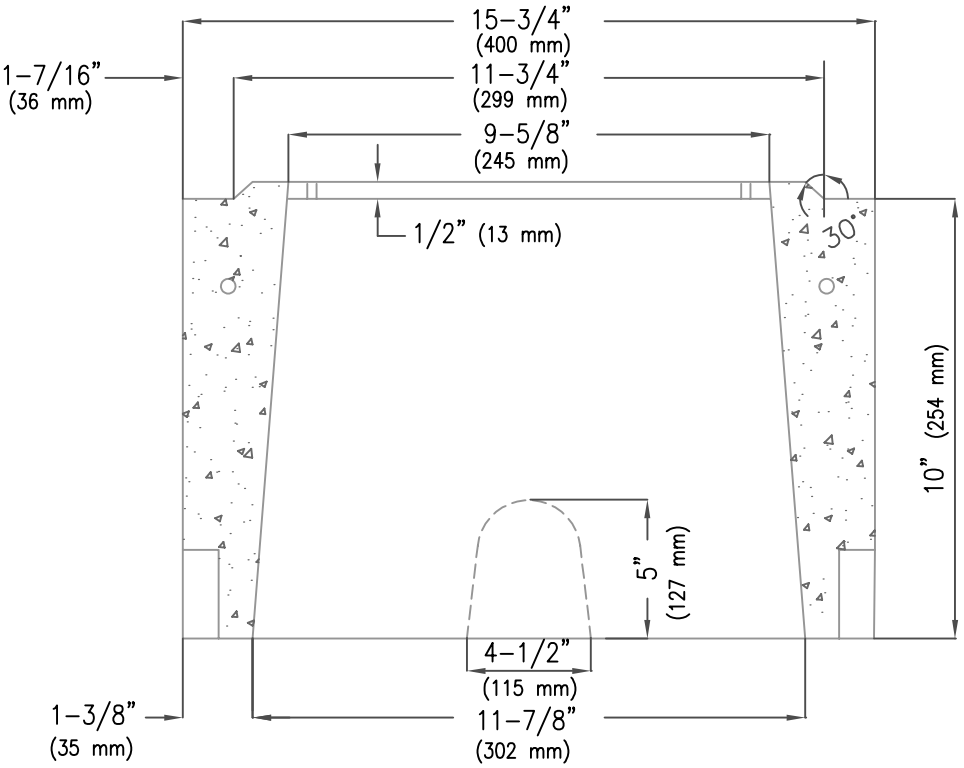

SECTION B-B

NOTES:

1. SEE SPECIFICATIONS FOR MATERIAL AND CONSTRUCTION.
2. TOP LOCKING BEAD MAY BE EITHER CONTINUOUS, LOCATED AT SIDES ONLY, OR LOCATED AT CORNERS ONLY.

NOTE: USE STEEL PULL BOX COVERS WHEN SPECIFIED BY THE PLANS OR SPECIAL PROVISIONS.

ISSUED:		STANDARD DETAIL		DETAIL NO.
8/92		NO. 5 PULL BOX EXTENSION		T 103
REVISED:				
10/02				SHEET 2 OF 2

TS1-3-2.DWG 12/07/00 10:17

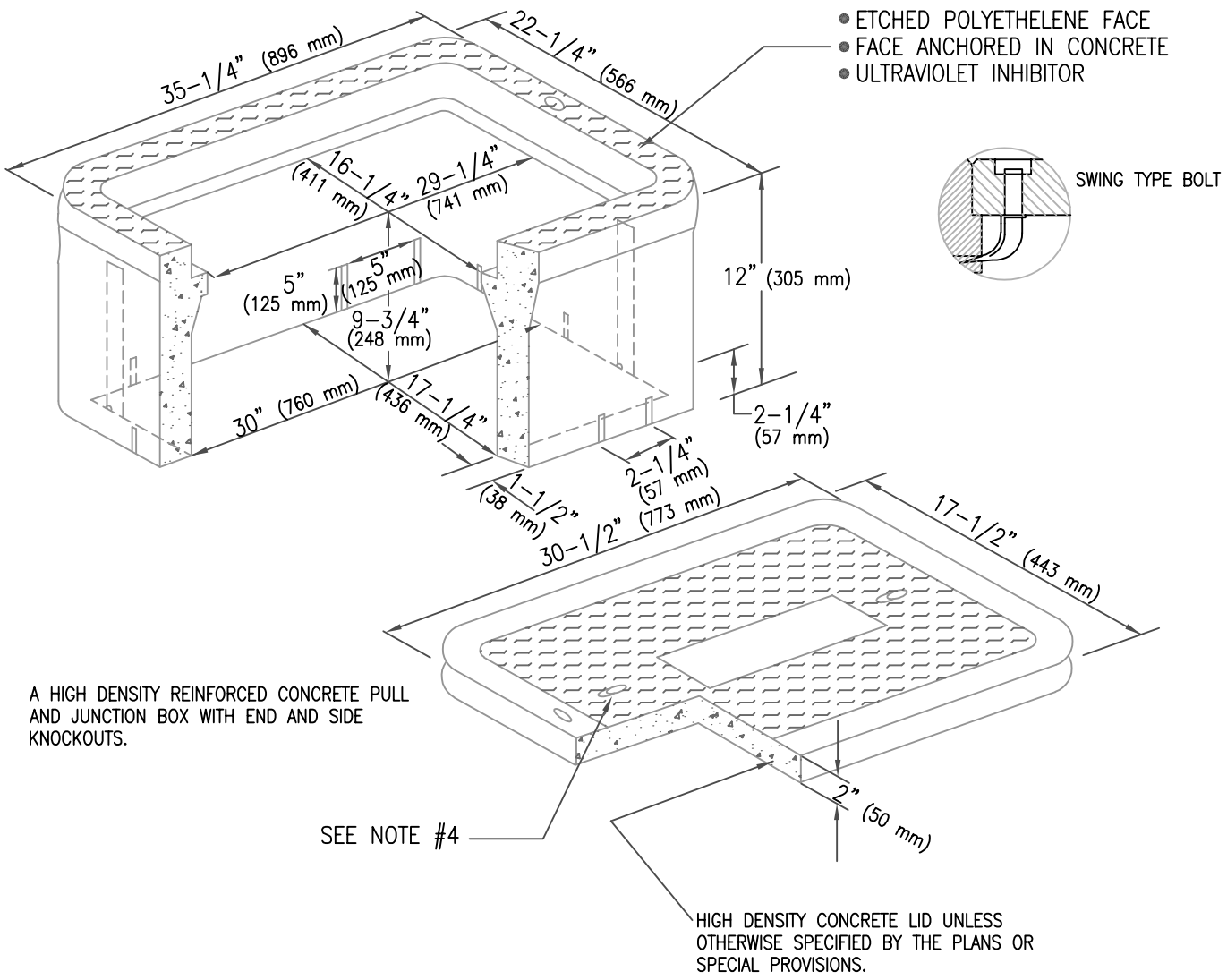

NOTES:

1. SEE SPECIFICATIONS FOR MATERIAL AND CONSTRUCTION.

2. COVERS SHALL BE SECURED WITH 3/8" (9.5 mm) "L" BOLTS, NUTS, AND WASHERS, WHICH SHALL BE OF BRASS, STAINLESS STEEL, OR OTHER CORROSION RESISTANT MATERIAL. STAINLESS STEEL SHALL HAVE A CHROMIUM CONTENT OF NOT LESS THAN 18% AND A NICKEL CONTENT OF NOT LESS THAN 8%. NUTS SHALL BE RECESSED BELOW TOP SURFACE OF COVER.

3. COVER LETTERING SHALL BE 1" (25 mm) LETTERS CAST IN STANDARD MARKINGS: "TRAFFIC SIGNAL", "STREET LIGHTING", OR "COMMUNICATION".

4. SEE T 104 FOR LIFT EYE SLOT DETAILS.

5. SEE T 106 FOR TYPICAL INSTALLATION DETAILS.

NOTE: USE STEEL PULL BOX COVERS WHEN SPECIFIED BY THE PLANS OR SPECIAL PROVISIONS.

ISSUED:		STANDARD DETAIL		DETAIL NO.
8/92	CITY OF TUCSON FOUNDED 1775	NO. 7 PULL BOX	THE SEAL of PIMA COUNTY ARIZONA	T 104
REVISED: 10/02				SHEET 1 OF 1

TS1-4.DWG 12/07/00 10:19

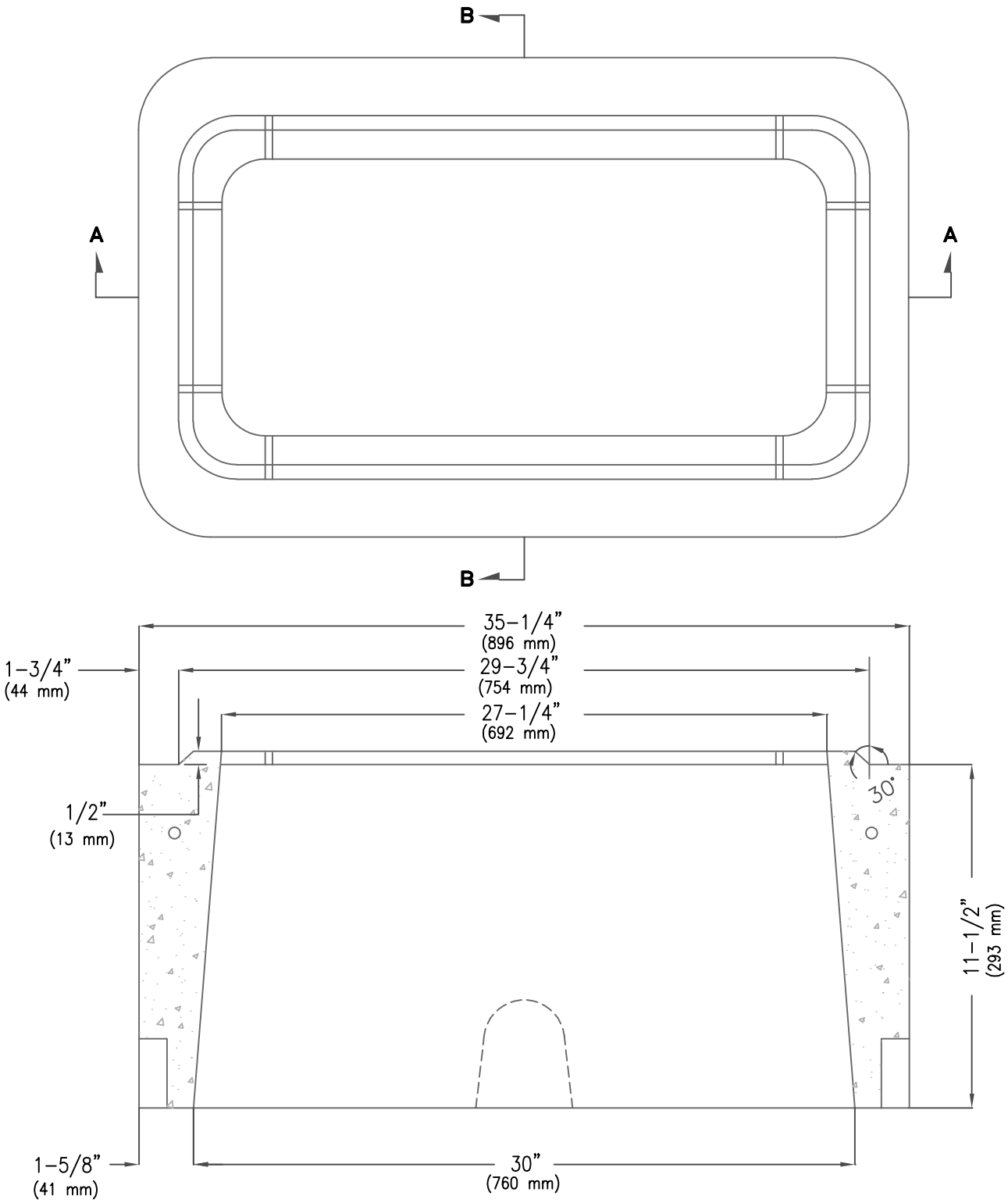

SECTION A-A

NOTE: USE STEEL PULL BOX COVERS WHEN SPECIFIED BY THE PLANS OR SPECIAL PROVISIONS.

ISSUED:		STANDARD DETAIL		DETAIL NO.
8/92		NO. 7 PULL BOX EXTENSION		T 105
REVISED:				
10/02				SHEET 1 OF 2

TS1-5-1.DWG 12/07/00 10:19

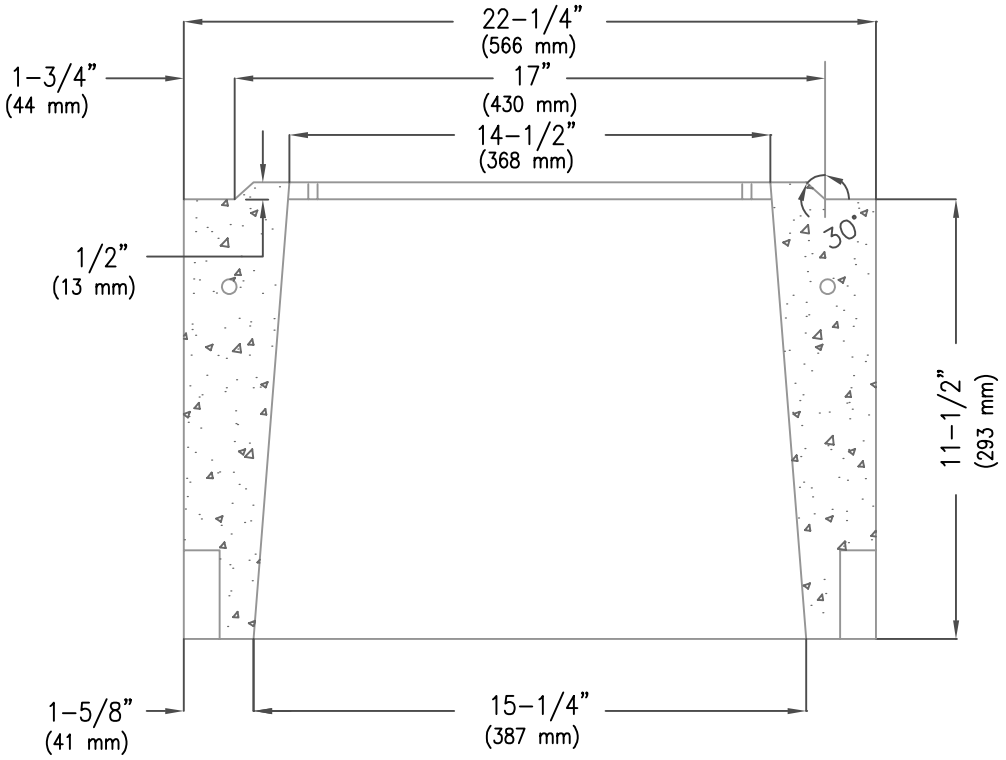

SECTION B-B

NOTES:

1. SEE SPECIFICATIONS FOR MATERIAL AND CONSTRUCTION.
2. TOP LOCKING BEAD MAY BE EITHER CONTINUOUS, LOCATED AT SIDES ONLY, OR LOCATED AT CORNERS ONLY.
3. SEE T 106 FOR TYPICAL INSTALLATION DETAILS.

NOTE: USE STEEL PULL BOX COVERS WHEN SPECIFIED.

ISSUED:		STANDARD DETAIL		DETAIL NO.
8/92		NO. 7 PULL BOX EXTENSION		T 105
REVISED:				
10/02				SHEET 2 OF 2

TS1-5-2.DWG 12/07/00 10:20

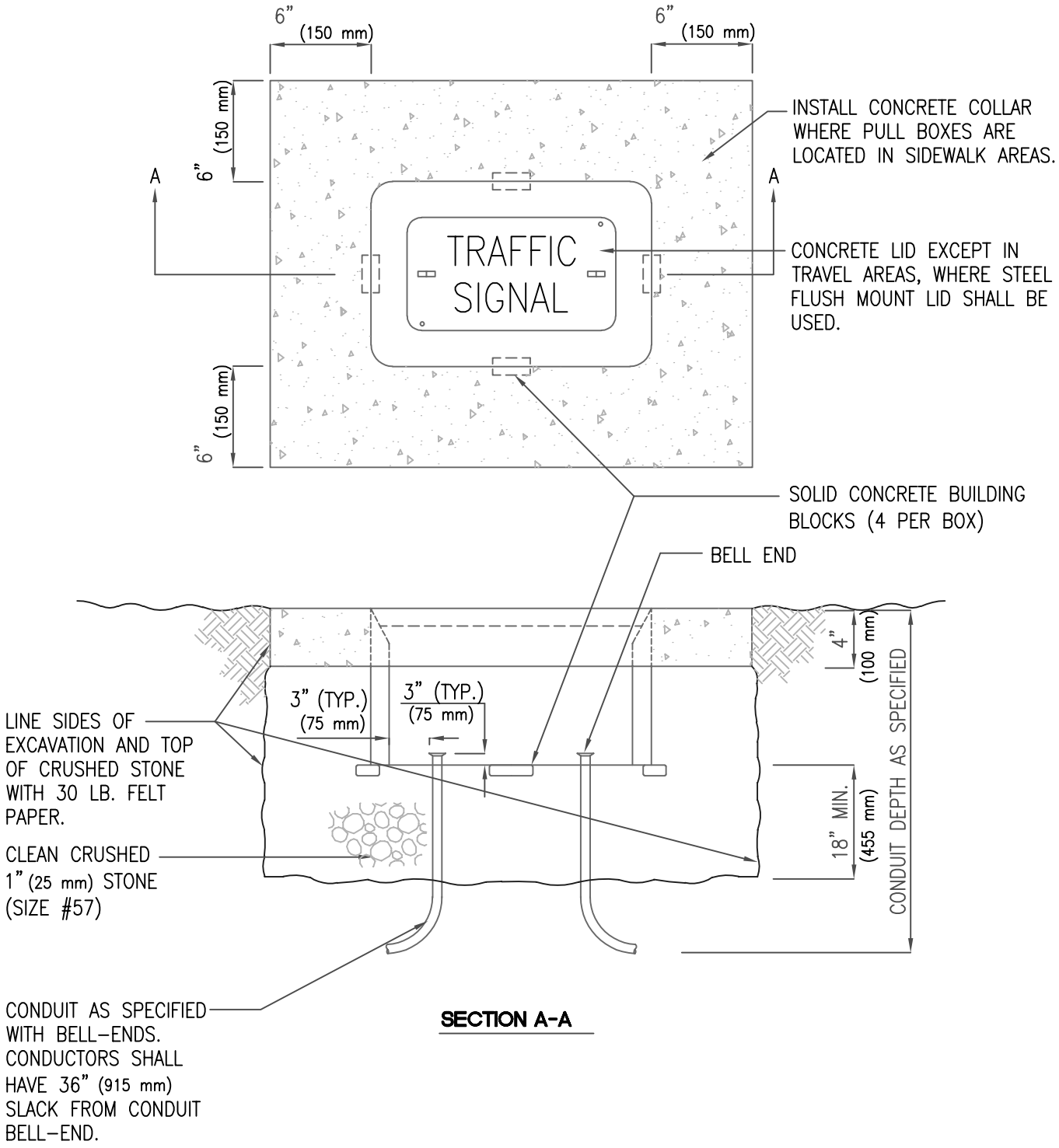

SECTION A-A

ISSUED:		STANDARD DETAIL		DETAIL NO.
8/92	CITY OF TUCSON FOUNDED 1775	PULL BOX INSTALLATION	THE SEAL of PIMA COUNTY ARIZONA	T 106
REVISED: 11/04				SHEET 1 OF 1

TS1-6.DWG 12/07/00 10:21

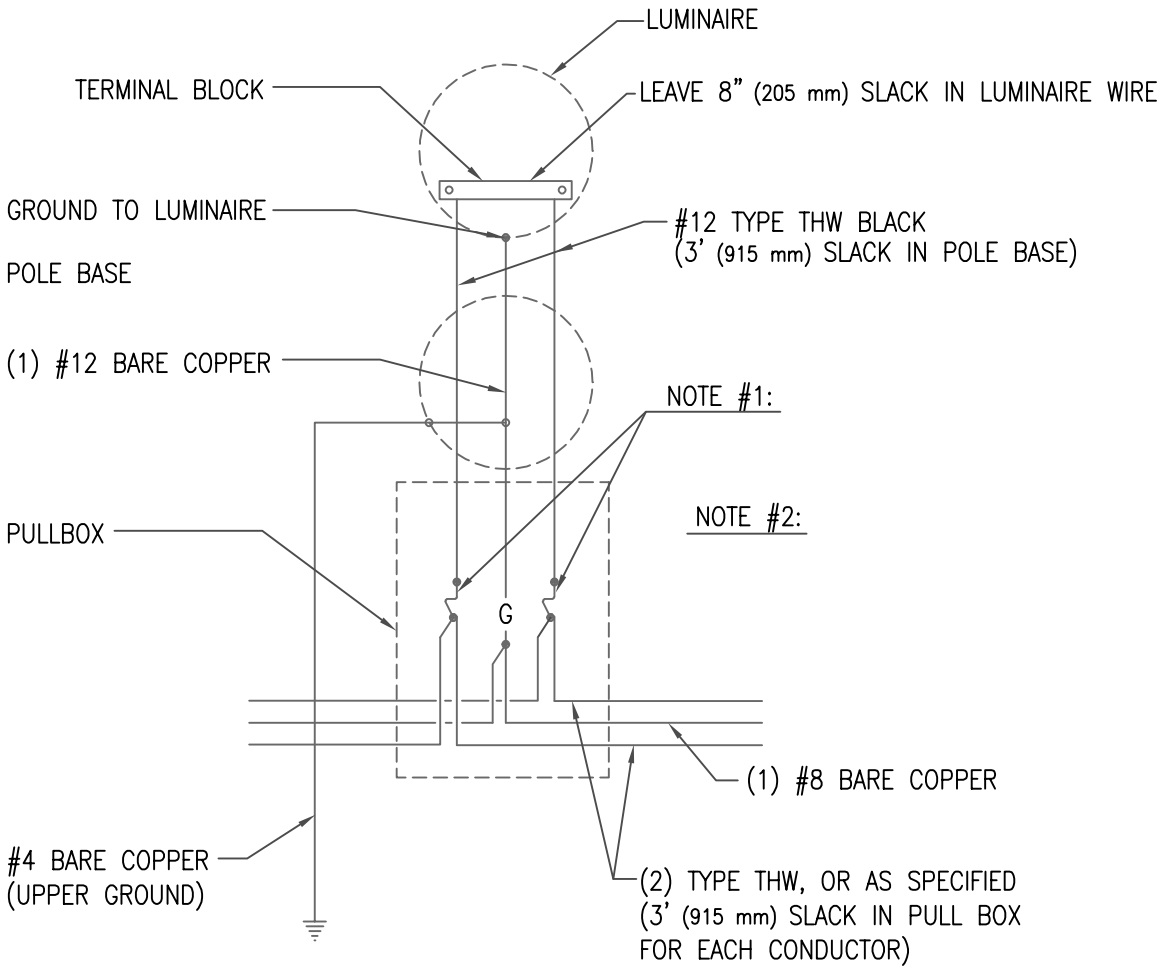

NOTES:

1. (2) SINGLE POLE BUSS IN THE LINE WATERPROOF FUSE HOLDER.

   600 VOLT KTK TYPE FUSE SIZE AS SPECIFIED ON IN-LINE FUSE SIZES TABLE.

2. ONLY ONE FUSE REQUIRED FOR 120 VOLT SYSTEM USE FNM TYPE 250 VOLT FUSES FOR 120/240 VOLT SYSTEMS.

3. FOR 120 VOLT SYSTEMS NEUTRAL SHALL BE WHITE. TAPE COLOR CODING NOT ACCEPTABLE.

4. IN NO CASE THE FUSE SIZE SHALL BE LARGER THAN 20 AMP FOR #12 THW COPPER (NEC ART 310).

5. IN-LINE FUSE CONNECTORS SHALL BE THREADED-LOCKING TYPE AND PROVIDE A WATERTIGHT CONNECTION.

IN-LINE FUSE SIZES

HPS LUMINAIRE WATTAGE	LINE VOLTAGE		
	120	240	480
	AMPERAGE RATING		
100	4	3	1
150	6	3	5
250	10	5	5
400	15	6	5

ISSUED:		STANDARD DETAIL		DETAIL NO.
8/92	CITY OF TUCSON FOUNDED 1775	STREET LIGHT POLE WIRING DIAGRAM	THE SEAL of PIMA COUNTY ARIZONA	T 107
REVISED: 11/04				SHEET 1 OF 1

TS1-7.DWG 12/07/00 10:23

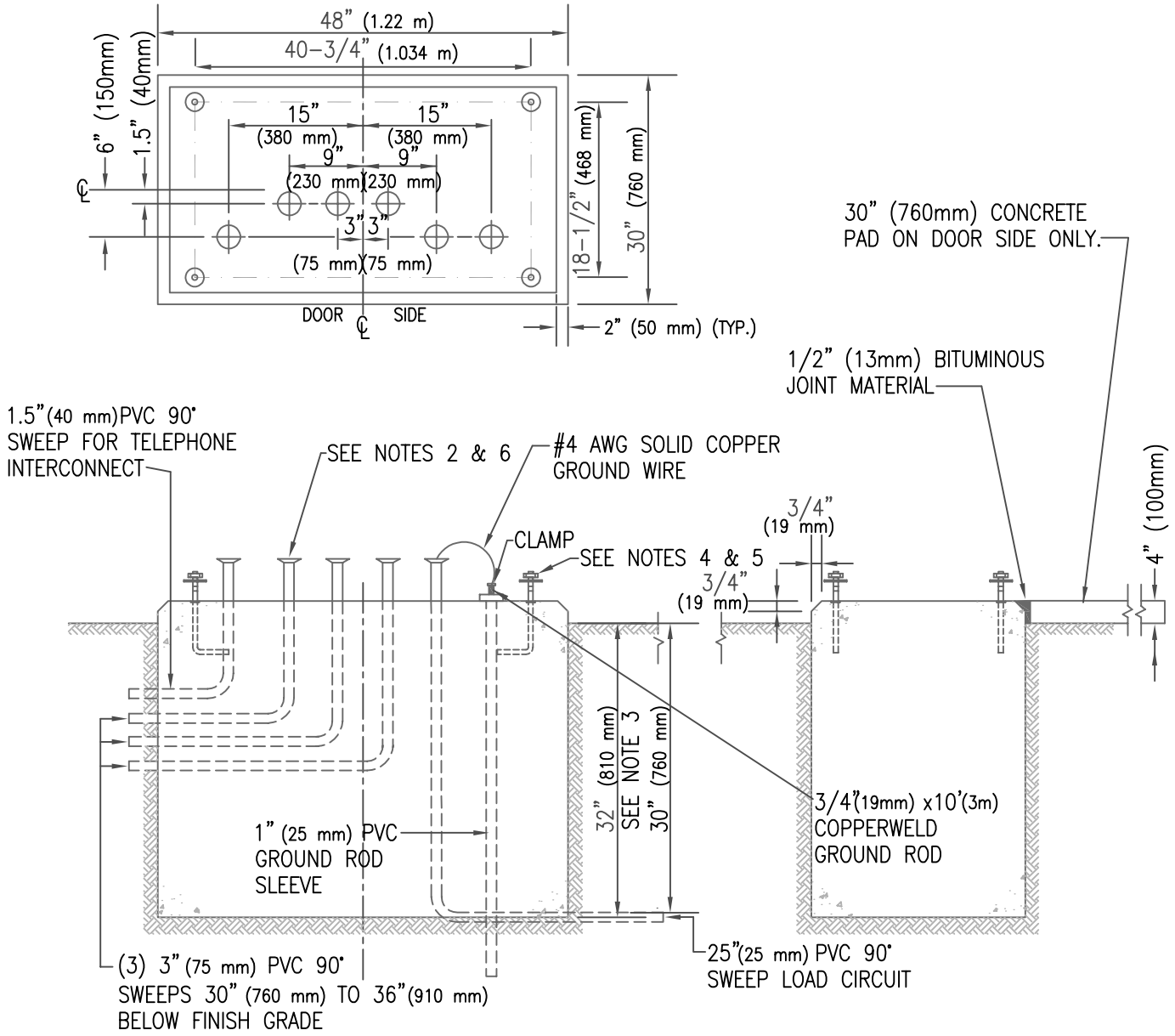

ISSUED:		STANDARD DETAIL		DETAIL NO.
8/92	CITY OF TUCSON FOUNDED 1775	CONTROL CABINET FOUNDATION (TYPE IV, V)	THE SEAL of PIMA COUNTY ARIZONA	T 203
REVISED: 10/02				SHEET 1 OF 2

TS2-3.DWG 12/07/00 10:24

NOTES:

1. ALL MATERIALS AND CONSTRUCTION SHALL CONFORM TO THE REQUIREMENTS OF THE SPECIFICATIONS.
2. SEE PLANS FOR CONDUIT SIZE AND QUANTITY.
3. DEPTH DIMENSION SHOWN IS MINIMUM IN FIRM, UNDISTURBED SOIL. UNSTABLE SOIL CONDITIONS MAY REQUIRE DEEPER FOUNDATIONS.
4. ANCHOR BOLTS SHALL BE GALVANIZED STEEL, 3/4" X 18" X 3" (19 mm X 457 mm X 76 mm), COMPLETE WITH NUTS AND WASHERS.
5. ANCHOR BOLTS SHALL PROJECT A MINIMUM OF 3-1/2" (89 mm) AND A MAXIMUM OF 4-1/2" (115 mm) ABOVE FOUNDATION.
6. CONDUIT SHALL PROJECT A MINIMUM OF 2" (51 mm) AND A MAXIMUM OF 4" (102 mm) ABOVE THE FOUNDATION, EXCEPT FOR CONDUIT FOR GROUND ROD, WHICH SHALL BE FLUSH WITH SURFACE.
7. SEAL GAP BETWEEN CABINET AND FOUNDATION WITH CAULKING COMPOUND
8. ALL CABINET FOUNDATIONS SHALL HAVE A 3/4" X 10' (19 mm X 3.05 m) BONDED COPPER GROUND ROD.
9. DOOR TO FACE AWAY FROM STREET (WHERE POSSIBLE).
10. CONCRETE SLAB SHALL BE PROVIDED.

ISSUED:		STANDARD DETAIL		DETAIL NO.
8/92		CONTROL CABINET FOUNDATION (TYPE IV, V)		T 203
REVISED:				
11/04				SHEET 2 OF 2

TS2-3.DWG 12/07/00 10:24

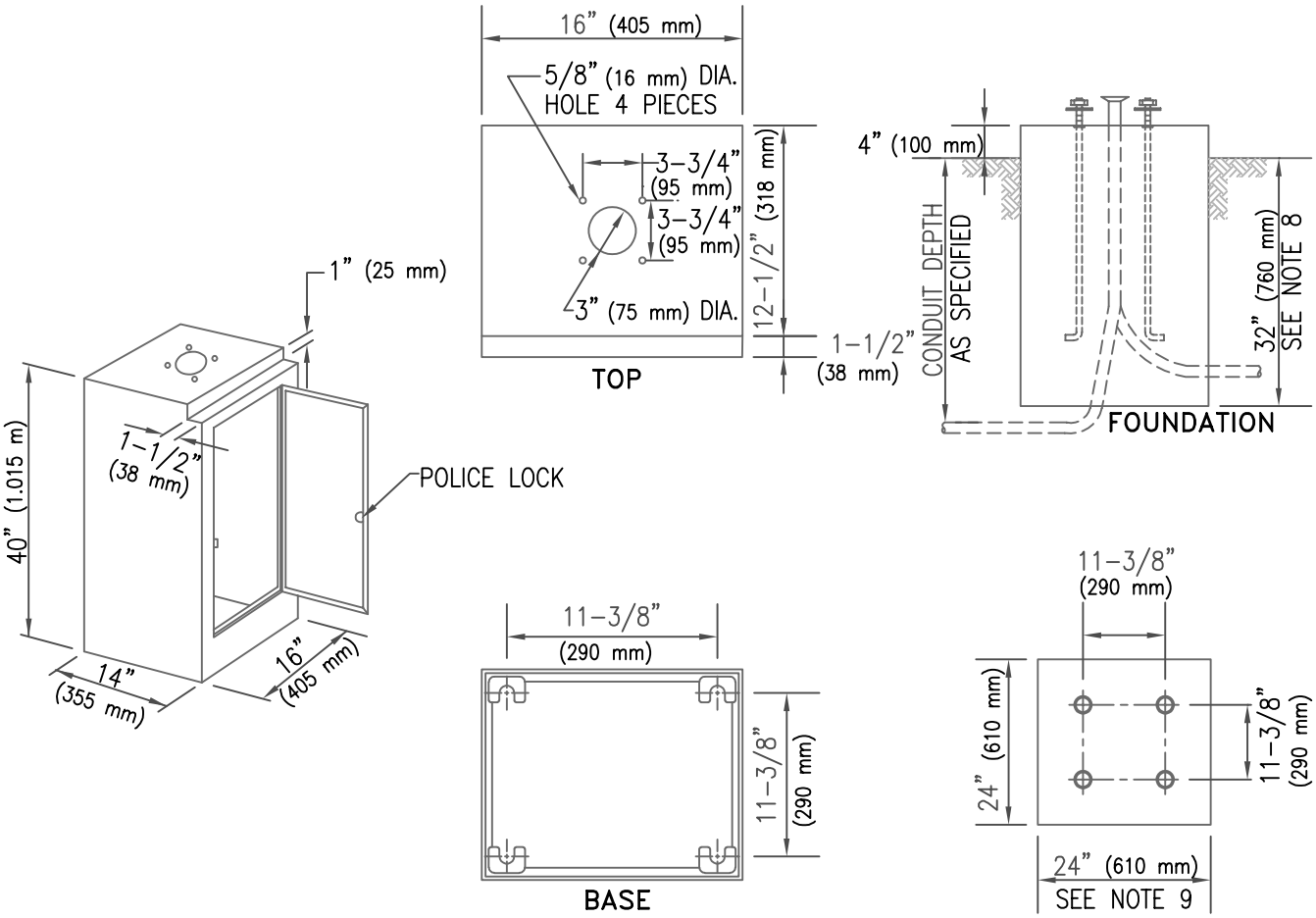

NOTES:

1. SEE SPECIFICATIONS FOR CONSTRUCTION REQUIREMENTS
2. FOR CABINET LOCK DETAILS, SEE T 310.
3. THE MATERIALS SHALL BE CAST ALUMINUM OF 10 GAUGE STEEL.
4. THE DOOR SHALL BE RAIN TIGHT AND DUST PROOF.
5. ANCHOR BOLTS SHALL BE 3/4" X 18" X 3" (19 mm X 455 mm X 75 mm) GALVANIZED STEEL, WITH 2 NUTS, 2 WASHERS, AND SHALL BE FURNISHED WITH CABINET.
6. ANCHOR BOLT PROJECTION ABOVE FOUNDATION SHALL BE 1-3/4" (44 mm) MINIMUM AND 2-1/4" (57 mm) MAXIMUM.
7. CONDUIT PROJECTION ABOVE FOUNDATION SHALL BE 2" (50 mm) MINIMUM AND 4" (100 mm) MAXIMUM. SEE THE PLANS FOR SIZE OF CONDUIT.
8. ADDITIONAL FOUNDATION DEPTH MAY BE NECESSARY TO COMPLY WITH SOIL CONDITIONS.
9. ALTERNATE FOUNDATIONS MAY BE ROUND AND SHALL BE 30" (760 mm) IN DIAMETER.
10. GROUND ROD SHALL BE 3/4" X 10" (19 mm X 3.05 m) BONDED COPPER.
11. DOOR TO FACE AWAY FROM INTERSECTION (WHERE POSSIBLE).
12. SEAL GAP BETWEEN CABINET AND FOUNDATION WITH CAULKING COMPOUND.

ISSUED:		STANDARD DETAIL		DETAIL NO.
8/92	CITY OF TUCSON FOUNDED 1775	TYPE I PEDESTAL CABINET AND FOUNDATION	THE SEAL of PIMA COUNTY ARIZONA	T 308
REVISED: 10/02				SHEET 1 OF 1

TS3-8.DWG 12/07/00 10:25

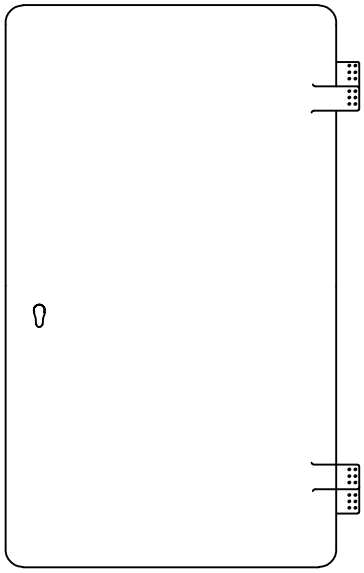

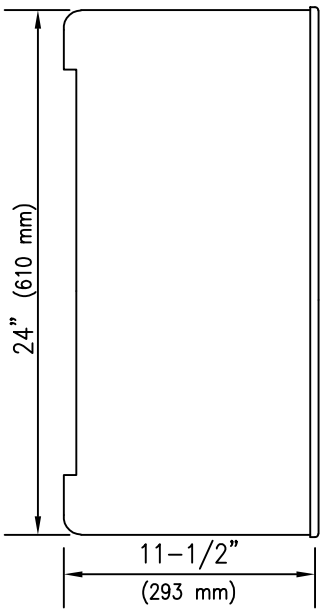

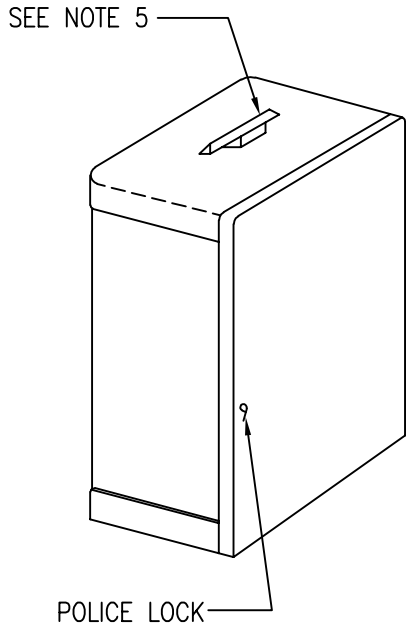

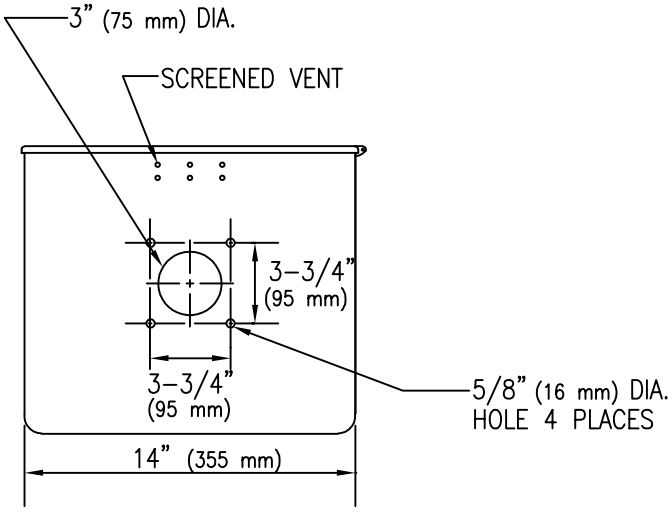

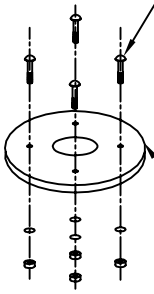

NOTES:

1. FOR CABINET LOCK DETAILS, SEE T 310.
2. MATERIAL; CAST ALUMINUM OR 14 GA. STEEL.
3. THE DOOR SHALL BE RAIN TIGHT AND DUST PROOF.
4. LOCATION OF BASE MOUNTING HOLES SHALL CORRESPOND WITH TYPE 1 PEDESTAL CABINET, SEE T 308.
5. OPTIONAL TEE VENT OR CABINET FAN.
6. FOR CONSTRUCTION REQUIREMENTS REFER TO STD. SPECS.
7. FOR PAINTING REFER TO STD. SPECS.

ISSUED:		STANDARD DETAIL		DETAIL NO.
8/92		TYPE I CONTROL CABINET		T 309
REVISED:				
10/02				SHEET 1 OF 2

TS3-9-1.DWG 12/07/00 10:25

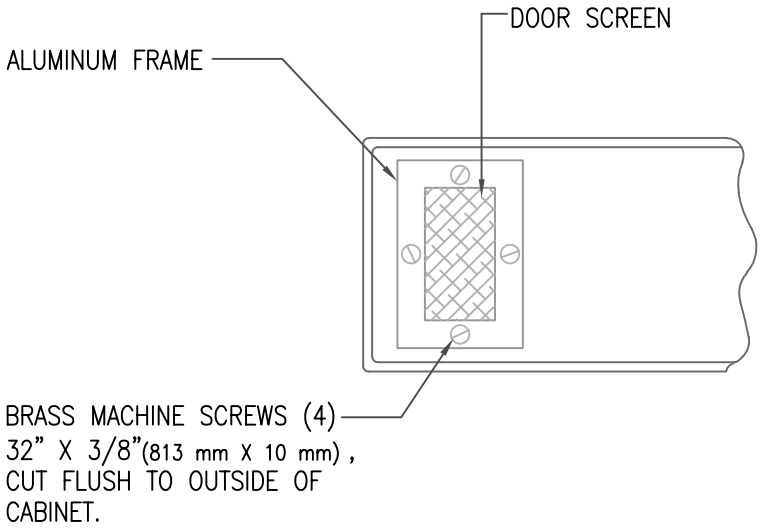

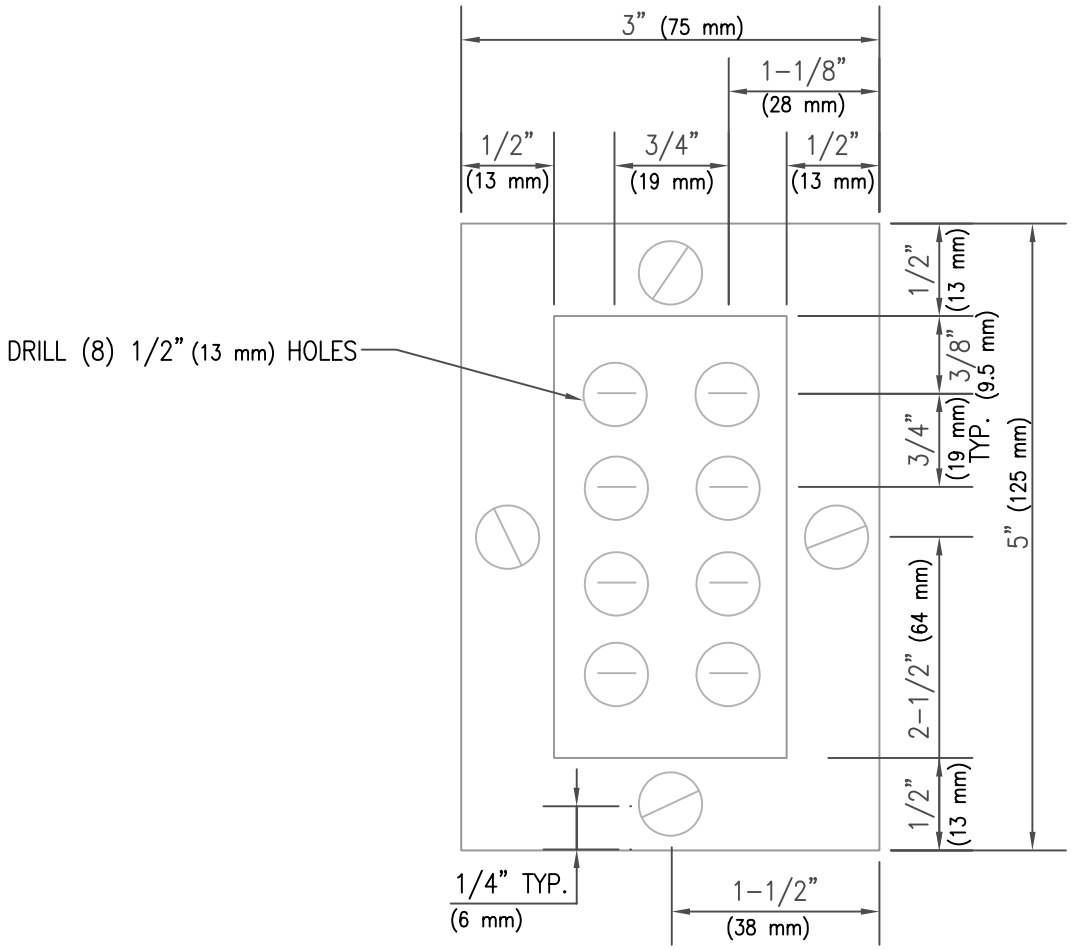

VENT DETAILS

ISSUED:		STANDARD DETAIL		DETAIL NO.
8/92		TYPE I CONTROL CABINET		T 309
REVISED:				
10/02				SHEET 2 OF 2

TS3-9-2.DWG 12/07/00 10:26

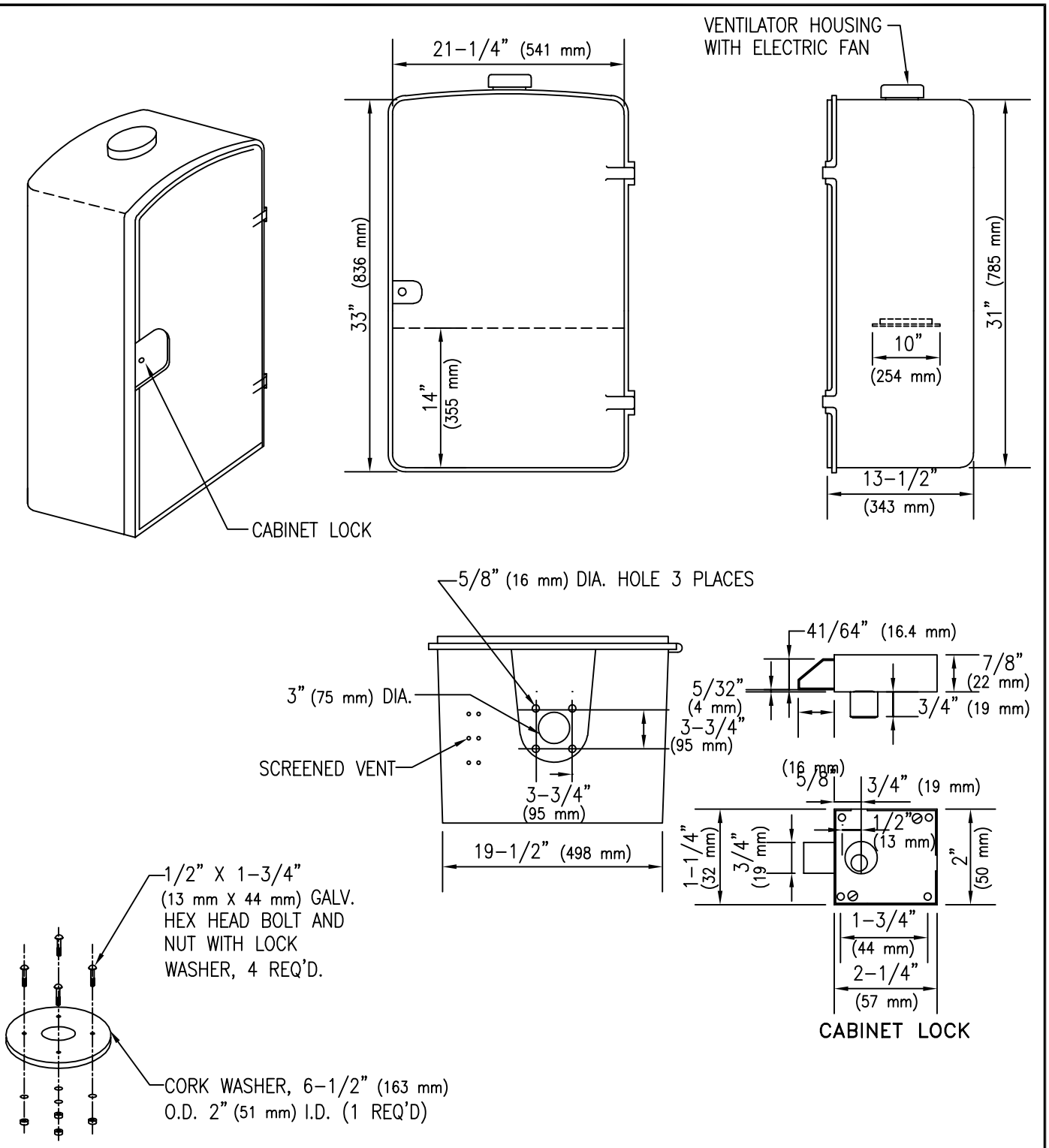

NOTES:

1. MATERIAL; CAST ALUMINUM OR 14 GA. STEEL.
2. DOORS SHALL BE RAIN TIGHT AND DUST PROOF.
3. LOCATION OF BASE MOUNTING HOLES SHALL CORRESPOND WITH SQUARE BASE PEDESTAL CABINET. SEE T 308.
4. FOR CONSTRUCTION REQUIREMENTS REFER TO STD. SPECS.
5. SEE T 309 FOR DETAILS OF SCREENED VENT.

ISSUED:		STANDARD DETAIL		DETAIL NO.
8/92	CITY OF TUCSON	TYPE III CONTROL CABINET	THE SEAL of PIMA COUNTY ARIZONA	T 310
REVISED:				
10/02				SHEET 1 OF 1

TS3-10.DWG 12/07/00 10:27

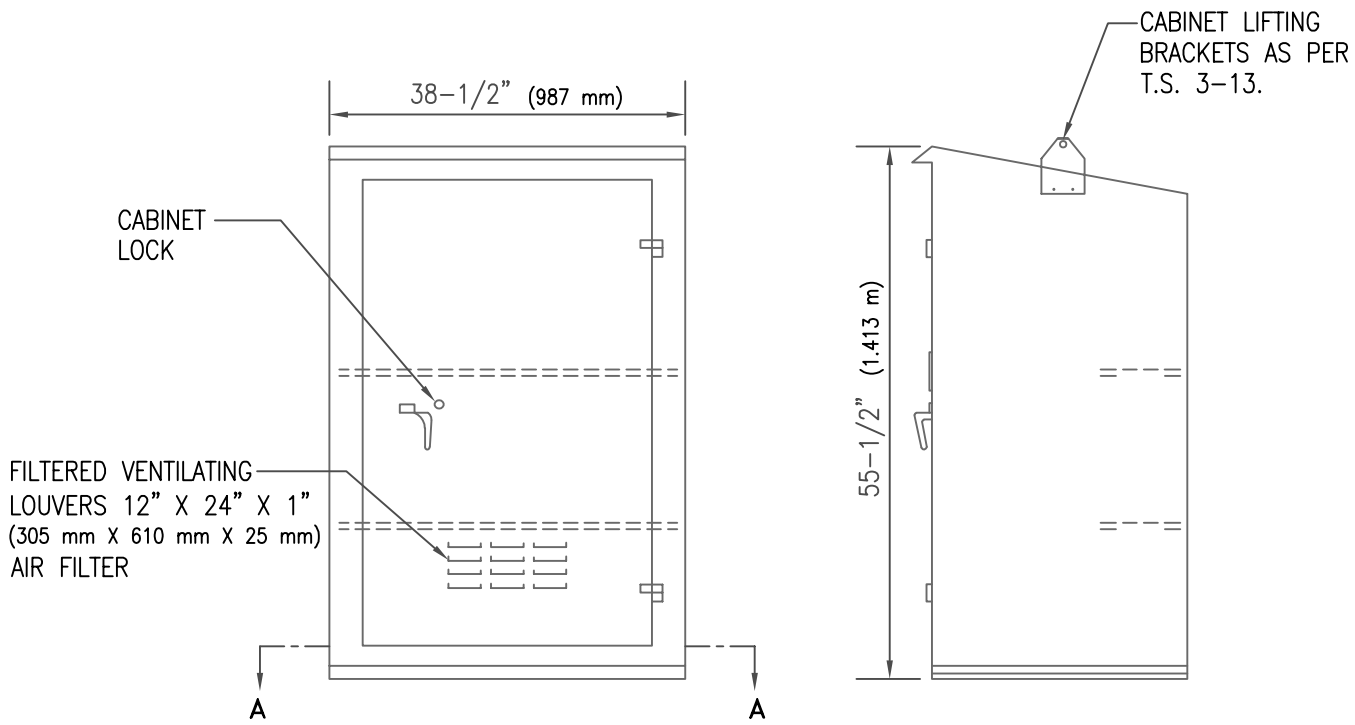

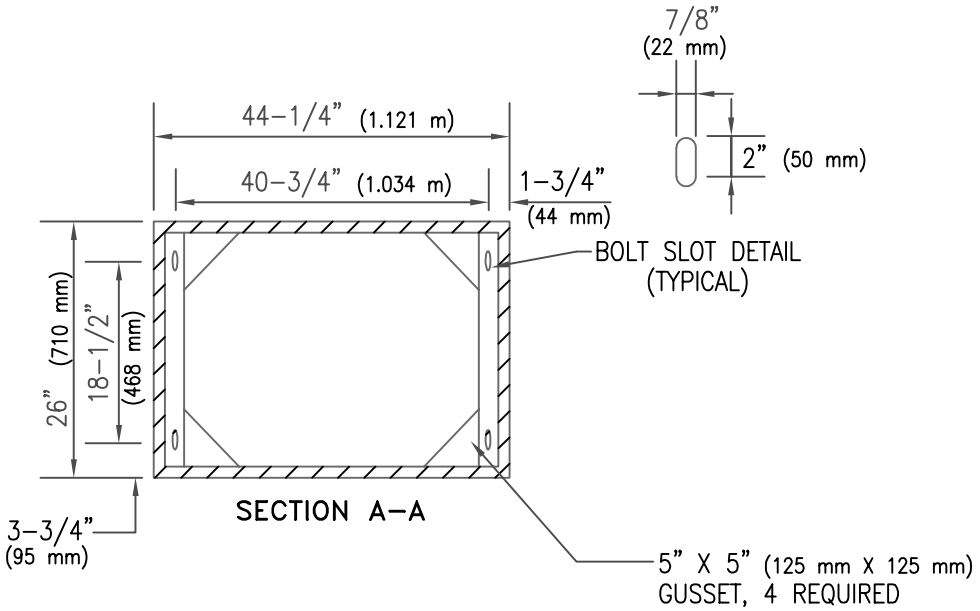

NOTES:

1. FOR CABINET LOCK DETAILS, SEE T 310
2. MATERIAL; 14 GA. STEEL.
3. ALL DOORS SHALL BE RAIN TIGHT AND DUST PROOF.
4. FOR SIZE AND LOCATION OF ANCHOR BOLTS, SEE FOUNDATION DETAIL T 203.
5. SHELVES SHALL BE REMOVABLE AND ADJUSTABLE FOR VERTICAL SPACING. SHELVES SHALL BE FABRICATED FROM SHEET METAL.
6. FOR CONSTRUCTION REQUIREMENTS, SEE SPECIFICATIONS.

ISSUED:		STANDARD DETAIL		DETAIL NO.
8/92	CITY OF TUCSON FOUNDED 1775	TYPE IV CONTROL CABINET	THE SEAL of PIMA COUNTY ARIZONA	T 312
REVISED: 10/02				SHEET 1 OF 2

TS3-12-1.DWG 12/07/00 10:29

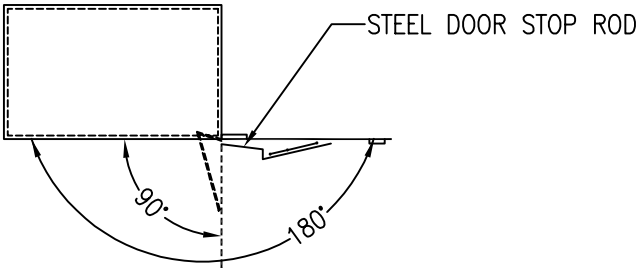

PLAN VIEW SHOWING
2 POSITION DOOR STOP

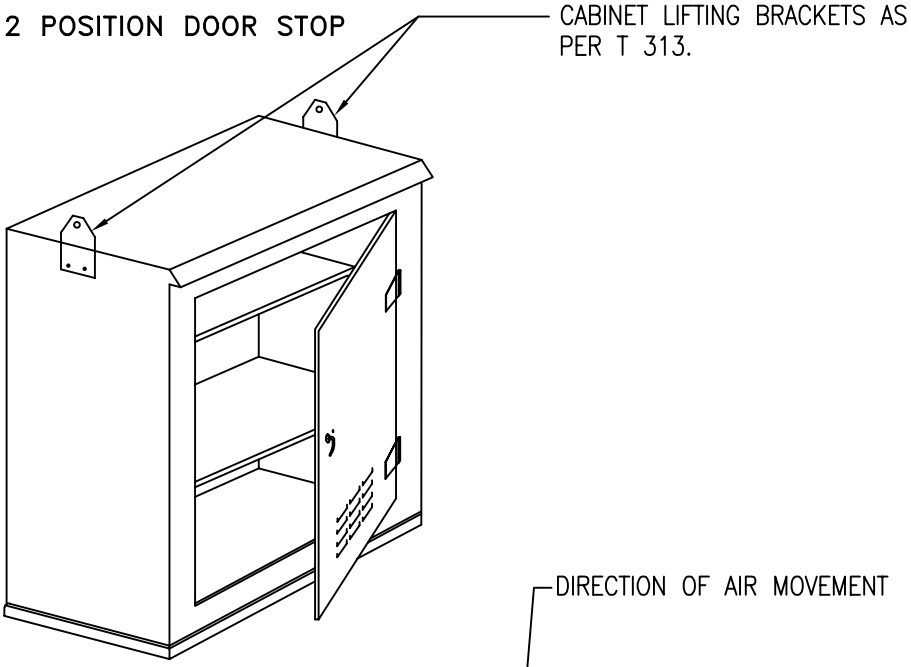

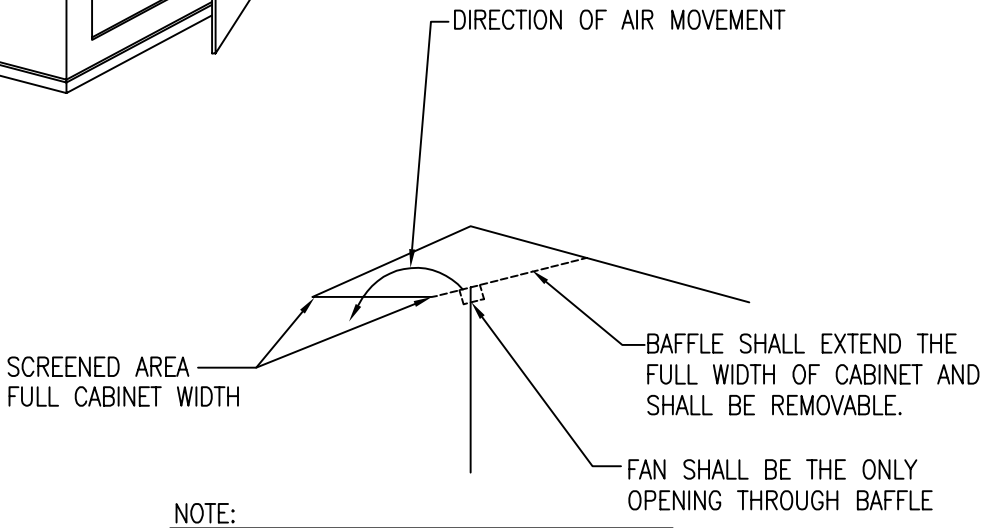

NOTE:
ALL EXHAUST VENTS SHALL HAVE SCREENS

VENTILATION DETAIL

ISSUED:		STANDARD DETAIL		DETAIL NO.
8/92		TYPE IV CONTROL CABINET		T 312
REVISED:				
10/02				SHEET 2 OF 2

TS3-12-2.DWG 12/07/00 10:29

CHANNEL LOCATIONS ON CABINET

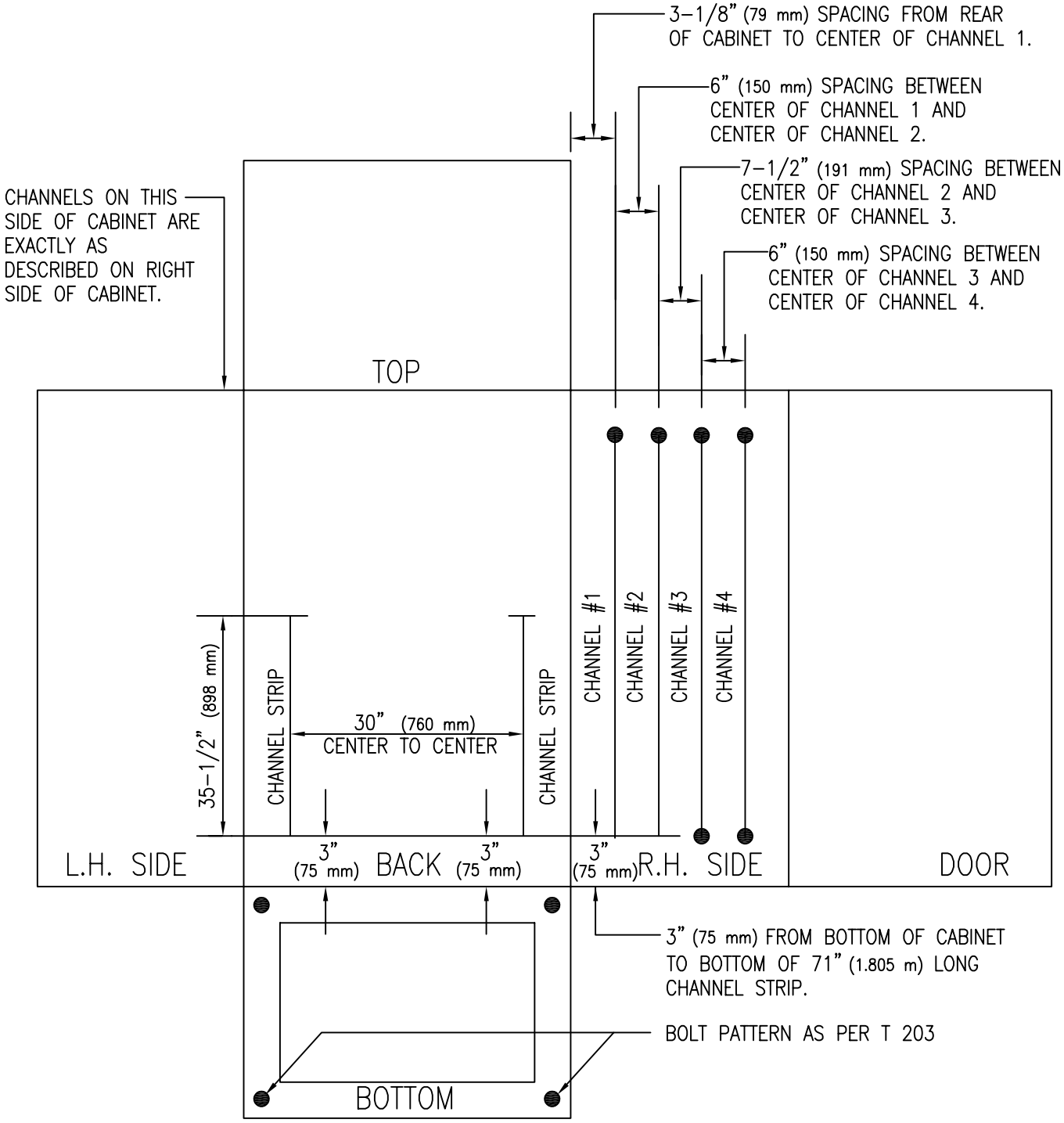

ISSUED:		STANDARD DETAIL		DETAIL NO.
8/92		TYPE V CONTROL CABINET		T 313
REVISED:				
10/02				SHEET 1 OF 7

TS3-13-1.DWG 12/07/00 10:34

SHELF AND MOUNTING HARDWARE

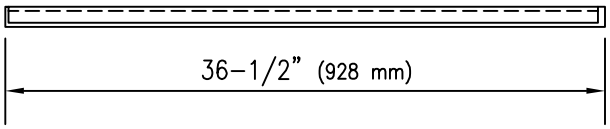

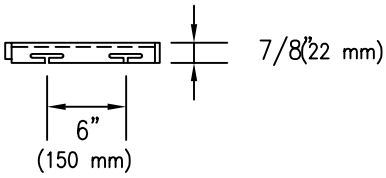

SHELF MOUNTING HARDWARE

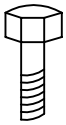

1/4 20 BOLT

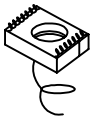

1/4 20 SPRING NUT

ISSUED:		STANDARD DETAIL		DETAIL NO.
8/92		TYPE V CONTROL CABINET		T 313
REVISED:				
10/02				SHEET 2 OF 7

TS3-13-2.DWG 12/07/00 10:35

SIDE CHANNEL DETAIL

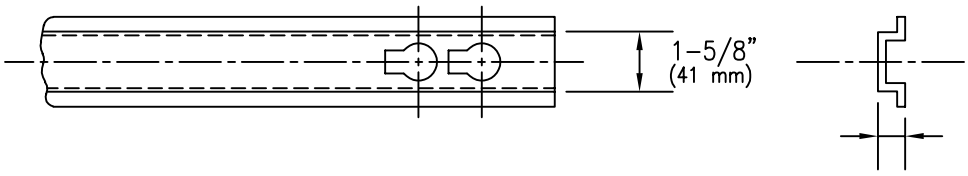

SHELF MOUNTING CHANNELS

KEYHOLES RUN FOR FULL LENGTH OF 71" (1.805 m) CHANNEL THAT IS MOUNTED TO SIDE OF CABINET 3" (75 mm) FROM BOTTOM OF CABINET.

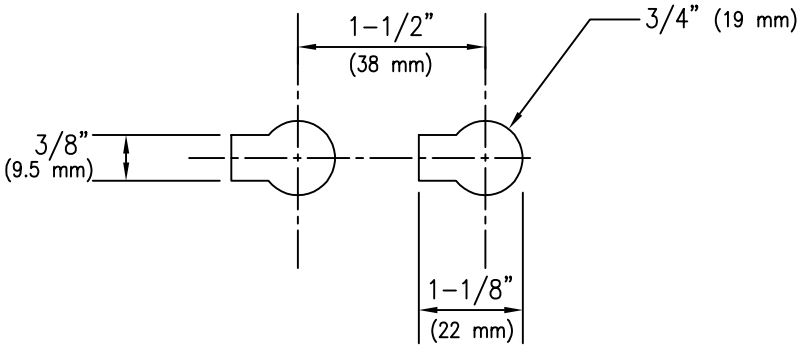

ISSUED:		STANDARD DETAIL		DETAIL NO.
8/92		TYPE V CONTROL CABINET		T 313
REVISED:				
10/02				SHEET 3 OF 7

TS3-13-3.DWG 12/07/00 10:35

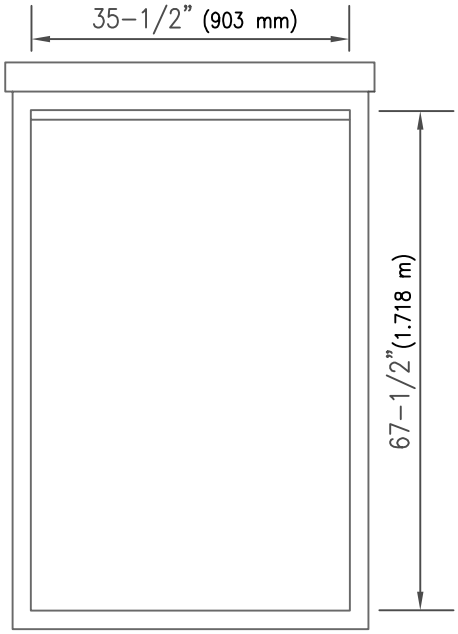

DOOR OPENING

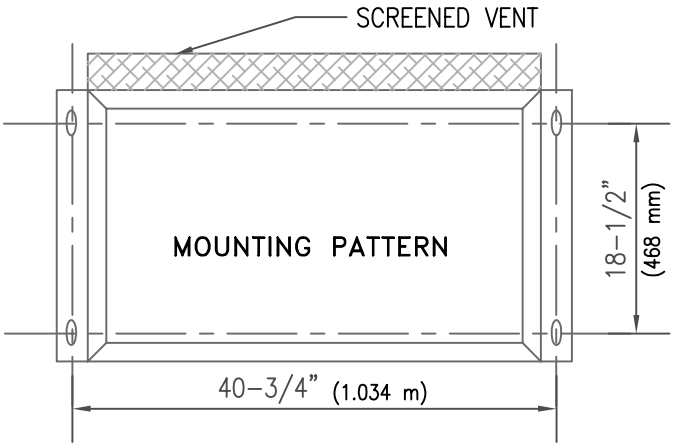

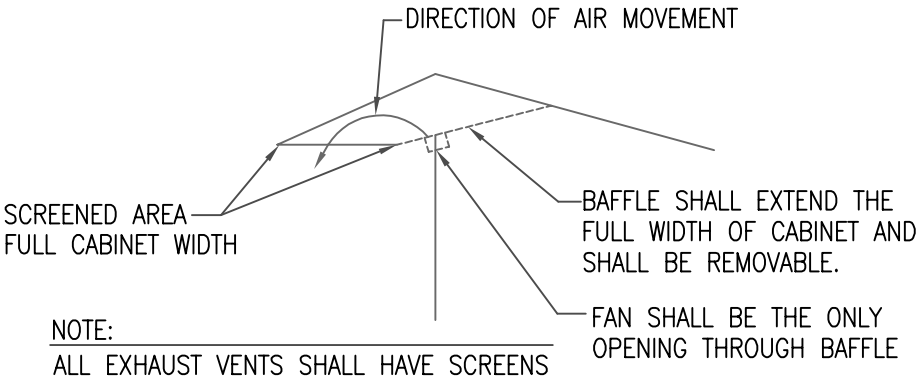

NOTE:
ALL EXHAUST VENTS SHALL HAVE SCREENS

VENTILATION DETAIL

CONSTRUCTION: ENCLOSURE AND DOORS

A. ENCLOSURES

1. MADE FROM 14 GAUGE COLD ROLLED STEEL TO PROVIDE A STRONG AND RIGID CONSTRUCTION.
2. VERTICAL MOUNTING CHANNELS ARE WELDED TO INTERIOR ENCLOSURE WALLS TO PROVIDE ADJUSTABLE SHELF AND PANEL LOCATIONS. MOUNTING HARDWARE INCLUDED.
3. DOOR OPENING HAS A ROLLED UP LIP AT TOP AND FLANGED LIPS ON THREE SIDES WHICH INCREASE STRENGTH AROUND OPENING AND KEEP DUST AND LIQUIDS FROM DROPPING INTO ENCLOSURES WHEN DOOR IS OPENED.
4. ENCLOSURE HAS PROVISIONS FOR MOUNTING FORCED AIR FAN SYSTEM AND HAS A SCREENED AIR EXHAUST OPENING UNDER ROOF OVERHANG.
5. ALL EXTERIOR SEAMS ARE EITHER CONTINUOUSLY WELDED OR SEALED WITH G.E. SILICONE SEALANT.
6. ALL EXTERNAL HARDWARE IS STAINLESS STEEL. ALL INTERNAL HARDWARE IS EITHER STAINLESS STEEL, OR CADMIUM PLATED STEEL, TYPE II, CLASS I.

B. DOORS

1. EQUIPPED WITH THREE POINT LATCHING MECHANISM WITH NYLON ROLLERS AT TOP AND BOTTOM.
2. DOOR HANDLE IS 3/4" (19 mm) DIAMETER STAINLESS STEEL, AND HAS PROVISIONS FOR PADLOCKING.
3. MAIN DOOR LOCK IS CORBIN #1548–1 OR EQUAL.
4. A LOUVERED AIR VENT IS PROVIDED AND HAS FILTER RETAINER BRACKETS.
5. MAIN DOOR IS SEALED WITH CLOSED CELL NEOPRENE GASKET.
6. MAIN DOOR HAS THREE HEAVY GAUGE STAINLESS STEEL HINGES WITH 1/2" (6 mm) DIAMETER STAINLESS STEEL HINGE PINS WELDED IN PLACE. HINGES ARE SECURED WITH 1/2–20 STAINLESS STEEL CARRIAGE BOLTS AND LOCK NUTS.

FINISH:
PAINTED ENCLOSURES ARE TREATED WITH THREE (3) STAGE IRON PHOSPHATE COATING AND FORCE AIR DRIED. STANDARD FINISH COAT IS A ZINC CHROMATE PRIMER FOLLOWED BY A BAKE ALKALI ENAMEL.

ISSUED:		STANDARD DETAIL		DETAIL NO.
8/92	CITY OF TUCSON FOUNDED 1775	TYPE V CONTROL CABINET	THE SEAL of PIMA COUNTY ARIZONA	T 313
REVISED: 10/02				SHEET 4 OF 7

TS3–13–4.DWG 12/07/00 10:36

TYPE V CABINET

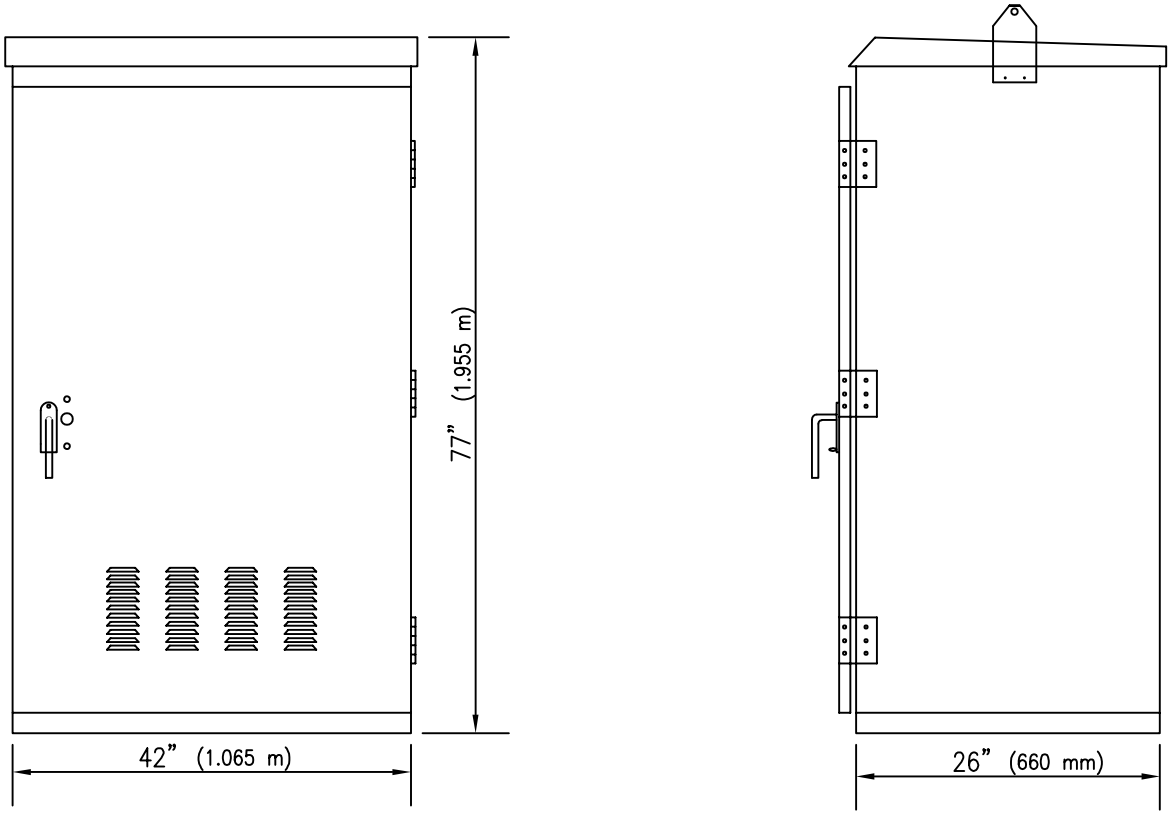

ISSUED:		STANDARD DETAIL		DETAIL NO.
8/92		TYPE V CONTROL CABINET		T 313
REVISED:				
10/02				SHEET 5 OF 7

TS3-13-5.DWG 12/07/00 10:37

CABINET LIFTING BRACKET
2 EA. PER CABINET

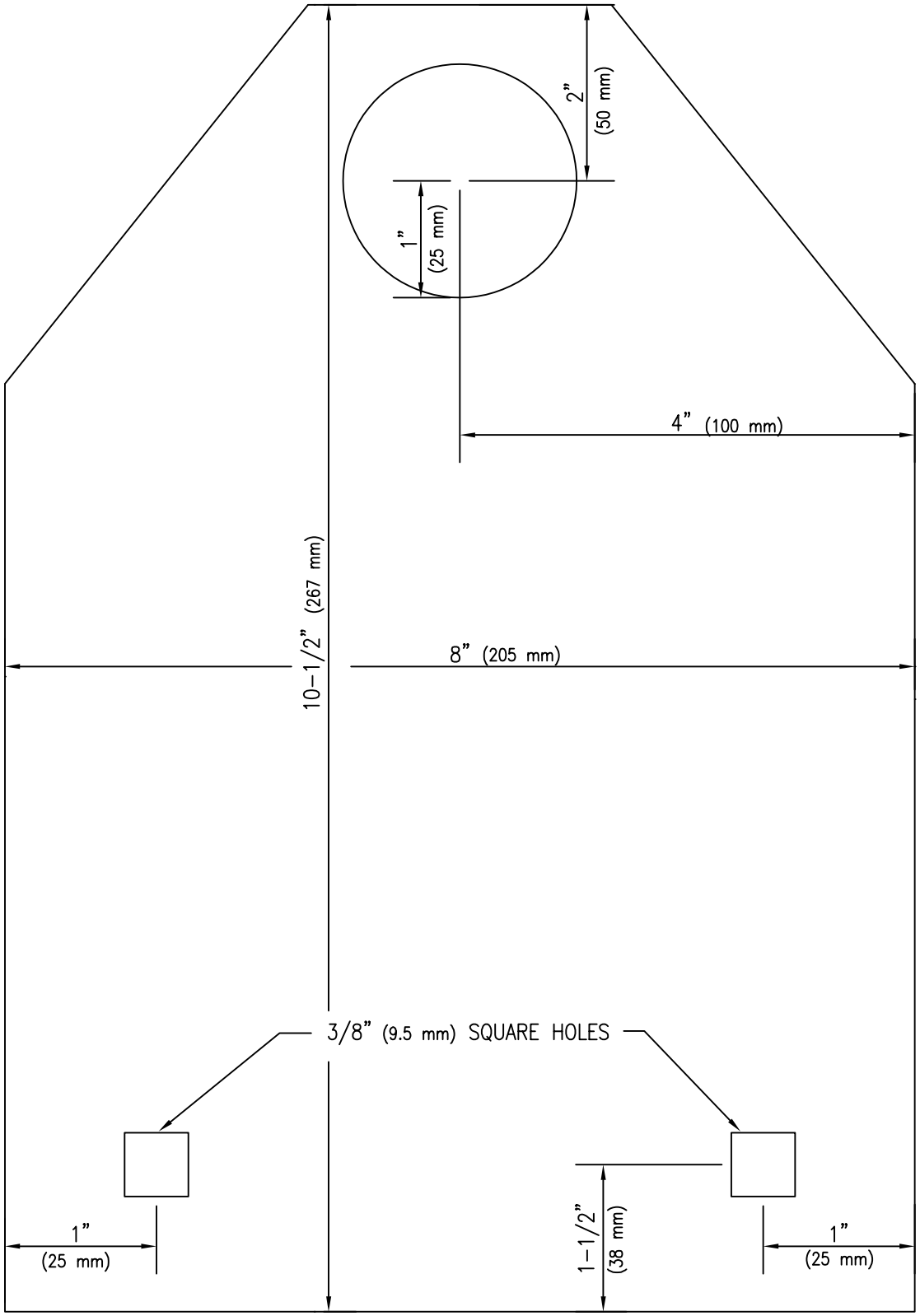

ISSUED:		STANDARD DETAIL		DETAIL NO.
8/92		TYPE V CONTROL CABINET		T 313
REVISED:				
10/02				SHEET 6 OF 7

TS3-13-6.DWG 12/07/00 10:38

TYPE V CABINET

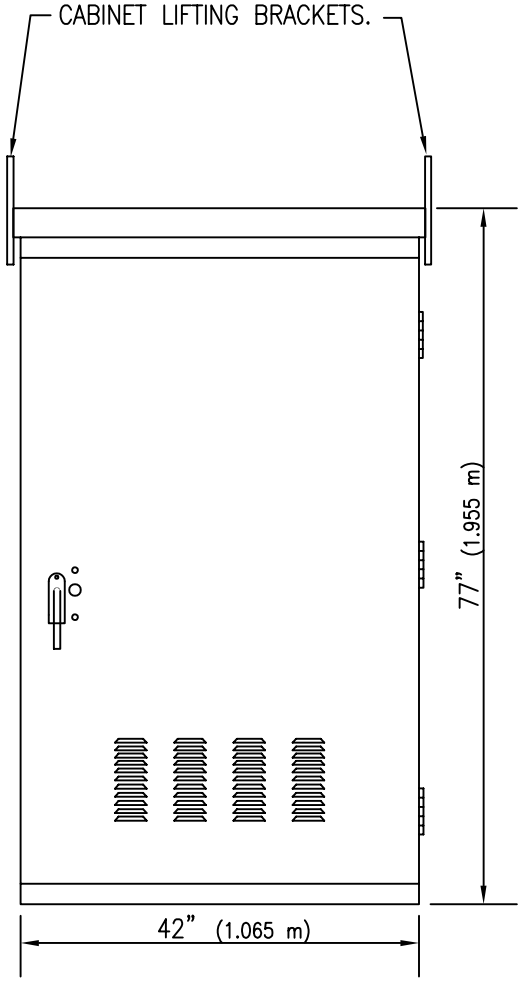

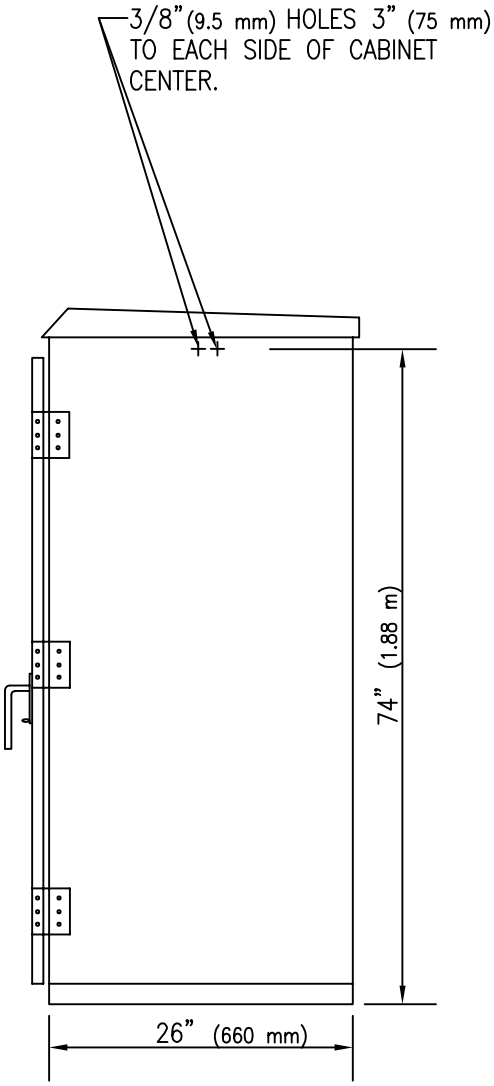

3/8" (9.5 mm) HOLES ARE LOCATED 74" (1.88 m) HIGH AND 3" (75 mm) TO EACH SIDE OF THE CABINET SIDE PANEL CENTER (13" (330 mm)). 2 HOLES ON EACH SIDE OF CABINET BRACKETS ARE SECURED WITH 3/8" x 1" (9.5 mm X 25 mm) CARRIAGE BOLTS.

ISSUED:		STANDARD DETAIL		DETAIL NO.
8/92	CITY OF TUCSON FOUNDED 1775	TYPE V CONTROL CABINET	THE SEAL of PIMA COUNTY ARIZONA	T 313
REVISED: 10/02				SHEET 7 OF 7

TS3-13-7.DWG 12/07/00 10:39

AVERAGE MAINTAINED HORIZONTAL ILLUMINATION: (FOOTCANDLES)

	COMMERCIAL	URBAN INTERMEDIATE	RESIDENTAL
MAJOR	2.0	2.0	2.0
COLLECTOR	1.2	0.9	0.6
LOCAL	0.9	0.6	0.4
ALLEYS	0.6	0.4	0.4

AVERAGE–TO–MINIMUM UNIFORMITY RATIOS:

COMMERCIAL AREAS	3:1
INTERMEDIATE AREAS	3:1
RESIDENTIAL AREAS	6:1

SPACING EQUATION:

$$S = \frac{(C.U.)\ (I.L.)\ (L.L.D.)\ (L.L.D.)}{(E_h)\ (W)}$$

C.U. = COEFFICEINT OF UTILIZATION
I.L. = INITIAL LAMP LUMENS
L.L.D. = LAMP LUMEN DEPRECIATION
L.D.D. = LAMP DIRT DEPRECIATIONS
E_h = AVERAGE MAINTAINED HORIZONTAL ILLUMINATION
W = WIDTH OF ROADWAY

% OF VOLTAGE DEVIATION CRITERIA FOR STREET LIGHTING CIRCUITS.

THE LOWEST VOLTAGE DEVIATION FROM NOMINAL AT THE LAST LUMINAIRE IN THE CIRCUIT SHALL BE AS CLOSE AS POSSIBLE BUT NOT OVER 7.20%, INCLUDING VOLTAGE DROP AND ±5% MAXIMUM UTILITY ALLOWABLE DEVIATION.

EQUATIONS TO CALCULATE % VOLTAGE DEVIATION FOR 480 VOLTS, 10, 3 WIRE CIRCUITS ONLY. *

$$\% \text{ DEVIATION} = \frac{\text{VOLTAGE DROP IN VOLTS} + 10}{480} \times 100$$

FOR OTHER VOLTAGES, DESIGNER SHALL FIND OUT THE VOLTAGE AT UTILITY TRANSFORMER TERMINALS WITH FULL LOAD CONNECTED, DEDUCT FROM THIS VALUE THE VOLTAGE DROP FROM XFMER TO CABINET AND MULTIPLY THE RESULT BY 0.95. THE RESULTING VALUE (VC) SHALL BE USED IN THE FOLLOWING EQUATION.

$$\% \text{ DEVIATION} = \frac{\text{NOMINAL VOLTAGE} - (\text{VC} - \text{VOLTAGE DROP})}{\text{NOMINAL VOLTAGE}} \times 100$$

THE NO LOAD VOLTAGE AT TRANSFORMER TERMINALS IS NOT NECESSARILY THE NOMINAL VOLTAGE. A DIRECT SURVEY OF OUR STREET LIGHTING SERVICES INDICATED THAT TUCSON ELECTRIC POWER MAINTAINS A HIGHER VOLTAGE AT THEIR TRANSFORMER TERMINALS.

NOTE: VOLTAGE DROP SHALL BE BETWEEN 3% AND 5%. UNLESS OTHERWISE NOTED, FIXTURES SHALL NOT HAVE PHOTOCELL RECEPTACLE.

*PREDICATED UPON THE FACT THAT THE UTILITY IS PROVIDING VOLTAGE AT THE LIGHTING CABINET TERMINALS OF 495 VOLTS WITH FULL LOAD CONNECTED.

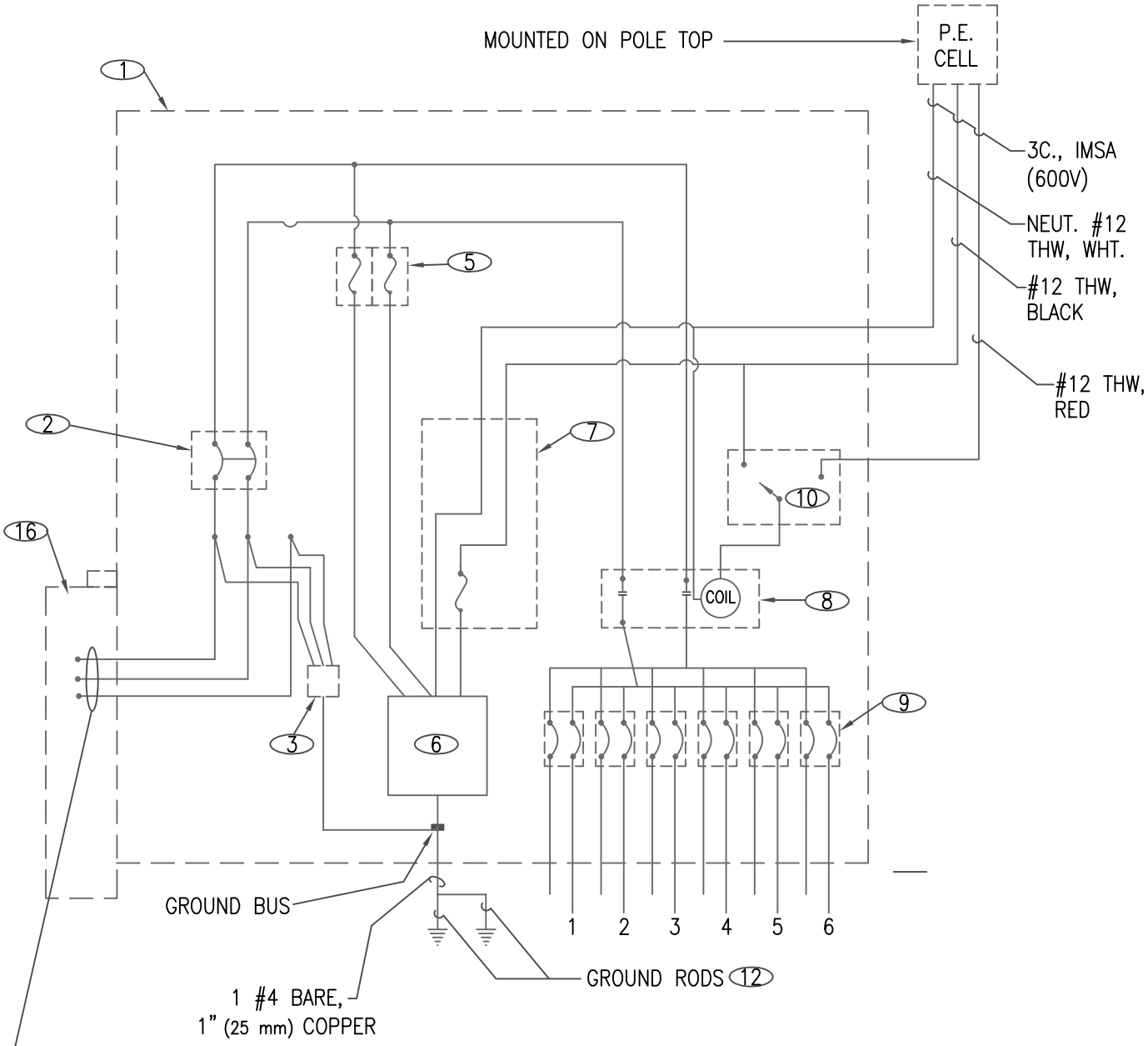

SERVICE 480V, 3W, 1ø, 2 1/2"(64 mm) C TO SERVICE POLE CONDUCTORS BY POWER CO. T.E.P. LANDING LUGS IN SR-425.
IF METERING IS REQUIRED REFER TO T.E.P. SR-414 AND SR-420.

CIRCUITS TO STREETLIGHTS 480 V.
COLOR CODE:
1. RED
2. BLACK
3. BLUE
4. BROWN
5. ORANGE
6. PURPLE

ISSUED:		STANDARD DETAIL		DETAIL NO.
8/92		TYPE I STREET LIGHTING CABINET		T 325
REVISED:				
11/04				SHEET 1 OF 3

TS3-25-1.DWG 12/07/00 10:45

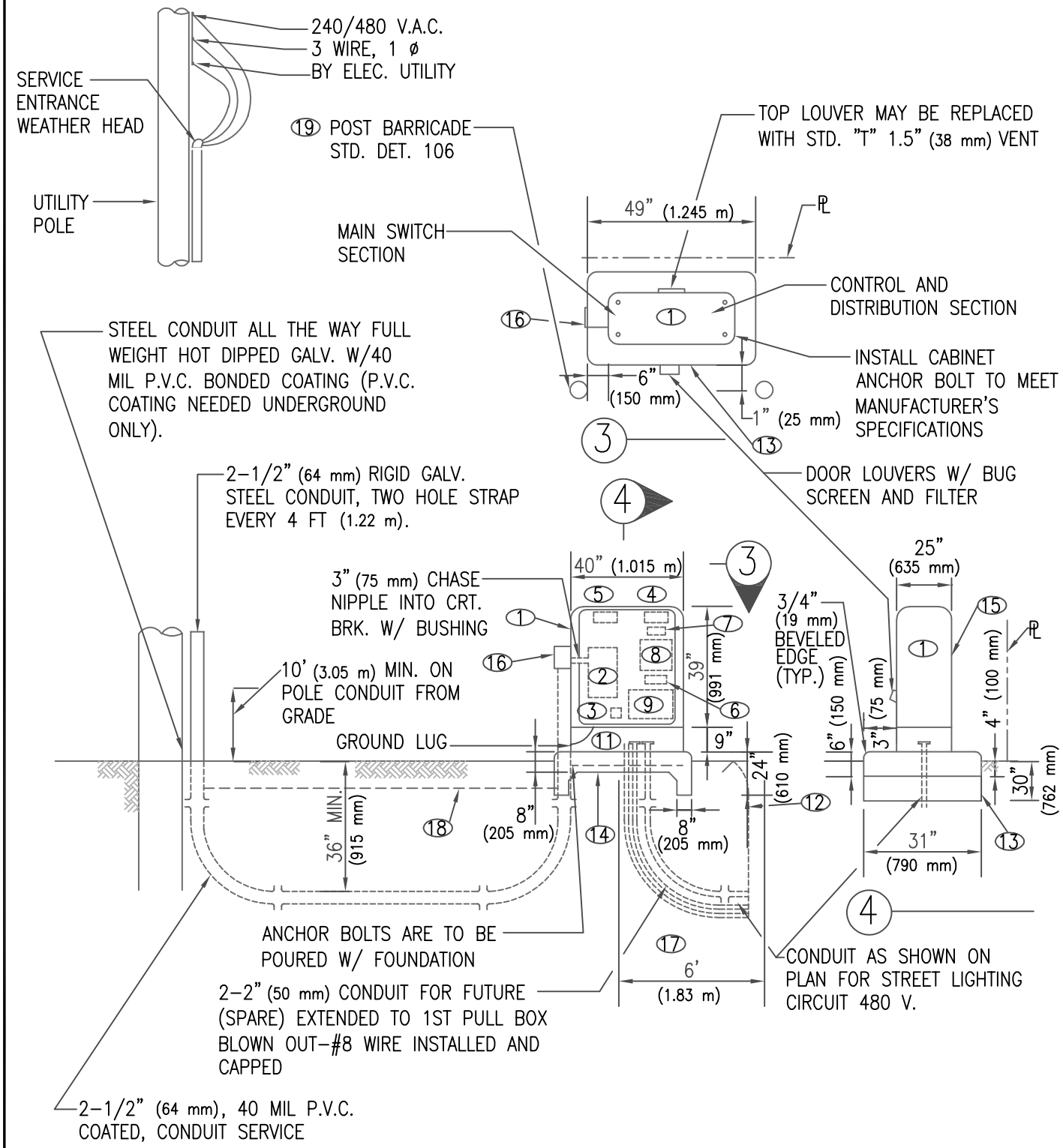

ISSUED:		STANDARD DETAIL		DETAIL NO.
8/92	CITY OF TUCSON FOUNDED 1775	TYPE I STREET LIGHTING CABINET	THE SEAL of PIMA COUNTY ARIZONA	T 325
REVISED: 11/04				SHEET 2 OF 3

TS3-25-2.DWG 12/07/00 10:45

KEYNOTE NO.	MATERIAL LIST
1A.	PAD MOUNTED 1 SECTION N.E.M.A. 3 WEATHERPROOF ENCLOSURE TO BE BOLTED TO A CONCRETE PAD WITH A 9" (230 mm) BASE SECTION PROVIDED AT THE BOTTOM OF THE ENCLOSURE FOR INCOMING AND OUTGOING FEEDERS.
1B.	THE ENCLOSURE IS TO BE CONSTRUCTED OF 10 GA. STEEL WITH REINFORCED ANGLE IRON CORNERS. EACH SECTION SHALL HAVE WELDED PIANO-HINGED DOOR WITH 3 POINT PAD LOCKING LATCH WITH NYLON HINGED ROLLERS. ALL EQUIPMENT TO BE DEAD FRONTED. ON LIVE PARTS EXPOSED. DEAD FRONT SHALL BE HINGED WITH LIFT UP & OUT TYPE HINGE PINS.
1C.	THE ENCLOSURE SHALL BE PAINTED WITH ONE COAT OF HIGH GRADE PRIMER AND 2 COATS OF BROLITE SOLID COAT WHITE ENAMEL, OR EQUAL AND COMPLETED IN A WORKMANSHIP-LIKE FINISH, INSIDE AND OUT.
1D.	A SIGN SHALL BE AFFIXED TO THE DOOR TO READ "DANGER-HIGH VOLTAGE" AS APPROVED BY THE NATIONAL ELECTRIC CODE.
2.	200 AMP 600V BOLT ON TYPE CIRCUIT BREAKER (AIC PER UTILITY CO. AVAILABLE FAULT CURRENT).
3.	SECONDARY TYPE LIGHTING ARRESTOR. 3 W 650 V.A.C. MAX. TO GROUND.
4.	TRANSFORMER CIRCUIT 25A, SLOW BLOW FUSE RATED AT 600 V.
5.	DRY TYPE CONTROL TRANSFORMER 240/480 V.A.C., 1ø PRI TO 120/240 V.A.C., 1ø SEC., 750VA, 60 CYC.
6.	PORCELAIN PLUG TYPE FUSE HOLDER WITH 8 AMP TYPE S FUSE.
7.	N.E.M.A. I TYPE LIGHTING CONTRACTOR, 100 AMP SILVER ALLOY CONTACTS. 29 N.O., 600 V.A.C. WITH 120 V.A.C. CONTROL COIL (AIC PER UTILITY CO. AVAILABLE FAULT CURRENT).
8.	CIRCUIT BREAKER 30 AMP 2P, 600 V.A.C., FRAME BOLT DOWN TYPE, TYPICAL (AIC PER UTILITY CO. AVAILABLE FAULT CURRENT).
9.	HAND-OFF AUTO, TEST SWITCH, 10 AMP, 250 V.A.C.
10.	#4 WIRE, SOLID BARE COPPER IN 1" (25 mm) PVC STUB-OUT.
11.	10' X 3/4" (3 m X 19 mm) COPPER CLAD WELD GROUND ROD WITH CLAMP. TWO REQUIRED SEPARATED BY 6' (1.83 m)
12.	3,000 P.S.I. CONCRETE, CAST IN PLACE.
13.	WIRE MESH 6" X 6" (150 mm X 150 mm) 10/10 WWF CENTERED IN SLAB.
14.	4" (100 mm) REFLECTIVE LETTERS FOR ADDRESS AND IDENTIFICATION.
15.	T.E.P. SR-425 TERMINATION BOX. DOUBLE BARREL LUG ON NEUTRAL. IF METER IS REQUIRED REFER TO T.E.P. SR-420 & SR-414.
16.	PROVIDE 2-2" (50 mm) PVC TO PULL BOX WITH #6 BOND SPRING COILED IN CONDUIT FOR FUTURE.
17.	3" (75 mm) YELLOW OR RED MARKING TAPE "BURIED ELECTRICAL LINE BELOW".
18.	POST BARRICADES PER STANDARD DETAIL 106.

ISSUED:		STANDARD DETAIL		DETAIL NO.
8/92	CITY OF TUCSON FOUNDED 1775	TYPE I STREET LIGHTING CRITERIA	THE SEAL of PIMA COUNTY ARIZONA	T 325
REVISED: 11/04				SHEET 3 OF 3

TS3-25-3.DWG 12/07/00 10:46

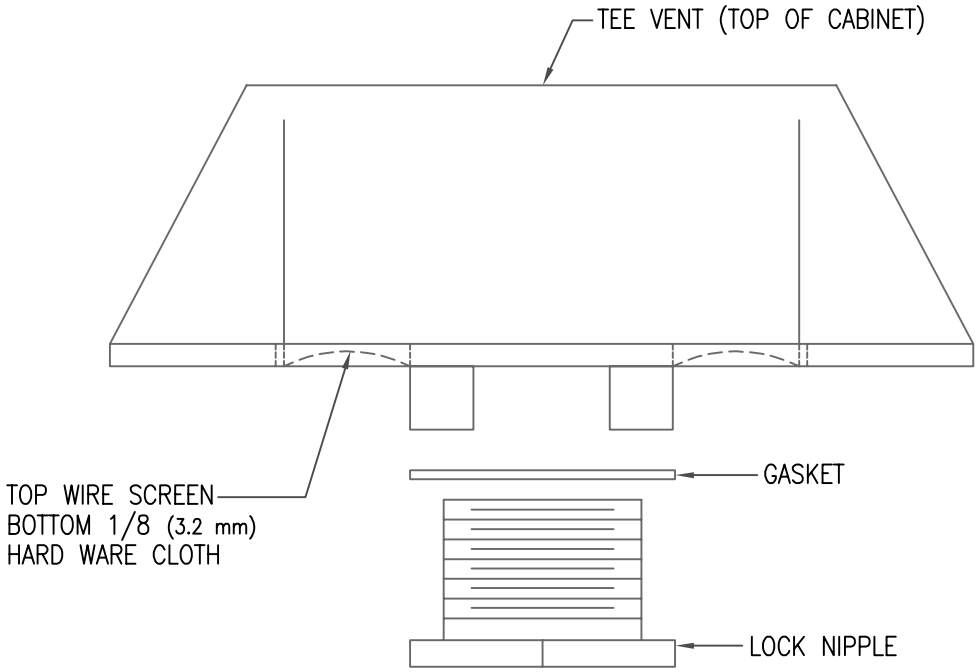

ASSEMBLY SHALL BE PAINTED TO MATCH CABINET

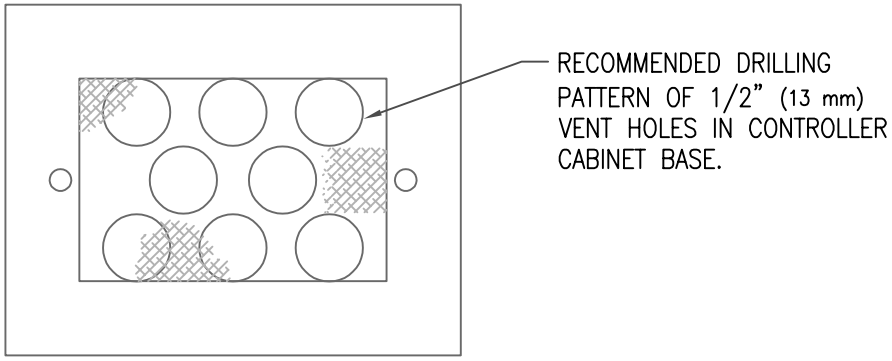

CABINET BASE SCREEN
(COPPER SCREEN)

ISSUED:		STANDARD DETAIL		DETAIL NO.
8/92		TEE VENT (OPTIONAL)		T 327
REVISED:				
10/02				SHEET 1 OF 1

TS3-27.DWG 12/07/00 10:46

GENERAL NOTES

MAST ARMS SHALL HAVE NO DEVIATION LEFT OR RIGHT OF CENTER FROM THE CENTER LINE.

ALL POLES AND MAST ARMS SHALL BE STRAIGHT AND TRUE.

THE CONTRACTOR SHALL REINSTALL EXISTING TRAFFIC SIGNS ON THE NEW POLES AS AN INCIDENTAL PART OF THE POLE INSTALLATION.

ANCHOR BOLTS SHALL BE SET TO THE PROPER GRADE TO ENSURE THAT THE BOLT COVER FITS AND THE GALVANIZED ANCHOR BOLTS ARE NOT DAMAGED.

POLE AND MAST ARM TAPER: 0.14" (4MM) PER FOOT (305MM).

ISSUED:		STANDARD DETAIL		DETAIL NO.
7/89		GENERAL NOTES		T 400
REVISED:				
11/04				SHEET 1 OF 1

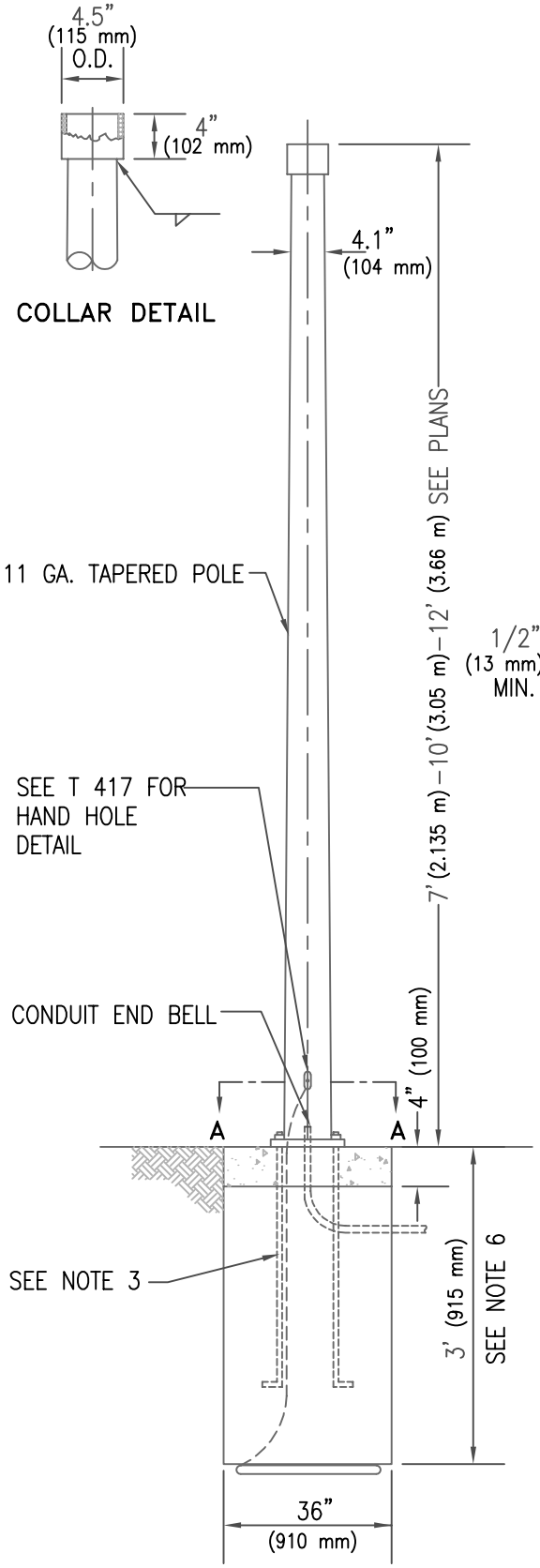

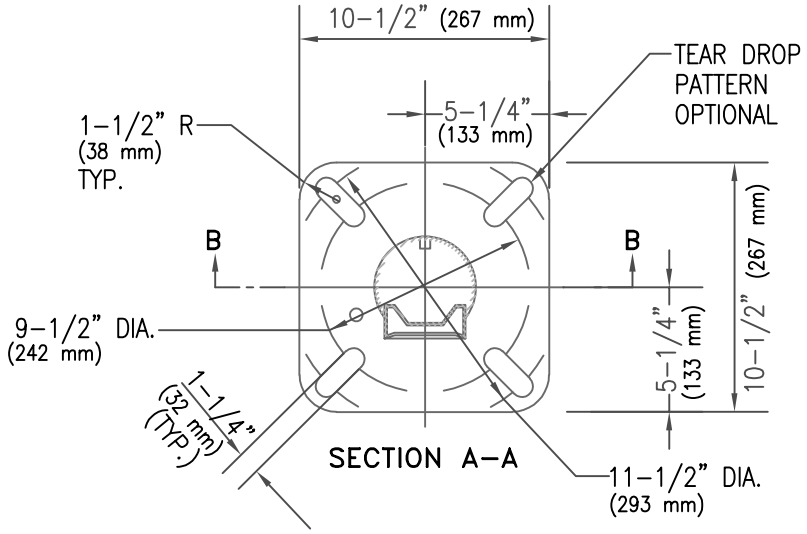

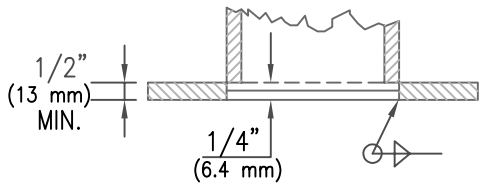

SECTION B–B
BASE PLATE DETAIL

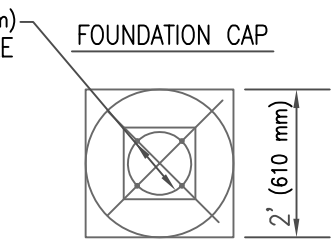

FOUNDATION PLAN

NOTES:

1. ALL MATERIALS AND CONSTRUCTION SHALL CONFORM TO THE REQUIREMENTS OF THE SPECIFICATIONS.
2. THE POLE SHALL BE STEEL WITH HOT DIP GALVANIZED
3. COATING PER ASTM A123.
   ANCHOR BOLTS SHALL BE 1" X 36" X 4" (25 mm X 915 mm X 100 mm) WITH TWO HEX NUTS AND TWO FLAT WASHERS PER BOLT.
4. ANCHOR BOLTS SHALL PROJECT 2–3/4" (70 mm) ABOVE THE FOUNDATION CAP.
5. CONDUIT SHALL PROJECT 2" (50 mm) ABOVE THE FOUNDATION CAP.
6. UNSTABLE SOIL MAY REQUIRE DEEPER FOUNDATION.
7. A 25' (7.62 m) COIL OF No. 4 AWG BARE COPPER CONDUCTOR SHALL BE INSTALLED BEFORE THE CONCRETE IS POURED AND CONNECTED TO POLE GROUNDING SCREW IN THIS HAND HOLE.
8. FOUNDATION HOLE SHALL BE AUGERED AND CLASS "S" (3000 PSI) CONCRETE POURED AGAINST UNDISTURBED COMPACTED EARTH.
9. ALL POLES AND MAST ARMS TO BE STRAIGHT AND TRUE.
10. POLE TAPER: 0.14"(4 mm) PER FOOT (305 mm).

ISSUED:		STANDARD DETAIL		T.S. 4-1 DETAIL NO.
7/89	CITY OF TUCSON FOUNDED 1775	TYPE 'A' POLE	THE SEAL of PIMA COUNTY ARIZONA	T 401
REVISED: 11/04				SHEET 1 OF 1

TS4–1.DWG 12/07/00 10:48

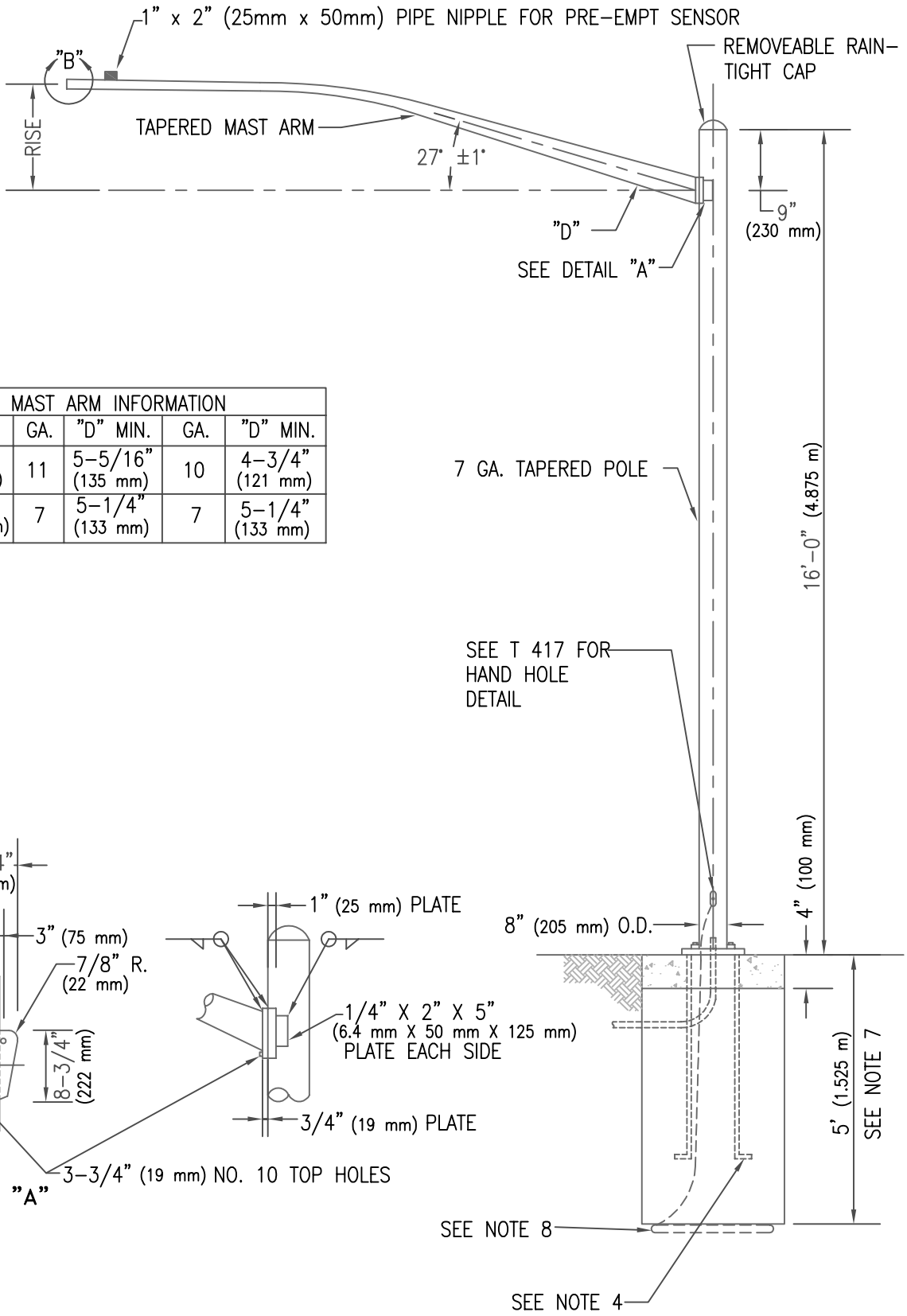

MAST ARM INFORMATION					
LGTH	RISE	GA.	"D" MIN.	GA.	"D" MIN.
15' (4.57 m)	4'-9" (1.45 m)	11	5-5/16" (135 mm)	10	4-3/4" (121 mm)
20' (6.095 m)	5'-9" (1.755 m)	7	5-1/4" (133 mm)	7	5-1/4" (133 mm)

NOTE: POLES AND MAST ARM TAPER: 0.14" (4mm) PER FOOT (305mm)
ALL POLES AND MAST ARMS TO BE STRAIGHT AND TRUE

ISSUED:	STANDARD DETAIL	T.S. 4-5 DETAIL NO.
7/89	TYPE 'E' POLE MAST ARM	T 405
REVISED: 11/04		SHEET 1 OF 2

TS4-5-1.DWG 12/07/00 10:51

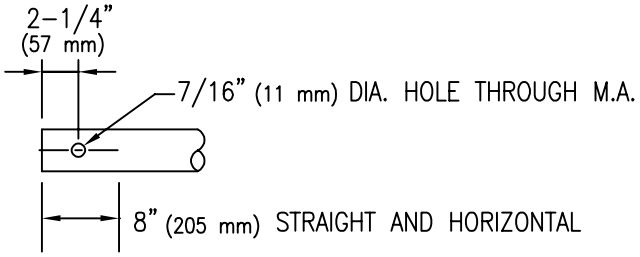

DETAIL "B"

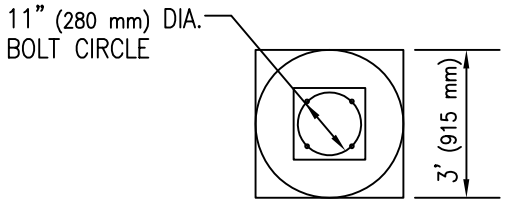

FOUNDATION PLAN

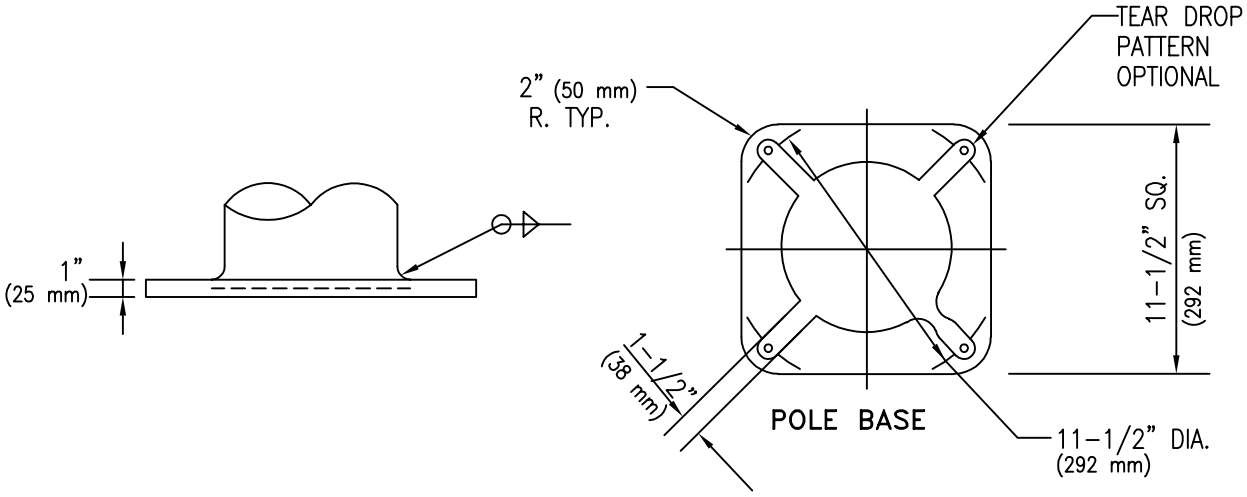

POLE BASE

NOTES:

1. ALL MATERIAL AND CONSTRICTION SHALL CONFORM TO THE REQUIREMENTS OF THE STANDARD SPECIFICATIONS.
2. THE POLE SHALL BE STEEL WITH HOT DIP GALVANIZED COATING.
3. THE SIGNAL MAST ARM SHALL BE TAPERED STEEL. SEE TABLE FOR GAUGE AND DIAMETER.
4. ANCHOR BOLTS SHALL BE 1-1/4" X 44" X 4" (32 mm X 1.115 m X 100 mm), WITH TWO HEX NUTS AND TWO FLAT WASHERS PER BOLT.
5. ANCHOR BOLTS SHALL PROJECT 3" (75 mm) ABOVE THE FOUNDATION CAP.
6. CONDUIT SHALL PROJECT 2" (50 mm) ABOVE THE FOUNDATION CAP.
7. UNSTABLE SOIL MAY REQUIRE DEEPER FOUNDATION.
8. A 25' (7.62 m) COIL OF No. 4 AWG BARE COPPER CONDUCTOR SHALL BE INSTALLED BEFORE THE CONCRETE IS POURED AND CONNECTED TO THE POLE GROUNDING SCREW IN THE HAND HOLE.
9. THE FOUNDATION HOLE SHALL BE AUGERED AND CLASS "S" (3000 PSI) CONCRETE POURED AGAINST UNDISTURBED COMPACTED EARTH.
10. ALL POLES AND MAST ARMS TO BE STRAIGHT AND TRUE.

ISSUED:		STANDARD DETAIL		DETAIL NO.
7/89		TYPE 'E' POLE MAST ARM		T 405
REVISED:				SHEET 2 OF 2
10/02				

TS4-5-2.DWG 12/07/00 10:52

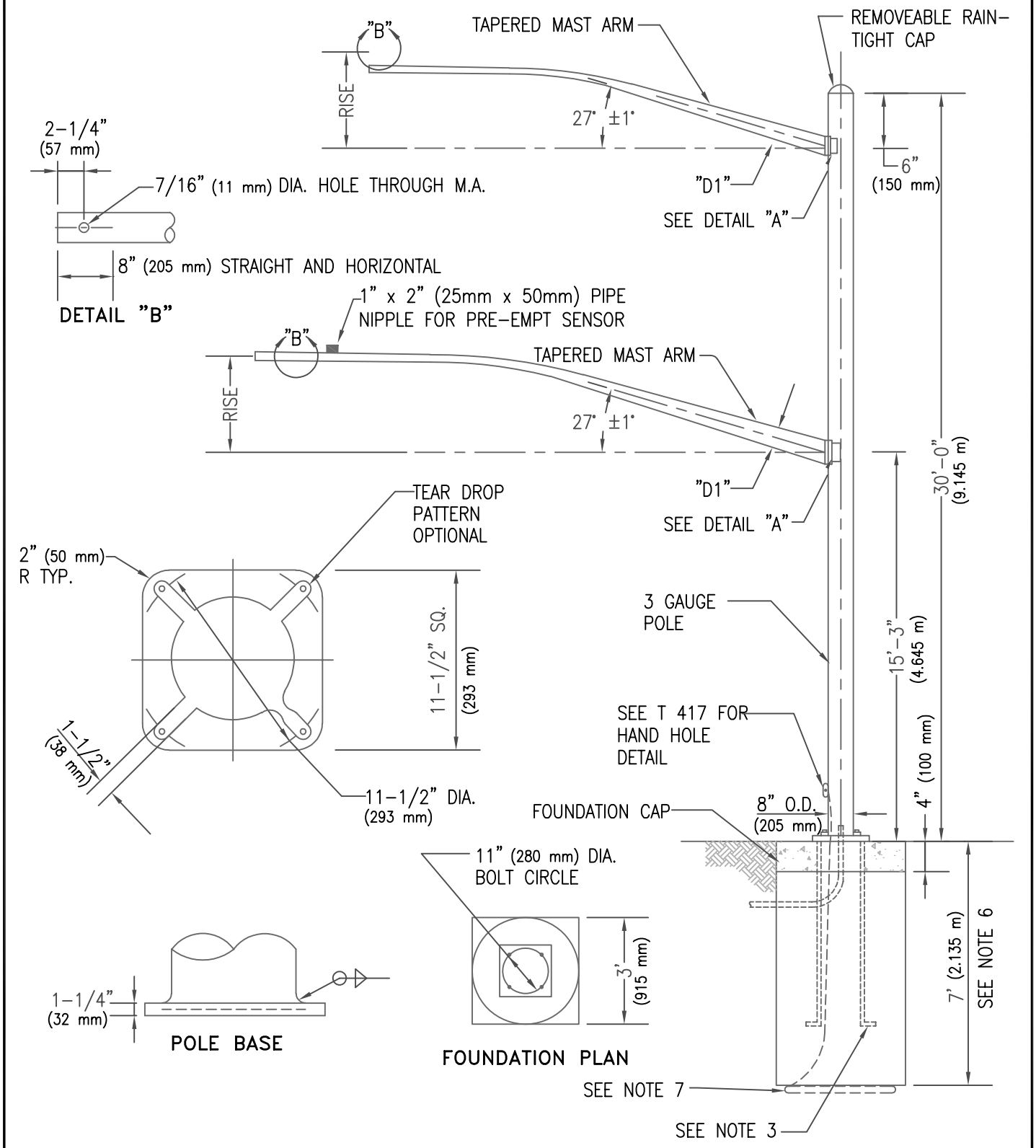

NOTE: POLES AND MAST ARM TAPER: 0.14" (4mm) PER FOOT (305mm)
ALL POLES AND MAST ARMS TO BE STRAIGHT AND TRUE
ALL MAST ARMS SHALL HAVE A 90° PIPE TENON. REFER TO STD. DET. T 412, DETAIL "B"

ISSUED:		STANDARD DETAIL		T.S. 4-6 DETAIL NO.
7/89		TYPE 'F' POLE MAST ARM		T 406
REVISED:				
11/04				SHEET 1 OF 2

TS4-6-1.DWG 12/07/00 10:53

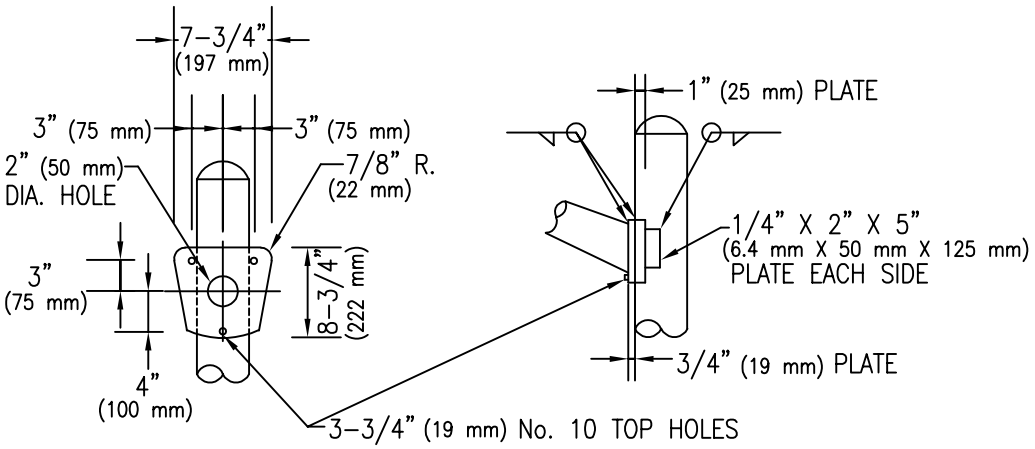

DETAIL "A"

MAST ARM INFORMATION						
LGTH	RISE	GA.	"D1" MIN.	"D2" MIN.	GA.	"D1 & D2" MIN.
15' (4.57 m)	4'-9" (1.45 m)	11	4-1/4" (108 mm)	5-5/16" (135 mm)	10	4-3/4" (121 mm)
20' (6.095 m)	5'-9" (1.755 m)	7	5-1/4" (133 mm)	5-1/4" (133 mm)	7	5-1/4" (133 mm)

NOTES:

1. ALL MATERIAL AND CONSTRUCTION SHALL CONFORM TO THE REQUIREMENTS OF THE STANDARD SPECIFICATIONS.
2. THE POLE SHALL BE STEEL WITH HOT DIP GALVANIZED COATING PER ASTM A123. SEE TABLE
3. FOR MAST ARM GAUGES.
4. ANCHOR BOLTS SHALL BE 1-1/4" X 44" X 4" (32 mm X 1.115 m X 100 mm), WITH TWO HEX NUTS AND TWO FLAT WASHERS PER BOLT.
5. ANCHOR BOLTS SHALL PROJECT 3" (75 mm) ABOVE THE FOUNDATION CAP.
6. CONDUIT SHALL PROJECT 2" (50 mm) ABOVE THE FOUNDATION CAP.
7. UNSTABLE SOIL MAY REQUIRE DEEPER FOUNDATION.
8. A 25' (7.62 m) COIL OF No. 4 AWG BARE COPPER CONDUCTOR SHALL BE INSTALLED BEFORE THE CONCRETE IS POURED AND CONNECTED TO THE POLE GROUNDING SCREW IN THE HAND HOLE.
9. THE FOUNDATION HOLE SHALL BE AUGERED AND CLASS "S" (3000 PSI) CONCRETE POURED AGAINST UNDISTURBED COMPACTED EARTH.
   ALL POLES AND MAST ARMS TO BE STRAIGHT AND TRUE.

ISSUED:	STANDARD DETAIL	DETAIL NO.
7/89	TYPE 'F' POLE MAST ARM	T 406
REVISED: 10/02		SHEET 2 OF 2

TS4-6-2.DWG 12/07/00 10:53

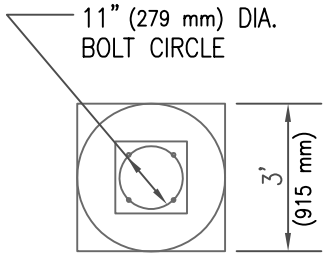

FOUNDATION PLAN

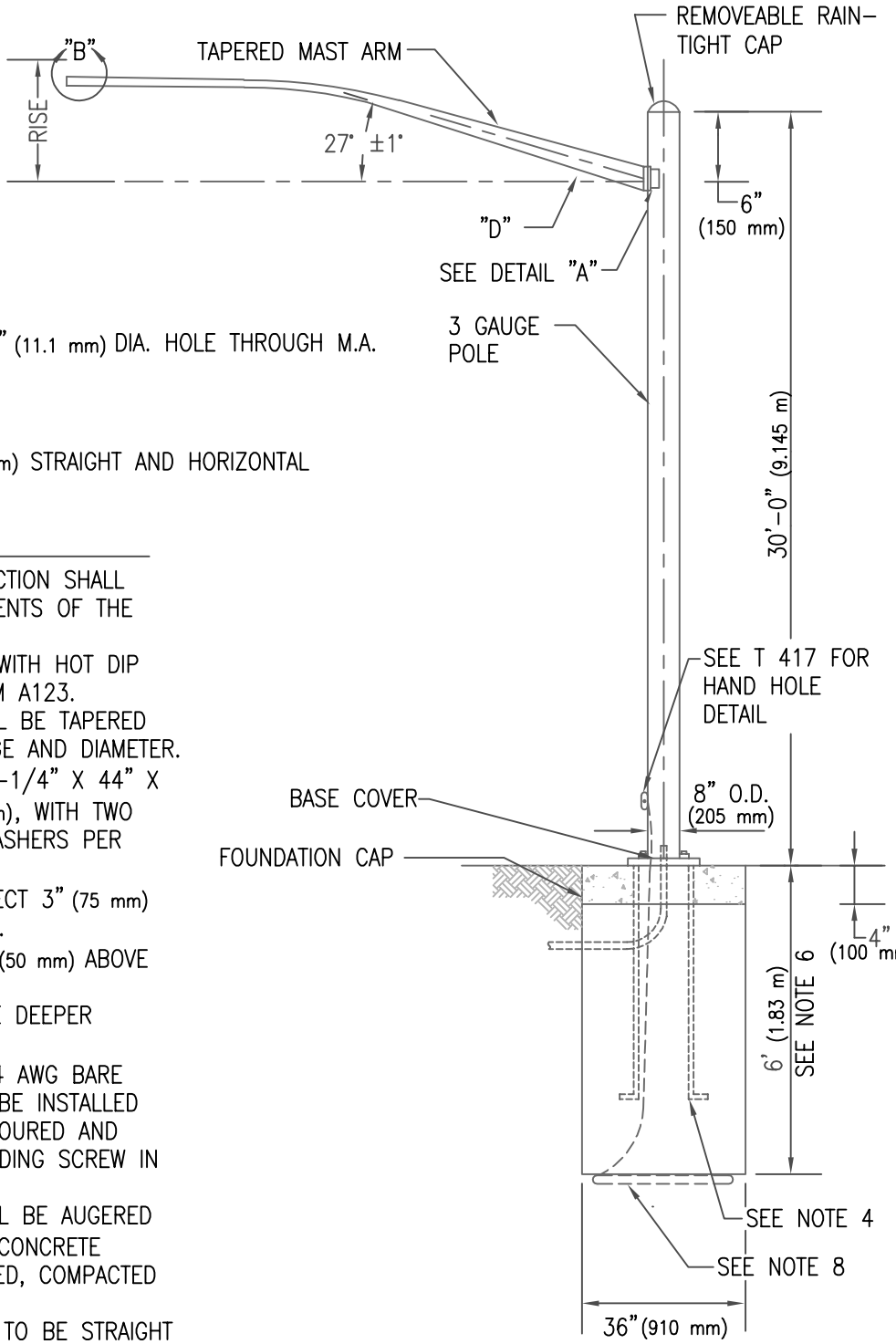

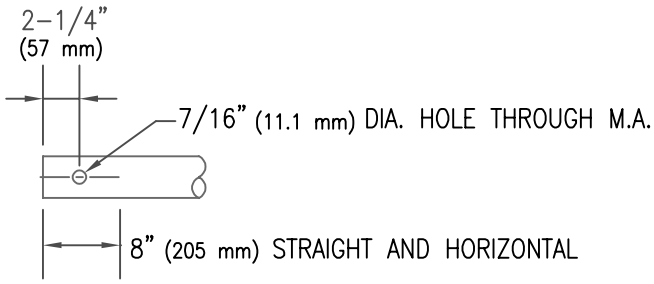

DETAIL "B"

NOTES:

1. ALL MATERIAL AND CONSTRUCTION SHALL CONFORM TO THE REQUIREMENTS OF THE SPECIFICATIONS.
2. THE POLE SHALL BE STEEL WITH HOT DIP GALVANIZED FINISH PER ASTM A123.
3. THE SIGNAL MAST ARM SHALL BE TAPERED STEEL. SEE TABLE FOR GAUGE AND DIAMETER.
4. ANCHOR BOLTS SHALL BE 1-1/4" X 44" X 4" (32 mm X 1.115 m X 100 mm), WITH TWO HEX NUTS AND TWO FLAT WASHERS PER BOLT.
5. ANCHOR BOLTS SHALL PROJECT 3" (75 mm) ABOVE THE FOUNDATION CAP.
6. CONDUIT SHALL PROJECT 2" (50 mm) ABOVE THE FOUNDATION CAP
7. UNSTABLE SOIL MAY REQUIRE DEEPER FOUNDATIONS.
8. A 25' (7.62 m) COIL OF No. 4 AWG BARE COPPER CONDUCTOR SHALL BE INSTALLED BEFORE THE CONCRETE IS POURED AND CONNECTED TO POLE GROUNDING SCREW IN THE HAND HOLE.
9. THE FOUNDATION HOLE SHALL BE AUGERED AND CLASS "S" (3000 PSI) CONCRETE POURED AGAINST UNDISTURBED, COMPACTED EARTH.
10. ALL POLES AND MAST ARMS TO BE STRAIGHT AND TRUE.

NOTE: POLES AND MAST ARM TAPER: 0.14" (4mm) PER FOOT (305mm)

ISSUED:		STANDARD DETAIL		T.S. 4-7 DETAIL NO.
7/89		TYPE 'G' POLE MAST ARM		T 407
REVISED: 11/04				SHEET 1 OF 2

TS4-7-1.DWG 12/07/00 10:54

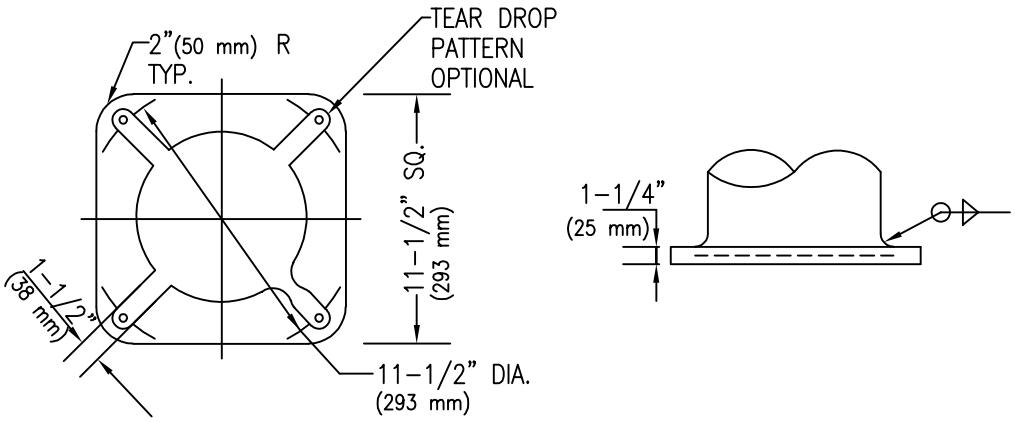

POLE BASE

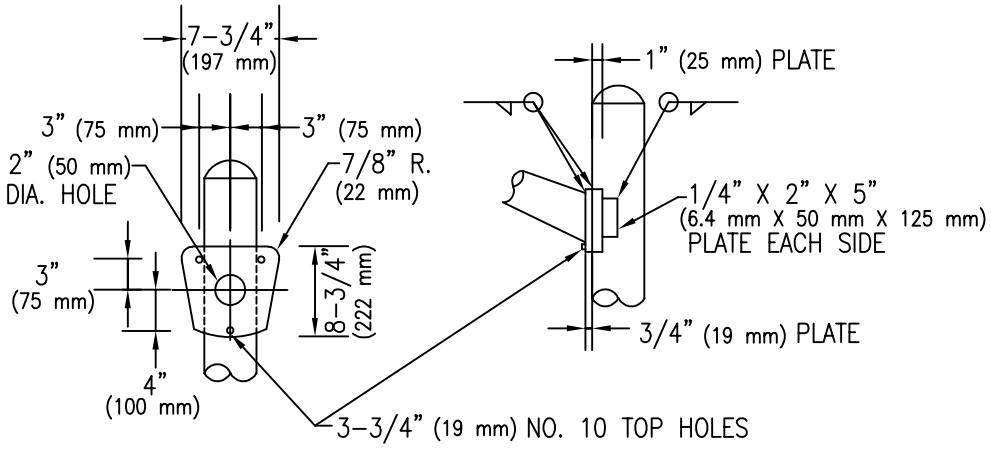

DETAIL "A"

MAST ARM INFORMATION					
LGTH	RISE	GA.	"D" MIN.	GA.	"D" MIN.
15' (4.57 m)	4'-9" (1.45 m)	11	4-1/4" (108 mm)	10	4-3/4" (121 mm)
20' (6.095 m)	5'-9" (1.755 m)	7	5-1/4" (133 mm)	7	5-1/4" (133 mm)

ISSUED:	STANDARD DETAIL	DETAIL NO.
7/89	TYPE 'G' POLE MAST ARM	T 407
REVISED: 10/02		SHEET 2 OF 2

TS4-7-2.DWG 12/07/00 10:55

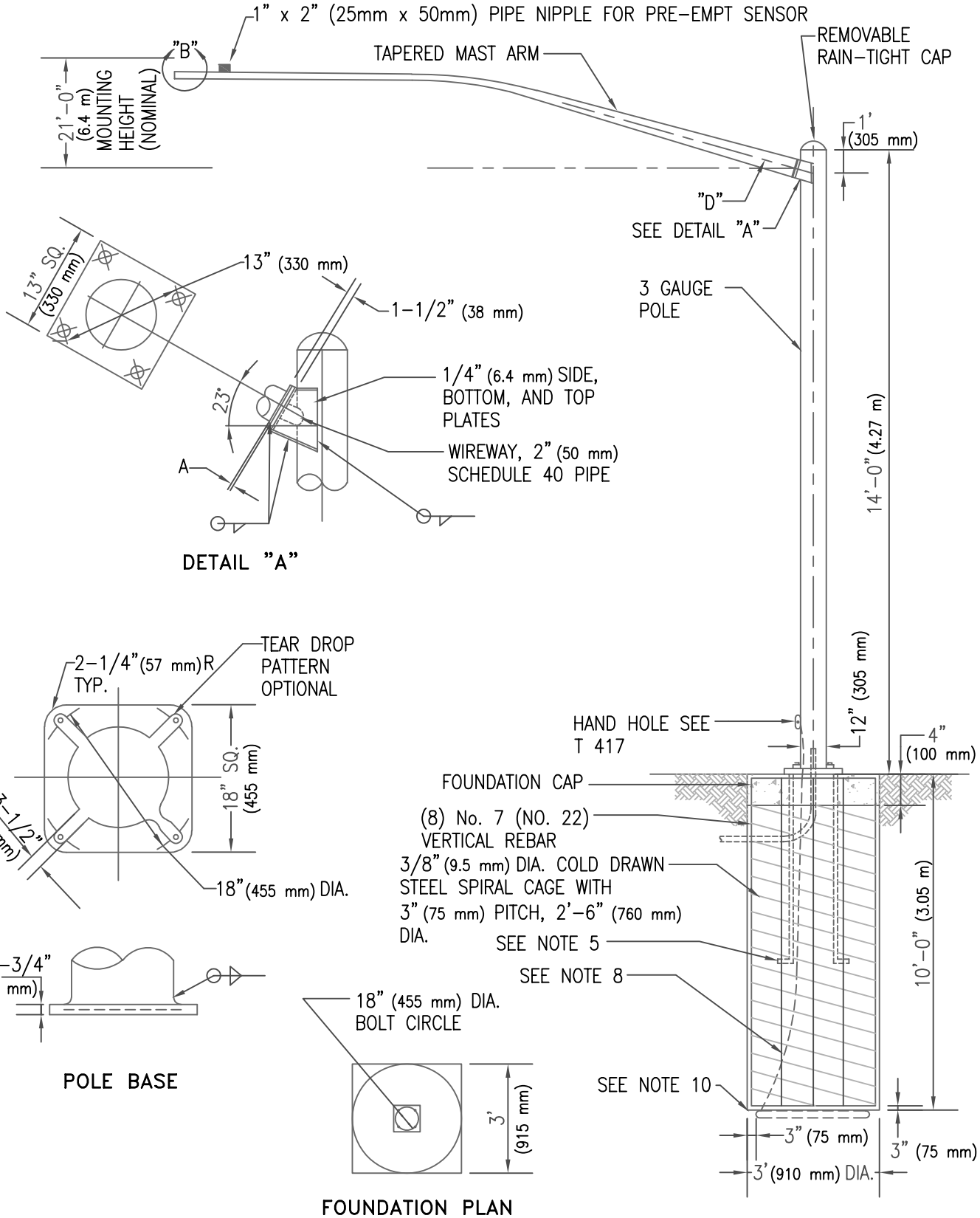

NOTE: POLES AND MAST ARM TAPER: 0.14" (4mm) PER FOOT (305mm)
ALL POLES AND MAST ARMS TO BE STRAIGHT AND TRUE

ISSUED:	STANDARD DETAIL	T.S. 4-10 DETAIL NO.
7/89	TYPE 'J' POLE MAST ARM	T 410
REVISED: 11/04		SHEET 1 OF 2

TS4-10-1.DWG 12/07/00 10:56

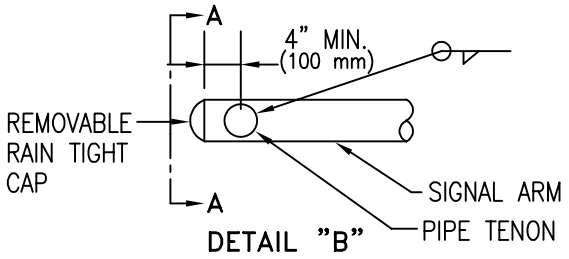

DETAIL "B"

MAST ARM INFORMATION				
NOM M.A. LENGTH	25' (7.62 m)	30' (9.145 m)	35' (10.67 m)	40' (12.19 m)
GAUGE	7	7	3	3
A	1" (25 mm)	1" (25 mm)	1-1/4" (32 mm)	1-1/4" (32 mm)
B MIN.	7" (178 mm)	8" (203 mm)	6-11/16" (221 mm)	9-3/8" (239 mm)

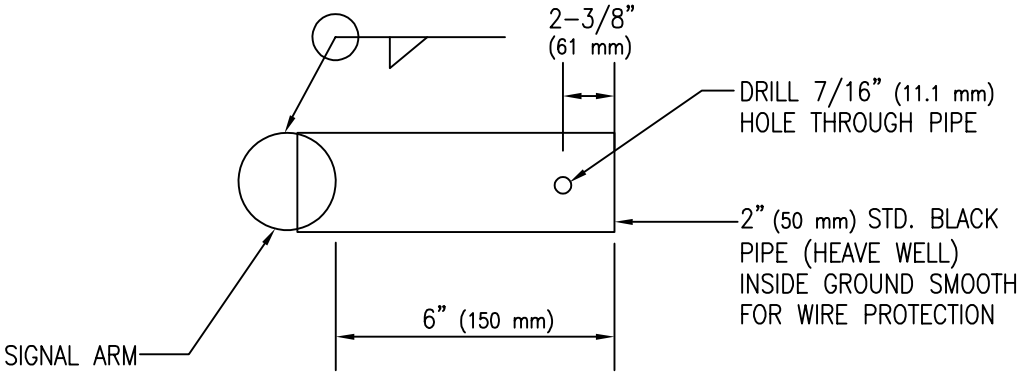

SECTION A – A

NOTES:

1. ALL MATERIALS AND CONSTRUCTION SHALL CONFORM TO THE REQUIREMENTS OF THE SPECIFICATIONS. HOT DIP GALVANIZED FINISH SHALL BE PER ASTM A123.
2. THE POLE SHALL BE TAPERED STEEL. WALL THICKNESS SHALL BE 3 GAUGES.
3. THE SIGNAL MAST ARM SHALL BE TAPERED STEEL. SEE TABLE FOR DIAMETER AND GAUGE.
4. SIGNAL MAST ARMS REQUIRE FOUR 1-1/4" (32 mm) – 7 HIGH STRENGTH BOLTS ASTM A 325.
5. ANCHOR BOLTS SHALL BE 2" X 90" X 6" (50 mm X 2.285 m X 150 mm) WITH TWO HEX NUTS AND TWO FLAT WASHERS PER BOLT.
6. ANCHOR BOLTS SHALL PROJECT 4-1/2" (115 mm) ABOVE THE FOUNDATION CAP.
7. CONDUIT SHALL PROJECT 2" (50 mm) ABOVE THE FOUNDATION CAP.
8. THE FOUNDATION HOLE SHALL BE AUGERED AND CLASS "S" (3000 PSI) CONCRETE POURED AGAINST UNDISTURBED, COMPACTED EARTH.
9. UNSTABLE SOIL MAY REQUIRE DEEPER FOUNDATION.
10. A 25' (7.62 m) COIL OF NO. 4 AWG BARE COPPER CONDUCTOR SHALL BE INSTALLED BEFORE THE CONCRETE IS POURED AND CONNECTED TO POLE GROUNDING SCREW IN THE HAND HOLE.
11. FOR INBOARD TENON, WHEN SPECIFIED, SEE TENON DETAIL ON T 901.
12. ALL POLES AND MAST ARMS TO BE STRAIGHT AND TRUE.

ISSUED:		STANDARD DETAIL		DETAIL NO.
7/89	CITY OF TUCSON FOUNDED 1775	TYPE 'J' POLE MAST ARM	THE SEAL of PIMA COUNTY ARIZONA	T 410
REVISED: 10/02				SHEET 2 OF 2

TS4-10-2.DWG 12/07/00 10:56

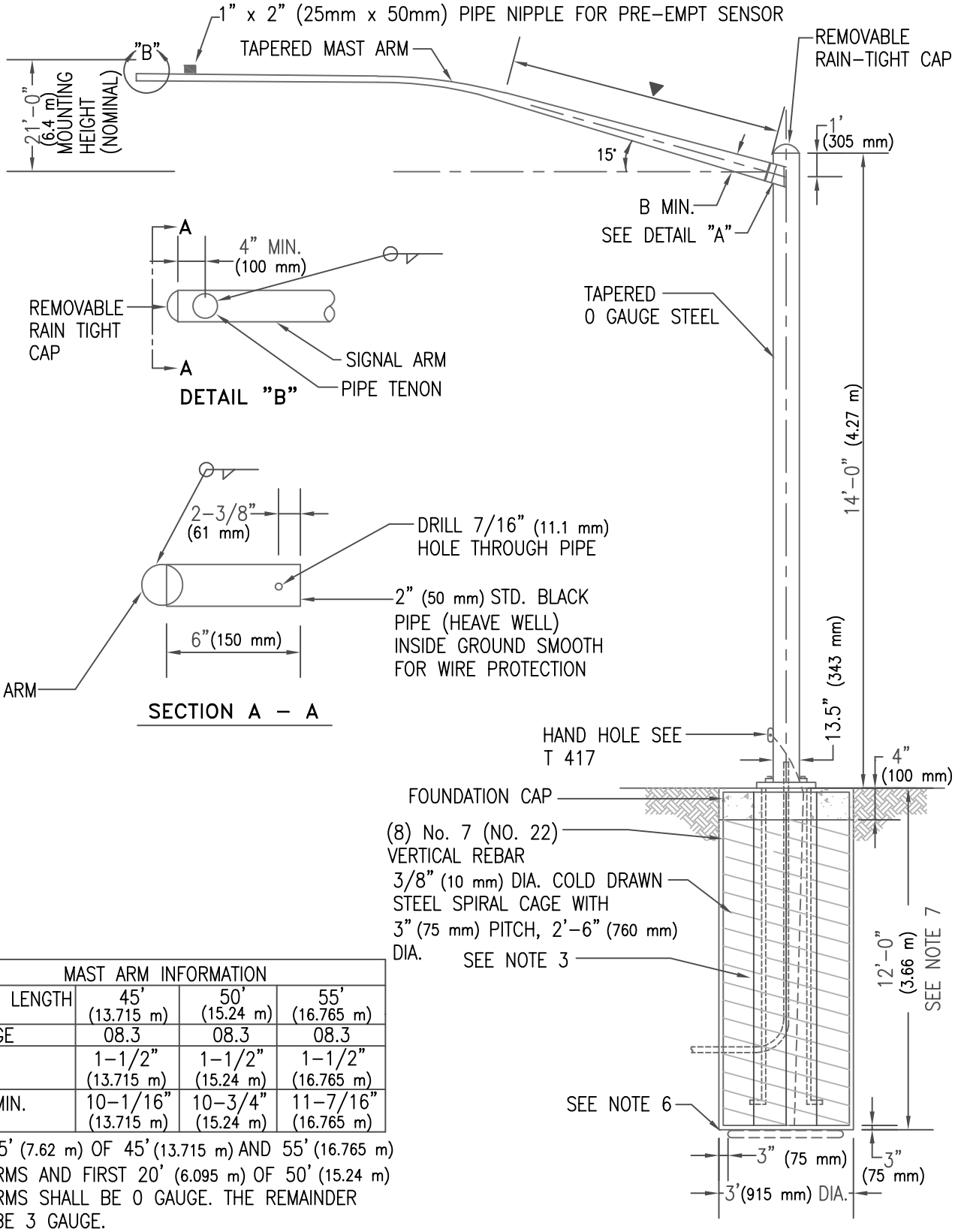

MAST ARM INFORMATION			
NOM M.A. LENGTH	45' (13.715 m)	50' (15.24 m)	55' (16.765 m)
GAUGE	08.3	08.3	08.3
A	1-1/2" (13.715 m)	1-1/2" (15.24 m)	1-1/2" (16.765 m)
B MIN.	10-1/16" (13.715 m)	10-3/4" (15.24 m)	11-7/16" (16.765 m)

▼FIRST 25' (7.62 m) OF 45' (13.715 m) AND 55' (16.765 m) MAST ARMS AND FIRST 20' (6.095 m) OF 50' (15.24 m) MAST ARMS SHALL BE 0 GAUGE. THE REMAINDER SHALL BE 3 GAUGE.

NOTE: POLES AND MAST ARM TAPER: 0.14" (4mm) PER FOOT (305mm)
ALL POLES AND MAST ARMS TO BE STRAIGHT AND TRUE

ISSUED:	STANDARD DETAIL	T.S. 4-11 DETAIL NO.
7/89	TYPE 'K' POLE MAST ARM	T 411
REVISED: 11/04		SHEET 1 OF 2

TS4-11-1.DWG 12/07/00 10:59

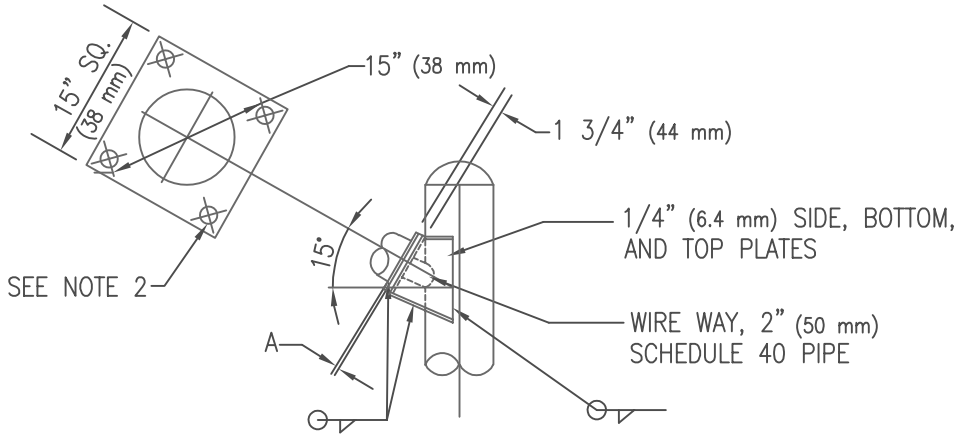

DETAIL "A"

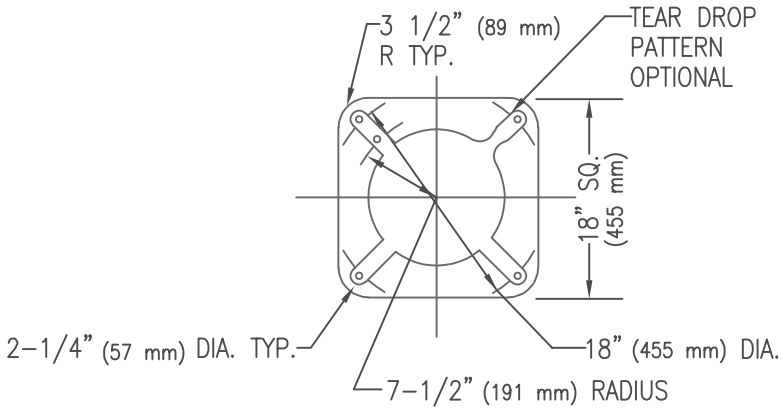

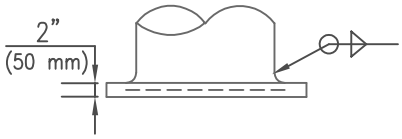

POLE BASE

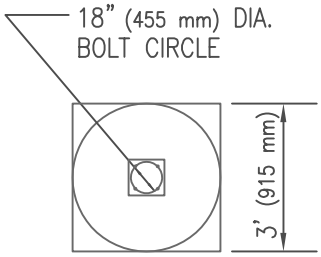

FOUNDATION PLAN

NOTES:

1. ALL MATERIALS AND CONSTRUCTION SHALL CONFORM TO THE REQUIREMENTS OF THE STANDARD SPECIFICATIONS. HOT DIP GALVANIZED FINISH PER ASTM A123.
2. MAST ARMS REQUIRE FOUR 11" (32 mm) – 7 HIGH STRENGTH BOLTS ASTM A 325.
3. ANCHOR BOLTS SHALL BE 2" X 90" X 6" (50 mm X 2.285 m X 150 mm), WITH TWO HEX NUTS AND TWO FLAT WASHERS PER BOLT.
4. ANCHOR BOLTS SHALL PROJECT 41" (115 mm) ABOVE THE FOUNDATION CAP.
5. CONDUIT SHALL PROJECT 2" (50 mm) ABOVE THE FOUNDATION CAP.
6. THE FOUNDATION HOLE SHALL BE AUGERED AND CLASS "S" (3000 PSI) CONCRETE POURED AGAINST UNDISTURBED COMPACTED EARTH.
7. UNSTABLE FOIL MAY REQUIRE DEEPER FOUNDATION. SEE SPECIFICATIONS.
8. A 25' (7.62 m) COIL OF NO. 4 AWG BARE COPPER CONDUCTOR SHALL BE INSTALLED BEFORE THE CONCRETE IS POURED AND CONNECTED TO THE POLE GROUNDING SCREW IN THE HAND HOLE.
9. FOR INBOARD TENON, WHEN SPECIFIED SEE TENON DETAIL ON T 901.
10. ALL POLES AND MAST ARMS TO BE STRAIGHT AND TRUE.

				T.S. 4-11
ISSUED:	CITY OF TUCSON	STANDARD DETAIL	THE SEAL of PIMA COUNTY ARIZONA	DETAIL NO.
7/89		TYPE 'K' POLE MAST ARM		T 411
REVISED:				
11/04				SHEET 2 OF 2

TS4-11-2.DWG 12/07/00 11:00

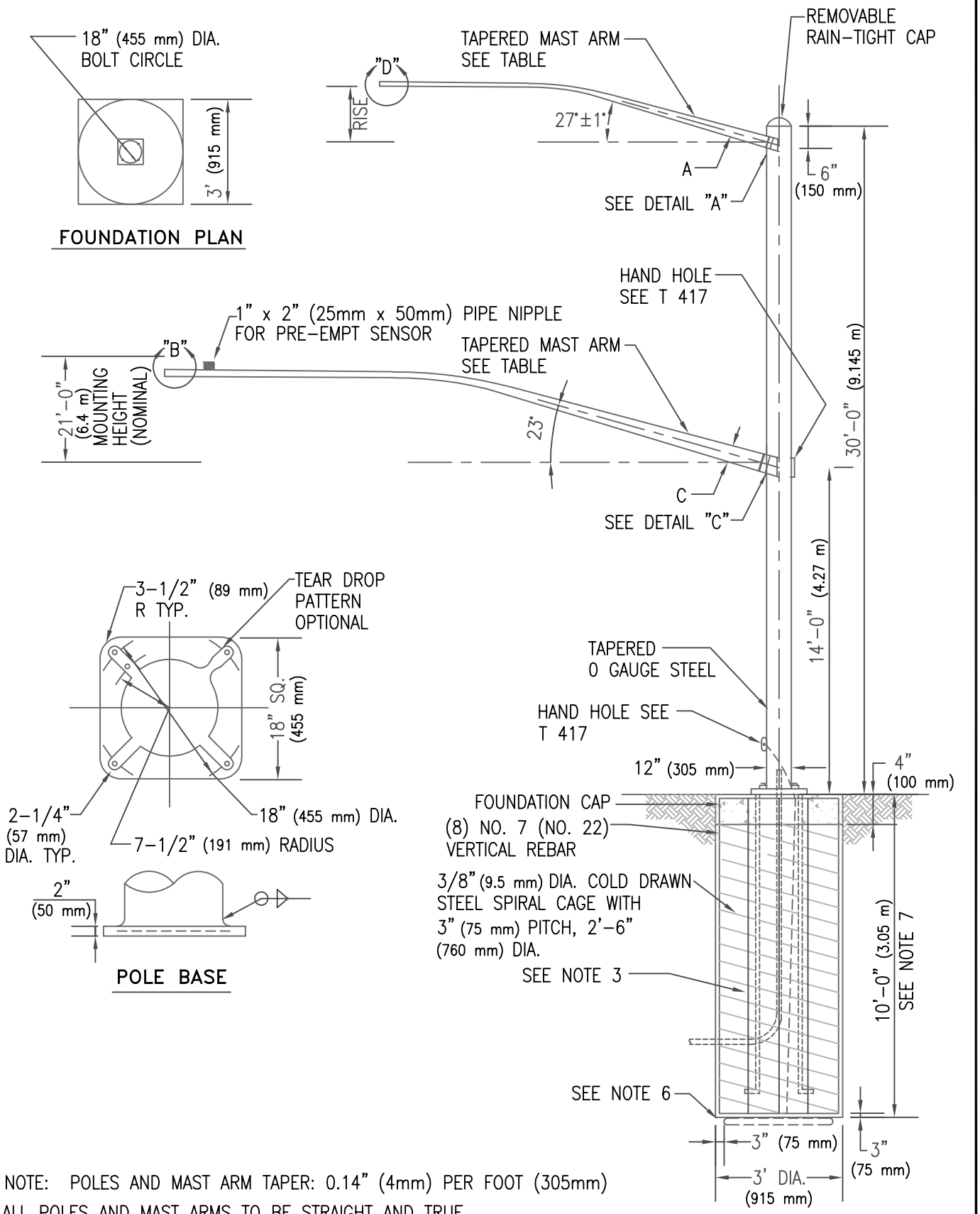

NOTE: POLES AND MAST ARM TAPER: 0.14" (4mm) PER FOOT (305mm)

ALL POLES AND MAST ARMS TO BE STRAIGHT AND TRUE

ISSUED:	STANDARD DETAIL	T.S. 4-12 DETAIL NO.
7/89	TYPE 'Q' POLE MAST ARM	T 412
REVISED: 11/04		SHEET 1 OF 3

CITY OF TUCSON FOUNDED 1775

THE SEAL of PIMA COUNTY ARIZONA

TS4-12-1.DWG 12/07/00 11:01

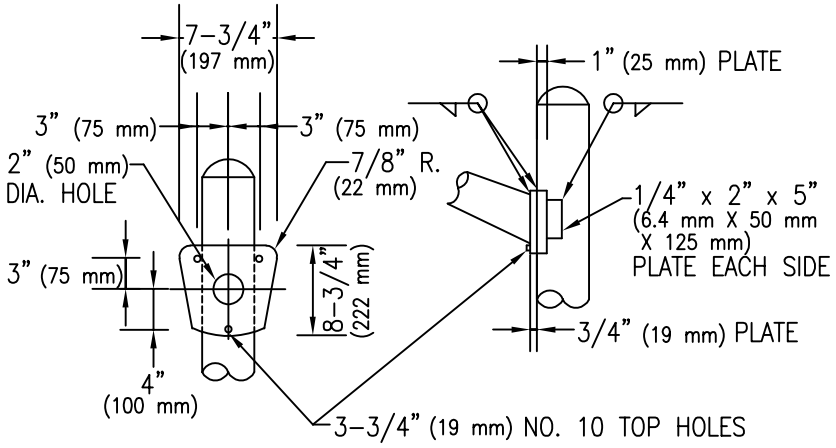

DETAIL "A"

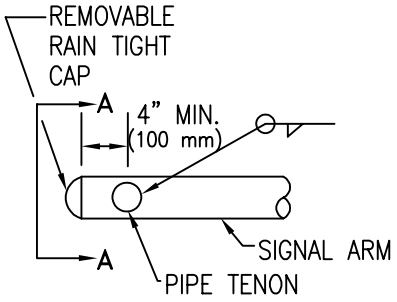

DETAIL "B"

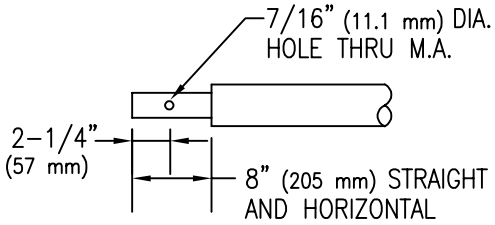

DETAIL "B"

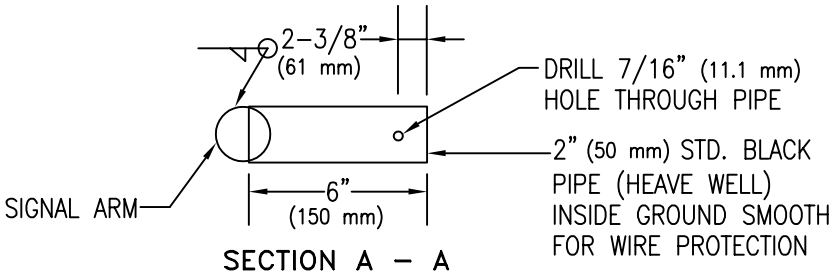

SECTION A – A

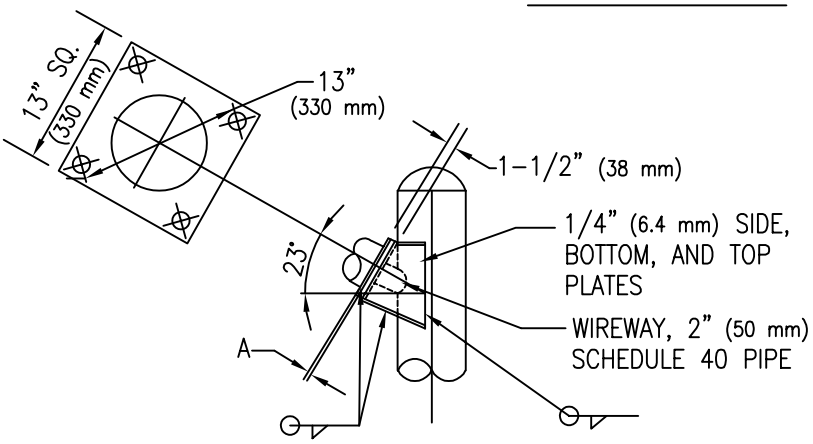

DETAIL "C"

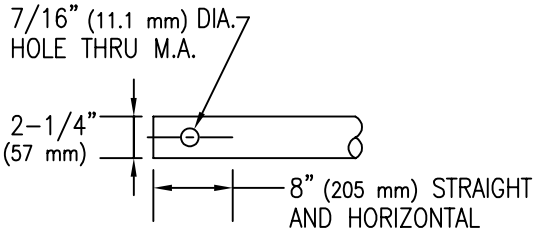

DETAIL "D"

ALL POLES AND MAST ARMS TO BE STRAIGHT AND TRUE

ISSUED:		STANDARD DETAIL		DETAIL NO.
7/89		TYPE 'Q' POLE MAST ARM		T 412
REVISED:				
10/02				SHEET 2 OF 3

TS4-12-2.DWG 12/07/00 11:02

	MAST ARM INFORMATION						
	NOM M.A. LENGTH	LUM. M.A. RISE	M.A. GAUGE	"A" MIN. 11 GA.	"A" MIN. 10 GA.	B	C MIN.
LUMINAIRE	6' (1.833 m)	2'–0" (610 mm)	11 OR 10	3–1/4" (82 mm)	3–3/8" (86 mm)	---	---
LUMINAIRE	8' (2.44 m)	2'–6" (760 mm)	11 OR 10	3–1/2" (89 mm)	3–5/8" (92 mm)	---	---
LUMINAIRE	10' (3.05 m)	3'–4" (1.015 m)	11 OR 10	3–13/16" (96 mm)	3–7/8" (98 mm)	---	---
LUMINAIRE	12' (3.66 m)	4'–3" (1.296 m)	11 OR 10	4–1/6" (104 mm)	4–5/16" (110 mm)	---	---
LUMINAIRE	15' (4.57 m)	4'–9" (1.45 m)	11 OR 10	4–1/4" (108 mm)	4–3/4" (121 mm)	---	---
LUMINAIRE	18' (5.485 m)	5'–9" (1.755 m)	11 OR 10	5–3/4" (146 mm)	5–3/16" (132 mm)	---	---
LUMINAIRE	20' (6.095 m)	5'–9" (1.755 m)	7	5–1/4" (133 mm)	5–1/4" (133 mm)	---	---
SIGNAL	25' (7.62 m)	---	7	---	6" (150 mm)	1" (25 mm)	7" (178 mm)
SIGNAL	30' (9.145 m)	---	7	---	6" (150 mm)	1" (25 mm)	8" (205 mm)
SIGNAL	35' (10.67 m)	---	3	---	6" (150 mm)	1–1/4" (32 mm)	8–11/16" (221 mm)
SIGNAL	40' (12.19 m)	---	3	---	6" (150 mm)	1–1/4" (32 mm)	9–3/8" (239 mm)

NOTES:

1. ALL MATERIALS AND CONSTRUCTION SHALL CONFORM TO THE REQUIREMENTS OF THE STANDARD SPECIFICATIONS.
2. THE POLE SHALL BE 3 GAUGE TAPERED STEEL. ALTERNATE: THE TOP 10' (3.05 m) OF POLE MAY BE 10 OR 11 GAUGE. HOT DIP GALVANIZED FINISH PER ASTM A123.
3. FOUR 1–1/4" (32 mm) – 7 HIGH STRENGTH BOLTS ARE REQUIRED FOR THE SIGNAL MAST ARMS. ASTM A 325.
4. ANCHOR BOLTS SHALL BE 2" X 90" X 6" (50 mm X 2.285 m X 150 mm), WITH TWO HEX NUTS AND TWO FLAT WASHERS PER BOLT.
5. ANCHOR BOLTS SHALL PROJECT 4–1/2" (115 mm) ABOVE THE FOUNDATION CAP.
6. CONDUIT SHALL PROJECT 2" (50 mm) ABOVE THE FOUNDATION CAP.
7. THE FOUNDATION HOLE SHALL BE AUGERED AND CLASS "S" (3000 PSI) CONCRETE POURED AGAINST UNDISTURBED COMPACTED EARTH.
8. UNSTABLE SOIL MAY REQUIRE DEEPER FOUNDATION.
9. A 25' (7.62 m) COIL OF #4 AWG BARE COPPER CONDUCTOR SHALL BE INSTALLED BEFORE THE CONCRETE IS POURED, AND CONNECTED TO POLE GROUNDING SCREW IN THE HAND HOLE.
10. FOR INBOARD TENON WHEN SPECIFIED, SEE TENON DETAIL ON T 901.
11. ALL POLES AND MAST ARMS TO BE STRAIGHT AND TRUE.

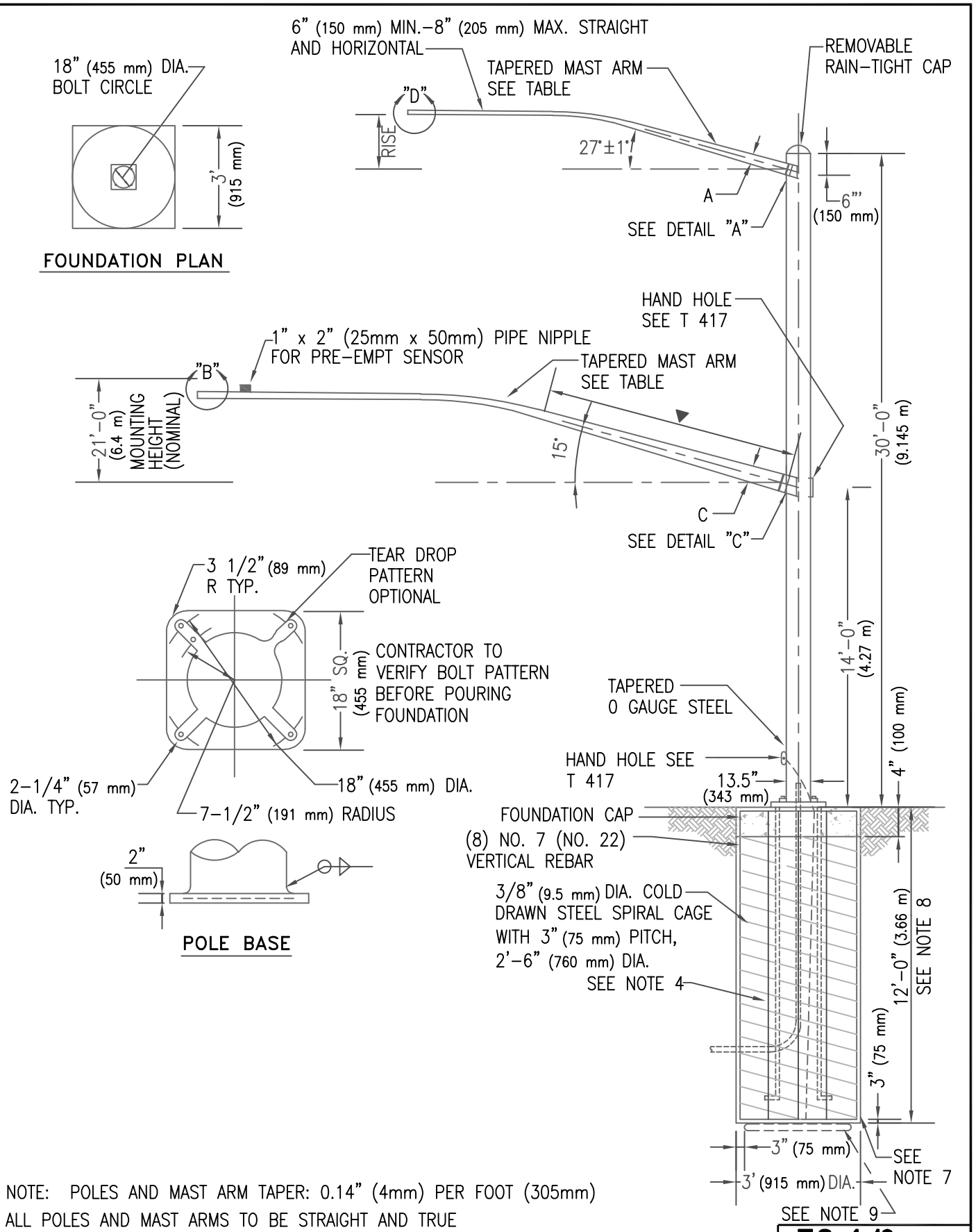

NOTE: POLES AND MAST ARM TAPER: 0.14" (4mm) PER FOOT (305mm)
ALL POLES AND MAST ARMS TO BE STRAIGHT AND TRUE

ISSUED:	CITY OF TUCSON FOUNDED 1775	STANDARD DETAIL	THE SEAL of PIMA COUNTY ARIZONA	T.S. 4-13 DETAIL NO.
7/89		TYPE 'R' POLE MAST ARM		T 413
REVISED: 11/04				SHEET 1 OF 3

TS4–13–1.DWG 12/07/00 11:03

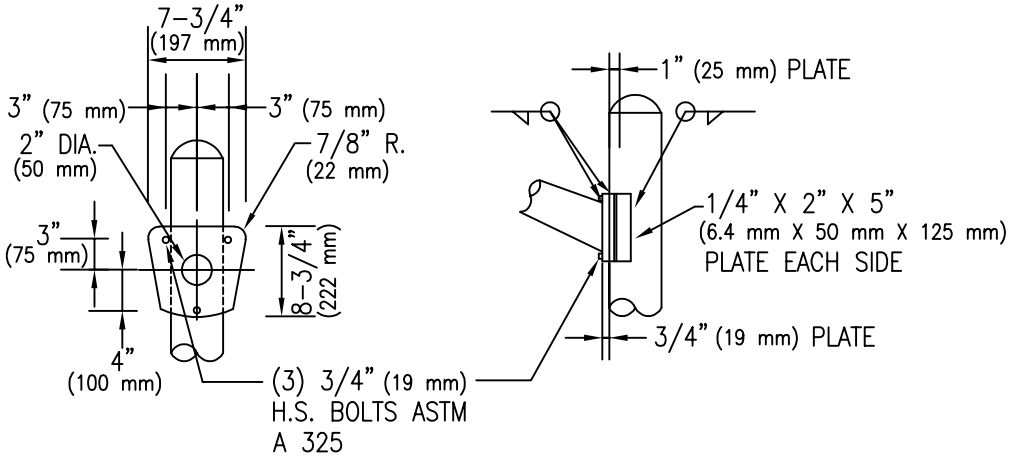

DETAIL "A"

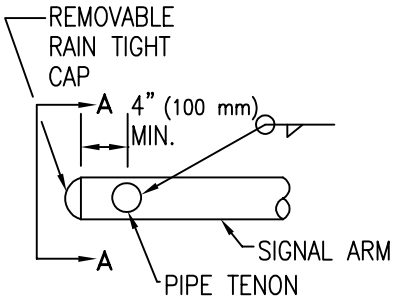

DETAIL "B"

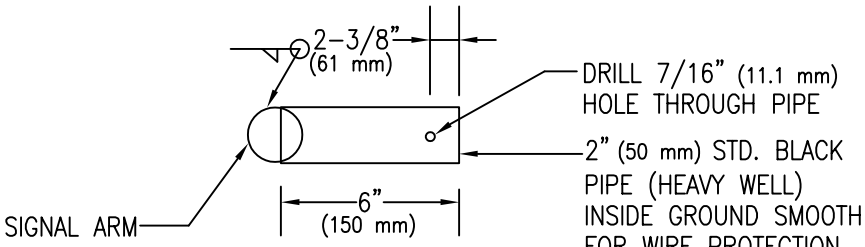

SECTION A – A

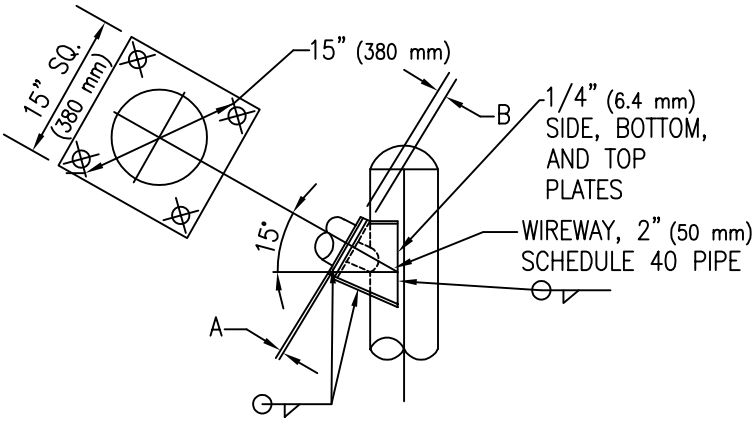

DETAIL "C"

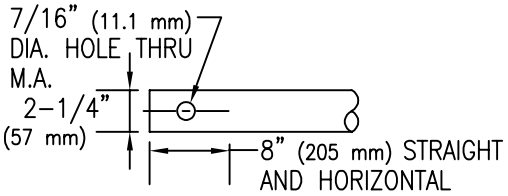

DETAIL "D"

ALL POLES AND MAST ARMS TO BE STRAIGHT AND TRUE

ISSUED:		STANDARD DETAIL		DETAIL NO.
7/89		TYPE 'R' POLE MAST ARM		T 413
REVISED:				
10/02				SHEET 2 OF 3

TS4-13-2.DWG 12/07/00 11:05

	MAST ARM INFORMATION					
	NOM M.A. LENGTH	LUM. M.A. RISE	M.A. GAUGE	"A" (MIN.)		"B" (MIN.)
				11 GA.	10 GA.	
LUMINAIRE	6' (1.833 m)	2'-0" (610 mm)	11 OR 10	3-1/4" (82 mm)	3-3/8" (86 mm)	---
	8' (2.44 m)	2'-6" (760 mm)	11 OR 10	3-1/2" (89 mm)	3-5/8" (92 mm)	---
	10' (3.05 m)	3'-4" (1.015 m)	11 OR 10	3-13/16" (96 mm)	3-7/8" (98 mm)	---
	12' (3.66 m)	4'-3" (1.296 m)	11 OR 10	4-1/6" (104 mm)	4-5/16" (110 mm)	---
	15' (4.57 m)	4'-9" (1.45 m)	11 OR 10	4-1/4" (108 mm)	4-3/4" (121 mm)	---
	18' (5.485 m)	5'-9" (1.755 m)	11 OR 10	5-3/4" (146 mm)	5-3/16" (132 mm)	---
	20' (6.095 m)	5'-9" (1.755 m)	7	5-1/4" (133 mm)	5-1/4" (133 mm)	---
SIGNAL	45' (13.715 m)	---	0 & 3▼	---	---	10-1/16" (256 mm)
	50' (15.24 m)	---	0 & 3▼	---	---	10-3/4" (273 mm)
	55' (16.765 m)	---	0 & 3▼	---	---	11-7/16" (290 mm)

▼FIRST 25' (7.62 m) OF 45' (13.715 m) AND 55' (16.765 m) MAST ARMS AND FIRST 20' (6.095 m) OF 50' (15.24 m) MAST ARMS SHALL BE 10 GAUGE. THE REMAINDER SHALL BE 3 GAUGE.

NOTES:

1. ALL MATERIALS AND CONSTRUCTION SHALL CONFORM TO THE REQUIREMENTS OF THE STANDARD SPECIFICATIONS.
2. THE POLE SHALL BE 3 GAUGE TAPERED STEEL. ALTERNATE: THE TOP 10' (3.05 m) OF POLE MAY BE 10 OR 11 GAUGE. HOT DIP GALVANIZED FINISH PER ASTM A123.
3. FOUR 1-1/4" (32 mm) - 7 HIGH STRENGTH BOLTS ARE REQUIRED FOR THE SIGNAL MAST ARMS. ASTM A 325.
4. ANCHOR BOLTS SHALL BE 2" X 90" X 6" (50 mm X 2.285 m X 150 mm), WITH TWO HEX NUTS AND TWO FLAT WASHERS PER BOLT.
5. ANCHOR BOLTS SHALL PROJECT 4-1/2" (115 mm) ABOVE THE FOUNDATION CAP.
6. CONDUIT SHALL PROJECT 2" (50 mm) ABOVE THE FOUNDATION CAP.
7. THE FOUNDATION HOLE SHALL BE AUGERED AND CLASS "S" (3000 PSI) CONCRETE POURED AGAINST UNDISTURBED COMPACTED EARTH.
8. UNSTABLE SOIL MAY REQUIRE DEEPER FOUNDATION.
9. A 25' (7.62 m) COIL OF #4 AWG BARE COPPER CONDUCTOR SHALL BE INSTALLED BEFORE THE CONCRETE IS POURED, AND CONNECTED TO POLE GROUNDING SCREW IN THE HAND HOLE.
10. FOR INBOARD TENON WHEN SPECIFIED, SEE TENON DETAIL ON T 901.
11. ALL POLES AND MAST ARMS TO BE STRAIGHT AND TRUE.

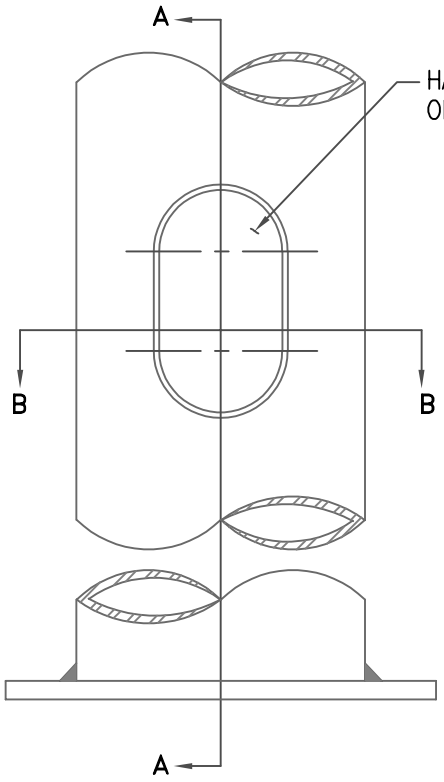

HAND HOLE DETAIL

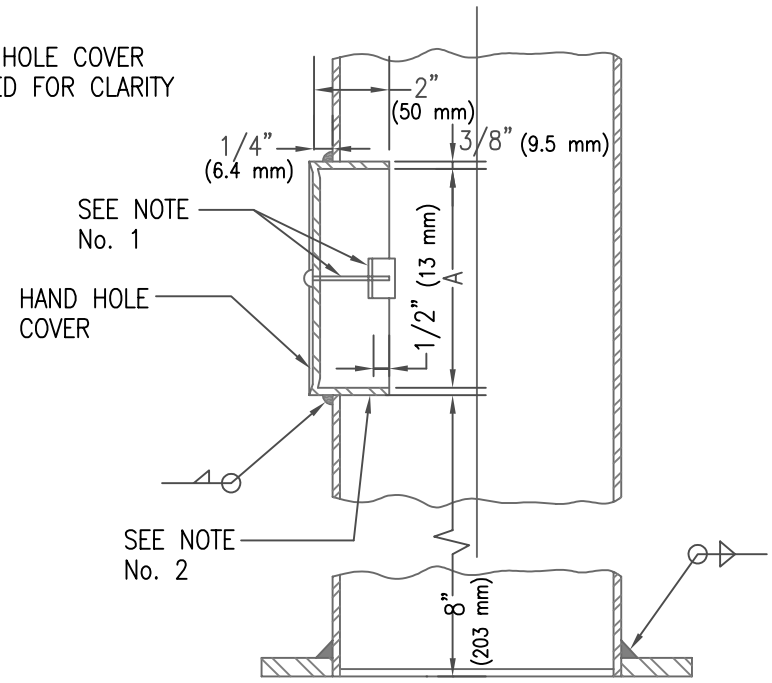

SECTION A–A

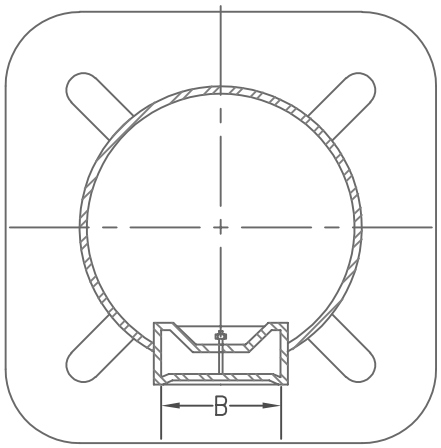

SECTION B–B

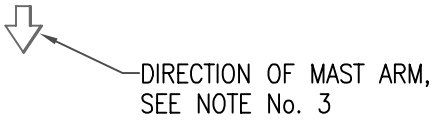

NOTES:

1. HAND HOLE COVER SHALL BE SECURED BY A BRASS MACHINE SCREW AND HOLDING CLEAT, REMOVABLE WITH A STANDARD SCREWDRIVER.
2. POLE GROUND SHALL BE 5/16" (7.9 mm) DIA. N.C. TAPPED HOLE LOCATED AS SHOWN.
3. HAND HOLE SHALL BE ORIENTED SO THAT IT IS ALIGNED WITH THE MAST ARM FOR LOWER HAND HOLE AND OPPOSITE THE MAST ARM FOR UPPER HAND HOLE
4. HAND HOLE MAY BE RECTANGULAR OR OVAL, OF DIMENSIONS SHOWN IN TABLE.
5. ALL POLES AND MAST ARMS TO BE STRAIGHT AND TRUE.

HAND HOLE DIM'S.		
POLE TYPE	A	B
TYPE "A"	5" (125 mm)	3" (75 mm)
ALL OTHERS	6–1/2" (165 mm)	4" (100 mm)

ISSUED:		STANDARD DETAIL		DETAIL NO.
7/89	CITY OF TUCSON FOUNDED 1775	HAND HOLE DETAIL	THE SEAL of PIMA COUNTY ARIZONA	T 417
REVISED: 11/04				SHEET 1 OF 1

TS4–17.DWG 12/07/00 11:09

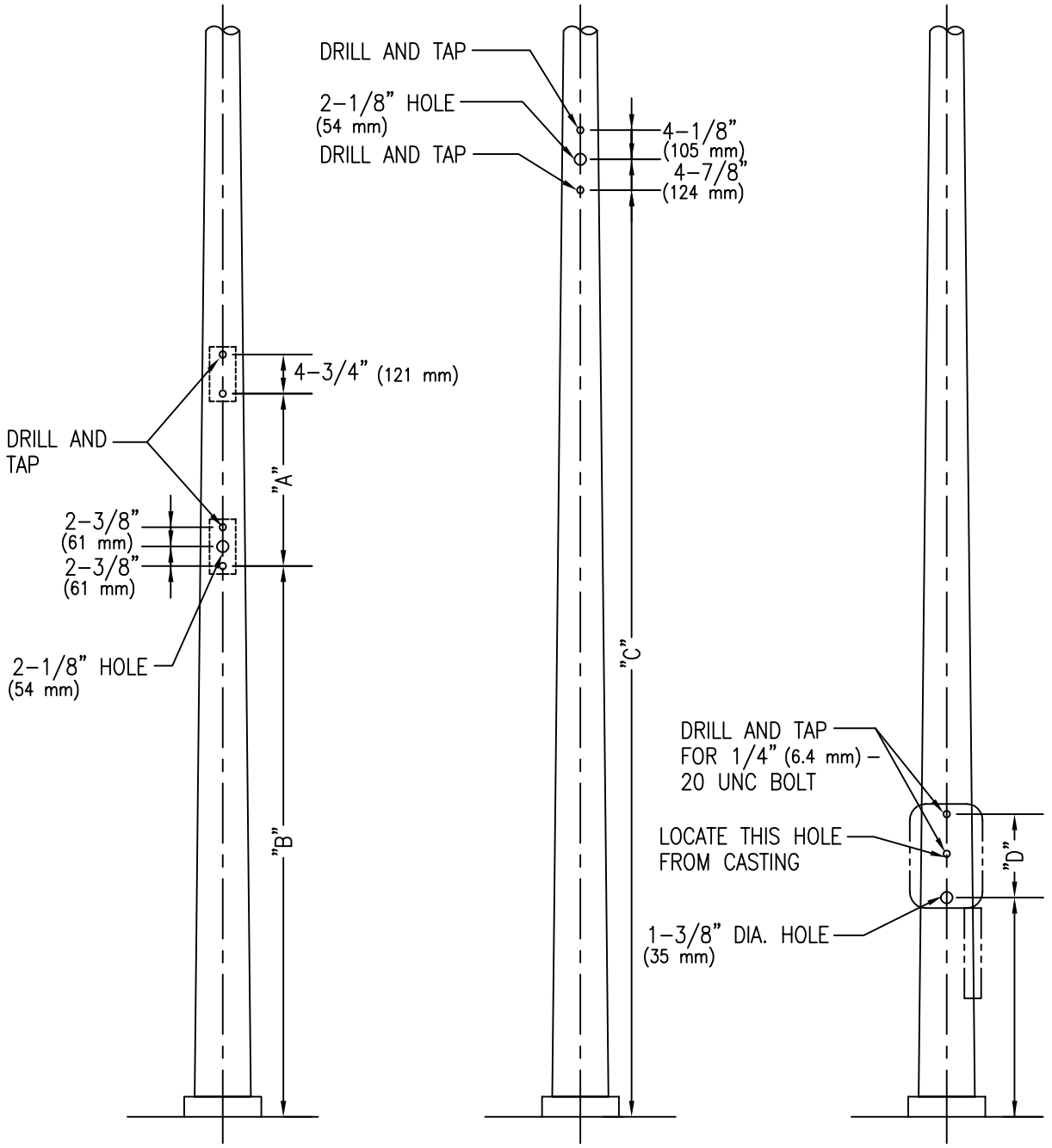

POLE PLATE DRILLING DETAIL

SIDE MOUNT DRILLING DETAIL

PUSH BUTTON DRILLING DETAIL

PUSH BUTTON TO BE INSTALLED
42" (1.07m) - 48" (1.22m)
FROM STANDING GRADE

NOTE: POLES AND MAST ARM TAPER: 0.14" (4mm) PER FOOT (305mm)

ALL POLES AND MAST ARMS TO BE STRAIGHT AND TRUE

ISSUED:		STANDARD DETAIL		DETAIL NO.
7/89		POLE DRILLING DETAIL		T 418
REVISED:				
11/04				SHEET 1 OF 2

TS4-18-1.DWG 12/07/00 11:09

NOTES:

1. DRILLING OF POLE TO BE ORIENTED ACCORDING TO POLE LAYOUT, ON PLANS.
2. WHEN TWO PEDESTRIAN PUSH BUTTONS ARE MOUNTED ON A SMALL DIAMETER POLE, THE LOWER CASTING SHALL HAVE THE BUTTON AT TOP.
3. TOP MOUNTING HOLES TO BE FIELD DRILLED IN ORDER TO ALLOW FOR MANUFACTURING VARIATIONS.
4. MOUNTING BOLTS TO BE 1/2" (13 mm) – 13 UNC X 2" (50 mm) GALVANIZED STEEL BOLTS WITH FLAT WASHER AND LOCK WASHER.
5. ALL POLES AND MAST ARMS TO BE STRAIGHT AND TRUE.

ITEM	DIM. A	DIM. B	DIM. C
PEDESTRIAN SIGNAL	19–5/8" (501 mm)	87" (1.423 m)	87" (1.423 m)
C	34–3/4" (883 mm)	125" (4.575 m)	125" (4.575 m)
J	39" (991 mm)	125" (4.575 m)	125" (4.575 m)
F	48–1/2" (1.233 m)	125" (4.575 m)	125" (4.575 m)

ITEM	DIM. D	
PUSH BUTTON		
TYPE I	11–3/8" (290 mm)	
TYPE II	9–1/4" (235 mm)	

ISSUED:		STANDARD DETAIL		DETAIL NO.
7/89		POLE DRILLING DETAIL		T 418
REVISED:				
10/02				SHEET 2 OF 2

TS4–18–2.DWG 12/07/00 11:10

NOTES:

1. ALL MATERIALS AND CONSTRUCTION SHALL CONFORM TO THE REQUIREMENTS OF THE STANDARD
2. SPECIFICATIONS.
3. THE POLE SHALL BE STEEL WITH HOT DIP GALVANIZED COATING PER ASTM A123.
4. ANCHOR BOLTS SHALL BE 1" X 36" X 4" (25 mm X 915 mm X 100 mm) WITH TWO HEX NUTS AND TWO FLAT WASHERS PER BOLT, OR PER T 450.
5. ANCHOR BOLTS SHALL PROJECT 2-3/4" (70 mm) ABOVE THE FOUNDATION.
6. CONDUIT SHALL PROJECT 2" (50 mm) ABOVE THE FOUNDATION.
7. UNSTABLE SOIL MAY REQUIRE DEEPER FOUNDATIONS.
8. SEE T 1101 FOR PUSH BUTTON DETAILS.
9. SEE T 418 FOR DRILLING DETAILS.
10. A 25' (7.62 m) COIL OF No. 4 AWG BARE COPPER CONDUCTOR SHALL BE INSTALLED BEFORE THE CONCRETE IS POURED AND CONNECTED TO AN ANCHOR BOLT.
    ALL POLES AND MAST ARMS TO BE STRAIGHT AND TRUE.
11. POLE TAPER: 0.14" (4mm) PER FOOT (305 mm).

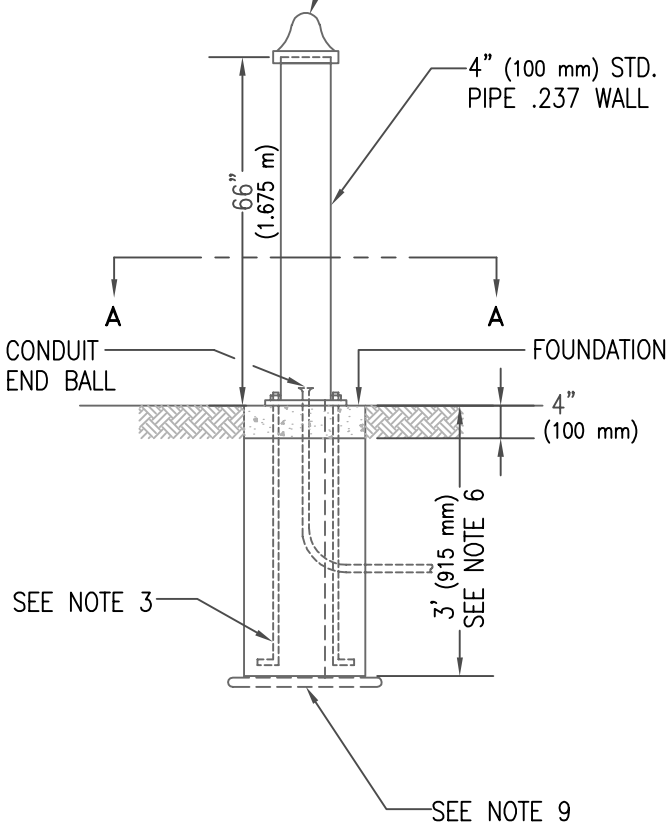

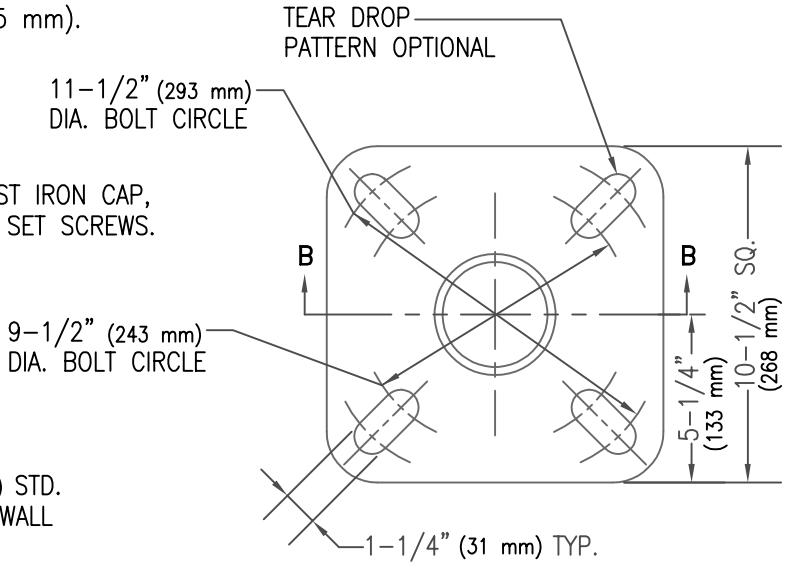

SECTION A – A

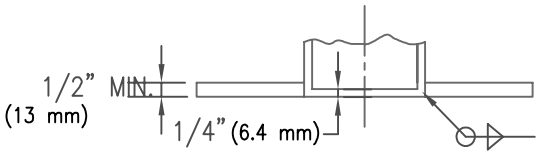

SECTION B – B

BASE PLATE DETAIL

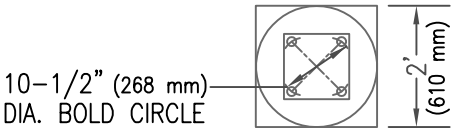

FOUNDATION PLAN

ISSUED:		STANDARD DETAIL		T.S. 4-19 DETAIL NO.
7/89		TYPE I PEDESTRIAN PUSH BUTTON POST		T 419
REVISED:				
11/04				SHEET 1 OF 1

TS4-19.DWG 12/07/00 11:11

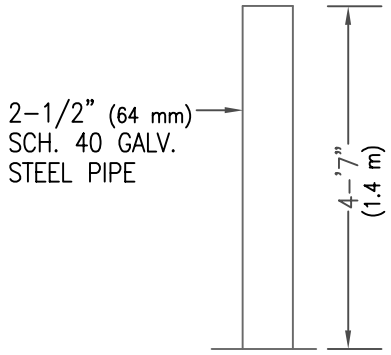

POLE AND BASE TO BE
HOT DIPPED GALVANIZED
ASTM A 123

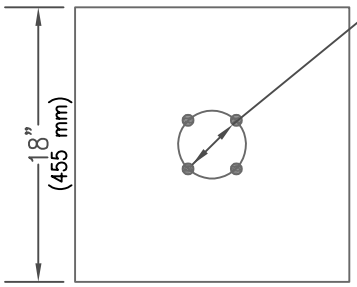

TOP

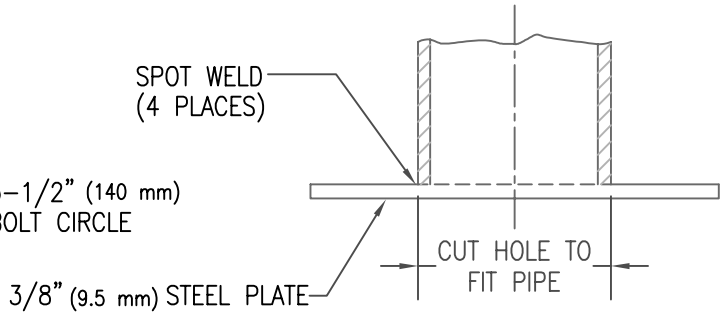

SECTION A-A

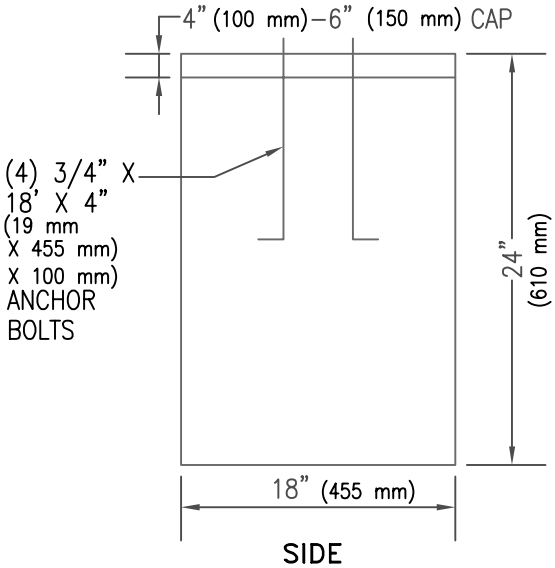

SIDE

FOUNDATION DETAILS

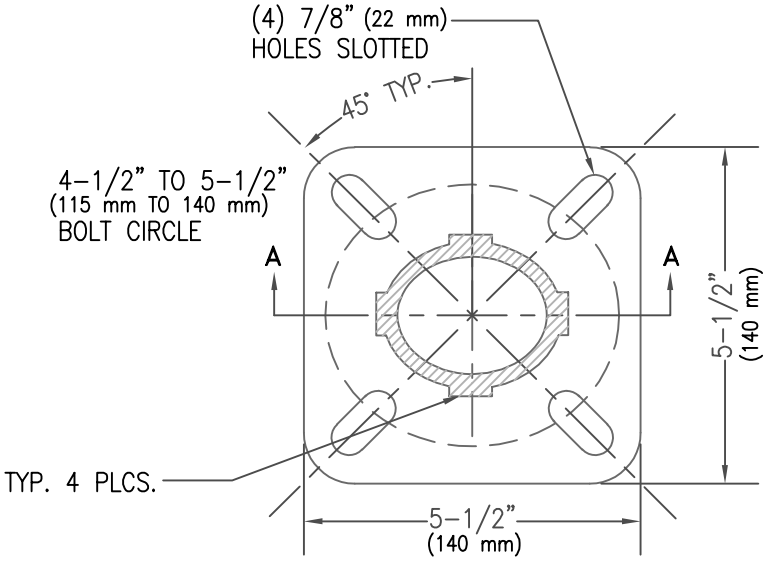

BASE DETAIL

ALL POLES AND MAST ARMS TO BE STRAIGHT AND TRUE

ISSUED:	CITY OF TUCSON FOUNDED 1775	STANDARD DETAIL	THE SEAL of PIMA COUNTY ARIZONA	T.S. 4-20 DETAIL NO.
7/89		TYPE II PEDESTRIAN PUSH BUTTON POST		T 420
REVISED:				
11/04				SHEET 1 OF 1

TS4-20.DWG 12/07/00 11:17

MAST ARM INFORMATION					
LGTH	RISE	GA	"D" MIN.	GA	"D MIN.
12' (3.66 m)	4'-3" (1.296 m)	11	4-15/16" (126 mm)	10	4-5/16" (110 mm)
15' (4.57 m)	4'-9" (1.449 m)	11	5-5/16" (135 mm)	10	4-3/4" (121 mm)
18' (5.484 m)	5'-9" (1.754 m)	11	5-13/16" (147 mm)	10	5-3/16" (132 mm)
20' (6.095 m)	5'-9" (1.754 m)	7	5-1/4" (133 mm)		

ALL POLES AND MAST ARMS TO BE STRAIGHT AND TRUE

NOTE: POLES AND MAST ARM TAPER: 0.14" (4mm) PER FOOT (305mm)

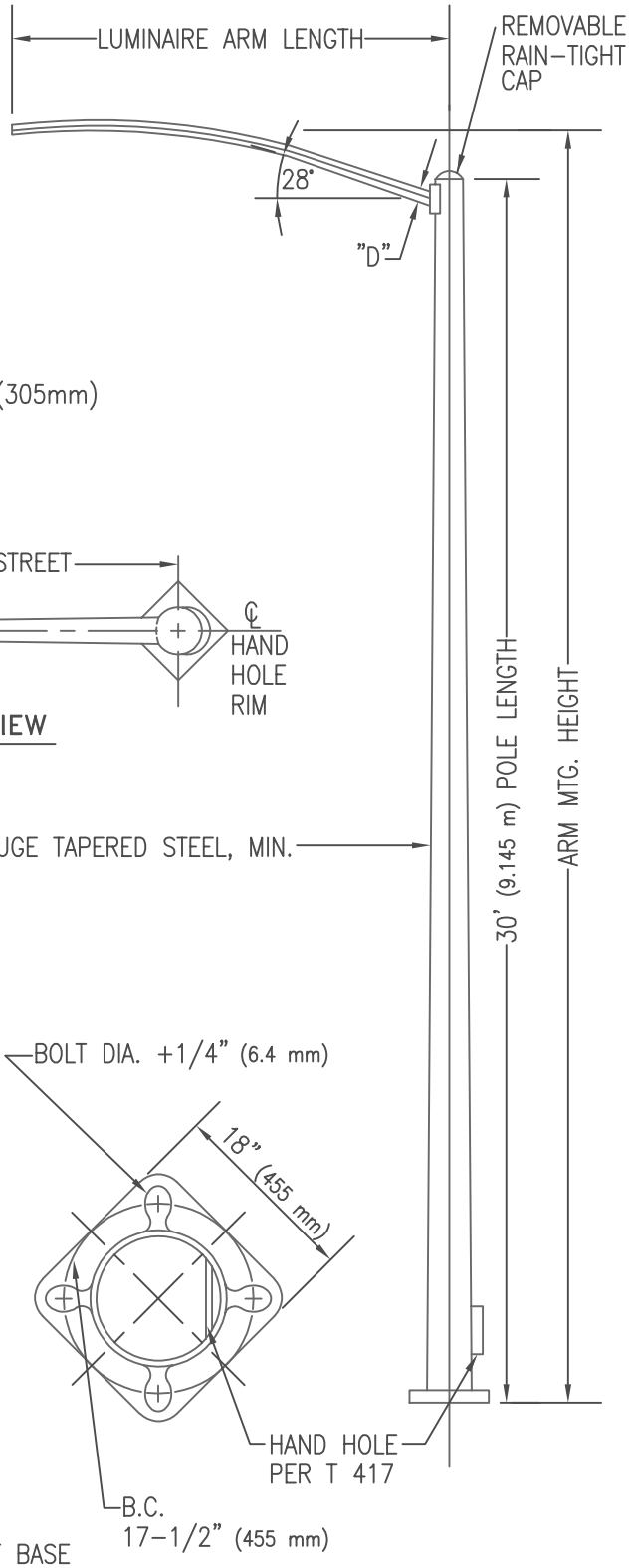

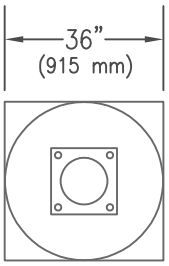

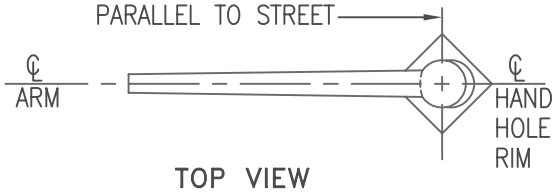

TOP VIEW

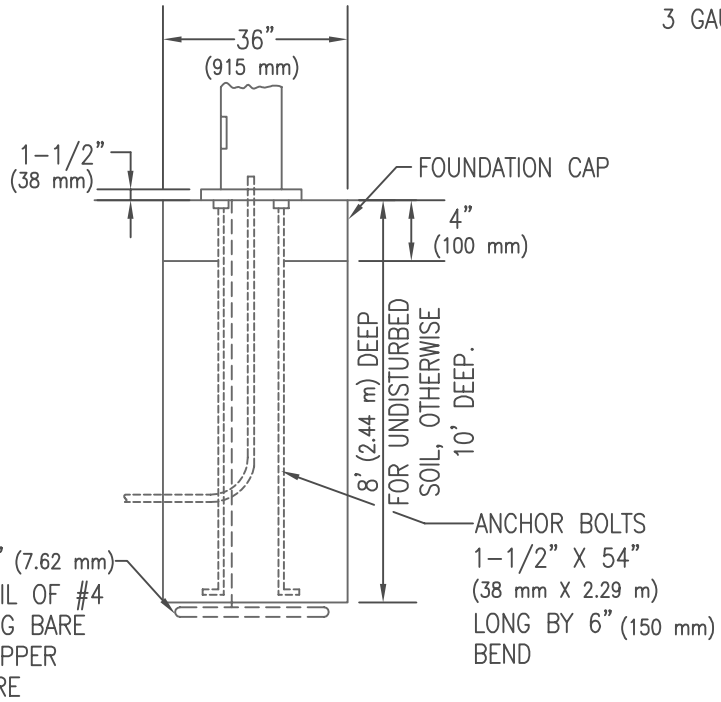

NOTE: POLE TO HAVE A 12-1/2" (318 mm) DIA. AT BASE AND 8" (205 mm) DIA. AT POLE CAP.

ISSUED:	STANDARD DETAIL	T.S. 4-21 DETAIL NO.
7/89	STRAIN POLE AND MAST ARM	T 421
REVISED: 11/04		SHEET 1 OF 1

TS4-21.DWG 12/07/00 11:18

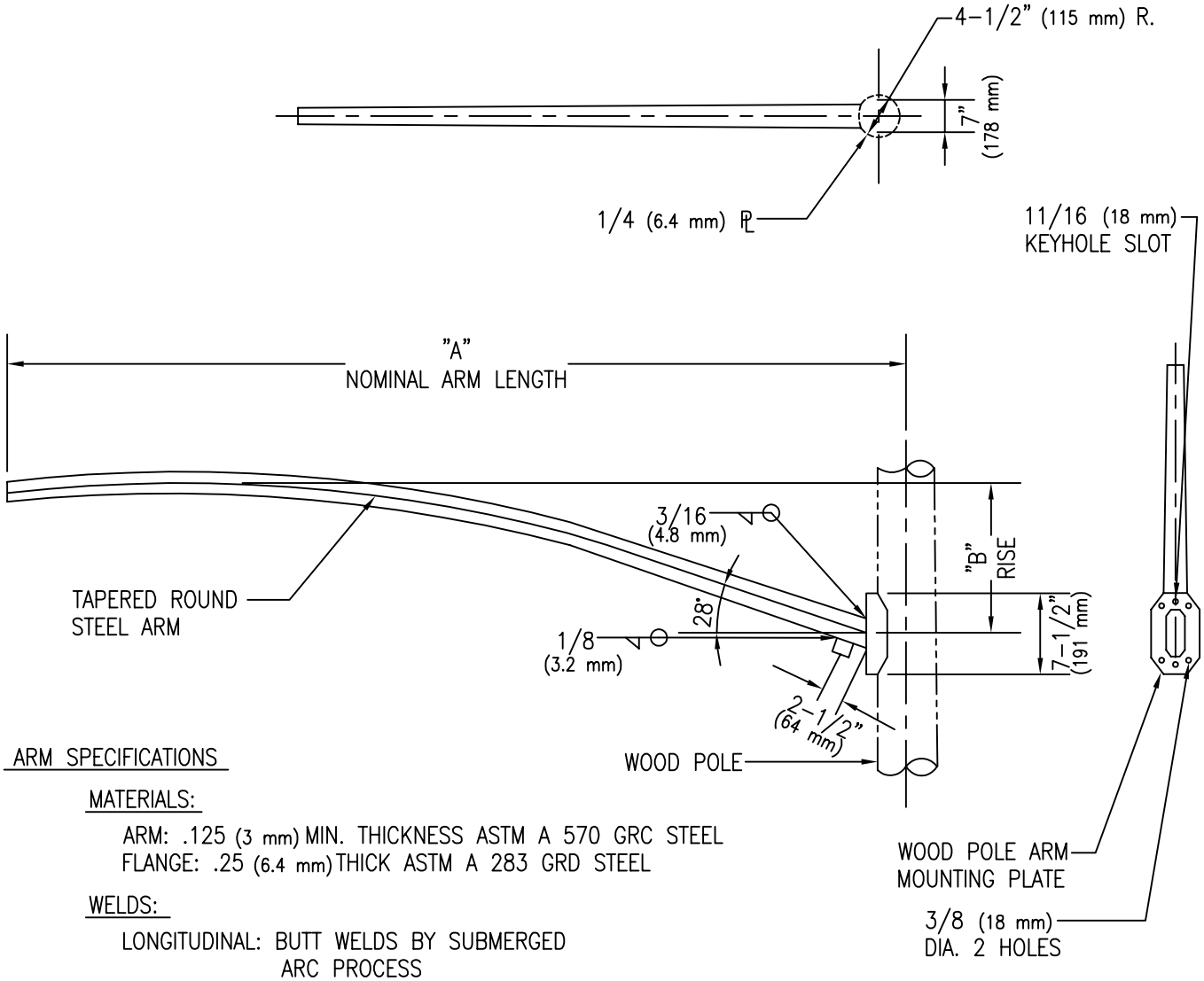

ARM SPECIFICATIONS

MATERIALS:

ARM: .125 (3 mm) MIN. THICKNESS ASTM A 570 GRC STEEL
FLANGE: .25 (6.4 mm) THICK ASTM A 283 GRD STEEL

WELDS:

LONGITUDINAL: BUTT WELDS BY SUBMERGED ARC PROCESS

FINISH:

NOT DIP GALVANIZED

A	END O.D. "BASE O.D." = THICKNESS	B
6'-0" (1.83 m)	2-3/8" X 3-3/8" X .125" (61 mm X 86 mm X 3 mm)	24" (610 mm)
8'-0" (2.44 m)	2-3/8" X 3-3/8" X .125" (61 mm X 86 mm X 3 mm)	36" (914 mm)
10'-0" (3.05 m)	2-3/8" X 3-7/8" X .125" (61 mm X 98 mm X 3 mm)	36" (914 mm)
12'-0" (3.66 m)	2-3/8" X 4-3/16" X .125" (61 mm X 107 mm X 3 mm)	51" (1.295 m)
15'-0" (4.57 m)	2-3/8" X 4-3/4" X .125" (61 mm X 121 mm X 3 mm)	57" (1.448 m)
16'-0" (4.88 m)	2-3/8" X 4-3/4" X .125" (61 mm X 121 mm X 3 mm)	57" (1.448 m)
18'-0" (5.485 m)	2-3/8" X 4-3/4" X .125" (61 mm X 121 mm X 3 mm)	69" (1.753 m)
20'-0" (6.095 m)	2-3/8" X 5-1/4" X .125" (61 mm X 133 mm X 3 mm)	69" (1.753 m)

NOTE: POLES AND MAST ARM TAPER: 0.14" (4mm) PER FOOT (305mm)
ALL POLES AND MAST ARMS TO BE STRAIGHT AND TRUE

ISSUED:	STANDARD DETAIL	DETAIL NO.
7/89	MAST ARM FOR WOOD POLE	T 430
REVISED: 11/04		SHEET 1 OF 1

TS4-30.DWG 12/07/00 11:18

NOTE TO BE USED WITH TS MAST ARMS LONGER THAN 30' (9.145 m) OR WITH SL MAST ARMS LONGER THAN 20' (6.096 m)

NOTES:

1. FOR ADDITIONAL POLE BASE AND FOUNDATION PLAN DETAIL, SEE STD. DTL. No. T 412.
2. A 20' (6.096 m) COIL OF #4 AWG BARE COPPER GROUND WIRE SHALL BE INSTALLED BEFORE THE CONCRETE IS POURED AND CONNECTED TO POLE GROUNDING SCREW IN THE HAND HOLE.

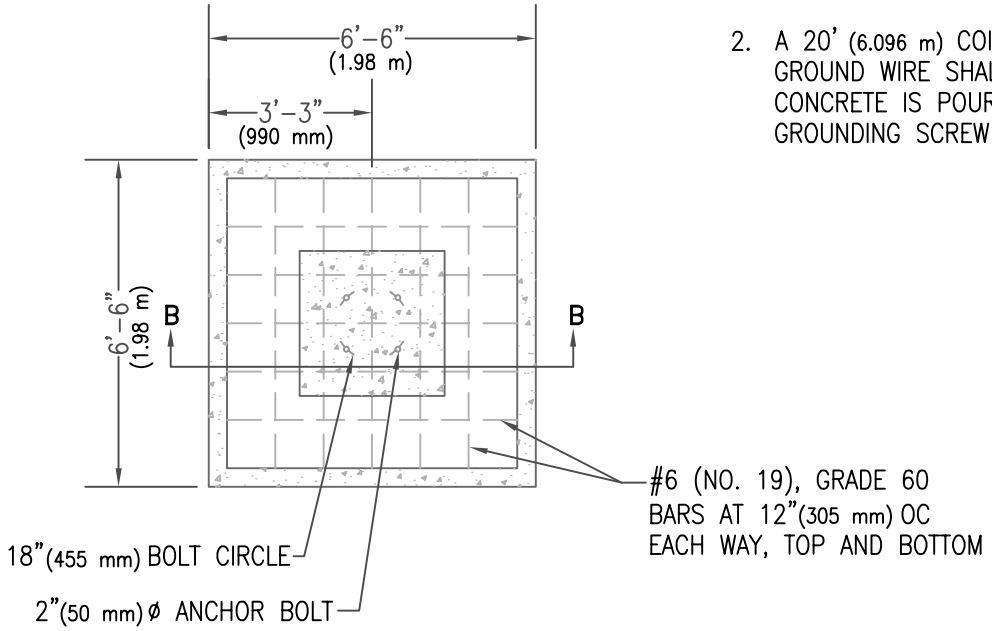

PLAN

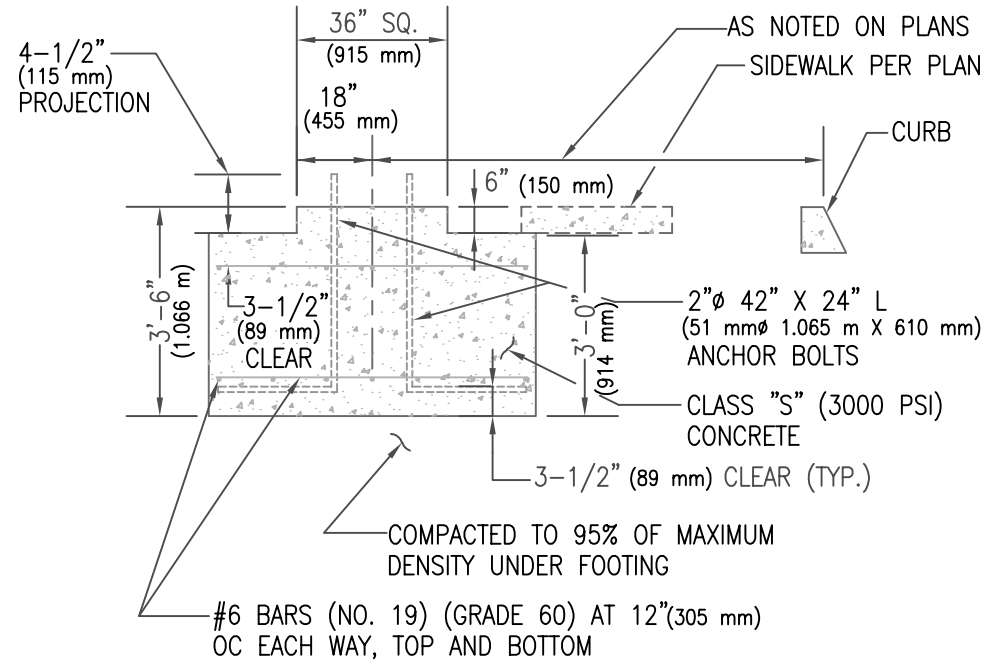

SECTION B-B

ISSUED:		STANDARD DETAIL		DETAIL NO.
7/89	CITY OF TUCSON FOUNDED 1775	SPREAD FOUNDATION (TYPE 'Q' AND 'J' POLES)	THE SEAL of PIMA COUNTY ARIZONA	T 432
REVISED: 10/02				SHEET 1 OF 1

TS4-32.DWG 12/07/00 11:19

NOTES:

1. A 20' (6.095 m) COIL OF #4 AWG BARE COPPER GROUND WIRE SHALL BE INSTALELD BEFORE THE CONCRETE IS POURED AND CONNECTED TO THE GROUNDING SCREW IN THE HANDHOLE

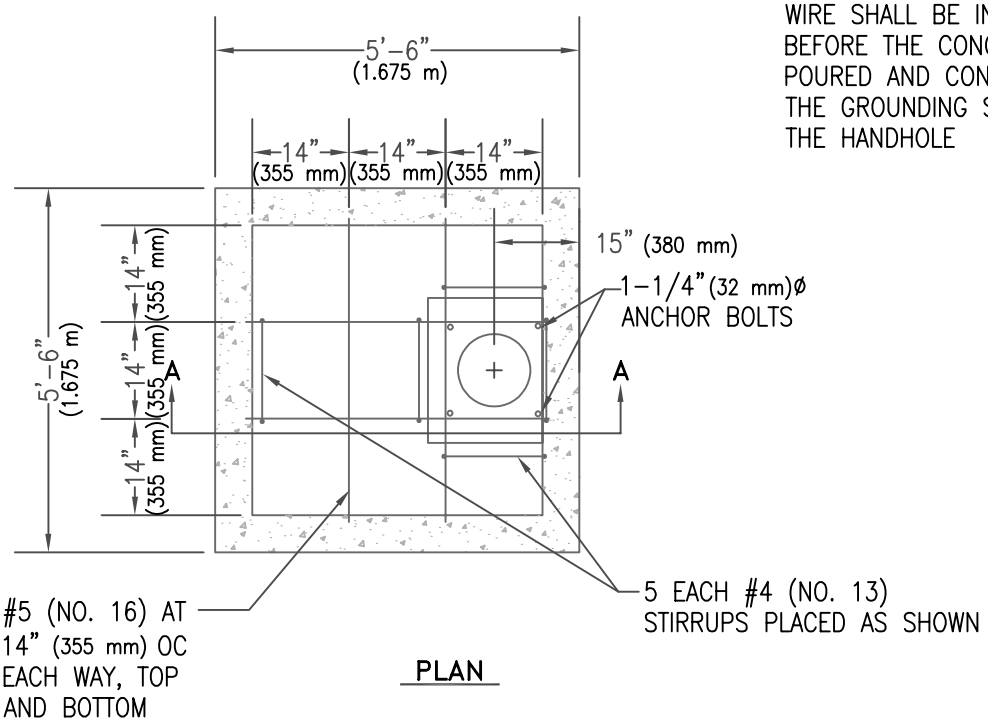

PLAN

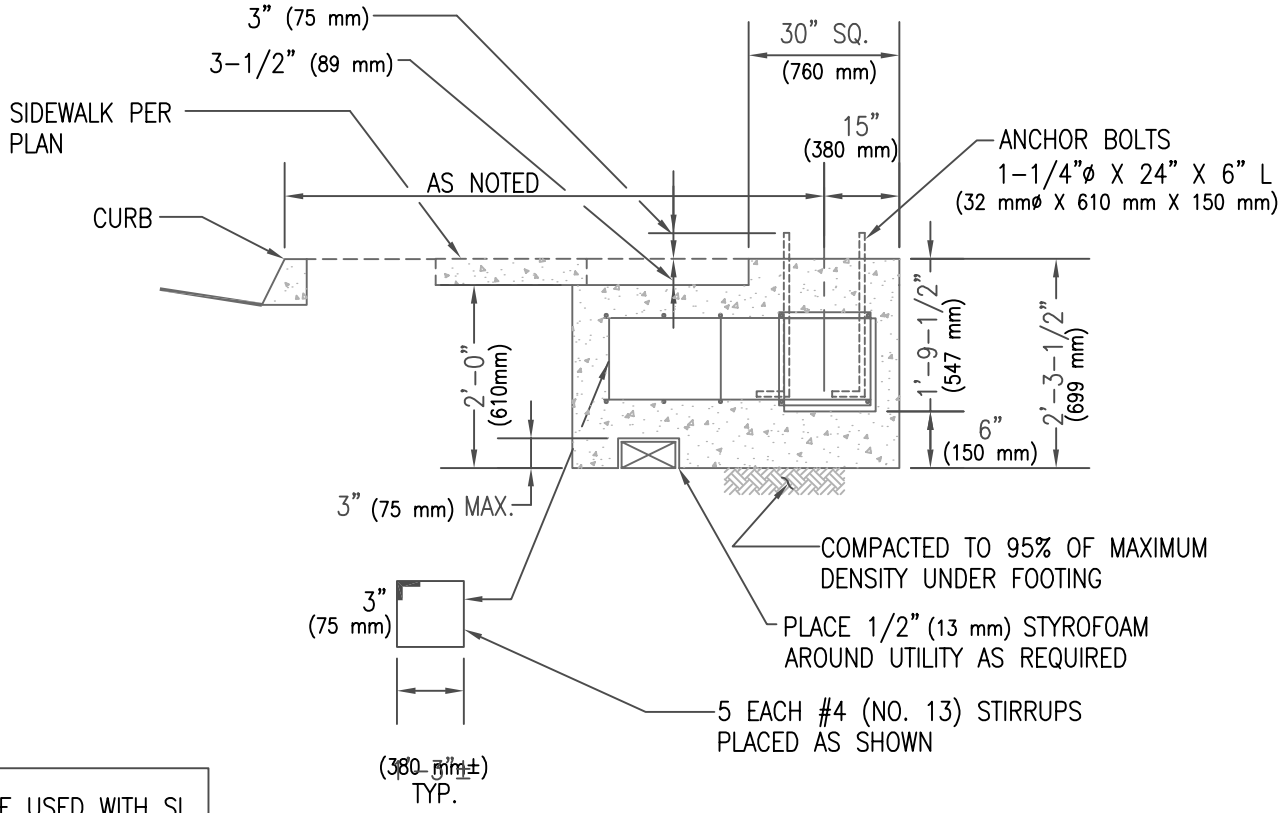

SECTION A-A

NOT TO BE USED WITH SL MAST ARMS LONGER THAN 20' (6.095 m)

ISSUED:		STANDARD DETAIL		DETAIL NO.
7/89		SPREAD FOUNDATION (TYPE 'E','F','G' 1 AND 2 POLES)		T 433
REVISED:				SHEET 1 OF 1
10/02				

TS4-33.DWG 12/07/00 11:19

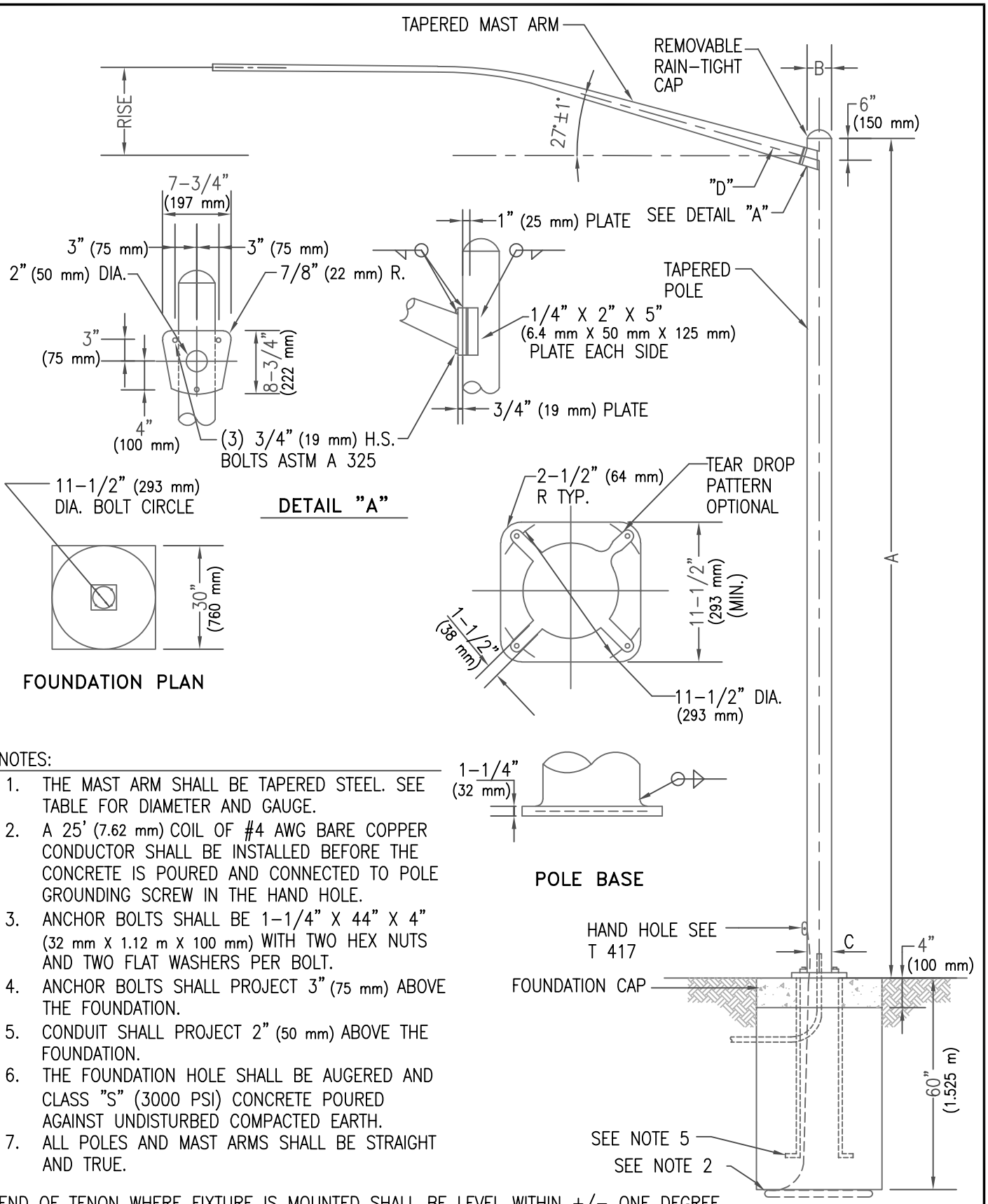

NOTES:

1. THE MAST ARM SHALL BE TAPERED STEEL. SEE TABLE FOR DIAMETER AND GAUGE.
2. A 25' (7.62 mm) COIL OF #4 AWG BARE COPPER CONDUCTOR SHALL BE INSTALLED BEFORE THE CONCRETE IS POURED AND CONNECTED TO POLE GROUNDING SCREW IN THE HAND HOLE.
3. ANCHOR BOLTS SHALL BE 1-1/4" X 44" X 4" (32 mm X 1.12 m X 100 mm) WITH TWO HEX NUTS AND TWO FLAT WASHERS PER BOLT.
4. ANCHOR BOLTS SHALL PROJECT 3" (75 mm) ABOVE THE FOUNDATION.
5. CONDUIT SHALL PROJECT 2" (50 mm) ABOVE THE FOUNDATION.
6. THE FOUNDATION HOLE SHALL BE AUGERED AND CLASS "S" (3000 PSI) CONCRETE POURED AGAINST UNDISTURBED COMPACTED EARTH.
7. ALL POLES AND MAST ARMS SHALL BE STRAIGHT AND TRUE.

END OF TENON WHERE FIXTURE IS MOUNTED SHALL BE LEVEL WITHIN +/- ONE DEGREE
NOTE: POLES AND MAST ARM TAPER: 0.14" (4mm) PER FOOT (305mm)
ALL POLES AND MAST ARMS TO BE STRAIGHT AND TRUE

ISSUED:	STANDARD DETAIL	T.S. 4-44 DETAIL NO.
7/89	TYPE 1 STREET LIGHT POLE	T 444
REVISED: 11/04		SHEET 1 OF 2

TS4-44-1.DWG 12/07/00 11:21

POLE SHAFT DATA

ARM LENGTH	CONSTRUCTION	"A"	"B"	"C"	GAUGE
6'–20' (1.83 m–6.095 m)	SINGLE ARM	30' (9.145 m)	3–7/8" (98 mm)	8" (205 mm)	10
6'–20' (1.83 m–6.095 m)	TWIN ARM	30' (9.145 m)	3–7/8" (98 mm)	8" (205 mm)	10
6'–20' (1.83 m–6.095 m)	SINGLE ARM	35' (10.67 m)	3–7/8" (98 mm)	8–11/16" (227 mm)	10
6'–20' (1.83 m–6.095 m)	TWIN ARM	35' (10.67 m)	3–7/8" (98 mm)	8–11/16" (227 mm)	7

MAST ARM INFORMATION

LENGTH	RISE	GAUGE	"D" MIN.	GAUGE	"D" MIN.
6' (1.83 m)	2'–0" (610 mm)	11	3–1/4" (82 mm)	10	3–3/8" (86 mm)
8' (2.44 m)	2'–6" (760 mm)	11	3–1/2" (89 mm)	10	3–5/8" (92 mm)
10' (3.05 m)	3'–8" (1.118 m)	11	3–13/16" (96 mm)	10	3–7/8" (98 mm)
12' (3.66 m)	4'–3" (1.296 m)	11	4–1/16" (104 mm)	10	4–5/16" (110 mm)
15' (4.57 m)	4'–9" (1.45 m)	11	4–1/4" (108 mm)	10	4–3/4" (121 mm)
18' (5.485 m)	5'–9" (1.755 m)	11	5–3/4" (146 mm)	10	5–3/16" (132 mm)
20' (6.095 m)	5'–9" (1.755 m)	7	5–1/4" (133 mm)	7	5–1/4" (133 mm)

MINIMUM POLE SPECIFICATIONS

MATERIAL

BASE PLATE AND FLANGES: ASTM. A–36 STEEL.
SHAFT: STEEL OF 48,000 P.S.I. MINIMUM YIELD AFTER FABRICATION.
PIPE: ASTM A–53
ANCHOR BOLTS: ASTM A–307

WELDS: (ALL BUTT WELDS TO BE GROUND FLUSH WITH BASE METAL)

BASE PLATE AND FLANGES: ASTM. A–36 STEEL.
SHAFT: STEEL OF 48,000 P.S.I. MINIMUM YIELD AFTER FABRICATION.
PIPE: ASTM A–53
ANCHOR BOLTS: ASTM A–307

FINISH HOT DIP GALVANIZED AS PER ASTM A123

POLES SHALL BE DESIGNED FOR 80 MPH WIND AASHTO WITH 1.2 SQ. FT. (30 mm) EPA AND 53 LBS. FIXTURES.

POLE SHALL BE SUPPLIED WITH 6–1/2" X 4" (165 mm X 100 mm) HANDHOLE, HANDHOLE COVER, POLE TOP, AND 2–PIECE REMOVABLE BASE COVER.

ALL POLES AND MAST ARMS TO BE STRAIGHT AND TRUE.

ISSUED:		STANDARD DETAIL		DETAIL NO.
7/89	CITY OF TUCSON FOUNDED 1775	TYPE 1 STREET LIGHT POLE	THE SEAL of PIMA COUNTY ARIZONA	T 444
REVISED: 10/02				SHEET 2 OF 2

TS4–44–2.DWG 12/07/00 11:21

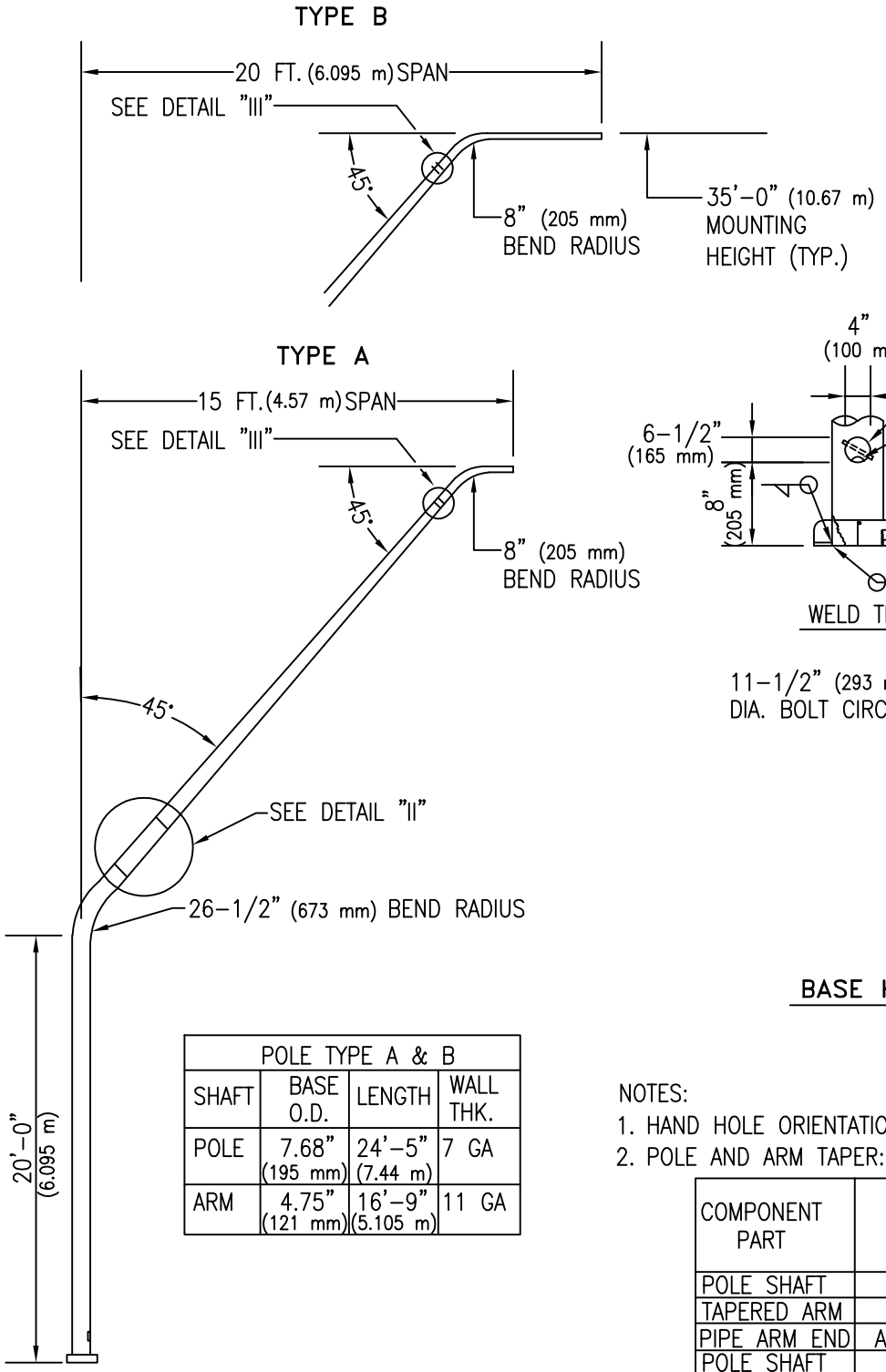

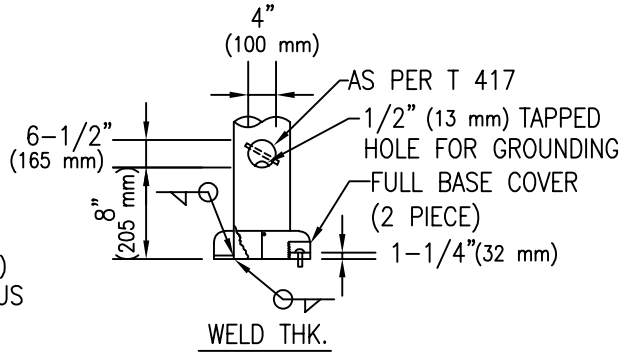

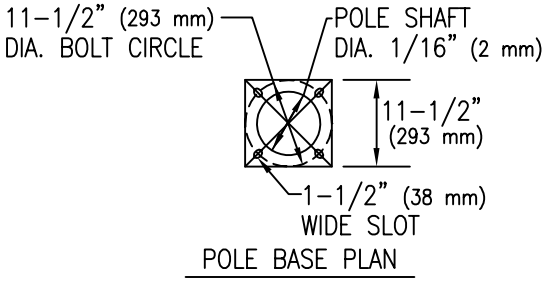

BASE HAND HOLE DETAIL

POLE TYPE A & B			
SHAFT	BASE O.D.	LENGTH	WALL THK.
POLE	7.68" (195 mm)	24'-5" (7.44 m)	7 GA
ARM	4.75" (121 mm)	16'-9" (5.105 m)	11 GA

NOTES:

1. HAND HOLE ORIENTATION: 0° TO ARM
2. POLE AND ARM TAPER: .14" (4 mm) PER FOOT (305 mm).

COMPONENT PART	ASTM	MIN. YIELD (KSI)
POLE SHAFT	A 395 GR.A	35
TAPERED ARM	A 395 GR.A	35
PIPE ARM END	A 313 OR EQUIV.	35
POLE SHAFT	A 36	35
POLE SHAFT	A 301	35
POLE SHAFT	A 123 SHAFTS A 133 ACCESSORIES	M.A.

NOTE: END OF TENON WHERE FIXTURE IS MOUNTED SHALL BE LEVEL WITHIN +/- ONE DEGREE

ISSUED:	STANDARD DETAIL	T.S. 4-44 DETAIL NO.
7/89	TYPE 2 STREET LIGHT POLE	T 445
REVISED: 11/04		SHEET 1 OF 2

TS4-45-1.DWG 12/07/00 11:24

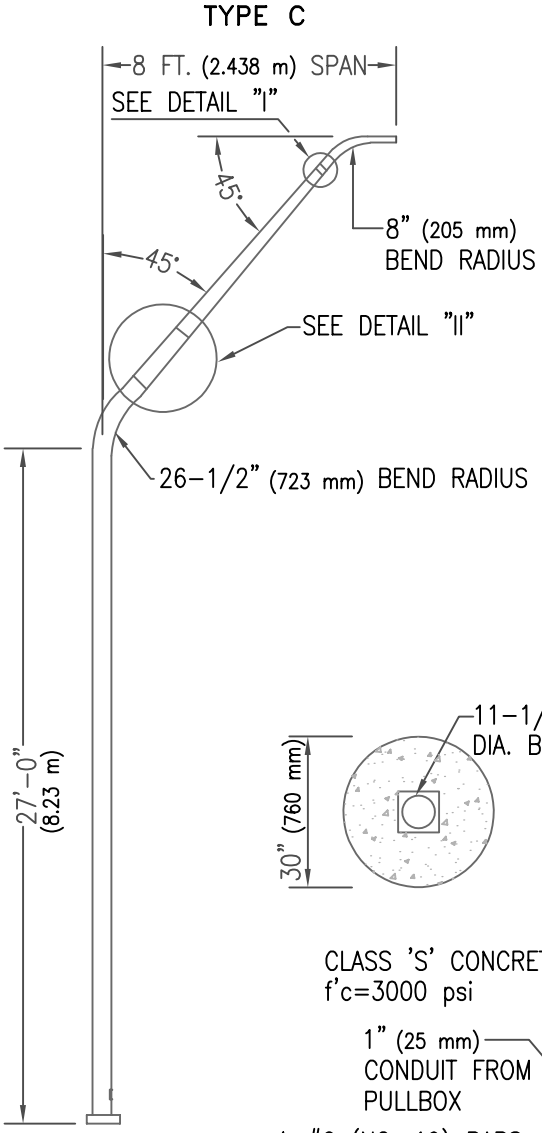

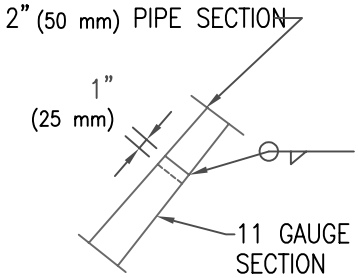

DETAIL "I"

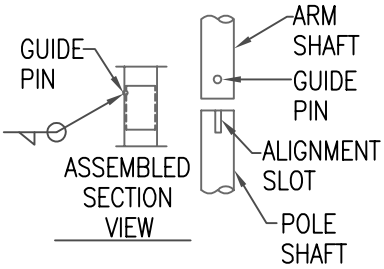

DETAIL "II"

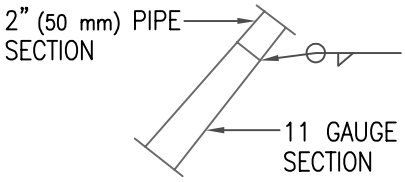

DETAIL "III"

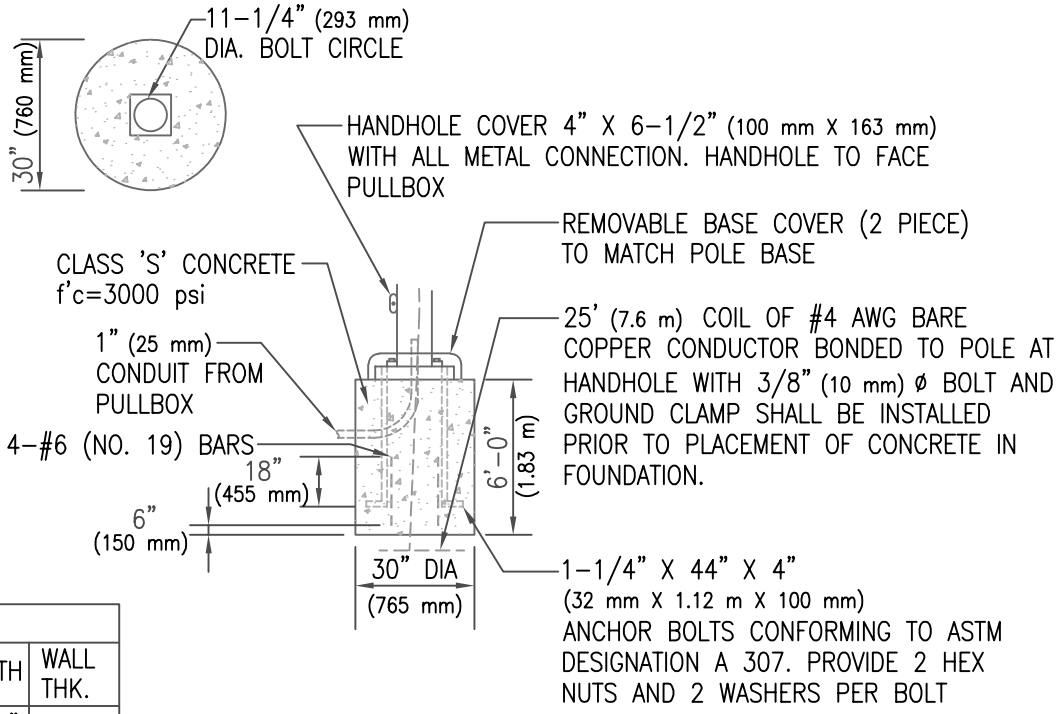

POLE FOUNDATION (TYP)

POLE TYPE C			
SHAFT	BASE O.D.	LENGTH	WALL THK.
POLE	7.62" (194 mm)	31'-2" (9.5 m)	7 GA
ARM	3.72" (94 mm)	7'-5" (2.26 m)	11 GA

NOTE: CENTER OF POLE FOUNDATION TYPICALLY 8'-6" (2.59 m) FROM FACE OF CURB FOR TYPE 'A' & 'B'. CONTRACTOR SHALL VERIFY LOCATION WITH INSPECTOR PRIOR TO EXCAVATING FOUNDATION.

ISSUED:	STANDARD DETAIL	DETAIL NO.
7/89	TYPE 2 STREET LIGHT POLE	T 445
REVISED: 11/04		SHEET 2 OF 2

TS4-45-2.DWG 12/07/00 11:26

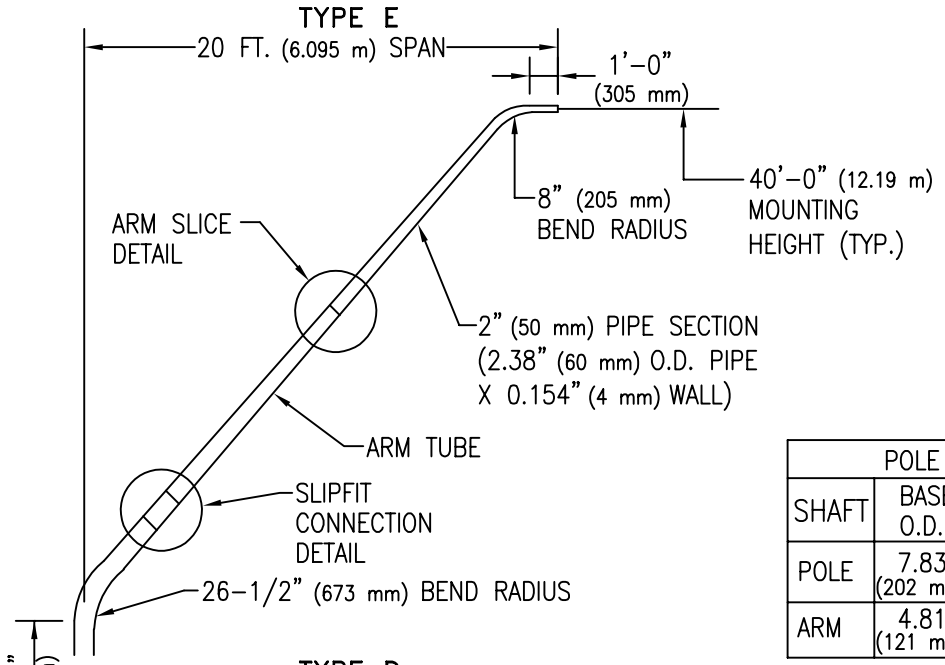

POLE TYPE E			
SHAFT	BASE O.D.	LENGTH	GAUGE
POLE	7.83" (202 mm)	25.00' (7.62 m)	7 GA
ARM	4.81" (121 mm)	17.17' (2.26 m)	11 GA

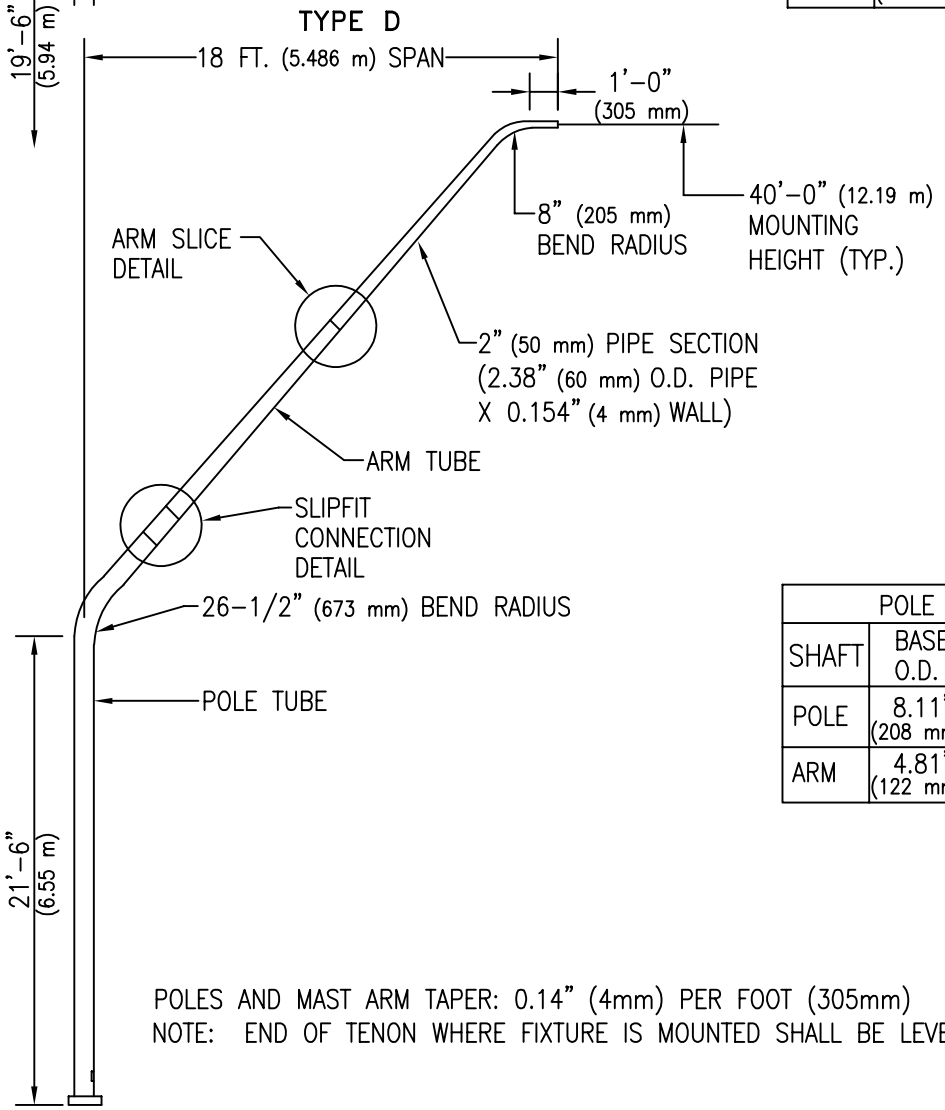

POLE TYPE D			
SHAFT	BASE O.D.	LENGTH	GAUGE
POLE	8.11" (208 mm)	27.00' (8.23 m)	7 GA
ARM	4.81" (122 mm)	17.17' (5.23 m)	11 GA

POLES AND MAST ARM TAPER: 0.14" (4mm) PER FOOT (305mm)
NOTE: END OF TENON WHERE FIXTURE IS MOUNTED SHALL BE LEVEL WITHIN +/- ONE DEGREE

ISSUED:	STANDARD DETAIL	T.S. 4-46 DETAIL NO.
7/95	STREET LIGHT POLE TYPE D AND E	T 446
REVISED: 11/04		SHEET 1 OF 2

TS4-46-1.DWG 12/07/00 11:53

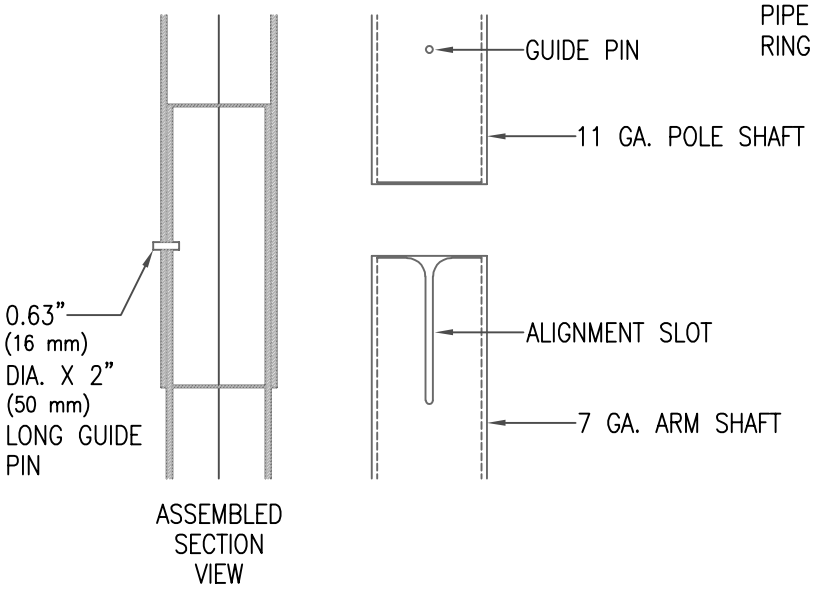

SLIPFIT CONNECTION DETAIL

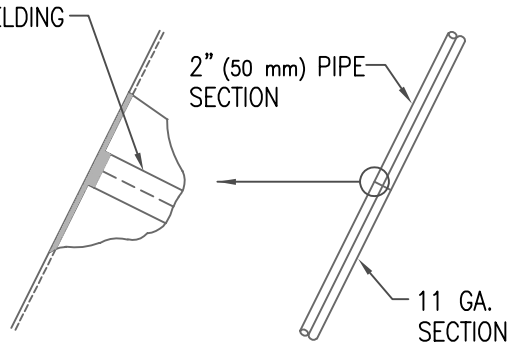

ARM SPLICE DETAIL

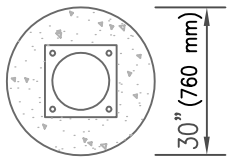

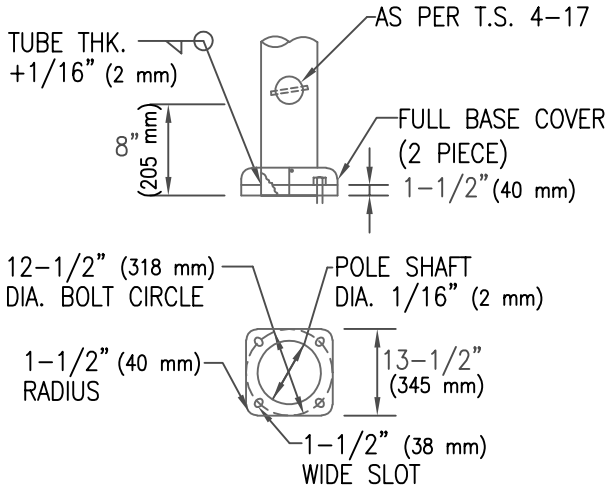

BASE & HANDHOLE DETAIL

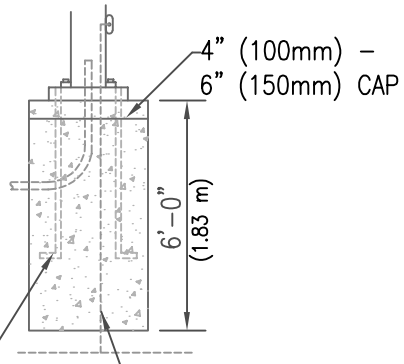

1-1/4" X 44" X 4"
(32 mm X 1.12 m X 100 mm)
ANCHOR BOLTS CONFORMING
TO ASTM DESIGNATION: A-307

25' (7.6m) COIL OF NO. 4 AWG BARE COPPER CONDUCTOR SHALL BE INSTALLED PRIOR TO PLACEMENT OF CONCRETE IN FOUNDATION. CONNECT CONDUCTOR TO THE POLE'S GROUNDING SCREW IN THE HAND HOLE.

POLE FOUNDATION (TYP)

ISSUED:		STANDARD DETAIL		DETAIL NO.
7/95	CITY OF TUCSON FOUNDED 1775	STREET LIGHT POLE TYPE D AND E	THE SEAL of PIMA COUNTY ARIZONA	T 446
REVISED:				
10/02				SHEET 2 OF 2

TS4-46-2.DWG 12/07/00 11:54

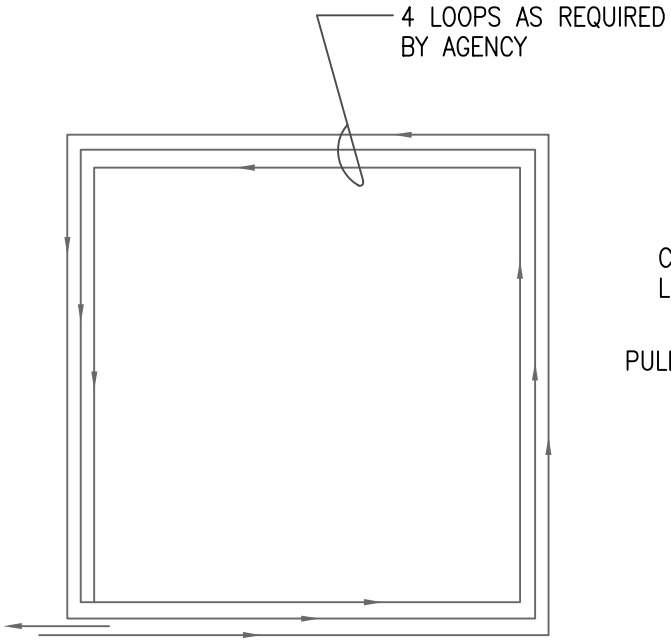

WIRE LAYOUT

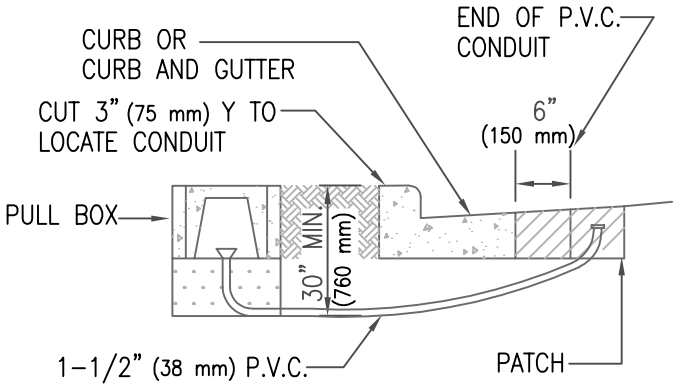

WITH CURB AND GUTTER

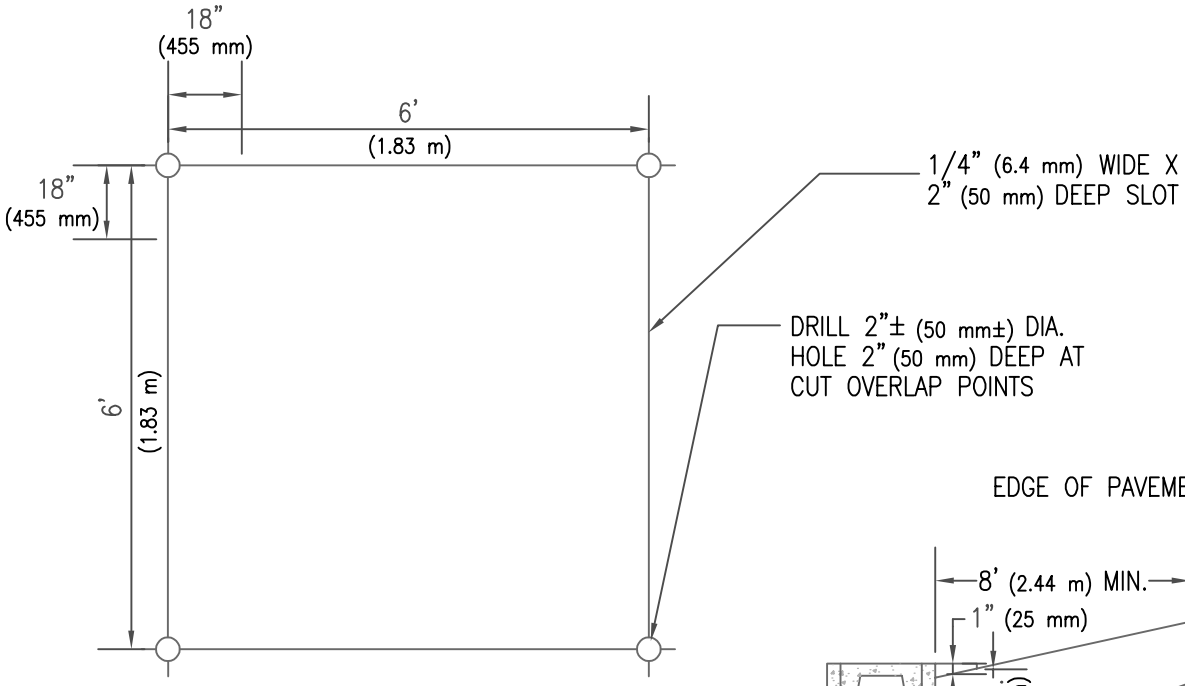

SAWCUT LAYOUT

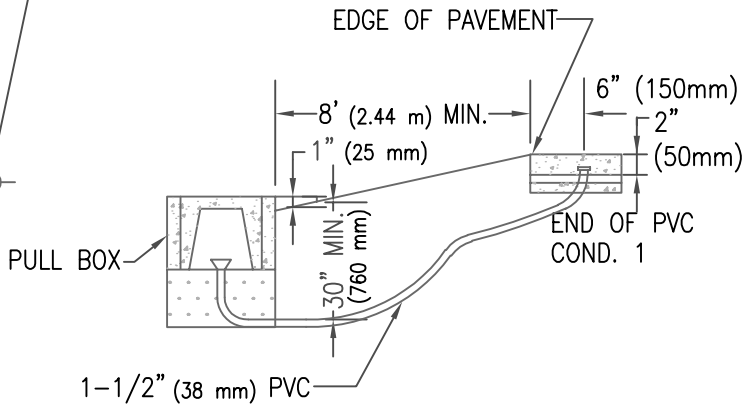

WITHOUT CURB AND GUTTER

ISSUED:		STANDARD DETAIL		DETAIL NO.
7/89	CITY OF TUCSON FOUNDED 1775	6X6 LOOP DETECTOR	THE SEAL of PIMA COUNTY ARIZONA	T 710
REVISED:				
10/02				SHEET 1 OF 2

TS7-10-1.DWG 12/07/00 11:54

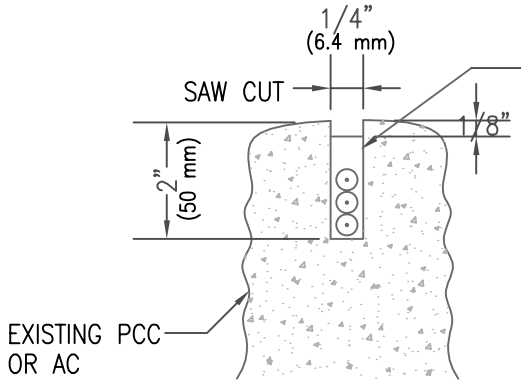

DETAIL 1

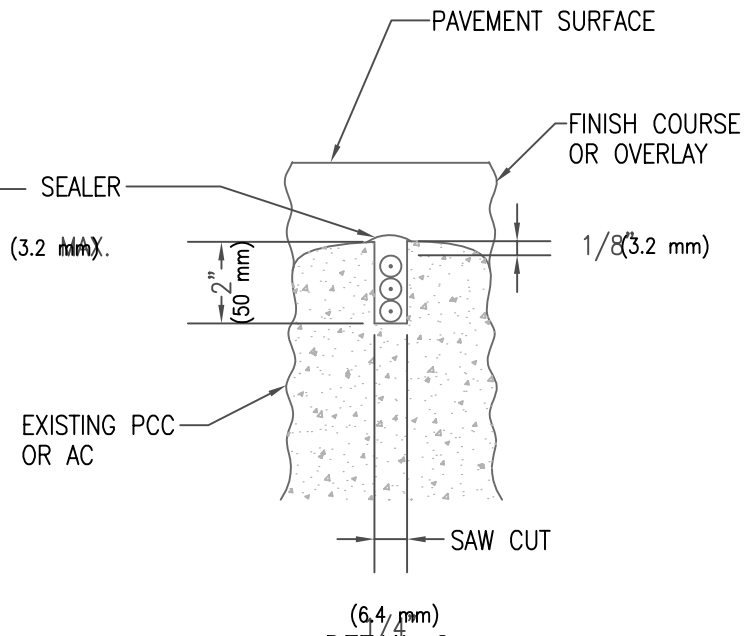

DETAIL 2

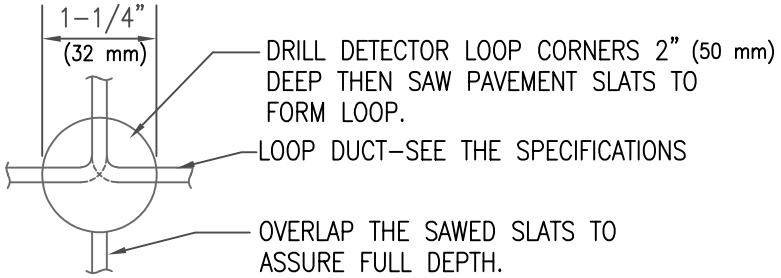

DRILLING DETAIL

NOTES:

1. ONE LOOP DETECTOR SHALL BE INSTALLED PER LANE AND IT SHALL BE LOCATED IN THE CENTER OF THE LANE.
2. LOOPS SHALL BE INSTALLED IN ACCORDANCE WITH THE REQUIREMENTS OF DETAIL 1 WHEN THERE IS TO BE NO ADDITIONAL SURFACING.
3. LOOPS SHALL BE INSTALLED IN ACCORDANCE WITH THE REQUIREMENTS OF DETAIL 2 WHEN THERE IS TO BE AN OVERLAY, OR FINISH COURSE.

ISSUED:		STANDARD DETAIL		DETAIL NO.
7/89		6X6 LOOP DETECTOR		T 710
REVISED:				SHEET 2 OF 2
10/02				

TS7-10-2.DWG 12/07/00 12:02

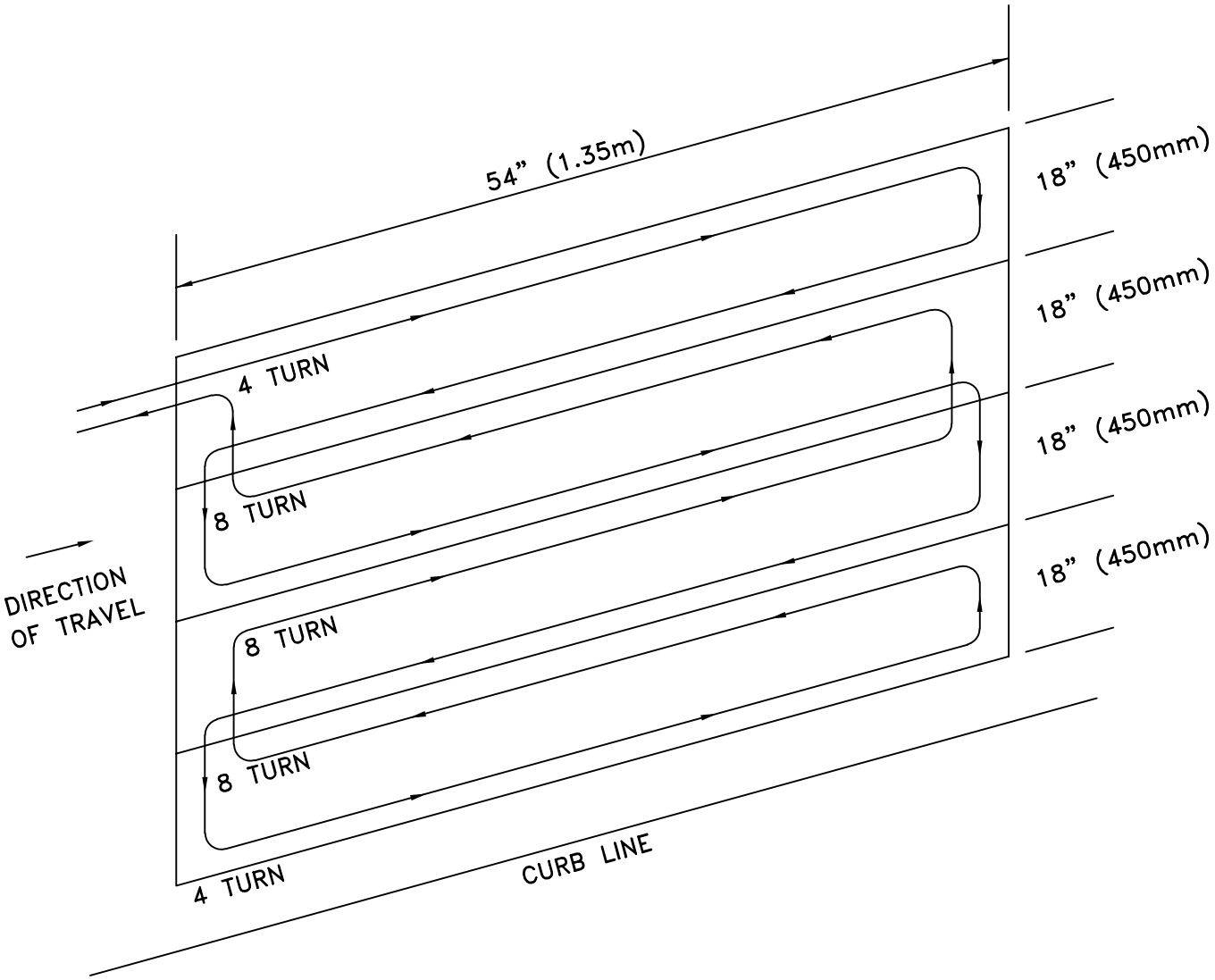

NOTES:

1. SAW CUT DEPTH SHOULD BE 2" – 3" (50mm – 75mm)

ISSUED:		STANDARD DETAIL		DETAIL NO.
7/89		BICYCLE LANE DETECTOR LOOP		T 711
REVISED:				
11/04				SHEET 1 OF 1

TS7-11.DWG 12/07/00 11:55

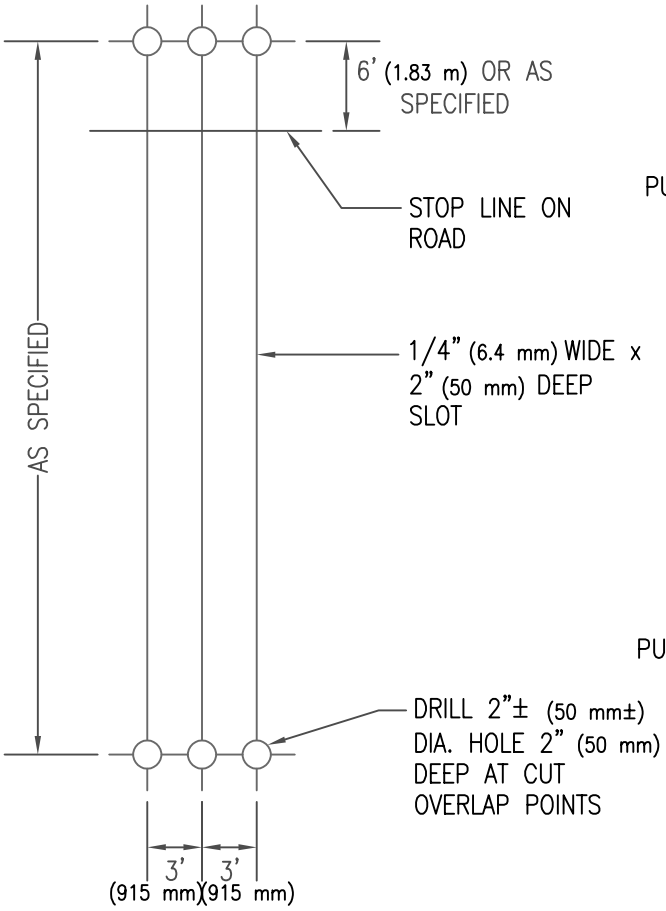

SAWCUT LAYOUT

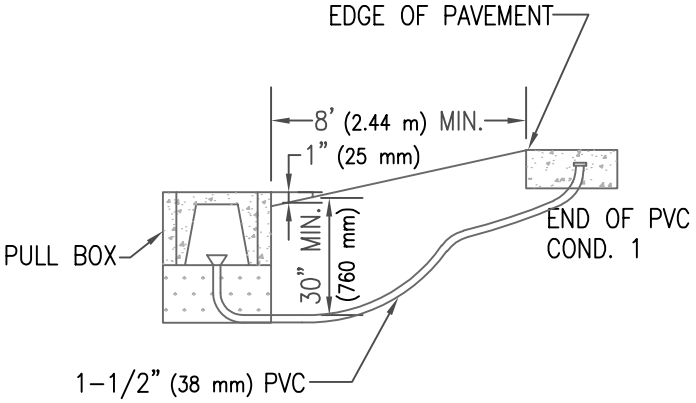

WITHOUT CURB AND GUTTER

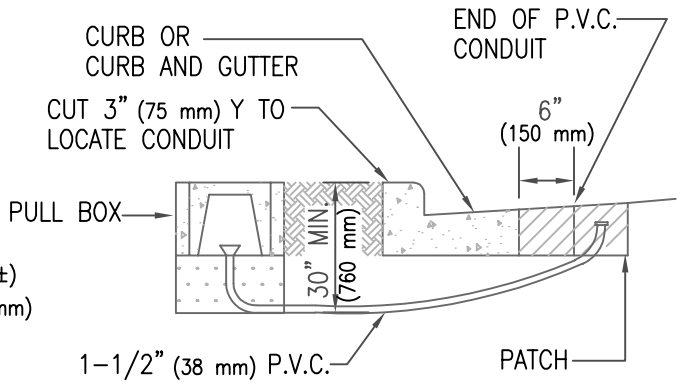

WITH CURB AND GUTTER

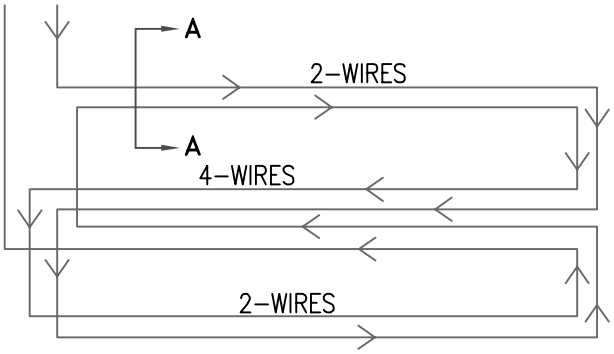

WIRING DIAGRAM FOR QUADRUPLE DETECTOR (2 TURNS)

ISSUED:		STANDARD DETAIL		DETAIL NO.
7/89		PRESENCE LOOP DETECTOR		T 712
REVISED:				
10/02				SHEET 1 OF 2

TS7-12-1.DWG 12/07/00 11:56

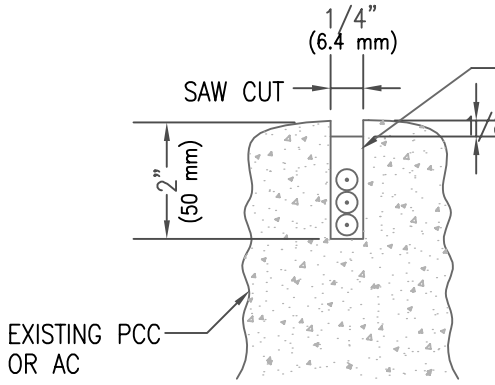

DETAIL 1

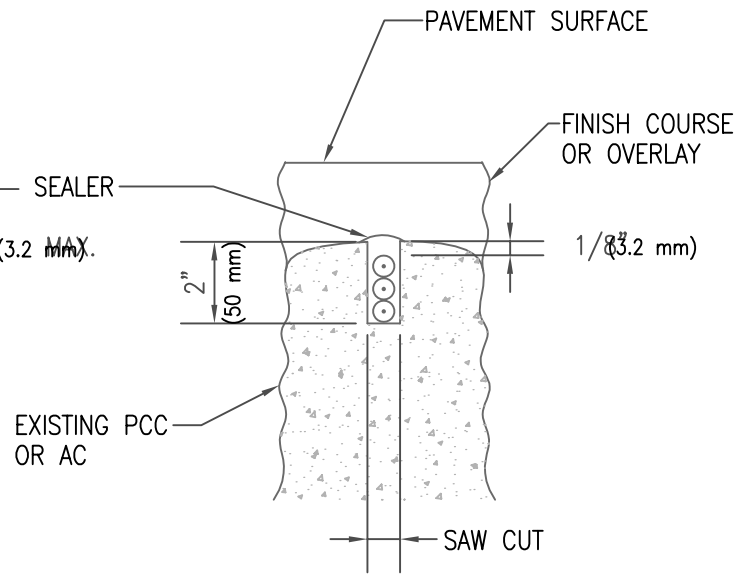

DETAIL 2

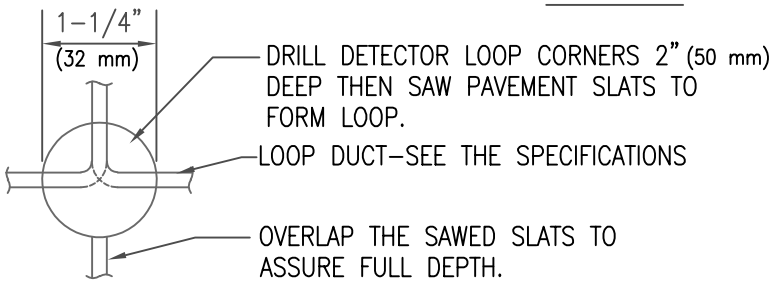

DRILLING DETAIL

NOTES:

1. LOOP SHALL BE LOCATED IN THE CENTER OF THE LANE.
2. LOOPS SHALL BE INSTALLED IN ACCORDANCE WITH THE REQUIREMENTS OF DETAIL 1 WHEN THERE IS TO BE NO ADDITIONAL SURFACING.
3. LOOPS SHALL BE INSTALLED IN ACCORDANCE WITH THE REQUIREMENTS OF DETAIL 2 WHEN THERE IS TO BE AN OVERLAY OR FINISH COURSE.
4. ALTERNATE SAW CUT TO CUT CORNERS WITH SAW CUT WHEN APPROVED BY THE ENGINEER. SEE STD. DET. T 710.

ISSUED:		STANDARD DETAIL		DETAIL NO.
7/89		PRESENCE LOOP DETECTOR		T 712
REVISED:				SHEET 2 OF 2
10/02				

TS7-12-2.DWG 12/07/00 11:56

NOTE:

UNDERGROUND TAPE MAY BE REQUIRED TO BE PLACED AT A DEEPER DEPTH, AS DIRECTED BY THE ENGINEER.

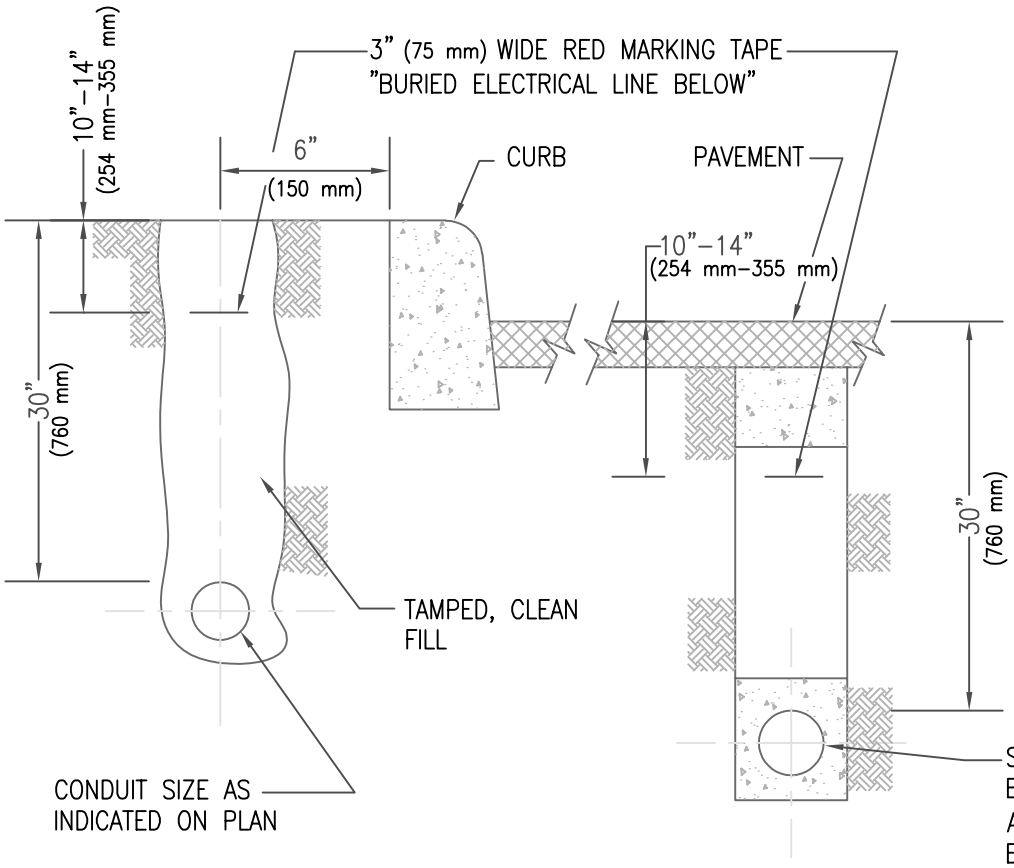

STREET CROSSING SHALL BE A CONDUIT ENCASED IN A 6" (150 mm) CONCRETE ENVELOPE WITH A TYPE 3 UTILITY TRENCH PATCH DETAIL 216.

ENCASEMENT SHALL HAVE A MIN. OF 3" (75 mm) OF CONCRETE ON ALL SIDES OF CONDUIT (S).

ISSUED:		STANDARD DETAIL		DETAIL NO.
7/89		UNDERGROUND CONDUIT		T 713
REVISED:				
11/04				SHEET 1 OF 1

TS7-13.DWG 12/07/00 12:01

LOOP INSTALLATION SHALL BE ACCORDING TO STANDARD DETAIL T 710
EXCEPT AS NOTED HEREIN.

1. ALL LOOPS SHALL BE INSTALLED IN THE CLOCKWISE DIRECTION.

2. NO MORE THAN 4 LOOP CONDUCTORS SHALL BE INSTALLED IN ONE SAWED SLOT.

3. IDENTIFY AND TAG WITH LOOP NUMBER, START (S) AND FINISH (F) OF EACH CONDUCTOR WITH IDENTIFICATION NYLON CABLE TIES AND NON-ERASABLE INK. WHEN MULTIPLE LANES ARE RECEIVING LOOPS THE TAGS SHALL ALSO INDICATE THE PROPER LANE AS FOLLOWS: LANE 1, LANE 2, OR LEFT TURN 1, LEFT TURN 2, ETC. WHERE 1 INDICATES THE LANE CLOSEST TO THE ISLAND OR DOUBLE YELLOW CENTER LINE, WITH LANES BEING NUMBERED CONSECUTIVELY AS YOU WORK YOUR WAY TO THE CURB OR ROADWAY EDGE. INCLUDE RIGHT TURN-LANE LOOPS AND BIKE LOOPS.

4. TO PREVENT FIELD CANCELLATION, LOOPS SHALL BE WIRED SUCH THAT CURRENT IN ADJACENT LOOPS WILL FLOW IN THE SAME DIRECTION AS SHOWN IN THE WIRING DETAIL. ALL SPLICES SHALL BE SOLDERED ACCORDING TO THE STANDARD SPECIFICATIONS FOR LOOP DETECTOR SPLICES.

5. LOOP SLOTS SHALL BE 1/4 INCH (6.4 mm) WIDTH.

6. FROM THE PULL BOX INTO THE CABINET 4 CONDUCTOR OR 2 CONDUCTOR. TWISTED PAIR CABLE WILL BE REQUIRED AS APPROVED BY THE AGENCY.

7. THE TERMINALS IN THE CABINET MUST BE SOLDERED AND THE WIRES SHOULD BE TWISTED PRIOR TO ATTACHMENT IN THE CABINET.

8. CALL LOOPS (6' X 6' (1.83 m X 1.83 m)) SHALL BE INSTALLED 3' (915 mm) OR 6' (1.83 m) BEHIND STOP BAR AS SPECIFIED.

9. 6' X 6' (1.83 m X 1.83 m) TURN LOOP CONFIGURATION, UNLESS OTHERWISE SPECIFIED:
   a. CALL (STOP BAR) LOOPS CONSIST OF 3 TURNS
   b. ADVANCE LOOPS (TYPICALLY 100-200 FEET (30.48 m-60.96 m) FROM STOP BAR, SHALL CONSIST OF 4 TURNS.
   c. SYSTEM LOOPS, TYPICALLY 300-400 FEET (91.44 m-121.92 m) FROM STOP BAR, SHALL CONSIST OF 5 TURNS.

10. HOOK UP SYSTEM LOOPS IN PARALLEL, ADVANCE LOOPS IN SERIES.

ISSUED:		STANDARD DETAIL		DETAIL NO.
7/89	CITY OF TUCSON FOUNDED 1775	6x6 PRESENCE MULTI-LOOP DETECTOR	THE SEAL of PIMA COUNTY ARIZONA	T 714
REVISED:				
10/02				SHEET 1 OF 6

TS7-14-1.DWG 12/07/00 12:02

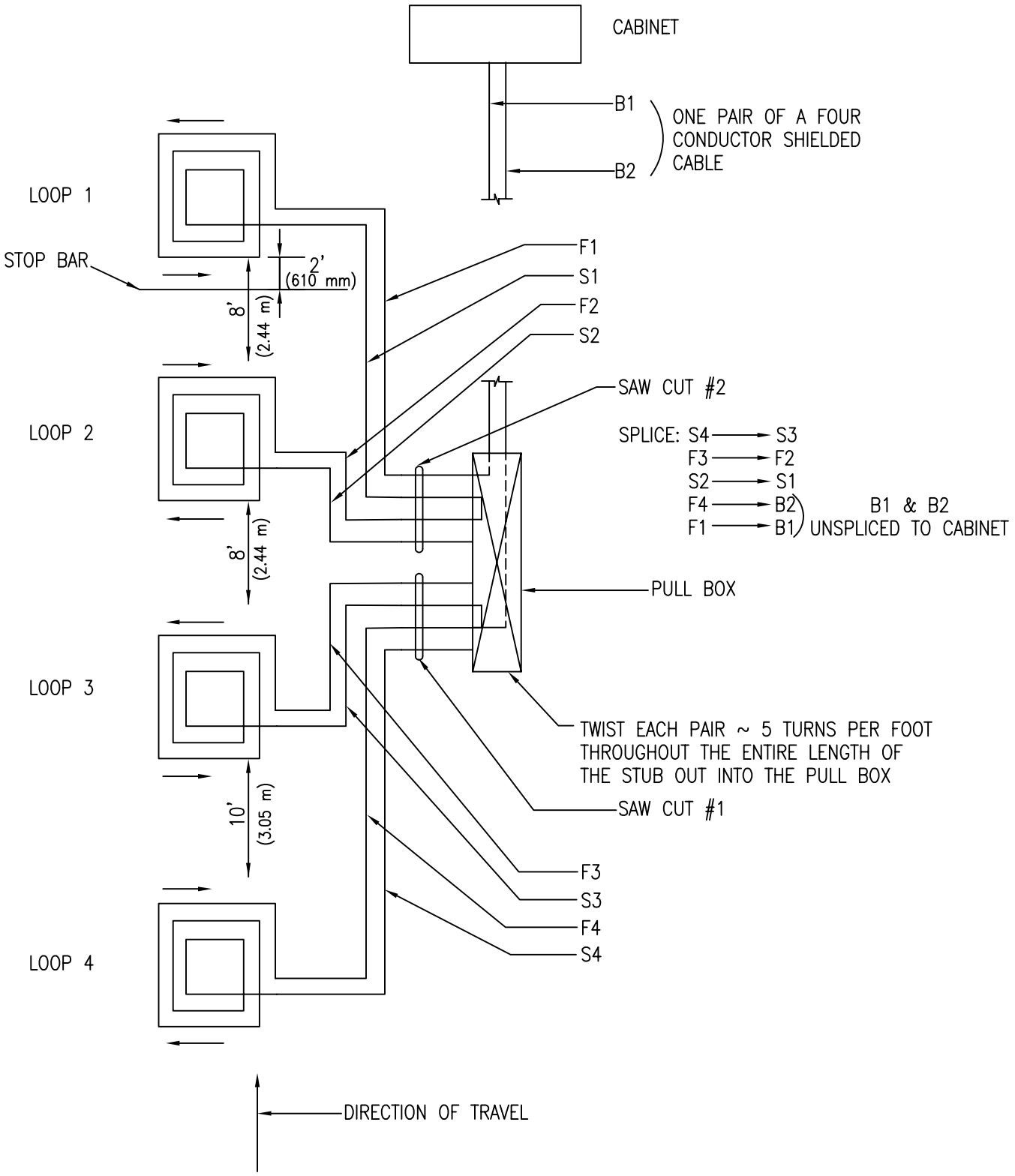

ISSUED:		STANDARD DETAIL		DETAIL NO.
7/89	CITY OF TUCSON FOUNDED 1775	6X6 PRESENCE LOOP DETECTOR (WIRING DETAIL)	THE SEAL of PIMA COUNTY ARIZONA	T 714
REVISED: 11/04				SHEET 2 OF 6

TS7-14-2.DWG 08/07/00 14:22

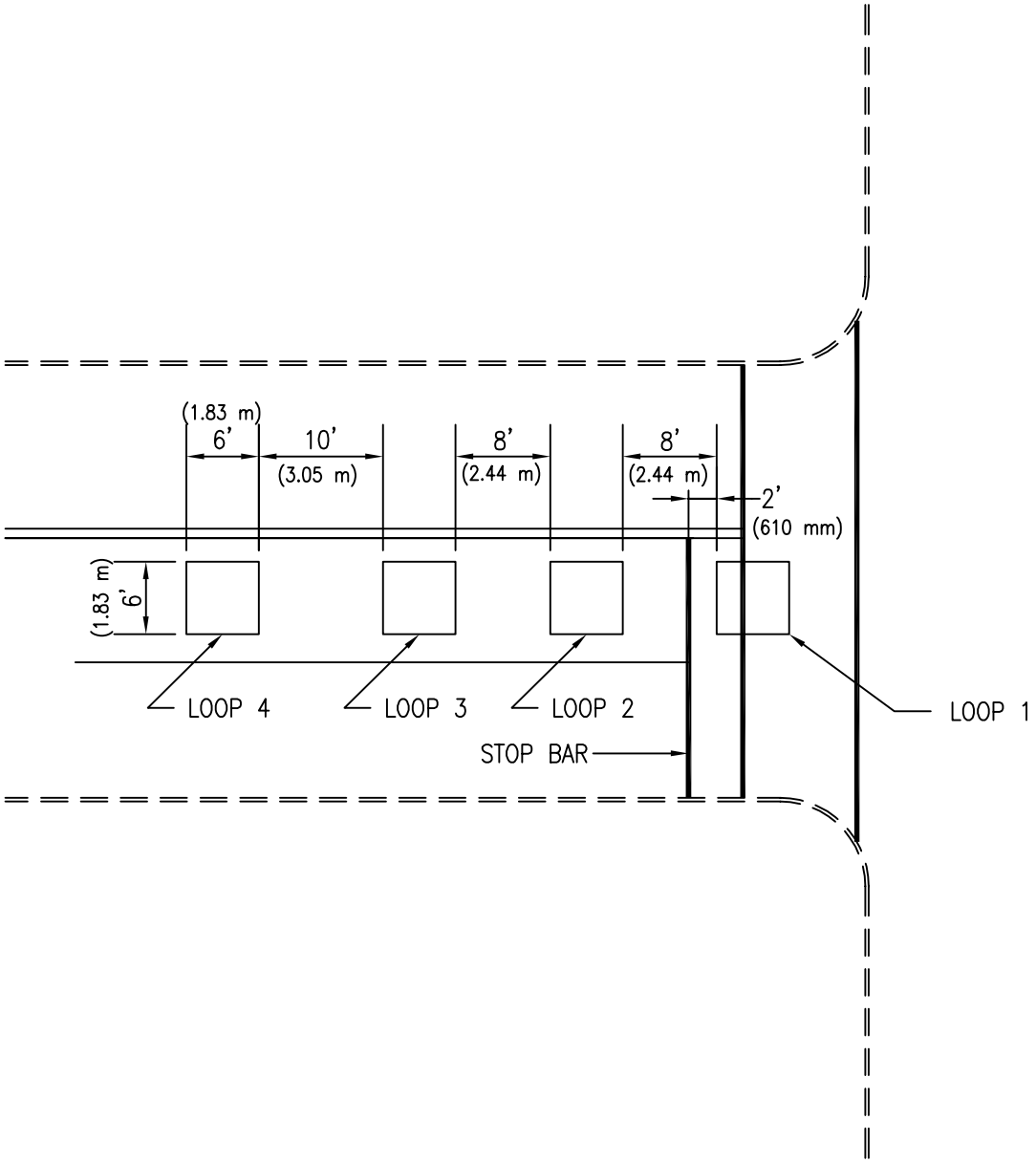

ISSUED:		STANDARD DETAIL		DETAIL NO.
7/89		6X6 PRESENCE LOOP DETECTOR (SAW CUT DETAIL)		T 714
REVISED:				
10/02				SHEET 3 OF 6

TS7-14-3.DWG 12/07/00 12:03

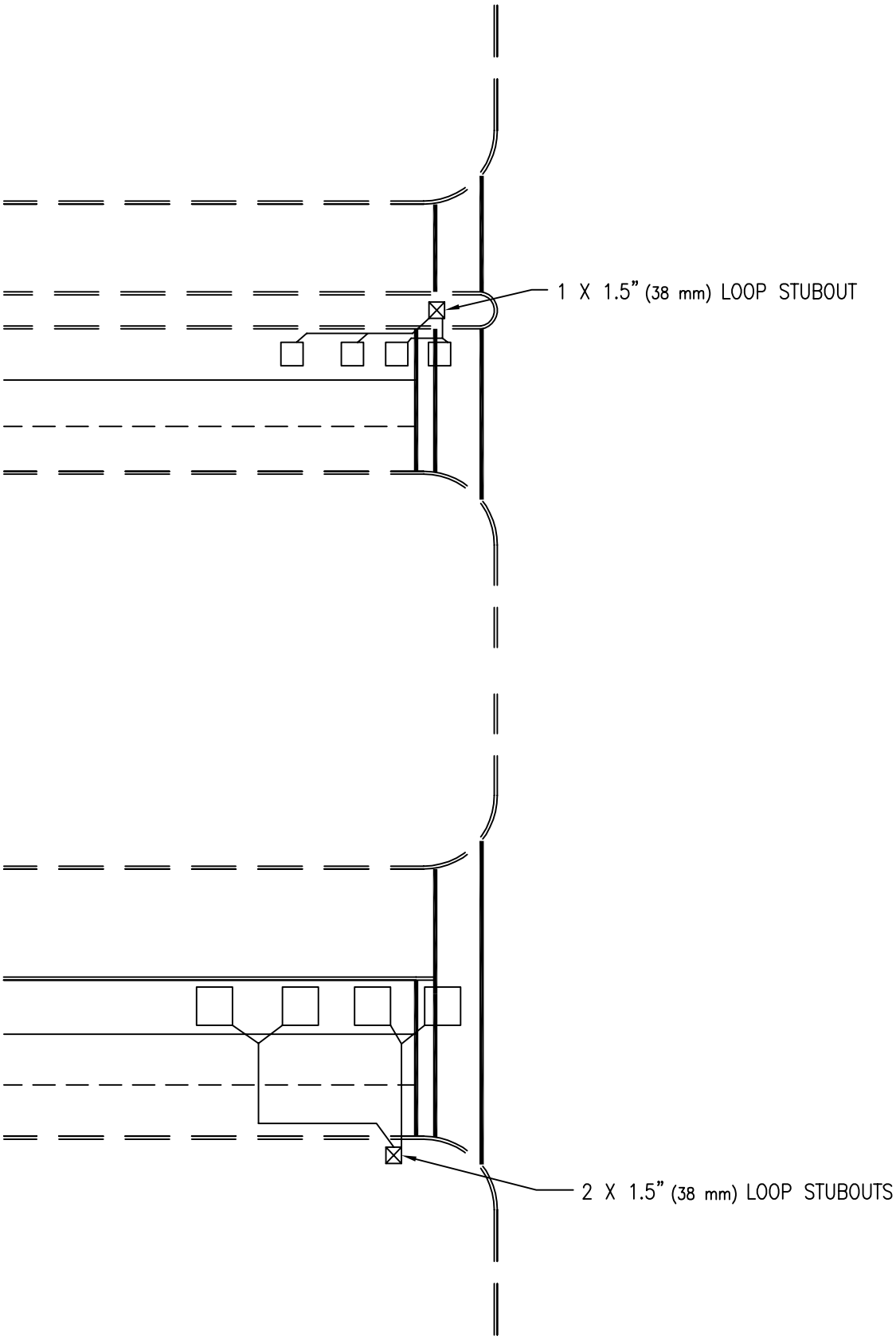

ISSUED:		STANDARD DETAIL		DETAIL NO.
7/89		6X6 PRESENCE LOOP DETECTOR (CASE 1: 1 LOOP)		T 714
REVISED:				
10/02				SHEET 4 OF 6

TS7-14-4.DWG 12/07/00 12:12

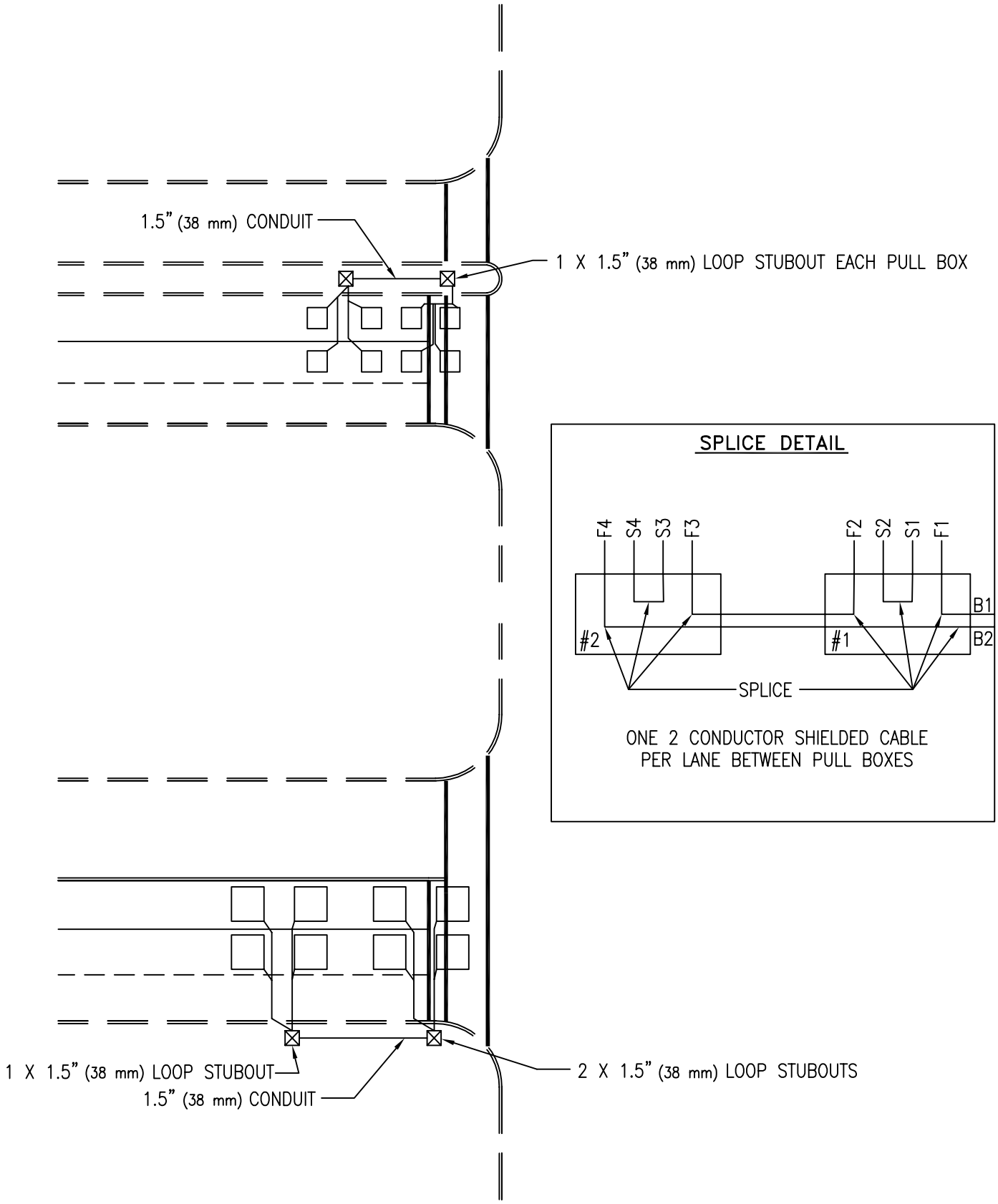

ISSUED:		STANDARD DETAIL		DETAIL NO.
7/89	CITY OF TUCSON FOUNDED 1775	6X6 PRESENCE LOOP DETECTOR (CASE 2: 2 LOOP)	THE SEAL of PIMA COUNTY ARIZONA	T 714
REVISED:				
10/02				SHEET 5 OF 6

TS7-14-5.DWG 12/07/00 13:19

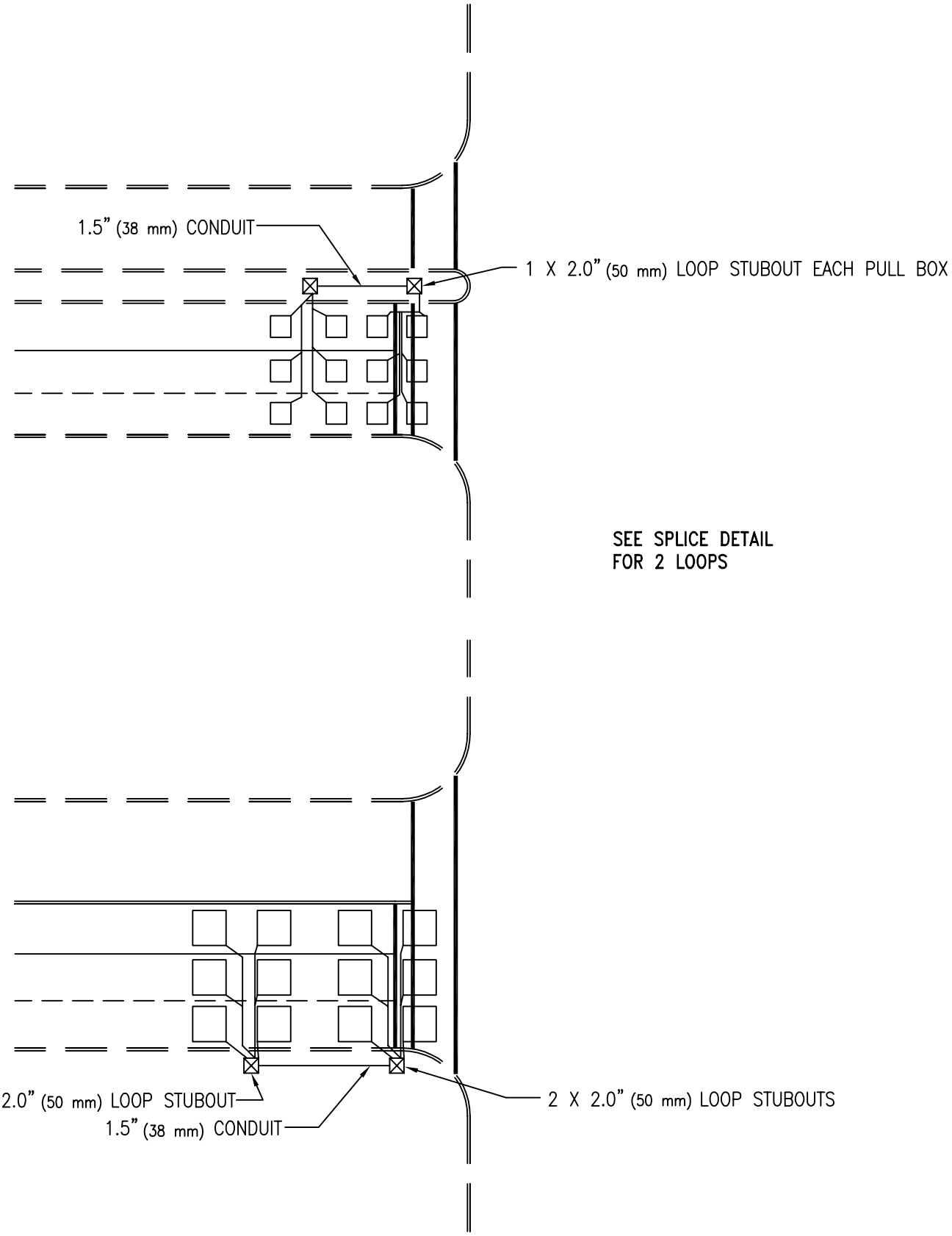

ISSUED:		STANDARD DETAIL		DETAIL NO.
7/89		6X6 PRESENCE LOOP DETECTOR (CASE 3: MULTI-LOOPS)		T 714
REVISED:				
10/02				SHEET 6 OF 6

TS7-14-6.DWG 12/07/00 13:20

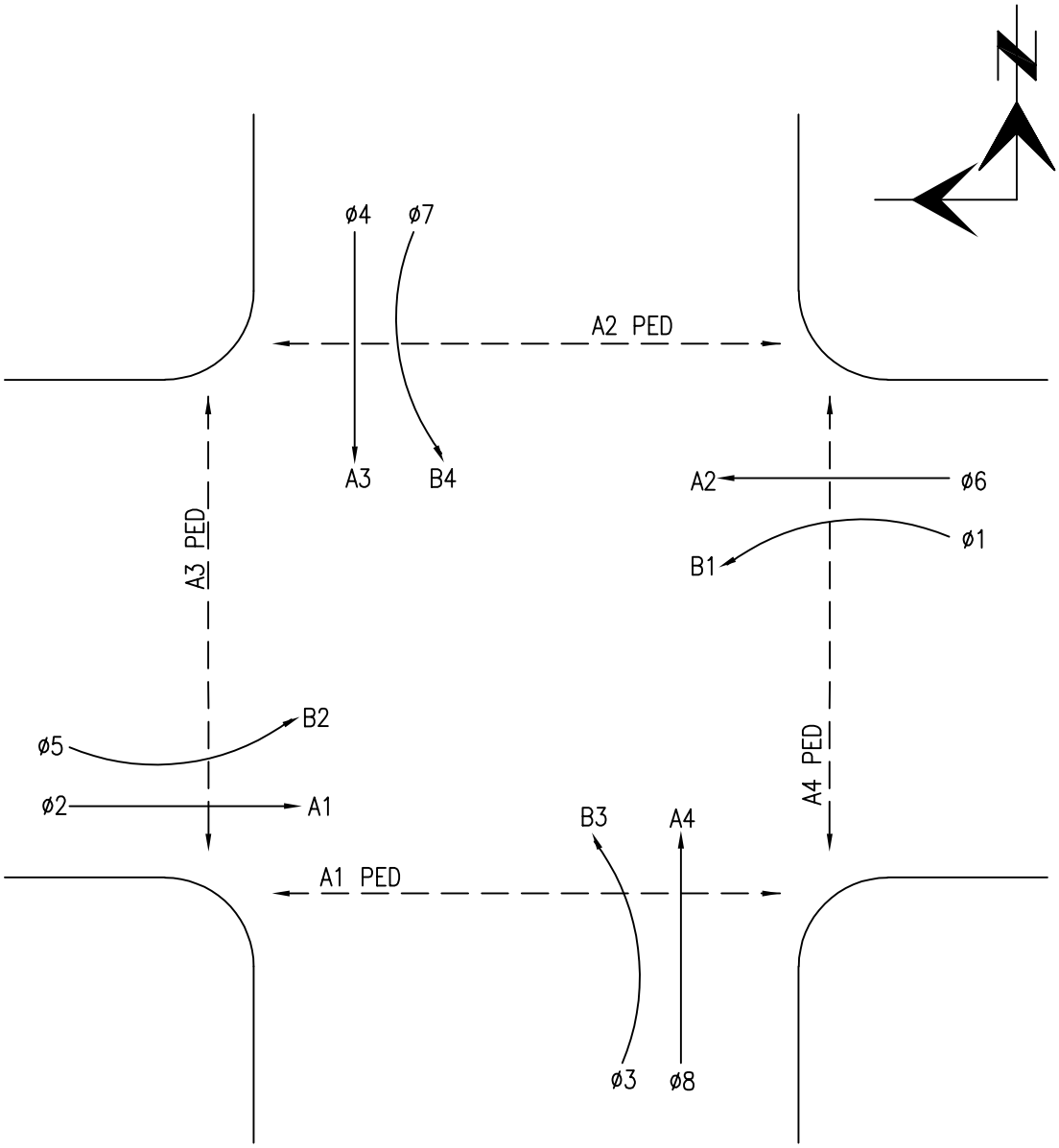

ORIENT NORTH ARROW SO THE MAIN STREET IS A1 AND A2

ISSUED:		STANDARD DETAIL		DETAIL NO.
7/89		STANDARD PHASING DETAIL		T 800
REVISED:				
10/02				SHEET 1 OF 1

TS8-0.DWG 12/07/00 13:21

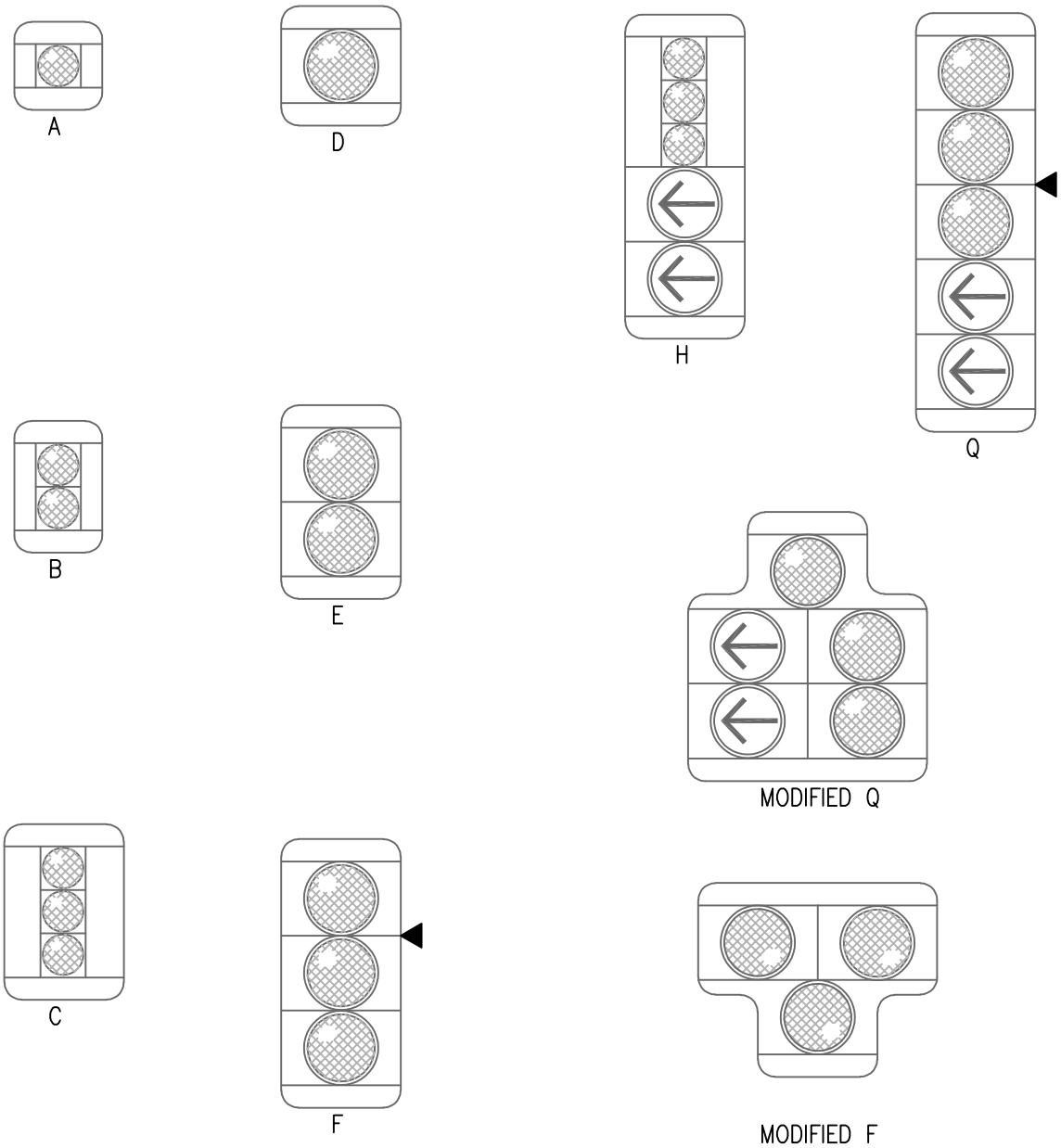

NOTE:

ALL POLYCARBONATE HEADS USED FOR MAST ARM MOUNTING OR SPAN WIRE MOUNTING SHALL BE SUPPLIED WITH REINFORCING PLATES. REFER TO STD. DET. T 901–T 913 FOR MOUNTING ASSEMBLY DETAILS.

ISSUED:		STANDARD DETAIL		DETAIL NO.
7/89		SIGNAL FACES WITH BACKPLATES		T 801
REVISED:				
10/02				SHEET 1 OF 2

TS8-1-1.DWG 12/07/00 13:21

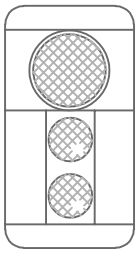

INV. J

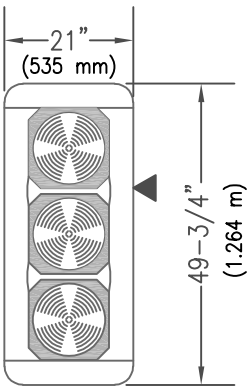

0-3

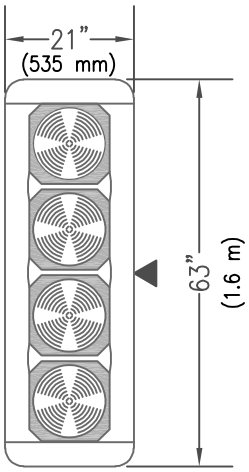

0-4

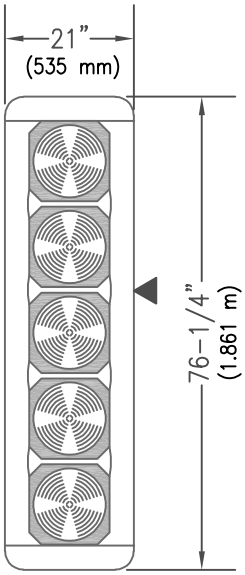

0-5

NOTES:

1. ALL MATERIALS AND CONSTRUCTION SHALL CONFORM TO THE REQUIREMENTS OF THE SPECIFICATIONS.
2. ALL DIMENSIONS SHOWN ARE NOMINAL.
3. BACKPLATES SHALL BE CONTINUOUS WITH NO OPEN GAPS.

◀ INDICATES LOCATION OF ELEVATOR PLUMBIZER FOR MAST ARM MOUNTS AS PER PLANS.

ISSUED:		STANDARD DETAIL		DETAIL NO.
7/89		SIGNAL FACES WITH BACKPLATES		T 801
REVISED:				
10/02				SHEET 2 OF 2

\\Glen\9626.00\C1\T S\T S Eng&Met\TS8-1-2.dwg 11/19/01 11:18:48 AM UMST

NOTES:

1. ALL MATERIAL AND CONSTRUCTION SHALL CONFORM TO THE REQUIREMENTS OF THE STANDARD SPECIFICATIONS.
2. ALUMINUM VISORS TO BE 11" (279 mm) TO 12" (305 mm) LONG AND POLY VISORS TO BE 8" (205 mm) TO 10" (254 mm), UNLESS SPECIFIED OTHERWISE.
3. VISORS SHALL BE ATTACHED TO THE SIGNAL HOUSING WITH TABS AS SHOWN.

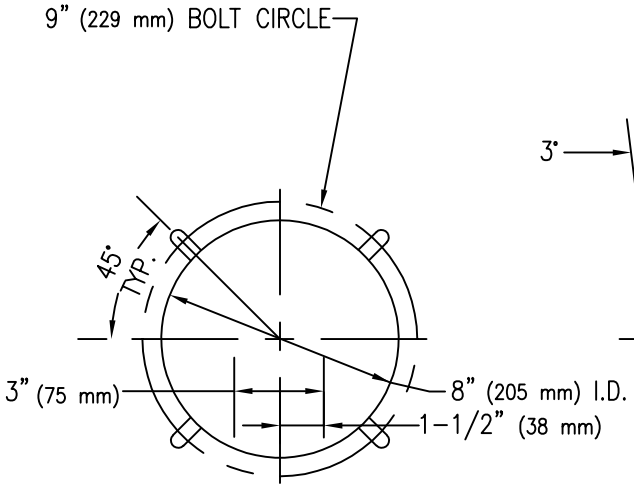

8" (205 mm) UNIT VISORS
TUNNEL TYPE

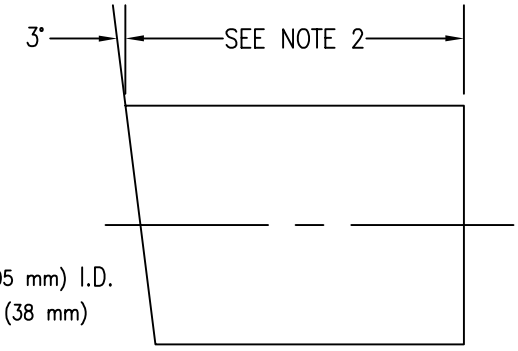

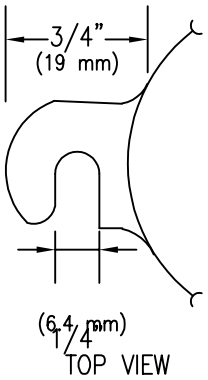

TYPICAL VISOR
ATTACHING TAB

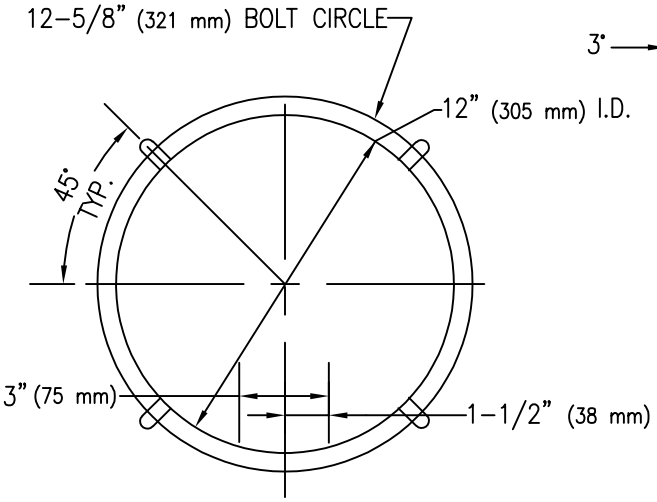

12" (305 mm) UNIT VISORS
TUNNEL TYPE

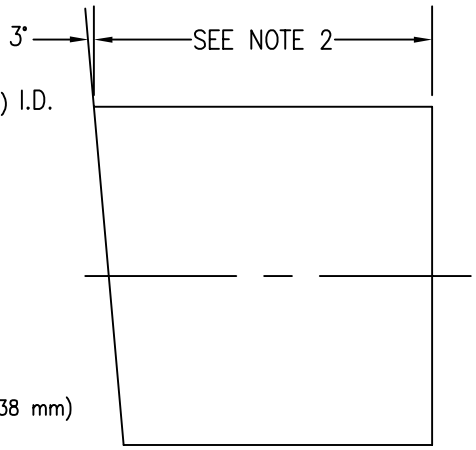

ISSUED:		STANDARD DETAIL		DETAIL NO.
7/89		VISORS FOR 8" AND 12" SIGNALS		T 802
REVISED:				
10/02				SHEET 1 OF 1

TS8-2.DWG 12/07/00 13:22

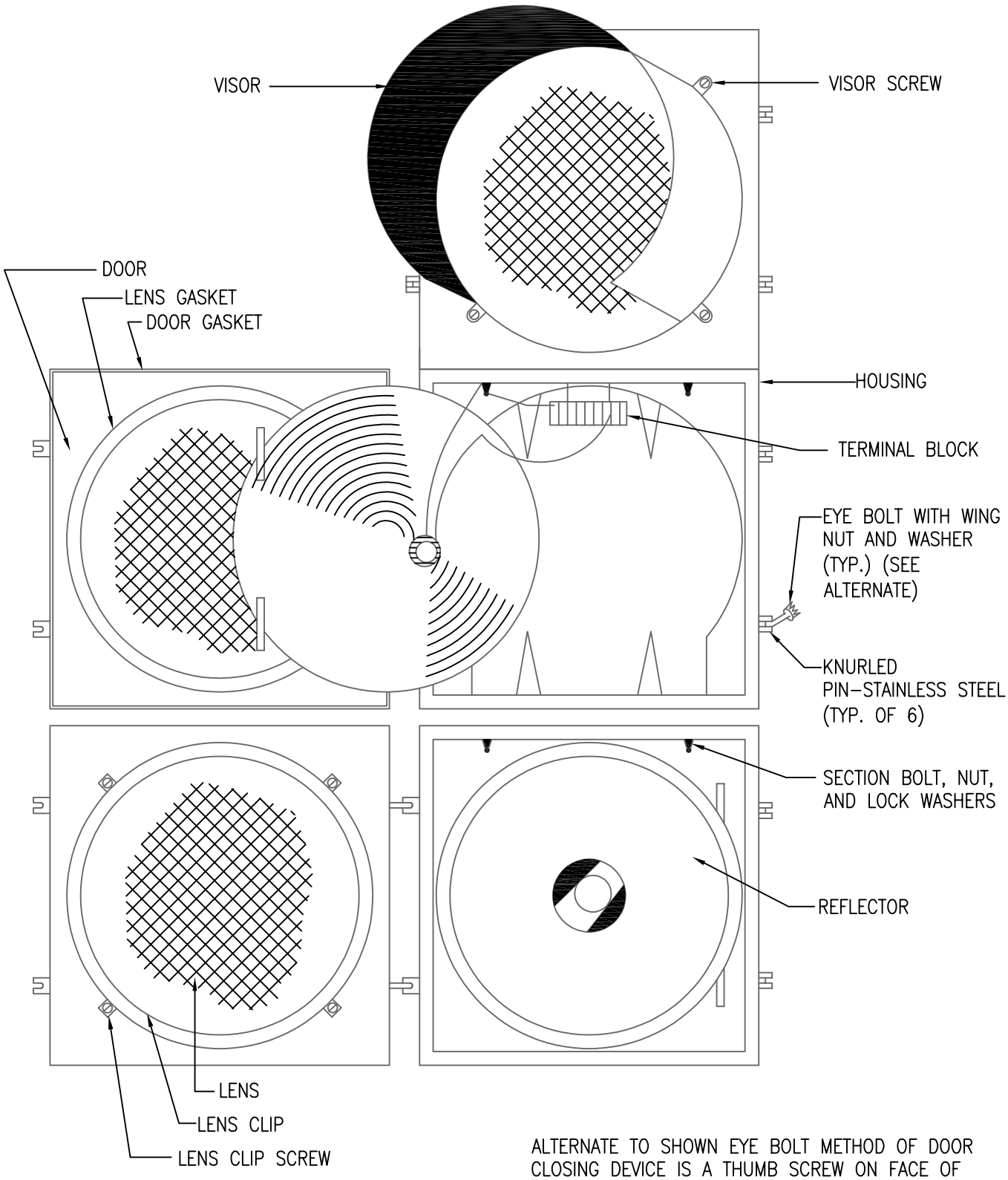

ALTERNATE TO SHOWN EYE BOLT METHOD OF DOOR CLOSING DEVICE IS A THUMB SCREW ON FACE OF DOOR PROTRUDING INTO THREADS IN REAR HOUSING.

ISSUED:		STANDARD DETAIL		DETAIL NO.
7/89		TYPICAL SIGNAL HEAD		T 803
REVISED:				
10/02				SHEET 1 OF 1

TS8–3.DWG 12/07/00 13:23

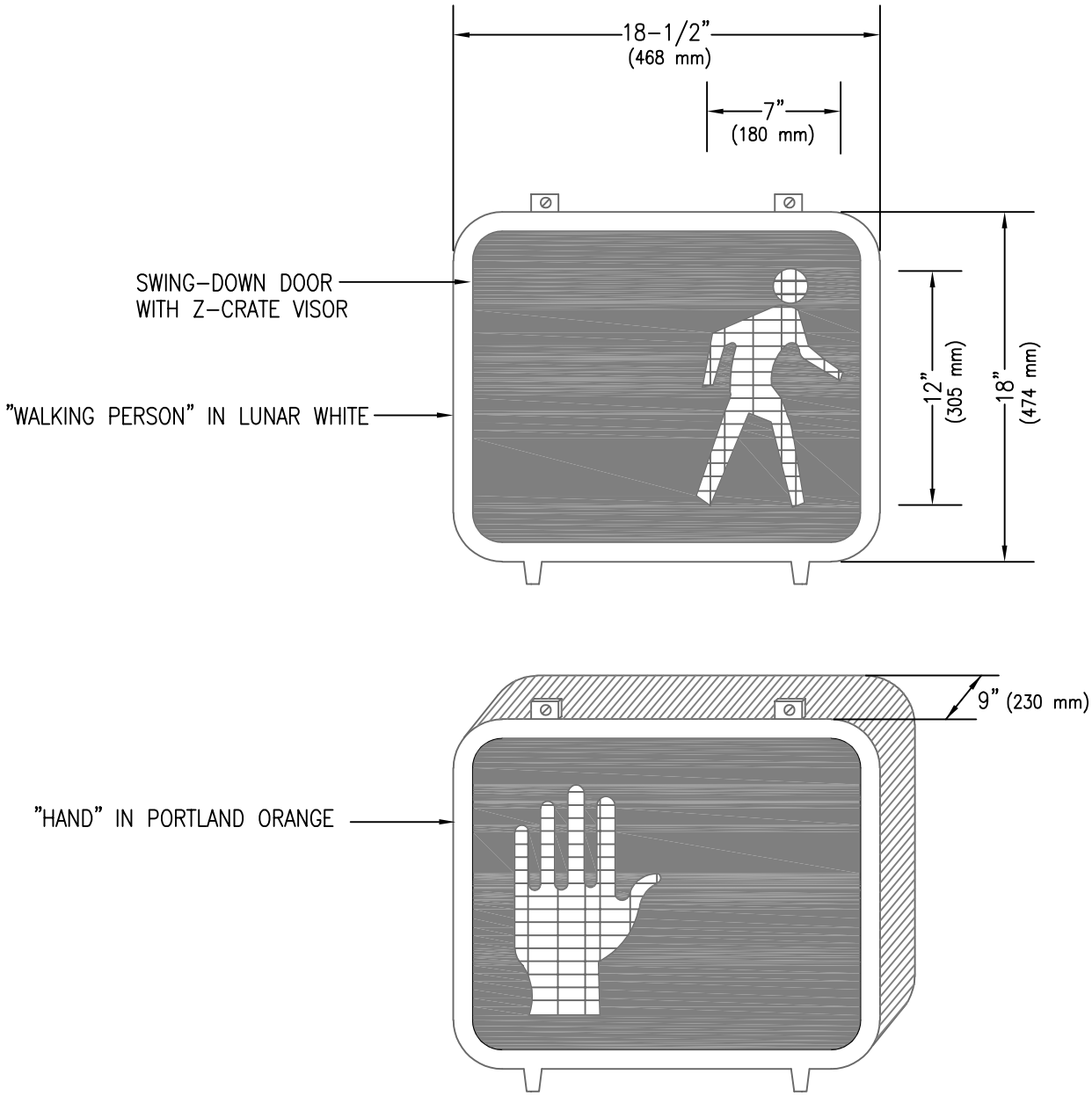

ISSUED:		STANDARD DETAIL		DETAIL NO.
7/89		PEDESTRIAN MAN/HAND STYLE SIGNAL		T 804
REVISED:				
10/02				SHEET 1 OF 1

TS8-4.DWG 12/07/00 13:23

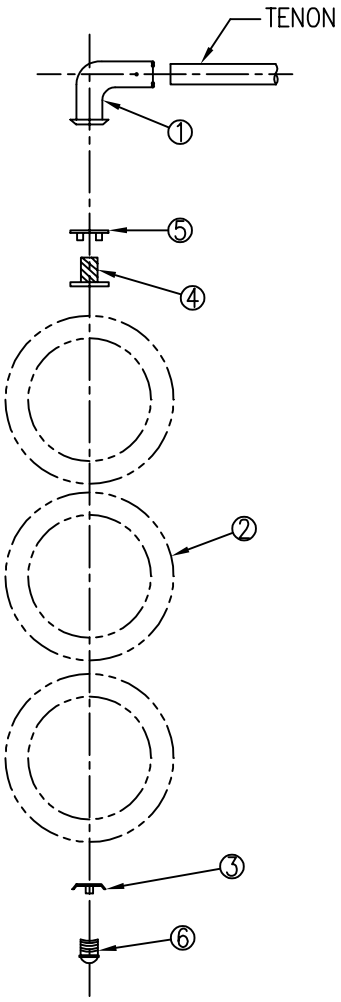

TYPE I MOUNTING

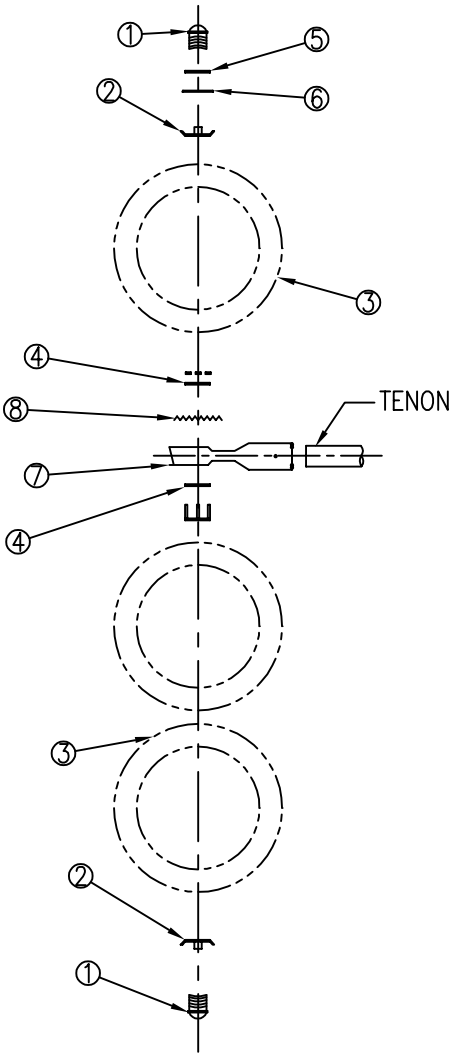

TYPE II MOUNTING

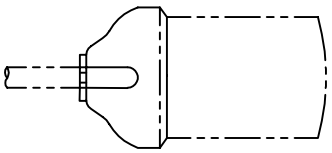

MOUNTING ORIENTATION PLAN

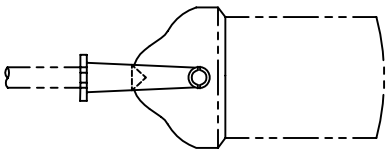

MOUNTING ORIENTATION PLAN

NOTE: TYPE I MOUNT TO BE USED WITH ALUMINUM HEADS ONLY

ISSUED:		STANDARD DETAIL		DETAIL NO.
7/89	CITY OF TUCSON	TYPE I AND II MOUNTING ASSEMBLY	THE SEAL of PIMA COUNTY ARIZONA	T 901
REVISED:				
10/02				SHEET 1 OF 2

TS9-1-1.DWG 12/07/00 13:25

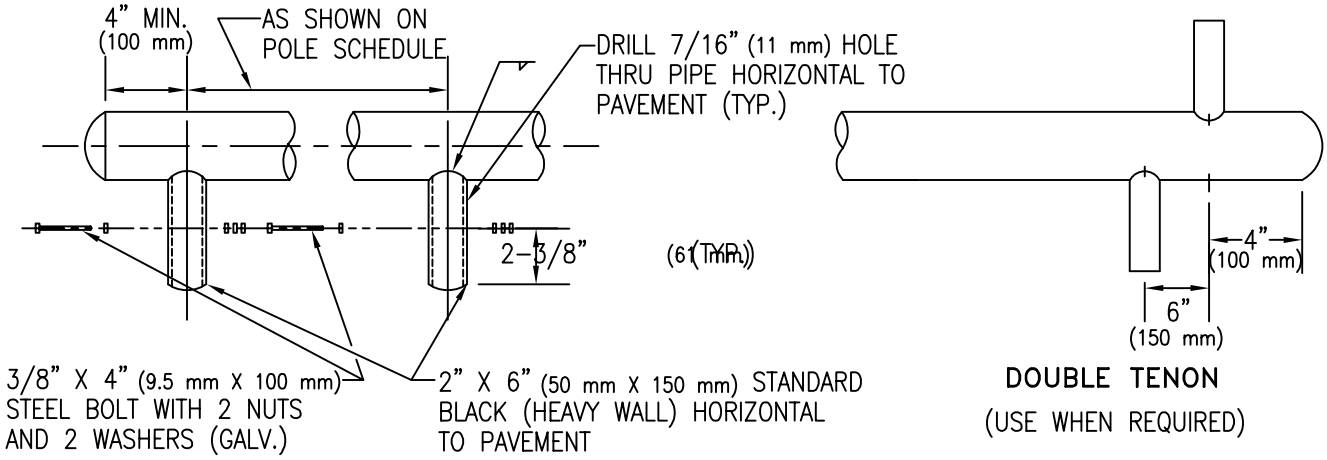

TENON DETAIL

DOUBLE TENON

(USE WHEN REQUIRED)

TYPE I MOUNT

LIST OF MATERIAL		
ITM.	QUA.	
1	1	MAST ARM PLUMBIZER WITH LOCKING DEVICE (SEE T1002)
2	1	SIGNAL HEAD, SEE PLANS
3	1	CONDUIT LOCKNUT
4	1	1-1/2" (38 mm) X 1-3/4" (44 mm) LOCK NIPPLE
5	1	LOCK RING (SEE T1001-4)
6	1	ORNAMENTAL CAP (SEE T1001-6)

TYPE II MOUNT

LIST OF MATERIAL		
ITM.	QUA.	
1	2	ORNAMENTAL CAP (SEE T1001-6)
2	2	CONDUIT LOCKNUT
3	1	SIGNAL HEAD, SEE PLANS POLE LAYOUT
4	2	ATTACHING WASHERS W/ 3-1/4-20 UNC x 3-1/2 CARRIAGE
		BOLTS AND NUTS
5	1	FLAT WASHERS
6	1	NEOPRENE WASHER
7	1	ELEVATOR PLUMBIZER (SEE T1002)
8	1	LOCK WASHER

ISSUED:		STANDARD DETAIL		DETAIL NO.
7/89	CITY OF TUCSON FOUNDED 1775	TYPE I AND II MOUNTING ASSEMBLY	THE SEAL of PIMA COUNTY ARIZONA	T 901
REVISED: 11/04				SHEET 2 OF 2

TS9-1-2.DWG 12/07/00 13:27

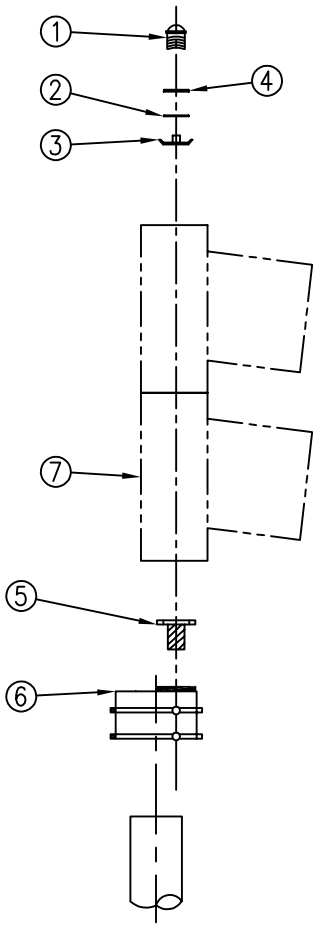

TYPE III MOUNTING

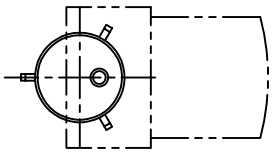

MOUNTING ORIENTATION PLAN

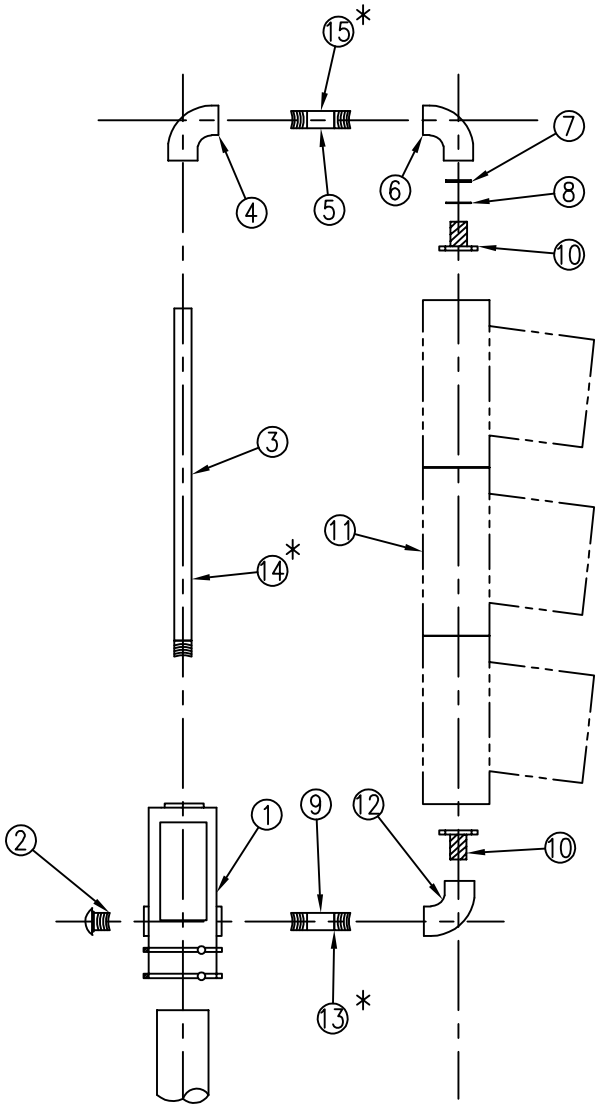

TYPE IV MOUNTING

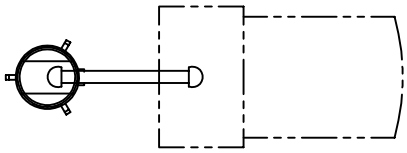

MOUNTING ORIENTATION PLAN

ISSUED:		STANDARD DETAIL		DETAIL NO.
7/89		TYPE III AND IV MOUNTING ASSEMBLY		T 902
REVISED:				
10/02				SHEET 1 OF 2

TS9-2-1.DWG 12/07/00 13:27

TYPE III MOUNT

LIST OF MATERIAL		
ITM.	QUA.	
1	1	ORNAMENTAL CAP (T1001-6)
2	1	NEOPRENE WASHER
3	1	CONDUIT LOCKNUT
4	1	FLAT WASHER
5	1	1-1/2" (38 mm) LOCK NIPPLE 1-1/8" (28 mm) LONG
6	1	POLE TOP OFFSET MOUNT (T1001-3)
7	1	SIGNAL HEAD - SEE PLANS

TYPE IV MOUNT

	LIST OF MATERIAL		
	ITM.	QUA.	
	1	1	POLE TOP MOUNTED TERMINAL COMPARTMENT (T1004-2)
	2	1	ORNAMENTAL CAP (T1001-6)
	3	1	1-1/2" (38 mm) CENTER PIPE, SEE TABLE
	4	1	90° ELBOW, DRILL AND TAP FOR SETSCREW
	5	1	1-1/2" (38 mm) PIPE NIPPLE, 6-1/2" (165 mm) LONG
	6	1	90° ELBOW
	7	1	FLAT WASHER
	8	1	NEOPRENE WASHER
	9	1	1-1/2" (38 mm) PIPE NIPPLE, 6" (150 mm) LONG
	10	2	1-1/2" (38 mm) LOCK NIPPLE, SEE NOTE BELOW
	11	1	SIGNAL HEAD, SEE PLANS
	12	1	90° ELBOW WITH LOCKING DEVICE (T1001-2)
*	13	1	1-1/2" (38 mm) PIPE NIPPLE, 12" (305 mm) LONG
*	14	1	1-1/2" (38 mm) PIPE NIPPLE, 9-1/2" (242 mm) LONG FOR PED SIGNAL FOR
			ILLUMINATED MESSAGE UNITS USE 23 5/8" X 1-1/2" (600 mm X 38 mm) PIPE
*	15	1	1-1/2" (38 mm) PIPE NIPPLE, 12-1/2" (318 mm) LONG

NOTE:
LOCK NIPPLE LENGTH SHALL BE 1-1/8" (28 mm) FOR 8" (205 mm) HEADS AND 1-3/4" (44 mm) FOR 12" (305 mm) HEADS.

NIPPLE LENGTH

TYPE IV MOUNT (ITEM 3)

SIGNAL FACE	C		F	M	Q	G	H
NIPPLE LENGTH	24 (610 mm)		37-7/8 (962 mm)	38-3/4 (984 mm)	61 (1.549 m)	52-5/8 (1.338 m)	53-1/2 (1.358 m)

* NIPPLE LENGTHS FOR USE WITH PEDESTRIAN SIGNAL UNITS, OR ILLUMINATED MESSAGE UNITS

ISSUED:	STANDARD DETAIL	DETAIL NO.
7/89	TYPE III AND IV MOUNTING ASSEMBLY	T 902
REVISED: 11/04		SHEET 2 OF 2

TS9-2-2.DWG 12/07/00 13:33

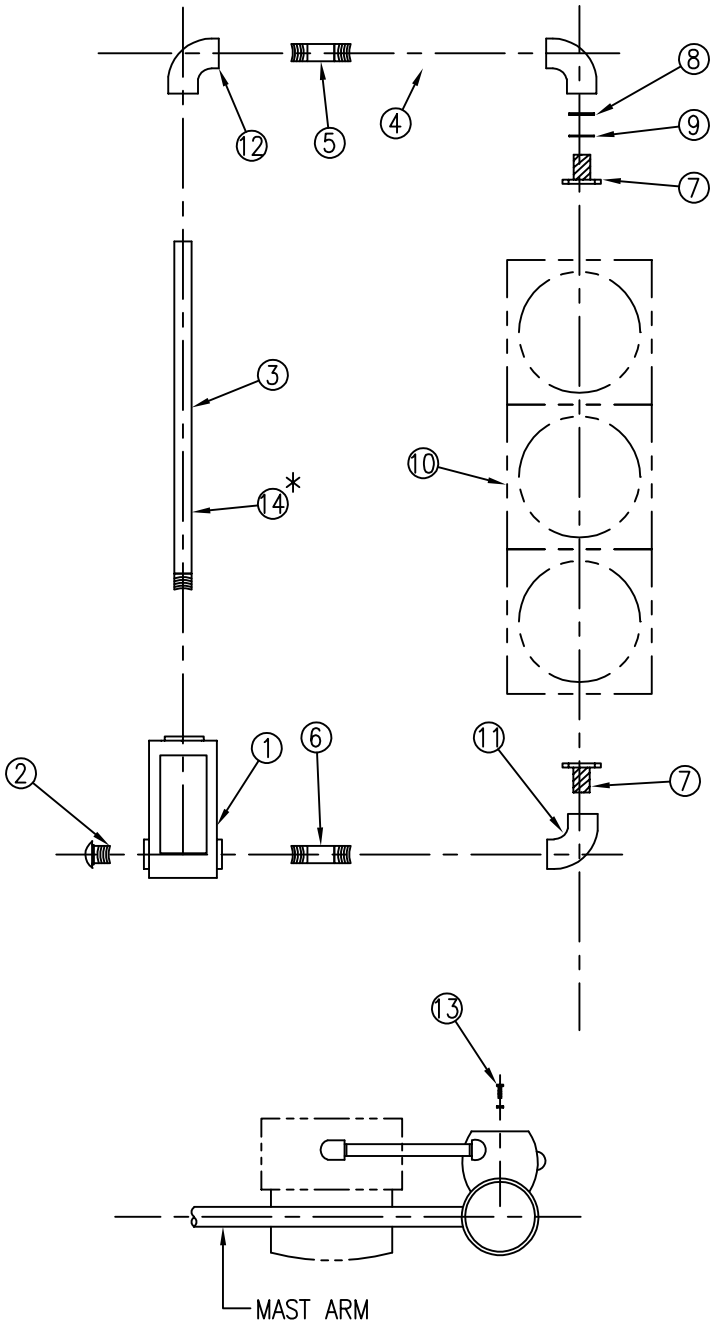

MOUNTING ORIENTATION PLAN

ISSUED:		STANDARD DETAIL		DETAIL NO.
7/89		TYPE V MOUNTING ASSEMBLY		T 903
REVISED:				
11/04				SHEET 1 OF 2

TS9-3-1.DWG 12/07/00 13:34

LIST OF MATERIAL		
ITM.	QUA.	DESCRIPTION
1	1	TERMINAL COMPARTMENT FOR SIDE MTG. (SEE T1004-1)
2	1	ORNAMENTAL CAP (SEE T1001-6)
3	1	1-1/2" (38 mm) I.D. PIPE, SEE TABLE
4	1	1-1/2" (38 mm) I.D. PIPE 90° ELL
5	1	1-1/2" (38 mm) I.D. PIPE NIPPLE, 18-1/2" (468 mm) LONG
6	1	1-1/2" (38 mm) I.D. PIPE NIPPLE, 18" (455 mm) LONG
7	1	1-1/2" (38 mm) LOCK NIPPLE, SEE NOTE NO. 1
8	1	FLAT WASHER
9	1	NEOPRENE WASHER
10	1	SIGNAL HEAD, SEE PLANS
11	1	90° ELBOW WITH LOCKING DEVICE (SEE T1001-2)
12	1	1-1/2"(38 mm) I.D. PIPE 90° ELBOW, DRILL AND TAP FOR SETSCREW
13	2	1/2" X 2" (13 mm X 50 mm) GALVANIZED STEEL BOLT 13-UNC WITH FLAT
		WASHER AND LOCK WASHER.
* 14	1	1-1/2" (38 mm) PIPE NIPPLE 9-1/2" (242 mm) - FOR PEDESTRIAN SIGNAL
		UNITS ONLY (FOR ILLUMINATED MESSAGE, USE 25-3/8" (645 mm) PIPE)

NIPPLE LENGTH
(ITEM 3)

SIGNAL FACE	C	J	F	M	N	G
NIPPLE LENGTH	24 (610 mm)	28-5/8 (726 mm)	37-7/8 (962 mm)	38-3/4 (984 mm)	43-3/8 (1.105 m)	52-5/8 (1.336 m)

NOTES:

1. LOCK NIPPLE LENGTH SHALL BE 1-1/8" (28 mm) FOR 8" (205 mm) HEADS AND 1-3/4" (44 mm) FOR 12" (305 mm) HEADS.
2. FOR POLE DRILLING DETAIL SEE T 418.

* SPECIAL NIPPLE LENGTH FOR USE ONLY WITH PED. SIGNAL SINGLE HEAD UNITS.

3. MOUNT TO POLE USING 1/2" X 2" (13 mm X 50 mm) GALVANIZED STEEL BOLT 13-UNC WITH FLAT WASHER AND LOCK WASHER.

ISSUED:		STANDARD DETAIL		DETAIL NO.
7/89	CITY OF TUCSON FOUNDED 1775	TYPE V MOUNTING ASSEMBLY	THE SEAL of PIMA COUNTY ARIZONA	T 903
REVISED: 11/04				SHEET 2 OF 2

TS9-3-2.DWG 12/07/00 13:34

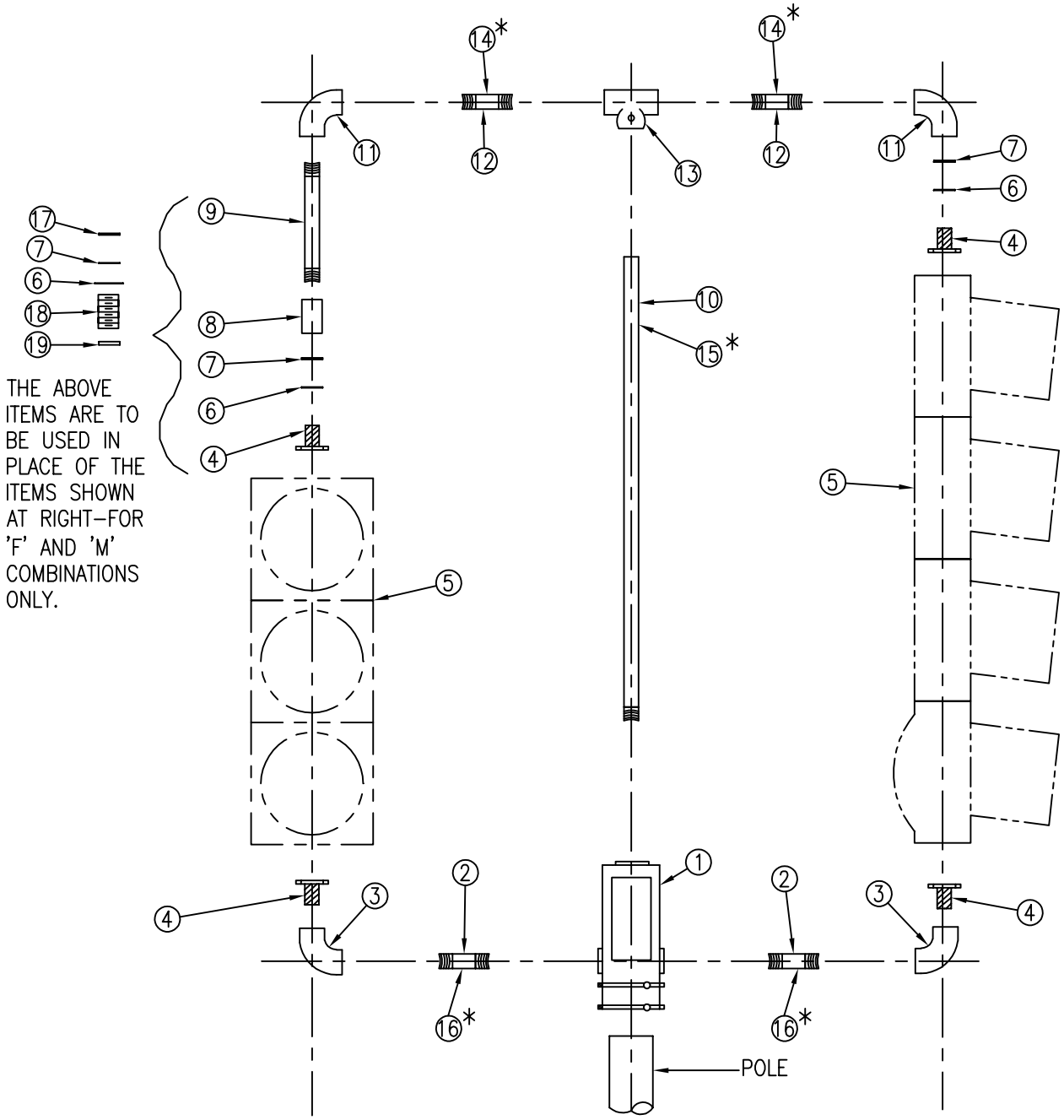

ISSUED:		STANDARD DETAIL		DETAIL NO.
7/89		TYPE VI MOUNTING ASSEMBLY		T 904
REVISED:				
10/02				SHEET 1 OF 2

TS9–4–1.DWG 12/07/00 13:35

LIST OF MATERIAL		
ITM.	QUA.	DESCRIPTION
1	1	TERMINAL COMPARTMENT POLE TOP MTG. T1004-2
2	2	1-1/2" (38 mm) I.D. PIPE NIPPLE, 6" (150 mm) LONG
3	2	90° ELL WITH LOCKING DEVICE (SEE T1001-2)
4	4	1-1/2" (38 mm) LOCK NIPPLE, SEE NOTE 1
5	2	SIGNAL HEAD, SEE PLANS
6	2	NEOPRENE WASHER
7	2	FLAT WASHER
8	1	1-1/2" (38 mm) PIPE COUPLING, AS REQUIRED
9	1	1-1/2" (38 mm) PIPE NIPPLE, SEE TABLE
10	1	1-1/2" (38 mm) CENTER PIPE, SEE TABLE
11	2	90° ELBOW, 1-1/2" (38 mm)
12	2	1-1/2" (38 mm) PIPE NIPPLE, 6-1/2" (165 mm) LONG
13	1	PIPE TEE, DRILL AND TAP FOR SETSCREW
* 14	2	1-1/2" (38 mm) PIPE NIPPLE, 12-1/2" (318 mm) LONG FOR PED SIGNAL HEADS
* 15	1	1-1/2" (38 mm) PIPE NIPPLE, 9-1/2" (242 mm) LONG FOR PED SIGNAL HEADS
* 16	2	1-1/2" (38 mm) PIPE NIPPLE, 12" (305 mm) LONG FOR PED SIGNAL HEADS
17	1	CONDUIT LOCK NUT (FOR 'F' AND 'M' COMBINATION ONLY)
18	1	1-1/2" (38 mm) PIPE NIPPLE, 3" (75 mm) LONG (FOR 'F' AND 'M' COMBINATION ONLY)
19	1	MALLEABLE HEX NUT (FOR 'F' AND 'M' COMBINATION ONLY)

TABLE TO BE USED FOR FINDING NIPPLE LENGTH

(USE FOR ITEM 9 ONLY)

SIGNAL FACES COMBINATION	C	J	F	M	N	G
C	ø		12-7/8 (327 mm)	13-3/4 (349 mm)		27-5/8 (701 mm)
J	3-5/8 (92 mm)		8-1/4 (209 mm)	9-1/8 (232 mm)		23 (584 mm)
F	12-7/8 (327 mm)		ø	3 (75 mm)		13-3/4 (349 mm)
M	13-3/4 (349 mm)		3 (75 mm)	ø		12-7/8 (327 mm)
N	18-3/8 (465 mm)		4-1/2 (115 mm)	3-5/8 (92 mm)		8-1/4 (209 mm)
G	27-5/8 (701 mm)		13-3/4 (349 mm)	12-7/8 (327 mm)		ø

(USE FOR ITEM 10 ONLY)

SIGNAL FACE	C	J	F	M	N	G
NIPPLE LENGTH	24 (610 mm)		37-7/8 (962 mm)	38-3/4 (984 mm)		52-5/8 (1.336 m)

THREADS ON ONE END ONLY

NOTES:

1. LOCK NIPPLE LENGTHS HALL BE 1-1/8" (28 mm) FOR 8" (205 mm) HEAD AND 1-3/4" (44 mm) FOR 12" (305 mm) HEAD

* SPECIAL NIPPLE LENGTH FOR USE ONLY WITH PED. SIGNAL SINGLE HEAD UNITS AND TYPE Q FACE SIGNAL UNITS.

ISSUED:	STANDARD DETAIL	DETAIL NO.
7/89	TYPE VI MOUNTING ASSEMBLY	T 904
REVISED: 11/04		SHEET 2 OF 2

TS9-4-2.DWG 12/07/00 13:36

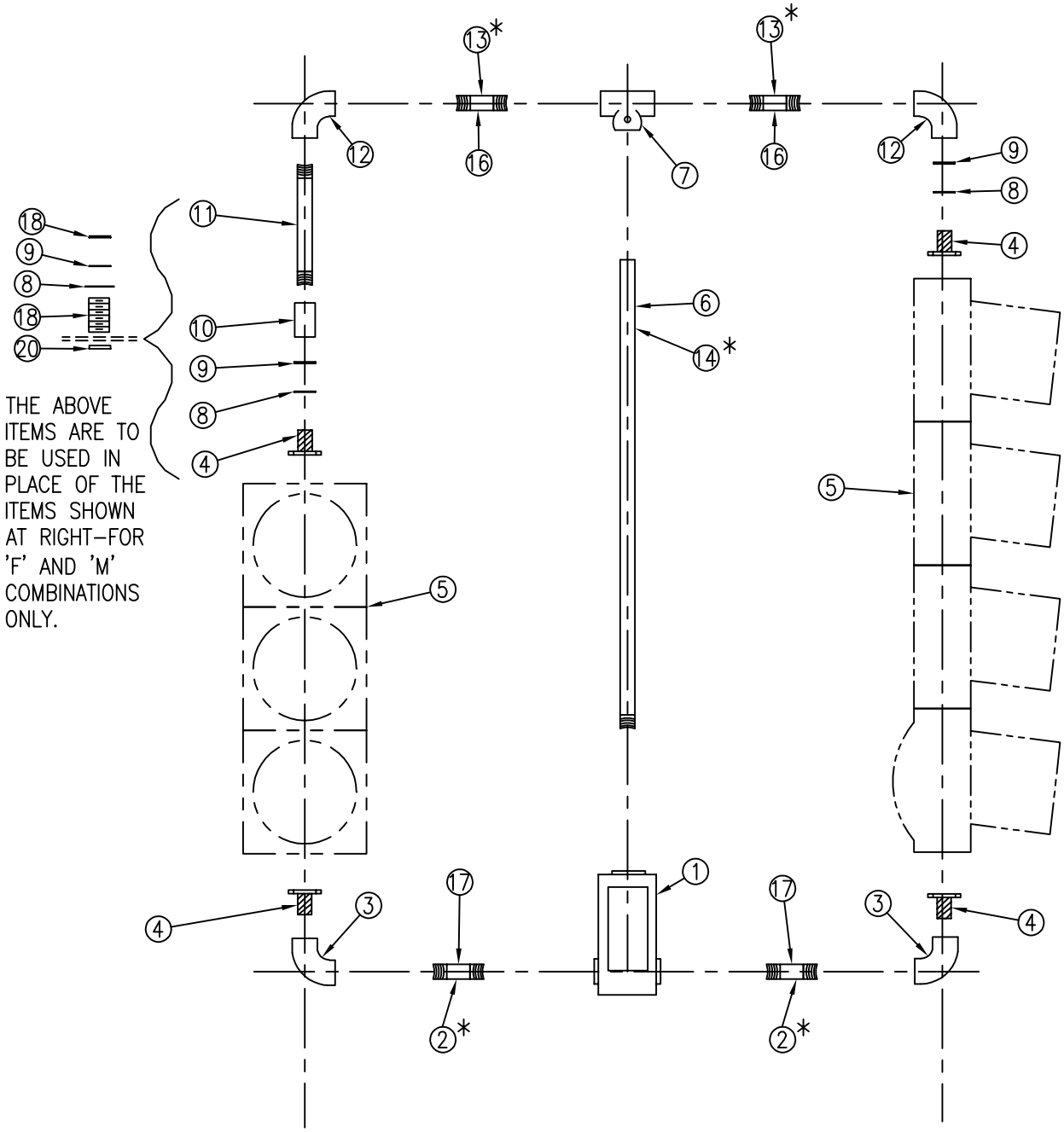

ISSUED:		STANDARD DETAIL		DETAIL NO.
7/89		TYPE VII MOUNTING ASSEMBLY		T 905
REVISED:				
11/04				SHEET 1 OF 2

TS9–5–1.DWG 12/07/00 13:41

	LIST OF MATERIAL	
ITM.	QUA.	DESCRIPTION
1	1	TERMINAL COMPARTMENT FOR SIDE MTG. (T1004-1)
* 2	2	1-1/2" (38 mm) PIPE NIPPLE, 11-1/2" (292 mm) LONG (FOR PED. SIGNAL HEADS)
3	2	90° ELBOW WITH LOCKING DEVICE (T1001-2)
4	4	1-1/2" (38 mm) LOCK NIPPLE, SEE NOTE 1
5	2	SIGNAL HEAD, SEE PLANS
6	2	CENTER PIPE, SEE TABLE
7	2	TEE, DRILL AND TAP FOR SETSCREW
8	1	NEOPRENE WASHER
9	1	FLAT WASHER
10	1	1-1/2" (38 mm) PIPE COUPLING, SEE TABLE
11	2	1-1/2" (38 mm) PIPE NIPPLE, SEE TABLE
12	2	90° ELBOW
* 13	1	1-1/2" (38 mm) PIPE NIPPLE, 12" (305 mm) LONG (FOR PED. SIGNAL HEADS)
* 14	2	1-1/2" (38 mm) PIPE NIPPLE, 9-1/2" (242 mm) LONG. (FOR PED SIGNAL HEADS
15	1	1/2" X 2" (13 mm X 50 mm) GALV. STEEL BOLT 13-UNC W/ FLAT WASHER & LOCK WASHER
16	2	1-1/2" (38 mm) PIPE NIPPLE, 16-1/2" (418 mm) LONG
17	2	1-1/2" (38 mm) PIPE NIPPLE, 16" (405 mm) LONG
18	1	CONDUIT LOCK NUT (FOR 'F' AND 'M' COMBINATION)
19	1	1-1/2" (38 mm) PIPE NIPPLE, 3" (75 mm) LONG (FOR 'F' AND 'M' COMBINATION ONLY)
20	1	MALLEABLE HEX NUT (FOR 'F' AND 'M' COMBINATION ONLY)

(ITEM 11)

SIGNAL FACES COMBINATION	C	F	M	N	G
C	ø	12-7/8"(327 mm)	13-3/4"(349 mm)	18-3/8"(465 mm)	27-5/8"(701 mm)
J	3-5/8"(92 mm)	8-1/4"(209 mm)	9-1/8"(232 mm)	13-3/4"(349 mm)	23"(585 mm)
F	12-7/8"(327 mm)	N/A	3"(75 mm)	4-1/2"(115 mm)	13-3/4"(349 mm)
M	13-3/4"(349 mm)	3"(75 mm)	N/A	3-5/8"(92 mm)	12-7/8"(327 mm)
N	18-3/8"(465 mm)	4-1/2"(115 mm)	3-5/8"(92 mm)	N/A	8-1/4"(209 mm)
G	27-5/8"(701 mm)	13-3/4"(349 mm)	12-7/8"(327 mm)	8-1/4"(209 mm)	N/A

TABLES TO BE USED FOR FINDING NIPPLE LENGTHS

(ITEM 6)

SIGNAL FACES COMBINATION	C	F	M	N	G
C	24" (610 mm)	37-7/8"(962 mm)	38-3/4" (984 mm)	43-3/8" (1.105 m)	52-5/8" (1.336 m)
J	28-5/8"(726 mm)	37-7/8"(962 mm)	38-3/4" (984 mm)	43-3/8" (1.105 m)	52-5/8" (1.336 m)
F	37-7/8"(962 mm)	37-7/8"(962 mm)	38-3/4"(984 mm)	43-3/8" (1.105 m)	52-5/8" (1.336 m)
M	38-3/4"(984 mm)	38-3/4"(984 mm)	38-3/4"(984 mm)	43-3/8" (1.105 m)	52-5/8" (1.336 m)
N	43-3/8"(1.105 m)	43-3/8"(1.105 m)	43-3/8"(1.105 m)	43-3/8" (1.105 m)	52-5/8" (1.336 m)
G	52-5/8"(1.336 m)	52-5/8"(1.336 m)	52-5/8"(1.336 m)	52-5/8" (1.336 m)	52-5/8" (1.336 m)

THREADS ON ONE END ONLY

NOTES:

1. LOCK NIPPLE LENGTHS SHALL BE 1-1/8" (28 mm) FOR 8" (205 mm) HEAD AND 1-3/4" (44 mm) FOR 12" (305 mm) HEAD.
2. FOR POLE DRILLING DETAIL, SEE T 418.

* SPECIAL NIPPLE LENGTH FOR USE ONLY WITH PED. SIGNAL SINGLE HEAD UNITS AND TYPE Q SIGNAL UNITS.

ISSUED:	STANDARD DETAIL	DETAIL NO.
7/89	TYPE VII MOUNTING ASSEMBLY	T 905
REVISED: 11/04		SHEET 2 OF 2

TS9-5-2.DWG 12/07/00 13:41

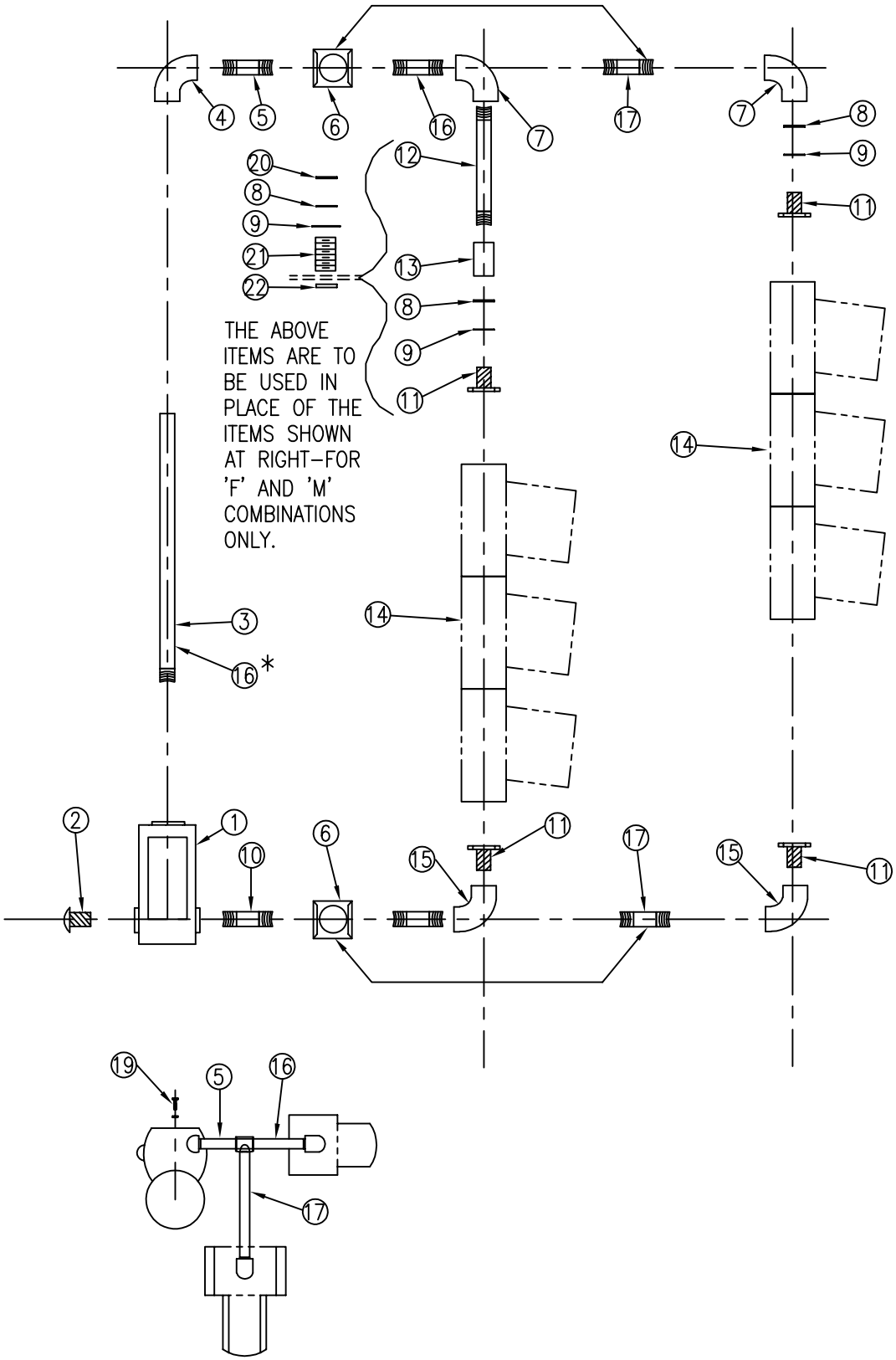

ISSUED:		STANDARD DETAIL		DETAIL NO.
7/89		TYPE VIII MOUNTING ASSEMBLY		T 906
REVISED:				
11/04				SHEET 1 OF 2

TS9–6–1.DWG 12/07/00 13:45

LIST OF MATERIAL		
ITM.	QUA.	DESCRIPTION
1	1	TERMINAL COMPARTMENT FOR SIDE MTG. (1004-1)
2	1	ORNAMENTAL CAP (SEE T1001-6)
3	1	1-1/2" (38 mm) PIPE, SEE TABLE
4	1	1-1/2" (38 mm) 90° ELBOW, DRILL AND TAP FOR SETSCREW
5	1	1-1/2" (38 mm) I.D. PIPE NIPPLE, 12-1/2" (318 mm) LONG
6	1	1-1/2" (38 mm) PIPE TEE
7	2	90° ELBOW
8	2	FLAT WASHER
9	2	NEOPRENE WASHER
10	1	1-1/2" (38 mm) I.D. PIPE NIPPLE, 12" (305 mm) LONG
11	4	1-1/2" (38 mm) LOCK NIPPLE, SEE NOTE 1
12	1	1-1/2" (38 mm) I.D. PIPE NIPPLE, SEE TABLE
13	1	1-1/2" (38 mm) COUPLING, AS REQUIRED
14	2	SIGNAL HEAD, SEE PLANS
15	2	90° ELBOW WITH LOCKING DEVICE (SEE T1001-2)
16	2	1-1/2" (38 mm) I.D. PIPE NIPPLE, 12" (305 mm) LONG
17	2	1-1/2" (38 mm) I.D. PIPE NIPPLE, 12" (305 mm) LONG
* 18	1	1-1/2" (38 mm) PIPE NIPPLE, 9-1/2" (242 mm) LONG, PED SIGNAL ONLY
19	2	1/2" X 2" (13 mm X 50 mm) GALV. STEEL BOLT 13-UNC W/ FLAT AND LOCK WASHER
20	1	CONDUIT LOCK NUT (FOR 'F' & 'M' COMBINATION ONLY)
21	1	1-1/2" (38 mm) I.D. PIPE NIPPLE, 3" (75 mm) LONG (FOR 'F' & 'M' COMB. ONLY)
22	1	MALLEABLE HEX NUT (FOR 'F' AND 'M' COMBINATION ONLY)

TABLES TO BE USED FOR FINDING NIPPLE LENGTHS
(ITEM 12)

SIGNAL FACES COMBINATION	C	J	F	M	N	G
C	NA	3-5/8" (92 mm)	12-7/8" (327 mm)	13-3/4" (349 mm)	18-3/8" (465 mm)	27-5/8" (701 mm)
J	3-5/8" (92 mm)	NA	8-1/4" (209 mm)	9-1/8" (232 mm)	13-3/4" (349 mm)	23" (585 mm)
F	12-7/8" (327 mm)	8-1/4" (209 mm)	NA	3" (75 mm)	4-1/2" (115 mm)	13-3/4" (349 mm)
M	13-3/4" (349 mm)	9-1/8" (232 mm)	3" (75 mm)	NA	3-5/8" (92 mm)	12-7/8" (327 mm)
N	18-3/8" (465 mm)	13-3/4" (349 mm)	4-1/2" (115 mm)	3-5/8" (92 mm)	NA	8-1/4" (209 mm)
G	27-5/8" (701 mm)	23" (584 mm)	13-3/4" (349 mm)	12-7/8" (327 mm)	8-1/4" (209 mm)	NA

NIPPLE LENGTH
(ITEM 3)

SIGNAL FACE	C	J	F	M	N	G
NIPPLE LENGTH	24" (610 mm)	28-5/8" (726 mm)	37-7/8" (962 mm)	38-3/4" (984 mm)	43-3/8" (1.105 m)	52-5/8" (1.336 m)

NOTES:

1. LOCK NIPPLE LENGTH SHALL BE 1-1/8" (28 mm) FOR 8" (205 mm) HEADS AND 1-3/4" (44 mm) FOR 12" (305 mm) HEADS.
2. FOR PIPE DRILLING DETAIL SEE T 418.

* SPECIAL NIPPLE LENGTH FOR USE ONLY WITH PED. SIGNAL SINGLE HEAD UNITS AND TYPE Q FACE SIGNAL UNITS.

ISSUED:		STANDARD DETAIL		DETAIL NO.
7/89	CITY OF TUCSON FOUNDED 1775	TYPE VIII MOUNTING ASSEMBLY	THE SEAL of PIMA COUNTY ARIZONA	T 906
REVISED: 11/04				SHEET 2 OF 2

TS9-6-2.DWG 12/07/00 13:46

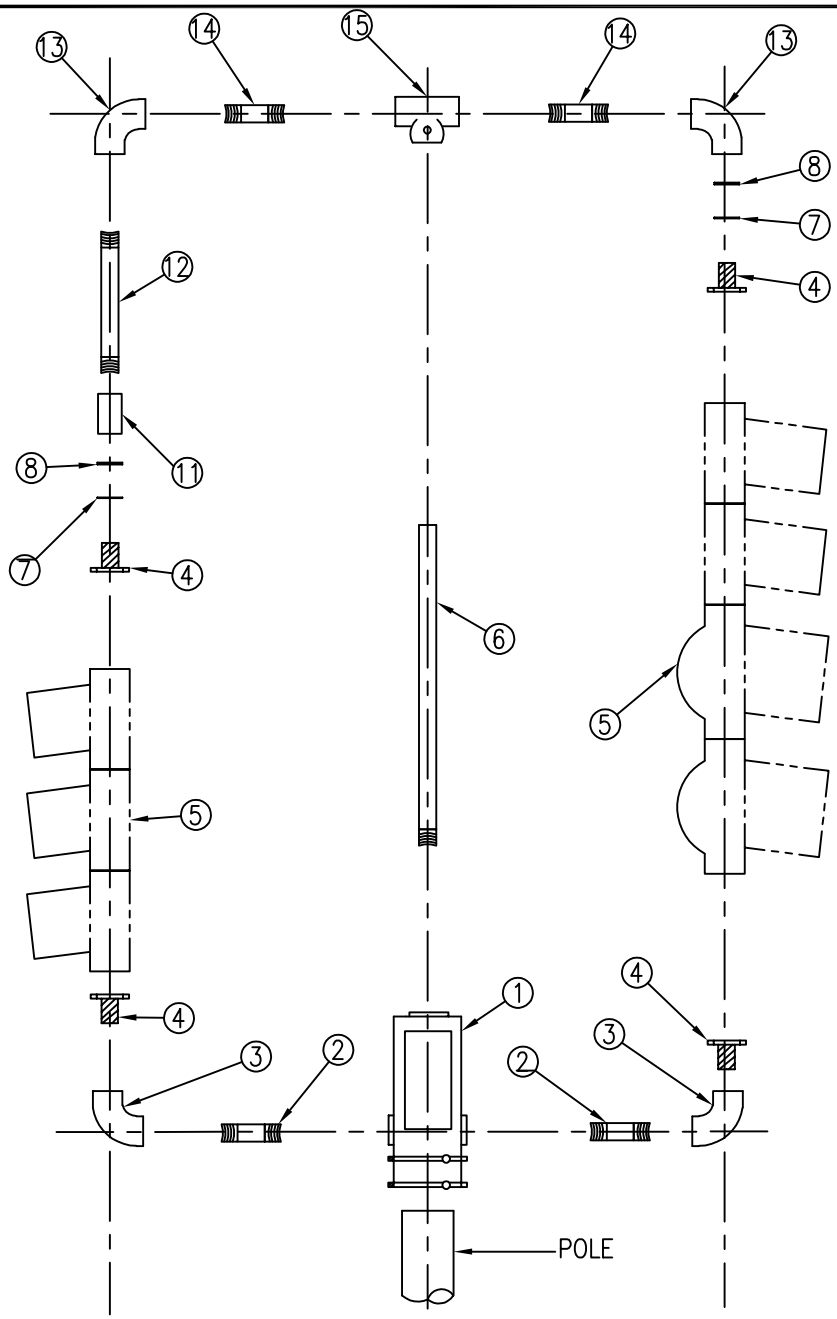

FRONT ELEVATION

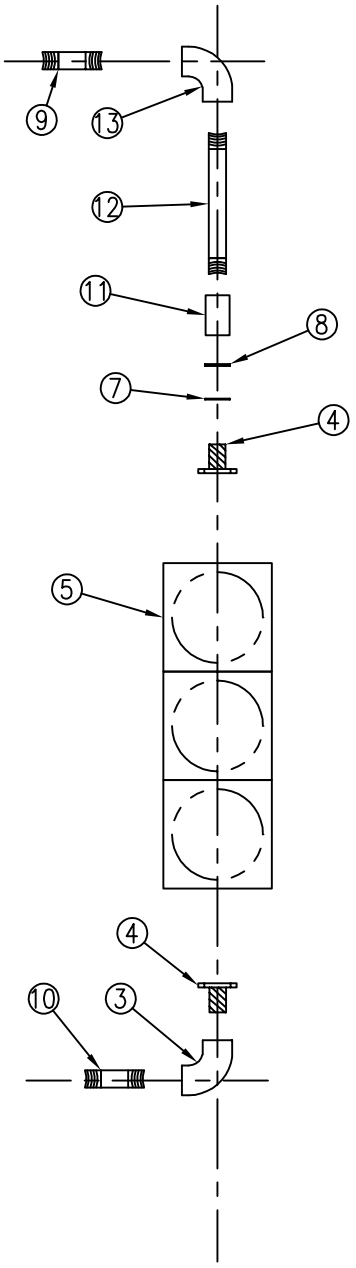

SIDE ELEVATION

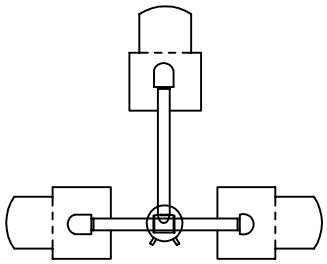

MOUNTING ORIENTATION PLAN

ISSUED:		STANDARD DETAIL		DETAIL NO.
7/89		TYPE IX MOUNTING ASSEMBLY		T 907
REVISED:				
10/02				SHEET 1 OF 2

TS9-7-1.DWG 12/07/00 14:31

LIST OF MATERIAL		
ITM.	QUA.	DESCRIPTION
1	1	TERMINAL COMPARTMENT POLE TOP MTG. T1004-2
2	2	1-1/2" (38 mm) I.D. PIPE NIPPLE, 6" (150 mm) LONG
3	2	90° ELBOW WITH LOCKING DEVICE (SEE T1001-2)
4	4	1-1/2" (38 mm) LOCK NIPPLE, SEE NOTE 1 AND NOTE 2
5	2	SIGNAL HEAD, SEE PLANS
6	2	1-1/2" (38 mm) PIPE, SEE TABLE
7	2	NEOPRENE WASHER
8	1	FLAT WASHER
9	1	1-1/2" (38 mm) PIPE NIPPLE, 12-1/2" (318 mm) LONG
10	1	1-1/2" (38 mm) PIPE NIPPLE, 12" (305 mm) LONG
11	2	1-1/2" (38 mm) PIPE COUPLING AS REQUIRED
12	2	1-1/2" (38 mm) PIPE NIPPLE, SEE TABLE
13	1	90° ELBOW
14	2	1-1/2" (38 mm) PIPE NIPPLE, 6-1/2" (165 mm) LONG
15	1	TEE WITH SIDE OUTLET, DRILL AND TAP FOR SETSCREW

TABLE TO BE USED FOR FINDING NIPPLE LENGTH

(USE FOR ITEM 12 ONLY)

SIGNAL FACES COMBINATION	C	J	F	M	N	G
C	NA		12-7/8"(327 mm)	13-3/4"(349 mm)	18-3/8"(465 mm)	27-5/8"(701 mm)
J	3-5/8"(92 mm)		8-1/4" (209 mm)	9-1/8"(232 mm)	13-3/4"(349 mm)	23"(585 mm)
F	12-7/8"(327 mm)		NA	3"(75 mm)	4-1/2"(115 mm)	13-3/4"(349 mm)
M	13-3/4"(349 mm)		3"(75 mm)	NA	3-5/8"(92 mm)	12-7/8"(327 mm)
N	18-3/8"(465 mm)		4-1/2"(115 mm)	3-5/8" (92 mm)	NA	8-1/4"(209 mm)
G	27-5/8"(701 mm)		13-3/4"(349 mm)	12-7/8"(327 mm)	8-1/4"(209 mm)	NA

NIPPLE LENGTH
(ITEM 3)

SIGNAL FACE	C		F	M	N	G
NIPPLE LENGTH	24"(610 mm)		37-7/8"(962 mm)	38-3/4"(984 mm)	43-3/8"(1.105 m)	52-5/8"(1.336 m)

THREADS ON ONE END ONLY

NOTES:

1. LOCK NIPPLE LENGTH SHALL BE 1-1/8" (28 mm) FOR 8" (205 mm) HEADS AND 1-3/4" (44 mm) FOR 12" (305 mm) HEADS.
2. LOCK NUT IS REQUIRED IN PLACE OF LOCK NIPPLE WHEN 'F' FACE AND 'M' FACE ARE HUNG ON SAME FRAME.

ISSUED:	STANDARD DETAIL	DETAIL NO.
7/89	TYPE IX MOUNTING ASSEMBLY	T 907
REVISED: 11/04		SHEET 2 OF 2

TS9-7-2.DWG 12/07/00 14:31

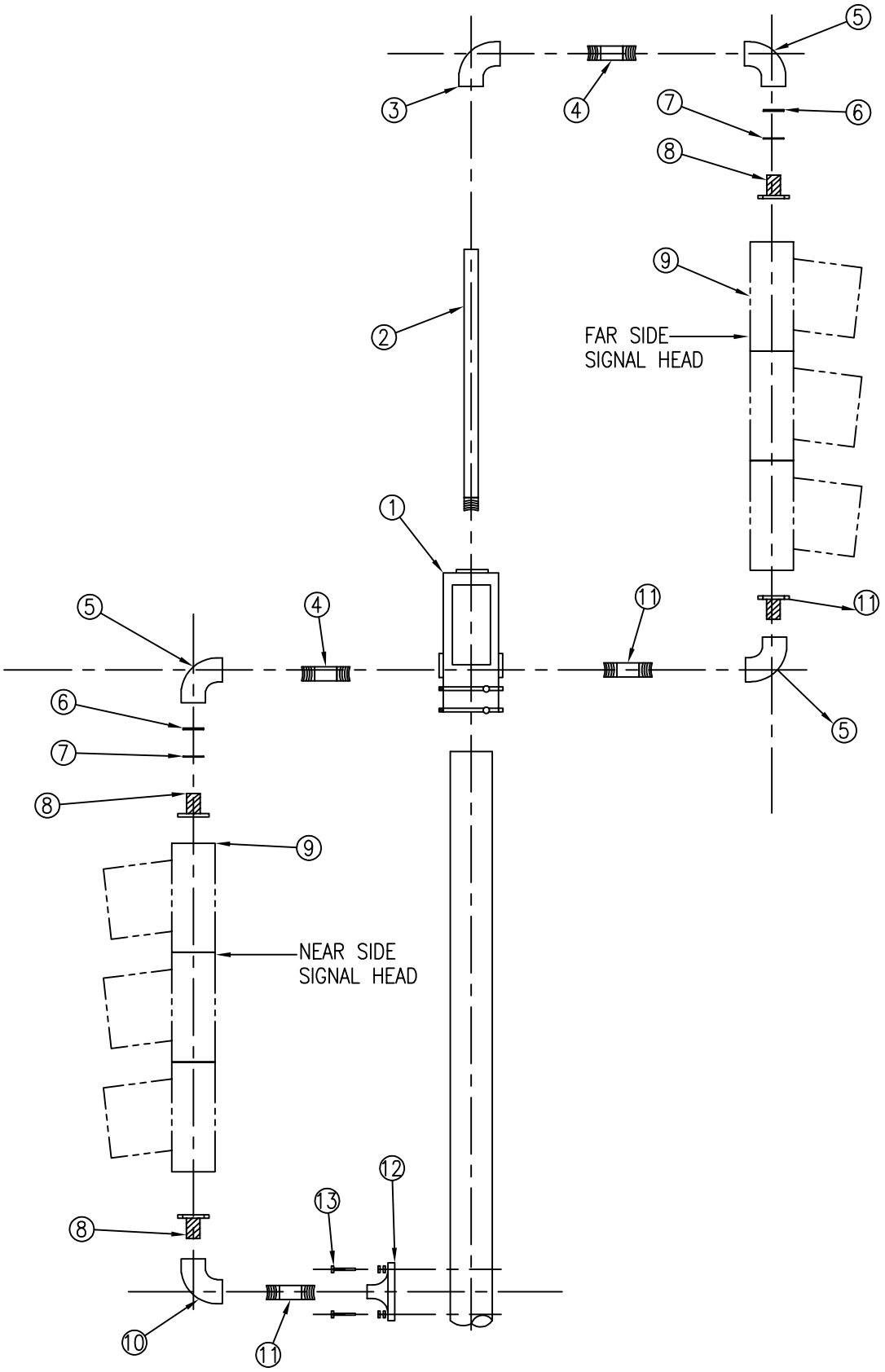

ISSUED:		STANDARD DETAIL		DETAIL NO.
7/89		TYPE X MOUNTING ASSEMBLY		T 908
REVISED:				
10/02				SHEET 1 OF 2

TS9-8-1.DWG 12/07/00 14:32

LIST OF MATERIAL		
ITM.	QUA.	DESCRIPTION
1	1	POLE TOP MOUNTED TERMINAL COMPARTMENT T1004-2
2	1	CENTER PIPE, 1-1/2" X 38" (38 mm X 965 mm) THREADED ONE END
3	1	ELBOW, 1-1/2" (38 mm), 90°, REAMED, DRILLED, AND TAPPED FOR SCREW
4	2	NIPPLE, 1-1/2" X 14-1/2" (38 mm X 368 mm)
5	2	ELBOW, 1-1/2" (38 mm), 90° (3 REQ'D WHEN OPTICAL SIGNAL USED)
6	2	FLAT WASHER
7	2	NEOPRENE WASHER
8	4	LOCK NIPPLE, 1-1/2" (38 mm), SEE NOTE No. 1
9	2	SIGNAL HEAD, SEE PLANS
10	2	ELBOW, 1-1/2" (38 mm), 90°, WITH LOCKING DEVICE
11	2	NIPPLE, 1-1/2" X 14" (38 mm X 355 mm)
12	1	POLE PLATE (T1003-2)
13	2	1/2" X 2" (13 mm X 50 mm) GALV. STEEL BOLT 13-UNC W/ FLAT AND LOCK WASHERS
14	2	CLOSE NIPPLE, 1-1/2" X 1-3/4" (38 mm X 44 mm)
15	1	PROGRAMMED VISIBILITY SIGNAL ASSEMBLY

* THIS ITEM IS NOT REQUIRED FOR PROGRAMMED VISIBILITY SIGNAL

(USE FOR ITEM 10 ONLY)

* SIGNAL FACE	C	J	F	M	N	G	H
NIPPLE LENGTH	24" (610 mm)		37-7/8" (962 mm)	38-3/4" (984 mm)		52-5/8" (1.336 m)	53-1/2" (1.359 m)

NOTES:

1. LOCK NIPPLE LENGTHS HALL BE 1-1/8" (28 mm) FOR 8" (205 mm) HEAD AND 1-3/4" (44 mm) FOR 12" (305 mm) HEAD

ISSUED:		STANDARD DETAIL		DETAIL NO.
7/89	CITY OF TUCSON FOUNDED 1775	TYPE X MOUNTING ASSEMBLY	THE SEAL of PIMA COUNTY ARIZONA	T 908
REVISED: 11/04				SHEET 2 OF 2

TS9-8-2.DWG 12/07/00 14:32

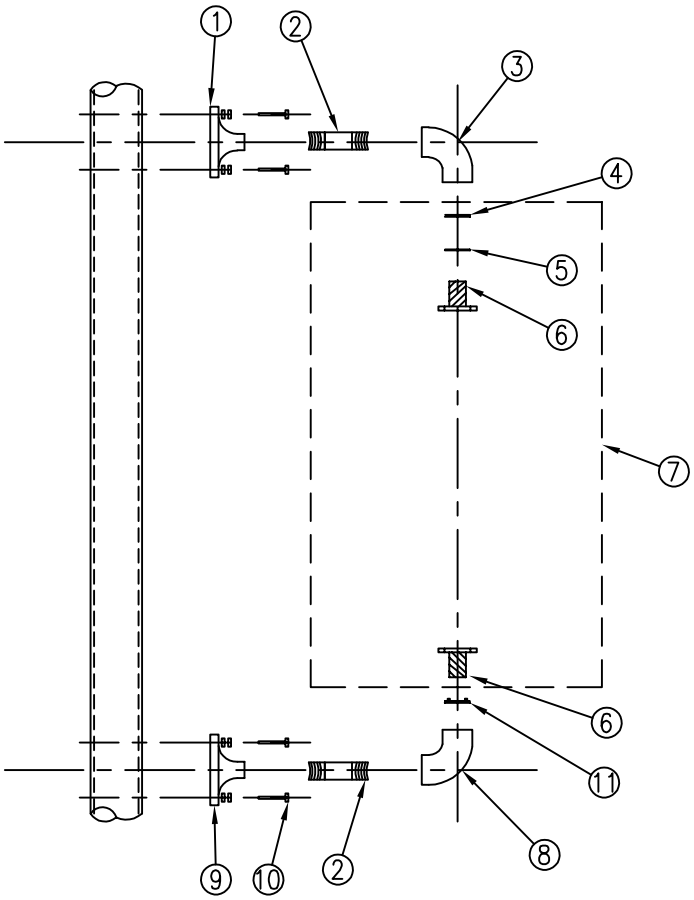

LIST OF MATERIAL		
ITM.	QUA.	DESCRIPTION
1	1	POLE PLATE (T1003-2)
2	2	1-1/2" (38 mm) PIPE NIPPLE, SEE TABLE BELOW
3	1	90° ELBOW
4	1	FLAT WASHER
5	1	NEOPRENE WASHER
6	2	LOCK NIPPLE, 1-1/8" (28 mm) LONG
7	1	SIGNAL HOUSING, SEE PLANS
8	1	90° ELBOW WITH LOCKING DEVICE (T1001-2)
9	1	POLE PLATE WITH WIRE GUIDE (T1003-1)
10	4	1/2" X 2" (13 mm X 50 mm) GALV. STEEL BOLT 13 UNC W/ FLAT AND LOCK WASHERS
11	1	LOCK RING USE ONLY WHEN ITEM 7 CONTAINS NO LOCKING TEETH
12	2	CLOSE NIPPLE T1001-5

NOTE: FOR POLE DRILLING DETAILS, SEE T 418

ISSUED:		STANDARD DETAIL		DETAIL NO.
7/89		TYPE XI MOUNTING ASSEMBLY		T 909
REVISED:				
11/04				SHEET 1 OF 1

TS9-9.DWG 12/07/00 14:32

NOTE: FOR ADAPTER RING SEE SHEET 2 OF T 910.

E DESIGNATES 1-1/2" (38 mm) PIPE THREAD TOP

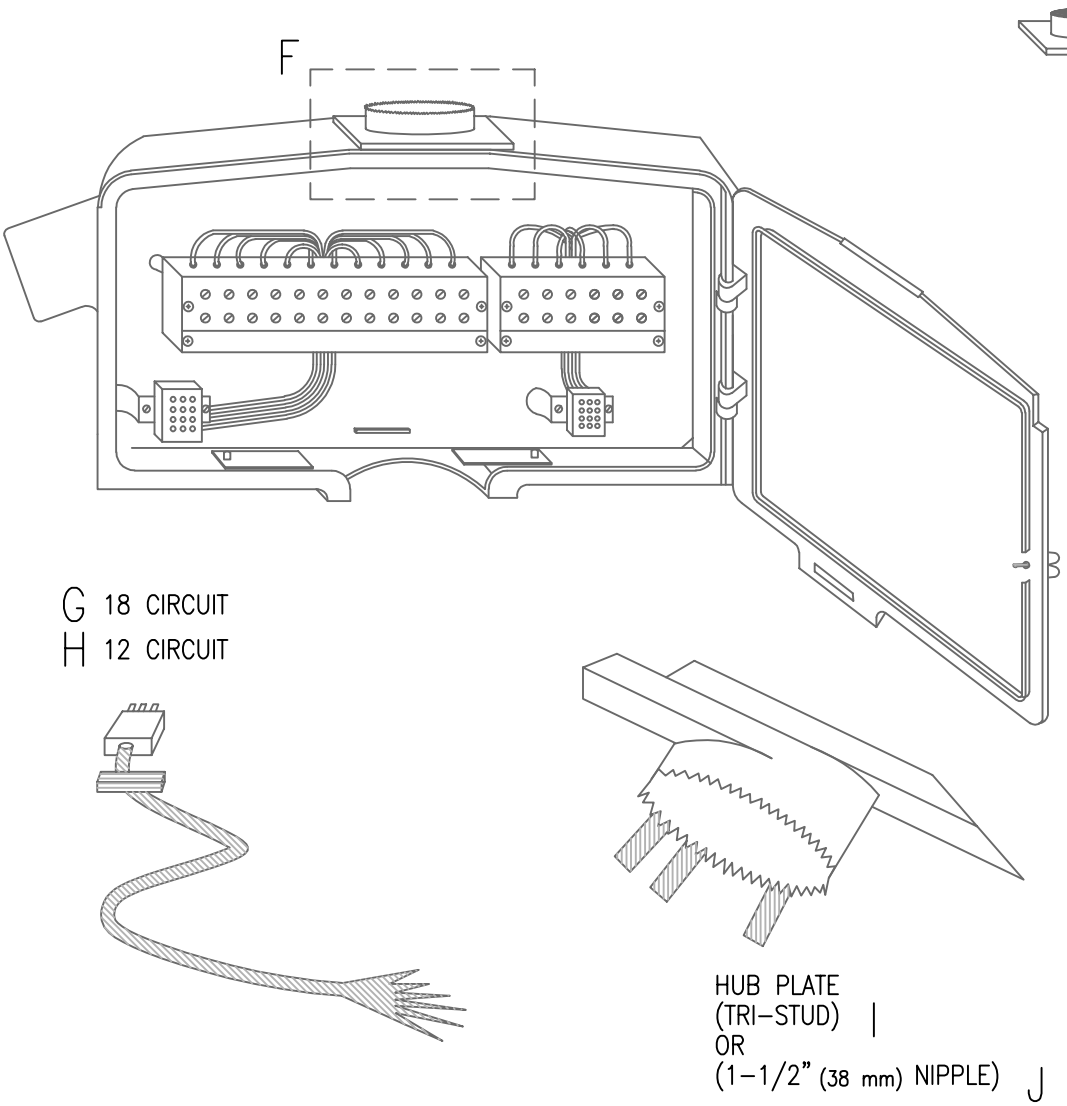

THE SINGLE DOOR DISCONNECT HOUSING CAN BE FURNISHED WITH 12 OF 18 TERMINAL CONNECTORS. THE HOUSING HAS THE SAME INTERNAL AREA AS THE DOUBLE DOOR DISCONNECT HOUSING THUS ALLOWING EASY ACCESS TO THE TERMINALS. CORRESPONDING PLUG IN CONNECTORS LEAD TO THE SIGNAL HEAD. THE HUB PLATE IS INTERCHANGEABLE TO TAKE EITHER THE TRI-STUB WITH CAST IN SHURLOCK SERRATIONS OR 1-1/2" (38 mm) NIPPLE ADAPTER. THE TOP OF THE HOUSING HAS THE SHURLOCK SERRATION TO MATE POSITIVELY WITH THE ADJUSTABLE HANGER. IN THE EVENT THAT A 1-1/2" (38 mm) PIPE IS USED FOR THE HANGER, THE TOP OF THE HOUSING CAN BE FURNISHED WITH A 1-1/2" (38 mm) HUB. THE SIDE ENTRANCE HOLES CAN RECEIVE A 1-1/2" (38 mm) PLASTIC REDUCER TO ADJUST TO VARIOUS WIRE DIAMETERS, THUS IMPROVING THE WATER TIGHTNESS. THE HOUSING HAS APPROXIMATELY 350 CUBIC INCH (0.0057 m^3) OF VOLUME. THE ENTIRE UNIT IS HIGH TENSILE CAST ALUMINUM WITH STAINLESS STEEL HARDWARE. MOVEMENT OF THE HUB PLATE IS PREVENTED BY TIGHT FITTING WEDGES ON THE HOUSING AND DOOR, PLUS TOW POSITIVE LATCHES.

ISSUED:		STANDARD DETAIL		DETAIL NO.
7/89	CITY OF TUCSON FOUNDED 1775	SPAN WIRE MOUNTING TERMINAL HANGER	THE SEAL of PIMA COUNTY ARIZONA	T 910
REVISED: 10/02				SHEET 1 OF 2

TS9-10-1.DWG 12/07/00 14:34

HANGER SHALL HAVE ADJUSTABLE IN 1" (25 mm) INCREMENTS ALLOWING QUICK INSTALLATION WITHOUT PIPE CUTTING THREADING AND RETHREADING.

THE LOWER HALF OF THE HANGER SHALL BE PROVIDED WITH A TRI-STUD ARRANGEMENT AND SHURLOCK SERRATION FOR POSITIVE LOCKING OR 1-1/2" (38 mm) PIPE NIPPLE.

THE UNIT SHALL BE FURNISHED COMPLETE WITH THE SAME MOUNTING HARDWARE AS WITH THE ADJUSTABLE SIGNAL HANGER.

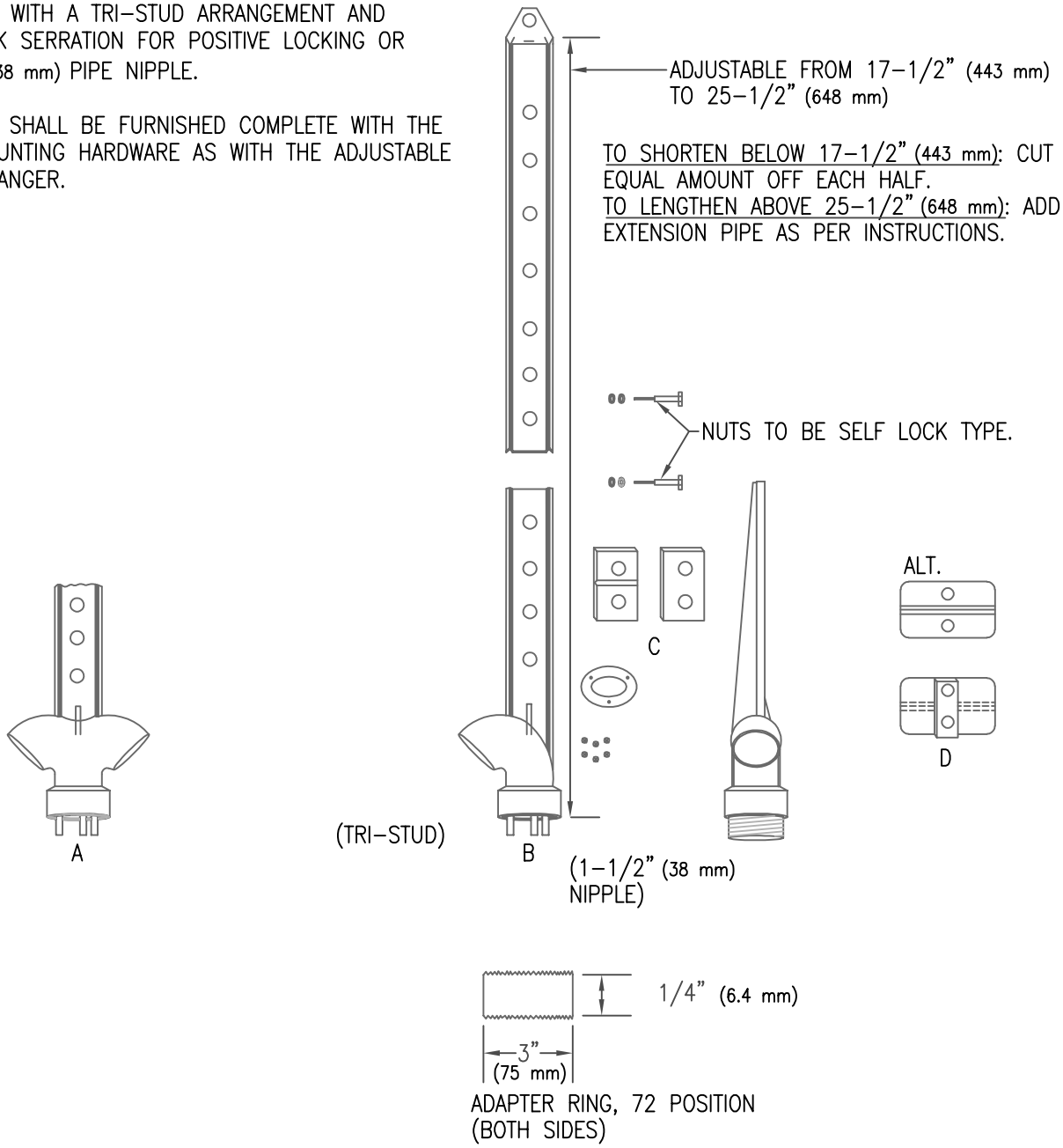

NOTE:

72 POSITION ADAPTER RING TO BE SUPPLIED WITH EACH ASSEMBLY.

ISSUED:		STANDARD DETAIL		DETAIL NO.
7/89		SPAN WIRE MOUNTING TERMINAL HANGER		T 910
REVISED:				
11/04				SHEET 2 OF 2

TS9-10-2.DWG 12/07/00 14:35

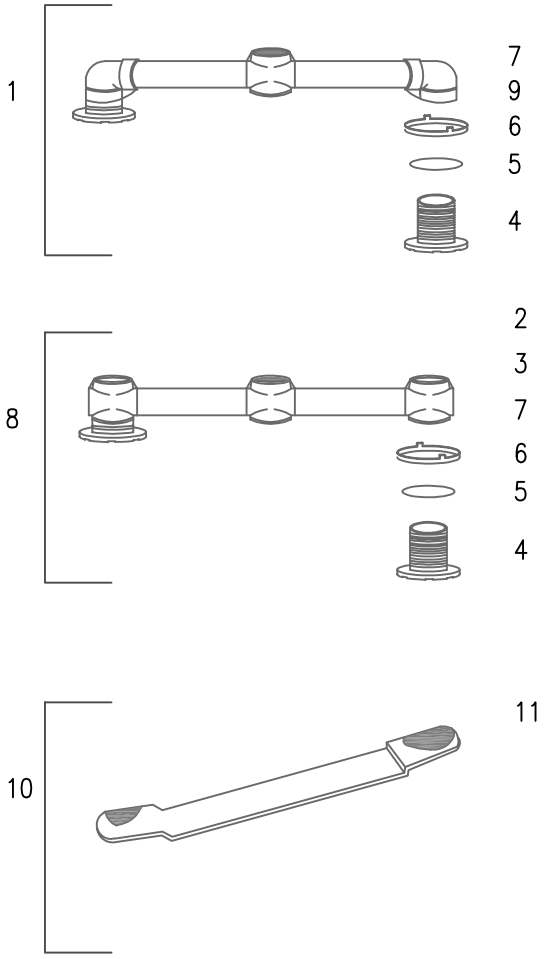

TWO WAY MOUNTING FOR
SPAN WIRE AND MAST ARM

ITEM	DESCRIPTION
1	UPPER ARM FOR 2-WAY WITH CROSSES
2	UNIVERSAL CROSS CONNECTOR
3	ROSETTE CAP
4	1-1/2" (38 mm) CAST NIPPLE
5	RUBBER O-RING
6	SERRATED LOCKING RING
7	SET SCREW, 1/4" (6.4 mm)-20 X 3/8" (9.5 mm) LONG, SQUARE HEAD, CUP POINT
8	UPPER ARM ASSEMBLY FOR 2-FACE SIGNAL
9	CABLE GUIDE ELBOW
10	LOWER FLAT ARM ASSEMBLY FOR 2-FACE SIGNAL
11	CENTERING WASHER ASSEMBLY

ISSUED:		STANDARD DETAIL		DETAIL NO.
7/89		2-WAY SPAN WIRE MOUNTING ASSEMBLY		T 911
REVISED:				
10/02				SHEET 1 OF 1

TS9-11.DWG 12/07/00 14:35

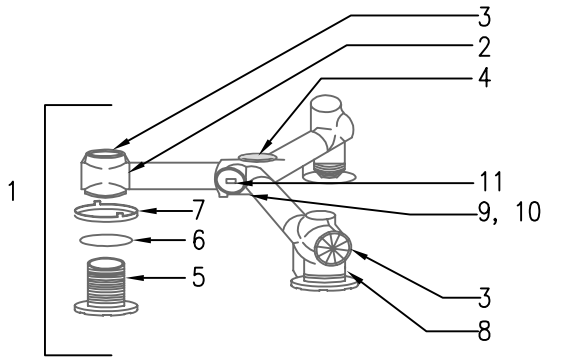

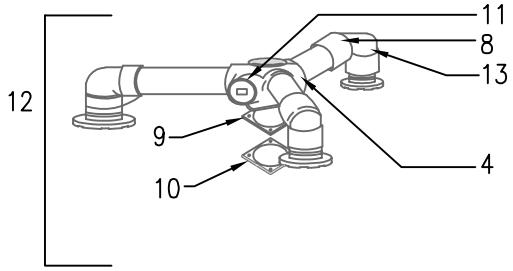

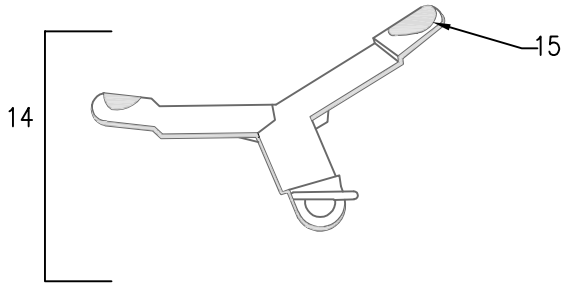

THREE- WAY MOUNTING FOR SPAN WIRE AND MAST ARM

ITEM	DESCRIPTION
1	UPPER ARM FOR 3-WAY WITH CROSSES
2	UNIVERSAL CROSS CONNECTOR
3	ROSETTE CAP
4	6-WAY CENTER SUPPORT WITH 1-1/2" (38 mm) HUBS
5	1-1/2" (38 mm) CAST NIPPLE
6	RUBBER O-RING
7	SERRATED LOCKING RING
8	SET SCREW, 1/4" (6.4 mm)-20 X 3.8" (9.5 mm) LONG, SQUARE HEARD, CUP POINT
9	COVER GASKET
10	BLANKET COVER
11	1-1/2" (38 mm) PIPE PLUG
12	UPPER ARM ASSEMBLY FOR 3-FACE SIGNAL
13	CABLE GUIDE ELBOW
14	LOWER FLAT ARM ASSEMBLY FOR 3-FACE SIGNAL
15	CENTERING WASHER ASSEMBLY

ISSUED:		STANDARD DETAIL		DETAIL NO.
7/89	CITY OF TUCSON FOUNDED 1775	3-WAY SPAN WIRE MOUNTING ASSEMBLY	THE SEAL of PIMA COUNTY ARIZONA	T 912
REVISED: 10/02				SHEET 1 OF 1

TS9-12.DWG 12/07/00 14:36

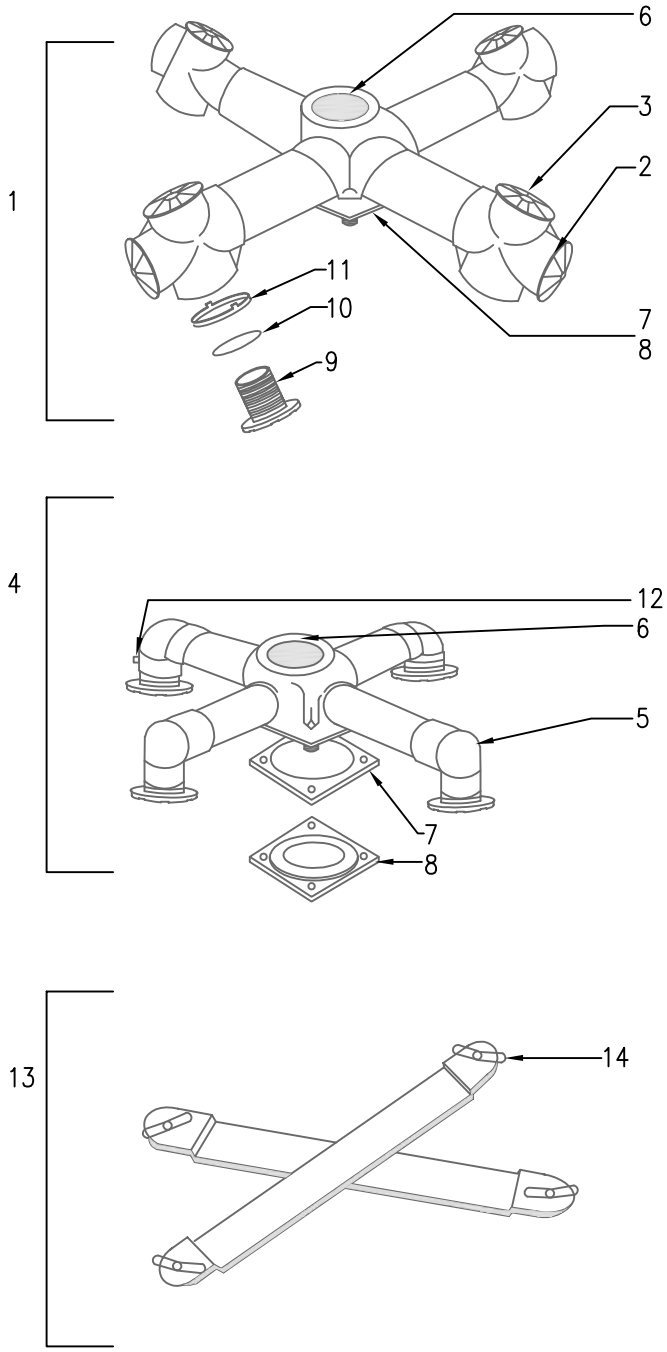

FOUR–WAY MOUNTING FOR
SPAN WIRE AND MAST ARM

ITEM	DESCRIPTION
1	UPPER ARM FOR 4–WAY WITH CROSSES
2	UNIVERSAL CROSS CONNECTOR
3	ROSETTE CAP
4	UPPER ARM ASSEMBLY FOR 4–FACE SIGNAL
5	CABLE GUIDE ELBOW
6	4–WAY CENTER SUPPORT WITH 1–1/2" (38 mm) HUBS
7	COVER GASKET
8	BLANK COVER
9	1–1/2" (38 mm) CAST NIPPLE
10	RUBBER O–RING
11	SERRATED LOCKING RING
12	SET SCREW. 1/4" (6.4 mm)–20 X 3/8" (9.5 mm) LONG, SQUARE HEAD, CUP POINT
13	LOWER FLAT ARM ASSEMBLY FOR 4–FACE SIGNAL
14	CENTERING WASHER ASSEMBLY

ISSUED:		STANDARD DETAIL		DETAIL NO.
7/89	CITY OF TUCSON FOUNDED 1775	4-WAY SPAN WIRE MOUNTING ASSEMBLY	THE SEAL of PIMA COUNTY ARIZONA	T 913
REVISED: 10/02				SHEET 1 OF 1

TS9–13.DWG 12/07/00 14:37

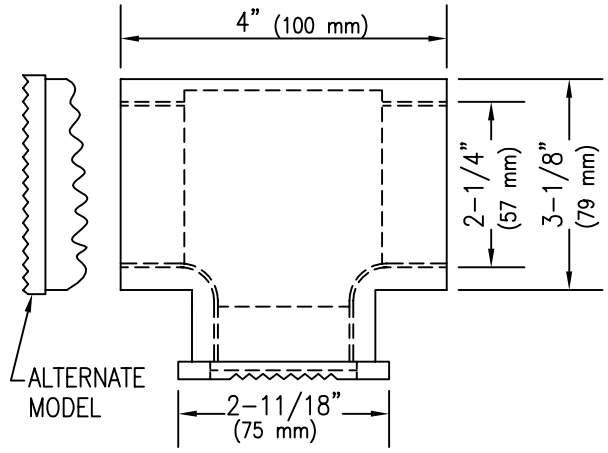

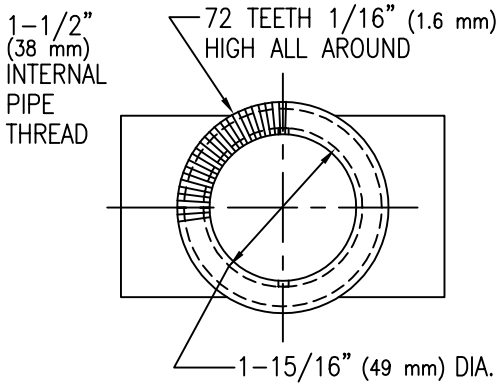

-1 TEE WITH LOCKING DEVICE

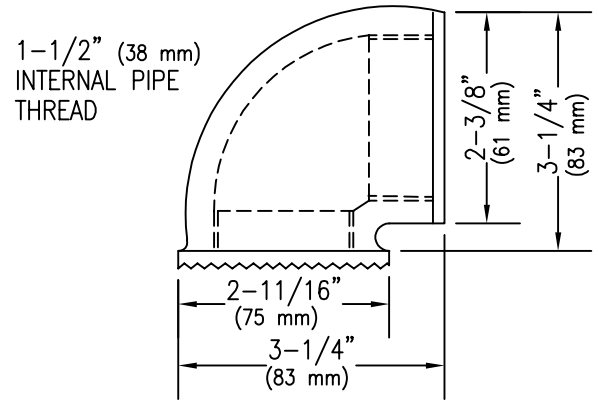

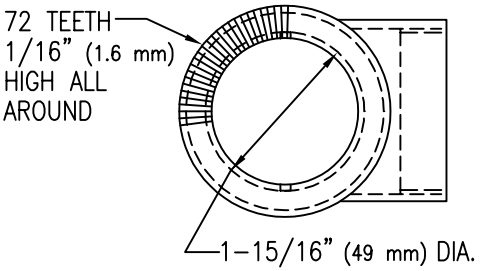

-2 ELBOW WITH LOCKING DEVICE

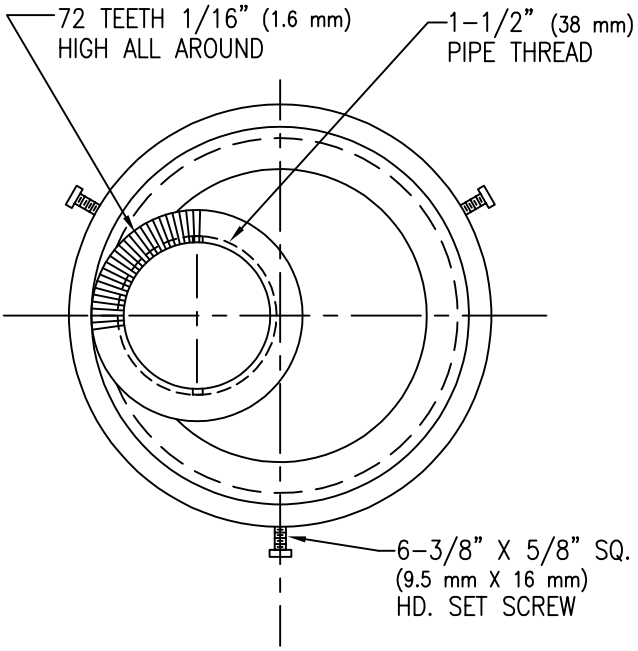

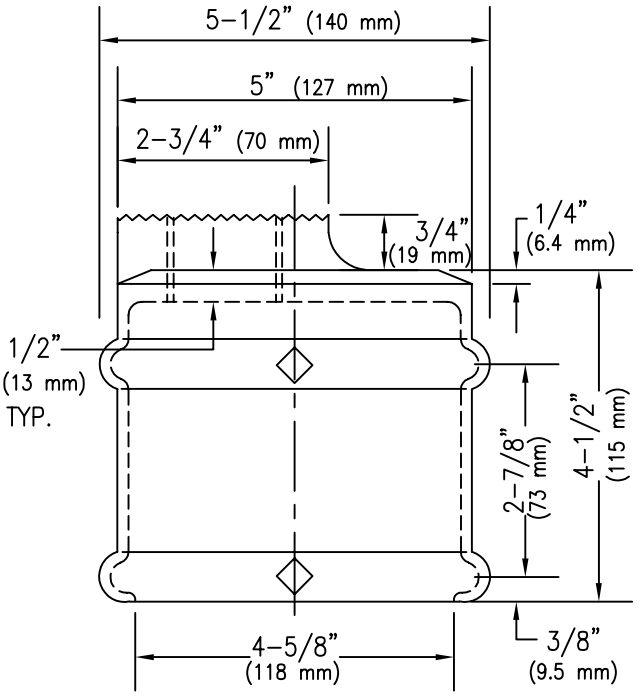

-3 POLE TOP BRACKET

ISSUED:		STANDARD DETAIL		DETAIL NO.
8/92	CITY OF TUCSON FOUNDED 1775	MISCELLANEOUS SIGNAL MOUNTING PARTS	THE SEAL of PIMA COUNTY ARIZONA	T 1001
REVISED: 10/02				SHEET 1 OF 2

TS10-1-1.DWG 12/07/00 14:40

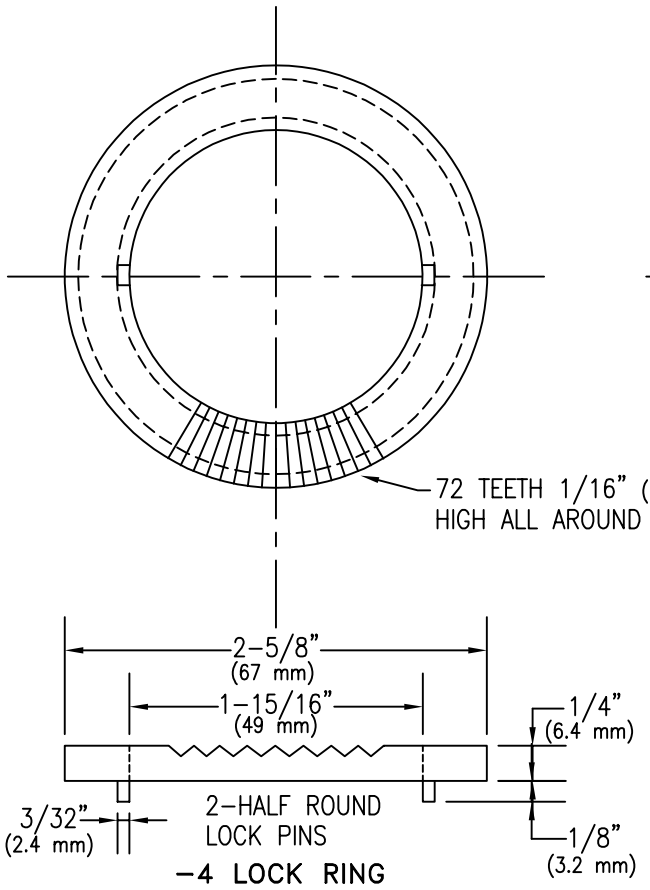

-4 LOCK RING

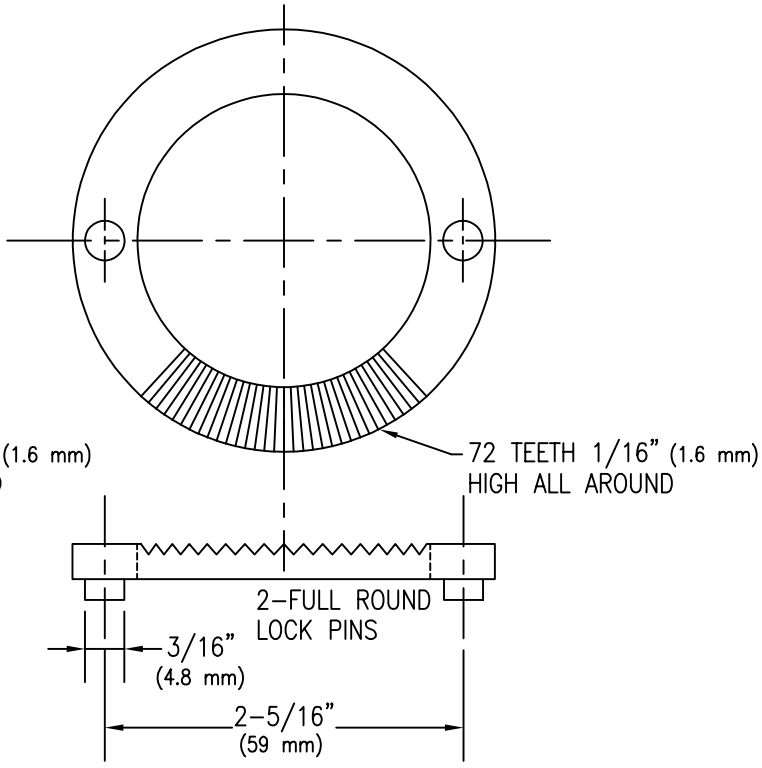

-5 LOCK RING

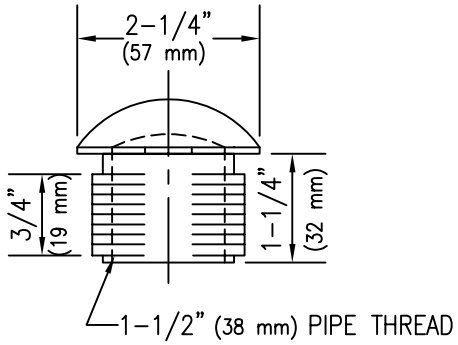

NOTES:

1. MATERIAL
   - -1 TEE, FERROUS
   - -2 ELBOW, FERROUS
   - -3 BRACKET, BRONZE
   - -4 LOCK RING, BRONZE
   - -5 CAP, ALUMINUM
2. PAINT FINISH TO BE FEDERAL YELLOW UNLESS OTHERWISE SPECIFIED

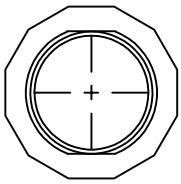

-6 ORNAMENTAL CAP

ISSUED:		STANDARD DETAIL		DETAIL NO.
8/92	CITY OF TUCSON FOUNDED 1775	MISCELLANEOUS SIGNAL MOUNTING PARTS	THE SEAL of PIMA COUNTY ARIZONA	T 1001
REVISED: 10/02				SHEET 2 OF 2

TS10-1-2.DWG 12/07/00 14:41

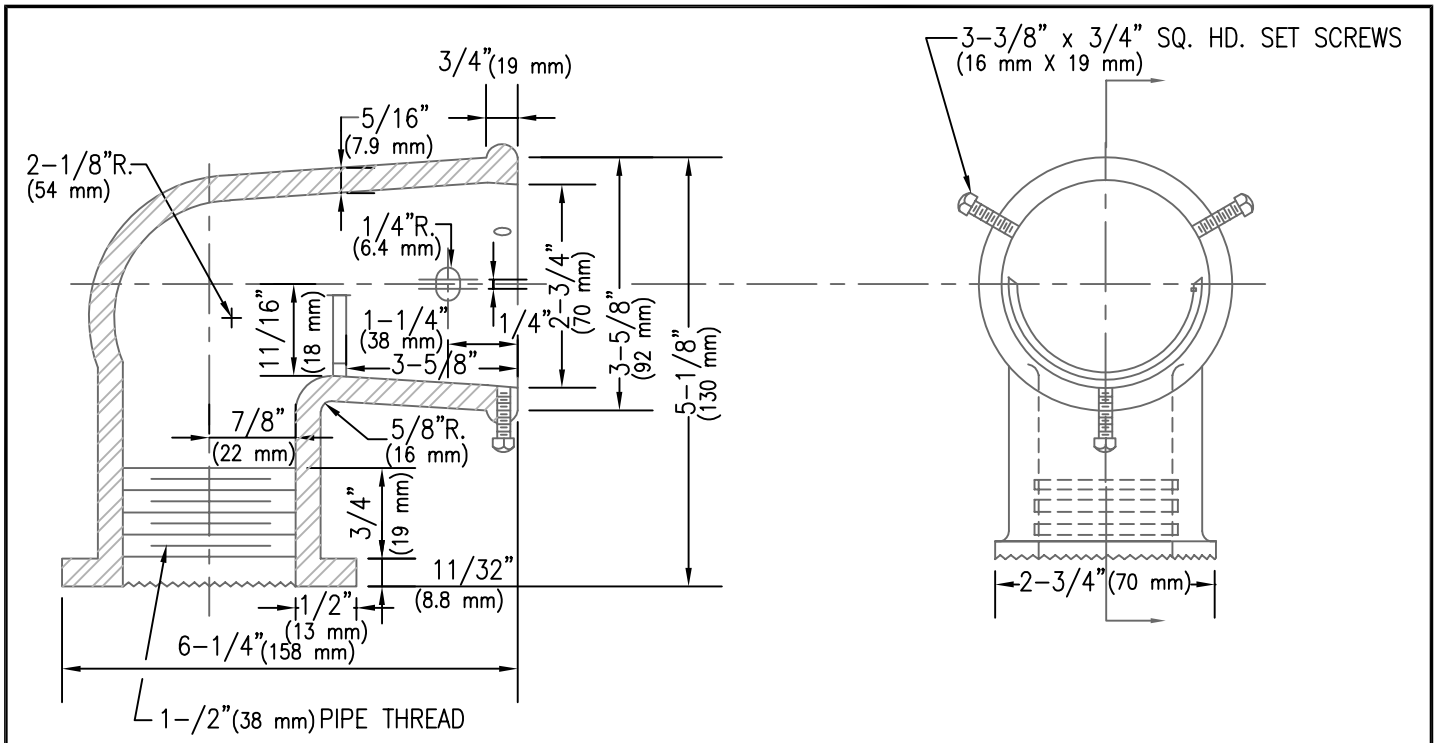

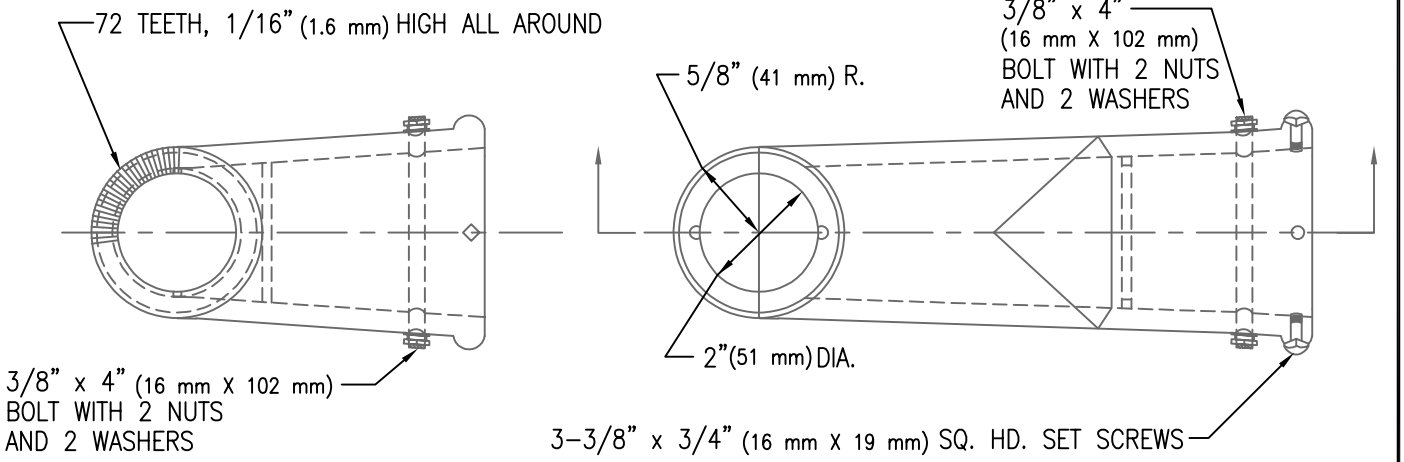

PLUMBIZER

NOTES:

1. MATERIAL – BRONZE
2. PAINT FINISH TO BE FEDERAL YELLOW UNLESS OTHERWISE SPECIFIED.

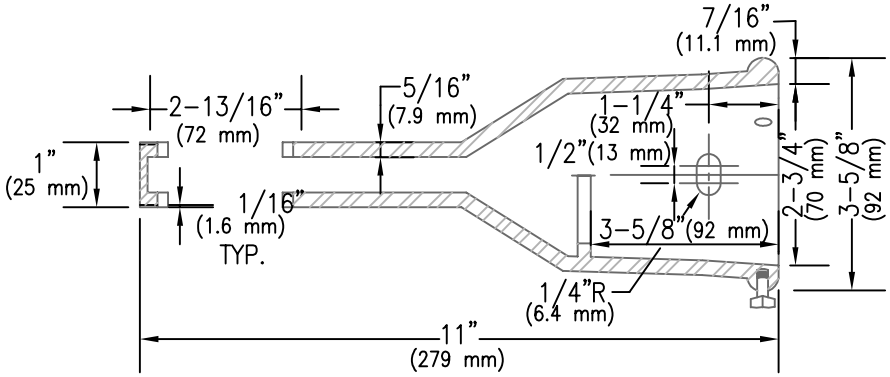

ELEVATOR PLUMBIZER

ISSUED:		STANDARD DETAIL		DETAIL NO.
8/92		MAST ARM PLUMBIZER		T 1002
REVISED:				
10/02				SHEET 1 OF 1

TS10-2.DWG 12/07/00 14:41

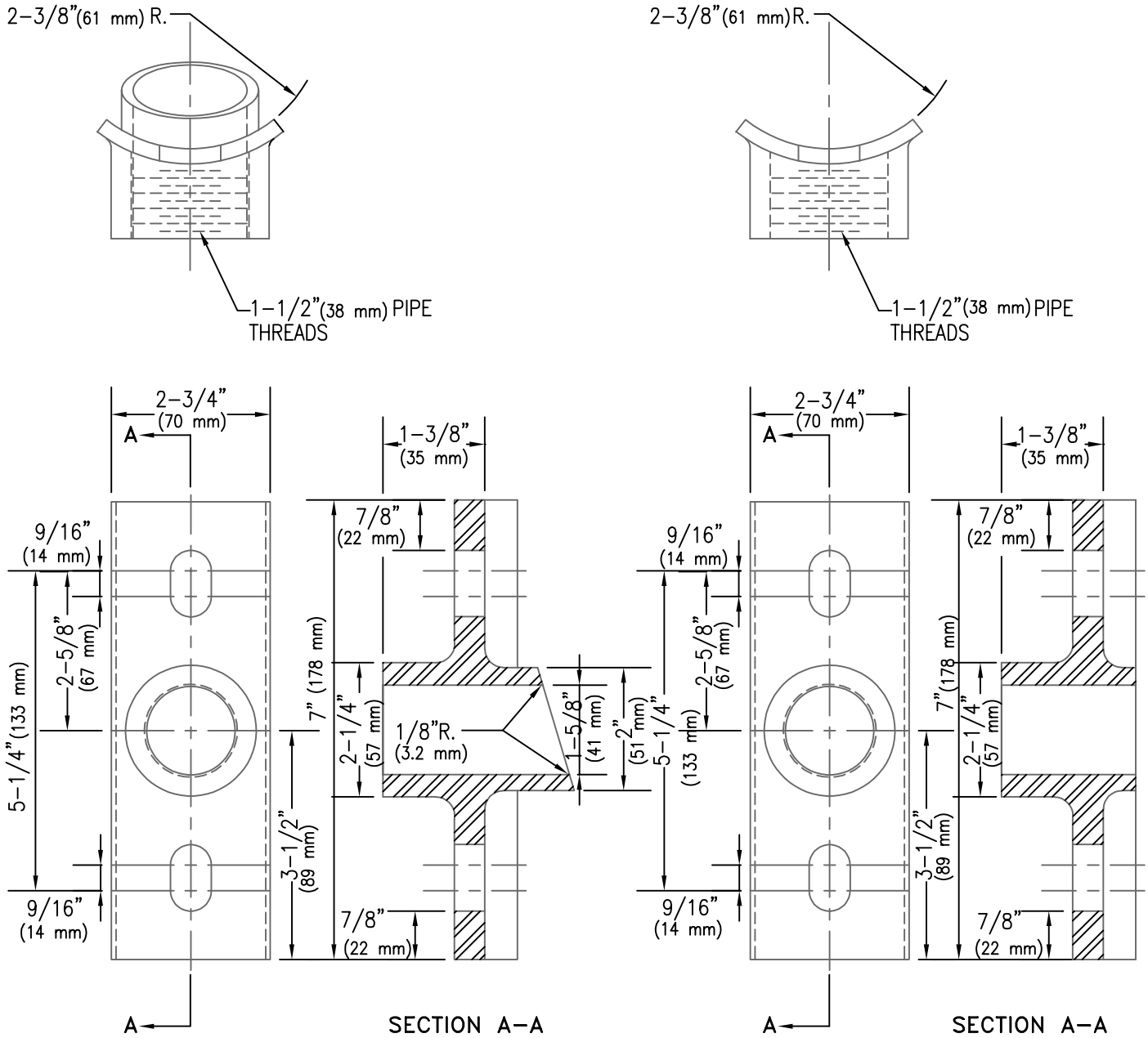

POLE PLATE WITH WIRE GUIDE
(-1)

POLE PLATE
(-2)

NOTES:

1. MATERIAL - HIGH STRENGTH BRONZE.
2. PAINT FINISH TO BE FEDERAL YELLOW UNLESS OTHERWISE SPECIFIED.

ISSUED:		STANDARD DETAIL		DETAIL NO.
8/92		POLE PLATE DETAIL		T 1003
REVISED:				
10/02				SHEET 1 OF 1

TS10-3.DWG 12/07/00 14:42

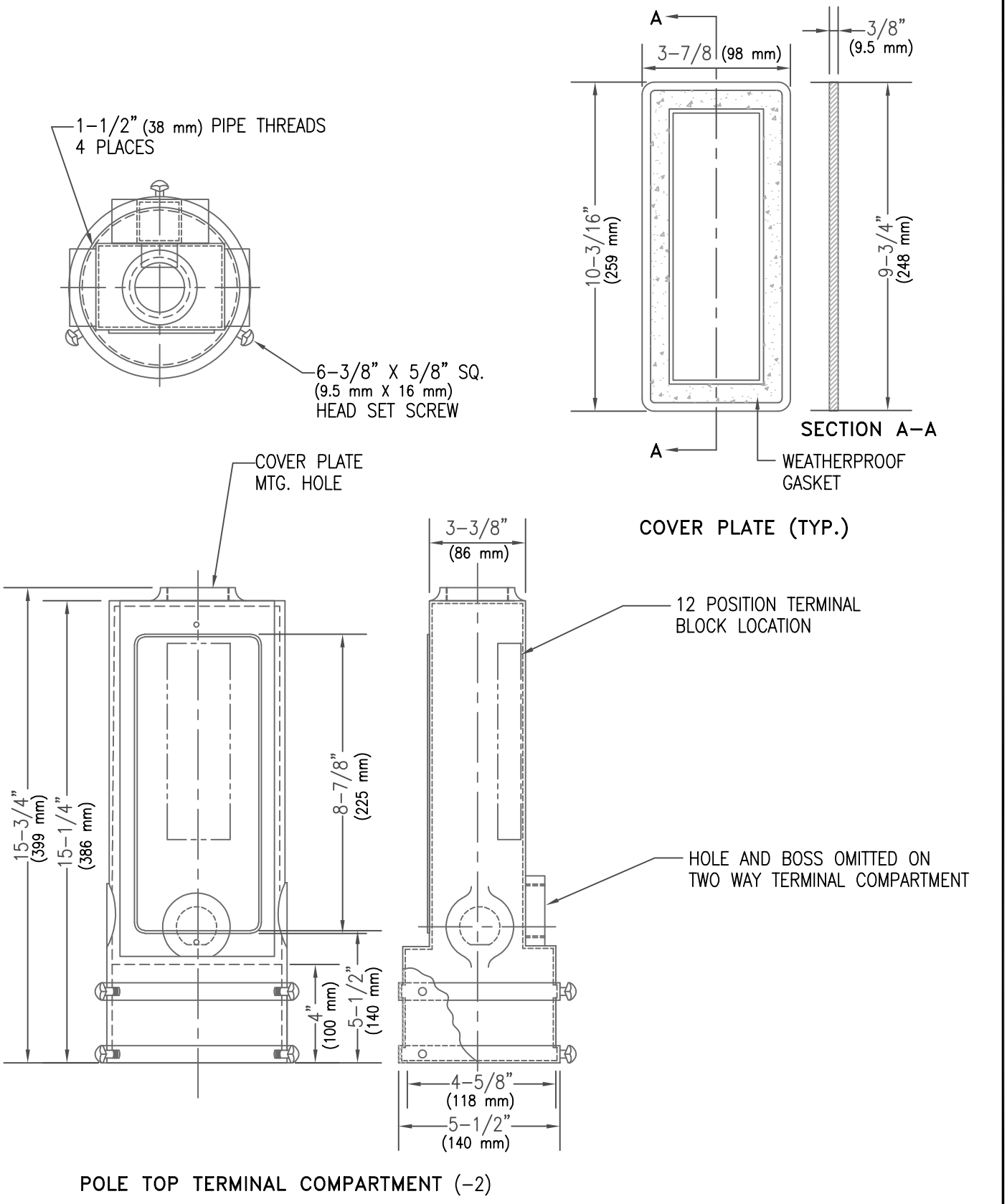

POLE TOP TERMINAL COMPARTMENT (-2)

ISSUED:		STANDARD DETAIL		DETAIL NO.
8/92	CITY OF TUCSON FOUNDED 1775	TERMINAL COMPARTMENT SIDE MOUNT AND POLE TOP MOUNT	THE SEAL of PIMA COUNTY ARIZONA	T 1004
REVISED: 11/04				SHEET 1 OF 2

TS10-4-1.DWG 12/07/00 14:43

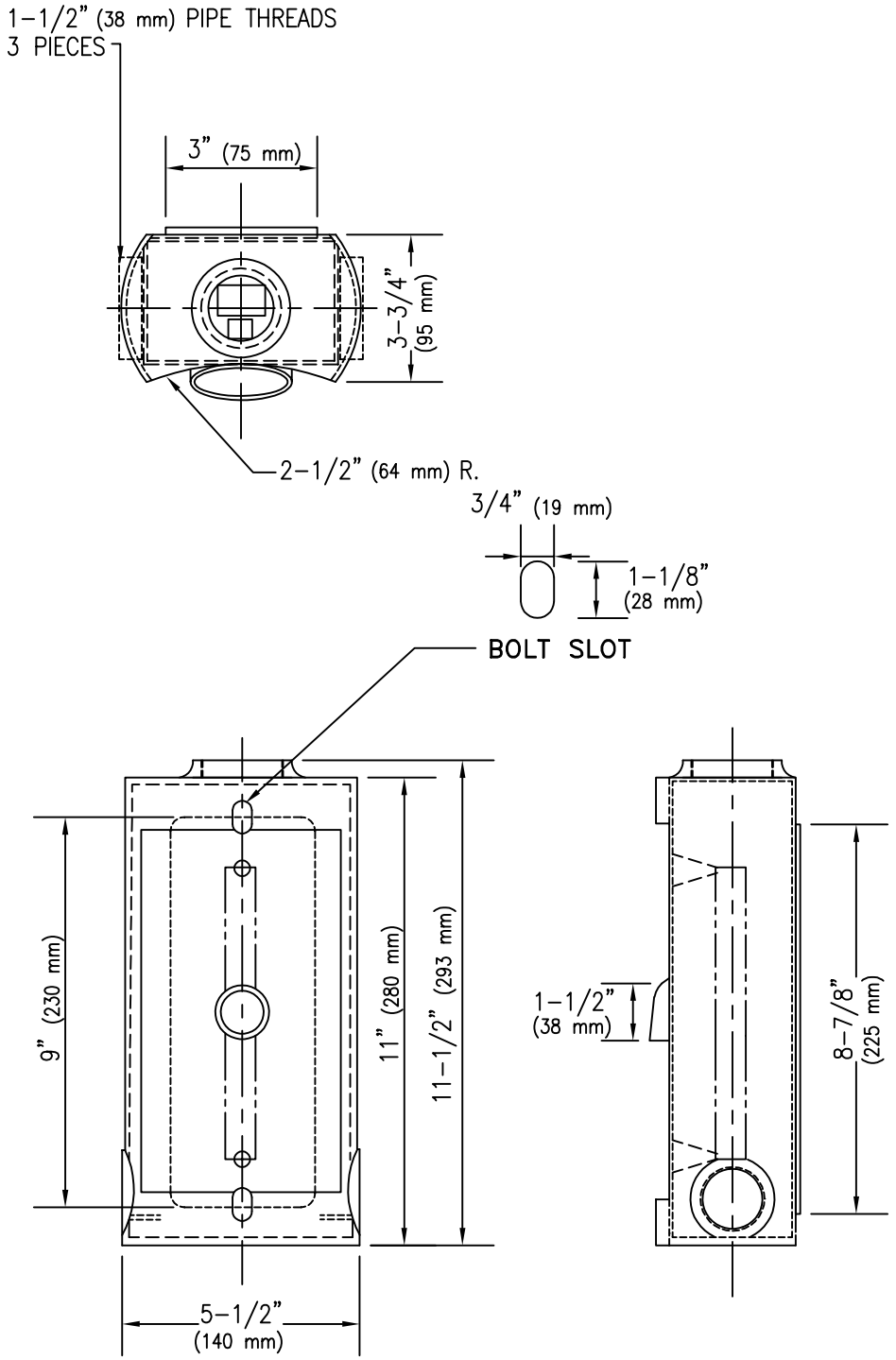

SIDE MOUNTED TERMINAL COMPARTMENT
(-1)

NOTES:

1. COVER PLATE SHALL BE ATTACHED WITH 2 MACHINE SCREWS, 10-32 X 3/4" (19 mm)
2. MATERIAL - SEE GENERAL SPECIFICATIONS AND/OR SPECIAL PROVISIONS.
3. PAIN FINISH TO BE FEDERAL YELLOW UNLESS OTHERWISE SPECIFIED.

ISSUED:		STANDARD DETAIL		DETAIL NO.
8/92	CITY OF TUCSON FOUNDED 1775	TERMINAL COMPARTMENT SIDE MOUNT AND POLE TOP MOUNT	THE SEAL of PIMA COUNTY ARIZONA	T 1004
REVISED:				
10/02				SHEET 2 OF 2

TS10-4-2.DWG 12/07/00 14:43

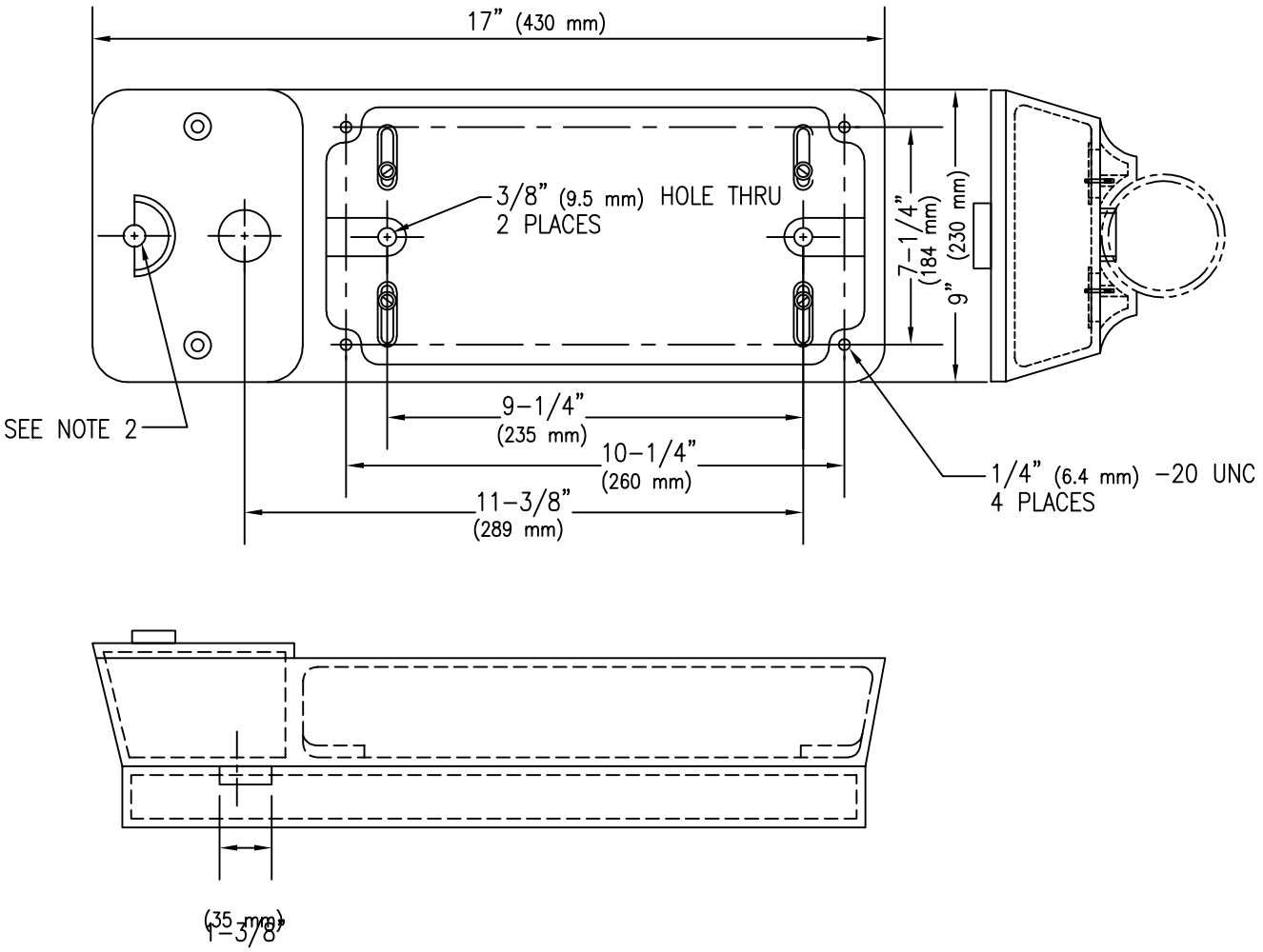

NOTES:

1. MATERIAL SHALL BE ALUMINUM ALLOY.
2. DIAMETER OF CASTING BACK TO ADJUST TO POLE DIAMETER.
3. PUSH BUTTON SHALL CONTAIN A MOMENTARY CONTACT SWITCH WITH NORMAL OPEN CONTACT.
4. POLE INSTALLATION BOLTS, SIGN SCREWS AND WASHERS SHALL BE FURNISHED WITH UNIT.
5. PUSH BUTTON COVER SHALL BE RAIN AND DUST PROOF.
6. PAINT FEDERAL YELLOW UNLESS OTHERWISE SPECIFIED.
7. FOR PEDESTRIAN PLACARD DETAIL, SEE T 1103 OR 1104.

ISSUED:		STANDARD DETAIL		DETAIL NO.
8/92		TYPE I PEDESTRIAN PUSH BUTTON		T 1101
REVISED:				
10/02				SHEET 1 OF 1

TS11-1.DWG 12/07/00 14:45

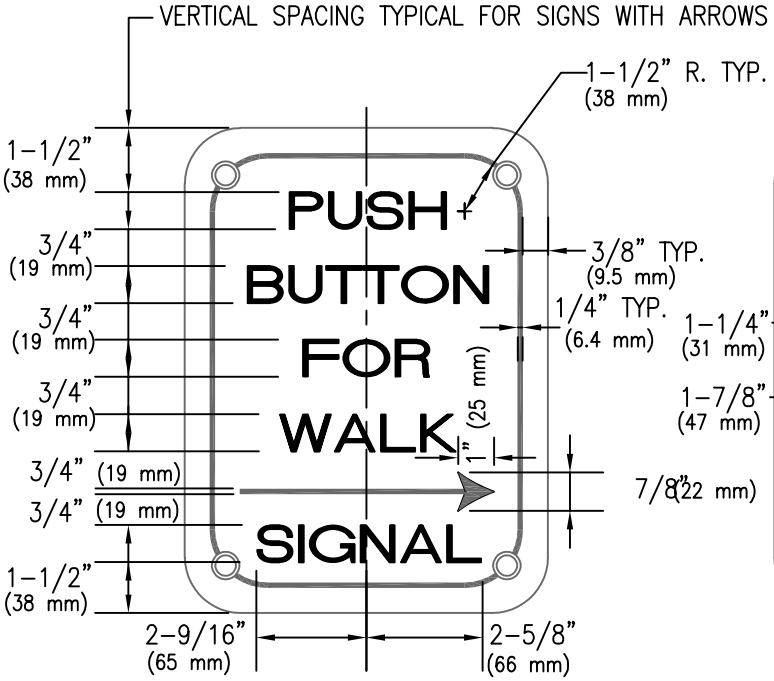

R10-4(R)

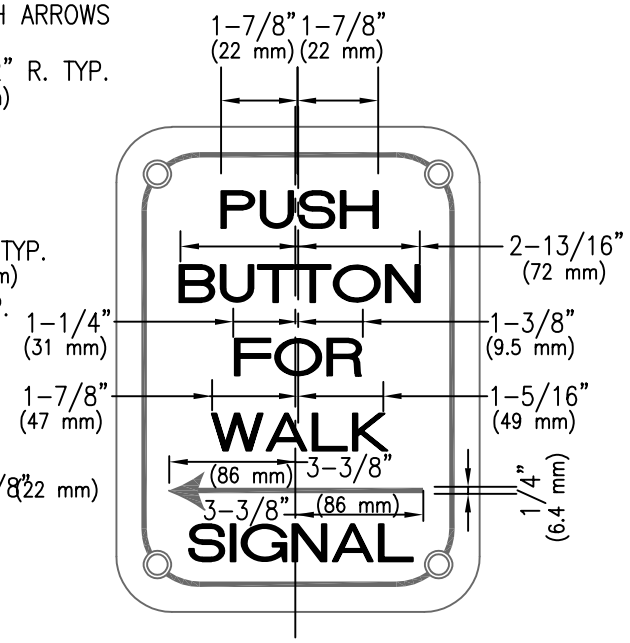

R10-4(L)

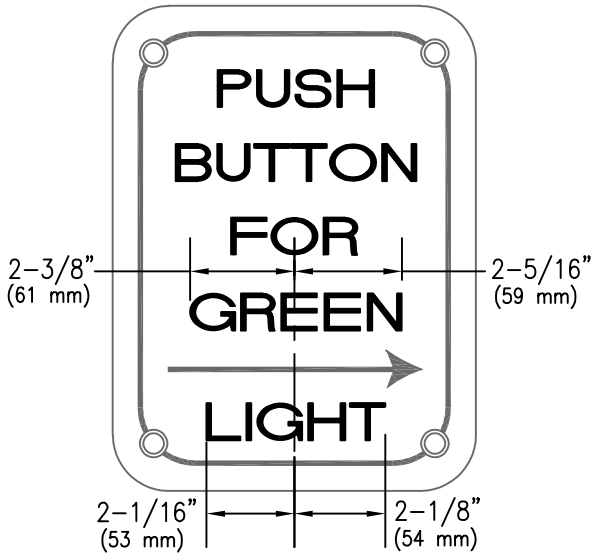

R10-3(R)

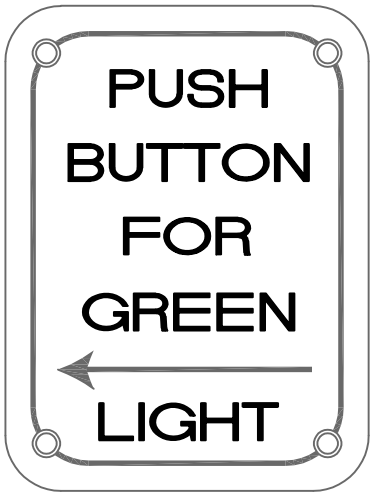

R10-3(L)

NOTES:

1. FOR TYPICAL HORIZONTAL SPACING OF WORDS, SEE SIGN NUMBERS R10-4(R), R10-4(L) AND R10-3(R).
2. FOR TYPICAL ARROW DIMENSIONS, SEE SIGN NUMBER R10-4(L).
3. MATERIAL TO BE 20 GAUGE STEEL WITH PORCELAIN ENAMEL.
4. ALL LETTERS SHALL BE 1" (25 mm) SERIES "D".

ISSUED:		STANDARD DETAIL		DETAIL NO.
8/92	CITY OF TUCSON FOUNDED 1775	PLACARDS FOR PEDESTRIAN PUSH BUTTONS	THE SEAL of PIMA COUNTY ARIZONA	T 1103
REVISED: 10/02				SHEET 1 OF 2

TS11-3-1.DWG 12/07/00 14:46

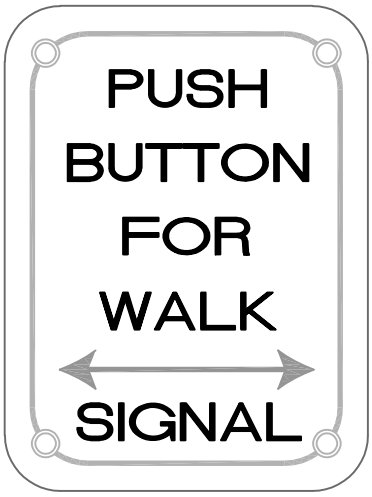

R10–4(B)

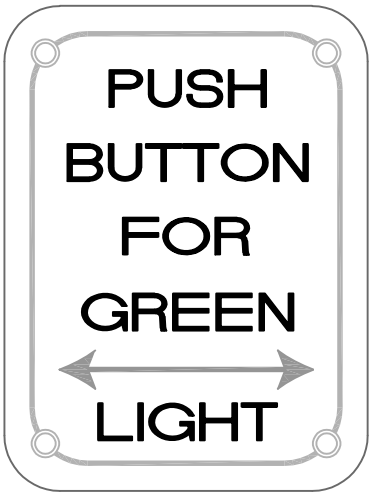

R10–3(B)

BIKE

YIELD

ISSUED:		STANDARD DETAIL		DETAIL NO.
8/92		PLACARDS FOR PEDESTRIAN PUSH BUTTONS		T 1103
REVISED:				
10/02				SHEET 2 OF 2

TS11–3–2.DWG 12/07/00 14:47

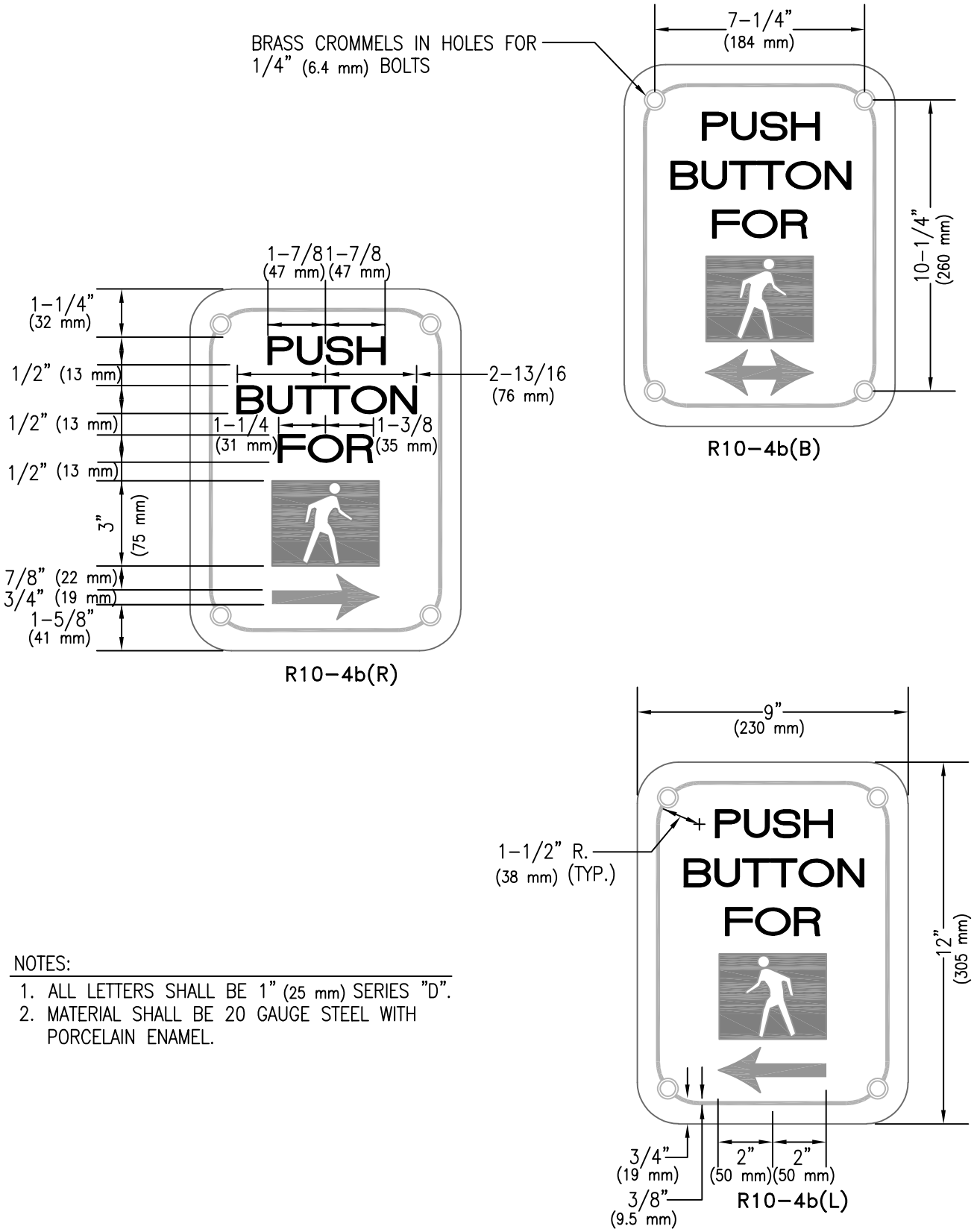

NOTES:

1. ALL LETTERS SHALL BE 1" (25 mm) SERIES "D".
2. MATERIAL SHALL BE 20 GAUGE STEEL WITH PORCELAIN ENAMEL.

ISSUED:		STANDARD DETAIL		DETAIL NO.
8/92	CITY OF TUCSON FOUNDED 1775	PLACARDS FOR PEDESTRIAN PUSH BUTTONS (INTERNATIONAL)	THE SEAL of PIMA COUNTY ARIZONA	T 1104
REVISED: 10/02				SHEET 1 OF 2

TS11-4.DWG 12/07/00 14:58

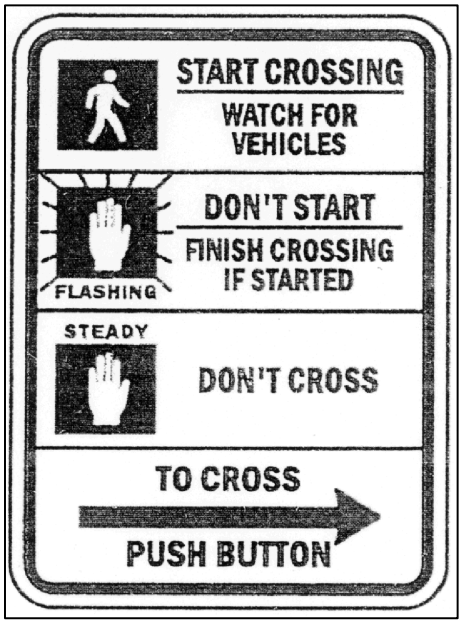

R10–6(R) (SHOWN)
R10–6(L): ARROW HEAD TO LEFT
R10–6(B): ARROW HEAD IN BOTH DIRECTIONS

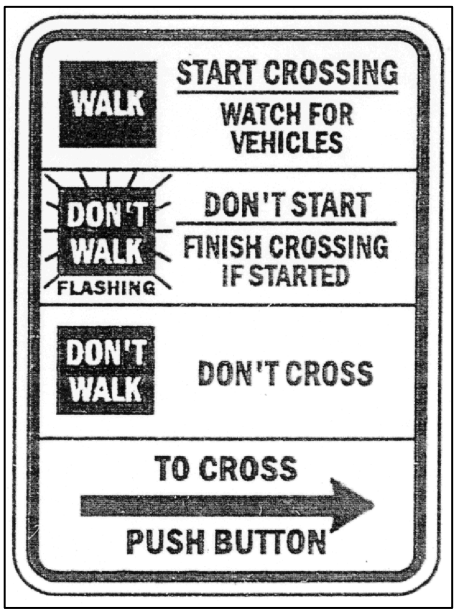

R10–7(R) (SHOWN)
R10–7(L): ARROW HEAD TO LEFT
R10–7(B): ARROW HEAD IN BOTH DIRECTIONS

ISSUED:		STANDARD DETAIL		DETAIL NO.
8/92	CITY OF TUCSON	PLACARDS FOR PEDESTRIAN PUSH BUTTONS (INTERNATIONAL)	THE SEAL of PIMA COUNTY ARIZONA	T 1104
REVISED: 10/02				SHEET 2 OF 2

TS11-4.DWG 12/07/00 14:58

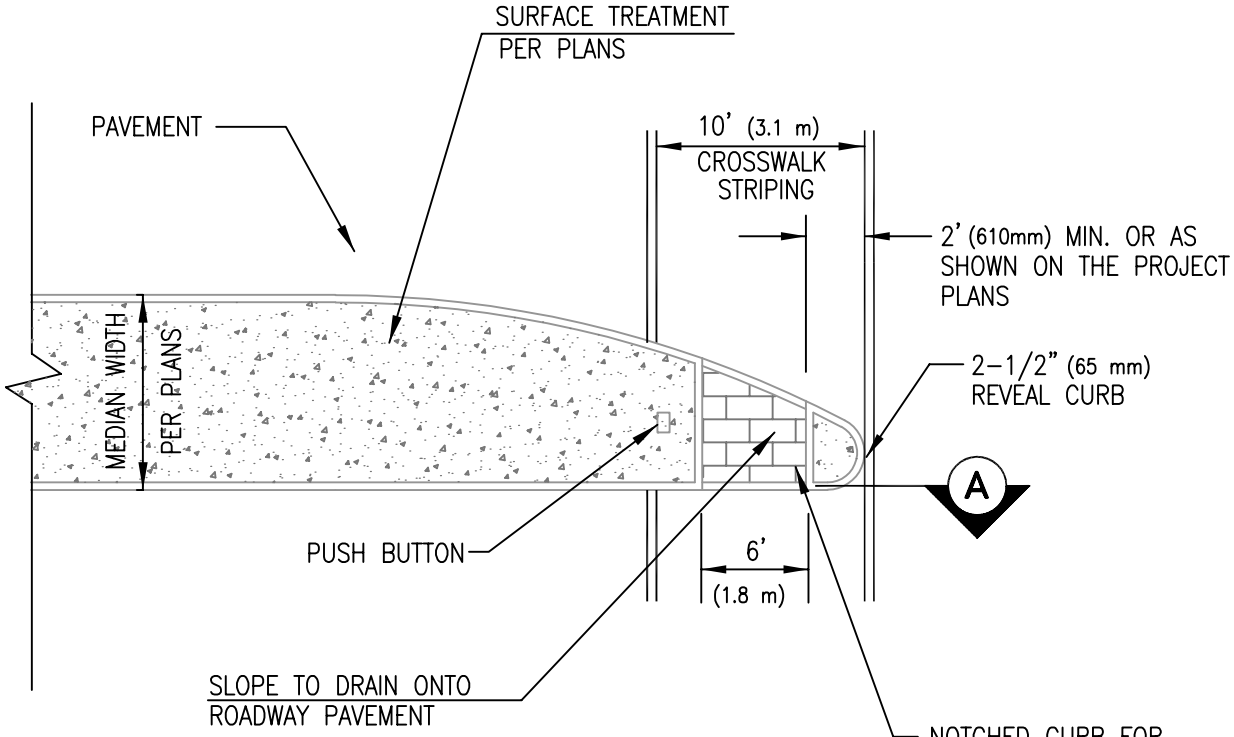

PLAN

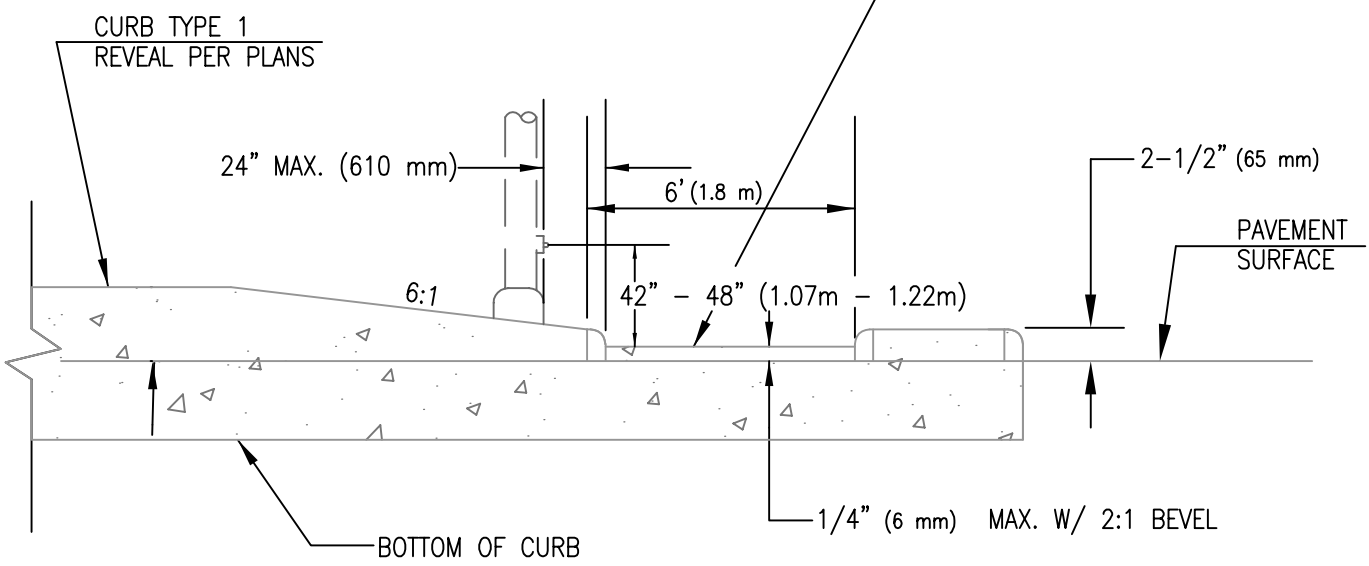

A SECTION

CROSSWALK THROUGH MEDIAN

ISSUED:		STANDARD DETAIL		DETAIL NO.
10/88	CITY OF TUCSON FOUNDED 1776	PEDESTRIAN PUSH BUTTON MEDIAN CROSSWALK LOCATION	THE SEAL of PIMA COUNTY ARIZONA	T1105
REVISED: 11/04				SHEET 1 OF 1

21404B.DWG 08/03/00 09:10

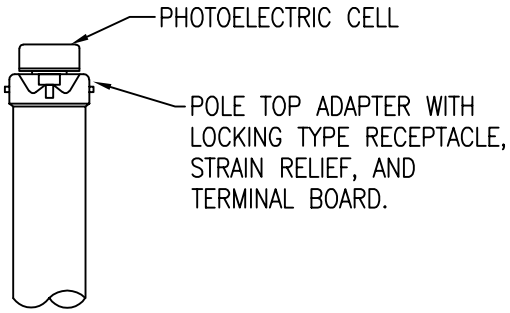

STEEL POLE–TOP

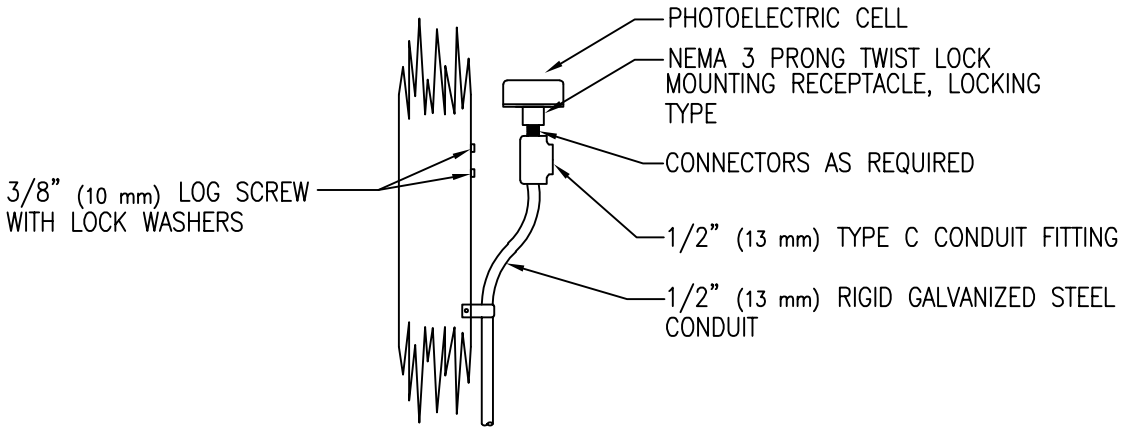

WOOD POLE MOUNT

NOTES:

1. ORIENTATE PHOTO ELECTRIC CELL TO FACE NORTH.
2. ALL CONDUIT CONNECTIONS SHALL BE WATER TIGHT.
3. THE PHOTELECTRIC CELL MAY ALSO BE INSTALLED IN THE LUMINAIRE CLOSEST TO THE CONTROL CABINET. IT IS PREFERABLE THAT THE LUMINAIRE BE POSITIONED OVER A MULTI–USE LANE OR A RIGHT TURN LANE.

ISSUED:		STANDARD DETAIL		DETAIL NO.
8/92		PHOTOELECTRIC CELL MOUNTING		T 1505
REVISED:				
10/02				SHEET 1 OF 1

TS15–5.DWG 12/07/00 15:05

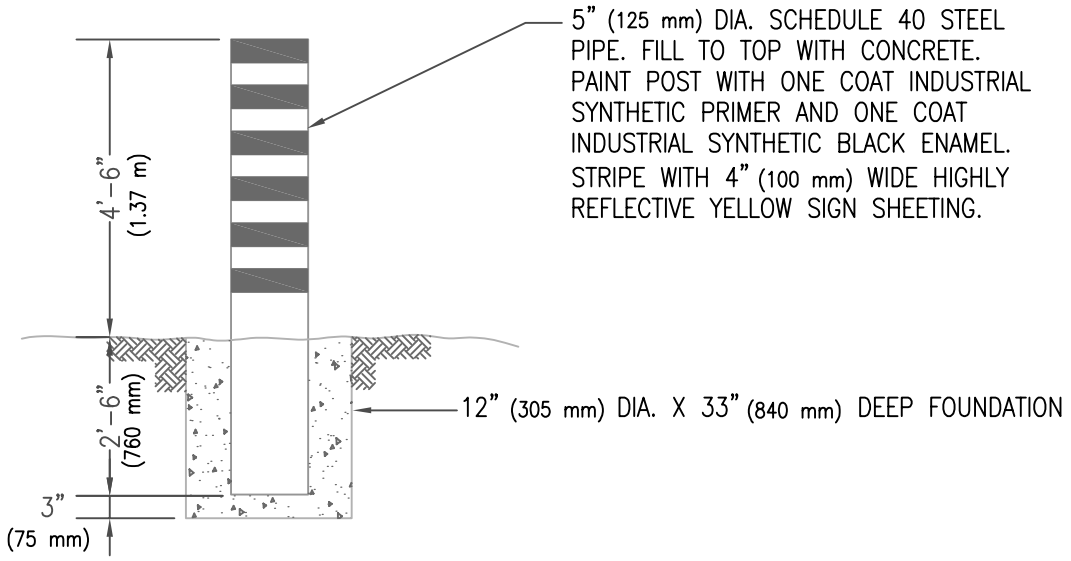

NOTE:

1. LOCATE PER INSPECTOR'S DIRECTION.

ISSUED:		STANDARD DETAIL		DETAIL NO.
8/92		GUARD POST		T 1603
REVISED:				
10/02				SHEET 1 OF 1

TS16-3.DWG 08/03/00 15:22

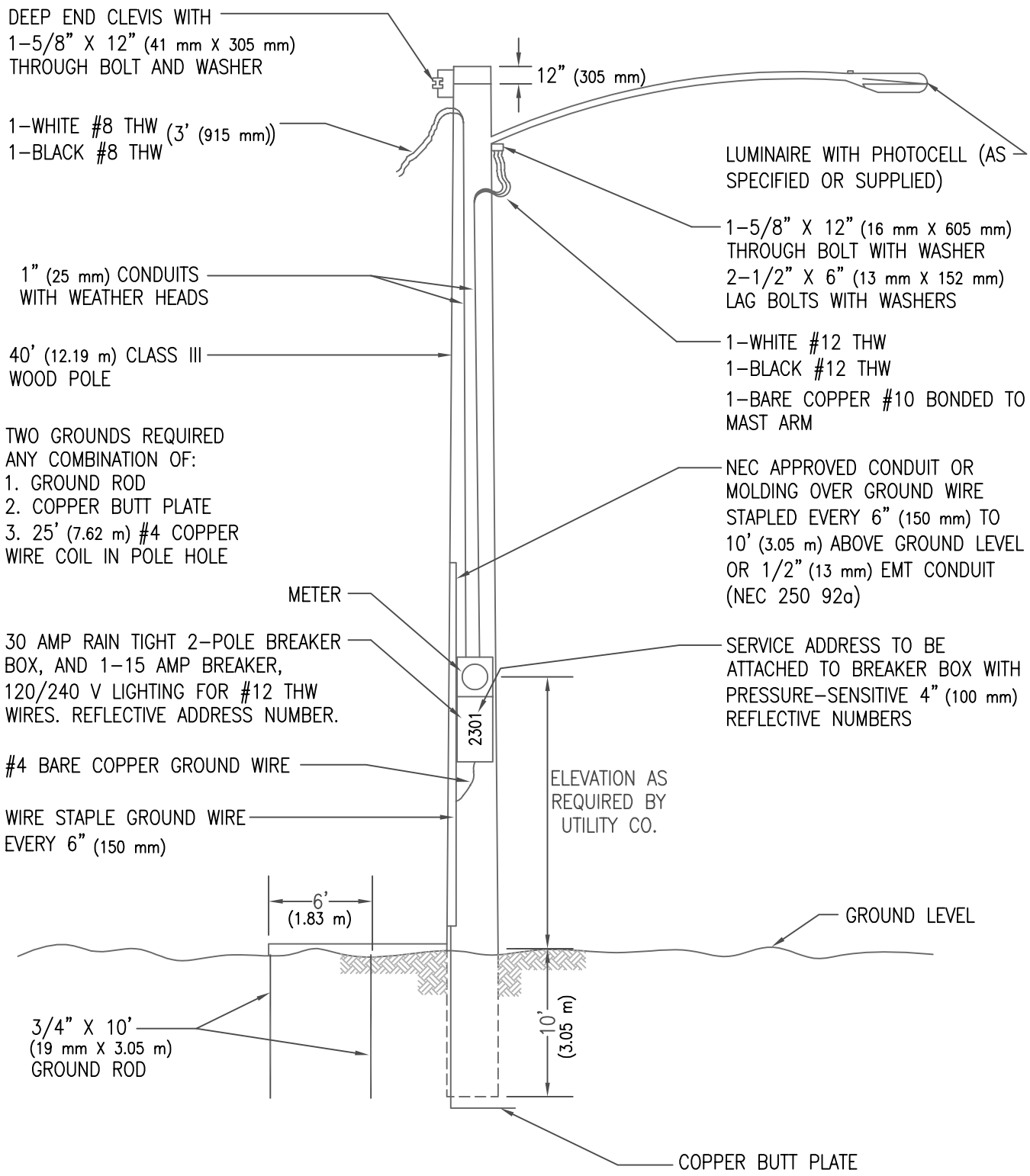

ISSUED:		STANDARD DETAIL		DETAIL NO.
8/92		SERVICE STREET LIGHT ASSEMBLY (METERED)		T 1701
REVISED:				
10/02				SHEET 1 OF 1

TS17–1.DWG 12/07/00 15:05

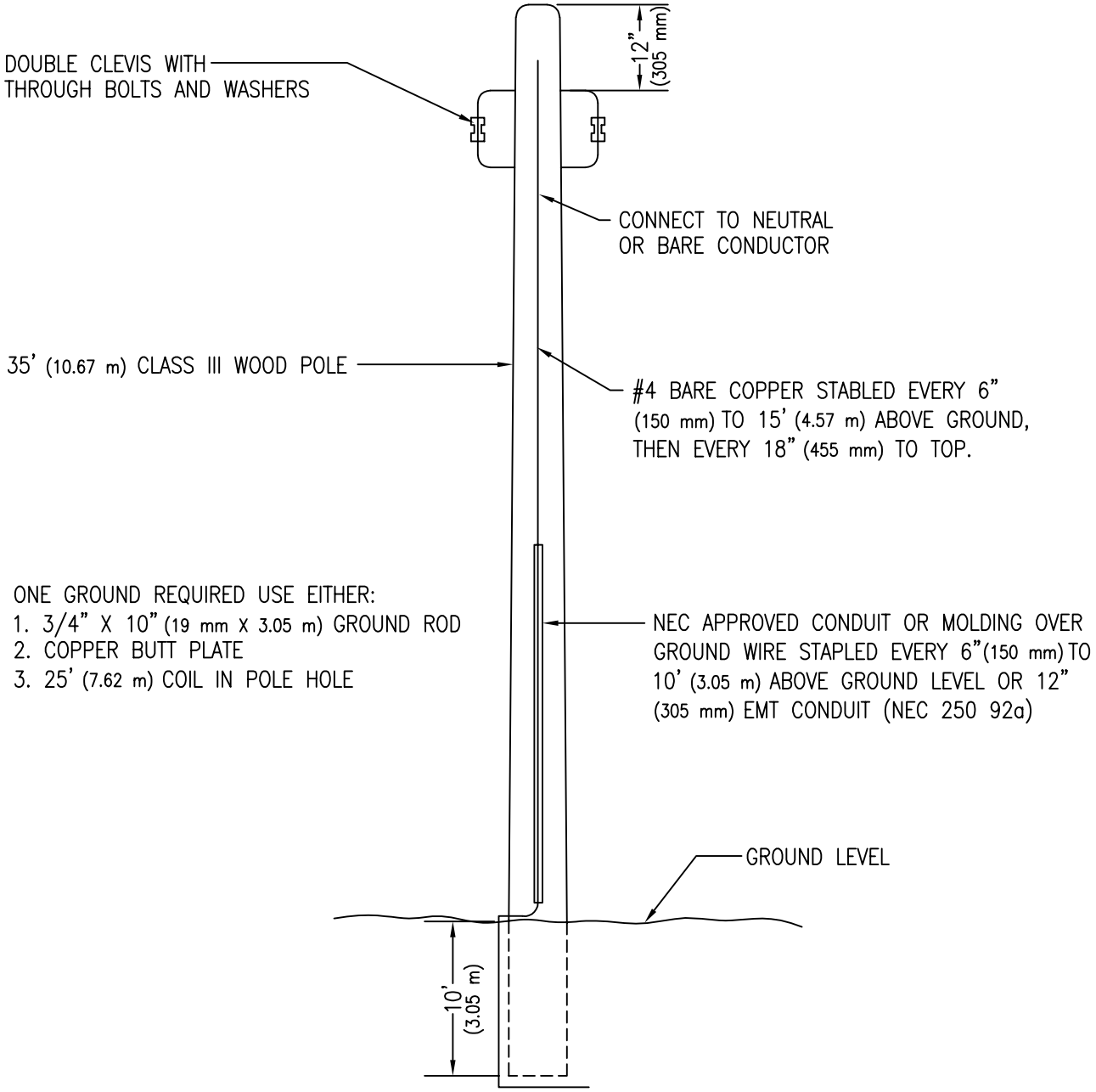

ISSUED:		STANDARD DETAIL		DETAIL NO.
8/92		MID-SPAN JUMPER POLE		T 1702
REVISED:				SHEET 1 OF 1
10/02				

TS17-2.DWG 12/07/00 15:06

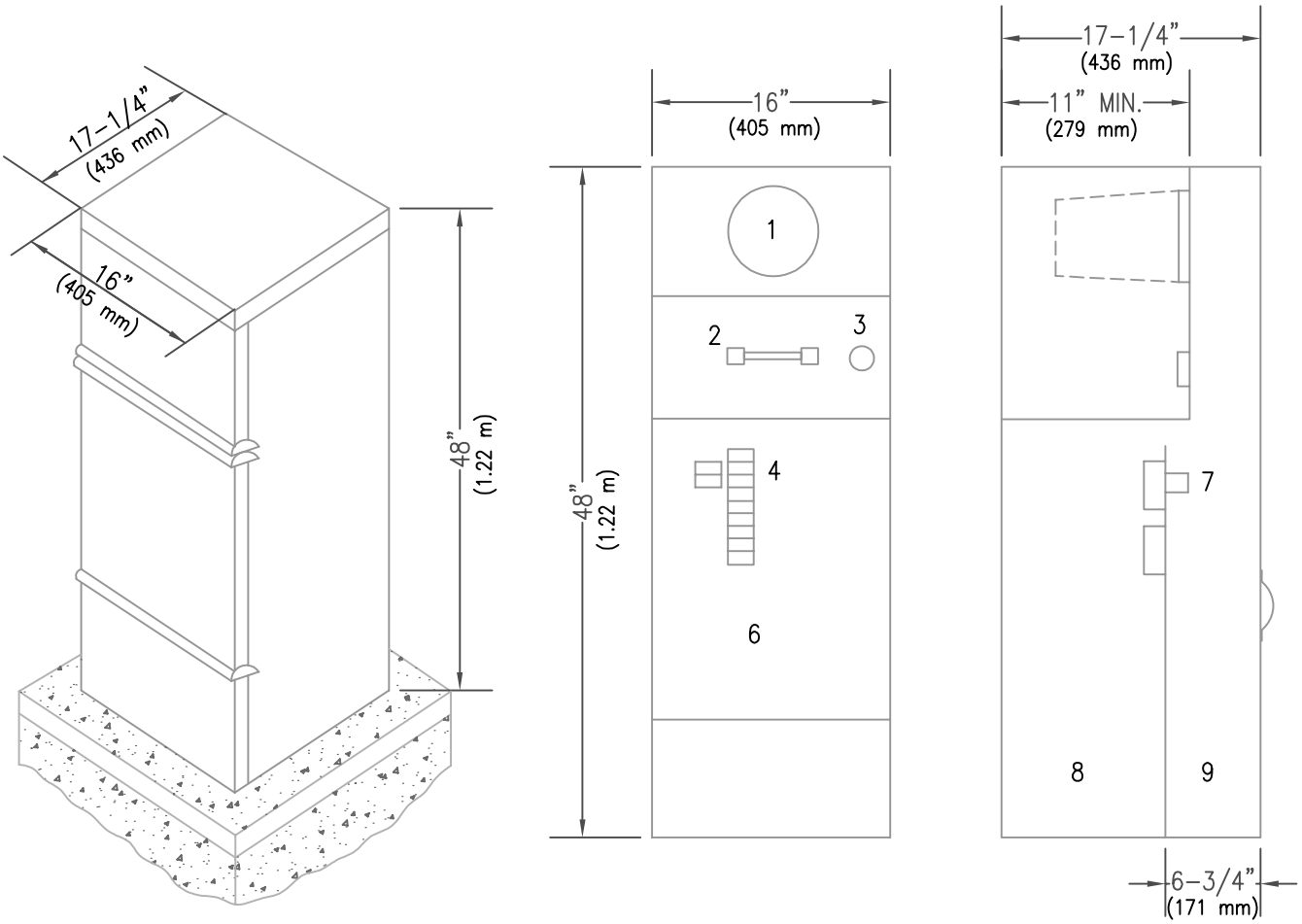

STANDARD FEATURES

1. METER SOCKET 125 AMP RATED
2. UTILITY TEST SECTION
3. PHOTOCELL SOCKET
4. 12 CIRCUIT INTERIOR (METERED)
5. HINGED DEADFRONT
6. UTILITY LANDING LUGS
7. LOAD CONDUIT AREA
8. LINE CONDUIT AREA
9. LINE ACCESS COVER

STANDARD VOLTAGE 120/240 V 10 3W

NOTE: SERVICE PEDESTAL SHALL BE SUPPLIED WITH: 125 AMP DP MAIN BREAKER; ONE 60 AMP, 2 POLE BREAKER (TRAFFIC SIGNAL); TWO 30 AMP, 1 POLE BREAKERS (STREET LIGHTING). PEDESTAL TO BE 14 GA. STEEL PAINTED WHITE OR AS SPECIFIED.

ISSUED:		STANDARD DETAIL		DETAIL NO.
8/92	CITY OF TUCSON FOUNDED 1775	SERVICE PEDESTAL (METERED)	THE SEAL of PIMA COUNTY ARIZONA	T 1801
REVISED: 10/02				SHEET 1 OF 2

TS18-1-1.DWG 12/07/00 15:06

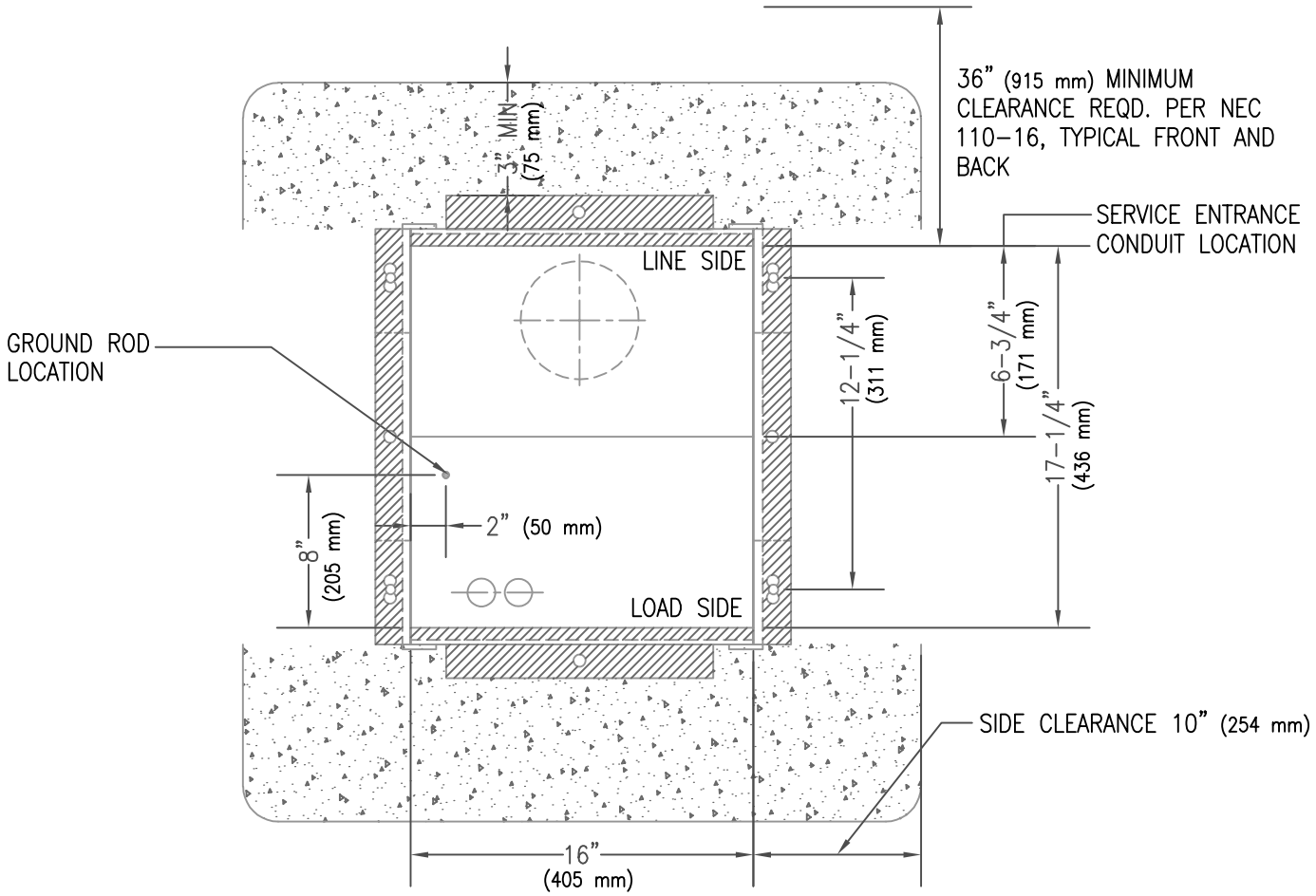

TOP VIEW

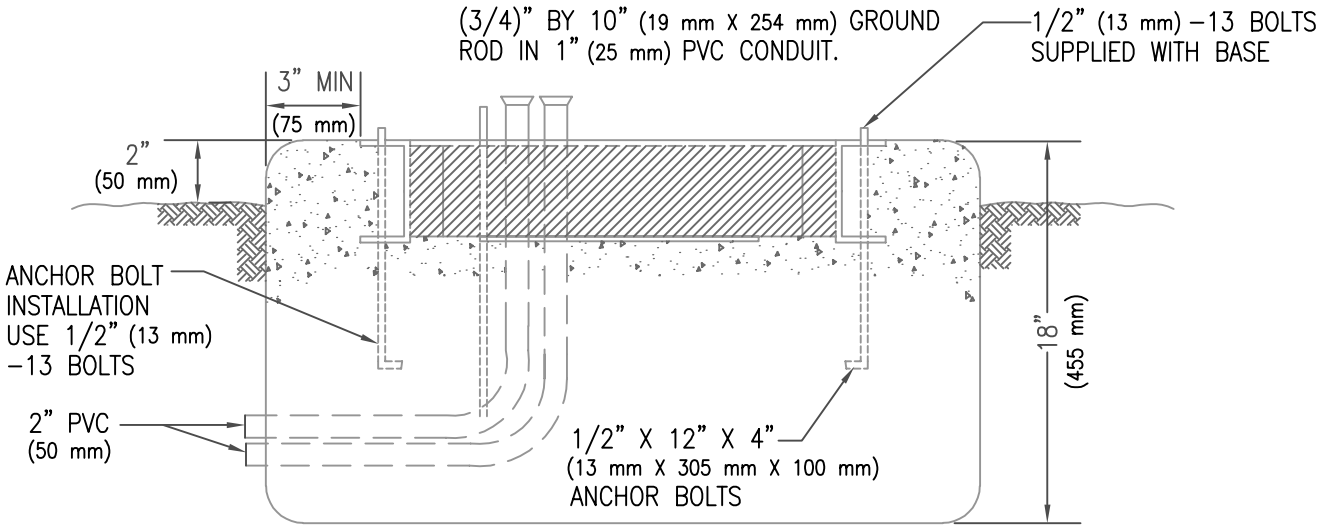

SIDE VIEW

ISSUED:		STANDARD DETAIL		DETAIL NO.
8/92	CITY OF TUCSON FOUNDED 1775	SERVICE PEDESTAL (METERED)	THE SEAL of PIMA COUNTY ARIZONA	T 1801
REVISED: 10/02				SHEET 2 OF 2

TS18-1-2.DWG 12/07/00 15:07

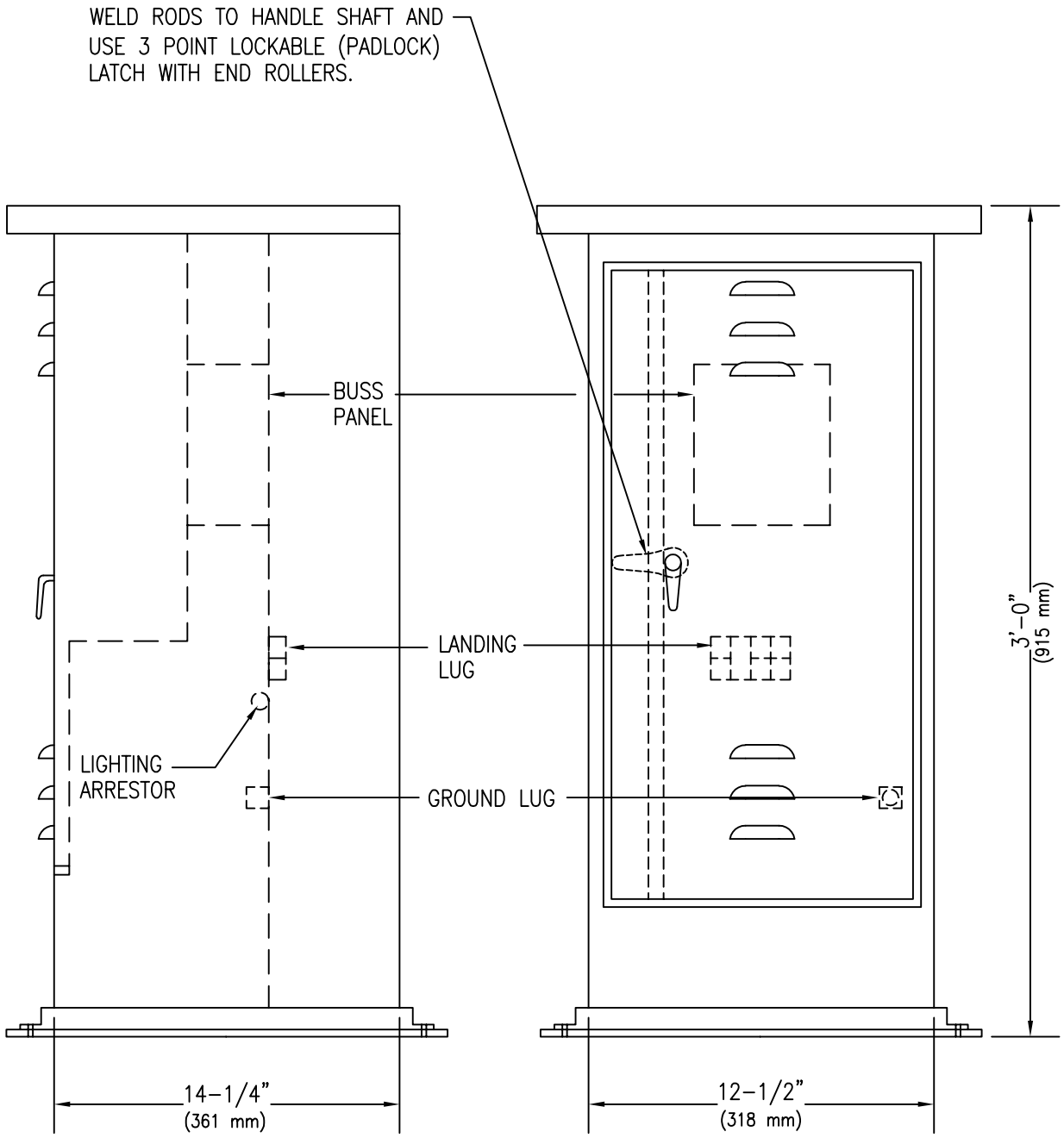

ISSUED:		STANDARD DETAIL		DETAIL NO.
8/92		SERVICE PEDESTAL (UNMETERED)		T 1803
REVISED:				
10/02				SHEET 1 OF 3

TS18-3-1.DWG 12/07/00 15:07

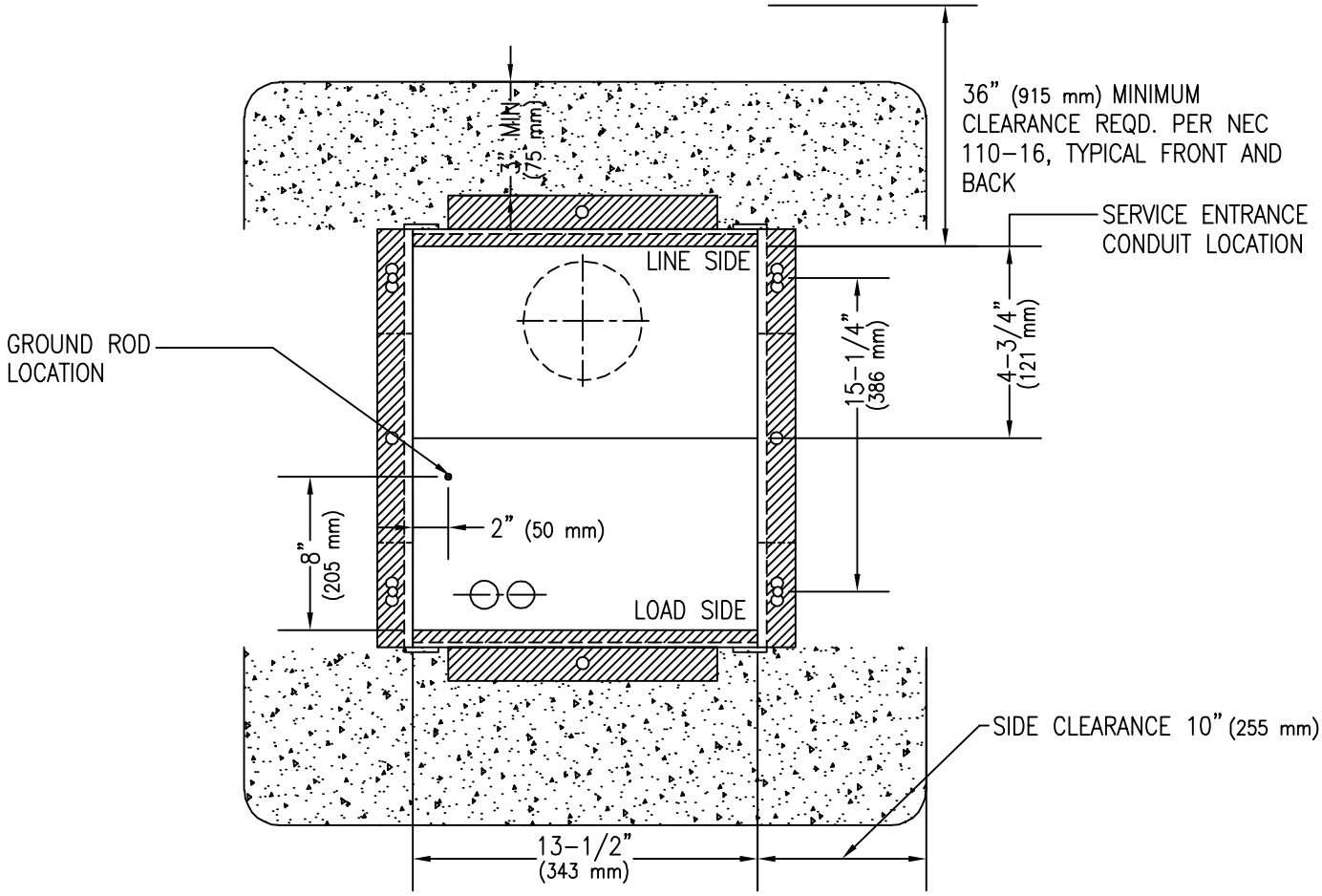

TOP VIEW

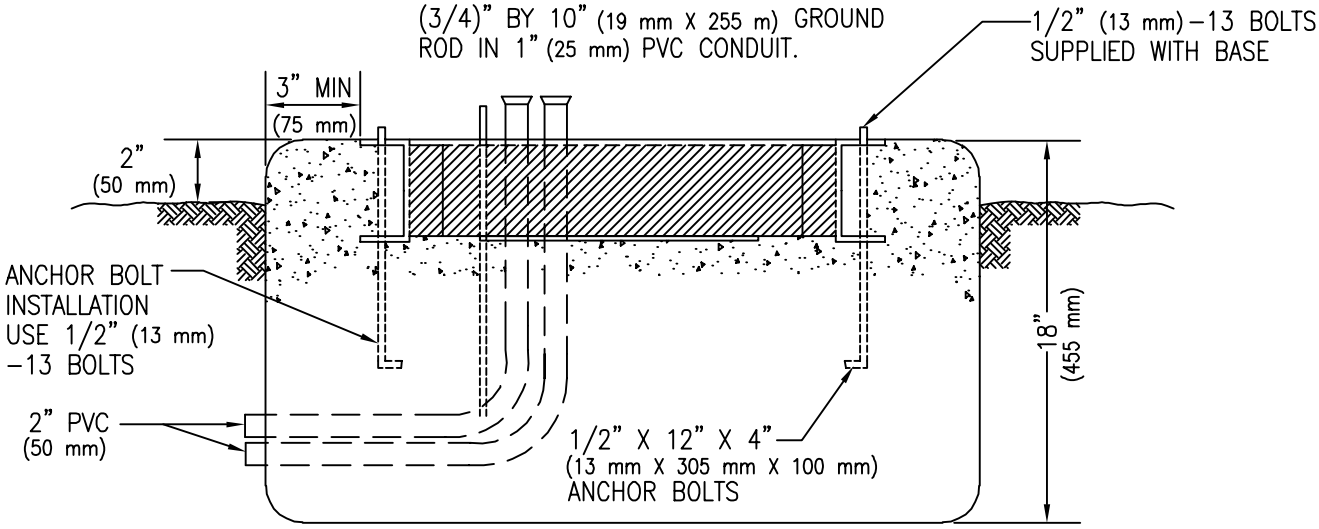

SIDE VIEW

ISSUED:		STANDARD DETAIL		DETAIL NO.
8/92	CITY OF TUCSON FOUNDED 1775	SERVICE PEDESTAL (UNMETERED)	THE SEAL of PIMA COUNTY ARIZONA	T 1803
REVISED: 10/02				SHEET 2 OF 3

TS18-3-2.DWG 12/07/00 15:08

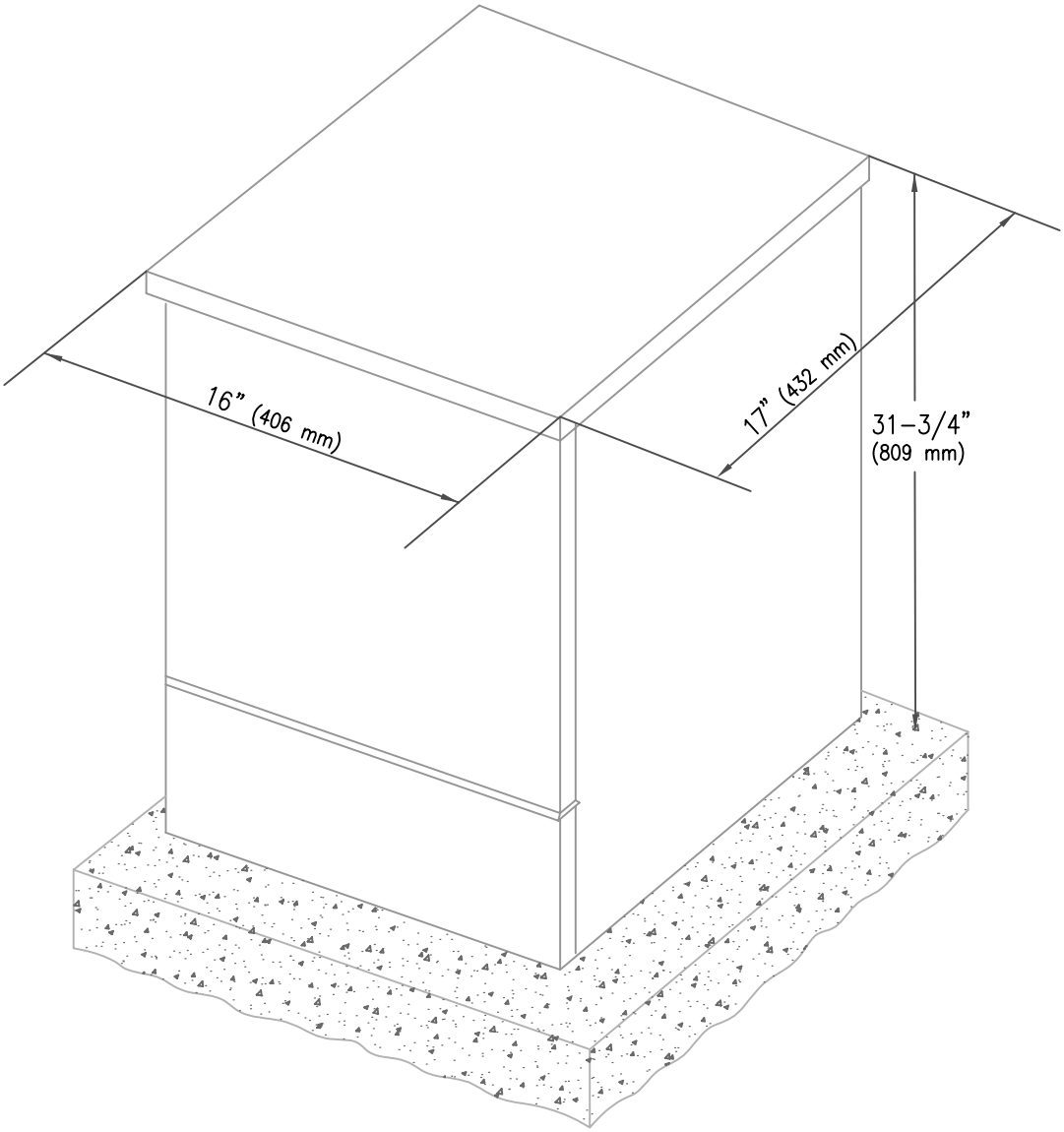

ISSUED:		STANDARD DETAIL		DETAIL NO.
8/92		SERVICE PEDESTAL (UNMETERED)		T 1803
REVISED:				
10/02				SHEET 3 OF 3

TS18-3-3.DWG 12/07/00 15:08

IF SENSOR IS FOR EASTBOUND OR WESTBOUND

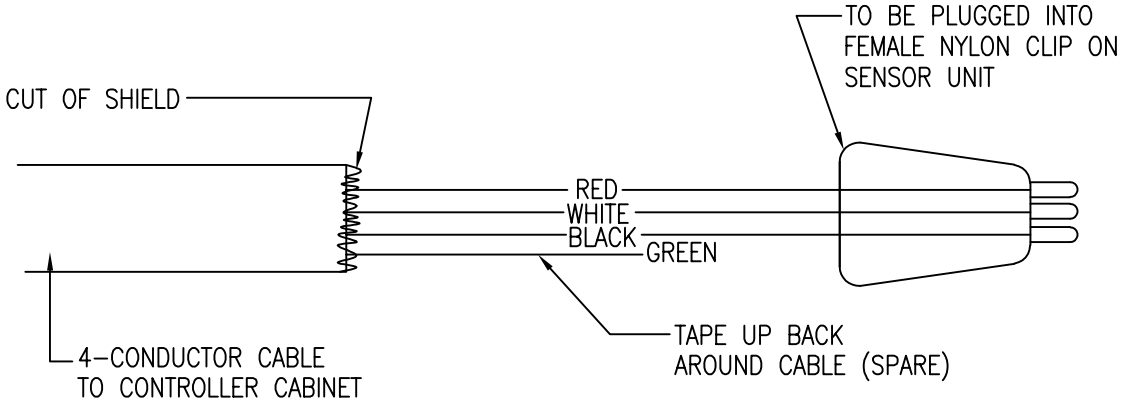

IF SENSOR IS FOR EASTBOUND OR WESTBOUND

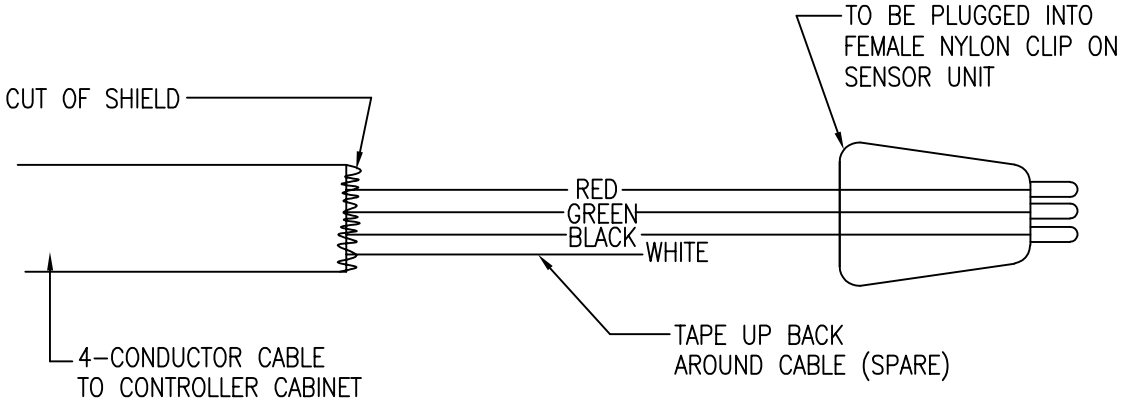

NOTES:

1. CUT OFF SHIELD (NOT USED).
2. RED ALWAYS GOES TO ORANGE WIRE FROM SENSOR'S FEMALE CLIP.
3. BLACK ALWAYS GOES TO BLACK.
4. SENSOR UNIT AND FEMALE CLIP TO BE CITY-SUPPLIED FOR CONTRACTOR TO INSTALL. CONTACT 791-3193.

ISSUED:		STANDARD DETAIL		DETAIL NO.
8/92		PRE-EMPT SENSOR WIRING		T 1901
REVISED:				
10/02				SHEET 1 OF 1

TS19-1.DWG 12/07/00 15:09

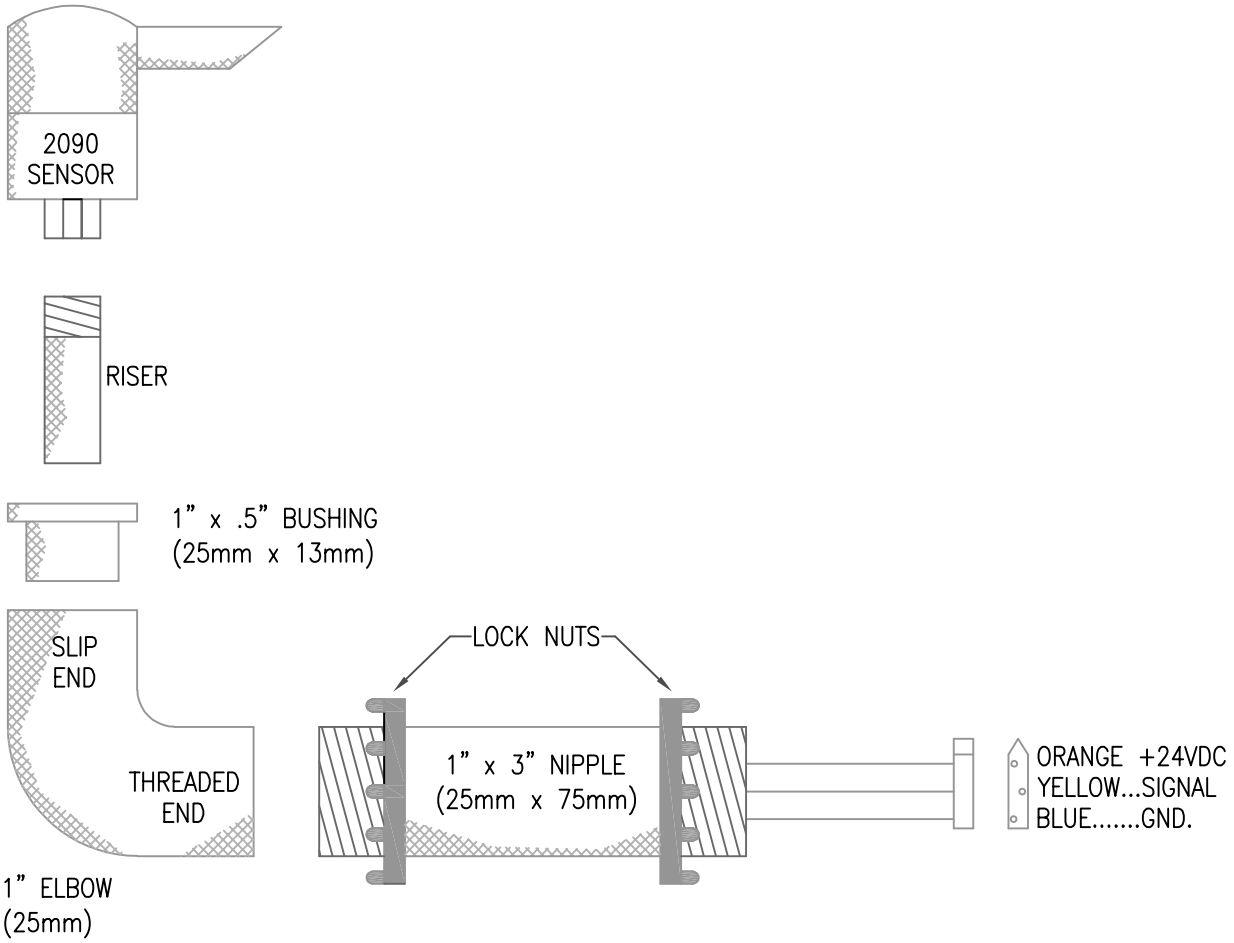

SENSOR ASSEMPLY NOTES:

1. APPLY PRIMER TO RISER CUT END, INSIDE AND OUTSIDE OF BUSHING AND INSIDE SLIP END OF EL.
2. APPLY CEMENT GENEROUSLY TO INSIDE OF BUSHING AND INSIDE SLIP END OF EL.
3. PROMPTLY INSERT BUSHING WITH A QUARTER TURN MOTION INTO EL UNTIL BUSHING BOTTOMS OUT AND HOLD FOR 30 SECONDS.
4. APPLY CEMENT GENEROUSLY TO INSIDE OF BUSHING AND TO CUT END OF RISER.
5. PROMPTLY INSERT RISER WITH A QUARTER TURN MOTION INTO BUSHING UNTIL IT BOTTOMS OUT AND HOLD FOR 30 SECONDS.
6. LET CEMENT CURE FOR 30 MINUTES BEFORE FUTURE ASSEMBLY.
7. TAKE PRE-WIRED SENSOR AND FEED WIRES THROUGH THREADED END OF RISER.
8. THREAD SENSOR ONTO RISER 2 TO 3 TURNS ONLY.
9. THREAD LOCK NUTS ONTO EACH END OF 1" BY 3" (25mm BY 75mm) NIPPLE. SMOOTH SIDE OF LOCK NUTS SHOULD FACE TOWARD CENTER OF NIPPLE.
10. THREAD NIPPLE INTO PVC EL HAND TIGHT.
11. INSERT MOLEX PIN INTO CONNECTOR AS FOLLOWS: ORANGE WIRE INTO POINTED END OF PIN, YELLOW WIRE INTO CENTER HOLE OF PIN CONNECTOR, BLUE WIRE INTO SQUARED END OF CONNECTOR. ASSEMBLY IS NOW READY TO BE JOINED WITH TWO GANG BOX.

ISSUED:		STANDARD DETAIL		DETAIL NO.
8/92		PRE-EMPT SENSOR ASSEMBLY		T 1902
REVISED:				
10/02				SHEET 1 OF 2

TS19-2-1.DWG 12/07/00 15:10

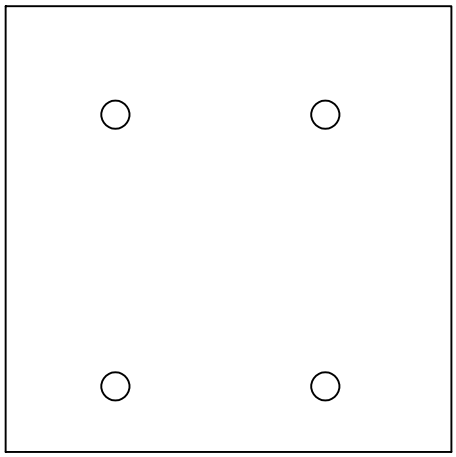

COVER

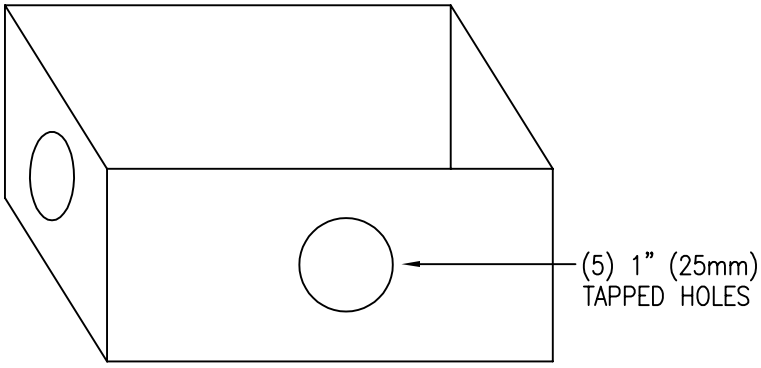

2 GANG OUTLET BOX

2 GANG BOX ASSEMBLY NOTES:

1. FIND SMALL CIRCULAR INDENTATION INSIDE OF TWO GANG OUTLET BOX AND KNOCK OUT A WEEP HOLE USING HAMMER AND PUNCH.
2. APPLY SILICONE TO UNDERSIDE OF OUTLET BOX COVER. DO NOT SILICONE OVER BOLT HOLES.
3. CAREFULLY PUT GASKET ON COVER WITH BOLT HOLES IN CORRECT ALIGNMENT.
4. TAKE 1" x 2" (25mm x 50mm) NIPPLE AND THREAD INTO UNDERSIDE OF OUTLET BOX.
5. PUT WASHER ON NIPPLE AND THREAD LOCK NUT ON.
6. OUTLET BOX CAN BE CONFIGURED WITH ONE OR TWO SENSORS, WITH OR WITHOUT STROBE. HOLE PLUGS COME WITH BOX AND SHOULD BE INSTALLED WITH SILICONE IN ANY UNUSED HOLES TO KEEP WATER OUT. WHEN SENSORS AND A STROBE ARE USED, SENSORS ARE TO BE THREADED ACROSS FROM EACH OTHER AND STROBE OPPOSITE OF BACK PLATE ON SIGNAL HEAD.

ISSUED:		STANDARD DETAIL		DETAIL NO.
8/92		PRE-EMPT SENSOR ASSEMBLY		T 1902
REVISED:				
10/02				SHEET 2 OF 2

TS19-2-2.DWG 12/07/00 15:10

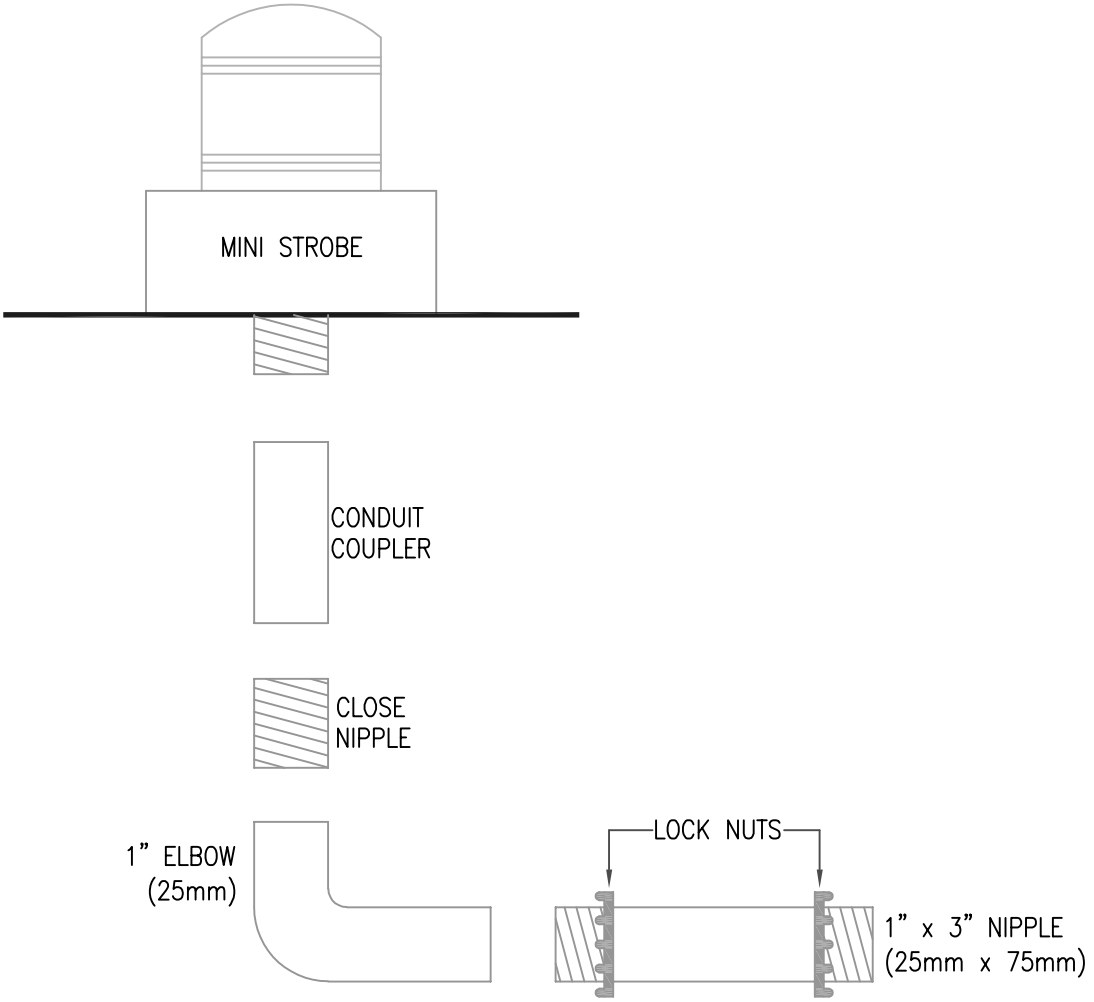

STROBE ASSEMBLY NOTES:

1. STROBE WIRES SHOULD BE PULLED THROUGH EACH PIECE AS IT IS ASSEMBLED.
2. THREAD CONDUIT COUPLER INTO STROBE. SOME STROBES ALREADY COME WITH CONDUIT COUPLER INSTALLED.
3. THREAD CLOSE NIPPLE INTO CONDUIT COUPLER HAND TIGHT.
4. THREAD PVC 1" (25mm) ELBOW ONTO CLOSE NIPPLE UNTIL NO THREADS ARE SHOWING.
5. THREAD CONDUIT LOCK NUTS ONTO 1" BY 3" (25mm BY 75mm) NIPPLE WITH THE SMOOTH SIDE OF LOCK NUTS TOWARDS THE CENTER OF NIPPLE.
6. THREAD NIPPLE INTO 1" (25mm) ELBOW AND TIGHTEN USING PLIERS OR WRENCH. TIGHTEN LOCK NUT AGAINST TO 1" (25mm) ELBOW.
7. STROBE WIRE SHOULD BE AT LEAST 4" LONGER THAN THE ASSEMBLY.
8. STROBE ASSEMBLY IS NOW READY TO JOIN TO TWO GANG OUTLET BOX. SEE STD. DET. T1902, SHEET 2 OF 2.

ISSUED:		STANDARD DETAIL		DETAIL NO.
8/92		PRE-EMPT STROBE ASSEMBLY		T 1903
REVISED:				
11/04				SHEET 1 OF 1

TS19-3.DWG 12/07/00 15:12

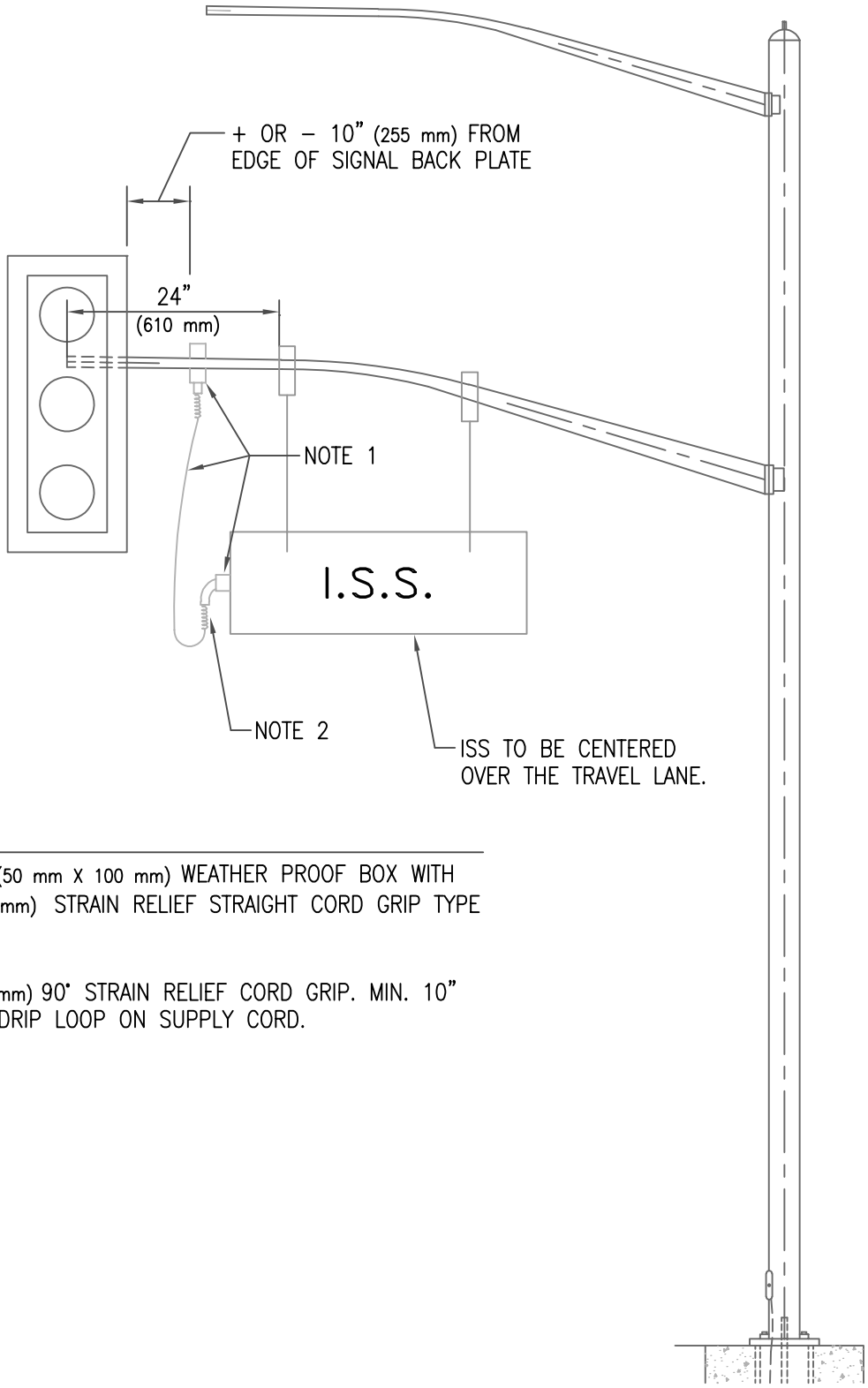

NOTES:

1. 2" X 4" (50 mm X 100 mm) WEATHER PROOF BOX WITH 1/2" (13 mm) STRAIN RELIEF STRAIGHT CORD GRIP TYPE SO 16/3.

2. 1/2" (13 mm) 90° STRAIN RELIEF CORD GRIP. MIN. 10" (255 mm) DRIP LOOP ON SUPPLY CORD.

ISSUED:		STANDARD DETAIL		DETAIL NO.
4/00		ILLUMINATED STREET SIGN (I.S.S.) INSTALLATION		T 1904
REVISED:				
10/02				SHEET 1 OF 1

TS19-4.DWG 12/18/00 14:54

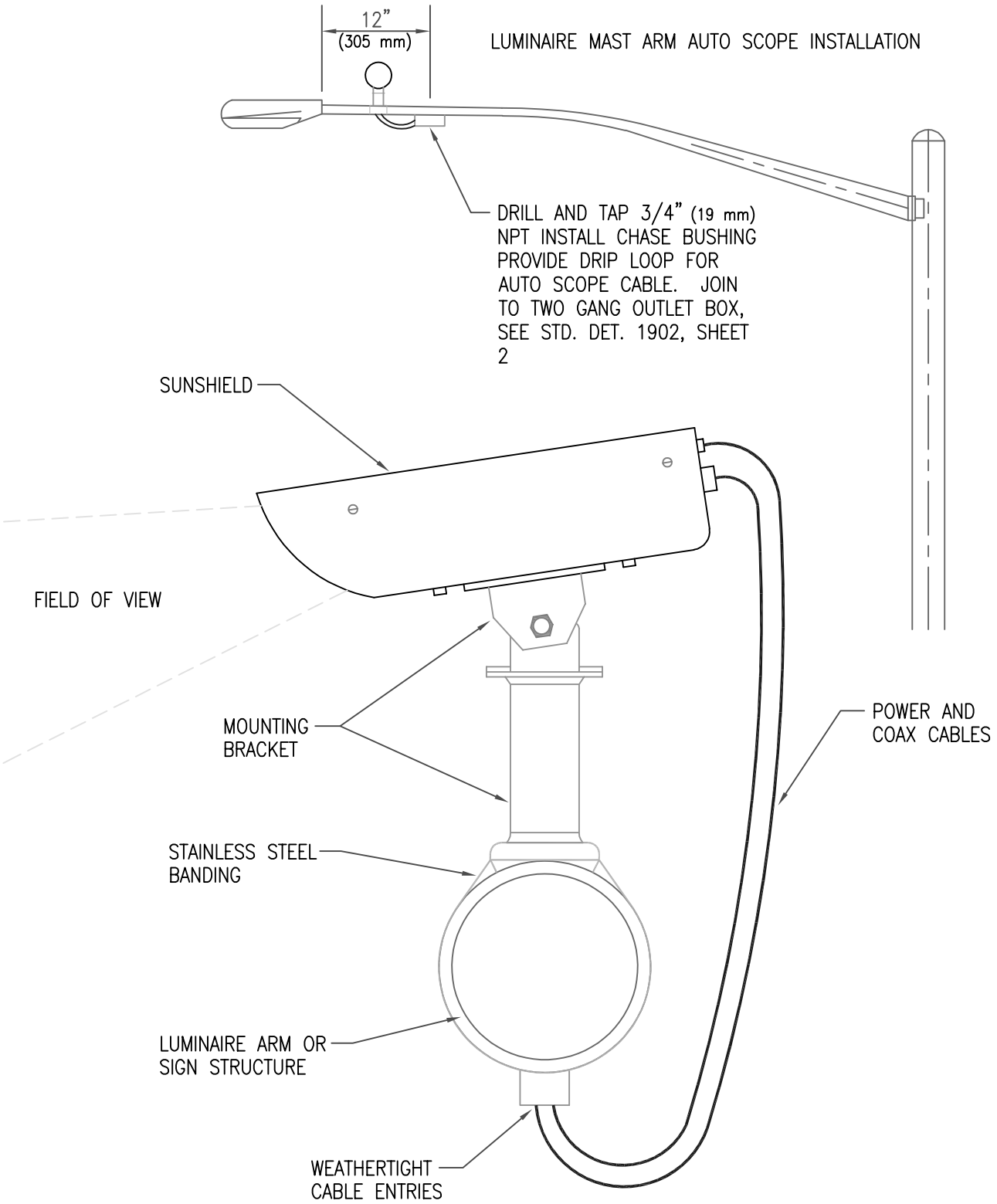

INSTALLED CAMERA

ISSUED:		STANDARD DETAIL		DETAIL NO.
1/00		VIDEO DETECTION SYSTEM AUTO SCOPE INSTALLATION		T 1905
REVISED:				
11/04				SHEET 1 OF 1

TS19-5.DWG 12/07/00 15:16

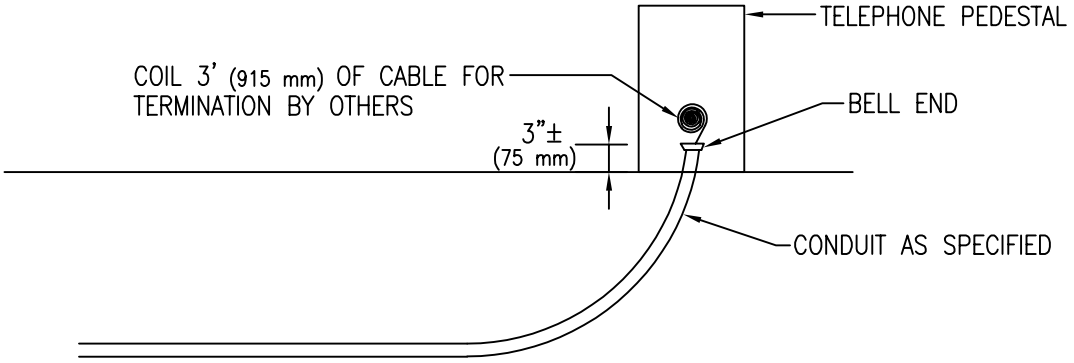

UNDERGROUND DROP

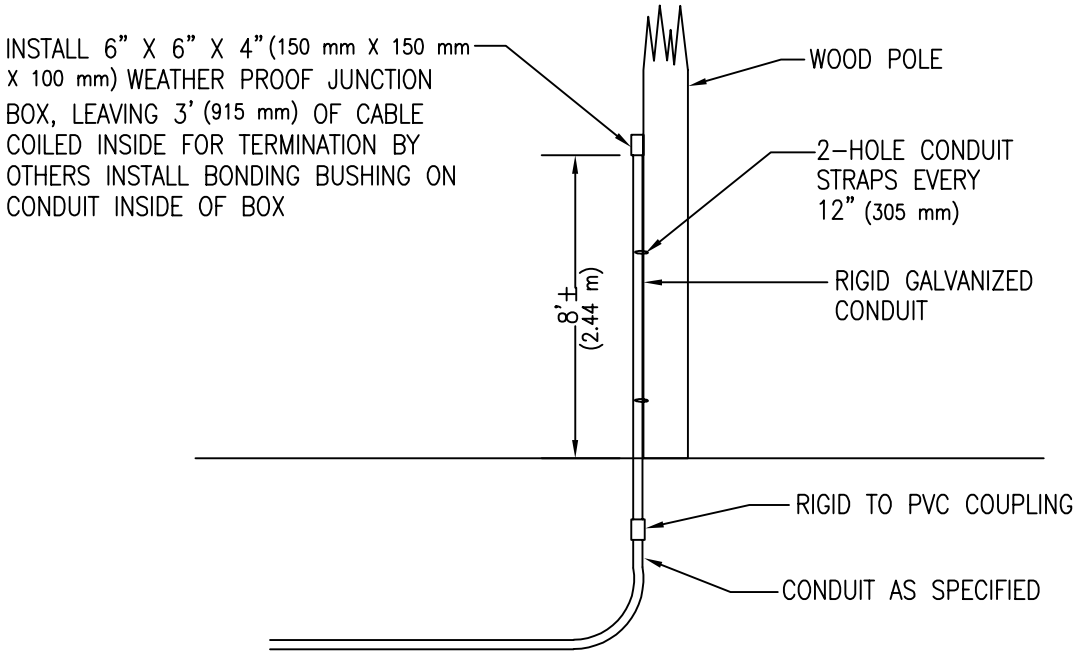

OVERHEAD DROP

ISSUED:		STANDARD DETAIL		DETAIL NO.
8/92		TELEPHONE DROP		T 2001
REVISED:				
10/02				SHEET 1 OF 1

TS20-1.DWG 12/07/00 15:16

WOOD SUPPORT POLE INSTALLATION

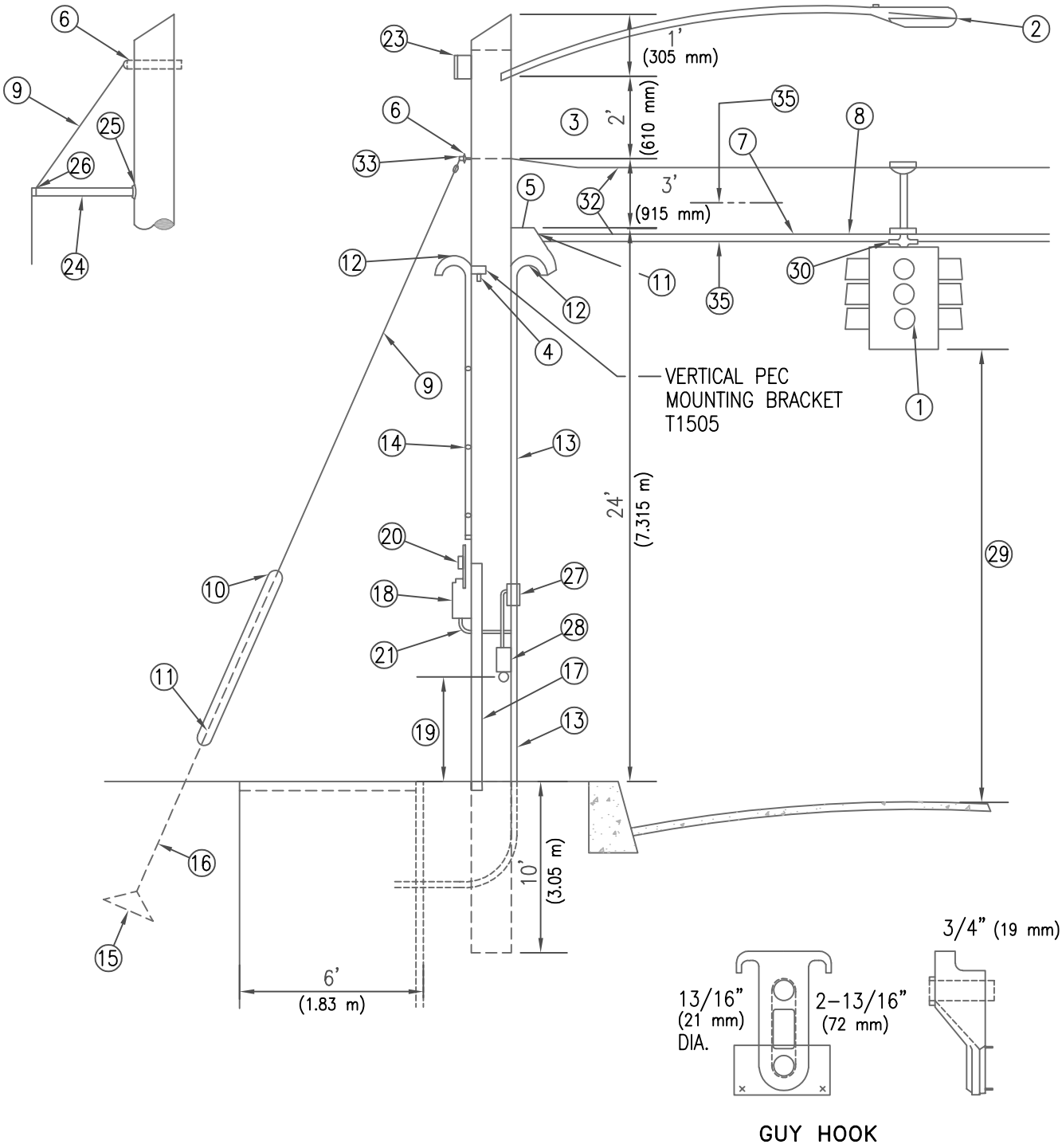

ISSUED:		STANDARD DETAIL		DETAIL NO.
8/92		SPAN WIRE TRAFFIC SIGNAL INSTALLATION		T 2101
REVISED:				
11/04				SHEET 1 OF 3

TS21-1-1.DWG 12/07/00 15:19

STEEL SUPPORT POLE INSTALLATION

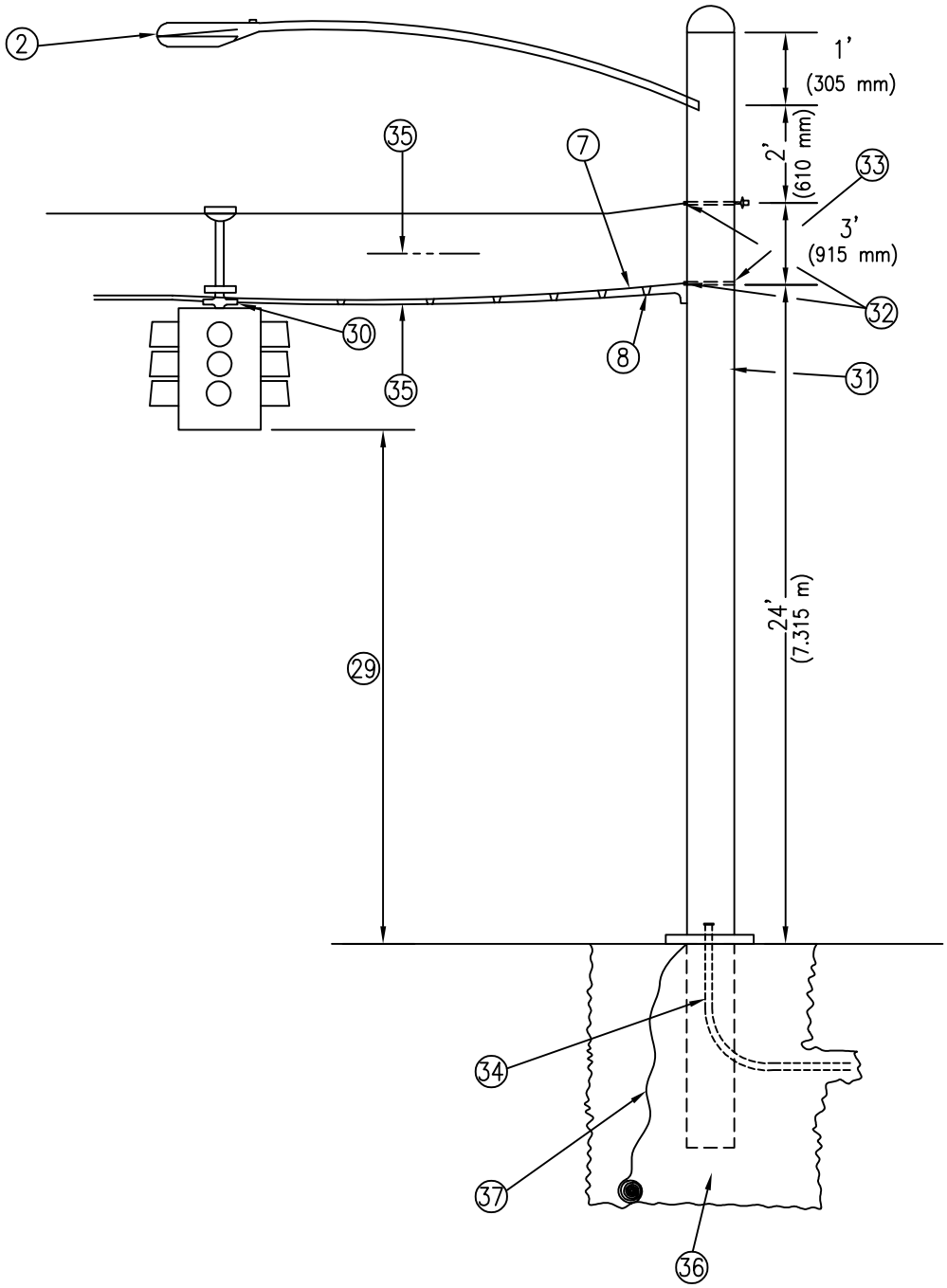

ISSUED:		STANDARD DETAIL		DETAIL NO.
8/92		SPAN WIRE TRAFFIC SIGNAL INSTALLATION		T 2101
REVISED:				
10/02				SHEET 2 OF 3

TS21-1-2.DWG 12/07/00 15:20

1. TRAFFIC SIGNAL ASSEMBLY – AS SPECIFIED.
2. LUMINAIRE AND MAST ARM – AS SPECIFIED.
3. SIGNAL AND LUMINAIRE CONDUCTORS.
4. WOOD POLE – 40' (12.2 m) – CLASS 3 OR BETTER.
5. 5/8" (16 mm) THIMBLE EYE – BOLTS WITH DOUBLE NUTS, AN ALTERNATE TO POLE BAND IF SPECIFIED.
6. GUY HOOK – CHANCE CAT. #C203–0168 OR EQUAL, AN ALTERNATE TO POLE BAND IF SPECIFIED.
7. SPAN WIRE – 3/8" (9.5 mm) STRANDED UTILITY GRADE.
8. WIRE MESSENGER RING – 15" (380 mm) CTR TO CTR OR TIE WRAPS IF SPECIFIED.
9. GUY WIRE – 3/8" (9.5 mm) STRANDED UTILITY GRADE.
10. GUY WIRE GUARD – REFLECTORIZED.
11. 6" (150 mm) – 3 BOLT WIRE CLAMP WITH 5/8" (16 mm) BOLTS – 2 EACH REQUIRED.
12. SERVICE HEAD.
13. CONDUIT – SHALL NOT CONFLICT WITH OTHER TRAFFIC SIGNAL EQUIPMENT TO BE MOUNTED ON POLE.
14. CONDUIT STRAPS.
15. 12" (305 mm) ANCHOR CONE.
16. ANCHOR ROD 5/8" X 8' (16 mm X 2.44 m).
17. GROUND WIRE #4 BARE COPPER – IN 1/2" (13 mm) EMP – INTO SERVICE DISCONNECT OR 10' (3.05 m) FROM GROUND.
18. CONTROL UNIT IF SPECIFIED.
19. 50–1/2" (13 mm)
20. DISCONNECT SWITCH AS SPECIFIED.
21. CONDUIT FITTING WITH BLANK COVER AND GASKET.
22. 3/4" X 10' (19 mm X 3.05 m) COPPER – WELD GROUNDING ROD WITH GROUND ROD CLAMP.
23. SERVICE CLEVIS AS REQUIRED.
24. 2" (50 mm) GALV. PIPE – APPROX. 5' (1.525 m) LONG.
25. SIDEWALK GUY POLE PLATE – HUBBARD 1501 OR EQUAL.
26. SIDEWALK GUY WIRE CLAMP END FITTING HUBBARD 1502 OR EQUAL.
27. "C" TO "T" CONDUIT FITTING.
28. PUSH BUTTON ASSEMBLY.
29. 18' (5.485 m) ±6" (150 mm) TO BOTTOM OF SIGNAL BACKPLATE.
30. TERMINAL HANGER (REQ'D, WITH ALL OPTIONS).
31. 30' (9.145 m) STEEL POLE AS SPECIFIED.
32. PERFORM GRIPS – 1 END ONLY, 3 BOLT CLAMPS REQUIRED ON OTHER END.
33. 4 SEGMENT POLE BAND WITH ROLLERS IS THE PREFERRED METHOD OF ATTACHMENT.
34. P.V.C. CONDUIT SIZE AS SPECIFIED.
35. 5% SAG OF SPAN AT HEIGHT OF POLE.
36. FOUNDATION 36" X 8' (915 mm X 2.44 m). IF SOIL HAS BEEN DISTURBED, FOUNDATION SHALL BE 36" X 10' (915 mm X 3.05 m).
37. #4 GROUND WIRE – 25' (7.62 m) AT BOTTOM OF FOUNDATION.
38. ALL POLES AND MAST ARMS TO BE STRAIGHT AND TRUE.

ISSUED:		STANDARD DETAIL		DETAIL NO.
8/92	CITY OF TUCSON FOUNDED 1775	SPAN WIRE TRAFFIC SIGNAL INSTALLATION	THE SEAL of PIMA COUNTY ARIZONA	T 2101
REVISED: 10/02				SHEET 3 OF 3

TS21–1–3.DWG 12/07/00 15:20

SANITARY SEWER
DETAIL INDEX

DETAIL NO.	TITLE
GENERAL	
A-1	GUIDELINES FOR VARIANCES
A-2	WASTEWATER PUMPING SYSTEMS
A-3	GRAVITY OR PRESSURE SEWER
A-4	LANDSCAPING
A-5	FLOW MANAGEMENT PLAN
GRAVITY MAINS	
WWM 101	PIPE SUPPORTED SANITARY SEWER
WWM 102	SEWER MAIN REPAIR
WWM 103	COUPLING UNLIKE PIPE MATERIALS TOGETHER
WWM 104	RIGID PIPE BEDDING FOR SANITARY SEWERS
WWM 105	FLEXIBLE PIPE BEDDING FOR SANITARY SEWER
WWM 106	GENERAL NOTES – SEWER CONSTRUCTION
WWM 107	DEFLECTION TESTING MANDREL
WWM 108	SEWER/WATER CROSSING DETAILS
WWM 109	SANITARY SEWER EASEMENT
WWM 110	RIGHT ANGLE TURN AROUND
WWM 111	TYPICAL SEWER EASEMENT SECTION
MANHOLES, CLEANOUTS & APPURTENANT ITEMS	
WWM 201	MANHOLE BASE (21" DIA. PIPE AND SMALLER)
WWM 202	MANHOLE BASE (24" TO 48" DIA. PIPE)
WWM 203	MANHOLE STUB-OUT AND BLOCK-OUT
WWM 204	STANDARD BRICK MANHOLE*
WWM 205	PRECAST CONCRETE MANHOLE (4' DIA.)*
WWM 206	STANDARD 5' DIA. PRECAST CONCRETE MANHOLE (5' DIA.)*
WWM 207	SHALLOW MANHOLE
WWM 208	FLAT TOP MANHOLE (4' DIA.)
WWM 209	FLAT TOP MANHOLE – TYPE"A"
WWM 210	FLAT TOP MANHOLE – TYPE"B"
WWM 211	FLAT TOP MANHOLE – TYPE"C"
WWM 212	CONCRETE MANHOLE COLLAR (UNPAVED AREAS)
WWM 213.0	MANHOLE AND MANHOLE FRAME/COVER (STANDARD)
WWM 213.1	MANHOLE FRAME AND COVER (24")
WWM 213.2	MANHOLE FRAME AND COVER (24" WATERPROOF)
WWM 213.3	MANHOLE FRAME AND COVER (24" BOLTED)
WWM 214.0	MANHOLE FRAME AND COVER (30")
WWM 214.1	MANHOLE FRAME AND COVER (30" WATERPROOF)
WWM 214.2	MANHOLE FRAME AND COVER (30" BOLTED)

SANITARY SEWER
DETAIL INDEX (CONT.)

DETAIL NO.	TITLE
MANHOLES, CLEANOUTS & APPERTENANT ITEMS (CONT.)	
WWM 216	MANHOLE STEP – TYPE 1
WWM 217	MANHOLE STEP – TYPE 2
WWM 218	MANHOLE STEP – TYPE 3
WWM 219	CONCRETE WEIR
WWM 220	REDWOOD GATE
WWM 221.1	MANHOLE VENT ASSEMBLY
WWM 221.2	MODIFIED MANHOLE VENT ASSEMBLY
WWM 222	PRECAST CONCRETE MANHOLE SAFETY LANDING
WWM 223	MANHOLE JOINT REINFORCEMENT
WWM 224	SEWER MARKER
WWM 225	MONITORING STATION
MODIFICATION OF EXISTING SYSTEM FACILITIES	
WWM 301	CONNECTION TO EXISTING MANHOLE (NON–REINFORCED BASE)
WWM 302	CONNECTION TO EXISTING MANHOLE (REINFORCED BASE)
WWM 303	NEW MANHOLE OVER AN EXISTING SEWER
WWM 304	BRICK MANHOLE GRADE ADJUSTMENT
WWM 305	PRECAST CONC. MANHOLE GRADE ADJUSTMENT
WWM 306	FLAT TOP MANHOLE GRADE ADJUSTMENT
WWM 307	MANHOLE CHANNEL COVER
HOUSE CONNECTIONS	
WWM 401	HOUSE CONNECTION SEWER (H.C.S.)
WWM 402	H.C.S. CONNECTION TO MANHOLE
WWM 404	H.C.S. REROUTING
PRESSURE SEWER SYSTEM	
WWM 504	MARKER TAPE LOCATION
WWM 505	PRESSURE MAIN CONNECTION TO MANHOLE
WWM 507	PRESSURE SEWER LOCATION MONUMENT
WWM 509	PRIVATE PUMP STATION DUAL OUTLET AIR INJECTION PANEL
WWM 510	SHADE AND EQUIPMENT SUPPORT STRUCTURE
WWM 511	TEST STATION

*DENOTES DETAIL NO LONGER ACCEPTED FOR NEW CONSTRUCTION

GUIDELINES FOR VARIANCES

THE DIRECTOR OF THE WASTEWATER MANAGEMENT DEPARTMENT AND HIS DESIGNATED REPRESENTATIVES MAY ALLOW VARIANCES TO THE DESIGN STANDARDS AND STANDARD DETAILS WHEN STRICT ADHERENCE WOULD LESS ADEQUATELY PROVIDE FOR THE DEVELOPMENT, MAINTENANCE, EFFICIENCY, AND EFFECTIVENESS OF PUBLIC SANITARY SEWERAGE FACILITIES. THE VARIANCE SHALL ENSURE THE OBJECTIVES OF THE DESIGN STANDARD OR STANDARD DETAIL TO WHICH THE VARIANCE IS GRANTED ARE SUBSTANTIALLY MET.

VARIANCES MAY BE ALLOWED WHEN:

* DESIGN SLOPES LESS THAN THE MINIMUM STANDARD WOULD ELIMINATE THE NEED FOR A PUMP STATION;

* A SUBSTITUTION FOR A CHANGE IN STANDARD MATERIAL RESULTS IN THE USE OF A MATERIAL WHICH CAN BE CLEARLY DEMONSTRATED TO BE EQUAL TO OR OF SUPERIOR QUALITY;

* A STRICT ADHERENCE TO A DESIGN STANDARD OR STANDARD DETAIL WOULD BE IMPRACTICAL OR IMPOSSIBLE BECAUSE OF FIELD CONDITIONS SUCH AS EXISTING UTILITY FACILITIES OR INCOMPATIBLE EXISTING SEWERAGE FACILITIES; OR

* AN EMERGENCY SITUATION PROHIBITS STRICT ADHERENCE TO A DESIGN STANDARD OR STANDARD DETAIL.

DESIGN CONSIDERATIONS
FOR
PUBLIC WASTEWATER PUMPING SYSTEMS

1. GENERAL COMMENTS – CONTACT THE ENGINEERING STAFF AT THE PIMA COUNTY WASTEWATER MANAGEMENT DEPARTMENT FOR A RECENT EXAMPLE OF PLANS AND SPECIFICATIONS OF WASTEWATER PUMP STATIONS THAT WOULD BE APPROPRIATE FOR YOUR PARTICULAR PROJECT. PLANS AND SPECIFICATIONS FOR YOUR PARTICULAR PROJECT WOULD THEN NEED TO BE DEVELOPED TO REFLECT SITE SPECIFIC CONDITIONS. SOME GENERAL ITEMS THAT SHOULD BE CONSIDERED IN THE DESIGN OF ALL WASTEWATER PUMPING SYSTEMS ARE LISTED BELOW. PLEASE NOTE THAT THIS LIST IS LIMITED IN SCOPE AND THAT MORE ITEMS WILL NEED TO BE ADDRESSED DURING THE DESIGN PROCESS. REFERENCE SHOULD ALSO BE MADE TO THE DESIGN STANDARDS SECTION OF THE PIMA COUNTY WASTEWATER MANAGEMENT DEPARTMENT'S MANUAL OF ENGINEERING STANDARDS AND PROCEDURES. MORE INFORMATION IS GIVEN IN THAT SECTION ABOUT WASTEWATER PUMPING SYSTEM REQUIREMENTS AND DESIGN CONSIDERATIONS.

2. DESIGN REPORT – ONE SHOULD BE DONE FOR ALL PUMP STATIONS. A SAMPLE REPORT WILL BE PROVIDED IF NEEDED.

3. ELECTRICAL ISSUES – ELECTRICAL PLANS AND SPECIFICATIONS SHOULD BE PREPARED FOR THE WASTEWATER PUMP STATION.

4. WET WELL SIZE – MAKE SURE THE MINIMUM PUMP RUNNING TIME IS MET AND THE PUMP CYCLE TIME IS ADEQUATE.

5. TOTAL DYNAMIC HEAD – INCLUDE STATIC HEAD FROM THE LOW WATER LEVEL, FRICTION LOSS IN PIPE AND FITTINGS, AND ELEVATION OF DISCHARGE POINT.

6. BACKUP POWER – A BACKUP GENERATOR SHOULD BE PROVIDED.

7. ODOR CONTROL – SOME METHOD TO PREVENT HYDROGEN SULFIDE GENERATION AND TO CONTROL ODOR MUST BE INCLUDED IN THE DESIGN. AERATION OR CHEMICAL INJECTION ARE TWO COMMON METHODS THAT HAVE BEEN USED IN THE PAST.

   A. AERATION – IF THIS METHOD OF HYDROGEN SULFIDE PREVENTION IS CHOSEN, CALCULATIONS SHOULD BE INCLUDED IN THE DESIGN REPORT SHOWING THE SIZE OF COMPRESSOR NEEDED.

      i. PROVIDE SPECIFICATIONS ON THE AERATION CABINET. MAKE SURE THE CABINET HAS SOUND ATTENUATION AND HEAT VENTING.

      ii. A SPARE COMPRESSOR MUST BE PROVIDED FOR EACH SIZE OF COMPRESSOR.

      iii. MAKE SURE THAT THE PROPER FLOW METERING AND VALVING SETUP IS PROVIDED.

      iv. THE TOP OF THE AIR DIFFUSER IN THE WET WELL SHOULD BE LOCATED ABOUT TWO (2) INCHES (50 mm) BELOW THE LOW WATER LEVEL. DO NOT ALLOW THE AIR DIFFUSER TO BE PLACED ON THE FLOOR OF THE WET WELL.

B. CHEMICAL INJECTION – IF THIS METHOD IS CHOSEN, CALCULATIONS SHOULD BE INCLUDED IN THE DESIGN REPORT SHOWING THE AMOUNT OF CHEMICALS NEEDED AND THE ASSOCIATED COST OF OPERATION AND MAINTENANCE. OTHER ISSUES TO CONSIDER ARE LISTED BELOW:

i. HOW HAZARDOUS IS THE CHEMICAL TO WORK WITH?

ii. WHAT IS THE CAPITAL COST OF THE EQUIPMENT?

iii. WHAT REFERENCES HAVE YOU CHECKED OUT TO CONFIRM THAT IT HAS BEEN SUCCESSFULLY USED IN OTHER SIMILAR SITUATIONS?

8. EMERGENCY CELLULAR TELEPHONE – EQUIPMENT MUST BE ABLE TO RELAY OVERFLOW ALARMS AND FLOW VALUES FROM THE FLOW METER.

9. BUOYANCY – THE WET WELL AND VALVE CHAMBER SHOULD BE DESIGNED TO RESIST IT. THERE SHOULD BE AN EXTENSION OF THE BASE SLAB BEYOND THE WALL OF THE WET WELL OR THE VALVE CHAMBER FOR A GIVEN DISTANCE. THIS CAN VARY SOMEWHAT DEPENDING UPON THE CHAMBER DIMENSIONS.

10. DIFFERENCE IN ELEVATION BETWEEN INFLUENT LINE'S INVERT ELEVATION AND THE ELEVATION OF THE FLOOR OF THE WET WELL – THIS VALUE IS NORMALLY 5.5 FEET (1.7 m) BUT CAN BE ADJUSTED AS NEEDED TO PREVENT BACKWATER PONDING IN THE INFLUENT LINE.

11. VALVES – RESILIENT WEDGE GATE VALVES ARE GENERALLY USED.

12. PUMPS – MAKE SURE THAT AS ACCEPTABLE QUALITY PUMP IS SPECIFIED AND THAT REPAIR SERVICES ARE AVAILABLE IN TUCSON.

A. MAKE SURE A SPARE PUMP IS PROVIDED AND DELIVERED TO PIMA COUNTY WASTEWATER MANAGEMENT. THIS PUMP WILL BE USED WHEN IT IS NECESSARY TO REPLACE A PUMP THAT MUST BE REMOVED FROM THE WET WELL FOR REPAIRS.

B. AVOID SMALL IMPELLER THRULETS TO MINIMIZE CLOGGING.

13. FLOW METER – THE FLOW METER SHOULD BE A MAG METER WITH A SPECIAL INTERIOR ABRASION RESISTANT LINING THAT CAN BE SUBMERGED BELOW SEVERAL FEET OF WATER AND CONTINUE FUNCTIONING PROPERLY. MAKE SURE THAT IF AIR IS INJECTED INTO THE PRESSURE SEWER THAT IT DOES NOT TRAVEL THROUGH THE MAG METER. IT WILL CAUSE ERRONEOUS READINGS.

14. SAFETY ISSUES – IN GENERAL, MAKE SURE THAT THE DESIGN PLANS AND SPECIFICATIONS MEET CURRENT OSHA REQUIREMENTS. THIS WOULD INCLUDE SUCH THINGS AS NOTED BELOW.

A. INSTALLATION OF SAFETY RAILING AND CHAINS AROUND HINGED DOORS.

B. ACCESSIBILITY TO THE WET WELL AND THE VALVE CHAMBER.

C. EASE OF CONFINED SPACE ENTRIES.

D. NEED OF EXPLOSION–PROOF ELECTRICAL APPURTENANCES.

E. ADEQUATE SPACE FOR TRIPOD USE AROUND WET WELL AND VALVE CHAMBER ENTRY LOCATIONS.

15. PRESSURE SEWER –

A. DETERMINE WHICH MATERIAL SHOULD BE USED.

AVOID SAGS THAT WILL ALLOW SOLIDS TO SETTLE OUT AND GENERATE HYDROGEN SULFIDE.

B. IF YOU DO HAVE A SAG, MAKE SURE THAT THERE IS A CLOSURE VALVE ON THE DOWNSTREAM END TO KEEP THE PRESSURE SEWER FULL AND ALLOW FLUSHING TO OCCUR.

C. THE PRESSURE SEWER SHOULD HAVE STATION AND ELEVATIONS SHOWN TO MAKE SURE THAT IT GETS BUILT TO LINE AND GRADE AND DOES NOT JUST FOLLOW THE NATURAL GROUND PROFILE.

D. SHARP BENDS (90 DEGREES) SHALL BE AVOIDED UNLESS OTHERWISE APPROVED BY PIMA COUNTY WASTEWATER MANAGEMENT.

E. MAKE SURE THAT THE PRESSURE SEWER ENTERS THE DISCHARGE MANHOLE IN SUCH A MANNER THAT A SMOOTH TRANSITION OF FLOW FROM THE PRESSURE FLOW MODE TO THE GRAVITY FLOW MODE IS ACHIEVED. THIS WILL HELP TO MINIMIZE ODOR AND CORROSION PROBLEMS.

F. TRACER WIRE AND TEST STATIONS SHALL BE INSTALLED TO AID IN LOCATING THE PRESSURE SEWER BOTH HORIZONTALLY AND VERTICALLY. PRESSURE SEWER MONUMENTS SHALL BE LOCATED AT ALL POINTS WHERE THERE IS A CHANGE IN HORIZONTAL DIRESTION.

16. DUCTILE IRON PIPE (DIP)

A. ALL DUCTILE IRON PIPE, FITTINGS AND METAL COUPLINGS SHALL HAVE BOTH A POLYETHYLENE INTERIOR LINING AND POLYETHYLENE EXTERIOR WRAPPING OR APPROVED EQUALS.

B. SAND BEDDING SHOULD BE USED FOR ALL DUCTILE IRON PIPE THAT HAS THE LOOSE POLYETHYLENE WRAP.

17. VELOCITY THROUGH PRESSURE SEWER – ARIZONA ADMINISTRATIVE CODE R18-9-E301.D.4.a. CALLS FOR 3 TO 7 FPS. (0.9 to 2.1 m/sec) WE RECOMMEND THAT A MINIMUM OF 4 FPS (1.2 m/sec) BE USED.

18. RESTRAINED JOINTS – THE APPROPRIATE LENGTH OF RESTRAINED JOINT PIPE SHOULD BE PROVIDED AT ALL HORIZONTAL AND VERTICAL CHANGES IN PIPE DIRECTION TO RESIST THE RESULTING THRUST FORCES.

19. PRESSURE SEWER LOCATION MONUMENTS – LOCATE AT ALL POINTS WHERE THERE IS A CHANGE IN HORIZONTAL DIRECTION.

20. AIR RELEASE/VACUUM RELIEF (AR/VR) VALVES – MAKE SURE THAT A COMBINATION AIR RELEASE/VACUUM RELIEF VALVE IS PLACED AT ALL HIGH POINTS WHERE AIR WOULD ACCUMULATE.

A. THE AIR DISCHARGE AND AIR INTAKE DIAMETERS MUST BE SPECIFIED. ONLY BALL VALVES SHOULD BE USED ON THE AIR RELEASE/VACUUM RELIEF VALVES. GATE VALVES ARE NOT ACCEPTABLE.

B. LOCATE THE AR/VR VALVES ABOVE GROUND IN A VANDAL-SECURE, MAINTENANCE-ACCESSIBLE ENCLOSURE. ALLOW ADEQUATE SPACE FOR ENTRIES AND MAINTENANCE.

C. CALL FOR THE FLUSHING HOSE ACCESSORY.

21. WATER HAMMER – CHECK FOR CONDITIONS WHICH MAY CAUSE WATER HAMMER TO OCCUR. IN PARTICULAR, MAKE SURE THE PRESSURE SEWER CAN HANDLE BOTH THE OPERATING PRESSURE AND THE PRESSURE FROM THE WATER HAMMER.

22. DISCHARGE MANHOLE – THE DISCHARGE MANHOLE SHOULD BE LINED.

    A. USE T–LOCK LINING IF IT IS A NEW MANHOLE. USE A COATING THAT IS APPROVED BY THE PIMA COUNTY WASTEWATER MANAGEMENT DEPARTMENT (PCWMD) IF IT IS AN EXISTING OR NEW MANHOLE. INCLUDE APPROPRIATE NOTES AS NEEDED.

    B. INCLUDE A REFERENCE TO STANDARD DETAIL WWM 505 WHICH SHOWS HOW A PRESSURE SEWER IS CONNECTED TO A DISCHARGE MANHOLE.

23. GRIT MANHOLE – INCLUDE A GRIT MANHOLE UPSTREAM OF THE GRAVITY SEWER TO CATCH SAND AND GRAVEL IF POSSIBLE. YOU MAY NEED TO PROVIDE SOME AERATION TO THIS MANHOLE IF YOU HAVE VERY LOW FLOWS.

24. EROSION & LONG TERM DEGRADATION – CHECK FOR SCOUR, EROSION AND LONG TERM DEGRADATION IF THE PRESSURE SEWER CROSSES ANY DRAINAGE WAYS OR WASHES.

25. UTILITIES – CHECK FOR CONFLICTS WITH OTHER UTILITIES, PARTICULARLY POTABLE WATER LINES AND WELLS.

DESIGN & CONSTRUCTION GUIDELINES FOR PUBLIC GRAVITY OR PRESSURE SEWERS

1. LOCATION

a. ALL NEW GRAVITY AND PRESSURE SEWERS SHALL BE DESIGNED AND LOCATED SO AS TO BE POSITIONED WITHIN THE PAVED PORTIONS OF NEW ROADS AND STREETS TO THE MAXIMUM EXTENT POSSIBLE. REQUESTS TO DEVIATE FROM THIS GUIDELINE MAY BE APPROVED ON A CASE-BY-CASE BASIS, BY PIMA COUNTY WASTEWATER MANAGEMENT IF NO OTHER FEASIBLE ALTERNATIVE EXISTS. THIS GUIDELINE SHALL BE FOLLOWED EVEN IN THE CASE WHERE ADJACENT LOTS MAY BE REQUIRED TO UTILIZE PRIVATE, ON-SITE MECHANICAL WASTEWATER PUMPING SYSTEMS TO ACHIEVE PHYSICAL CONNECTION TO THE PUBLIC GRAVITY SANITARY SEWER LOCATED BENEATH A STREET SURFACE.

b. THE LOCATION OF SEWERS IN THE FOLLOWING AREAS/CIRCUMSTANCES SHALL BE AVOIDED UNLESS SPECIFIC APPROVAL IS OBTAINED FROM PIMA COUNTY WASTEWATER MANAGEMENT ON CASE-BY-CASE BASIS:

1) ACROSS, THROUGH, AND BETWEEN LOTS

2) WITHIN OR ALONG A WASH OR WASH ENVIRONMENT

3) CROSSING A WASH OUTSIDE OF A ROAD RIGHT OF WAY

4) WITHIN A COMMON AREA

5) WITHIN EASEMENTS AREAS UNDISTURBED BY DEVELOPMENT

2. ACCESSIBILITY

a. IF APPROVAL IS GRANTED FOR A GRAVITY SEWER TO BE LOCATED OUTSIDE THE PAVED PORTION OF A ROAD, STREET OR ALLEY, A STABILIZED DRIVING SURFACE (PREFERABLY CENTERED ALONG/ATOP THE PROPOSED SEWER) SHALL BE PROVIDED. THE DRIVING SURFACE SHALL BE 16' (4.9 m) WIDE AND A PORTLAND CEMENT OR LIME STABILIZED ABC SURFACE OR APPROVED (100 MINIMUM OF 4" mm) EQUAL.

b. MAINTENANCE VEHICLE ACCESS TO SEWER MANHOLES AND CLEANOUTS SHALL BE UNRESTRICTED. SANITARY SEWER EASEMENTS SHALL HAVE A MINIMUM 20'(6 M) VERTICAL CLEARANCE FOR THE FULL WIDTH OF THE EASEMENT FROM VEGETATION OR STRUCTURES THAT ARE OBSTACLES TO TRAVEL. ANY BENDS IN THE EASEMENT SHALL HAVE A MINIMUM 55'(17 M) OUTSIDE RADIUS AND A MINIMUM 35' (11 M) INSIDE RADIUS. THE WIDTH OF THE EASEMENT WHERE A BEND OCCURS MUST BE AT LEAST 20'(6 M) WIDE. DEAD ENDS REQUIRE A RIGHT ANGLE TURN AROUND (SEE STANDARD DETAIL WM 210). ABRUPT CHANGES IN VERTICAL GRADE (INCLUDING VERTICAL CURB) SHALL BE AVOIDED. A RELATIVELY LEVEL 6' (1.8 M) DIAMETER AREA SHALL BE PROVIDED AROUND A MANHOLE TO ALLOW WORKING ROOM FOR SETUP OF A TRIPOD AND RELATED SAFETY EQUIPMENT WHEN MANHOLE ENTRY IS REQUIRED. MANHOLES LOCATED IN UNPAVED AREAS SHALL HAVE A PROTECTIVE CONCRETE COLLAR, MEETING THE REQUIREMENTS OF STANDARD DETAIL WM 212, PLACED AROUND THEM. A 20' (6 M) DIAMETER UNRESTRICTED (NO LANDSCAPING) AND GENERALLY LEVEL AREA SHALL BE PROVIDED AROUND A MANHOLE OR CLEANOUT TO ALLOW MANEUVERING ROOM FOR MAINTENANCE VEHICLES. ANY PAVING WITHIN THIS ACCESS AREA MUST BE SUFFICIENT TO SUPPORT COMMERCIAL VEHICLES (H20 LOADING).

c. THE WIDTH OF SEWER EASEMENT SHALL BE THE GREATER OF EITHER 20' (6 m) OR TWICE THE DEPTH OF THE SEWER MEASURED FROM TOP OF MANHOLE TO ITS INVERT ROUNDED TO THE NEAREST FIVE FEET (1 m).

d. NO STRUCTURES OR OTHER IMPEDIMENTS; INCLUDING GAZEBOS, WATER FOUNTAINS, SCULPTURES, ETC.; THAT WILL PREVENT OR INHIBIT VEHICULAR ACCESS SHALL BE ALLOWED ANYWHERE WITHIN THE LIMITS OF THE SEWER EASEMENT. STEEP SURFACES, GRADES OR ABRUPT CHANGES SUCH AS VERTICAL CURBS OR RETAINING WALLS SHALL NOT BE PERMITTED. SURFACE TREATMENTS COMPRISED OF SHARP ROCK THAT COULD DAMAGE TIRES, LOOSE MATERIAL THAT COULD BE THROWN UP AND DAMAGE A VEHICLE OR INJURE SOMEONE STANDING NEARBY, SLOPE CONTROL VEGETATIVE GROUND COVER THAT COULD CAUSE VEHICLE TIRES TO LOSE TRACTION, OR SOFT SAND/SOIL THAT COULD CAUSE A MAINTENANCE VEHICLE TO BECOME STUCK ARE NOT ACCEPTABLE. TREES OR LARGE CACTI THAT WOULD REQUIRE TIME TO PHYSICALLY REMOVE BEFORE A MAINTENANCE VEHICLE COULD PROCEED ARE PROHIBITED. SMALL SHRUBS AND GROUND COVER ON FLAT SURFACE AREAS THAT CAN BE DRIVEN OVER OR THROUGH ARE ACCEPTABLE PROVIDED THEY DO NOT CONTAIN SPIKES OR THORNS THAT CAN DAMAGE TIRES OR INJURE PEOPLE.

e. VERTICAL CLEARANCE OF 20' (6 m) MINIMUM SHALL BE MAINTAINED AT ALL TIMES WITHIN THE FULL WIDTH OF THE EASEMENT. THIS INCLUDES THE VERTICAL CLEARANCE TO ANY OVERHEAD WIRES AND BUILDING ROOF OVERHANGS. TREES OR OTHER VEGETATION PLANTED ADJACENT TO THE EASEMENT MUST NOT BE ALLOWED TO ENCROACH ON THE EASEMENT. PIMA COUNTY WASTEWATER MANAGEMENT DEPARTMENT (PCWMD) PERSONNEL SHALL HAVE THE AUTHORITY TO CUT BACK OR REMOVE ANY OFFENDING VEGETATION.

f. WALLS THAT CROSS THE SEWER EASEMENT MUST HAVE EASEMENT WIDTH GATES WITH A 20'(6 m) VERTICAL CLEARANCE AND SHALL HAVE A LOCKING SYSTEM THAT INCLUDES A PCWMD PADLOCK. THE PROPERTY OWNER SHALL MAINTAIN THE GATES SO THAT THEY ARE FULLY OPERABLE AT ALL TIMES. THE GATES AND THE EASEMENT MUST BE FULLY ACCESSIBLE TO PCWMD PERSONNEL, HEAVY SANITARY SEWER MAINTENANCE VEHICLES AND CONSTRUCTION EQUIPMENT 24 HOURS PER DAY 7 DAYS PER WEEK.

g. PIMA COUNTY OR THEIR CONTRACTOR HAS THE RIGHT TO INSTALL ANYWHERE WITHIN THE EASEMENT AREA TEMPORARY OR PERMANENT UNDERGROUND OR ABOVE GROUND FACILITIES THAT MAY BE REQUIRED TO MONITOR, OPERATE, MAINTAIN, REPAIR OR REPLACE THE PUBLIC SANITARY SEWER SYSTEM, OR UNDER EMERGENCY CONDITIONS, PUMP OR OTHERWISE CONVEY SANITARY SEWAGE.

h. PCWMD ASSUMES NO LIABILITY FOR DAMAGE TO OR REMOVAL OF ANY VEGETATION, ABOVE GROUND OR BELOW GROUND FACILITIES, SURFACE TREATMENTS, MATERIALS, EQUIPMENT, OR STRUCTURES PLACED WITHIN THE EASEMENT OR WITHIN 20' (6 m) ABOVE THE SURFACE OF THE EASEMENT BY ANYONE OTHER THAN PIMA COUNTY OR THEIR CONTRACTOR.

i. THE PROPERTY OWNER SHALL BE LIABLE FOR INJURY TO PERSONNEL AND/OR DAMAGE TO MAINTENANCE VEHICLES OR CONSTRUCTION EQUIPMENT THAT RESULTS FROM CONTACT WITH ANY PROHIBITED ENCROACHMENTS ANYWHERE WITHIN THE FULL WIDTH OF THE PUBLIC SANITARY SEWER EASEMENT OR WITHIN 20'(6 m) ABOVE THE SURFACE OF THE EASEMENT, OR FROM ANY ACTIONS NECESSARY TO REMOVE SUCH ENCROACHMENTS FROM THE EASEMENT. LIABILITY FOR INJURY OR DAMAGE INCLUDES PERSONNEL AND EQUIPMENT OF PIMA COUNTY AND THEIR CONTRACTORS.

j. PIMA COUNTY WILL ENDEAVOR TO PROVIDE ADVANCE NOTICE TO THE PROPERTY OWNER OF THE NEED TO UTILIZE/ACCESS THE EASEMENT OR THE SEWER. HOWEVER, THE COUNTY HAS NO OBLIGATION TO PROVIDE SUCH ADVANCE NOTICE AND SHALL NOT PROVIDE NOTICE UNDER EMERGENCY CONDITIONS.

k. TEMPORARY STORAGE OF VEHICLES, EQUIPMENT, OR MATERIALS BY THE PROPERTY OWNER IS NOT ALLOWED WITHIN THE EASEMENT WITHOUT THE PRIOR WRITTEN PERMISSION OF PCWMD.

3. ABANDONMENT OF EXISTING SEWERS AND MANHOLES:

a. EXISTING SEWER PIPE OR MANHOLES THAT ARE TO BE ABANDONED SHALL BE CLEARLY DENOTED ON THE PLANS. WHEREVER POSSIBLE, THE REACHES OF SEWER THAT ARE TO BE ABANDONED SHALL BE REMOVED COMPLETELY. IF A REACH OF SEWER IS TO BE ABANDONED IN PLACE, IT SHALL BE FILLED WITH GROUT. ALL SEWER LINES AND ALL MANHOLES THAT ARE ABANDONED IN PLACE SHALL BE MARKED WITH AN ABANDONMENT MARKER IN ACCORDANCE WITH STANDARD DETAIL WM 508. THIS ABANDONMENT MARKER SHALL ALSO BE PLACED AT ALL HORIZONTAL ANGLE POINTS ON ALL ABANDONED PRESSURE SEWER LINES.

c. MANHOLES THAT ARE TO BE ABANDONED SHALL BE DEMOLISHED TO AT LEAST 3'(910 mm) BELOW FINISHED GRADE. THE MANHOLE FRAME AND COVER SHALL BE SALVAGED AND DELIVERED TO THE FIELD OPERATIONS DIVISION OFFICE AT 3390 N. RICHEY BLVD. CONTACT THE FIELD OPERATIONS DIVISION (326-4333) TO ARRANGE FOR AND COORDINATE THE DELIVERY OF SALVAGED ITEMS.

d. DEBRIS THAT IS GENERATED BY THE REMOVAL OF EXISTING SEWER LINES OR MANHOLES SHALL BE REMOVED FROM THE SITE BY THE CONTRACTOR AND DISPOSED OF AT THE APPROPRIATE PIMA COUNTY SOLID WASTE FACILITY. DISTURBED AREAS SHALL BE BACKFILLED WITH SELECT MATERIAL AND COMPACTED IN ACCORDANCE WITH THE STANDARDS SET BY THE AGENCY CONTROLLING THE RIGHT-OF-WAY BUT IN ALL CASES A MINIMUM OF 95 % OF THE STANDARD PROCTOR DENSITY IN ACCORDDANCE WITH THE PROVISIONS OF ASTM D 698.

4. MANHOLES AND CLEANOUTS:

a. THE FRAME AND COVER OF EVERY EXISTING PUBLIC SANITARY SEWER MANHOLE AND CLEANOUT THAT WILL REMAIN IN SERVICE SHALL BE ADJUSTED TO MATCH THE NEW FINISHED GRADE. PER STANDARD DETAIL WM 304, 305 AND 306, IT MAY BE NECESSARY TO RECONSTRUCT THE MANHOLE CONE OR RISER SECTION WHEN THE MANHOLE IS ADJUSTED TO GRADE. PCWMD ALSO MAY REQUIRE THAT THE MANHOLE FRAME AND COVER BE REPLACED IF THE AGE, CONDITION, OR TYPE OF THE EXISTING FRAME AND COVER WARRANTS SUCH REPLACEMENT.

b. MANHOLES AND CLEANOUTS THAT ARE LOCATED IN AREAS SUBJECT TO STORMWATER RUNOFF SHALL HAVE WATERPROOF FRAMES AND COVERS (AS SHOWN IN STANDARD DETAIL WM 213.0 - 214.3). WATERPROOF FRAMES AND COVERS MAY ALSO BE INSTALLED ON MANHOLES IN PEDESTRIAN AREAS TO REDUCE THE POTENTIAL FOR ODOR COMPLAINTS IF SUCH PLACEMENT DOES NOT ADVERSELY IMPACT AIR EXCHANGE WITHIN THE SEWER. A MANHOLE VENT ASSEMBLY (AS SHOWN IN STANDARD DETAIL WM 221) MAY ALSO BE REQUIRED.

c. IF THE MANHOLE IS IN AN UNPAVED AREA, A PROTECTIVE CONCRETE COLLAR SHALL BE PLACED AROUND THE MANHOLE AS SHOWN IN STANDARD DETAIL WM 212. A SEWER LINE MARKER SHALL ALSO BE INSTALLED PER STANDARD DETAIL WM 224 AT THE DISCRETION OF PCWMD.

d. PER STANDARD DETAIL WM 307, THE CONTRACTOR IS REQUIRED TO COVER THE BENCH DURING THE ADJUSTMENT PROCESS IN ORDER TO PREVENT DEBRIS FROM ENTERING THE SEWAGE FLOW.

e. CONTACT THE PCWMD MAPS AND RECORDS SECTION AT 740-6602 TO ARRANGE FOR A PERMIT TO ADJUST AN EXISTING MANHOLE. THEN, CONTACT PCWMD FIELD ENGINEERING (740-2651) TO ARRANGE FOR AN INSPECTION OR TO GET ANSWERS FOR ANY QUESTIONS CONCERNING ADJUSTMENTS TO EXISTING MANHOLES.

5. BACKWATER VALVES LOCATED IN MANHOLES FOR ODOR CONTROL:

a. DUE TO THE POTENTIAL FOR TURBULENCE INDUCED OFF-GASSING IN LARGE SEWERS, WHENEVER A CONNECTION IS MADE TO AN 18 INCH (450 mm) DIAMETER OR LARGER SEWER, WHERE THE NEW PIPE IS 12 INCHES (300 mm) OR LESS IN DIAMETER, A BACKWATER VALVE SHALL BE INSTALLED ON THE NEW INCOMING LINE. ALSO, THE WALLS OF THE SEWER MANHOLE INTO WHICH THE NEW CONNECTION IS MADE MAY REQUIRE APPLICATION OF CORROSION PROTECTION COATING, AND A NEW WATERPROOF MANHOLE COVER MAY NEED TO BE INSTALLED. THE COATING AND BACKWATER VALVE REQUIREMENTS MAY BE OBTAINED FROM THE PCWMD ENGINEERING DESIGN SECTION, 201 N. STONE, 8TH FLOOR, 740-6500.

6. RECONSTRUCTION OF BRICK MANHOLES:

a. WHEN RECONSTRUCTION OF AN EXISTING BRICK MANHOLE IS REQUIRED, REMOVE THE TAPERED SECTION OF EXISTING BRICK. IF BRICK OR MORTAR OF THE STRAIGHT (VERTICAL) WALL IS DETERIORATED, CONTINUE REMOVING WALL UNTIL SOLID MATERIAL IS REACHED. THE PCWMD INSPECTOR SHALL INSPECT THE EXISTING BRICK WALL PRIOR TO RECONSTRUCTION IN ORDER TO VERIFY THAT THE CONDITION IS SATISFACTORY. USE STANDARD PRECAST SECTIONS TO REBUILD THE MANHOLE TO GRADE. A LEVELING RING MAY NEED TO BE FORMED AND POURED BEFORE THE PRECAST SECTIONS CAN BE SET ON THE BRICK WALLS.

7. CLEARANCE BETWEEN WATER AND SEWER:

a. Per Arizona Administrative Code Title 18, Chapter 4 (R18-4-502), new water lines must be at least 2 feet (610 mm) above existing gravity sanitary sewer lines and 6 feet (1.8 m) above pressure sanitary sewer lines, measured from outside of pipe to outside of pipe. When parallel, the horizontal separation must be at least 6 feet (1.8 m). If field conditions do not permit adherence to these standards, or the water line will be built below the sanitary sewer, the sanitary sewer must be replaced with ductile iron pipe or approved equal. Pima County/City of Tucson Standard Detail WM 108 shows the requirements. Please show the limits of the replacement or encasement in plan view.

Facilities that cross at less than 45° are considered parallel. Since the standards are outside of pipe to outside of pipe and dimensioning convention is centerline to centerline, the minimum horizontal separation must be dimensioned as 6'(1.8 m) plus 1/2 the outside diameter of each pipe.

8. LININGS OR COATINGS OF MANHOLES FOR CORROSION CONTROL:

a. All new public sanitary sewer manholes that will be installed as part of this project and all existing public sanitary sewer manholes that will be modified as part of this project that are located on public sanitary sewer lines 18"(450 mm) or larger in diameter or that are located on smaller tributary lines within 200' (61 m) of an 18" (450 mm) or larger line shall have corrosion resistant linings or coatings. Contact the Design Section Manager (740-6500) for lining or coating specifications.

9. Construction near manholes:

Do not pile construction materials within 10' (3.1 m) of a sanitary sewer manhole. The contractor must contact PCWMD's Field Operations Division (Richey Yard, 326-4333) at least 48 hours in advance to request permission to temporarily block or restrict access to an active public sanitary sewer manhole. The contractor shall indicate the nature of the planned activity, and the type and length of time that access will be blocked or restricted.

10. Reduction of cover over an existing sanitary sewer:

a. If the ground surface elevation over an existing public sanitary sewer is lowered enough to reduce the cover over the sewer pipe to less than 4' (1.22 m) the involved reach of sewer, or portion thereof, it must be replaced with ductile iron pipe or approved equal. The lowest elevation attained during construction will govern, not the finished grade. This standard applies to reconstruction of streets, regrading of easements, excavations required for the installation of such things as box culverts, or wherever heavy construction or compaction equipment will be used directly over the sanitary sewer.

11. Damage to existing facilities during construction:

a. Any damage to a PCWMD facility, including dropping debris down a manhole, must be reported immediately to either Field Engineering (740-2651) or Field Operations (326-4333). In the event that the damage occurs during non-business hours, contact the Pima County Sheriff's Communications Center at 295-4595 or 791-4911 and request that a PCWMD representative be dispatched to the site.

12. Ductile iron pipe, fittings and couplings requirements:

a. All ductile iron pipe, fittings and metal couplings which are not supported by piles shall be wrapped in 8 mil (200 μm) polyethylene sheeting as per ANSI/AWWA C105/A21.5.

b. The contractor shall supply a certification from the pipe manufacturer (or coating applicator if certain conditions are met) that states that the pipe and the lining meet the current Standards and Specifications of the Pima County Wastewater Management Department. The lining material shall be a hybrid novolac epoxy such as SP2000W, polyethylene, a combination of polyethylene and fusion bonded epoxy or another approved lining.
The certification shall state specifically the following, with the name of the approved lining material inserted into the blank spaces:

1) All ductile iron pipe and fittings have an (name of lining material) interior lining of 40 mils (1.0 μm) (35 mils (890 μm) minimum) in the barrel area and 10 mils (250 μm) minimum on the exterior of the spigot end.

2) Each piece of pipe and each fitting has been checked for holidays utilizing a testing voltage of 7500 volts with a dry conductive probe in the barrel area and a testing voltage of 67 1/2 volts with a wet sponge in both the bell area and the exterior of the spigot end and there are none.

3) The (name of lining material) lining extends from the bottom of the gasket socket in the bell to a point on the exterior of the spigot end of the pipe where the next pipe gasket would overlap the lining.

4) All (name of lining material) used meets the current Specifications set by Pima County Wastewater Management for this material.

5) A maximum lining thickness of 15 mils(380 μm) has been applied to both the gasket seat groove in the bell area and the exterior of the spigot end.

c. If the contractor makes a field cut of (name of lining material) lined pipe, he shall comply with the recommendations of the coating manufacturer in applying an (name of lining material) coating to the pipe end and in allowing proper drying time before pipe assembly. In all cases, as a minimum, a 10 mil (250 μm) coating of (name of lining material) shall be applied to the pipe end and shall overlap the original (name of lining material) lining by four inches (100 mm) and extend around the end of the pipe and along the outside of the pipe a minimum of ten inches (250 mm) and shall also be allowed to dry before pipe assembly. In addition, the overlapped surface of the existing (name of lining material) lining shall be roughed up to produce a 3 to 5 mil (75-130 μm) profile over the entire surface. The end result of this process is to secure proper adhesion for the new (name of lining material) coating. The (name of lining material) used shall meet the current specifications of Pima County Wastewater Management.

d. The following information as a minimum will be shown on the exterior of each piece of ductile iron pipe:

1) Name of lining applicator

2) Name of lining

3) Thickness of lining

4) Date of lining application

5) Class of ductile iron pipe

6) Name of ductile iron pipe manufacturer

7) Date of ductile iron pipe manufacture

8) Lot # or Serial #

e. All ductile iron pipe that is supplied shall not have any exterior coating unless called for on the construction plans, the construction specifications or as called for in the notes listed above (such as on the exterior 10 inches (250 mm) of the spigot end of the pipe).

13. HCS requirements:

a. Since House Connection Sewers (HCS's) are not part of the public sanitary sewer system, they are not required to be Blue Staked. Any HCS encountered during construction shall be protected, repaired, or rerouted, as the situation dictates, at no expense to Pima County Wastewater Management or the property owner.

b. Existing HCS's that will be reconnected into a 12" (300 mm) or larger pipe must be reconnected at a new or existing manhole per PC/COT SD WM 301. A backflow preventer will be required if the existing line is 18" (450 mm) or larger in diameter.

14. Drop manhole requirements:

a. External drop inlets are not allowed due to maintenance concerns. Provide a steep segment of DIP with a special abrasion resistant hybrid novolac epoxy lining and the associated extra manhole. In certain circumstances such as an extremely deep manhole surrounded by numerous utilities, we may allow the use of an internal drop within a 5' (1.52 m) diameter or larger manhole. Contact the PCWM Design Section at 740–6500 for more information in regard to either of these options.

15. Irrigation components location relative to manholes:

a. Landscape irrigation system components that might be damaged if a heavy vehicle were to drive over them should not be placed in close proximity to a sanitary sewer manhole, nor within the area that the vehicle will traverse in order to access the manhole.

16. See PCWM detail on Sanitary Sewer Landscaping Guidelines for landscaping type and location restrictions.

17. Manhole and cleanout numbers:

a. Maps are available from the Maps and Records Section that show the general location of the existing sanitary sewer facilities and a unique identification number. PCWMD has assigned this unique identification number to each existing public sanitary sewer manhole and cleanout, and has created an electronic attribute database for each pipe segment. It is required that the manhole and cleanout numbers be added to the plans for future cross-reference to the sanitary sewer database and the County's electronic basemaps. The existing manhole and cleanout numbers are shown on our sewer basemaps. More detailed information regarding these sewer base maps may be obtained from our Maps and Records Section, 5th floor, Public Works Building, 201 N. Stone (740-6602). In addition, the actual location of the sewers often varies from that stated on the plans which means that field verification will be required.

18. Manhole entry or access permit:

a. If the contractor or consultant must enter or access a manhole, a no-cost Manhole Entry Permit must be obtained from PCWMD Maps & Records (5th Floor, 201 N. Stone) prior to making the entry or removing the manhole cover.

19. Construction permit requirements:

a. A Project Construction Permit must be obtained from PCWMD at least 72 hours prior to commencing work that impacts an active public sanitary sewer. Application for a Project Construction Permit may be made at the Wastewater Maps and Records Counter, 5th Floor, 201 N. Stone. All applicable Wastewater inspection fees must be paid prior to issuance of the permit. Three sets of final approved plans must be submitted to PCWMD prior to issuance of the permit. Although most permits can be issued on the day of application, please allow two working days to process and issue the permit. A permit cannot be issued until the plans have been reviewed and approved, in writing, by the Department Director or his designated representative.

20. Pole requirements:

Poles and pole footings shall not be located closer than 2 feet (610 mm)to the outside of a sanitary sewer pipe. If any sanitary sewer lines in a given area are located in close proximity to a proposed pole location, please provide a detail showing how you propose to mitigate any conflict with this standard.

21. Private sewers:

a. The Uniform Plumbing Code authorizes the use of an abutting lot to construct a building sewer [House Connection Sewer (HCS)] provided that a legal easement has been established to the satisfaction of the municipality that administers the code. The Connection Fee Ordinance requires that Pima County Wastewater Management review and approve the location and method of connection to the public sanitary sewer system. The proposed method and location of connection could include the use of a private sanitary sewage collection system that serves more than one parcel. Please submit evidence that there is a properly approved and recorded easement. Also, PCWMD recommends, but does not require, that all parties that share use of the private sanitary sewage collection system enter into and record a joint use and maintenance agreement.

22. See the PCWM detail on Wastewater Flow Management Plan Guidelines for requirements on rerouting wastewater flows.

23. Damaged manhole or cleanout frames and covers:

a. The contractor shall notify PCWMD Field Engineering (740-2651) of any damaged or mismatched manhole or cleanout frames and covers. New frames and covers shall be installed and who pays for the replacements will vary depending upon the situation.

24. Safety:

a. Job site safety is the sole and exclusive responsibility of the general contractor. The general contractor shall exercise complete control over who has access to the job site to assure job site safety. The general contractor's responsibility covers anyone who may have access to the site, including the general contractor's own work force, all subcontractors, vendors and suppliers, support personnel, government officials, and the general public.

25. Speed Bumps:

a. Do not place speed bumps within 10 feet (3.0 m) of a sanitary sewer manhole or cleanout.

26. Storm and sanitary sewer separation:

a. Provide at least 2' (610 mm) of vertical separation between storm drainage facilities and public sanitary sewers. If it is not possible to meet this standard, the sanitary sewer either must be replaced with ductile iron pipe or approved equal. For drainage pipes that parallel the sanitary sewer, stay outside the normal trench areas as shown in PC/COT Standard Details WM 104 & 105. If the drainage pipe is placed below and parallel to the sanitary sewer, maintain at least 2' (610 mm) of horizontal separation. All dimensions are from outside of pipe to outside of pipe measured at the joint. Facilities should cross at no less than 45° whenever possible.

27. See PCWM detail on Sanitary Sewer Landscaping Guidelines for information on traffic circles.

28. City of Tucson water projects within county right-of-way:

a. Under the provisions of the 1979 License Agreement and the 1982 Supplement, the County is obligated to pay 100% of the public sanitary sewer adjustment or relocation costs required by the above referenced project. Because of this, we may object to the design of the project. There may be alternatives that either will reduce or eliminate the need to adjust or relocate existing public sanitary sewer. Please provide evidence that alternatives were considered and a justification for electing the alternative of relocating the existing public sanitary sewer. If adjustment or relocation of public sanitary sewer cannot be avoided, PCWMD reserves the right to make the needed adjustments as authorized by Paragraph II.3 of the 1982 Supplement. Upon completion of the project design, please provide PCWMD with an itemized cost breakdown of the required adjustment or relocation work. PCWMD will review the cost breakdown and notify the City of its decision regarding who will perform the work.

b. Permits will not be issued until these payment obligations are acknowledged.

29. City of Tucson non-water project in City of Tucson right-of-way:

   a. Under the provisions of the 1979 License Agreement and the 1982 Supplement, the County is obligated to pay 50% of the sewer adjustment or relocation costs, other than surface adjustments, required by the above referenced project. Because of this, we may object to the design of the project. There may be alternatives that could either reduce or eliminate the need to adjust or relocate existing public sanitary sewer. Please provide evidence that alternatives were considered and a justification for selecting the alternative of relocating the existing public sanitary sewer. If adjustment or relocation of public sanitary sewer cannot be avoided, PCWMD reserves the right to make the needed adjustments as authorized by Paragraph II.3 of the 1982 Supplement. Upon completion of the project design, please provide PCWMD with an itemized cost breakdown of the required adjustment or relocation work. PCWMD will review the cost breakdown and notify the City of its decision regarding who will perform the work. Pavement replacement, and manhole and cleanout adjustments or reconstruction necessitated by changes in surface conditions are to be broken out separately since they are to be paid for 100 % by the City (Paragraph II.4 of the 1982 Supplement).

   b. Permits will not be issued until these payment obligations are acknowledged.

30. As-built drawings will be required in accordance with Pima County Ordinance 2001-20 (or later versions) and current Arizona Department of Environmental Quality or Arizona Administrative Code rules.

31. Sewer line field verification. When a new manhole is being constructed over an existing sewer line, verification of the horizontal and vertical location is required by both the design consultant and the contractor before the manhole is built. Potholing or other PCWD approved method that actually exposes the pipe is required.

SANITARY SEWER LANDSCAPING GUIDELINES

Both visual and physical vehicular access to public sanitary sewer manhole covers shall be a top priority. All planting and irrigation design shall take into consideration both viable visual and physical access from the closest travel lane to the manhole cover to provide for maintenance purposes. The landscape area between the manhole and the street shall be left open, providing a clear vehicle maintenance access lane width of not less than 16 feet (4.9 m). This lane shall not contain shrubs, trees, boulders, river rock or swales. Trees trunks must be at least 16 feet (4.9 m) from a manhole, and sufficiently distant so that the ultimate canopy will not overhang the access lane or overhang an area within 10 feet (3.0 m) of the manhole cover. The manhole elevation must be a minimum of 2 inches (50 mm) above the finished grade and shall under no circumstances be buried under landscaping or surface materials (decomposed granite, etc.).

In most cases, a wide (2' (600 mm)+/−) concrete collar will be present around the manhole frame and cover. If a concrete collar is not present, it will be added as part of the landscaping project.

All public sanitary sewer lines will be shown on all project plans, including landscaping plans. The intent of the planting plan shall be to keep all parts of trees a minimum of 10 feet (3.0 m) from the outside surfaces of the involved sewer lines. Where limited right−of−way or other setbacks are prohibitive, the following rules shall apply:

1. The depth of the sanitary sewer line shall be noted on the drawings at each manhole or cleanout. In areas where the sanitary sewer line is greater than 8 feet (2.4 m) deep, the Landscape Architect may select certain non−deep rooted trees to be placed within the 10−foot (3.0 m) to 16−foot (4.9 m) setback area, as shown on Detail WWM 111. However, prior written approval from Pima County Wastewater Management (PCWWMD) is required.
2. In areas where the sewer line is less than 8 feet (2.4 m) deep, no tree or deep−rooted shrub shall be placed within the 10−foot (3.0 m) to 16−foot (4.9 m) setback limits. In certain situations, the Landscape Architect may be able to use root barriers or other approved methods to locate deep−rooted trees within the 10−foot (3.0 m) to 16−foot (4.9 M) setback but only with prior written approval from the PCWWMD.
3. Contact PCWWMD for a list of the latest approved native shrubs and trees and their associated setbacks from a sanitary sewer.

Traffic circles are not recommended near or surrounding manholes. If a traffic circle is to be built around a manhole, the following requirements must be adhered to:

1. All posts, fencing, and other manmade physical impediments shall be easily and quickly removable by one person without the need for specialized or heavy equipment.

2. Curbing shall be mountable curb.

3. An area between the manhole and the street shall be left open, providing a straight drive-in vehicle maintenance access lane with a width of not less than 12 feet (3.6 m), with 16 feet (4.9 m) preferred. This access lane shall extend to the center of the manhole cover.

4. Deep rooted trees or other aggressive root vegetation shall be avoided. It will be necessary to provide complete (sides and bottom) root barriers for any plants that have the potential to develop root growth of a breadth and depth that will reach any portion of the sanitary sewer system. Landscaping should be limited to flowers, grasses, shrubs, and other small plants that can either be driven over or removed easily and quickly in the event that the sanitary sewer must be accessed with sanitary sewer maintenance vehicles, personnel and associated equipment or dug up and repaired.

5. No obstruction or vegetation shall be placed within a 3-foot (900 mm) radius of the center of the manhole cover opposite the access lane.

6. The area within a 3-foot (900 mm) radius of the center of the manhole shall be level asphalt, concrete, or brick pavement that can withstand heavy trucks. Loose material such as rock, gravel, or landscape pavers shall not be used in the access area. The alignment of the access strip(s) shall be chosen such that a large maintenance vehicle can be set up over the manhole without blocking the intersection. PCWMD shall be consulted on the alignment of the access strip(s) before finalizing the traffic circle design.

7. Vegetation shall be positioned such that its mature size shall not encroach on the access strip(s) or the area within a 3-foot (900 mm) radius of the center of the manhole cover.

8. Drainage shall be directed away from the manhole cover.

A registered landscape architect shall stamp and sign a certification declaring that the project landscaping plan complies with the above standards and that all trees and plants included in the project will not develop root systems that will reach sewer structures within the project limits, nor will any vegetation, at planting or at maturity, interfere with viable visual and vehicular access to manholes. This certification shall appear on the landscaping plans cover sheet or the project plans cover sheet.

The Municipality having jurisdiction over the involved street/roadway shall be responsible for maintaining all plants and trees placed by the project to comply with the setback and access requirements at all times.

Pima County Wastewater Management reserves the right to take whatever action (cutting, trimming, removal, etc.) is deemed necessary to achieve viable visual and vehicular access to sewer structures. Repair and/or replacement of the disturbed landscaping, whether in medians or in traffic circles, shall be the responsibility of the Municipality having jurisdiction for the involved street/roadway.

WASTEWATER FLOW MANAGEMENT PLAN GUIDELINES

1. Wastewater Flow Management Specification:

The Contractor shall provide for the uninterrupted flow of wastewater around the section or sections of pipe designated to be affected by the construction work. For all projects, the Contractor shall prepare and submit to PCWMD three copies of his wastewater flow management plan, showing the treatment of each affected reach of sewer for approval prior to the notice to proceed.

Wastewater flow management plan submittals shall be made, a minimum of four weeks prior to construction, unless approved otherwise, to each of the following:

Design Engineering Manager
Pima County Wastewater Management Department
100 N. Stone Avenue, 4th Floor
Tucson, Arizona 85701

Field Engineering Manager
Pima County Wastewater Management Department
1313 S. Mission Road
Tucson, Arizona 85713

Operations Manager
Pima County Wastewater Management Department
Richey Operations Yard
3390 N. Richey Boulevard
Tucson, Arizona 85716

Wastewater flow management operations shall not be performed by the Contractor until receipt of written approval from PCWMD Field Engineering. (520–740–2651), PCWMD Field Operations (520–326–4333) and the affected treatment facility (i.e. Roger Road WWTF (520–888–4801) or Ina Road WPCF (520–744–4236)). Once approved, the contractor shall notify each of the above at least 48 hours prior to commencement of any flow management plan.

The Contractor shall, at his expense, obtain all permits necessary for the installation and operation of the wastewater flow management equipment. The Contractor must receive approval from PCWMD of his plan submittal for wastewater flow management operations prior to commencing construction work.

For wastewater flow management plans, gravity type designs are typically preferred over pumped type designs. However, the most appropriate type of wastewater flow management should be used for the project.

The flow management equipment shall be quiet running and shall be equipped with noise suppression apparatus, including, but not limited to: sound boards and engine mufflers. Contractor shall be required to meet the noise abatement requirements of the controlling municipality (usually City of Tucson).

For gravity type wastewater flow management plans the following specifications apply:

- –show influent & discharge points with elevations & stationing on the design plans
- –survey, blue stake, and show the plan and profile on the design plans
- –design sewer pipe plugs for expeditious removal during startup testing
- –submit calculations to verify that the gravity flow management system will be able to handle the peak wastewater flows that are approved by PCWMD

For pumped type wastewater flow management plans the following specifications apply:

- –show suction & discharge points with elevations & stationing on the design plans
- –provide pump performance curves
- –discharge manifolds are acceptable
- –intake manifolds are not acceptable
- –use separate intakes for each pump with debris control
- –structural calculations are required for all aluminum pipe designs
- –suction lines shall be steel reinforced pipe or better
- –provide adequate intake line spacing (center to center) to avoid vortexing.
- –provide high level alarm notification to pagers or cell phones
- –provide redundant air release valves
- –submit calculations to verify suction lift of pumps has not been exceeded
- –provide multiple fuel tanks with 24 hours of fuel supply
- –protect discharge piping from vandalism and vehicular damage
- –butt–fused HDPE is the preferred material for the discharge piping
- –submit calculations to verify that the pumping system will be able to handle the peak wastewater flows that are approved by PCWMD
- –provide containment under each pump, valve, and manifold

The Contractor shall be responsible for insuring that there is no unauthorized discharge or spill of raw sewage as a result of the flow management operation. In the event of a sewage spill the Contractor shall notify the PCWMD Operations Division (520–326–4333), after 5:00pm, weekends, holidays (520–741–4911). In the event of any sewage spill the Contractor will be responsible for the prompt cleanup and disinfecting of the spill to the satisfaction of the PCWMD Operations Manager. In cases where the contractor is not in compliance with mitigation efforts, any assistance provided by PCWMD will be billed to the contractor. The Contractor shall compensate PCWMD for the cost of any fines levied as a result of a spill or unauthorized discharge. Prior to start of construction, the contractor must also prepare a sanitary sewer overflow (SSO) spill prevention plan, include it within his wastewater flow management plan submittal, and obtain plan acceptance from Pima County. The contractor shall provide an on–site disinfectant, meeting EPA and PCWMD specifications for SSO mitigation.

For information regarding measured sewage and storm flows in the subject sewer line, the contractor should contact the PCWMD Planning Services Manager, (520–740–6500). The Contractor is responsible for verifying this information and then providing a sufficient number of pumps to handle the normal peak flows with additional reserve capacity to handle wet weather flows and pump malfunctions.

The Contractor shall provide backup pumps equal in number to 50% of the number of pumps being used and of the same discharge capacity. Any fractional number of pumps will be rounded up to the next higher whole number. Flow management pumps are to be manned by qualified and certified pump personnel 24 hours per day, no unattended operation will be permitted. The Contractor shall be responsible for the periodic inspection of the flow management pipelines and shall provide a written log documenting the time of each inspection.

"Lay-flat" hoses may not be authorized at all locations. Where flow management pipelines cross existing paved residential roads, a ramp over the pipes will be constructed or other arrangements made to insure that local access is maintained to homes and businesses. A minimum of 12 inches of cover will be provided over the top of the flow management pipelines located in areas where vehicular traffic must cross over them. This requirement may be reduced if approved in writing by the Engineer, after the Contractor submits an acceptable cover design. The pipelines at the crossing shall be designed for an H-20 truck loading and have a slope that will permit large tractor trailer and fire apparatus to cross over the ramp safely.

2. Specification for Service Connections and Residential Notices:

The contractor shall notify the residents within the area of the proposed work using a form of "Official Notification." The notification shall be written in the two languages of English and Spanish and distributed. The Contractor shall make all arrangements for one or more neighborhood meetings at least 10 calendar days prior to commencement of work on the project. The contractor's superintendent and PCWMD staff shall attend the meeting(s).

Before beginning work that will affect service connections, the Contractor shall be responsible for definitely determining the locations of all active service connections, and then further identify any business, commercial, high flow, or any other service connections in which flow cannot be interrupted. Records of most service connection locations are available to the Contractor in PCWMD's Maps and Records Section on the 5th Floor of the Public Works Building, 201 N. Stone Avenue. If the information is not available in the Maps and Records Section, the Contractor shall determine the locations by visiting the site, CCTV, dye testing, consulting with the resident/occupant, or other approved methods. The Contractor shall submit a proposed plan for maintaining uninterrupted use of these service connections for the Engineer's approval at least five (5) working days prior to commencing work.

days prior to commencing work.

Prior to commencing work, the Contractor shall notify all residents/businesses whose service connections will be interrupted at least 72 hours in advance of the service interruption. This notification shall be in person, whenever possible, and shall include a pamphlet describing the project, the method of construction, and the approximate date and length of time that the interruption of service will occur. The Contractor's proposed method of notification, as well as the proposed written notification to be used, shall be submitted to PCWMD for review and approval prior to distribution to the public. The Contractor shall confirm the notification again verbally, whenever possible, at least 24 hours before the interruption actually happens. The 24-hour notifications shall include an "Official Notification" approved by the Engineer. The Contractor shall maintain a notification log, which will include the date and time of the notification for all the involved properties, the contact person's name, or if no contact was made, that the information was left at the door. This notification log shall be submitted to PCWMD prior to construction.

The contractor must accommodate the special needs, if any, for continuance of sewer service of the residents/occupants. Also, in general, if sewer service cannot be effectively/fully restored within 24 hours after interruption, then the physical flow management pumping of the house connection must be provided.

The Contractor shall provide portable temporary restroom facilities at the beginning and for the duration of the service interruption. The number of facilities shall be not less than 1 portable restroom per 2 residential units and 1 portable restroom per business. The portable temporary restroom facilities shall be structurally stable and shall be kept in a state of cleanliness and shall include hand washing stations as required. In the case where a handicap facility would be necessary, PCWMD will negotiate with the Contractor to determine a solution.

Prior to commencement of work on the project, the Contractor and PCWMD shall schedule a neighborhood meeting with the Contractor's Superintendent and PCWMD staff in attendance. The purpose of the meeting is to discuss the parameters of the project, and how it will affect the neighborhood residents/businesses. Identification of special requirements for handicapped persons will be addressed.

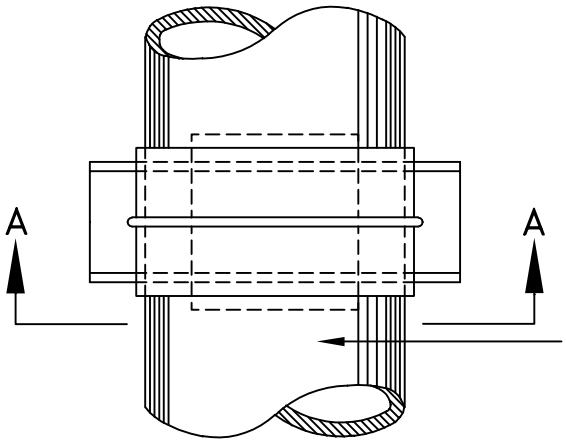

NOTE: SPECIAL CORROSION PROTECTION MEASURES SHALL BE AS SPECIFIED ON THE PLANS

PLAN VIEW

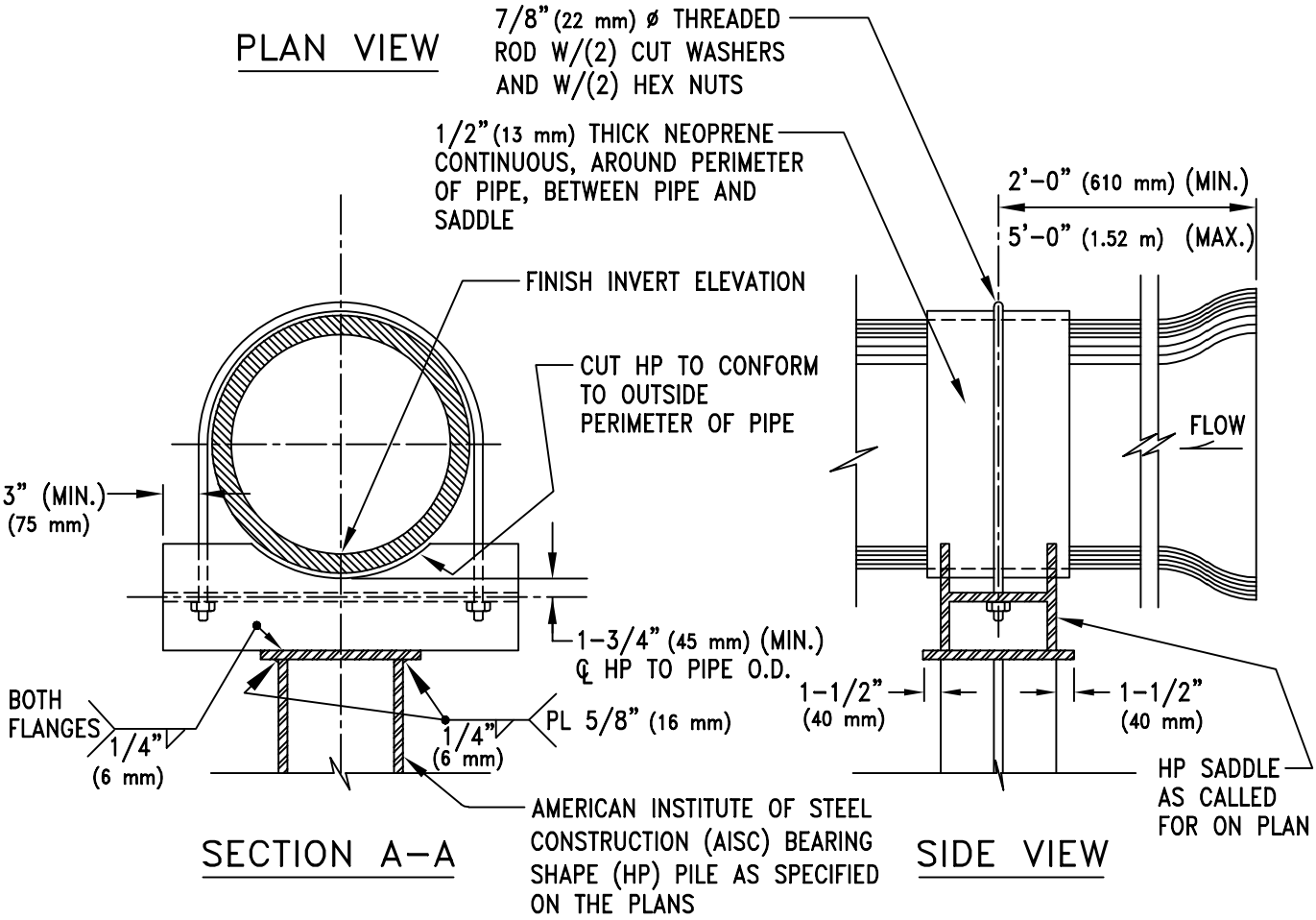

SECTION A–A

SIDE VIEW

NOTES:

1. ALL STEEL PLATES AND SADDLES TO BE ASTM A 36 (A 36M)
2. ALL WELDING ELECTRODES SHALL CONFORM TO ASTM 233-62T AND AWS A5.1 GRADE E-70XX.
3. ALL BOLTS AND NUTS TO BE ASTM A 307 (A 307M)

ISSUED:		STANDARD DETAIL		DETAIL NO.
8/92	CITY OF TUCSON FOUNDED 1776	PILE SUPPORTED SANITARY SEWER	THE SEAL of PIMA COUNTY ARIZONA	WWM 101
REVISED: 7/02				SHEET 1 OF 1

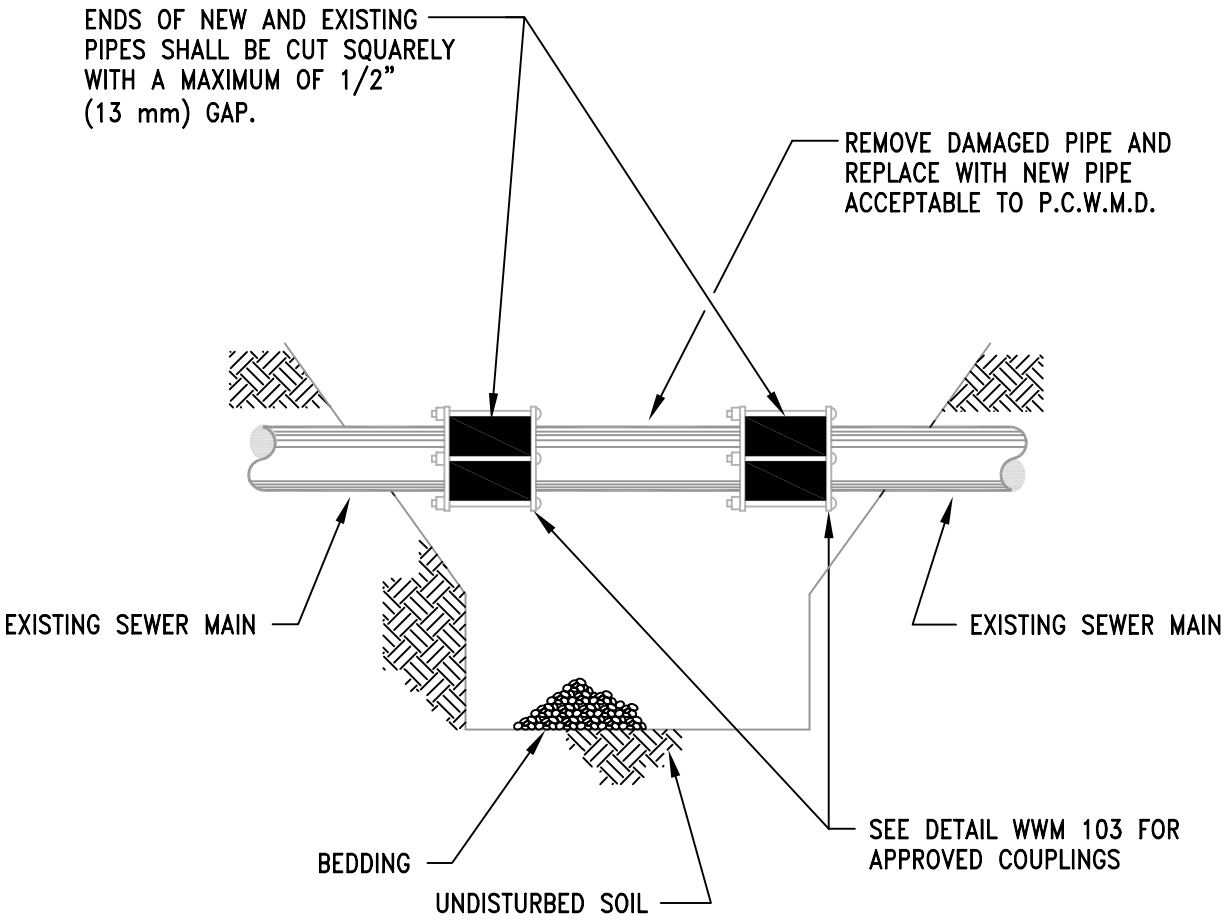

NOTES:

1. IF, WHEN THE DAMAGED PORTION OF THE EXISTING MAIN IS REMOVED, SATURATED SOIL IS FOUND, THE SATURATED SOIL SHALL BE EXCAVATED, REMOVED FROM THE SITE AND REPLACED WITH IMPORTED BEDDING MATERIAL MEETING CURRENT PIMA COUNTY WASTEWATER MANAGEMENT STANDARDS.

2. ALL SEWER REPAIRS SHALL BE INSPECTED BY PCWMD OR AUTHORIZED REPRESENTATIVE PRIOR TO BACKFILL.

3. COMPACTION OF BACKFILL SHALL BE IN ACCORDANCE WITH SECTION 508 OF THE PIMA COUNTY/CITY OF TUCSON STANDARD SPECIFICATIONS FOR PUBLIC IMPROVEMENTS.

ISSUED:		STANDARD DETAIL		DETAIL NO.
8/92		SEWER MAIN REPAIR		WWM 102
REVISED:				
7/02				SHEET 1 OF 1

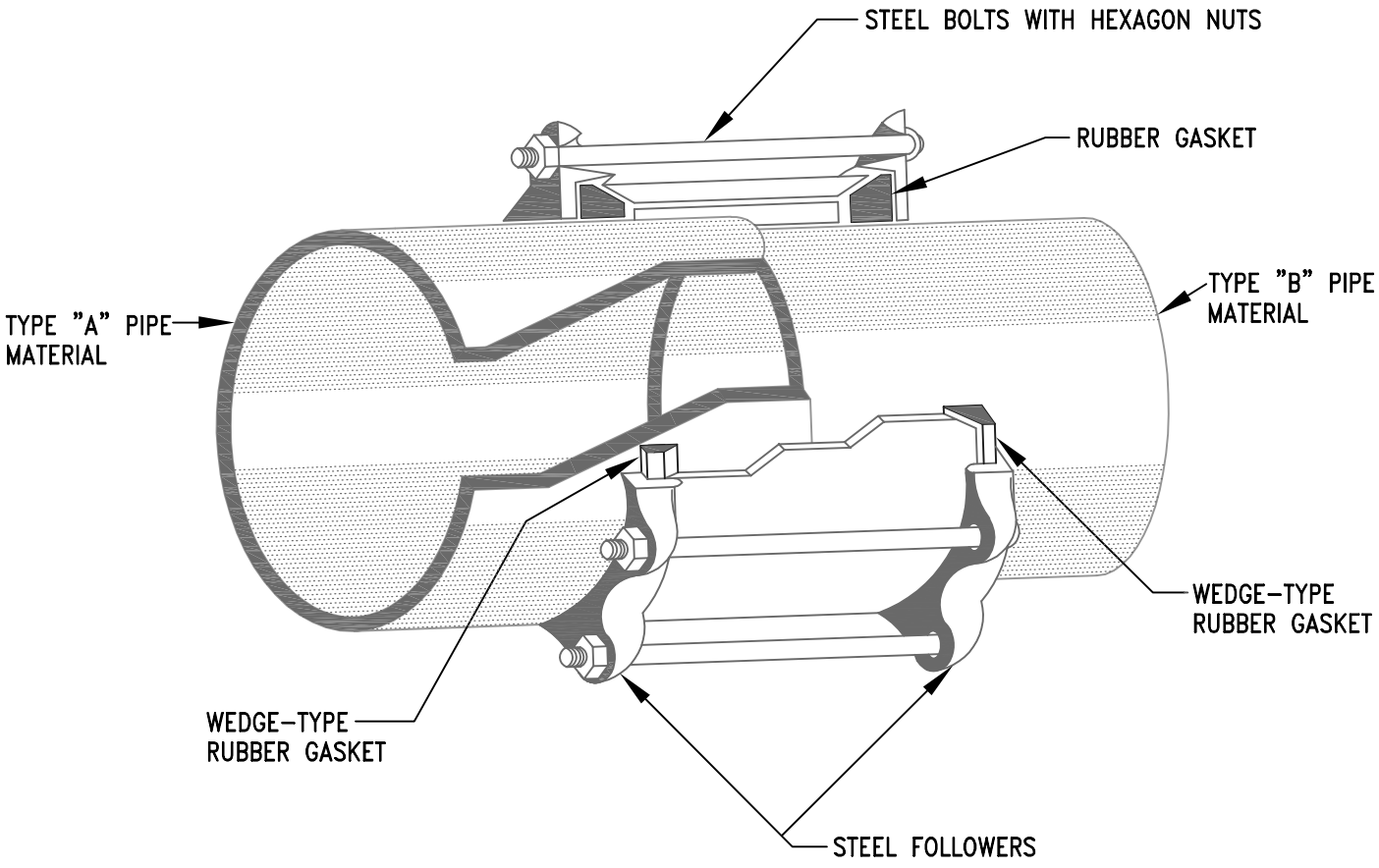

NOTE:

1. PIPES MADE FROM UNLIKE MATERIALS SHALL BE COUPLED TOGETHER USING AN APPROPRIATELY SIZED COATED, STEEL-BARRELED, COMPRESSION TYPE COUPLING AS MANUFACTURED BY SMITH-BLAIR COUPLING, OR AN APPROVED EQUAL TRANSITION COUPLING SUITABLE FOR WASTEWATER APPLICATIONS.

2. MISSION TYPE COUPLINGS MAY BE APPROVED FOR 6" (150 mm) DIAMETER OR 8" (200 mm) DIAMETER PIPE BY PCWMD UNDER SPECIAL CONDITIONS.

3. WHERE THERE IS A 1" (25 mm) DIFFERENTIAL IN INTERNAL DIAMETERS OF THE 2 DIFFERENT PIPE TYPES A SPECIAL CONNECTION APPROVED BY PCWMD SHALL BE USED TO ELIMINATE THE DIFFERENTIAL AT THE INVERT.

4. SEE NOTE #11 OF DETAIL WWM 106 FOR SPECIAL COATING AND WRAP REQUIREMENTS.

ISSUED:		STANDARD DETAIL		DETAIL NO.
8/92	CITY OF TUCSON FOUNDED 1776	COUPLING FOR UNLIKE PIPE MATERIALS	THE SEAL of PIMA COUNTY ARIZONA	WWM 103
REVISED: 7/02				SHEET 1 OF 1

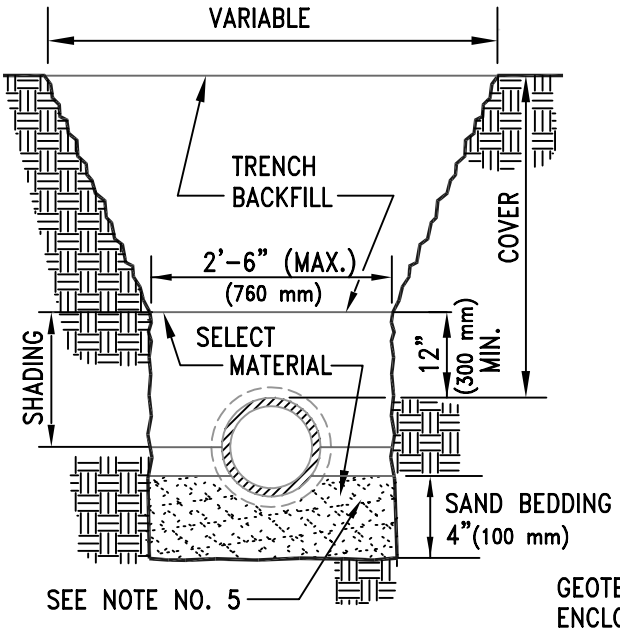

TYPE 1 BEDDING

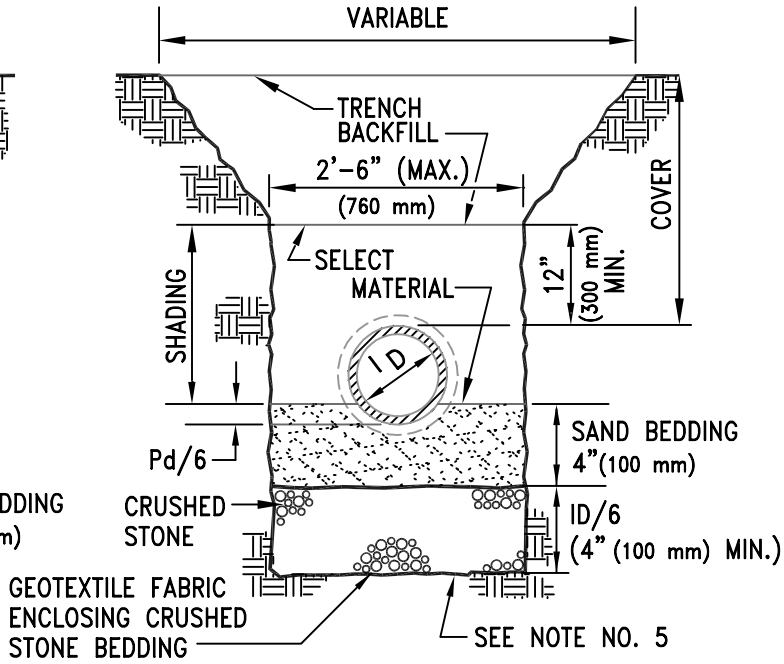

TYPE 2 BEDDING

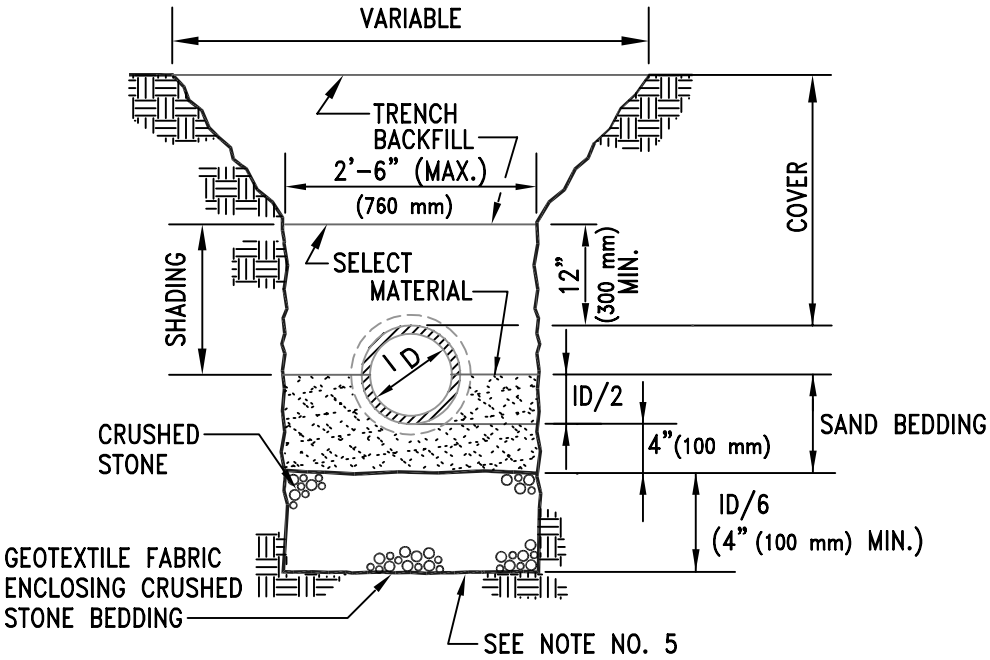

TYPE 3 BEDDING

ISSUED:		STANDARD DETAIL		DETAIL NO.
8/92	CITY OF TUCSON	RIGID PIPE BEDDING FOR SANITARY SEWERS	THE SEAL of PIMA COUNTY ARIZONA	WWM 104
REVISED: 7/02				SHEET 1 OF 2

PIPE COVER LIMITATION TABLE (MAXIMUM TRENCH WIDTH 30" (760 mm) AT TOP OF PIPE)					
PIPE SPECIFICATION			MIN.-MAX. COVER		
SIZE (ID)	MATERIAL	TYPE AND MIN. CLASS	TYPE 1	TYPE 2	TYPE 3
8" (200 mm)	V. C.	EXTRA STR.	4'-10' (1.2 m-3.0 m)	4'-26' (1.2 m-7.9 m)	4'-30' (1.2 m-9.1 m)
10" (250 mm)	V. C.	EXTRA STR.	4'-11' (1.2 m-3.4 m)	4'-30' (1.2 m-9.1 m)	4'-30' (1.2 m-9.1 m)
12" (300 mm)	V. C.	EXTRA STR.	4'-14' (1.2 m-4.3 m)	4'-30' (1.2 m-9.1 m)	4'-30' (1.2 m-9.1 m)
15" (375 mm)	V. C.	EXTRA STR.	4'-20' (1.2 m-6.1 m)	4'-30' (1.2 m-9.1 m)	4'-30' (1.2 m-9.1 m)
8"-16" (200 mm-400 mm)	D. I.	SEE NOTE #3	2'-17' (610 mm-5.2 m)	2'-24' (610 mm-7.3 m)	2'-30' (610 mm-9.1 m)

SIEVE ANALYSIS CHART					
CRUSHED STONE A.S.T.M. D-448, GR.67		SAND		SELECT MATERIAL	
NOM. SIZE	% PASSING	NOM. SIZE	% PASSING	NOM. SIZE	% PASSING
1" (25 mm)	100	1" (25 mm)	100	3" (75 mm)	100
3/4" (19 mm)	90-100	#4 (4.8 mm)	60-100	3/4" (19 mm)	60-100
3/8" (10 mm)	20-55	#200 (75 μm)	0-5	#8 (2.4 mm)	35-80
#4 (4.8 mm)	0-10	MAX. P.I.=5		#200 (75 μm)	0-25
#8 (2.4 mm)	0-5	MAX. L.L.=30		P.I. + MINUS #200 (75 μm) < 25	
ALL SIEVE ANALYSES SHALL BE CERTIFIED AND SUBMITTED TO PCWMD PRIOR TO STARTING CONSTRUCTION.					

NOTES:

1. TRENCH BACKFILL SHALL CONFORM TO THE REQUIREMENTS OF SUBSECTION 508-2.07 OF THE PIMA COUNTY/CITY OF TUCSON STANDARD SPECIFICATIONS FOR PUBLIC IMPROVEMENTS. COMPACTION OF THE BACKFILL SHALL CONFORM TO THE REQUIREMENTS OF SUBSECTION 508-3.04(A) UNLESS OTHERWISE NOTED ON THE PLANS OR IN THE SPECIAL PROVISIONS.

2. SHADING SHALL BE CAREFULLY PLACED. MINIMUM DENSITY TO BE 95% OF THE DRY DENSITY DETERMINED IN ACCORDANCE WITH THE REQUIREMENTS OF THE APPLICABLE TEST METHODS OF THE ADOT MATERIALS TESTING MANUAL.

3. ALL DUCTILE IRON PIPE AND ALL PIPE 18" (450 mm) IN DIAMETER AND LARGER WILL REQUIRE SPECIAL APPROVAL OF THE DESIGN AND INSTALLATION BY PCWMD.

4. PCWMD RESERVES THE RIGHT TO ADJUST, ON AN INDIVIDUAL CASE BASIS, THE PIPE BEDDING REQUIREMENTS TO MEET UNEXPECTED FIELD/SOIL CONDITIONS.

5. UNDISTURBED EARTH OR SELECT MATERIAL SHALL BE COMPACTED TO 95% OF THE MAXIMUM DENSITY DETERMINED IN ACCORDANCE WITH THE REQUIREMENTS OF THE APPLICABLE TEST METHODS OF THE ADOT MATERIALS TESTING MANUAL

6. CRUSHED STONE BEDDING SHALL NOT BE USED WITH DUCTILE IRON PIPE UNLESS APPROVED IN WRITING BY PCWMD.

7. NATIVE MATERIAL MEETING THE GRADATION OF SELECT MATERIAL MAY BE USED IN LIEU OF SELECT MATERIAL.

ISSUED:		STANDARD DETAIL		DETAIL NO.
8/92	CITY OF TUCSON FOUNDED 1776	RIGID PIPE BEDDING FOR SANITARY SEWERS	THE SEAL of PIMA COUNTY ARIZONA	WWM 104
REVISED: 7/02				SHEET 2 OF 2

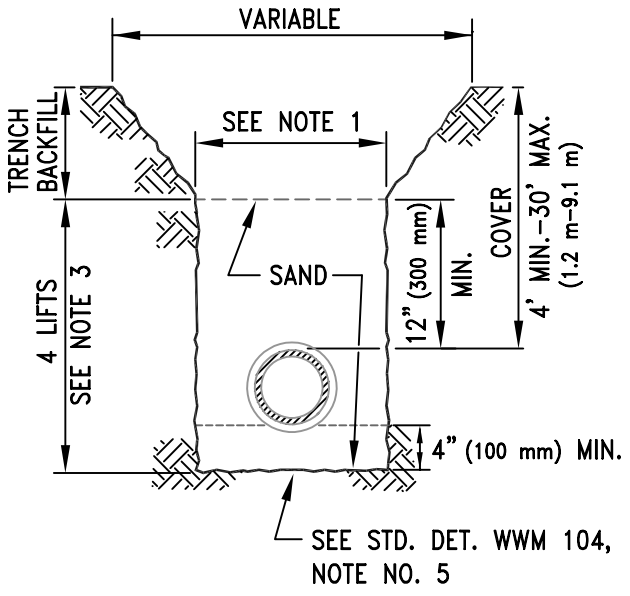

SAND BEDDING

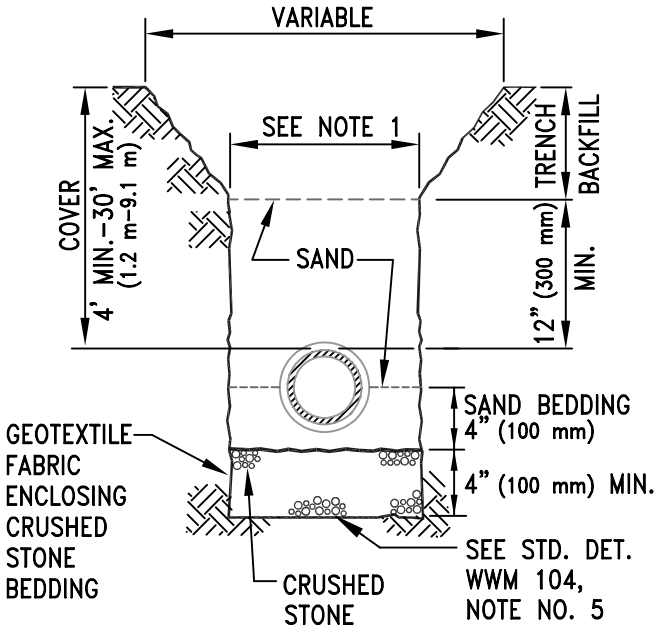

CRUSHED STONE BEDDING

NOTES:

1. NOTES 1 THRU 6 OF STANDARD DETAIL NO. WWM 104 (RIGID PIPE) ARE ALSO APPLICABLE TO FLEXIBLE PIPE INSTALLATIONS.

2. WHEN USING A MOVABLE TRENCH BOX, THE INSIDE WALLS OF THE BOX MUST CLEAR THE SEWER PIPE AS NOT TO DISTURB THE BEDDING WITHIN TWO PIPE DIAMETERS (O.D.) ON EACH SIDE OF THE PIPE.

3. FOR SAND BEDDING, PLACE SAND FROM BOTTOM OF TRENCH TO 12" (300 mm) OVER THE PIPE IN FOUR LIFTS, WITH EACH LIFT COMPACTED TO 95% OF THE MAXIMUM DENSITY DETERMINED IN ACCORDANCE WITH THE REQUIREMENTS OF THE APPLICABLE TEST METHODS OF THE ADOT MATERIALS TESTING MANUAL, USING HAND OR MECHANICAL TAMPING. WATER SETTLING OF FLEXIBLE PIPE WILL NOT BE PERMITTED. USE CARE SO AS NOT TO MOVE PIPE OFF LINE OR GRADE.

4. REFER TO SIEVE ANALYSIS CHART ON STANDARD DETAIL NO. WWM 104 FOR CRUSHED STONE, SAND AND SELECT NATIVE MATERIALS.

5. IF CRUSHED STONE IS USED FOR THE BEDDING MATERIAL, SAND SHALL BE USED FOR THE SHADING MATERIAL.

ISSUED:		STANDARD DETAIL		DETAIL NO.
8/92	CITY OF TUCSON FOUNDED 1776	FLEXIBLE PIPE BEDDING FOR SANITARY SEWERS	THE SEAL of PIMA COUNTY ARIZONA	WWM 105
REVISED: 7/02				SHEET 1 OF 1

1. ALL DESIGN STANDARDS, MATERIALS AND WORKMANSHIP FOR PUBLIC SANITARY SEWERS ARE TO BE IN ACCORDANCE WITH THE LATEST EDITION OF THE PIMA COUNTY WASTEWATER MANAGEMENT DEPARTMENT'S (PCWMD) MANUAL OF ENGINEERING STANDARDS AND PROCEDURES, AND THE PIMA COUNTY / CITY OF TUCSON STANDARD DETAILS AND SPECIFICATIONS FOR PUBLIC IMPROVEMENTS, SAID MANUALS ARE ON FILE AT PIMA COUNTY WASTEWATER MANAGEMENT OFFICES AT 201 N. STONE AVENUE, 8TH FLOOR.

2. THE CONTRACTOR SHALL COMPLY WITH ALL APPLICABLE OCCUPATIONAL SAFETY AND HEALTH ADMINISTRATION REGULATIONS.

3. THE CONTRACTOR SHALL VERIFY LOCATIONS AND ELEVATIONS OF ALL EXISTING UTILITIES PRIOR TO ANY CONSTRUCTION. CALL "BLUE STAKE" 1-800-782-5348, A MINIMUM OF TWO (2) FULL WORKING DAYS PRIOR TO EXCAVATING.

4. ALL CHANGES THAT MIGHT AFFECT THE SEWERAGE SYSTEM (BOTH CONVEYANCE AS WELL AS TREATMENT) SHALL BE APPROVED BY THE PIMA COUNTY WASTEWATER MANAGEMENT DEPARTMENT PRIOR TO THEIR CONSTRUCTION.

5. THE CONTRACTOR SHALL FIELD VERIFY EXISTING SEWER ELEVATIONS AND ALIGNMENTS PRIOR TO CONSTRUCTION AND IMPLEMENTATION. VERIFICATION MAY REQUIRE POT-HOLING.

6. ALL ROUGH GRADING SHALL BE COMPLETE PRIOR TO THE INSTALLATION OF SEWERS, INCLUDING FILL, TO A MINIMUM OF 4 FEET (1.2 m) OVER THE TOP OF SEWER PIPE, AND COMPACTION AS INDICATED ON THE PLANS OR AS OTHERWISE DIRECTED BY PCWMD.

7. WHERE CONNECTIONS TO EXISTING MANHOLES ARE TO BE MADE, THE CONTRACTOR SHALL CONSTRUCT NEW INVERTS IN THE EXISTING BENCH TO SMOOTHLY DIRECT THE FLOW IN THE PROPER DIRECTION.

8. THE CONTRACTOR SHALL FURNISH, OPERATE AND MAINTAIN ALL EQUIPMENT NECESSARY TO PROVIDE CONTINUOUS 24 HR./DAY SEWER SERVICE TO ALL PARTIES TRIBUTARY TO A LIVE SEWER TO WHICH A CONNECTION IS TO BE MADE. NOTIFY THE PIMA COUNTY WASTEWATER MANAGEMENT DEPARTMENT'S COLLECTION SYSTEM MAINTENANCE SECTION AT (326-4333) 48 HOURS PRIOR TO STARTING ANY CONSTRUCTION THAT COULD EITHER ADVERSELY IMPACT THE FLOW WITHIN A LIVE SEWER, OR INVOLVE CONNECTION TO A SEWER FIFTEEN (15) INCHES (375 mm) IN DIAMETER OR LARGER.

9. SEWER CONSTRUCTION SHALL START AT THE LOWEST DOWNSTREAM POINT AND PROGRESS UPSTREAM, REGARDLESS OF THE STATIONING SHOWN ON THE PLANS.

10. THE CONTRACTOR SHALL MAKE FULL PAYMENT OF THE INVOLVED INSPECTION FEES AND OBTAIN A WASTEWATER MANAGEMENT SEWER CONSTRUCTION PERMIT FROM THE PIMA COUNTY DEVELOPMENT SERVICES DEPARTMENT (PLANNING, 740-6586) A MINIMUM OF THREE FULL WORKING DAYS PRIOR TO STARTING ANY SEWER CONSTRUCTION. THREE COPIES OF THE CONSTRUCTION PLANS AND SPECIFICATIONS ARE REQUIRED TO BE SUBMITTED WITH THE SEWER CONSTRUCTION PERMIT APPLICATION.

11. DUCTILE IRON PIPE 6" (150 mm) AND GREATER IN DIAMETER, FITTINGS AND METAL COUPLINGS SHALL HAVE BOTH POLYETHYLENE OR HYBRID NOVOLAC EPOXY INTERIOR LINING AND A POLYETHYLENE EXTERIOR WRAPPING OR APPROVED EQUALS. PIPES MADE FROM UNLIKE MATERIALS SHALL BE COUPLED TOGETHER IN ACCORDANCE WITH STANDARD DETAIL WWM 103.

12. THE HORIZONTAL DISTANCE BETWEEN A PUBLIC WATER PIPE AND A SEWER MAIN SHALL NOT BE LESS THAN SIX (6) FEET (1.8 m). VERTICAL CLEARANCE BETWEEN WATER AND SEWER LINES SHALL BE A MINIMUM OF 24 INCHES (610 mm). (IF THESE CRITERIA CANNOT BE MET, DESIGN CHANGES SHALL BE REQUIRED.) REFER TO STANDARD DETAIL WWM 108.

13. IT IS THE CONTRACTOR'S RESPONSIBILITY TO ADJUST ALL SANITARY SEWER MANHOLE STRUCTURES TO FINISHED GRADE. ALL RING AND COVER ADJUSTMENTS ARE TO BE IN ACCORDANCE WITH PIMA COUNTY/CITY OF TUCSON STANDARD DETAILS FOR PUBLIC IMPROVEMENTS WWM 304, WWM 305 OR WWM 306 (AS APPLICABLE) AND WWM 307. WHILE ADJUSTING THE MANHOLE TO FINISHED GRADE, IT IS THE CONTRACTOR'S RESPONSIBILITY TO ENSURE THAT RINGS AND COVERS ARE CLEANED OF ANY AND ALL ATTACHED MATERIALS (ASPHALT, CONCRETE, ETC.) AND ENSURE THAT ANY VENT HOLES ARE OPEN AND CLEAR OF OBSTRUCTIONS. IF THE FRAME AND COVER ARE DAMAGED AND CANNOT BE COMPLETELY CLEANED, THEN A NEW FRAME AND COVER IS TO BE PUT INTO PLACE, AND COSTS ASSOCIATED WITH THESE ACTIONS ARE THE RESPONSIBILITY OF THE CONTRACTOR. REFER TO DETAILS WWM 213.0–214.3 FOR REQUIREMENTS FOR RINGS AND COVERS.

14. IMMEDIATELY REPORT ANY RELEASE OF SEWAGE, AND/OR ANY DAMAGE TO, OR THE DROPPING OF DEBRIS INTO, THE PUBLIC SANITARY SEWAGE CONVEYANCE SYSTEM TO EITHER PCWMD FIELD ENGINEERING (740–2651) OR PCWMD FIELD OPERATIONS (326–4333). ON WEEKENDS, HOLIDAYS, OR BETWEEN 5:00 PM AND 8:00 AM, IMMEDIATELY CALL PIMA COUNTY SHERIFF'S COMMUNICATION CENTER AT 295–685 OR CALL 791–4011 AND REQUEST A PCWMD REPRESENTATIVE TO BE DISPATCHED TO THE SITE. TAKE IMMEDIATE ACTION TO PREVENT OR CONTAIN THE SANITARY SEWAGE OVERFLOW (SSO) FROM THE SEWER SYSTEM. THE CONTRACTOR SHALL BE RESPONSIBLE FOR ALL COSTS TO REPAIR THE SYSTEM, FOR ALL EXPENSES TO MITIGATE THE RELEASE AND TO DISINFECT THE RELEASE AREAS, AND FOR ANY REGULATORY PENALTIES LEVIED ON PCWMD BECAUSE THE SSO ENTERED A NATURAL OR CONSTRUCTED STORM WATER DRAINAGE SYSTEM. THE CONTRACTOR SHALL REPAIR ALL DAMAGE AS DIRECTED AND APPROVED BY PCWMD.

15. REFER TO DETAIL WWM A–5 FOR FLOW MANAGEMENT PLAN REQUIREMENTS.

16. REFER TO STANDARD SPECIFICATION SUBSECTION 508–3.05 (E) FOR ALIGNMENT VERIFICATION REQUIREMENTS INCLUDING THE SPACING REQUIREMENTS FOR GRADE STAKES.

17. THE CHECKING OF THE CONTRACTOR'S WORK BY AGENCY AND/OR PCWMD STAFF SHALL IN NO WAY RELIEVE THE CONTRACTOR OF RESPONSIBILITY FOR CONFORMANCE WITH THE PLANS AND SPECIFICATIONS. IF THE ENGINEER OR PCWMD INSPECTOR FAIL TO POINT OUT A DEFECT, DEFICIENCY OR ERROR IN THE WORK FROM LACK OF DISCOVERY OR FOR ANY REASON, IT SHALL IN NO WAY PREVENT LATER REJECTION OR CORRECTIONS TO THE UNSATISFACTORY WORK WHEN DISCOVERED. THE CONTRACTOR SHALL HAVE NO CLAIM FOR LOSSES SUFFERED DUE TO ANY NECESSARY REMOVALS OR REPAIRS RESULTING FROM THE UNSATISFACTORY WORK.

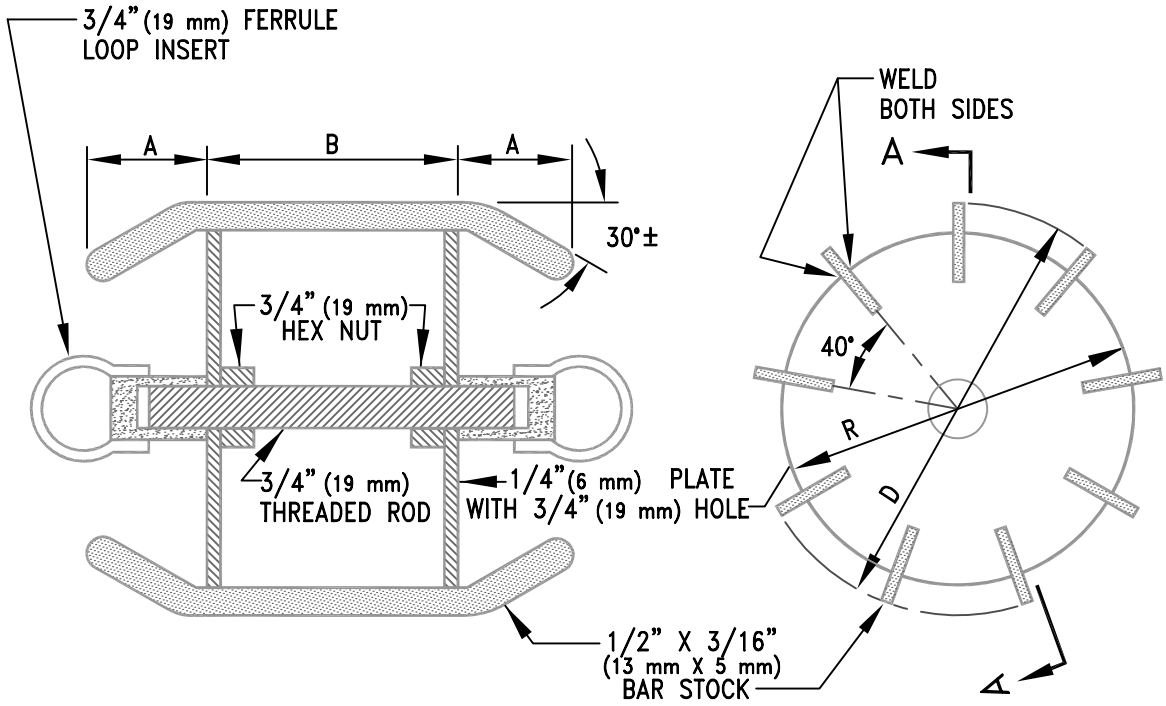

SECTION A–A

END VIEW

5% DEFLECTION				
PIPE SIZE	A	B	D	R
8" (200 mm)	2" (50 mm)	2.4"–8" (62 mm–200 mm)	7.28" (184 .2 mm)	6.28" (159.5 mm)
10" (250 mm)	2" (50 mm)	3"–10" (75 mm–250 mm)	9.08" (230.6 mm)	8.08" (205.2 mm)
12" (300 mm)	2" (50 mm)	3.5"–12" (89 mm–300 mm)	10.79" (274.07 mm)	9.79" (248.7 mm)
15" (375 mm)	2" (50 mm)	4.3"–15" (110 mm–300 mm)	13.20" (335.3 mm)	12.20" (309.9 mm)
18" (460 mm) AND OVER	SUBMIT SHOP DRAWING			

NOTES:

1. AFTER WELDING IS COMPLETED, TRUE THE OUTSIDE DIAMETER DIMENSION FOR THE FULL LENGTH OF "B" TO ±0.010"(0.3 mm) BY TOOL AND LATHE OR GRINDING.
2. FINISHED PART TO BE SANDBLASTED AND RUST–PROOFED WITH PAINT.
3. THE MINIMUM NUMBER OF RIBS IS SUBJECT TO PCWMD REVIEW AND APPROVAL OF SHOP DRAWINGS.

ISSUED:		STANDARD DETAIL		DETAIL NO.
8/92	CITY OF TUCSON FOUNDED 1776	DEFLECTION TESTING MANDREL	THE SEAL of PIMA COUNTY ARIZONA	WWM 107
REVISED: 7/02				SHEET 1 OF 1

VERTICAL SEPARATION

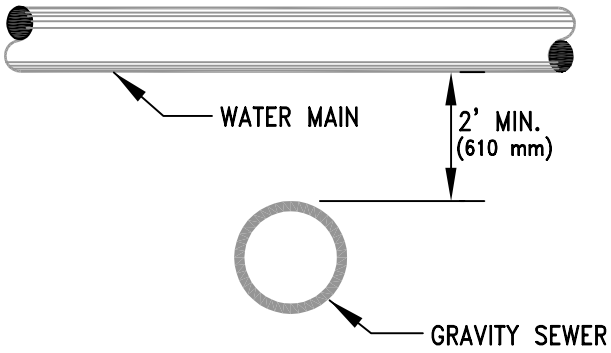

GRAVITY SEWER CROSSING

(SEWER UNDER WATER MAIN)

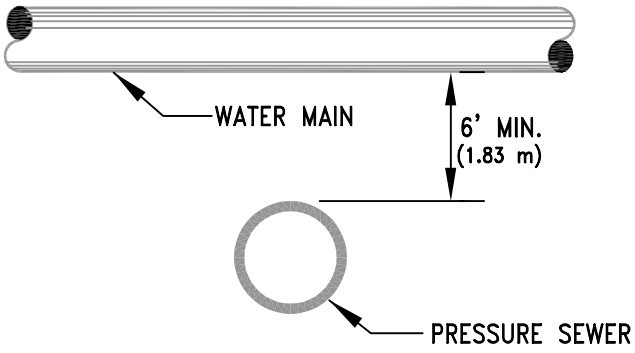

PRESSURE SEWER CROSSING

(SEWER UNDER WATER MAIN)

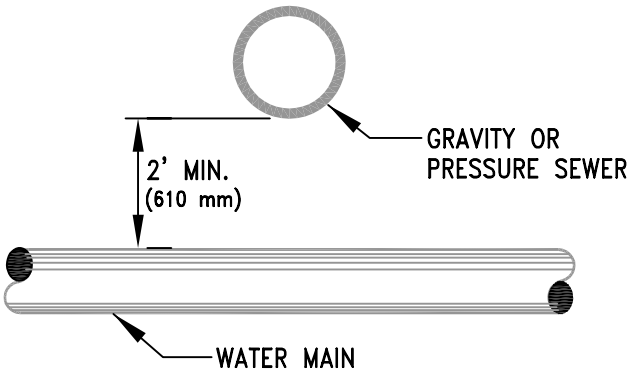

GRAVITY OR PRESSURE SEWER CROSSING

(SEWER ABOVE WATER MAIN)

NOTES:

1. WHERE A WATER MAIN CROSSES ABOVE A GRAVITY SEWER WITH 2' (610 mm) OR GREATER VERTICAL CLEARANCE (OUTSIDE SURFACE TO OUTSIDE SURFACE), NO EXTRA PROTECTION IS REQUIRED. WHERE A WATER MAIN CROSSES ABOVE A PRESSURE SEWER WITH 6' (1.8 m) OR GREATER VERTICAL CLEARANCE, NO EXTRA PROTECTION IS REQUIRED.

2. WHERE A WATER MAIN MUST CROSS ABOVE A GRAVITY SEWER WITH LESS THAN 2' (610 mm) OF CLEARANCE OR ABOVE A PRESSURE SEWER WITH LESS THAN 6' (1.83 m) OF CLEARANCE, CONSTRUCT OR REPLACE THE SEWER LINE WITH DUCTILE IRON PIPE (D.I.P.) OR APPROVED EQUAL. THE D.I.P. SHALL HAVE A "PUSH-ON" JOINT OR APPROVED EQUAL IF THE SEWER JOINTS ARE LOCATED 6' (1.8 m) OR MORE BEYOND THE OUTSIDE SURFACE OF THE WATER MAIN. IF THE JOINT IS LOCATED LESS THAN 6' (1.8 m) FROM THE OUTSIDE SURFACE OF THE WATER MAIN, THEN A RESTRAINED JOINT OR APPROVED EQUAL SHALL BE USED. REFER TO SHEET 3 OF 3. IN NO CASE SHALL THE WATER MAIN BE LESS THAN 1' (305 mm) ABOVE A GRAVITY SEWER OR 2' (610 mm) ABOVE A PRESSURE SEWER.

3. WHERE A WATER MAIN CROSSES BELOW EITHER A GRAVITY SEWER OR A PRESSURE SEWER, CONSTRUCT OR REPLACE THE SEWER LINE WITH D.I.P. OR APPROVED EQUAL FOLLOWING THE GUIDELINES GIVEN IN NOTE NO. 2. IN NO CASE SHALL THE WATER MAIN BE LESS THAN 2 FEET (610 mm) BELOW EITHER A GRAVITY OR PRESSURE SEWER LINE.

ISSUED:		STANDARD DETAIL		DETAIL NO.
11/94	CITY OF TUCSON FOUNDED 1776	SEWER / WATER CROSSING DETAILS	THE SEAL of PIMA COUNTY ARIZONA	WWM 108
REVISED: 7/02				SHEET 1 OF 3

HORIZONTAL SEPARATION

SEWER / WATER SEPARATION

(PARALLEL ALIGNMENTS)

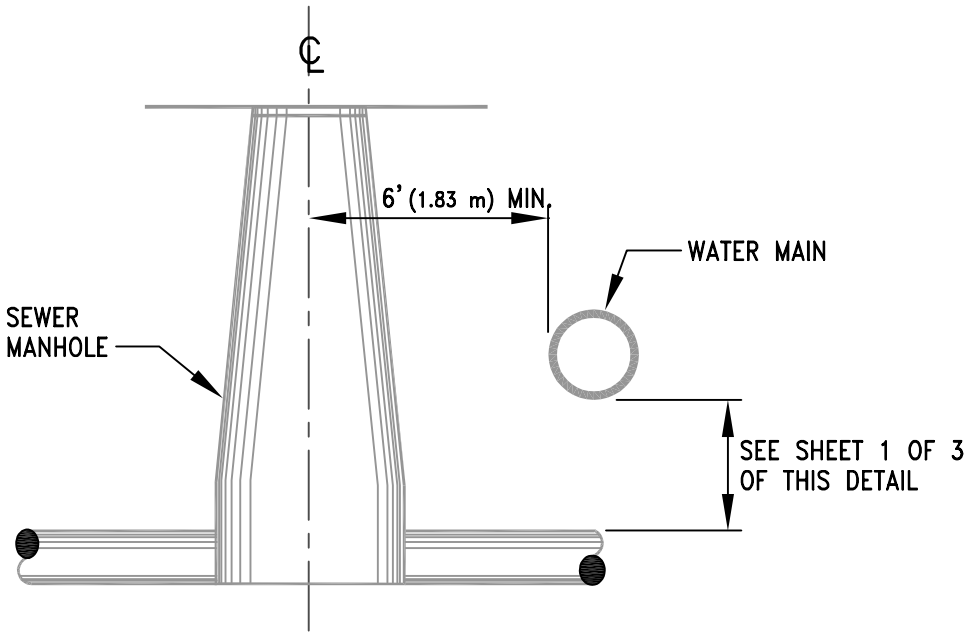

NOTES (CONTINUED):

4. THE MINIMUM HORIZONTAL CLEARANCE WITHOUT EXTRA PROTECTION BETWEEN A WATER MAIN AND A PRESSURE OR GRAVITY SEWER LINE SHALL BE 6' (1.83 m) OUTSIDE SURFACE TO OUTSIDE SURFACE.

5. THE MINIMUM HORIZONTAL CLEARANCE BETWEEN A WATER MAIN AND A SEWER MANHOLE SHALL BE 6' (1.83 m) FROM THE OUTSIDE SURFACE OF THE WATER MAIN TO THE CENTERLINE OF THE MANHOLE.

6. WHERE A 6' (1.83 m) HORIZONTAL CLEARANCE CANNOT BE MAINTAINED WITH A GRAVITY SEWER, CONSTRUCT OR REPLACE THE SEWER LINE WITH D.I.P. OR APPROVED EQUAL FOLLOWING THE GUIDELINES GIVEN IN NOTE NO. 2. IN NO CASE SHALL A GRAVITY SEWER LINE BE LOCATED LESS THAN 2' (610 mm) HORIZONTALLY FROM A WATER MAIN.

7. IN NO CASE SHALL A PRESSURE SEWER LINE BE LOCATED LESS THAN 6' (1.83 m) HORIZONTALLY FROM A WATER MAIN.

8. THE AMERICAN NATIONAL STANDARD FOR THE THICKNESS DESIGN OF DUCTILE IRON PIPE (ANSI/AWWA C150/A21.50) SHALL BE USED TO DETERMINE THE REQUIRED CLASS OF D.I.P. EXCEPT THAT FOR D.I.P. WITH A DIAMETER OF 3" (75 mm) THRU 24" (600 mm), A MINIMUM OF CLASS 350 (2.4 MPa) IS REQUIRED AND FOR D.I.P. WITH A DIAMETER GREATER THAN 24" (600 mm), A MINIMUM OF CLASS 200 (1.4 MPa) IS REQUIRED.

PLAN VIEWS

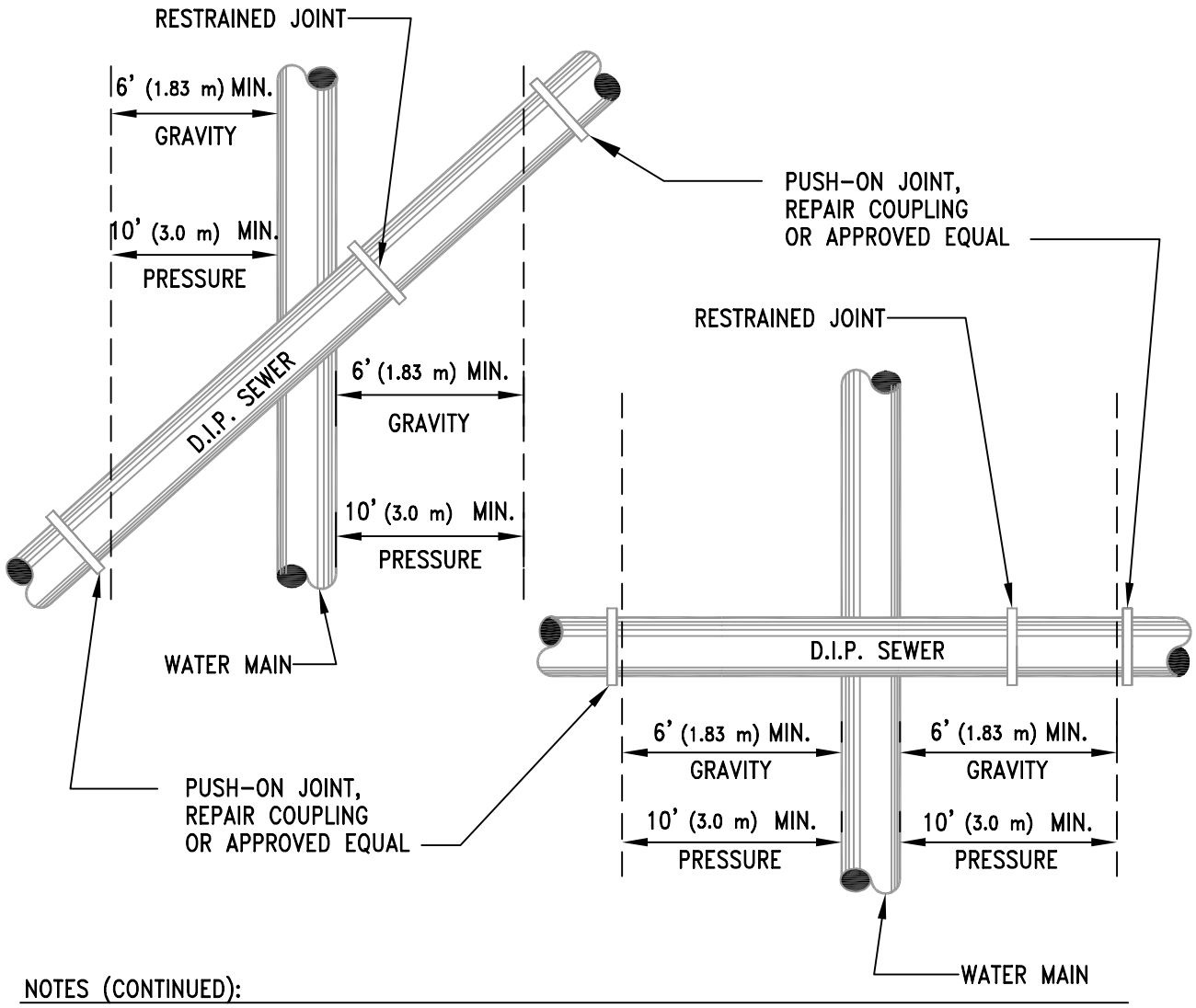

NOTES (CONTINUED):

9. WHERE THE SEWER LINE IS A GRAVITY SEWER, THE D.I.P. INSTALLATION OR REPLACEMENT SHALL EXTEND A MINIMUM OF 6' (1.83 m) BEYOND EACH SIDE OF THE WATER MAIN, MEASURED HORIZONTALLY FROM AND PERPENDICULAR TO THE WATER MAIN.

10. WHERE THE SEWER LINE IS A PRESSURE SEWER, THE D.I.P. INSTALLATION OR REPLACEMENT SHALL EXTEND A MINIMUM OF 10' (3.0 m) BEYOND EACH SIDE OF THE WATER MAIN, MEASURED HORIZONTALLY FROM AND PERPENDICULAR TO THE WATER MAIN.

11. WHEN UNUSUAL CONDITIONS SUCH AS, BUT NOT LIMITED TO, HIGHWAY OR BRIDGE CROSSINGS PREVENT THE WATER AND SEWER LINE SEPARATIONS REQUIRED BY THIS DETAIL FROM BEING MET, THE PIMA COUNTY WASTEWATER MANAGEMENT DEPARTMENT WILL REVIEW AND MAY APPROVE (SUBJECT TO ARIZONA DEPARTMENT OF ENVIRONMENTAL QUALITY APPROVAL), REQUESTS FOR AUTHORIZATION TO USE ALTERNATE CONSTRUCTION TECHNIQUES, MATERIALS AND JOINTS ON A CASE-BY-CASE BASIS.

12. ALL DUCTILE IRON PIPE SHALL BE INTERNALLY LINED TO MEET THE MOST RECENT PIMA COUNTY WASTEWATER DEPARTMENT SPECIFICATIONS.

ISSUED:		STANDARD DETAIL		DETAIL NO.
8/92		SEWER / WATER CROSSING DETAILS		WWM 108
REVISED:				
7/02				SHEET 3 OF 3

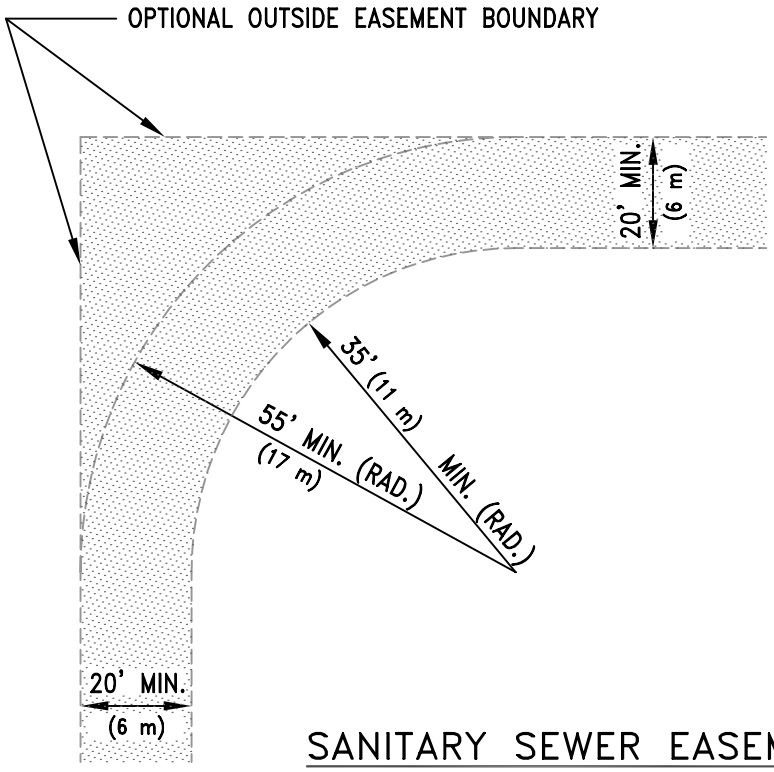

SANITARY SEWER EASEMENT

NOT TO SCALE

LEGEND:

PORTION OF ACCESS EASEMENT WHICH MUST BE LEFT FREE OF SIGNIFICANT VEGETATION OR ANY STRUCTURES

NOTES:

1. MINIMUM VERTICAL CLEARANCE = 20 FEET (6 m).
2. MINIMUM HORIZONTAL CLEARANCE = 20 FEET (6 m).
3. MINIMUM OUTSIDE TURNING RADIUS = 55 FEET (17 m).
4. MINIMUM INSIDE TURNING RADIUS = 35 FEET (11 m).
5. MINIMUM RELATIVELY LEVEL SURFACE AT MANHOLE = 5 FOOT (1.5 m) RADIUS.
6. MAXIMUM DRIVING AREA GRADE = 17 PERCENT.
7. MINIMUM EASEMENT WIDTH = THE SUM OF THE OUTSIDE DIAMETER OF THE PIPE PLUS THE GREATER OF EITHER 20 FEET (6 m) OR TWICE THE DEPTH OF THE SEWER LINE, ROUNDED TO THE NEAREST 5 FEET (1 m).

ISSUED:		STANDARD DETAIL		DETAIL NO.
8/92	CITY OF TUCSON FOUNDED 1776	SANITARY SEWER EASEMENT	THE SEAL of PIMA COUNTY ARIZONA	WWM 109
REVISED: 7/02				SHEET 1 OF 1

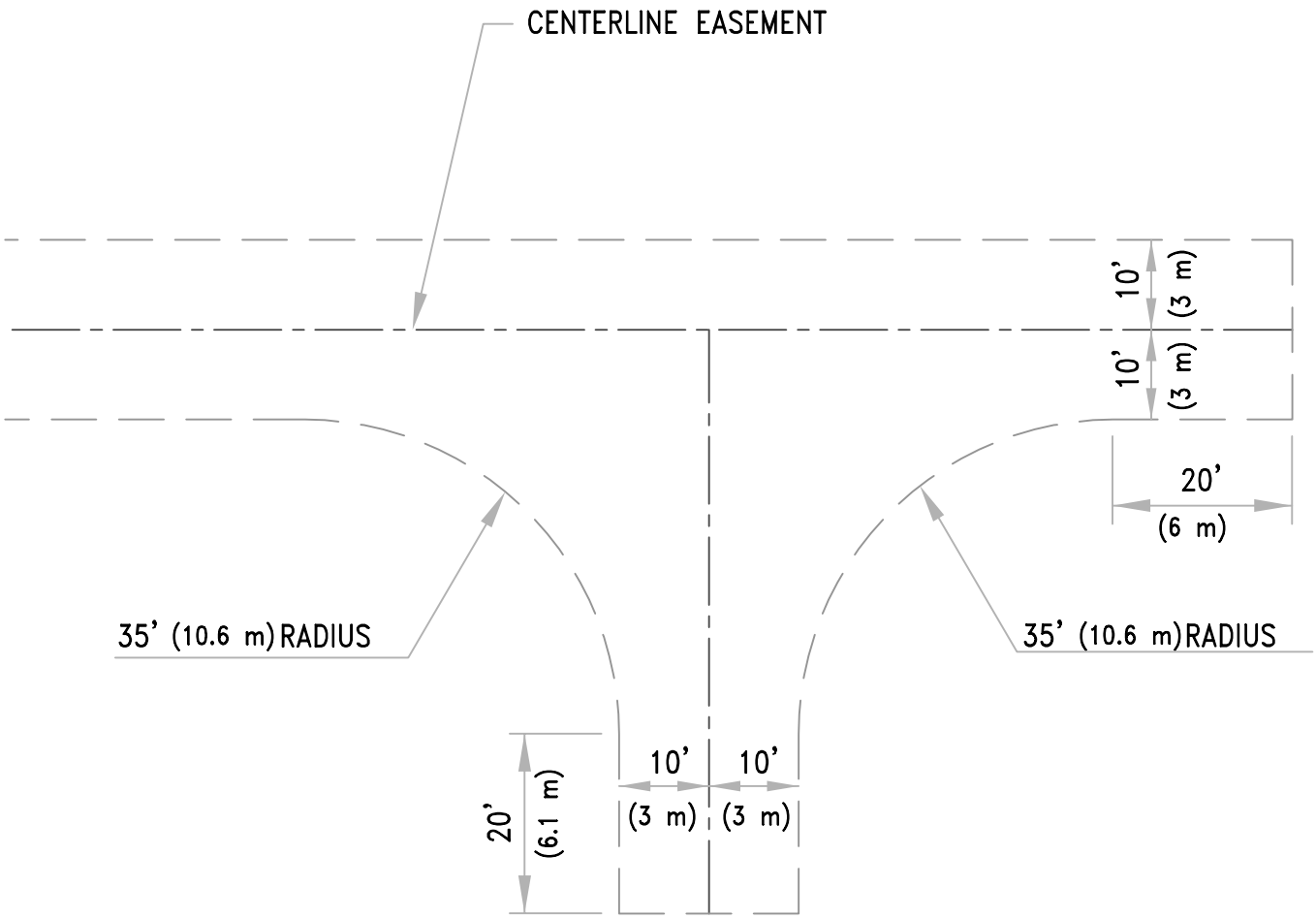

ISSUED:		STANDARD DETAIL		DETAIL NO.
1/02		RIGHT ANGLE TURN AROUND		WWM 110
REVISED:				
7/02				SHEET 1 OF 1

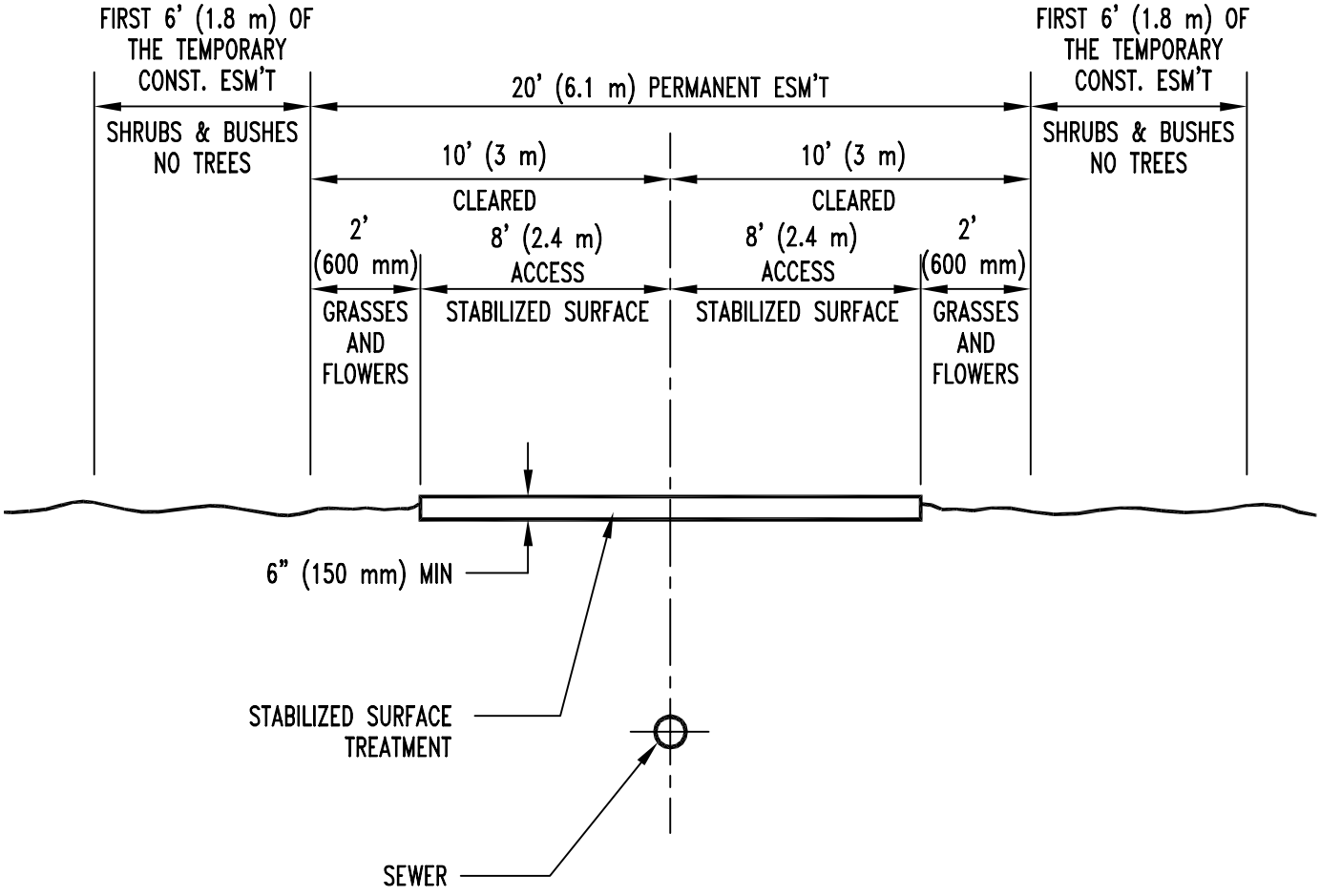

ISSUED:		STANDARD DETAIL		DETAIL NO.
7/02		TYPICAL SEWER EASEMEMT SECTION		WWM 111
REVISED:				
9/02				SHEET 1 OF 2

NOTES:

1. PUBLIC SEWER EASEMENTS SHALL BE A MINIMUM 20 FEET (6.1 m) IN WIDTH. PUBLIC SEWER EASEMENTS SHALL BE PROVIDED WITH A MINIMUM 16 FOOT (4.8 m) WIDE STABILIZED SURFACE. THE STABILIZED SURFACE SHALL BE CENTERED OVER THE SEWER.

2. BASED ON THE COMPOSITION OF THE SITE SOILS, THE STABILIZED SURFACE TRAETMENT SHALL BE SELECTED FROM ONE OF THE FOLLOWING OPTIONS:
   A. HYDRATED LIME SLURRY
   B. HYDRATED LIME SLURRY AND FLY ASH
   C. PORTLAND CEMENT

   THE CONTRACTOR SHALL PROVIDE A MIX DESIGN INDICATING THE MIX PROPORTIONS FOR THE STABILIZED SURFACE TREATMENT MATERIAL(S) FOR APPROVAL BY THE ENGINEER. SOIL INCORPORATED INTO THE 6" (150 mm) THICK STABILIZED SURFACE SHALL NOT CONTAIN MATERIAL RETAINED ON A 3" (75 mm) SIEVE NOR CONTAIN ANY DELETERIOUS MATERIAL. A CLEAR CURING COMPOUND, APPROVED BY THE ENGINEER, SHALL BE APPLIED TO THE SURFACE OF THE STABILIZED AREA AFTER IT HAS BEEN COMPACTED TO A DENSITY OF NOT LESS THAN 95% OF THE MAXIMUM DENSITY AS DETERMINED IN ACCORDANCE WITH THE APPLICABLE TEST METHODS OF THE ADOT MATERIALS TESTING MANUAL OR AS DIRECTED AND APPROVED BY THE ENGINEER.

3. THE AREA EXTENDING 2 FEET (600 mm) ON EITHER SIDE OF THE STABILIZING SURFACE MAY BE REVEGETATED WITH NATIVE GRASSES AND FLOWERS.

4. TEMPORARY CONSTRUCTION EASEMENTS EXTENDING BEYOND THE WIDTH OF THE PERMANENT SEWER EASEMENT SHALL BE REVEGETATED AS SPECIFIED ON THE PLANS. HOWEVER, THE REVEGETATION OF THE TEMPORARY EASEMENT SHALL BE RESTRICTED TO NATIVE SHRUBS, GRASSES, BUSHES AND/OR FLOWERS FOR THE FIRST 6 FEET (1.8 m) OF THE TEMPORARY CONSTRUCTION EASEMENT WIDTH. ALL SHRUBS, BUSHES AND UNDERSTORY PLANTS SHALL BE COMPATIBLE WITH THE SURROUNDING NATIVE VEGETATION. IF TREES ARE TO BE PLANTED IN AREAS BEYOND THE INITIAL 6 FEET (1.8 m) OF THE CONSTRUCTION EASEMENT, THE TREE TYPE SHALL BE APPROVED, IN WRITING, BY THE ENGINEER PRIOR TO DELIVERY TO THE SITE.

5. IF THE SEWER EASEMENT IS LOCATED WITHIN A ENVIRONMENTALLY SENSITIVE AREA, THE SPECIAL PROVISIONS AND DETAILS THAT ADDRESS CONSTRUCTION IN THE ENVIRONMENTALLY SENSITIVE AREA SHALL SUPERCEDE THIS DETAIL.

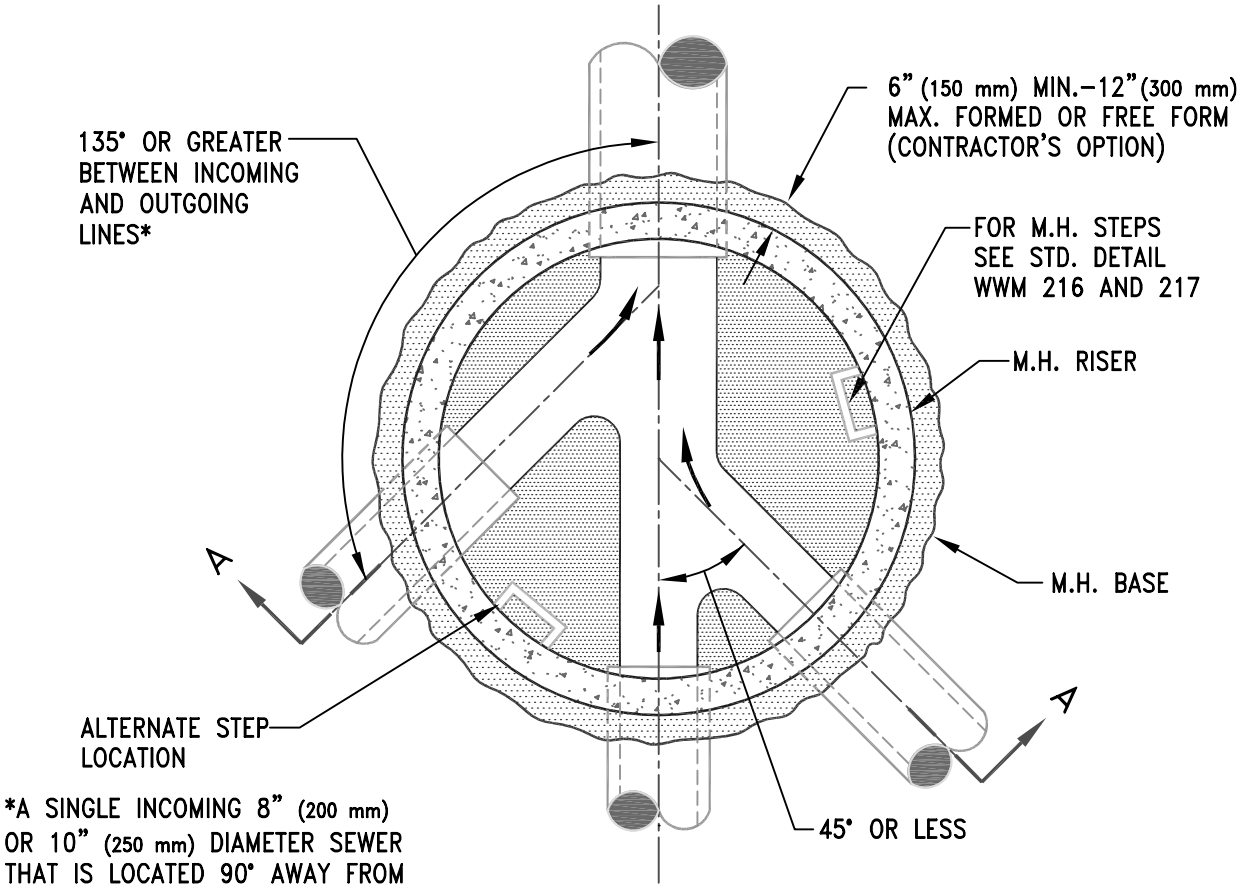

*A SINGLE INCOMING 8" (200 mm) OR 10" (250 mm) DIAMETER SEWER THAT IS LOCATED 90° AWAY FROM ANOTHER SINGLE INCOMING 8" (200 mm) DIAMETER OR LARGER SEWER IS ACCEPTABLE.

PLAN VIEW

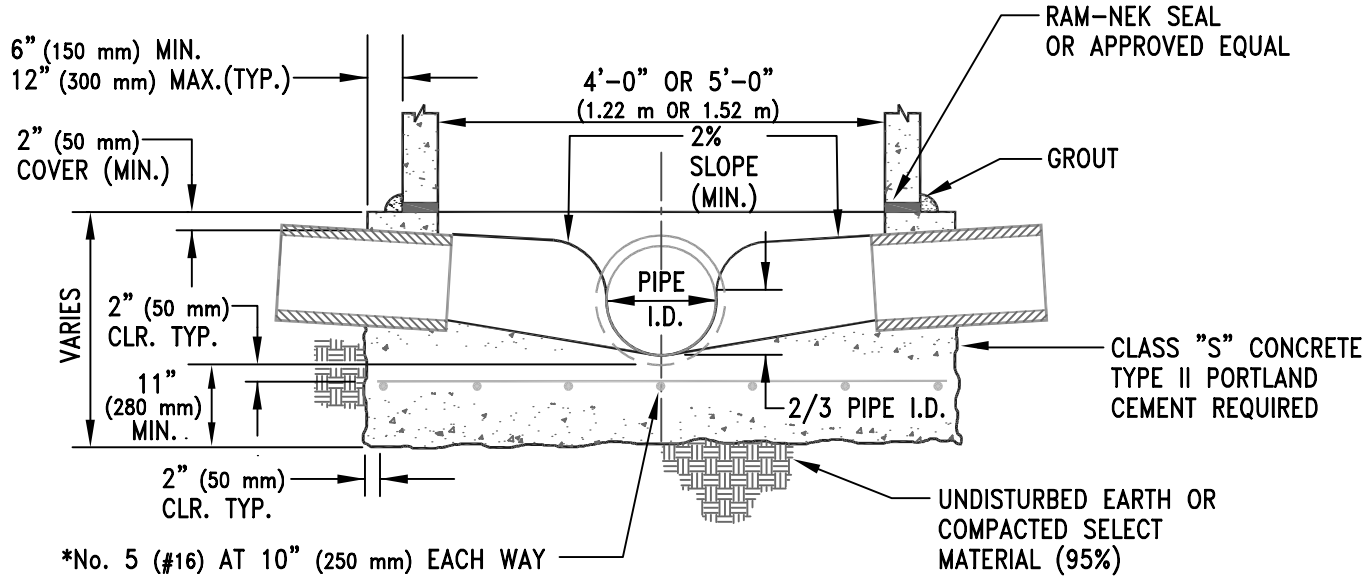

SECTION A–A

* NOTE:
REINFORCING STEEL IS OPTIONAL FOR MANHOLES LESS THAN 20' (6.1 m) DEEP FROM INVERT TO TOP OF COVER.

ISSUED:		STANDARD DETAIL		DETAIL NO.
8/92	CITY OF TUCSON	MANHOLE BASE 21"(525 mm) DIA. AND SMALLER	THE SEAL OF PIMA COUNTY ARIZONA	WWM 201
REVISED: 7/02				SHEET 1 OF 1

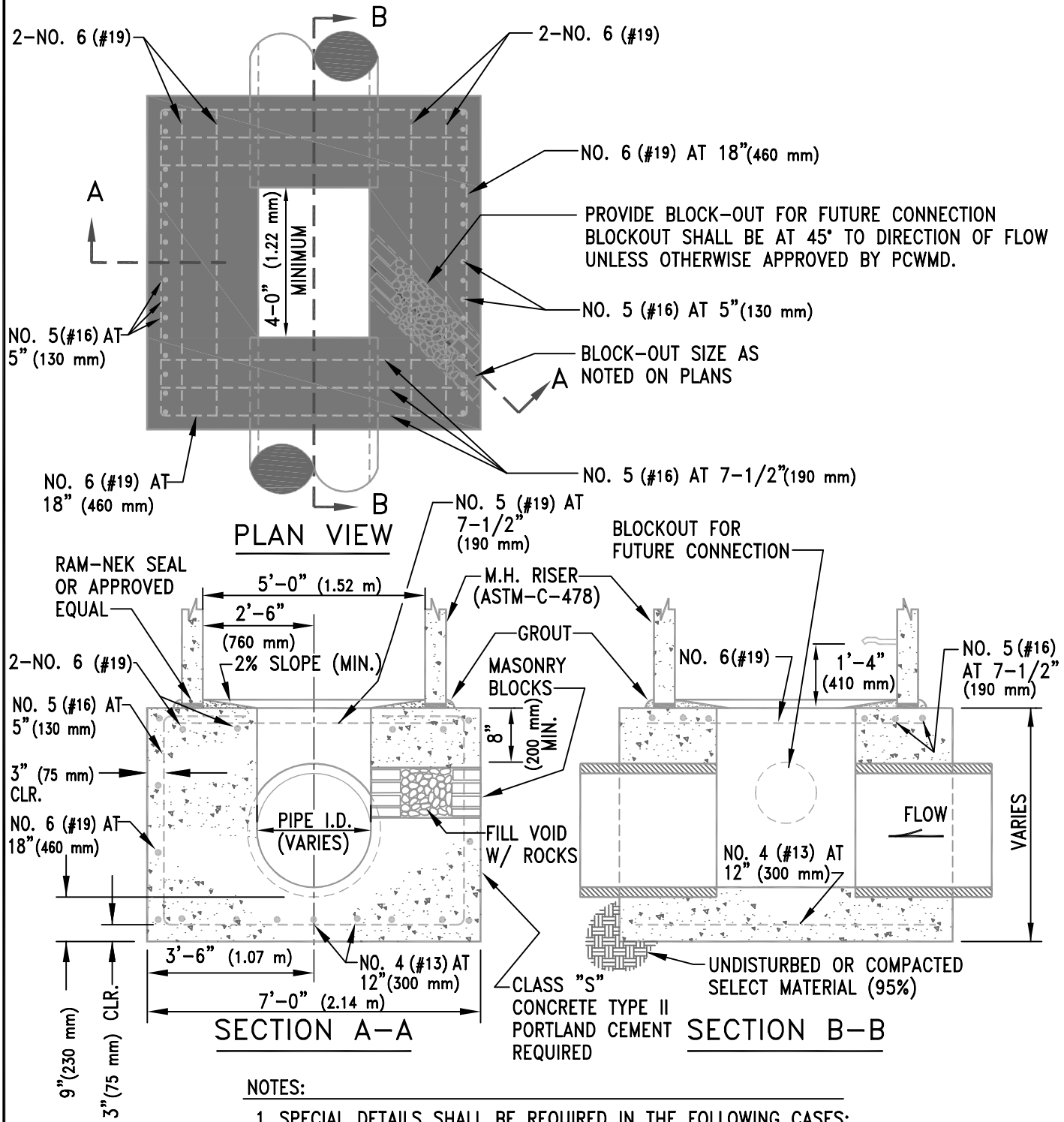

NOTES:

1. SPECIAL DETAILS SHALL BE REQUIRED IN THE FOLLOWING CASES:
   A. IF P.V.C.-LINED PIPE IS USED.
   B. AT DEFLECTION MANHOLES.
   C. IF THE SEWER MAIN IS LARGER THAN 48" (1200 mm) DIAMETER.

2. SPECIAL DETAILS REQUIRE APPROVAL BY PCWMD.

ISSUED:		STANDARD DETAIL		DETAIL NO.
8/92	CITY OF TUCSON FOUNDED 1776	MANHOLE BASE 24" (600 mm) to 48" (1200 mm) DIAMETER	THE SEAL of PIMA COUNTY ARIZONA	WWM 202
REVISED: 7/02				SHEET 1 OF 1

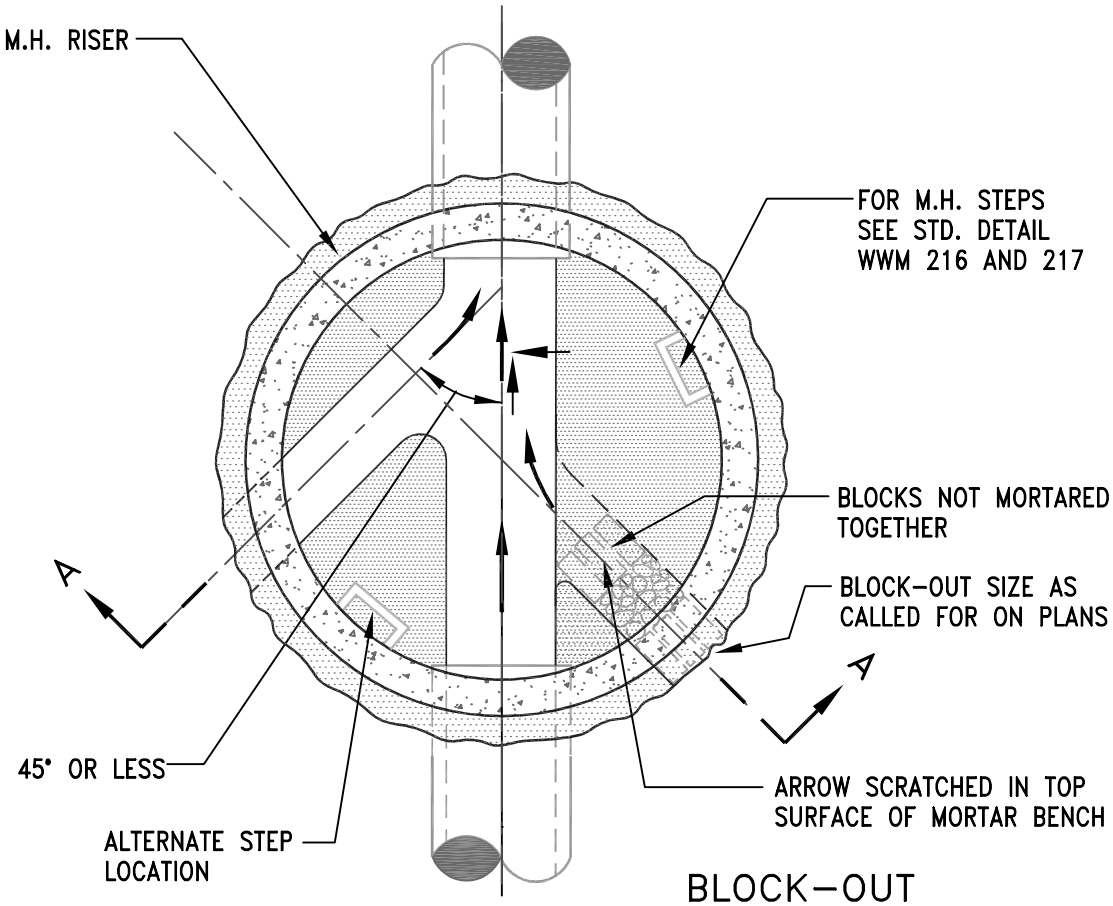

BLOCK-OUT

PLAN VIEW

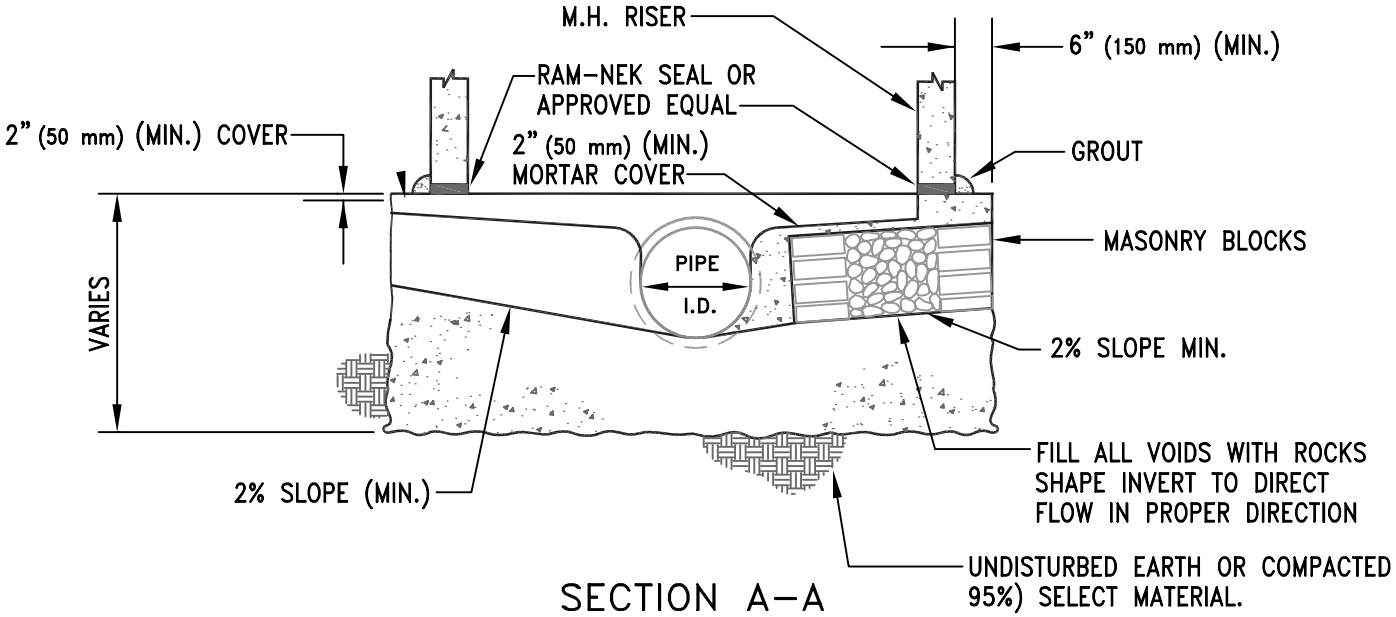

SECTION A-A

ISSUED:		STANDARD DETAIL		DETAIL NO.
8/92	CITY OF TUCSON FOUNDED 1776	MANHOLE STUB-OUT AND BLOCK-OUT	THE SEAL of PIMA COUNTY ARIZONA	WWM 203
REVISED: 7/02				SHEET 1 OF 1

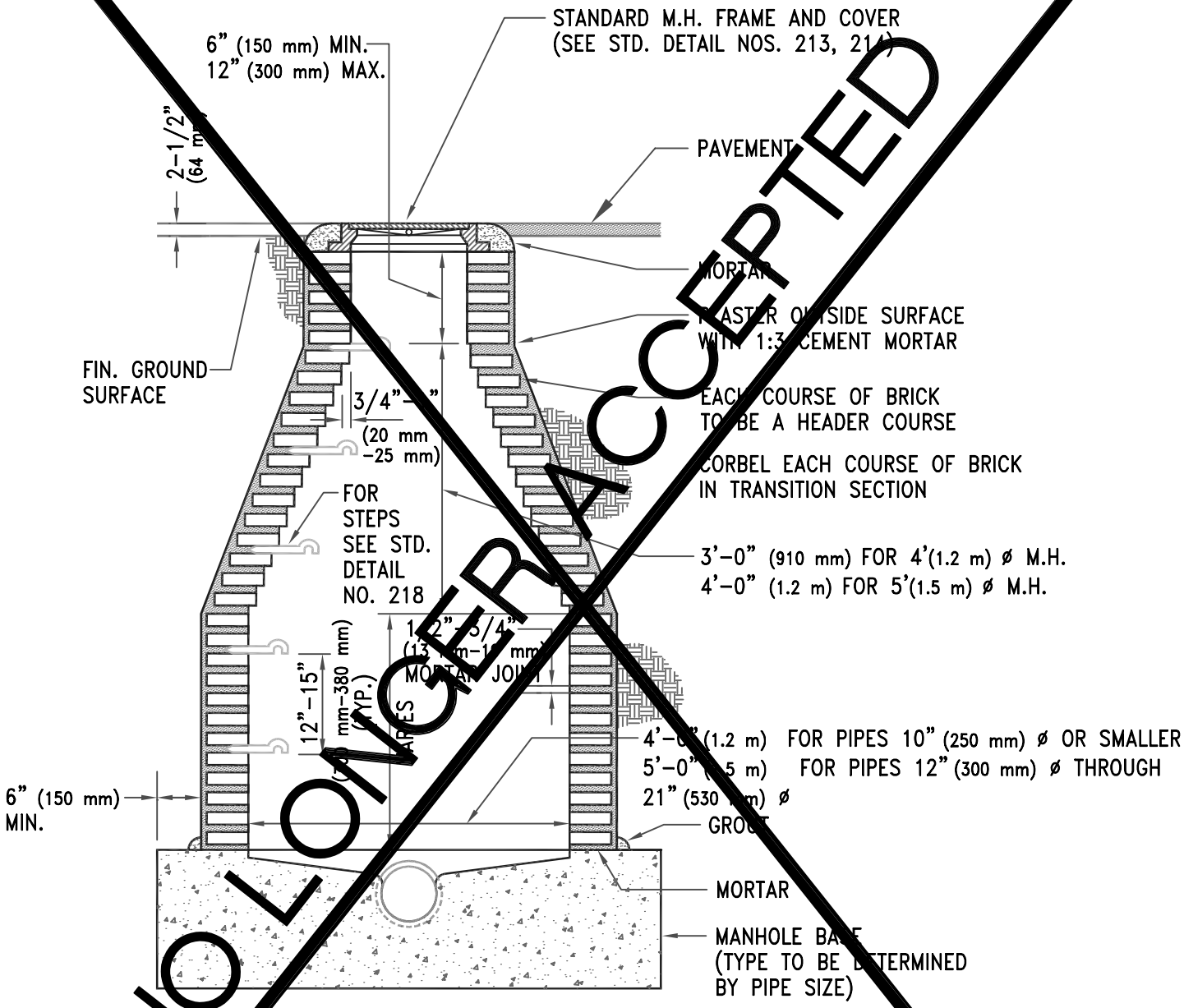

NO LONGER ACCEPTED

NOTES:

1. COMMON HARD-BURNED BRICK PER ASTM C 32 TO BE LAID IN 1:3 CEMENT MORTAR. SOLID BRICK CONFORMING TO GRADE MM OR MS MUST BE USED

2. STRIKE OFF MORTARED JOINTS INSIDE.

ISSUED:		STANDARD DETAIL		DETAIL NO.
8/92	CITY OF TUCSON ARIZONA	STANDARD BRICK MANHOLE	THE SEAL of PIMA COUNTY ARIZONA	WWM 204
DELETED				SHEET 1 OF 1
7/02				

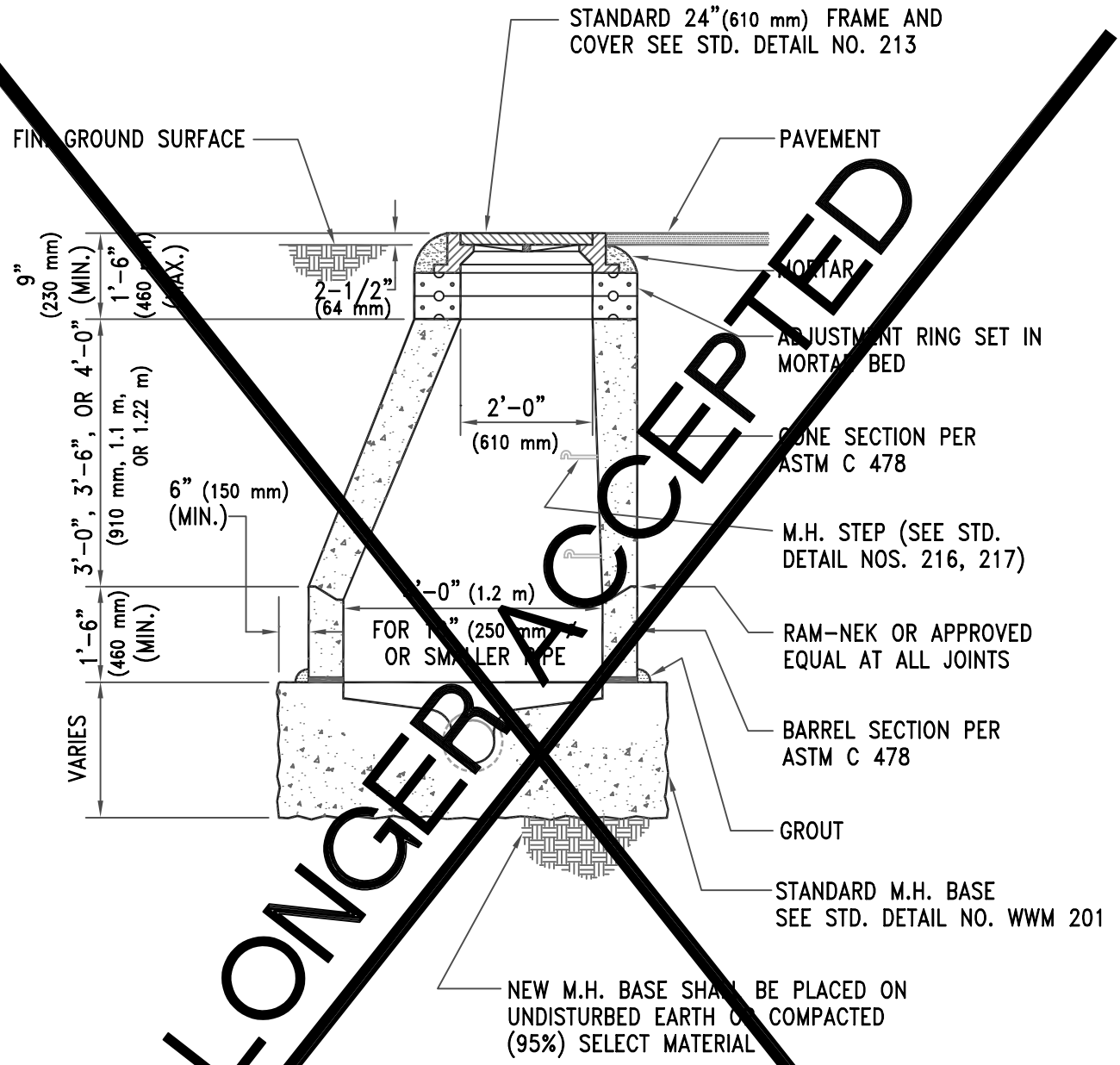

NO LONGER ACCEPTED

NOTES:

THE MINIMUM THICKNESS OF ANY BARREL OR ADJUSTMENT RING SECTION SHAL BE 1/2 THE INSIDE DIAMETER.

THE MINIMUM WALL THICKNESS OF ANY CONE SECTION SHALL BE 1/2 THE LARGEST INSIDE DIAMETER.

THE WALL THICKNESS SHALL NOT BE LESS THAN 5% OR 3/16 INCH (5 MILLIMETERS), WHICHEVER IS GREATER OF THE WALL THICKNESS NOTED ON THE PLANS.

VARIATIONS IN THE INSTALLED LENGTH OF TWO OPPOSITE SIDES OF THE MANHOLE BARREL OR CONE SECTION SHALL NOT EXCEED 5/8 INCH (16 MILLIMETERS).

A DEFICIENCY IN THE LENGTH OF A BARREL OR CONE SECTION SHALL NOT BE MORE THAN 1/4 INCH PER FOOT (20 mm per meter) OF THE LENGTH OF THE SECTION WITH A MAXIMUM DEFICIENCY IN THE TOTAL LENGTH OF THE SECTION BEING 1/2 INCH (13 MILLIMETERS).

ISSUED:		STANDARD DETAIL		DETAIL NO.
8/92	CITY OF TUCSON ARIZONA	PRECAST CONCRETE MANHOLE (4' DIA)	THE SEAL of PIMA COUNTY ARIZONA	WWM 205
DELETED				
7/02				SHEET 1 OF 1

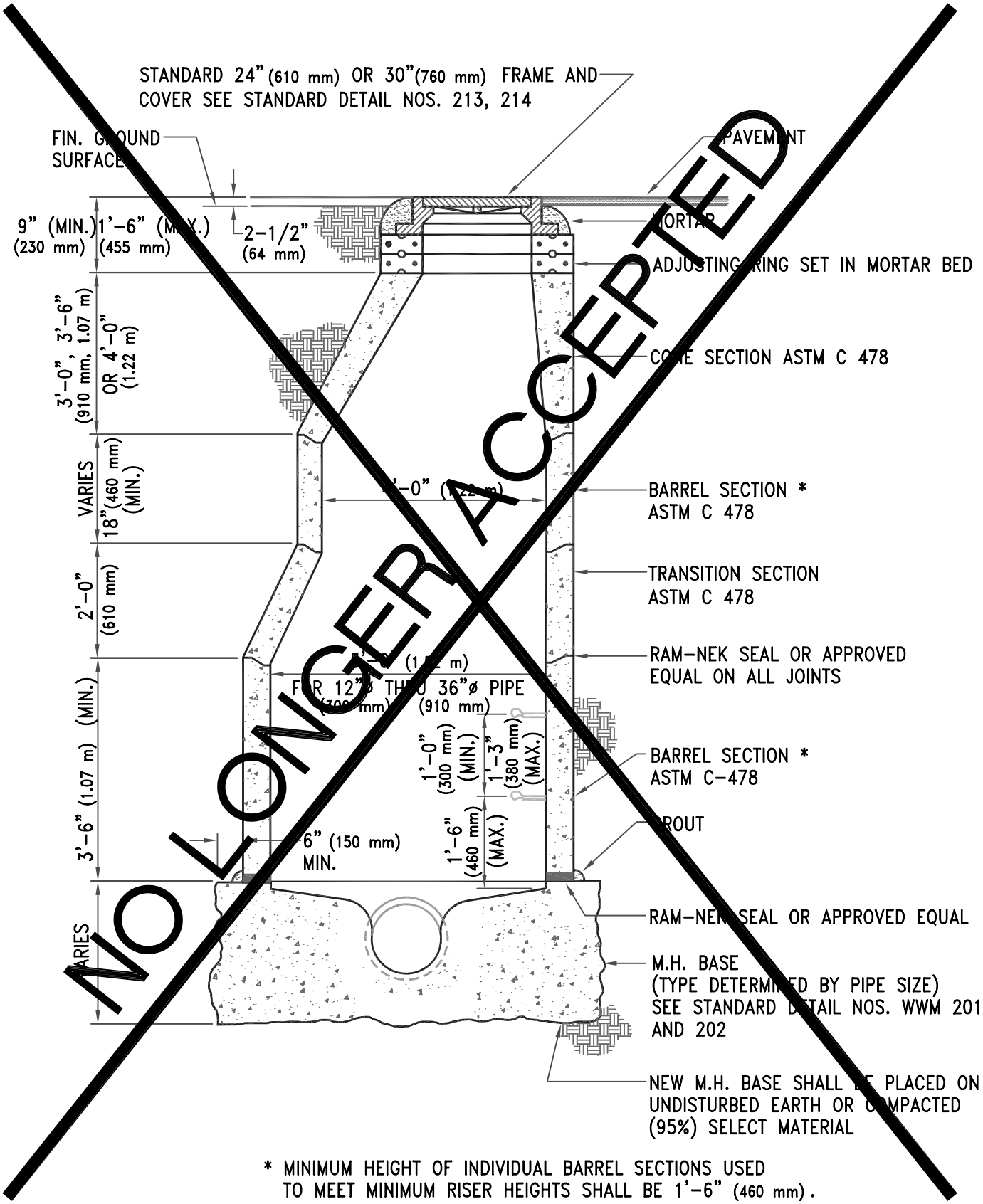

NO LONGER ACCEPTED

* MINIMUM HEIGHT OF INDIVIDUAL BARREL SECTIONS USED TO MEET MINIMUM RISER HEIGHTS SHALL BE 1'-6" (460 mm).

THE NOTES THAT COMPRISE STD. DET. WWM 205 ARE ALSO APPLICABLE TO THIS DETAIL.

ISSUED:		STANDARD DETAIL		DETAIL NO.
8/92	CITY OF TUCSON ARIZONA	PRECAST CONCRETE MANHOLE (5' DIA)	THE SEAL of PIMA COUNTY ARIZONA	WWM 206
DELETED				
7/02				SHEET 1 OF 1

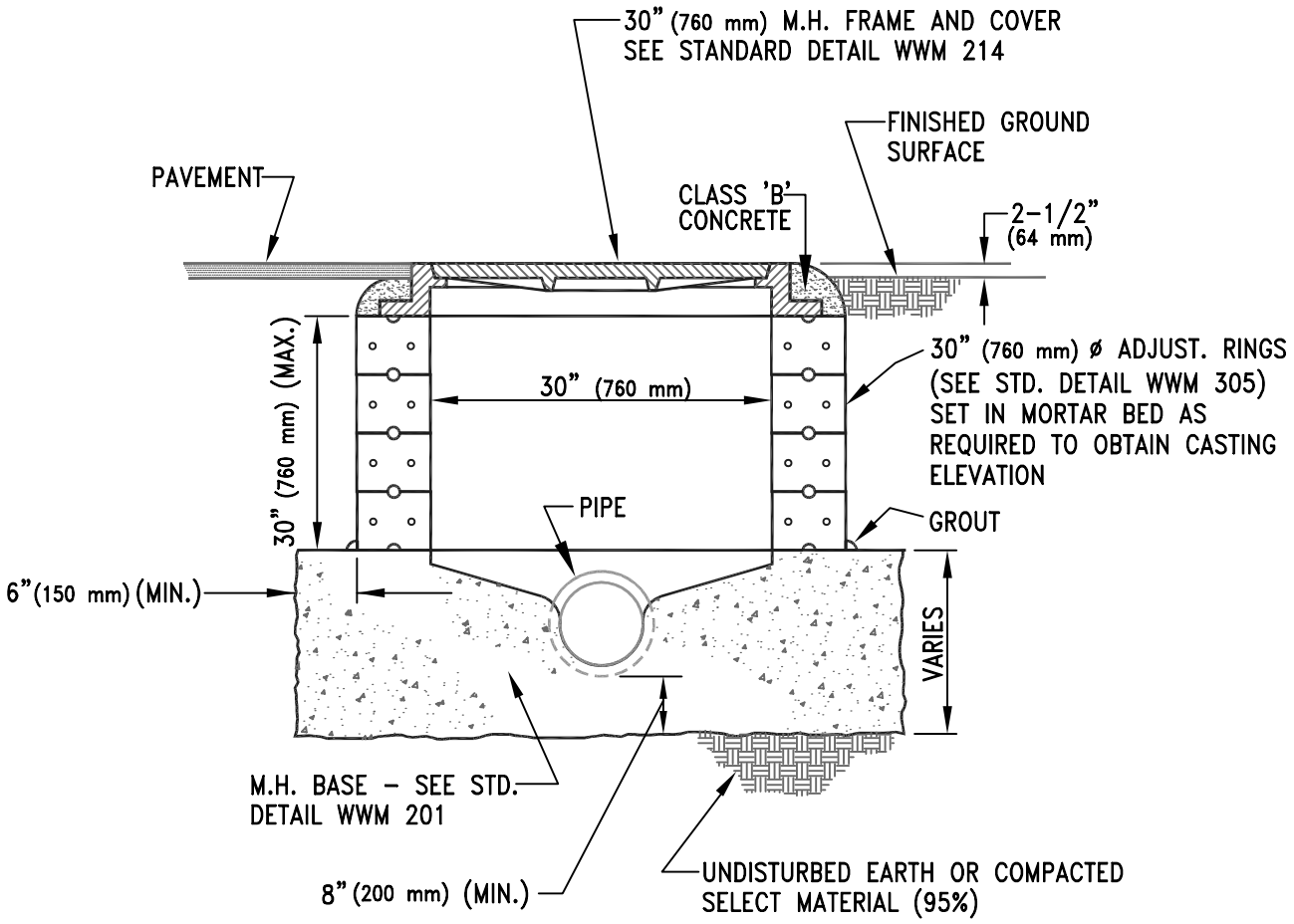

NOTE:

1. USE OF THIS TYPE OF MANHOLE IS SUBJECT TO SPECIAL APPROVAL FROM PCWMD

ISSUED:		STANDARD DETAIL		DETAIL NO.
8/92		SHALLOW MANHOLE		WWM 207
REVISED:				
7/02				SHEET 1 OF 1

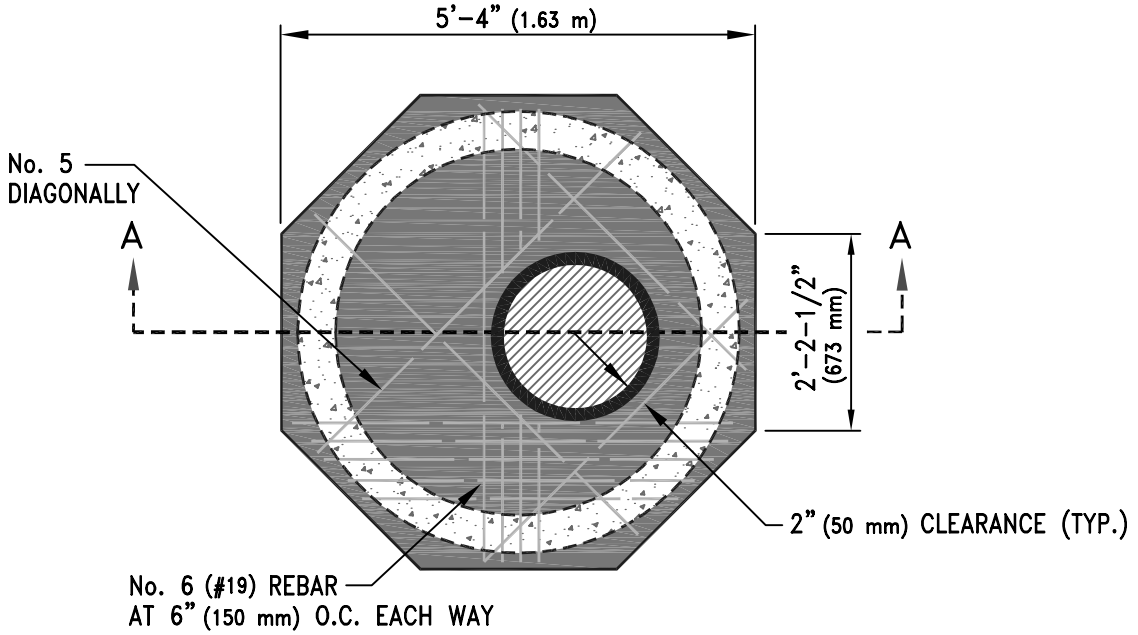

PLAN VIEW

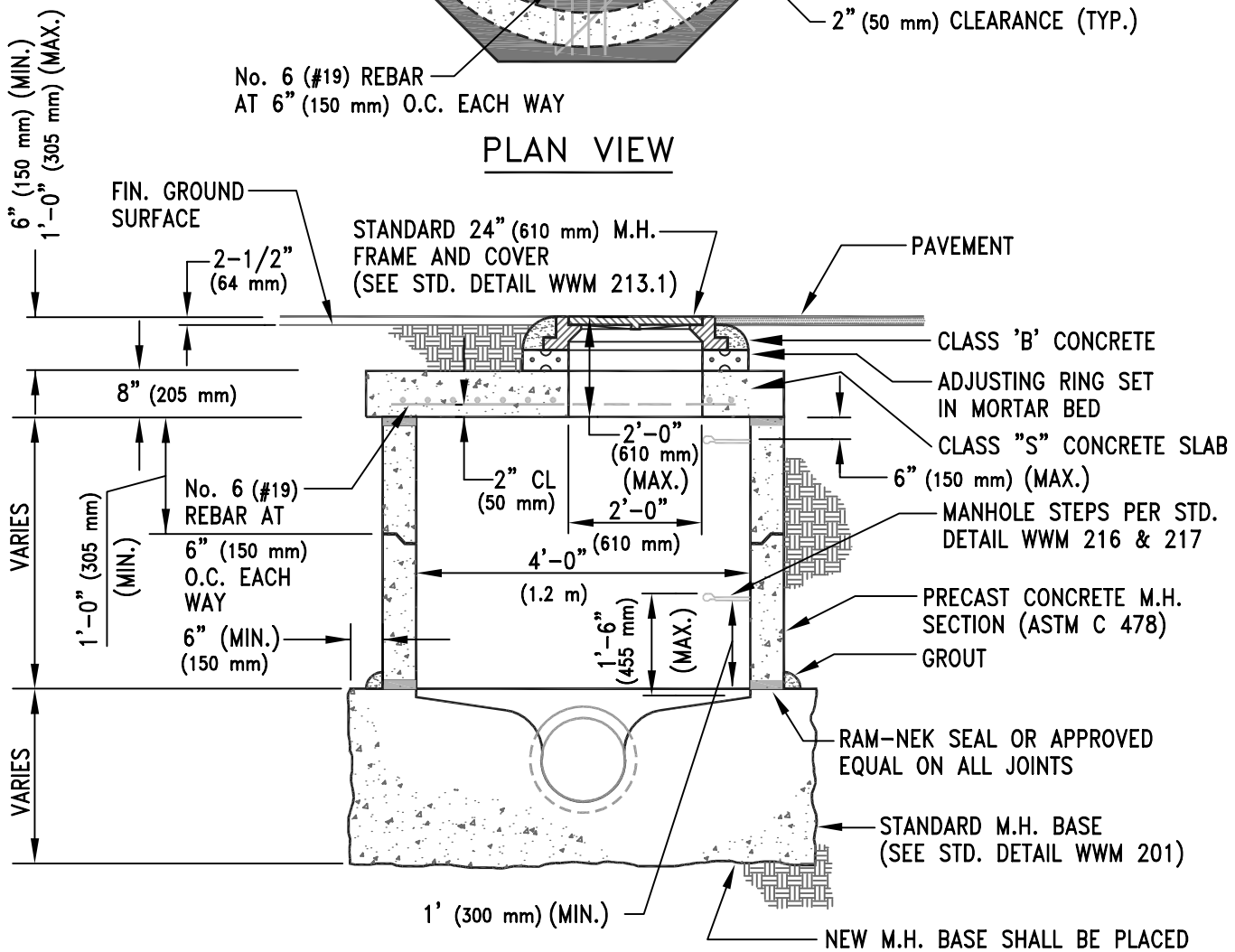

SECTION A-A

ISSUED:		STANDARD DETAIL		DETAIL NO.
8/92	CITY OF TUCSON FOUNDED 1776	FLAT TOP MANHOLE (4' (1.22 m) DIA.)	THE SEAL of PIMA COUNTY ARIZONA	WWM 208
REVISED: 7/02				SHEET 1 OF 1

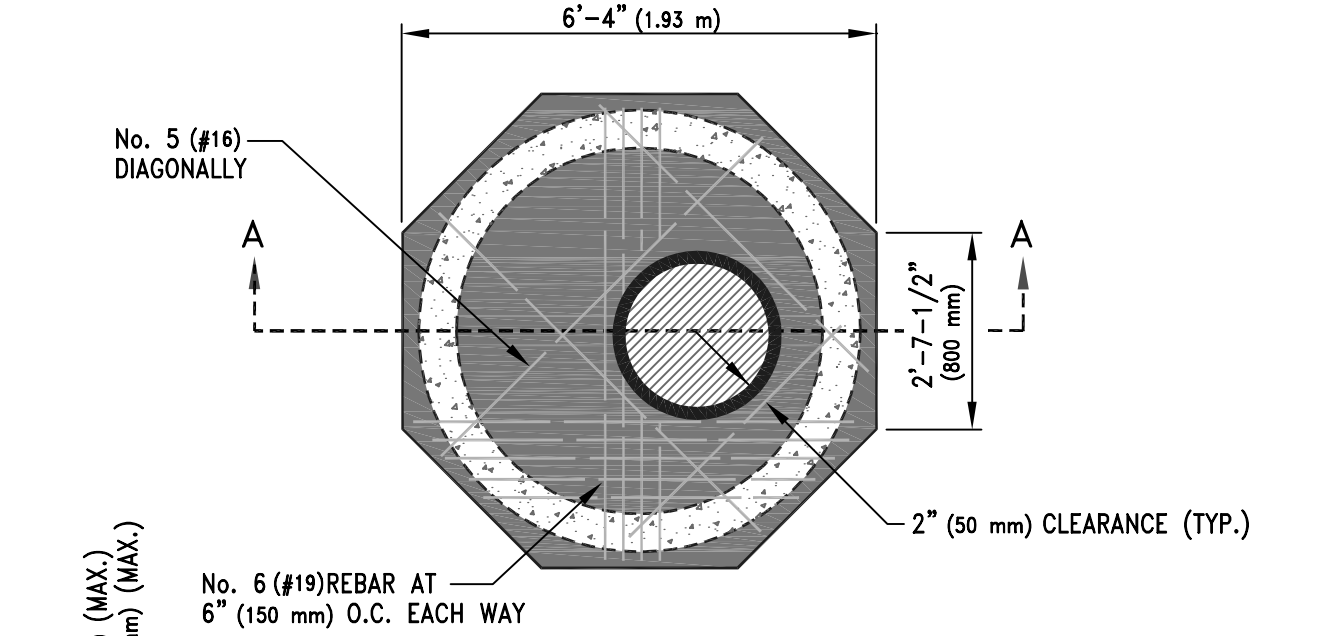

PLAN VIEW

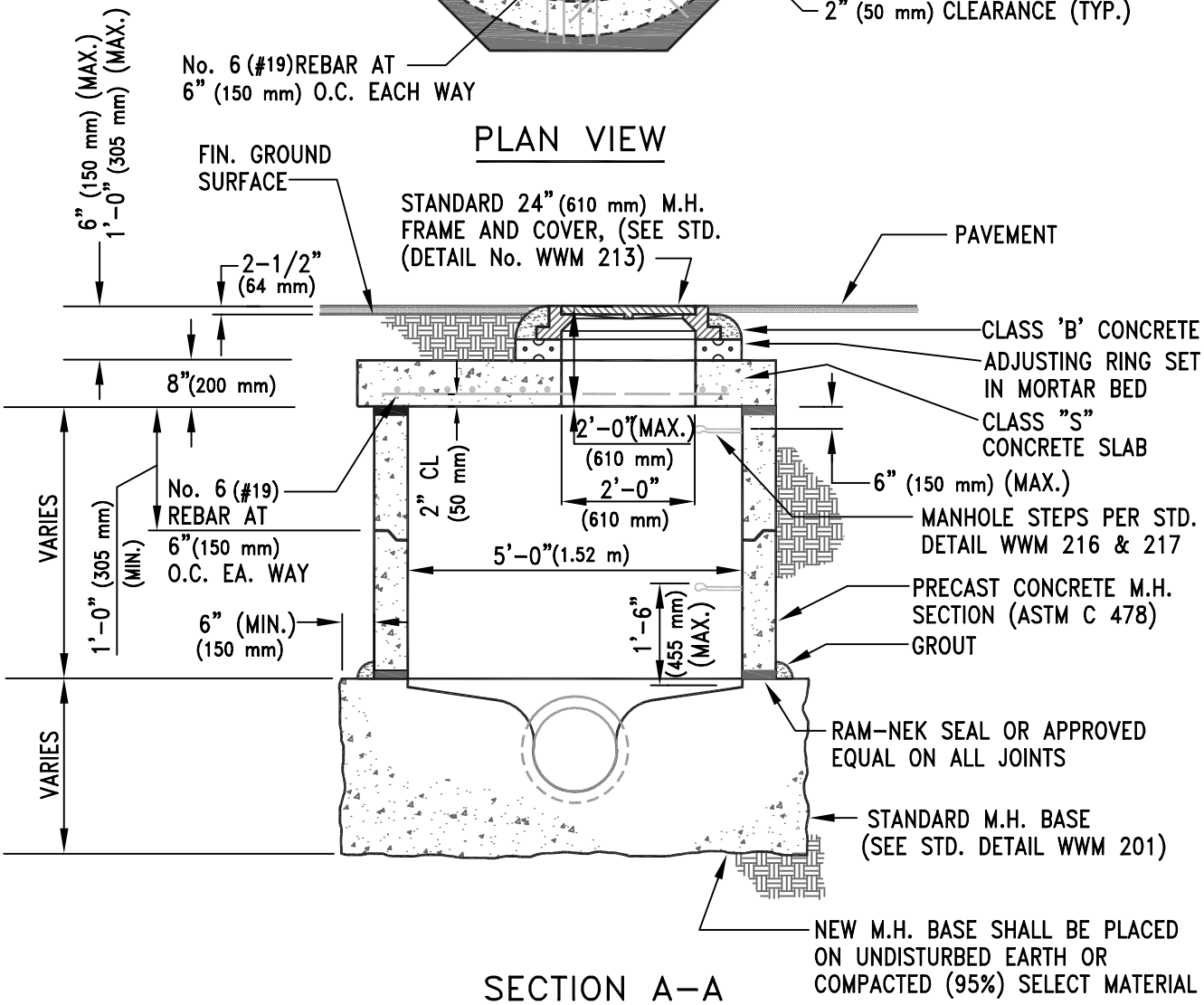

SECTION A-A

ISSUED:		STANDARD DETAIL		DETAIL NO.
8/92	CITY OF TUCSON FOUNDED 1776	FLAT TOP MANHOLE - TYPE "A"	THE SEAL of PIMA COUNTY ARIZONA	WWM 209
REVISED: 7/02				SHEET 1 OF 1

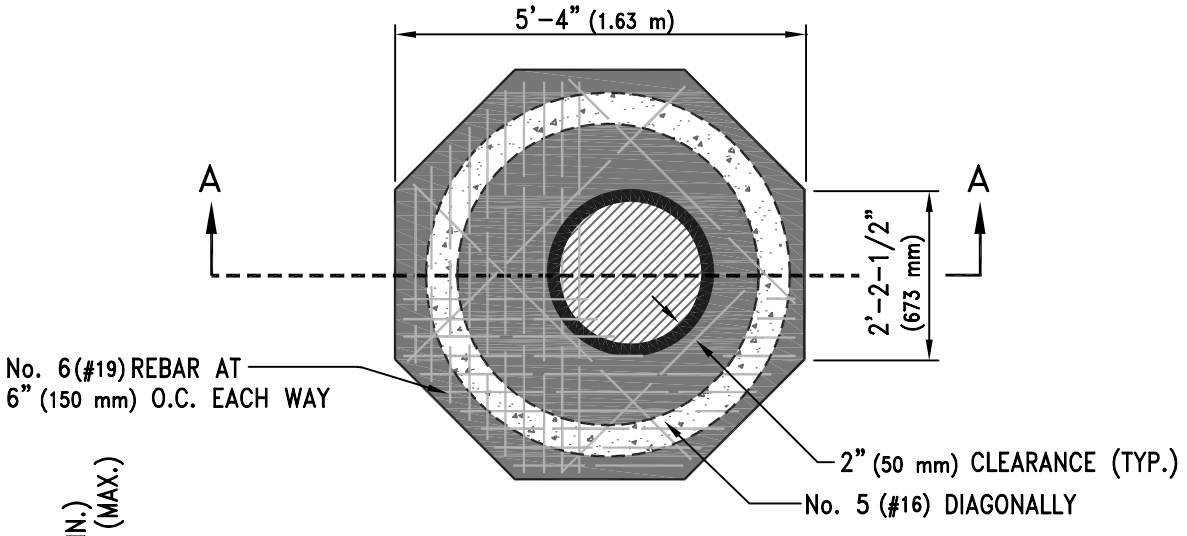

PLAN VIEW

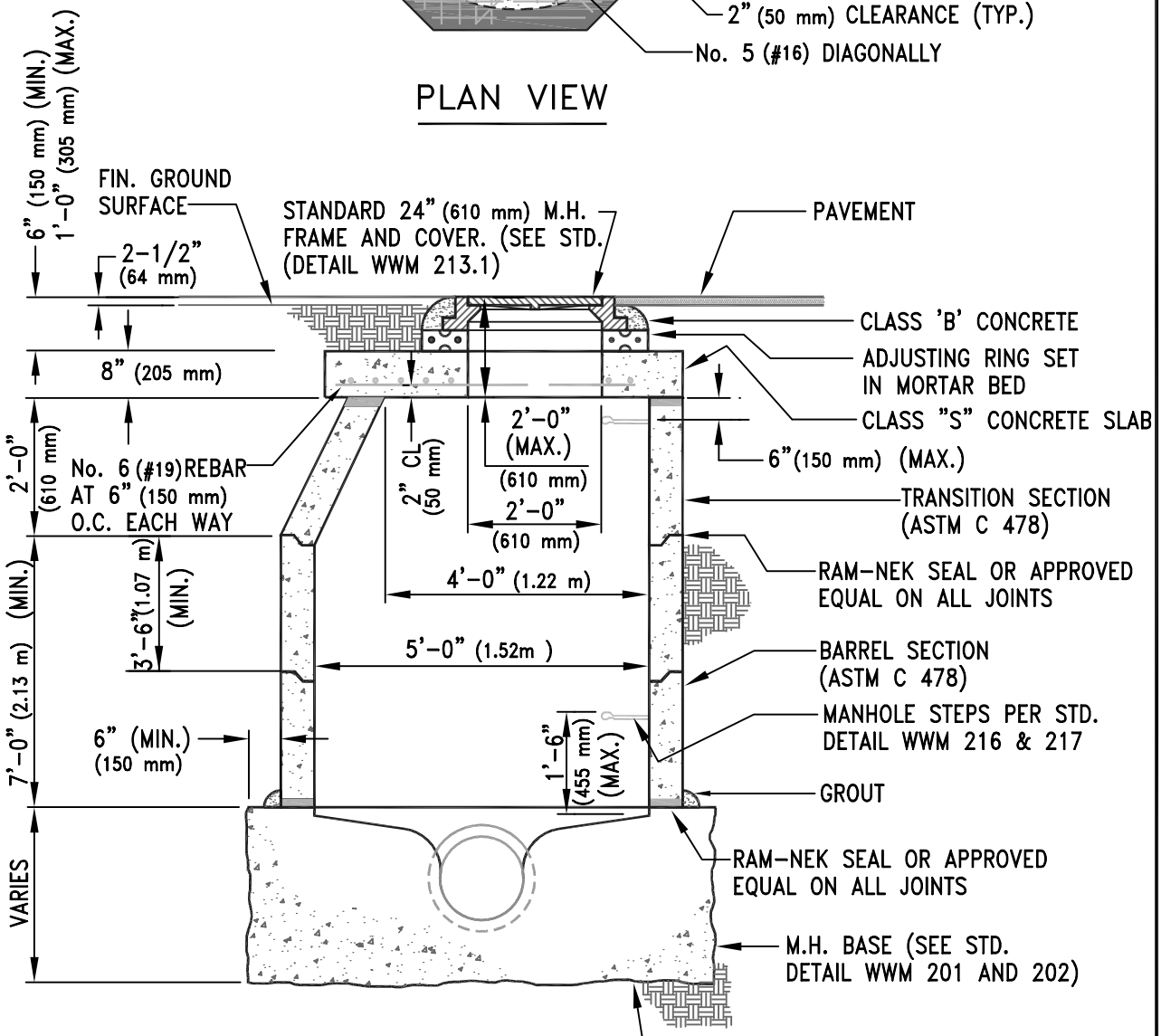

SECTION A-A

ISSUED:		STANDARD DETAIL		DETAIL NO.
8/92	CITY OF TUCSON FOUNDED 1776	FLAT TOP MANHOLE - TYPE "B"	THE SEAL of PIMA COUNTY ARIZONA	WWM 210
REVISED: 7/02				SHEET 1 OF 1

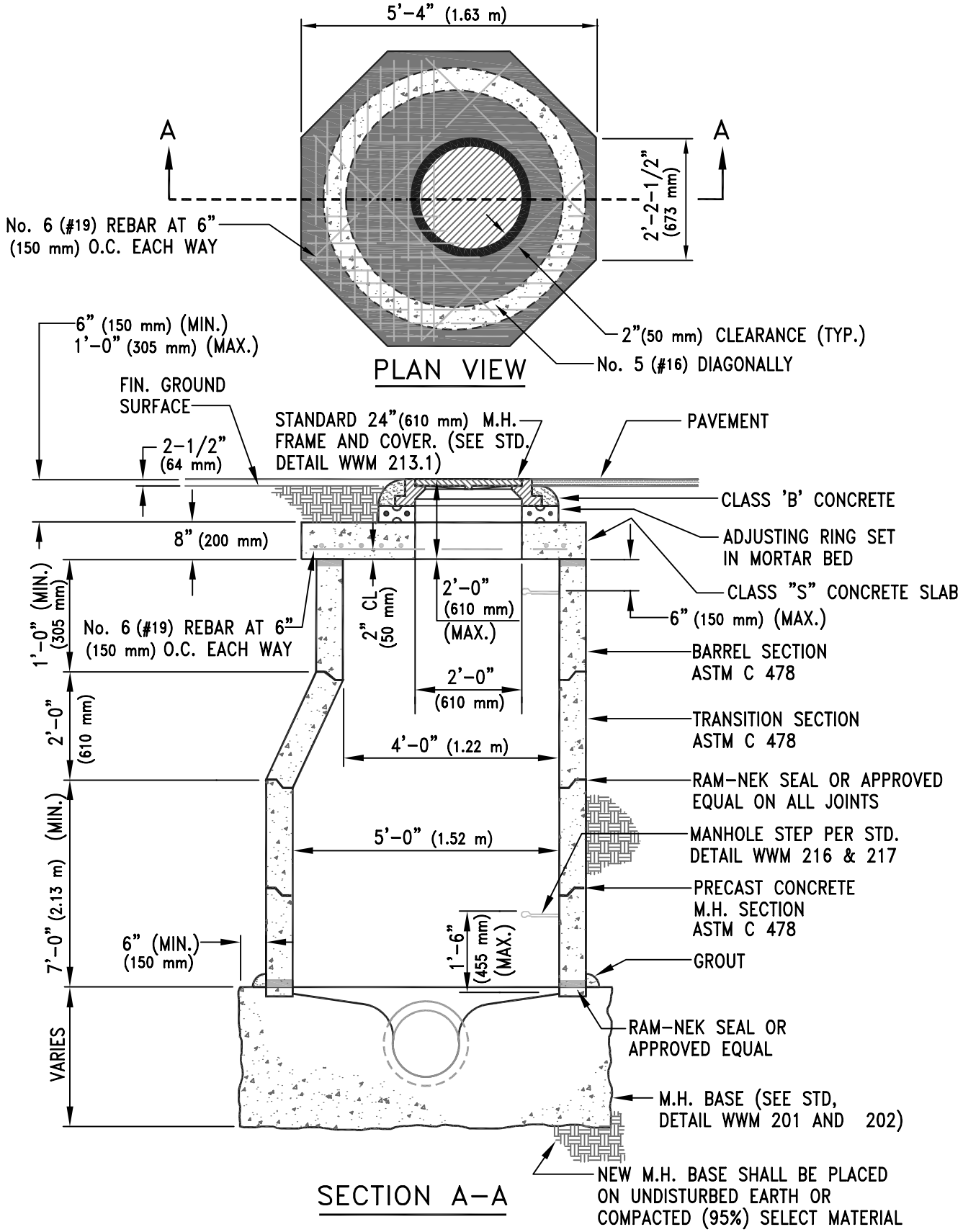

ISSUED:		STANDARD DETAIL		DETAIL NO.
8/92	CITY OF TUCSON FOUNDED 1776	FLAT TOP MANHOLE - TYPE "C"	THE SEAL of PIMA COUNTY ARIZONA	WWM 211
REVISED: 7/02				SHEET 1 OF 1

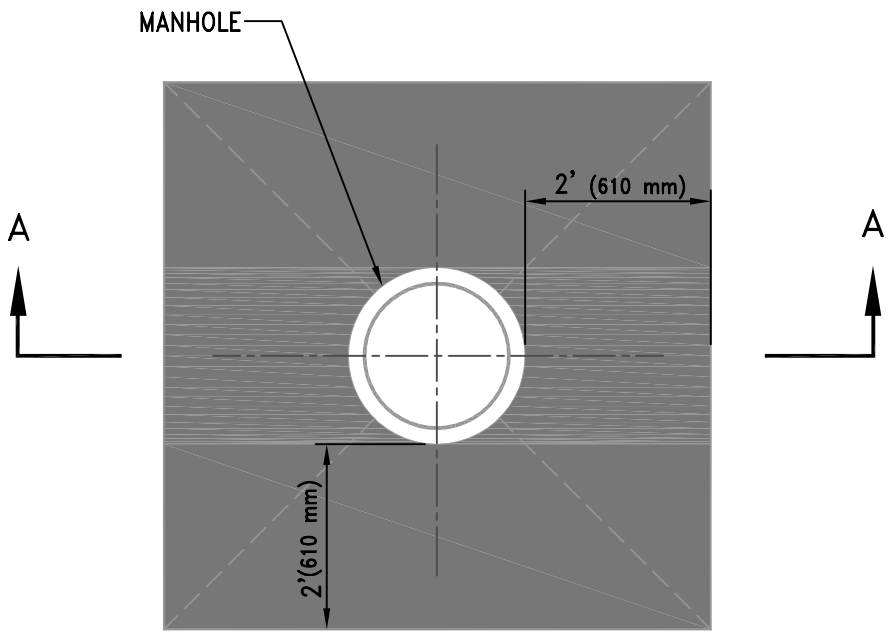

PLAN

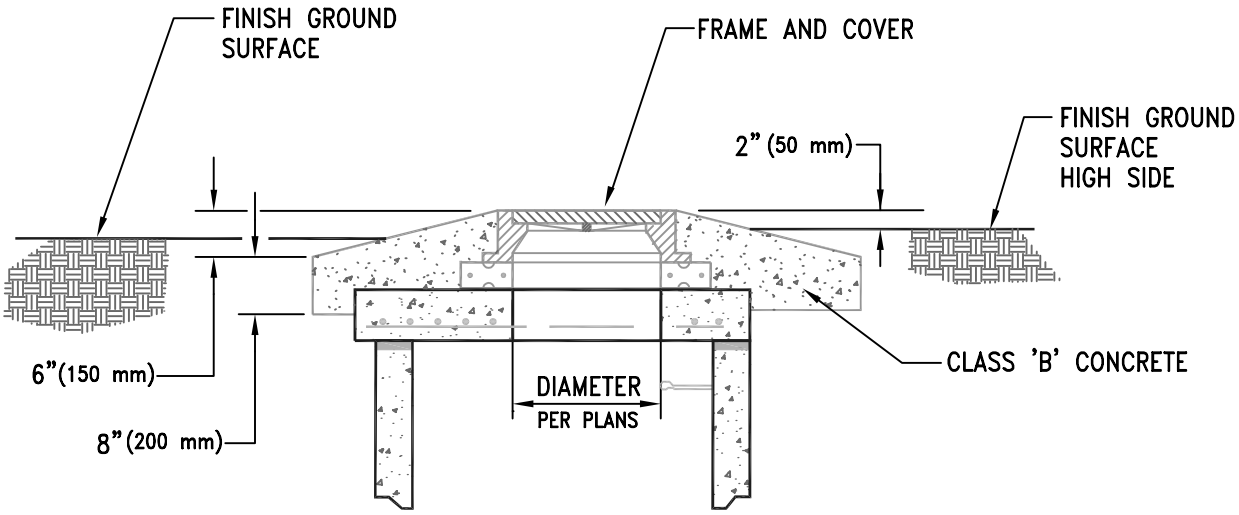

SECTION A–A

ISSUED:		STANDARD DETAIL		DETAIL NO.
9/93		UNPAVED AREA CONCRETE COLLAR		WWM 212
REVISED:				
7/02				SHEET 1 OF 1

GENERAL

MANHOLE NOTES:

1. THE MINIMUM WALL THICKNESS OF ANY MANHOLE SECTION SHALL BE 1/12 THE INSIDE DIAMETER OF THE BARREL OR THE LARGEST CONE DIAMETER. THE WALL THICKNESS SHALL NOT VARY FROM THE DESIGN WALL THICKNESS BY MORE THAN FIVE PERCENT OR 3/16 INCH (5 millimeters), WHICHEVER IS GREATER. THE VARIATIONS IN LAYING LENGTHS OF TWO OPPOSITE SIDES OF MANHOLE SECTIONS SHALL NOT BE MORE THAN 5/8 INCH (16 millimeters). THE UNDERRUN IN LENGTH OF A SECTION OF MANHOLE BASE, RISER, OR CONICAL TOP SHALL NOT BE MORE THAN 1/4 INCH (20 millimeters) PER FOOT OF LENGTH WITH A MAXIMUM OF 1/2 INCH (13 millimeters) IN ANY ONE SECTION.

MANHOLE FRAME/COVER NOTES:

1. ANY VARIATION FROM THE REQUIREMENTS INDICATED BY THE APPLICABLE STANDARD DETAIL SHALL REQUIRE THE SUBMITTAL OF SHOP DRAWINGS FOR REVIEW AND APPROVAL BY PCWMD.

2. FRAMES AND COVERS SHALL BE MADE FROM FERROUS MATERIALS USING AT LEAST 75% POST CONSUMER WASTE. THE BASIC DESIGN, INITIAL SAMPLE CASTINGS AND FIRST ARTICLE INSPECTION (ALSO KNOWN AS FIRST PROOF LOAD TESTS) MUST BE PR-APPROVED BY PIMA COUNTY WASTEWATER MANAGEMENT BEFORE DELIVERY TO SUPPLIERS OR CONTRACTORS. ALL LETTERING ON THE FRAMES AND COVERS MUST MATCH THAT SHOWN ON THE STANDARD DETAILS UNLESS SPECIAL PERMISSION, IN WRITING, IS OBTAINED FROM PIMA COUNTY WASTEWATER MANAGEMENT.

3. PUBLIC SANITARY SEWER COVERS SHALL BE LETTERED "PIMA COUNTY SANITARY SEWER"

4. LETTERING FOR COVERS SHALL BE STANDARD RAISED BLOCK TYPE, AND SHALL BE 1 1/2" (38 mm) TO 2 1/2" (64 mm) HIGH. THE TOTAL WIDTH OF INDIVIDUAL LETTERS ARE TO BE SUCH THAT LETTERS AND WORDS ARE EQUALLY SPACED AND BALANCED TO FORM A COMPLETE CIRCLE WITH SPACES BEFORE AND AFTER WORDS.

5. THE TOP SURFACE OF THE COVER SHALL SIT FLUSH WITH THE TOP SURFACE OF THE FRAME. A UNIFORM 1/8 INCH (3 mm) CLEARANCE SHALL EXIST BETWEEN THE EDGE OF THE COVER AND THE FRAME. ALL HORIZONTAL BEARING SURFACES SHALL BE MACHINE FINISHED.

6. THE DESIGN AND CONSTRUCTION OF PRIVATE SEWAGE CONVEYANCE SYSTEM MAY UTILIZE (OR MAKE REFERENCE TO) CERTAIN PIMA COUNTY WASTEWATER MANAGEMENT SPECIFICATIONS AND DETAILS; HOWEVER PRIVATE SYSTEMS MANHOLE COVERS SHALL NOT BE IMPRINTED WITH THE WORDS "PIMA COUNTY SANITARY SEWER". INSTEAD, THE SEWER MANHOLE COVERS LOCATED ON MANHOLES IN SANITARY SEWER SYSTEMS TO BE OWNED AND OPERATED BY ANYONE OTHER THAN PIMA COUNTY, SHALL HAVE CAST INTO THEM THE WORDS "PRIVATE SANITARY SEWER", OR OTHER APPROPRIATE DESIGNATION.

7. UNLESS OTHERWISE APPROVED BY PCWMD, THE WEIGHT OF THE FRAME AND COVER SHALL BE NO MORE THAN 2% LESS THAN THE APPROXIMATE WEIGHT SPECIFIED IN THE APPLICABLE STANDARD DETAIL FOR EACH COMPONENT.

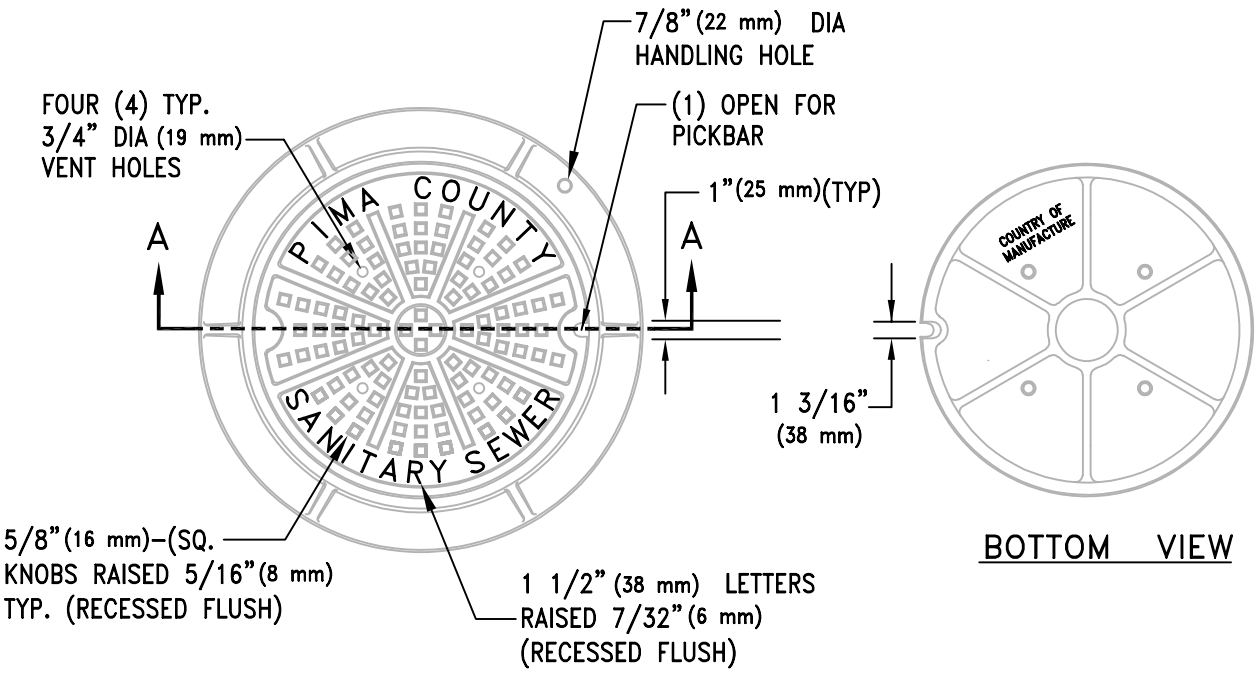

FRAME AND COVER – PLAN VIEW

BOTTOM VIEW

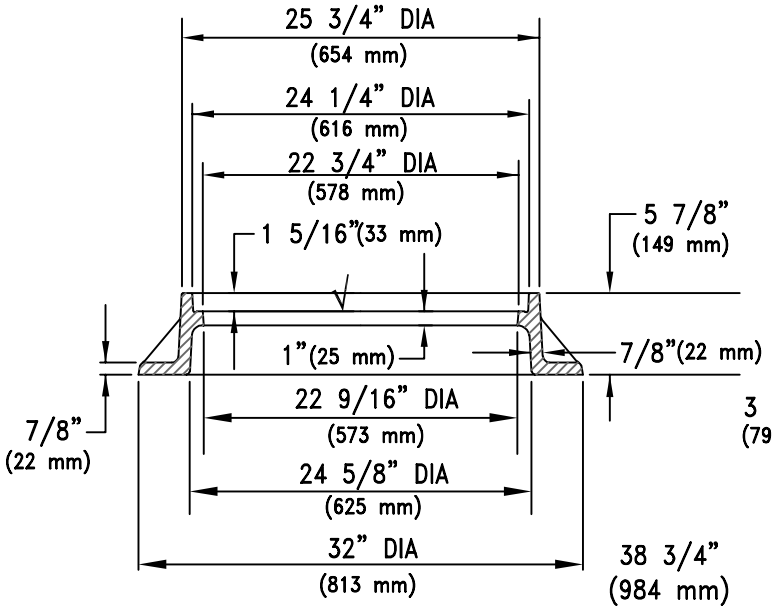

FRAME SECTION A–A

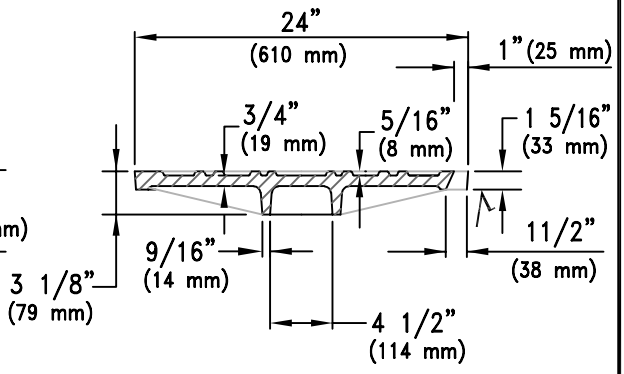

COVER SECTION

√ DENOTES MACHINED SURFACE

NOTES:

1. REFER TO GENERAL NOTES, STD. DETAIL WWM 213.0
2. FRAME WEIGHT 180 LBS. (82 kg) (APPROX.)
3. COVER WEIGHT 130 LBS. (59 kg)(APPROX.)

ISSUED:		STANDARD DETAIL		DETAIL NO.
8/92	CITY OF TUCSON FOUNDED 1776	24" (610 mm) DIA. MANHOLE FRAME AND COVER	THE SEAL of PIMA COUNTY ARIZONA	WWM 213.1
REVISED: 7/02				SHEET 1 OF 1

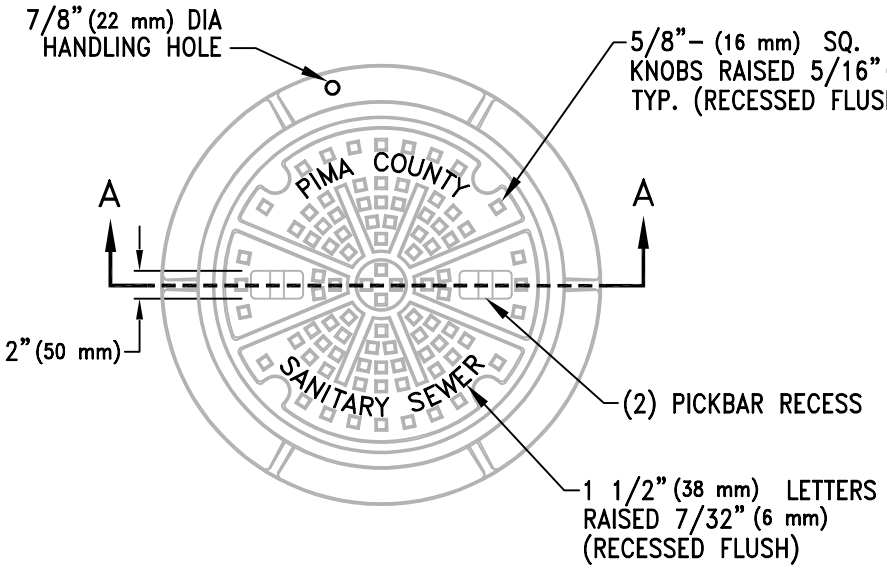

FRAME AND COVER – PLAN VIEW

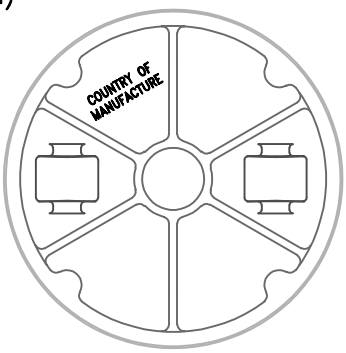

BOTTOM VIEW

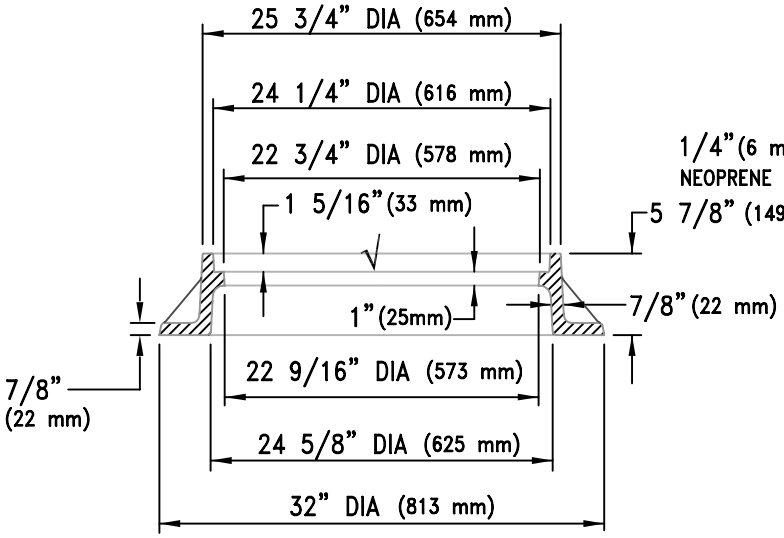

FRAME SECTION A–A

√ DENOTES MACHINED SURFACE

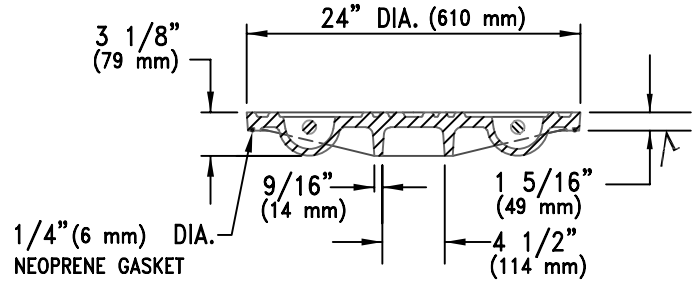

COVER SECTION

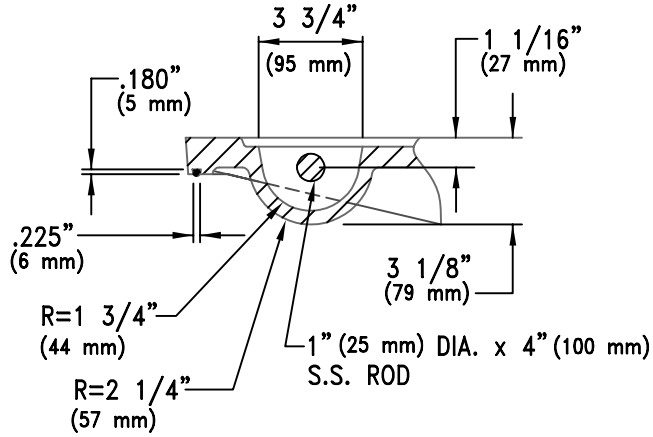

PICKBAR RECESS DETAIL

NOTES:

1. REFER TO GENERAL NOTES, STD. DETAIL WWM 213.0.
2. THE COVER SHALL HAVE PICKBAR RECESSES AS DETAILED HEREIN. VENT HOLES SHALL NOT BE PROVIDED.
3. FRAME WEIGHT 180 lbs. (82 Kg) (APPROX.).
4. COVER WEIGHT 130 LBS. (59 Kg) (APPROX.).

ISSUED:		STANDARD DETAIL		DETAIL NO.
8/92	CITY OF TUCSON FOUNDED 1776	24" (610 mm) WATERPROOF MANHOLE FRAME AND COVER	THE SEAL of PIMA COUNTY ARIZONA	WWM 213.2
REVISED: 7/02				SHEET 1 OF 1

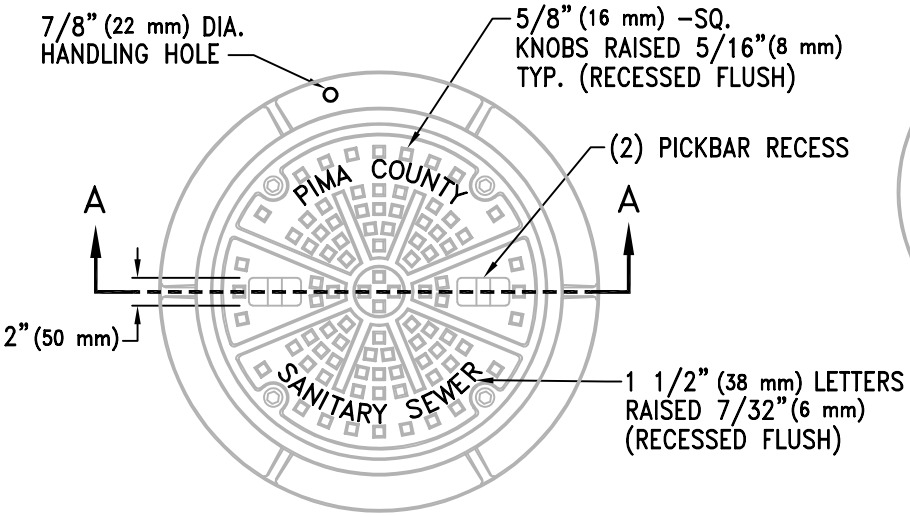

FRAME AND COVER - PLAN VIEW

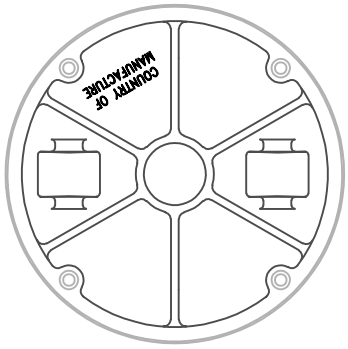

BOTTOM VIEW

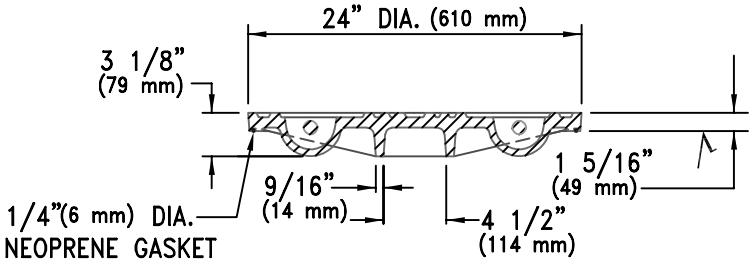

COVER SECTION

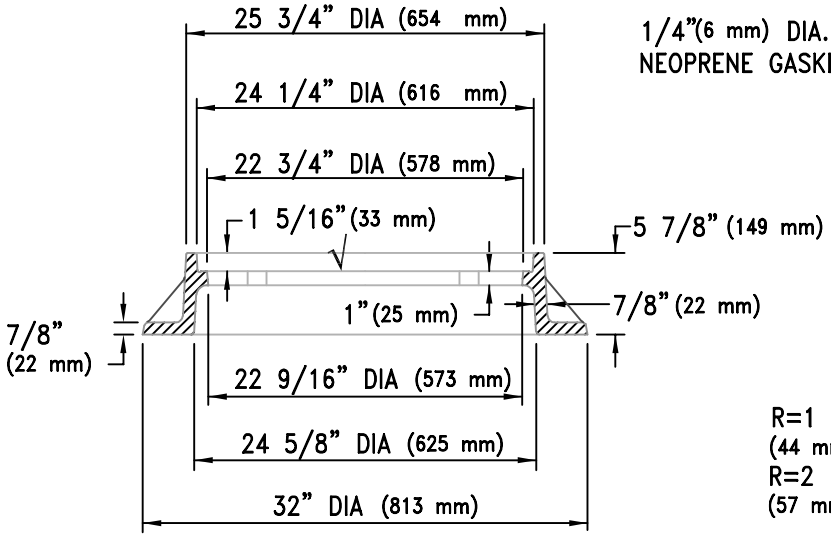

FRAME SECTION A-A

√ DENOTES MACHINED SURFACE

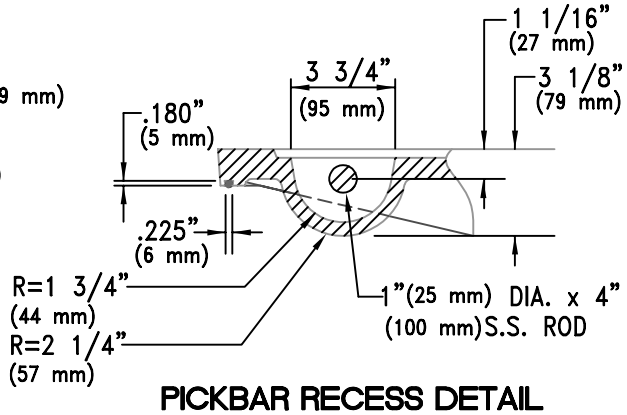

PICKBAR RECESS DETAIL

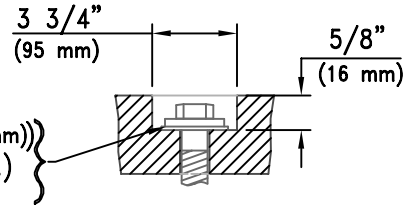

STAINLESS STEEL HEX. BOLT (1/2"(13 mm)–13 x 1 3/4"(5 x 44 mm))
STAINLESS STEEL WASHER (1/2"(13 mm)I.D. x 1 1/4"(32 mm) O.D.)
RUBBER WASHER (1/2"(13 mm) FLAT)

BOLTHOLE DETAIL

NOTES:

1. REFER TO GENERAL NOTES, STD. DETAIL WWM 213.0.
2. THE COVER SHALL HAVE PICKBAR RECESSES. VENT HOLES SHALL NOT BE PROVIDED.
3. FRAME WEIGHT 180 LBS.(82 Kg) (APPROX.).
4. COVER WEIGHT 130 LBS (59 Kg) (APPROX.).

ISSUED:		STANDARD DETAIL		DETAIL NO.
8/92	CITY OF TUCSON FOUNDED 1776	24" (610 mm) BOLTED WATERPROOF MANHOLE FRAME AND COVER	THE SEAL of PIMA COUNTY ARIZONA	WWM 213.3
REVISED: 7/02				SHEET 1 OF 1

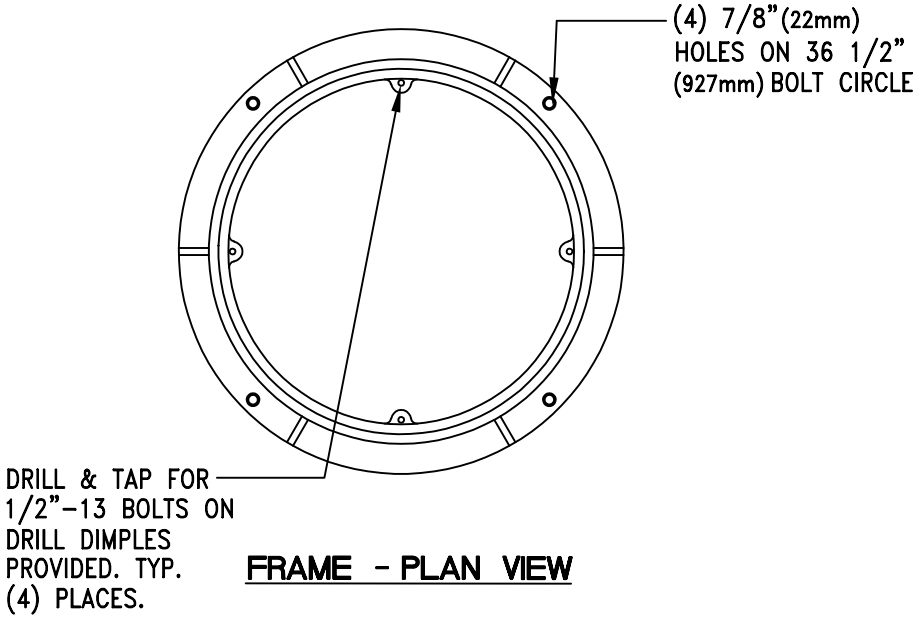

FRAME - PLAN VIEW

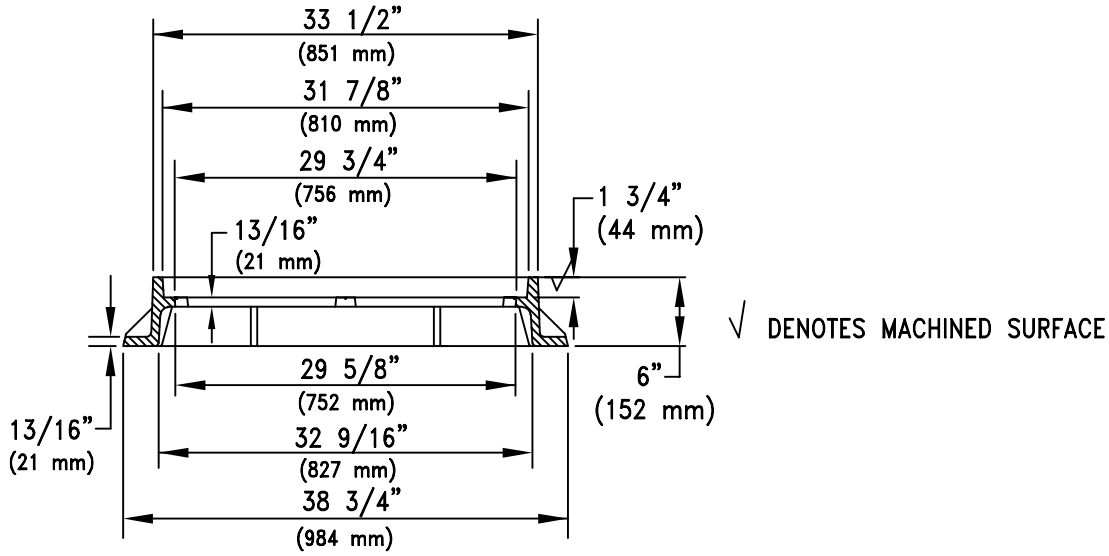

FRAME SECTION

NOTES:

1. REFER TO GENERAL NOTES, STD. DET. WWM 213.0.
2. DETAIL FOR MANHOLES OF MAINS OF 27" (675 mm) DIAMETER OR LARGER.
3. THE COVER SHALL HAVE RECESSES FOR PICK BAR. VENT HOLES SHALL NOT BE PROVIDED.
4. FRAME WEIGHT 200 LBS. (91 kg.) (APPROX.).
5. COVER WEIGHT 217 LBS. (98 kg.) (APPROX.).

ISSUED:		STANDARD DETAIL		DETAIL NO.
8/92	CITY OF TUCSON FOUNDED 1776	30" (760 mm) DIA. MANHOLE FRAME	THE SEAL of PIMA COUNTY ARIZONA	214.0
REVISED: 7/02				SHEET 1 OF 2

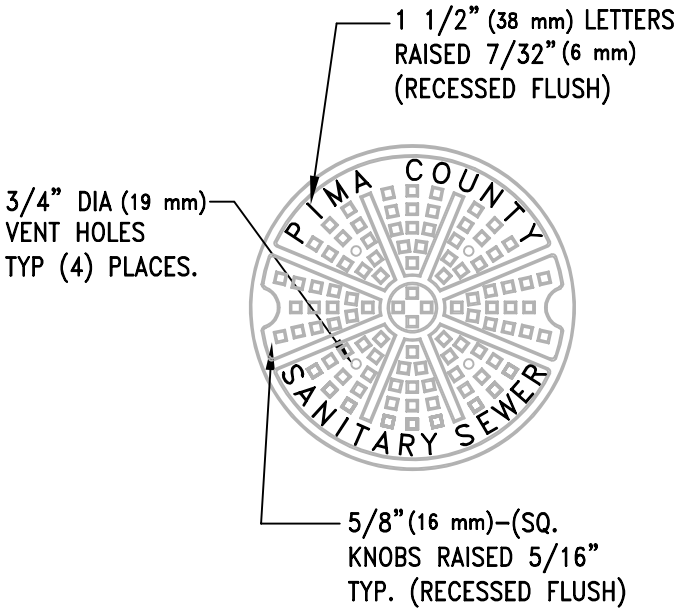

TOP VIEW

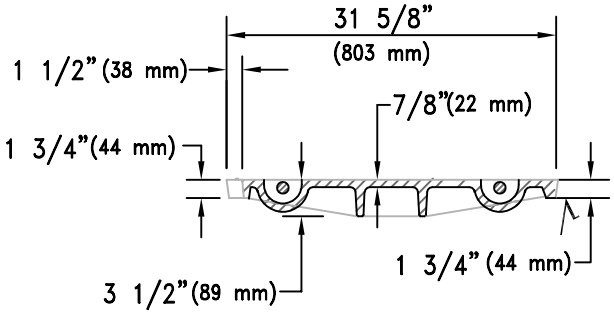

COVER SECTION

√ DENOTES MACHINED SURFACE

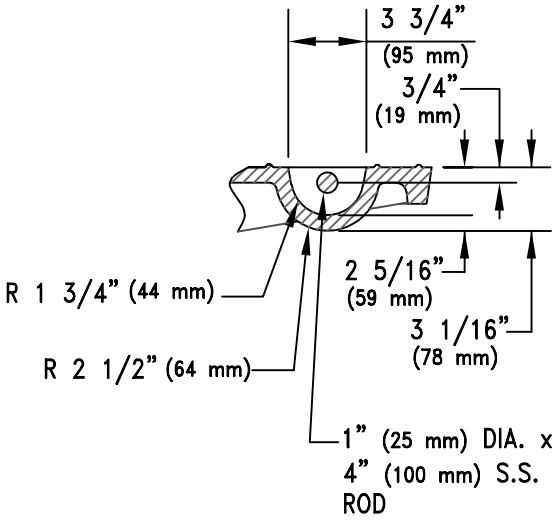

PICKBAR RECESS DETAIL

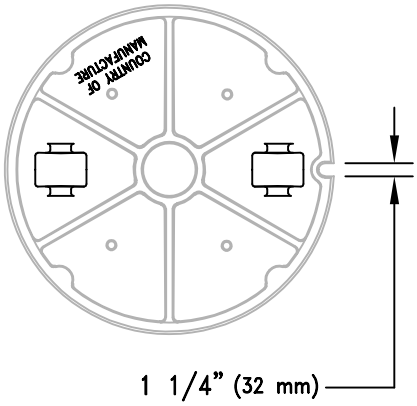

BOTTOM VIEW

ISSUED:		STANDARD DETAIL		DETAIL NO.
8/92	CITY OF TUCSON FOUNDED 1776	30" (760 mm) DIA. MANHOLE COVER	THE SEAL of PIMA COUNTY ARIZONA	214.0
REVISED: 7/02				SHEET 2 OF 2

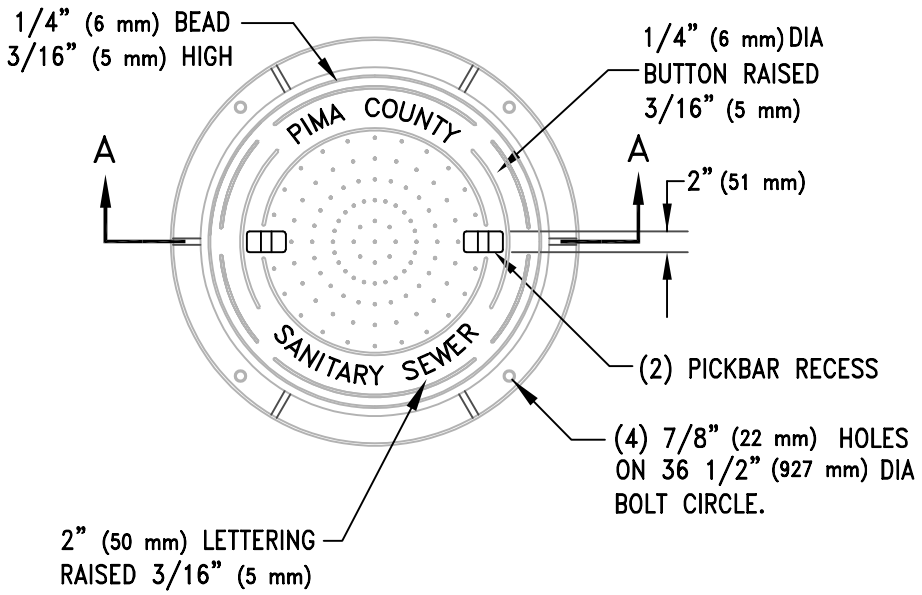

FRAME AND COVER – PLAN VIEW

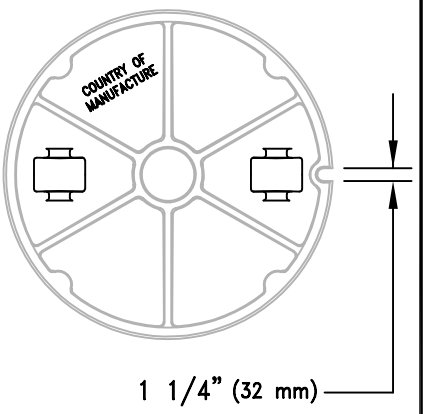

BOTTOM VIEW

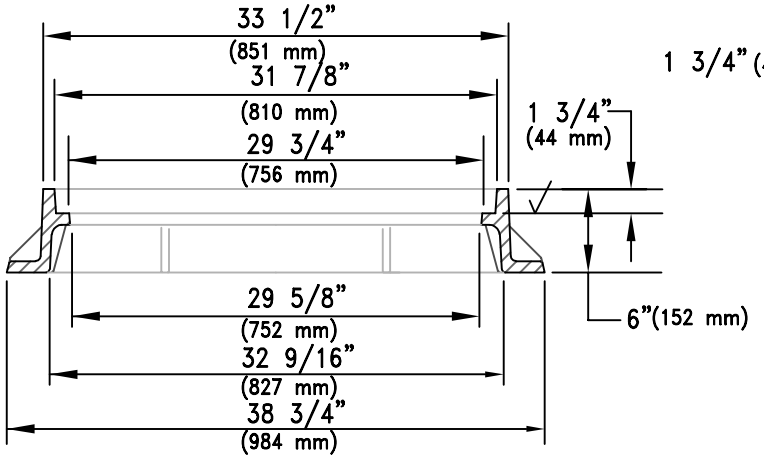

FRAME SECTION A–A

√ DENOTES MACHINED SURFACE

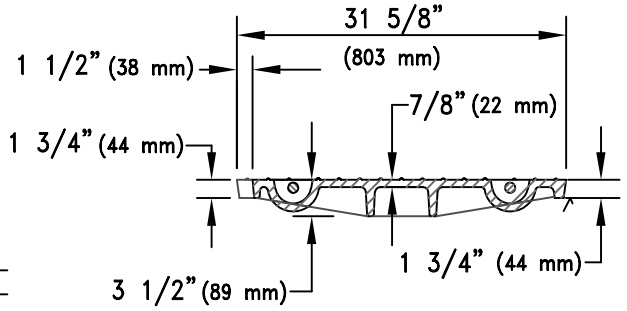

COVER SECTION

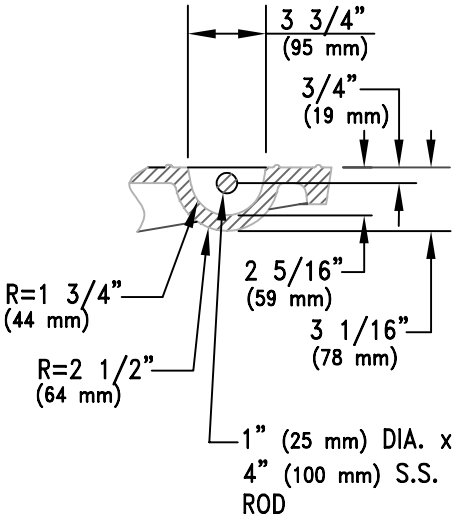

PICKBAR RECESS DETAIL

NOTES:

1. REFER TO GENERAL NOTES, STD. DET. WWM 213.0.
2. DETAIL FOR MANHOLES OF MAINS OF 27"(675 mm) DIAMETER OR LARGER.
3. THE COVER SHALL HAVE RECESSES FOR PICK BAR. VENT HOLES SHALL NOT BE PROVIDED.
4. FRAME WEIGHT 200 LBS. (91 kg.) (APPROX.).
5. COVER WEIGHT 217 LBS. (98 kg.) (APPROX.).

ISSUED:		STANDARD DETAIL		DETAIL NO.
8/92	CITY OF TUCSON FOUNDED 1776	30" (760 mm) WATERPROOF MANHOLE FRAME AND COVER	THE SEAL of PIMA COUNTY ARIZONA	WWM 214.1
REVISED: 1/02				SHEET 1 OF 1

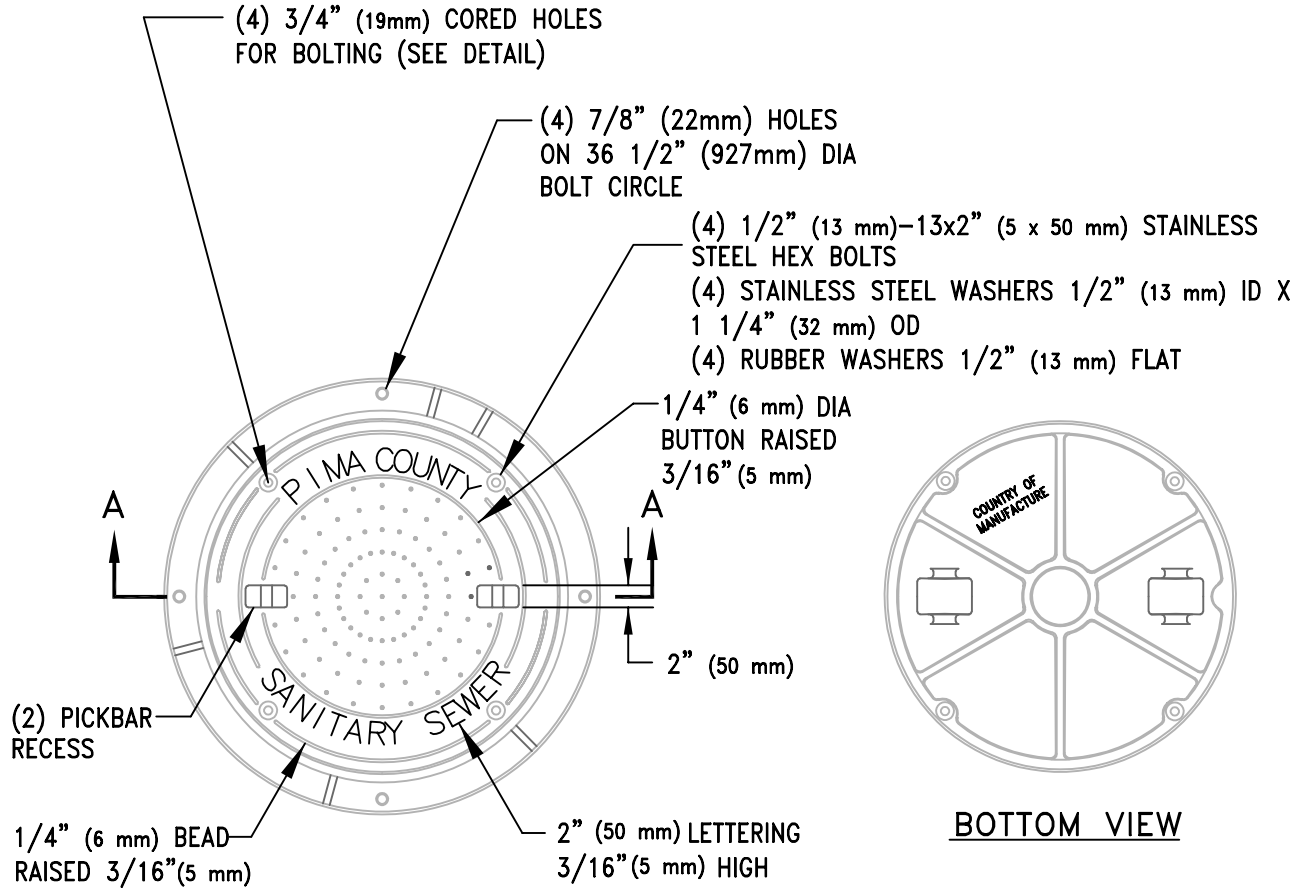

FRAME AND COVER – PLAN VIEW

BOTTOM VIEW

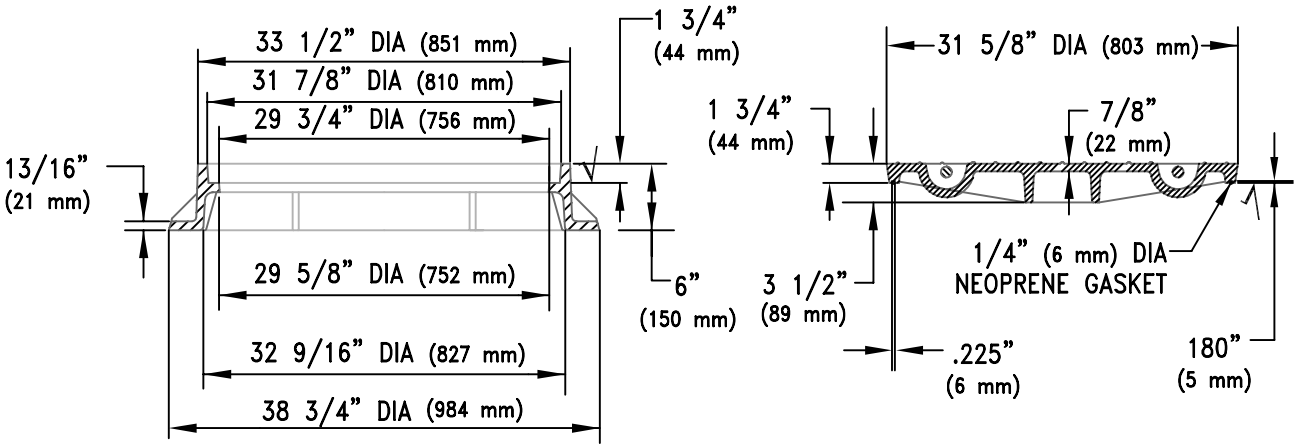

FRAME SECTION A–A

COVER SECTION

√ DENOTES MACHINED SURFACE

ISSUED:		STANDARD DETAIL		DETAIL NO.
8/92		30" (760 mm) BOLTED WATERPROOF MANHOLE FRAME AND COVER		WWM 214.2
REVISED:				
7/02				SHEET 1 OF 2

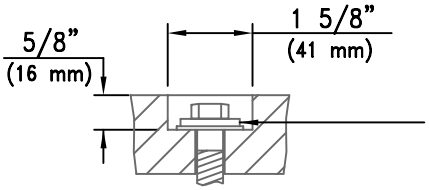

STAINLESS STEEL HEX BOLTS 1/2" (13 mm) – 13x2" (5x50 mm) BOLTS
STAINLESS STEEL WASHER 1/2" (13 mm) I.D. X 1 1/4" (32 mm) O.D.
RUBBER WASHER 1/2" (13 mm) FLAT

BOLT HOLE DETAIL

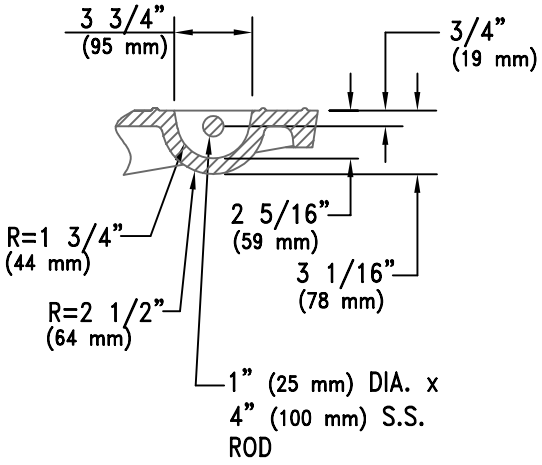

PICKBAR RECESS DETAIL

NOTES:

1. REFER TO GENERAL NOTES, STD. DET. WWM 213.0.
2. DETAIL FOR MANHOLES OF MAINS OF 27" (675 mm) DIAMETER OR LARGER.
3. THE COVER SHALL HAVE RECESSES FOR PICKBARS. VENT HOLES SHALL NOT BE PROVIDED.
4. FRAME WEIGHT 200 LBS. (91 Kg) (APPROX.).
5. COVER WEIGHT 217 LBS. (98 Kg) (APPROX.).

ISSUED:		STANDARD DETAIL		DETAIL NO.
8/92	CITY OF TUCSON FOUNDED 1776	30" (760 mm) BOLTED WATERPROOF MANHOLE FRAME AND COVER	THE SEAL of PIMA COUNTY ARIZONA	WWM 214.2
REVISED: 7/02				SHEET 2 OF 2

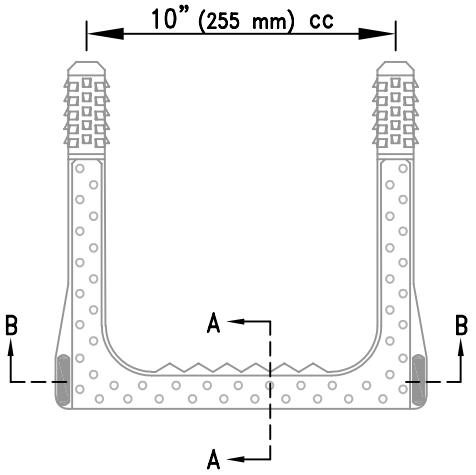

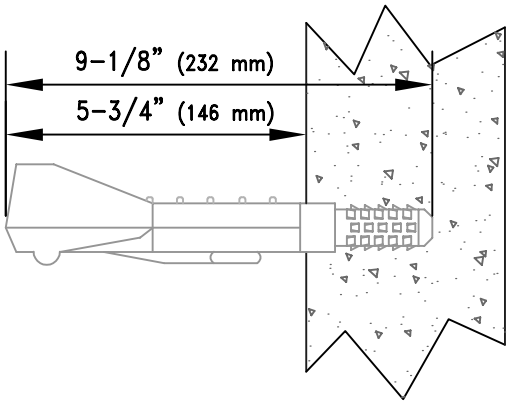

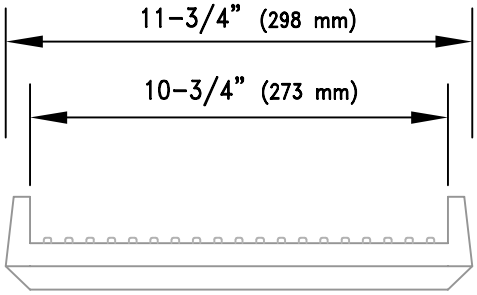

SECTION B-B

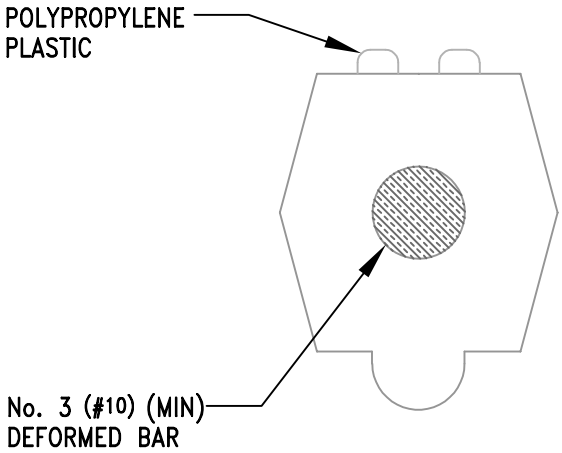

SECTION A-A

NOTES:

1. STEPS FOR PRECAST CONCRETE MANHOLES SHALL BE OF STEEL REINFORCED POLYPROPYLENE; M.A. INDUSTRIES INC., NO. PS-IPF, LANE INTERNATIONAL CORP. P-10938, NEXTEP MWT288 OR APPROVED EQUAL.
2. STEPS SHALL BE LOCATED AS FOLLOWS: UPPERMOST STEP SHALL BE NO MORE THAN 2'-2" (660 mm) BELOW TOP OF MANHOLE COVER; INTERMEDIATE STEPS SHALL BE SPACED AT 1'-0" (305 mm) MIN., 1'-3" (380 mm) MAX CENTER TO CENTER. THE BOTTOM STEP SHALL BE NO MORE THAN 1'-6" (455 mm) ABOVE THE FINISHED MANHOLE BASE.
3. STEPS TO BE DRIVEN INTO PRE-FORMED HOLES IN PRECAST CONCRETE MANHOLE SECTIONS BY THE MANHOLE MANUFACTURER PRIOR TO DELIVERY TO THE JOB SITE.
4. ALL STEPS WITHIN A MANHOLE SHALL BE OF THE SAME DESIGN, TYPE AND SIZE. (MIXING OF UNMATCHED STEPS WITHIN THE SAME MANHOLE IS NOT PERMITTED).
5. ALL STEPS WITHIN A MANHOLE SHALL BE ALIGNED VERTICALLY.
6. STEPS CAN BE USED FOR CAST IN PLACE REINFORCED CONCRETE JUNCTION BOXES.
7. LOOSE STEPS SHALL BE CAUSE FOR REJECTION OF THAT MANHOLE SECTION.

ISSUED:		STANDARD DETAIL		DETAIL NO.
2/93	CITY OF TUCSON FOUNDED 1776	MANHOLE STEP TYPE I	THE SEAL of PIMA COUNTY ARIZONA	WWM 216
REVISED: 7/02				SHEET 1 OF 1

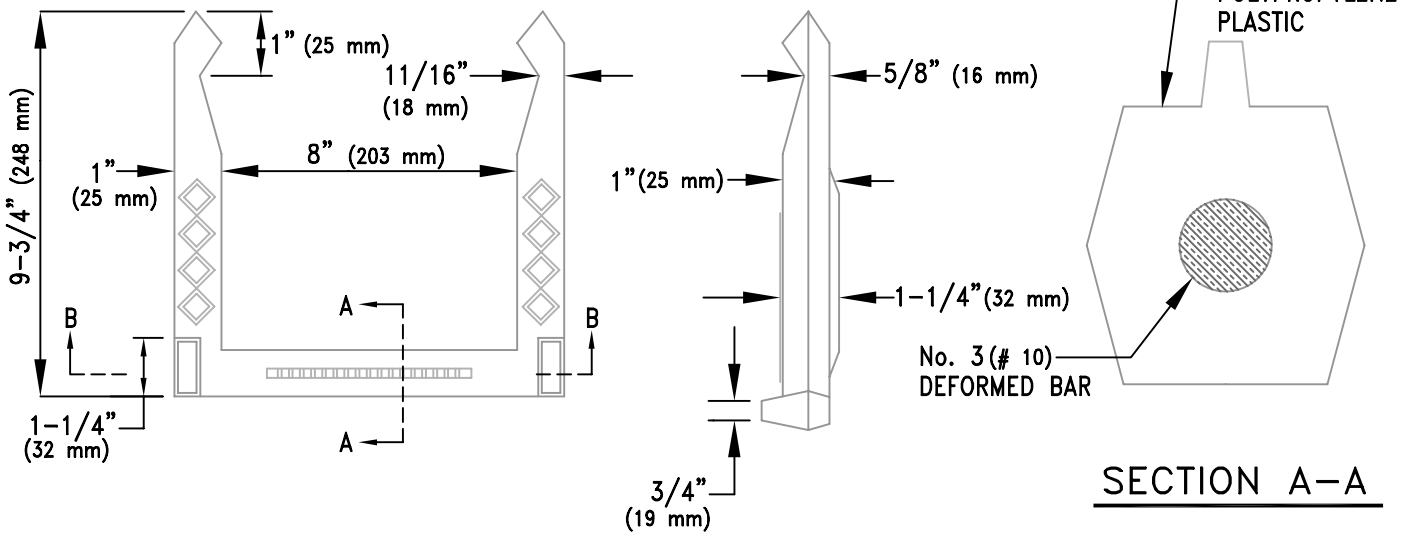

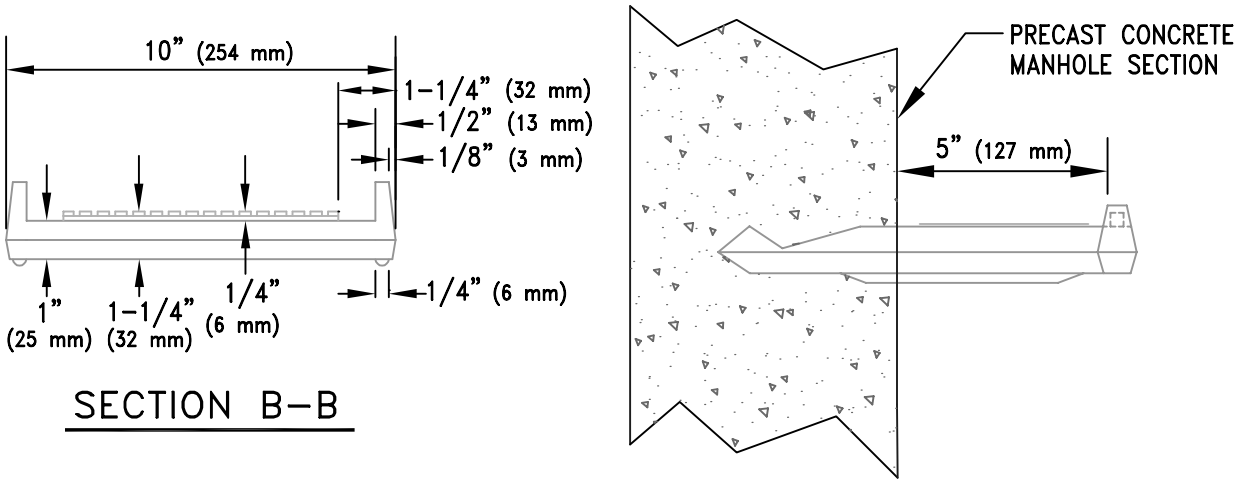

NOTES:

1. STEPS FOR MANHOLES SHALL BE OF STEEL REINFORCED POLYPROPYLENE PLASTIC, M.A. INDUSTRIES, INC., NO. PS-3 OR AN APPROVED EQUAL.
2. STEPS SHALL BE LOCATED AS FOLLOWS: UPPERMOST STEP SHALL BE NO MORE THAN 2'-2" (660 mm) BELOW TOP OF MANHOLE COVER; INTERMEDIATE STEPS SHALL BE SPACED AT 1'-0" (305 mm) MIN., 1'-3" (380 mm) MAX CENTER TO CENTER. THE BOTTOM STEP SHALL BE NO MORE THAN 1'-6" (455 mm) ABOVE THE FINISHED MANHOLE BASE.
3. STEPS FOR PRECAST CONCRETE MANHOLES SHALL BE CAST INTO THE CONCRETE WALL DURING MANUFACTURE OR MORTARED, WITH NON-SHRINK GROUT, INTO HOLES AFTER CONCRETE HAS SET, AND PRIOR TO DELIVERY TO THE JOB SITE.
4. ALL STEPS WITHIN A MANHOLE SHALL BE OF THE SAME DESIGN, TYPE AND SIZE.
5. ALL STEPS WITHIN EACH MANHOLE SHALL BE ALIGNED VERTICALLY.
6. STEPS CAN BE USED FOR CAST IN PLACE REINFORCED CONCRETE JUNCTION BOXES.
7. LOOSE STEPS SHALL BE CAUSE FOR REJECTION OF THAT MANHOLE SECTION.

ISSUED:		STANDARD DETAIL		DETAIL NO.
8/92	CITY OF TUCSON FOUNDED 1776	MANHOLE STEP TYPE 2	THE SEAL of PIMA COUNTY ARIZONA	WWM 217
REVISED: 7/02				SHEET 1 OF 1

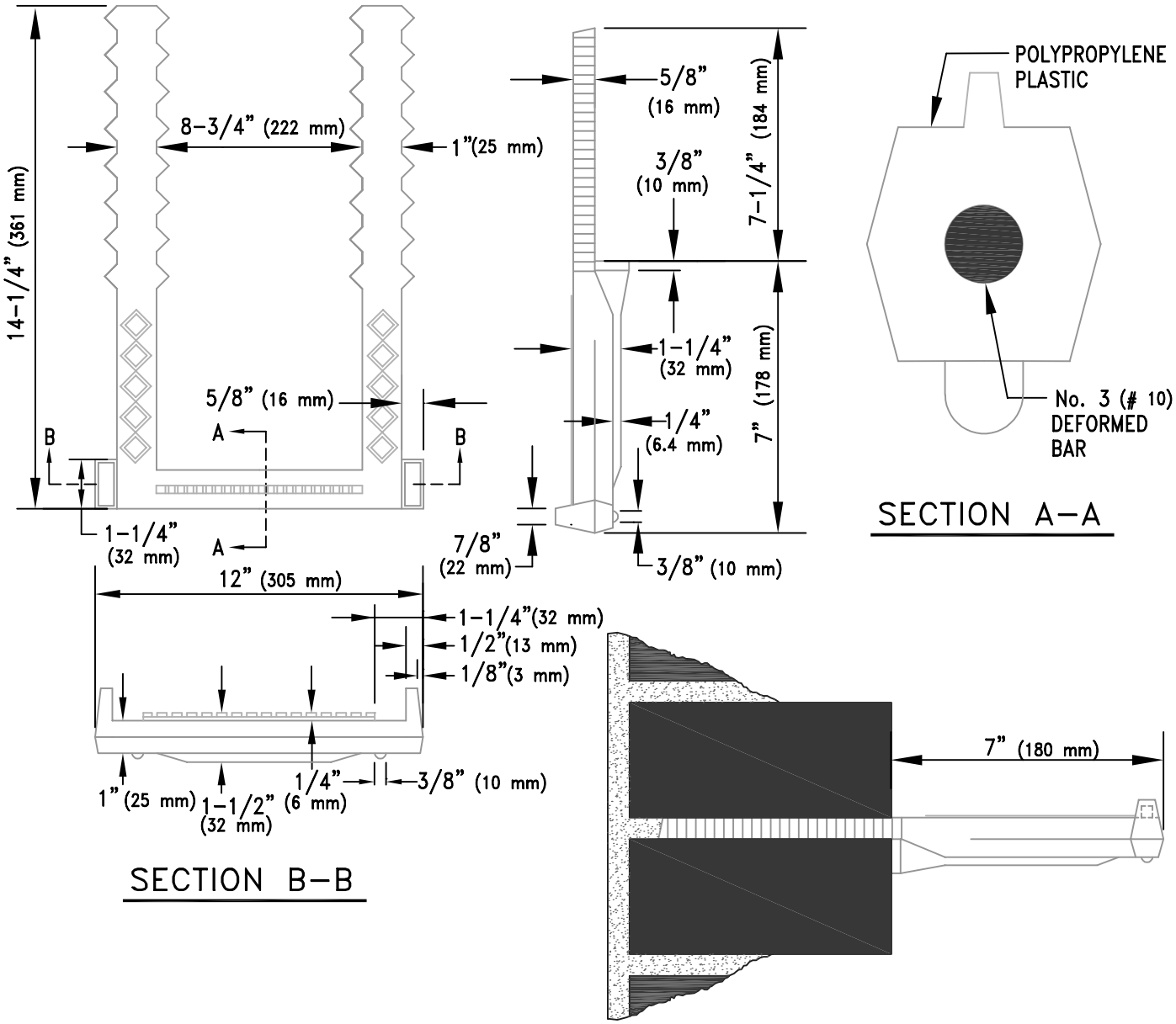

NOTES:

1. STEPS FOR BRICK MANHOLES SHALL BE OF STEEL REINFORCED POLYPROPYLENE PLASTIC, M.A. INDUSTRIES, INC., NO. PS-1B OR AN APPROVED EQUAL.

2. STEPS SHALL BE LOCATED AS FOLLOWS: UPPERMOST STEP SHALL BE NO MORE THAN 2'-2" (660 mm) BELOW TOP OF MANHOLE COVER; INTERMEDIATE STEPS SHALL BE SPACED AT 1'-0" (305 mm) MIN., 1'-3" (380 mm) MAX CENTER TO CENTER. THE BOTTOM STEP SHALL BE NO MORE THAN 1'-6" (455 mm) ABOVE THE FINISHED MANHOLE BASE.

3. STEPS SHALL BE INSTALLED IN MORTAR JOINT OF BRICK MANHOLE.

4. ALL STEPS WITHIN A MANHOLE SHALL BE OF THE SAME DESIGN, TYPE AND SIZE. (MIXING OF UNMATCHED STEPS WITHIN THE SAME MANHOLE IS NOT PERMITTED).

5. ALL STEPS WITHIN A MANHOLE SHALL BE ALIGNED VERTICALLY.

6. LOOSE STEPS SHALL BE CAUSE FOR REJECTION OF THE MANHOLE.

ISSUED:		STANDARD DETAIL		DETAIL NO.
8/92	CITY OF TUCSON FOUNDED 1776	MANHOLE STEP TYPE 3	THE SEAL of PIMA COUNTY ARIZONA	WWM 218
REVISED: 7/02				SHEET 1 OF 1

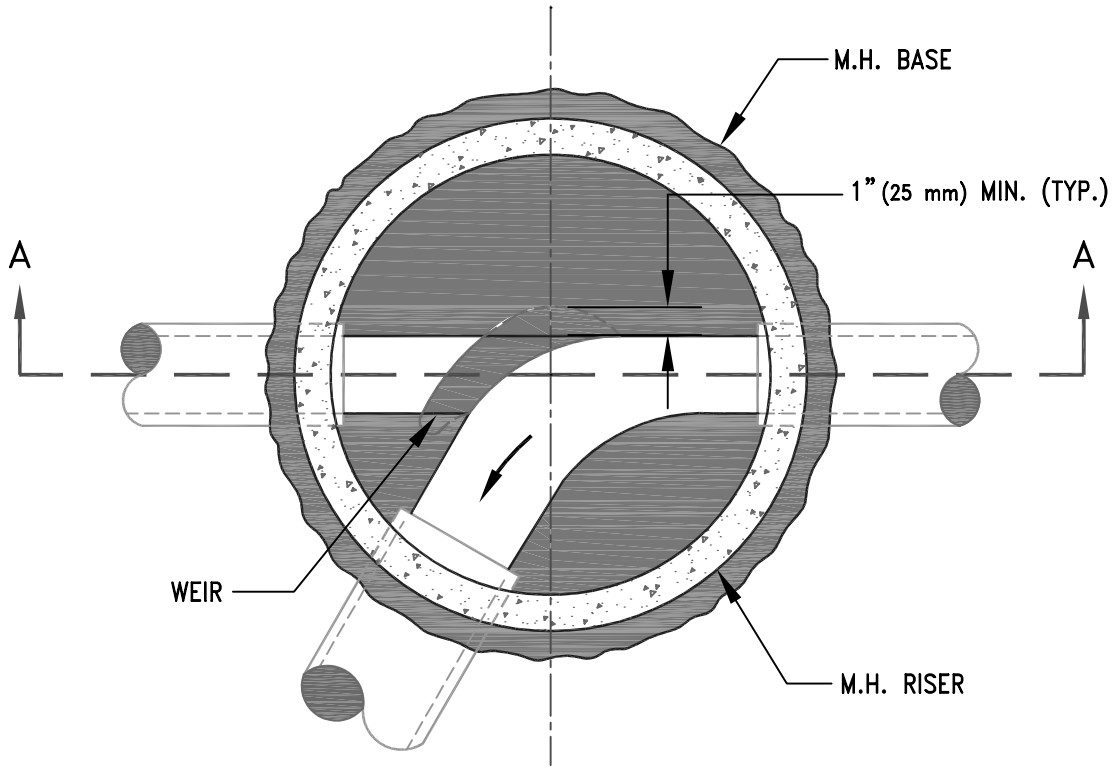

PLAN VIEW

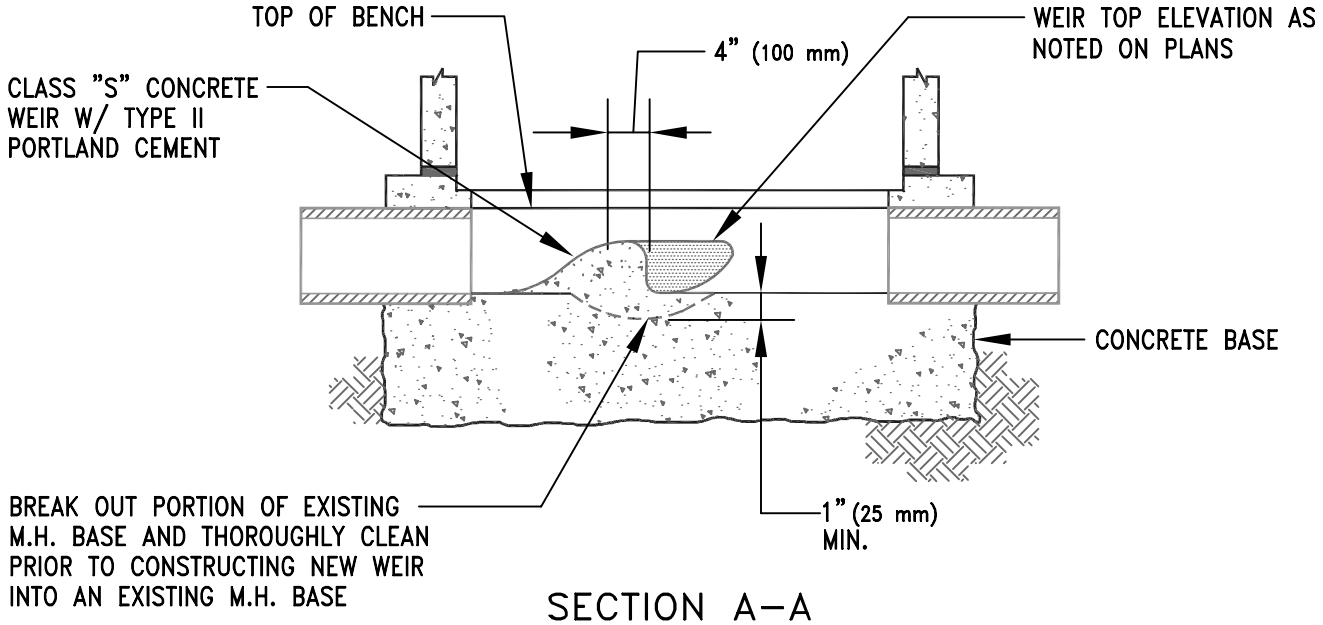

SECTION A–A

ISSUED:		STANDARD DETAIL		DETAIL NO.
8/92		CONCRETE WEIR		WWM 219
REVISED:				
7/02				SHEET 1 OF 1

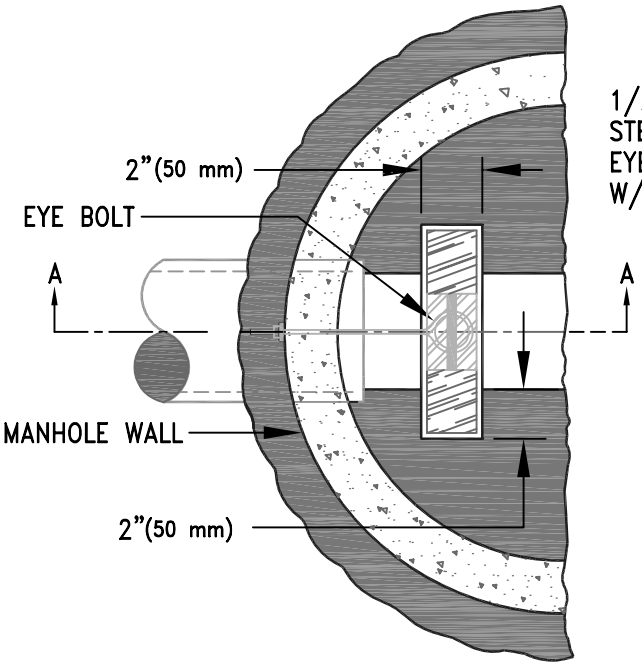

DETAIL

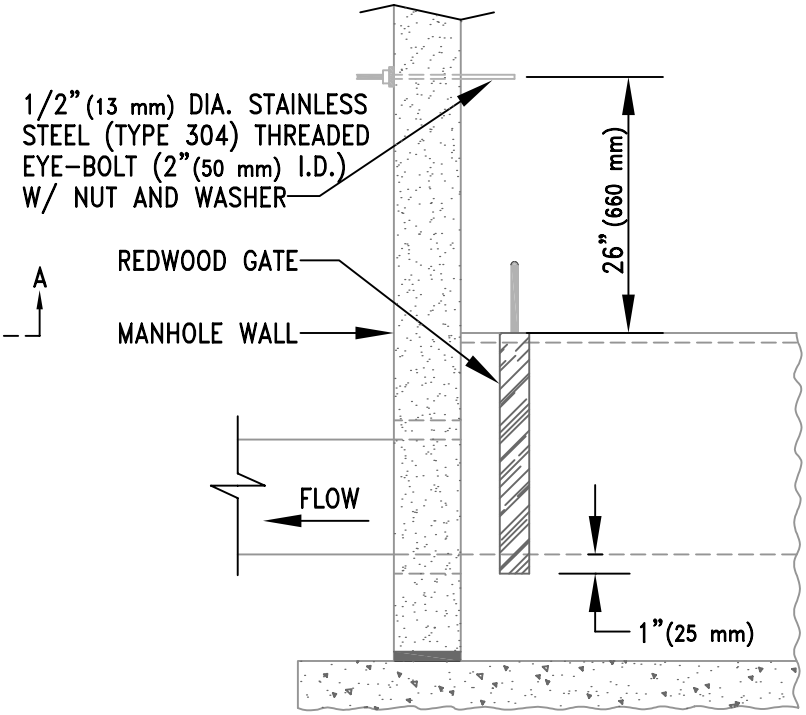

SECTION A–A

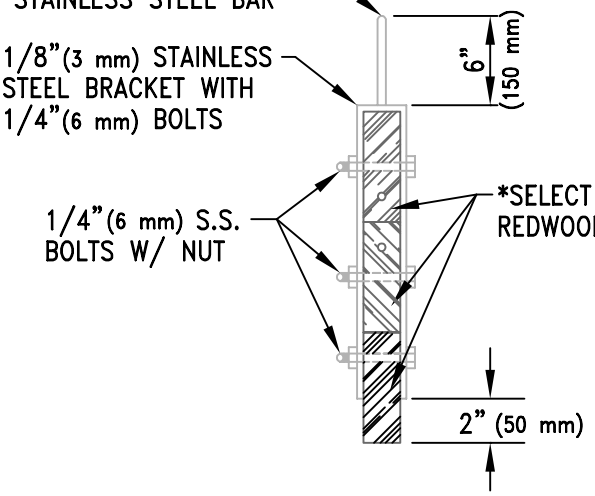

SIDE VIEW OF GATE

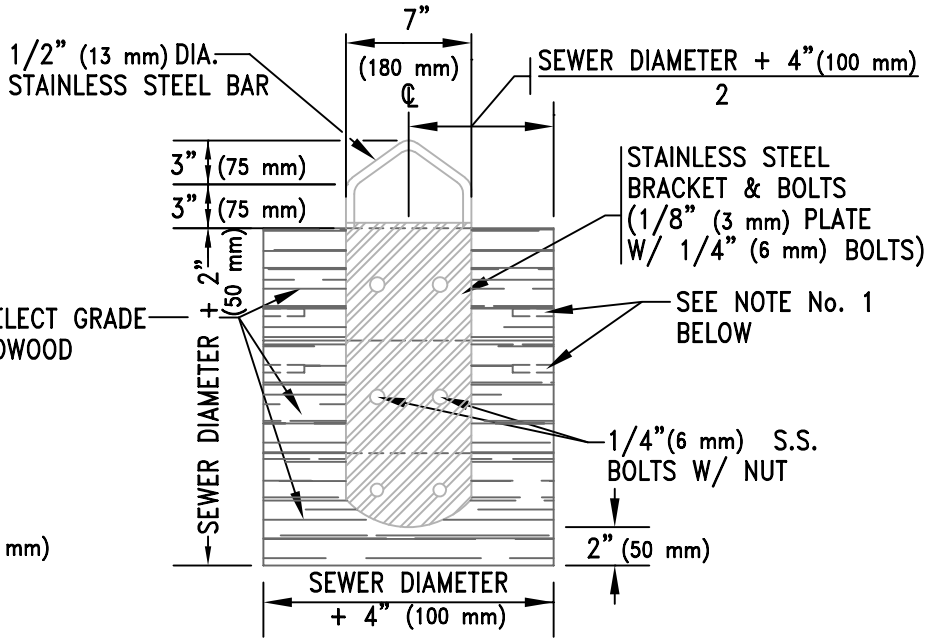

BACK VIEW OF GATE

* SELECT GRADE 2"(50 mm) X 6"(150 mm) REDWOOD BOARDS – ROUGH CUT

ISSUED:		STANDARD DETAIL		DETAIL NO.
8/92	CITY OF TUCSON	REDWOOD GATE DETAIL	THE SEAL of PIMA COUNTY ARIZONA	WWM 220
REVISED: 7/02				SHEET 1 OF 1

NOTE:

1. DRILL HOLES, BOTH SIDES, 1/2" (13 mm) DIA. BY 2" (50 mm) DEEP FOR INSERTION OF 3/8" (10 mm) DIA. BY 6" (150 mm) LONG STAINLESS STEEL BOLTS. LOCATE BOLT HOLES TO HOLD GATE IN A POSITION WHICH WILL ALLOW FLOW UNDER GATE OF 1/4 PIPE DIA. AND 1/2 PIPE DIA. CONTRACTOR TO SUPPLY TWO BOLTS PER GATE.

2. MAXIMUM DIAMETER OF MAINLINE FOR WHICH A REDWOOD GATE CAN BE USED IS 15" (375 mm). THE USE OF REDWOOD GATE ON LARGER DIAMETER SEWERS WILL REQUIRE SPECIAL APPROVAL BY PCWMD.

3. REDWOOD GATE SHALL BE LOCATED AS FAR FROM THE WALL AND AS CLOSE TO THE EDGE OF THE MANHOLE CHANNEL AS POSSIBLE.

4. A SHOP DRAWING SUBMITTAL SHALL BE MADE TO OPTIMIZE THE LOCATION OF THE GATE.

ISSUED:		STANDARD DETAIL		DETAIL NO.
8/92	CITY OF TUCSON FOUNDED 1776	REDWOOD GATE DETAIL	THE SEAL of PIMA COUNTY ARIZONA	WWM 220.1
REVISED: 7/02				SHEET 1 OF 1

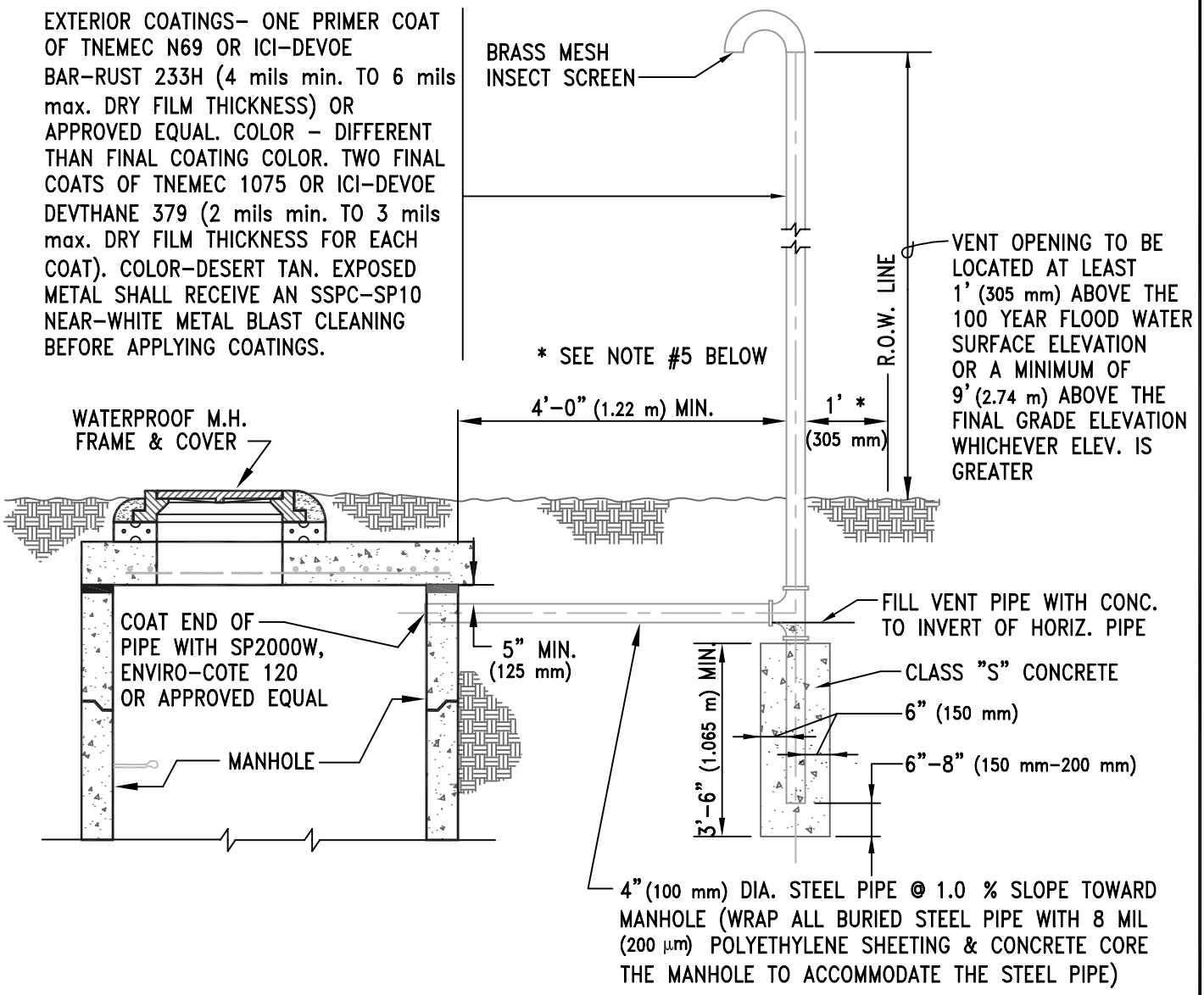

NOTES:

1. WATERPROOF COVERS SHALL BE USED AT ALL MANHOLE LOCATIONS WITHIN IN A 100 YEAR FLOOD PLAIN AREA.
2. MANHOLE VENTS ARE REQUIRED AT EVERY OTHER MANHOLE IF THE MANHOLE SPACING IS EQUAL TO OR LESS THAN 500 FEET (152 m).
3. MANHOLE VENTS ARE REQUIRED AT EVERY MANHOLE IF THE MANHOLE SPACING IS GREATER THAN 500 FEET (152 m).
4. ALL STEEL PIPE, EXCEPT THAT PORTION WHICH IS FILLED WITH CONCRETE, SHALL HAVE A 40 MIL (1mm) SP2000W, ENVIRO-COTE 120, OR APPROVED EQUAL INTERIOR LINING IN ACCORDANCE WITH SECTION 509 OF THE STANDARD SPECIFICATIONS OR AS SPECIFIED BY THE SPECIAL PROVISIONS.
5. FOR SEWER LINES LOCATED WITHIN A ROAD RIGHT OF WAY, THE VENT PIPE SHALL BE LOCATED ONE (1) FOOT (305 mm) INSIDE THE RIGHT OF WAY LINE. TYPE 'A' POST BARRICADES, PER STD. DET. 106, SHALL BE LOCATED ON EITHER SIDE OF THE VENT PIPE.

ISSUED:		STANDARD DETAIL		DETAIL NO.
8/92	CITY OF TUCSON FOUNDED 1776	MANHOLE VENT ASSEMBLY DETAIL	THE SEAL OF PIMA COUNTY ARIZONA	WWM 221.1
REVISED: 7/02				SHEET 1 OF 1

EXTERIOR COATINGS: ONE PRIMER COAT OF TNEMEC 104-1255, 8 MILS(200 μm) MIN. DRY FILM THICKNESS OR APPROVED EQUAL AND TWO FINAL COATS OF TNEMEC 71-AJ62, 2 MILS(50 μm) MIN. DRY FILM THICKNESS FOR EACH COAT OR APPROVED EQUAL. EXPOSED METAL SHALL RECEIVE AN SSPC-SP10 NEAR-WHITE METAL BLAST CLEANING BEFORE APPLYING COATINGS

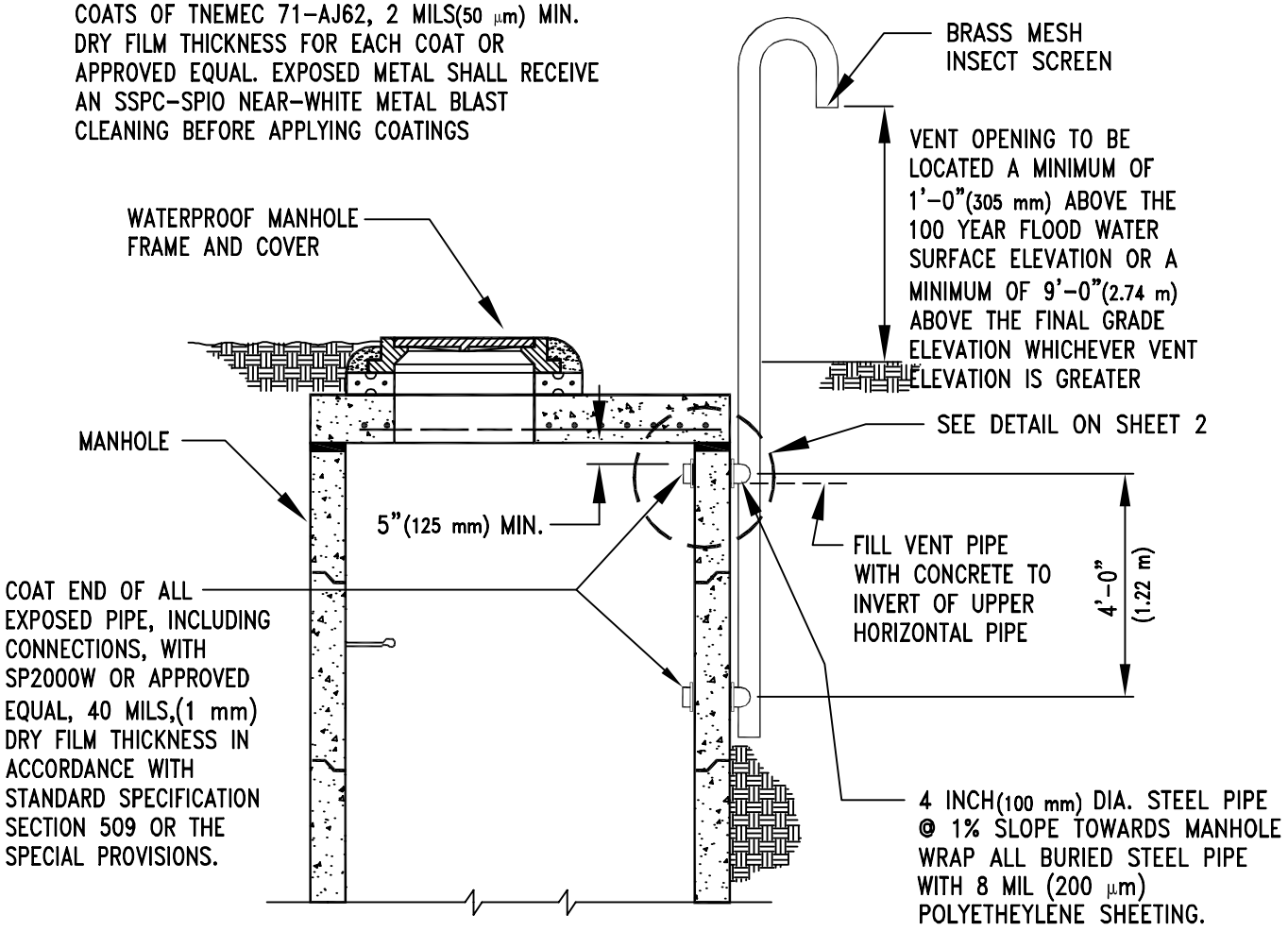

NOTES:

1. ALL STRUCTURAL SHAPES AND PLATES SHALL BE ASTM A-36 (A-36M).
   ALL STRUCTURAL SQUARE TUBE SHAPES SHALL BE ASTM A-500 GRADE B.
   ALL PIPE STEEL SHALL BE ASTM A-501 OR ASTM A53 TYPE E OR S, GR. B.

2. ALL STEEL PIPE (EXCEPT THE PORTION FILLED WITH CONCRETE) SHALL HAVE A 40 MIL(1 mm) DRY FILM THICKNESS SP2000W INTERIOR LINING. THE LINING SHALL MEET PCWMD SPECIFICATIONS.

3. NOTES 1 - 3 FROM STANDARD DETAIL WWM 221 APPLY.

ISSUED:		STANDARD DETAIL		DETAIL NO.
8/92	CITY OF TUCSON FOUNDED 1776	MODIFIED MANHOLE VENT ASSEMBLY	THE SEAL of PIMA COUNTY ARIZONA	WWM 221.2
REVISED: 7/02				SHEET 1 OF 2

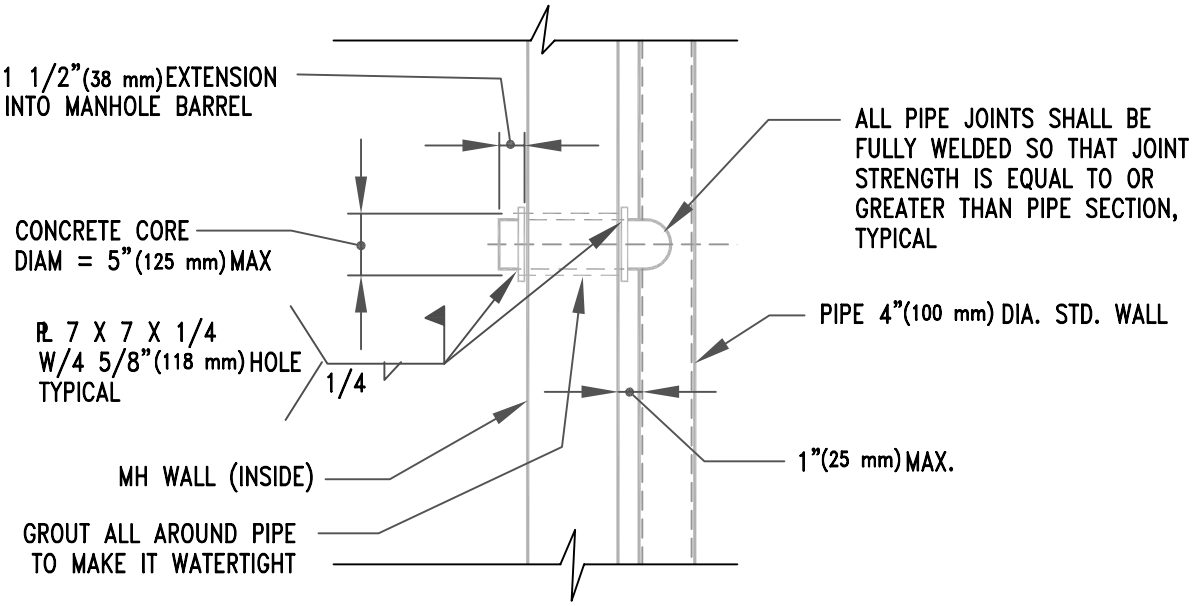

TYPICAL PIPE TO MANHOLE CONNECTION

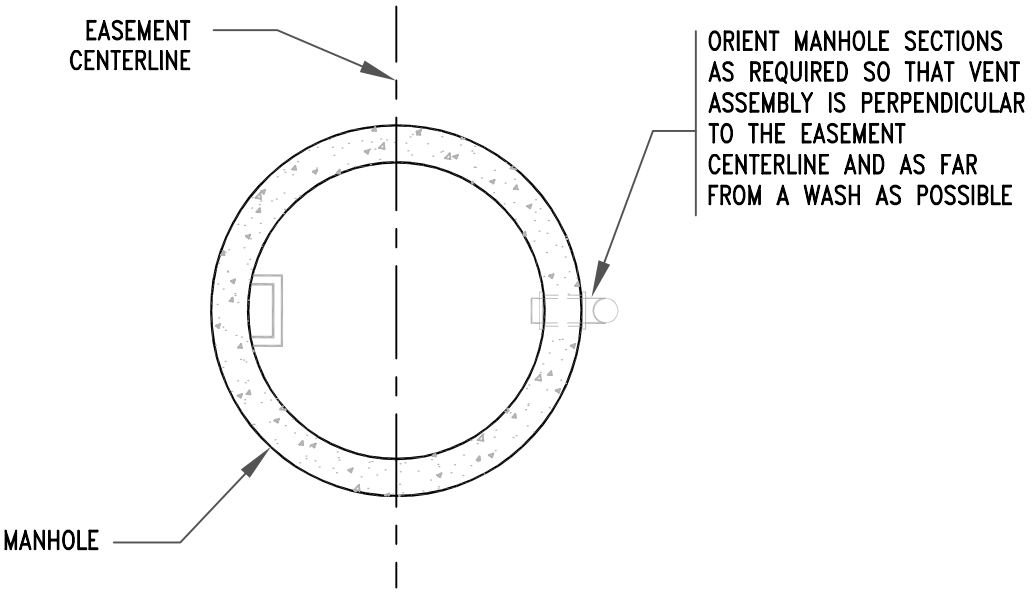

VENT ASSEMBLY ORIENTATION

ISSUED:		STANDARD DETAIL		DETAIL NO.
8/92	CITY OF TUCSON FOUNDED 1776	MODIFIED MANHOLE VENT ASSEMBLY	THE SEAL of PIMA COUNTY ARIZONA	WWM 221.2
REVISED: 7/02				SHEET 2 OF 2

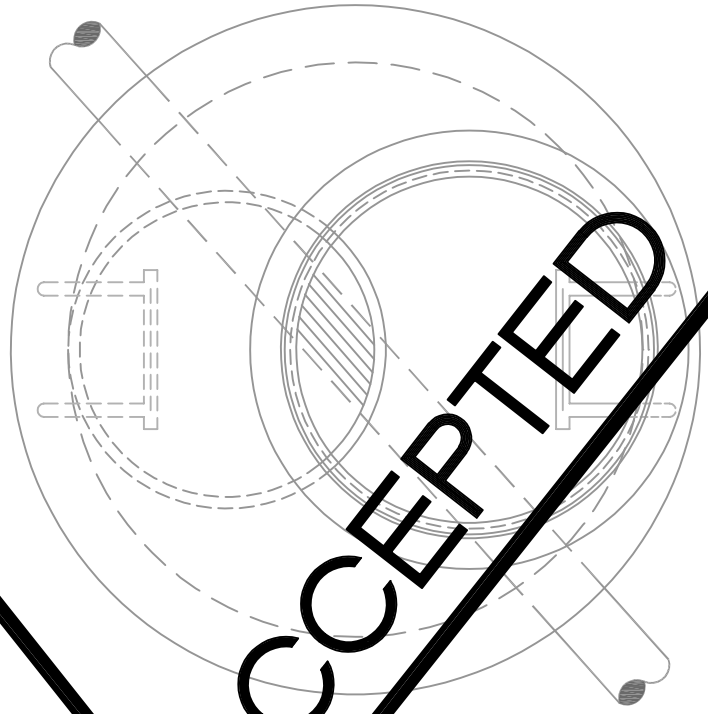

NOTE:
A MANHOLE SAFETY LANDING SHALL BE PLACED MID-WAY BETWEEN THE TOP OF THE BENCH AND THE TOP OF THE FRAME AND COVER IN MANHOLES EXCEEDING 25 FEET (7.6 m) IN DEPTH.

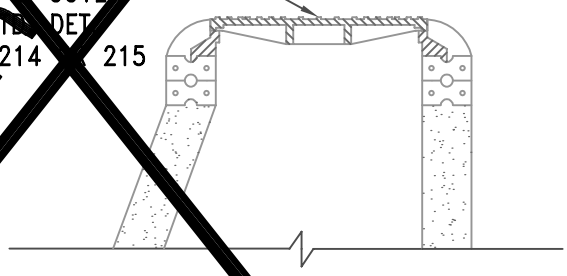

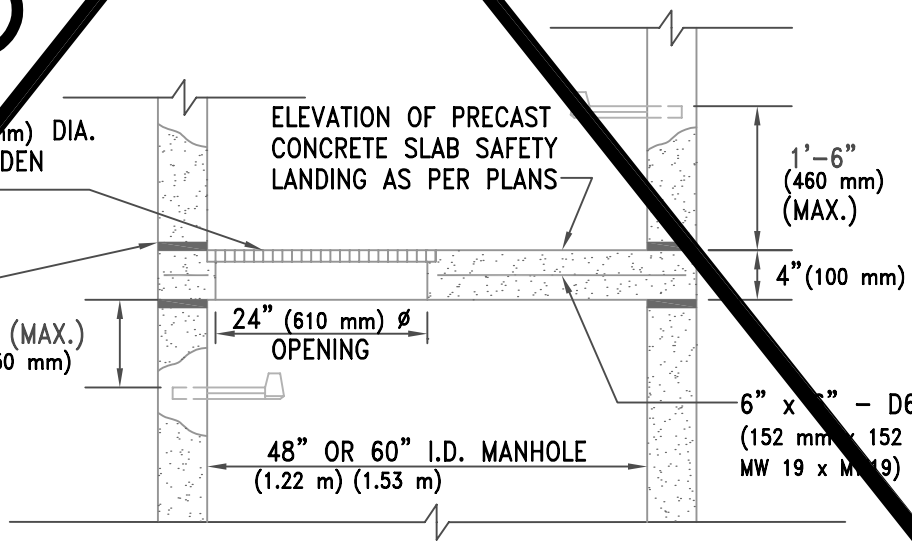

* SHOP DRAWINGS REQUIRED

NO LONGER ACCEPTED

ISSUED:		STANDARD DETAIL		DETAIL NO.
8/92	CITY OF TUCSON ARIZONA	PRECAST CONCRETE MANHOLE SAFETY LANDING	THE SEAL of PIMA COUNTY ARIZONA	WM 222
DELETED 7/02				SHEET 1 OF 1

DET222.DWG 10/29/01 11:53

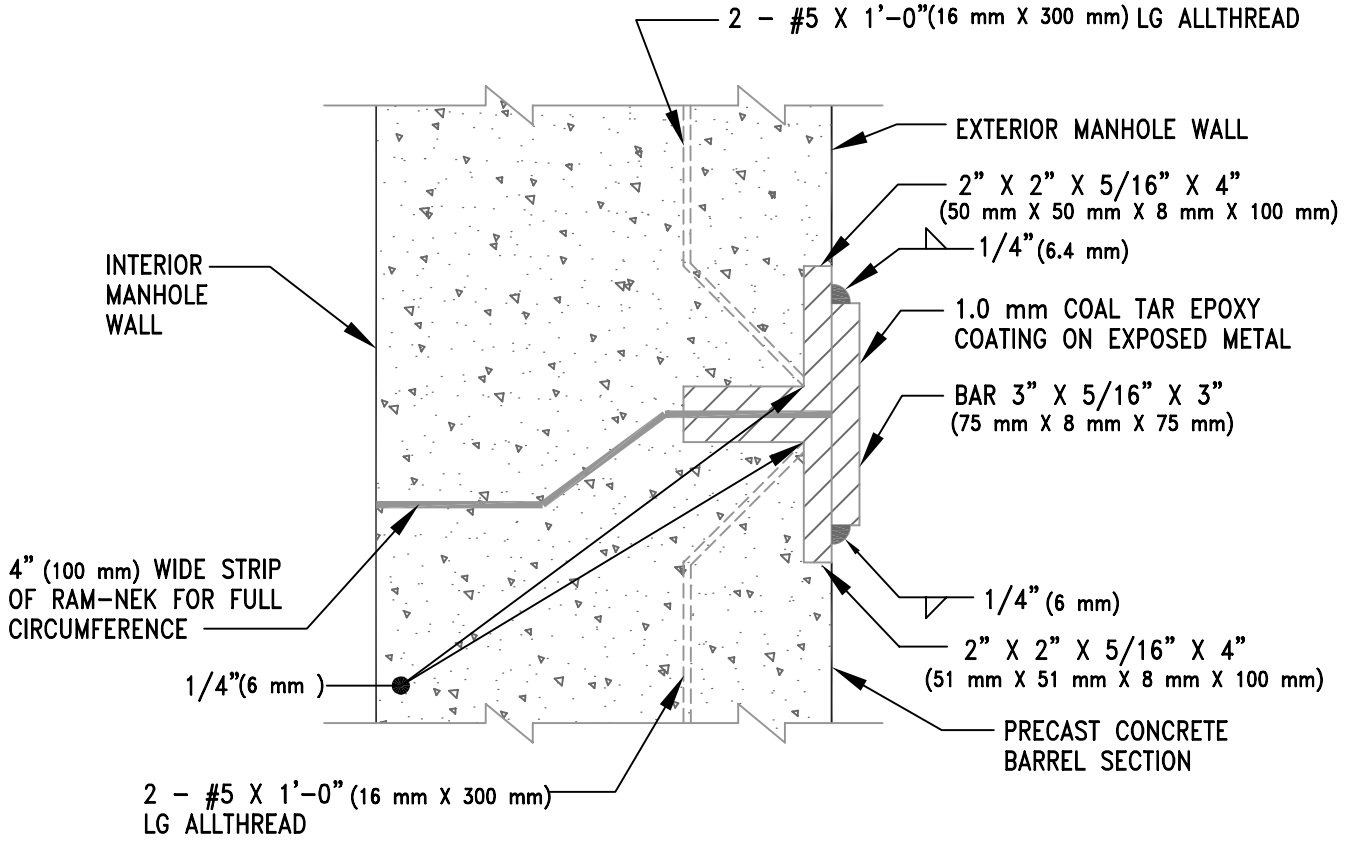

NOTES:

1. PROVIDE POSITIVE JOINT REINFORCEMENT AT THE UPSTREAM WASH FACE AND AT 90° INTERVALS AROUND THE CIRCUMFERENCE OF THE MANHOLE FROM THE UPSTREAM FACE. JOINT REINFORCEMENT SHALL BE USED ON ALL MANHOLE SECTION–TO–SECTION, SECTION–TO–GRADE RINGS, AND GRADE RINGS–TO–GRADE RING JOINTS AS DETAILED. ALL SECTIONS SHALL BE SECURED. JOINT REINFORCEMENT SHALL BE USED TO SECURE THE BOTTOM MANHOLE SECTION TO THE MANHOLE BASE.

2. FIELD WELD THE JOINT REINFORCEMENT AS INDICATED ON THE EXTERIOR OF THE BARREL SECTION AND COAT ALL EXPOSED METAL WITH A 4 MIL(100 μm) COAL TAR EPOXY DRY FILM THICKNESS.

3. THE COSTS OF PROVIDING AND INSTALLING THE JOINT REINFORCEMENT SHALL BE CONSIDERED INCIDENTAL TO AND INCLUDED IN THE UNIT PRICE BID FOR THE MANHOLE.

4. ALL WELDS SHALL BE IMMEDIATELY QUENCHED WITH TEN WEIGHT (10W) MOTOR OIL AFTER EACH WELD IS COMPLETED.

5. THE ALLTHREAD SHALL BE 5/8"(16 mm), GRADE 2, NON–GALVANIZED, COARSE.

ISSUED:		STANDARD DETAIL		DETAIL NO.
8/92	CITY OF TUCSON FOUNDED 1776	MANHOLE JOINT REINFORCEMENT	THE SEAL of PIMA COUNTY ARIZONA	WWM 223
REVISED: 7/02				SHEET 1 OF 1

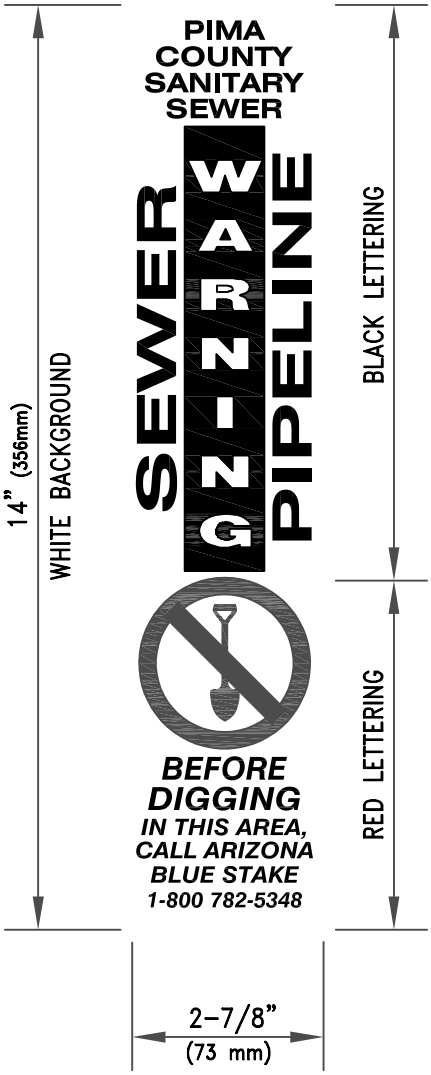

MARKER DECAL

NOTES:

1. THE CONTRACTOR SHALL FURNISH AND INSTALL SEWER LINE MARKERS PER THE PLANS AND MANUFACTURER'S SPECIFICATIONS AT EACH MANHOLE LOCATION WHERE THE MANHOLE IS LOCATED OUTSIDE THE PAVED AREA OR WHERE THE CONSTRUCTION PLANS CALL FOR A SEWER LINE MARKER.

2. MARKERS SHALL BE INSTALLED 10 FEET (3 m) TO THE RIGHT AS YOU LOOK DOWNSTREAM ALONG THE SEWER LINE, OR ON THE EDGE OF THE SEWER EASEMENT IF 10 FEET (3 m) IS NOT AVAILABLE. IN ANY CASE, THE MARKER IS TO BE NO CLOSER THAN 10 FEET (3 m) FROM THE EDGE OF STRIP PAVEMENT OR 1 FOOT (300 mm) FROM THE FACE OF CURB. FOR LOCATIONS THAT DO NOT FIT THESE CONDITIONS, SPECIFIC INSTRUCTIONS SHALL BE OBTAINED FROM THE ENGINEER.

3. THE MARKERS SHALL BE UV-STABILIZED POLYPROPYLENE "SENTRY POSTS" AS MANUFACTURED BY REPNET INC. (1-800-522-4343) OR APPROVED EQUAL. THE MARKERS SHALL BE TUBULAR IN SHAPE, 4 FEET (1.2 m) HIGH ABOVE GROUND AFTER INSTALLATION AND APPROXIMATELY 2-1/2 INCHES (64 mm) IN DIAMETER, EXCEPT AT THE UPPER 11 TO 14 INCHES (280 mm TO 360 mm). THE TOP SHALL BE FLATTENED TO AN OVAL SHAPE AT LEAST 3 INCHES (75 mm) IN WIDTH AND ABOUT 1 INCH (25 mm) AT THE MINOR AXIS. THE TOP SHALL BE CAPPED SO AS TO BE WATER-RESISTANT. THE MARKERS SHALL BE REBOUNDABLE FOR THE LIFE OF MARKER. MARKERS SHALL BE GREEN IN COLOR.

4. MARKERS SHALL BE FOR USE WITH A CHISEL-POINTED, DRIVEABLE, REUSABLE, GALVANIZED, 18-INCH (460 mm) METAL SOIL ANCHOR, INTO WHICH THE MARKER IS INSERTED AND HELD IN PLACE BY A LOCKING MECHANISM. SOIL ANCHORS SHALL BE DRIVEN UNTIL FLUSH WITH GRADE LEVEL. A PURPOSE-BUILT DRIVER SHALL BE USED FOR INSTALLATION TO AVOID DAMAGE TO THE SOIL ANCHOR.

5. EACH MARKER SHALL BE INSTALLED WITH TWO WARNING MESSAGE DECALS, ONE PER EACH SIDE OF THE TOP FLATTENED OVAL SHAPE. DECALS SHALL BE AS THE STANDARD REPNET SD-1040 DECAL FOR SEWER PIPELINES, OR APPROVED EQUAL, WITH THE SPECIFIC MARKING INFORMATION SHOWN ON THE DRAWING TO THE LEFT OF THIS NOTE. DECALS SHALL BE MANUFACTURED OF PREMIUM-GRADE VINYL AND PRINTED WITH UV-RESISTANT INKS AND CLEAR-COATED WITH UV-BLOCKING INK. DECAL ADHESIVE SHALL BE PEEL- AND UV-RESISTANT.

6. FOR LOCATIONS WHERE THE MANHOLE MAY BE OBSCURED FROM THE MARKER, SUCH AS HEAVILY OVERGROWN AREAS, A SECOND DECAL SHALL BE PLACED ON BOTH SIDES OF THE MARKER, NO MORE THAN 6 INCHES (150 mm) BELOW EACH WARNING DECAL. THIS DECAL SHALL SHOW A BLACK DIRECTIONAL ARROW ON A WHITEBACKGROUND AND BE ABOUT 2 INCHES (50 mm) HIGH BY 3 INCHES (75 mm) WIDE. ARROW DECALS SHALL BE INSTALLED AFTER MARKER INSTALLATION TO POINT IN THE DIRECTION OF THE INDICATED MANHOLES. ARROW DECAL MATERIALS SHALL BE IDENTICAL TO THOSE USED IN THE WARNING DECALS.

ISSUED:		STANDARD DETAIL		DETAIL NO.
8/92	CITY OF TUCSON FOUNDED 1776	SEWER MARKER	THE SEAL of PIMA COUNTY ARIZONA	WWM 224
REVISED: 7/02				SHEET 1 OF 1

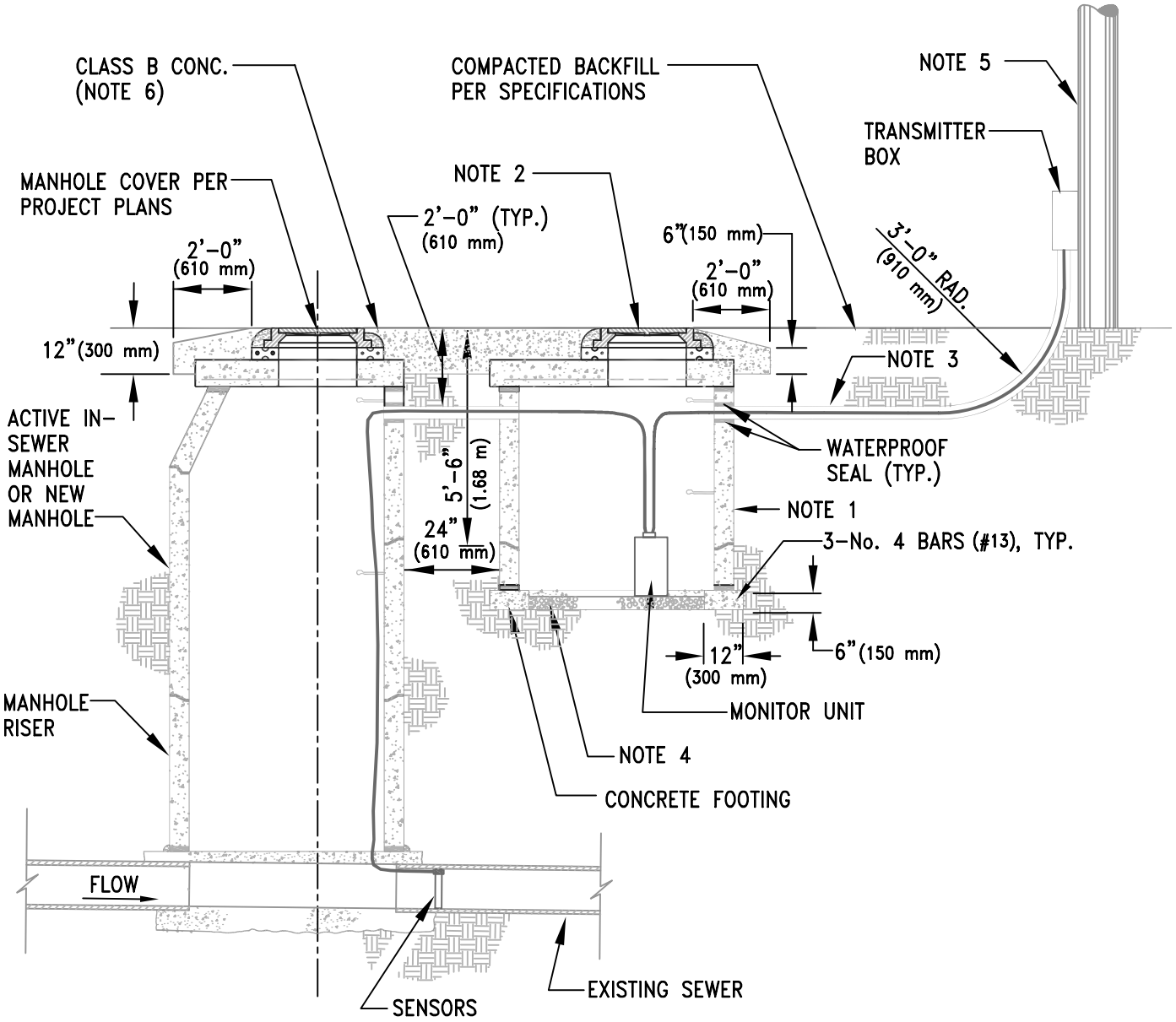

ISSUED:		STANDARD DETAIL		DETAIL NO.
8/92		MONITORING STATION		WWM 225
REVISED:				
7/02				SHEET 1 OF 2

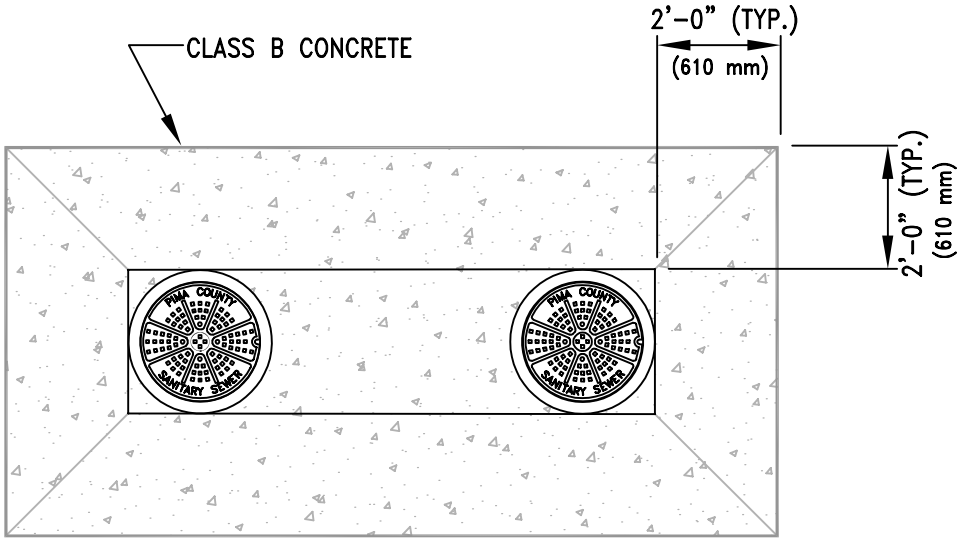

PLAN VIEW
CONCRETE COLLAR

NOTES:

1. REMOTE MONITORING STATION EQUIPMENT MANHOLE 4'-0" (1.22 M) HIGH, 4'-0" (1.22 m) DIAMETER MANHOLE CONE SECTION, PER STD. DET. WWM 208.

2. NEW REMOTE MONITORING STATION MANHOLE, STANDARD 24" (610 mm) DIAMETER FRAME AND COVER, PER STD. DET. WWM 213.

3. 4" (100 mm) DIAMETER PVC PIPE, SCHEDULE 40 U.L., TYPICAL.

4. 4" (100 mm) THICK #57 CRUSHED STONE, PER ASTM C 33.

5. RISER POLE. COORDINATE WITH UTILITY COMPANY FOR LOCATION IF AN EXISTING POLE IS TO BE USED. IF A RADIO TRANSMITTER IS TO BE USED, AN ANTENNA WILL BE MOUNTED ON THE RISER POLE.

6. THE CONCRETE COLLAR IS NOT REQUIRED FOR STRUCTURES LOCATED WITHIN PAVED AREAS.

ISSUED:		STANDARD DETAIL		DETAIL NO.
8/92	CITY OF TUCSON FOUNDED 1776	MONITORING STATION	THE SEAL of PIMA COUNTY ARIZONA	WWM 225
REVISED: 7/02				SHEET 2 OF 2

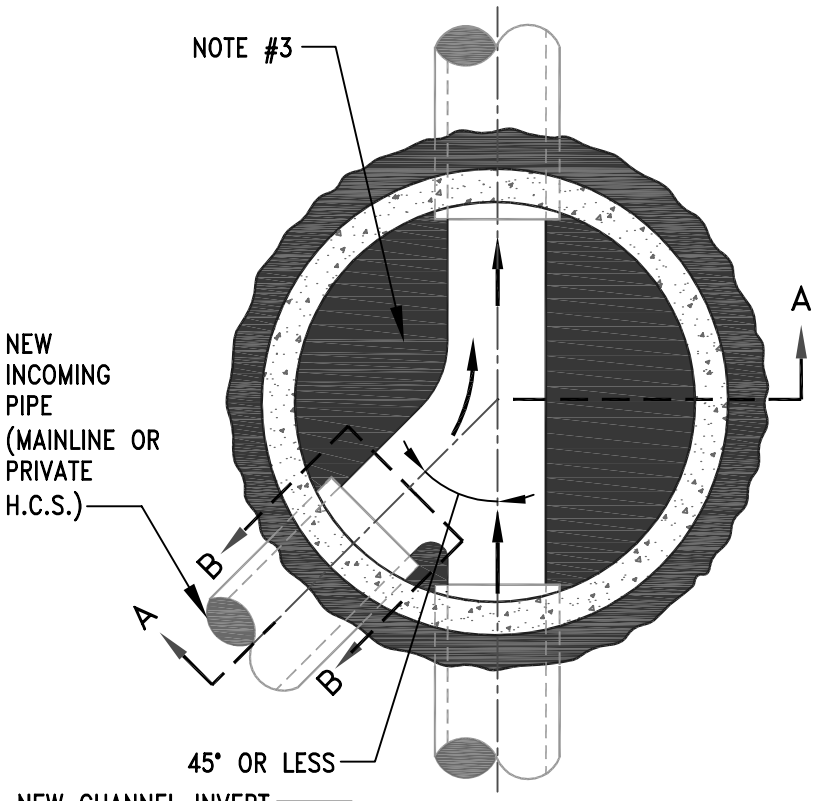

PLAN VIEW

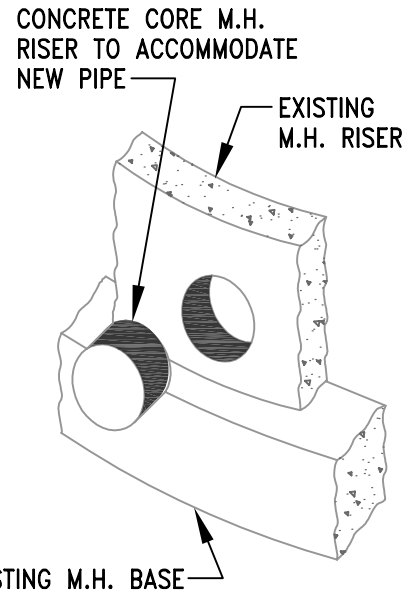

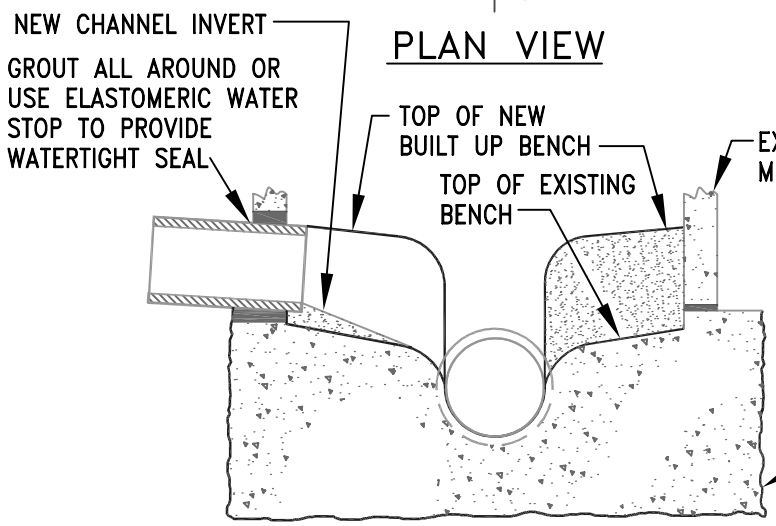

SECTION A–A

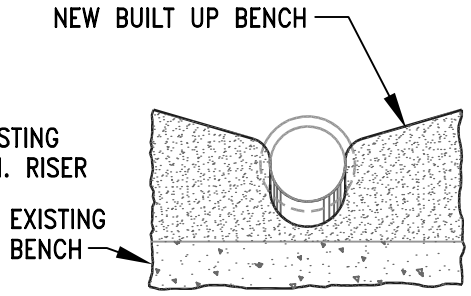

SECTION B–B

NOTES:

1. EXISTING MANHOLE BENCH SHALL BE THOROUGHLY CLEANED PRIOR TO CONSTRUCTING NEW BUILT UP BENCH. NEW BENCH SHALL BE CLASS "S" (f'c = 3,000 psi (20 MPa)) CONCRETE W/ TYPE II PORTLAND CEMENT.
2. ALL CONNECTIONS TO EXISTING MANHOLES SHALL BE INSPECTED AND APPROVED BY PCWMD.
3. SHAPE NEW CHANNEL TO PROVIDE FOR A SMOOTH TRANSITION OF FLOW FROM NEW INCOMING PIPE TO OUTGOING MAIN.

ISSUED:		STANDARD DETAIL		DETAIL NO.
8/92	CITY OF TUCSON FOUNDED 1776	CONNECTION TO EXISTING MANHOLE (NON-REINFORCED BASE)	THE SEAL of PIMA COUNTY ARIZONA	WWM 301
REVISED: 7/02				SHEET 1 OF 1

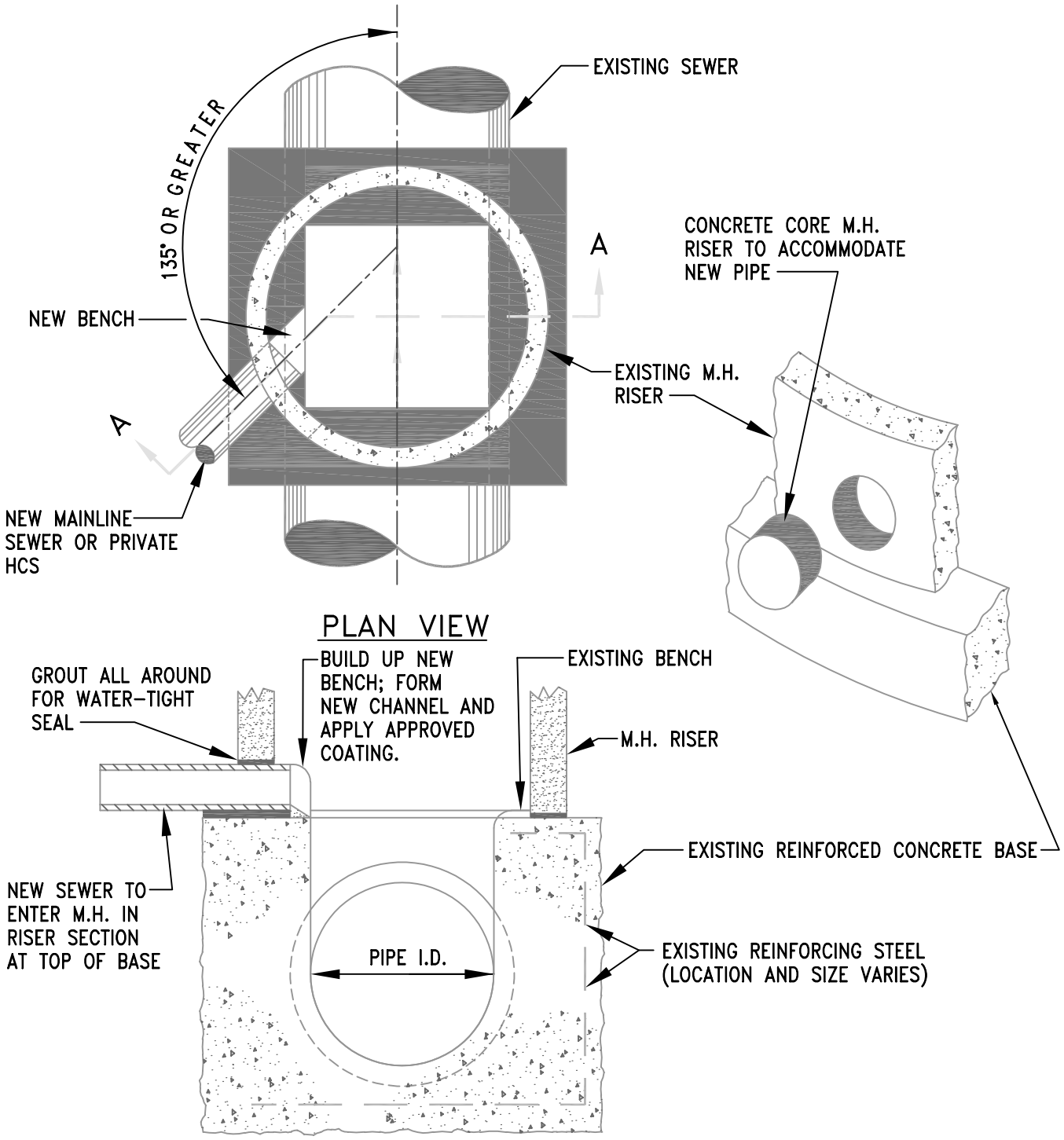

NOTES:

1. EXISTING MANHOLE BENCH SHALL BE THOROUGHLY CLEANED PRIOR TO CONSTRUCTING NEW BUILT UP BENCH. NEW BENCH SHALL BE CLASS "S" (f'c = 3,000 psi (20 MPa)) CONCRETE W/ TYPE II PORTLAND CEMENT.
2. A SINGLE INCOMING 8" (200 mm) OR 10" (250 mm) DIAMETER SEWER THAT IS LOCATED 90° AWAY FROM ANOTHER SINGLE INCOMIMG 8" DIAMETER OR LARGER SEWER IS ACCEPTABLE.

ISSUED:		STANDARD DETAIL		DETAIL NO.
8/92	CITY OF TUCSON FOUNDED 1776	CONNECTION TO EXISTING MANHOLE (REINFORCED CONCRETE BASE)	THE SEAL of PIMA COUNTY ARIZONA	WWM 302
REVISED: 7/02				SHEET 1 OF 1

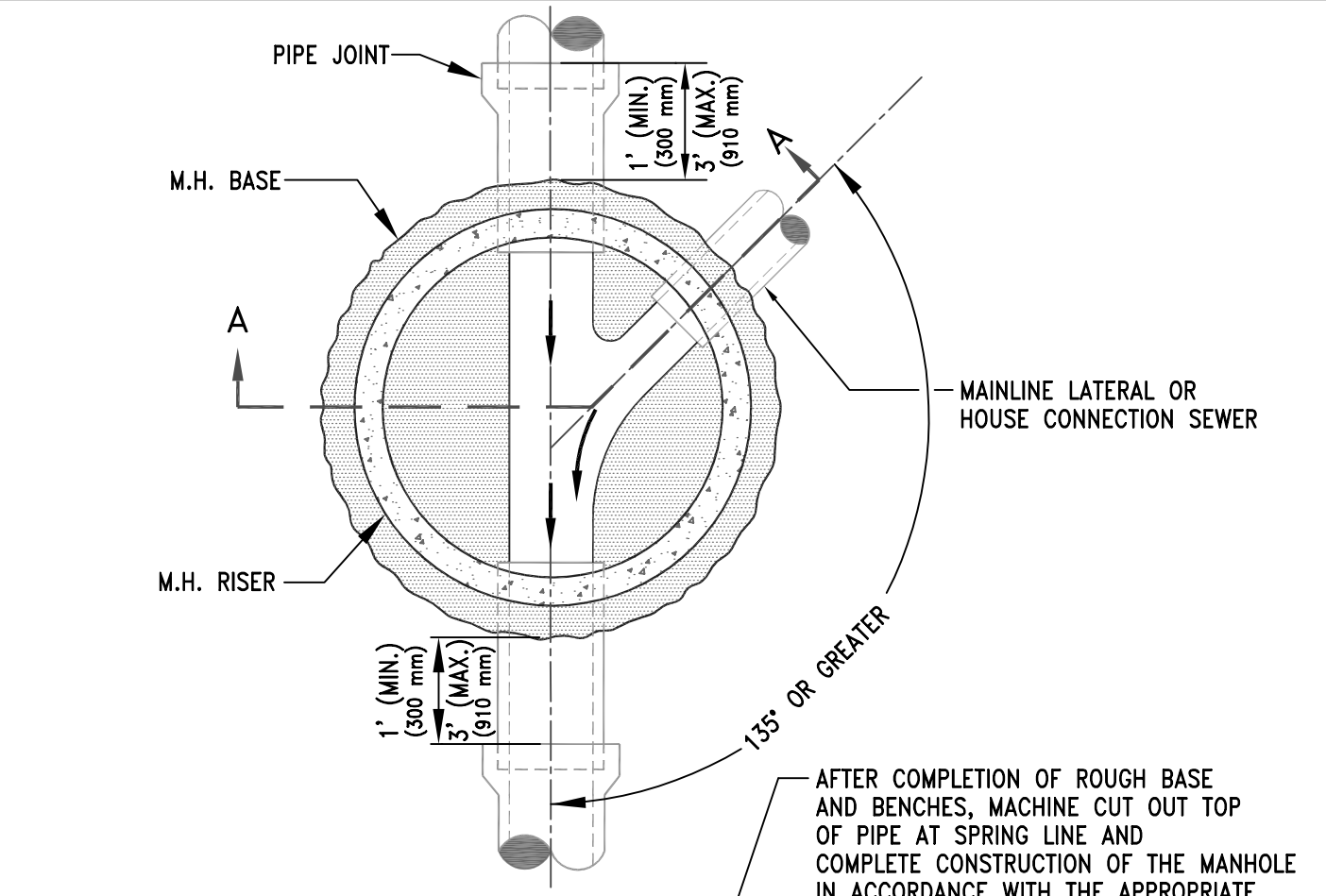

PLAN VIEW

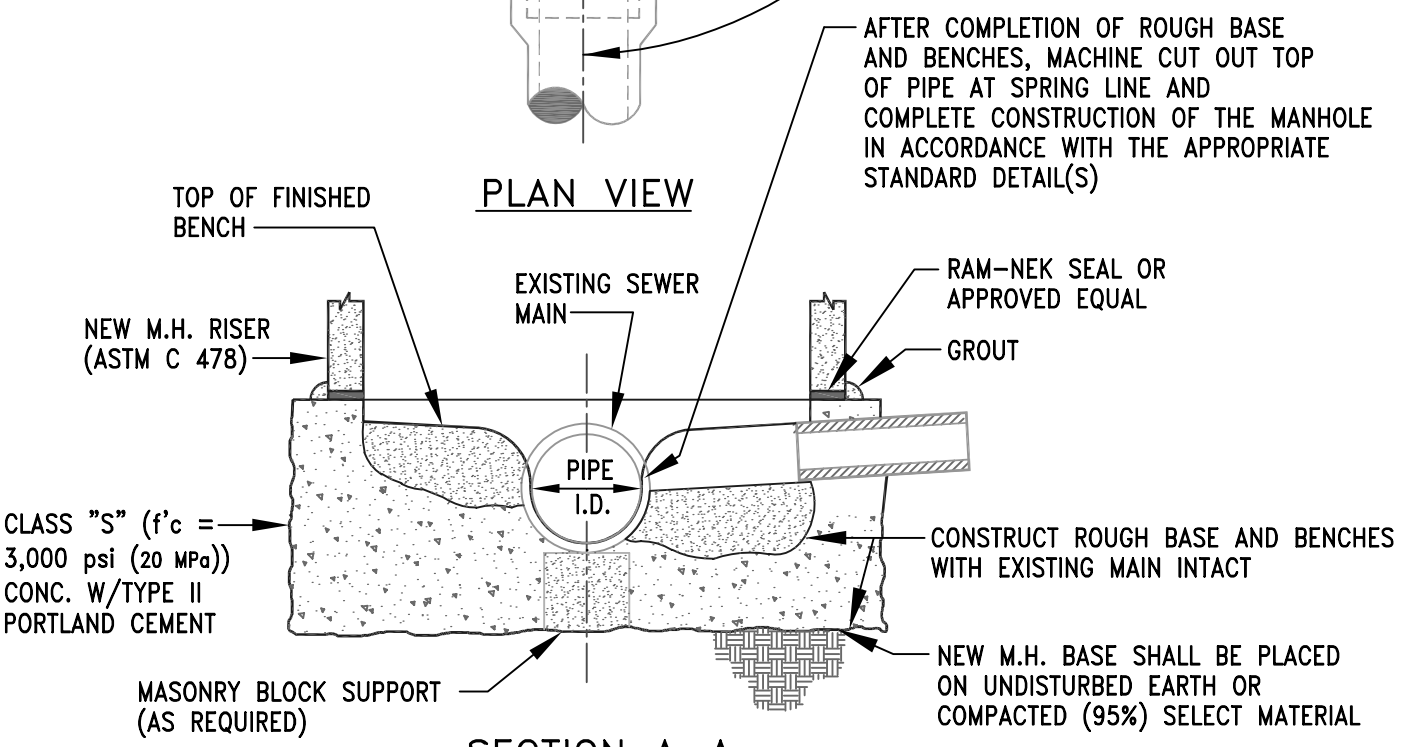

SECTION A–A

NOTE:

1. SPECIAL BEDDING MAY BE REQUIRED TO THE FIRST JOINT BEYOND OPEN TRENCH CONDITIONS (DETERMINED BY DEPTH OF THE EXCAVATION AND TYPE OF SOIL).
2. A SINGLE INCOMING 8" (200 mm) OR 10" (250 mm) DIAMETER SEWER THAT IS LOCATED 90° AWAY FROM ANOTHER SINGLE INCOMIMG 8" DIAMETER OR LARGER SEWER IS ACCEPTABLE.

ISSUED:		STANDARD DETAIL		DETAIL NO.
8/92	CITY OF TUCSON	NEW MANHOLE OVER EXISTING SEWER	THE SEAL of PIMA COUNTY ARIZONA	WWM 303
REVISED: 7/02				SHEET 1 OF 1

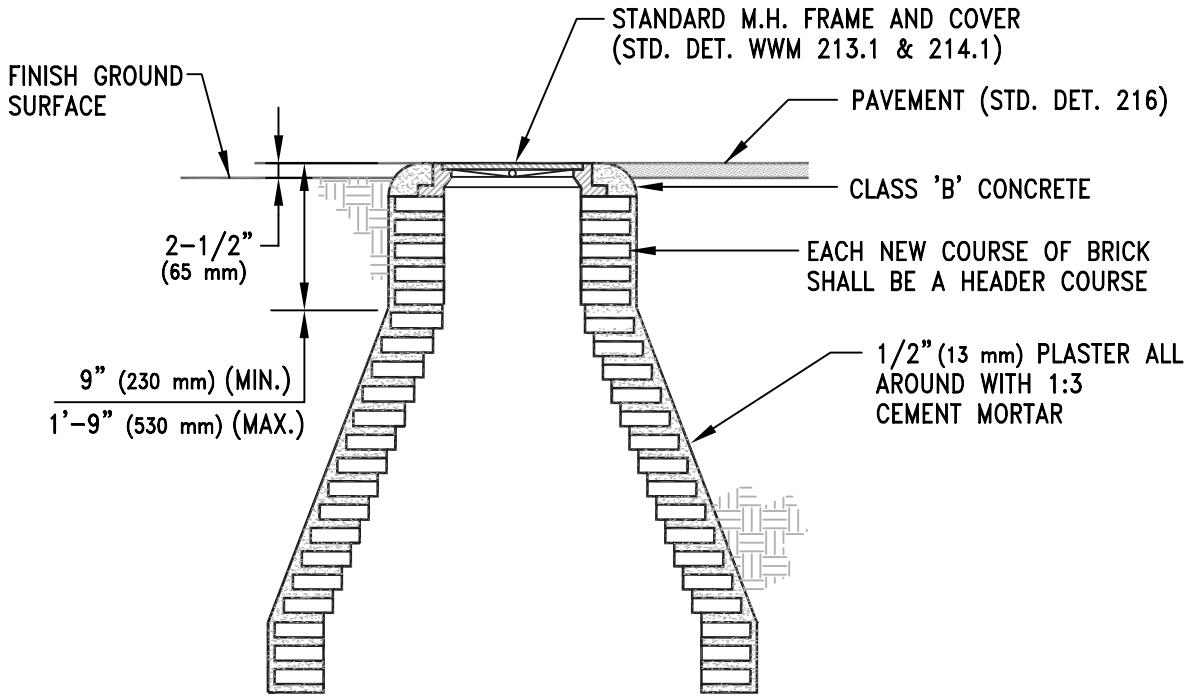

NOTES:

1. RECONSTRUCT CONE IF THE REQUIRED AMOUNT OF ADJUSTMENT CAUSES A VIOLATION OF THE DIMENSIONAL RANGE NOTED ABOVE.

2. ANY RECONSTRUCTION OF A PUBLIC MANHOLE FACILITY SHALL BE INSPECTED AND APPROVED BY PCWWMD.

ISSUED:		STANDARD DETAIL		DETAIL NO.
8/92		BRICK MANHOLE GRADE ADJUSTMENT		WWM 304
REVISED: 7/02				SHEET 1 OF 1

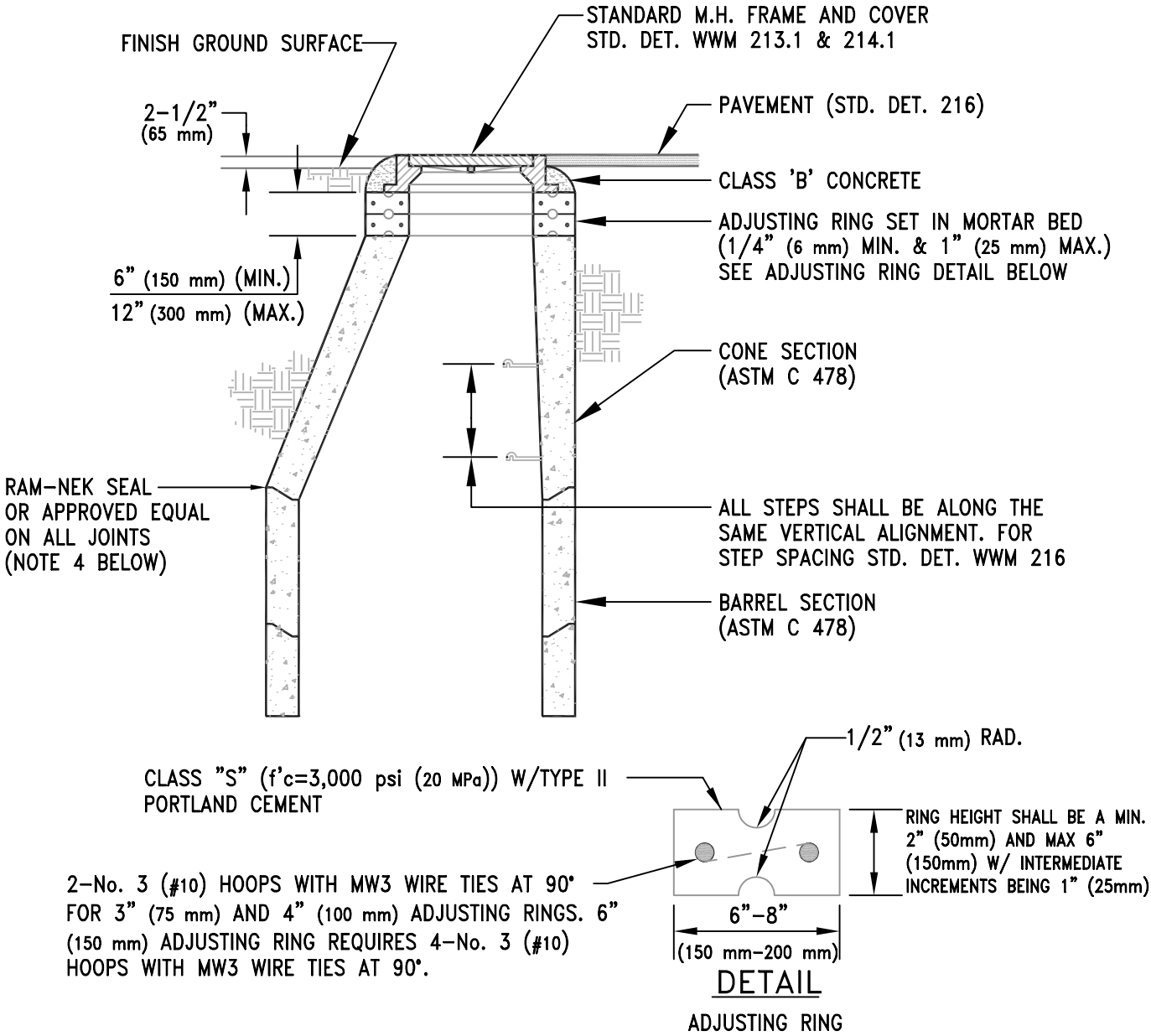

NOTES:

1. RECONSTRUCTION OF THE BARREL/CONE IN ACCORDANCE WITH THIS DETAIL WILL BE REQUIRED IF THE AMOUNT OF ADJUSTMENT CAUSES A VIOLATION OF THE DIMENSIONAL RANGE NOTED ABOVE.

2. ADDITIONAL OR REPLACEMENT MANHOLE SECTIONS SHALL BE NEW MATERIAL.

3. JOINTS OF THE NEW MANHOLE SECTIONS MUST PROVIDE A SUITABLE MATCH (IN CONFIGURATION AND PERFORMANCE) WITH THE EXISTING MANHOLE SECTIONS.

ISSUED:		STANDARD DETAIL		DETAIL NO.
8/92	CITY OF TUCSON FOUNDED 1776	PRECAST CONCRETE MANHOLE GRADE ADJUSTMENT	THE SEAL of PIMA COUNTY ARIZONA	WWM 305
REVISED: 7/02				SHEET 1 OF 1

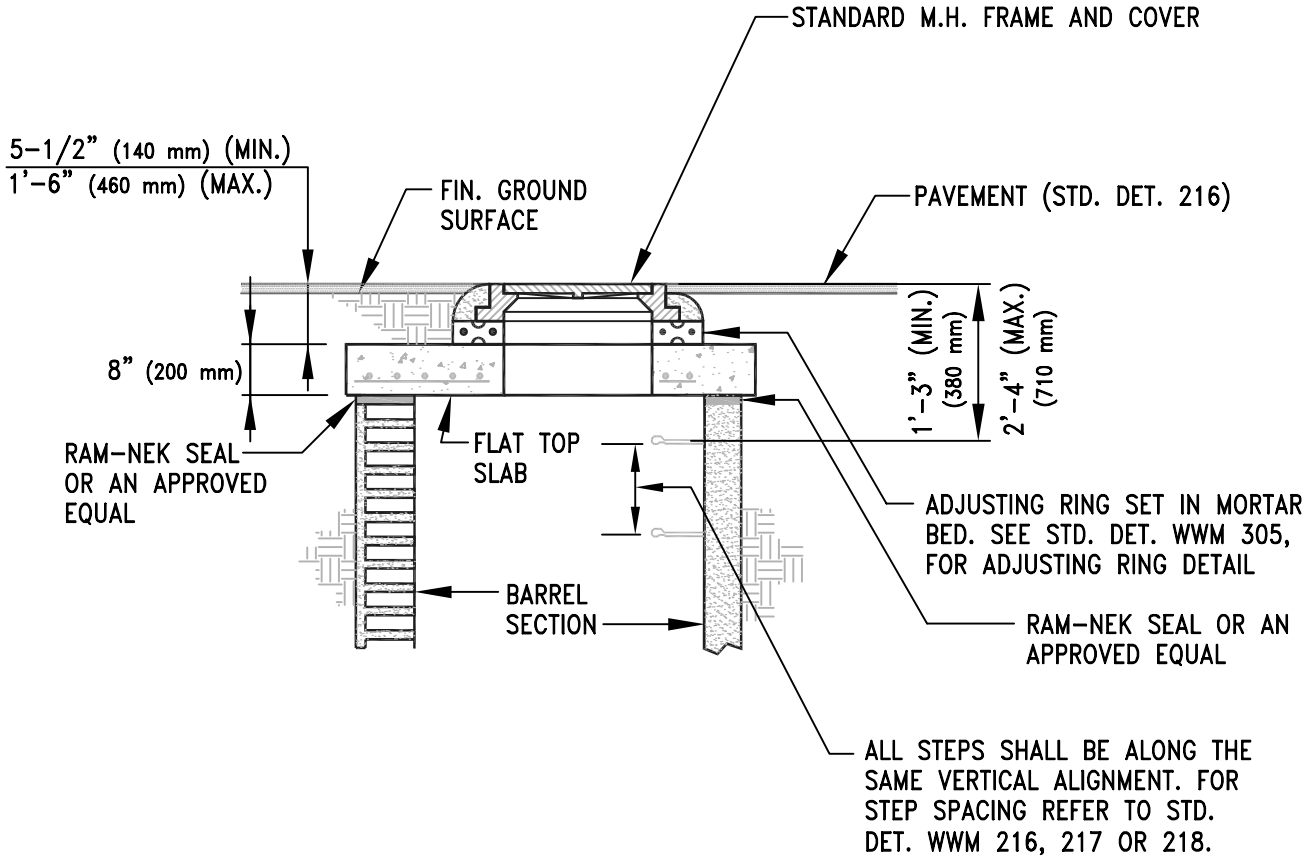

NOTES:

1. RECONSTRUCTION OF THE BARREL IN ACCORDANCE WITH APPROPRIATE STANDARD DETAIL WILL BE REQUIRED IF THE AMOUNT OF ADJUSTMENT CAUSES A VIOLATION OF THE DIMENSIONAL RANGE NOTED ABOVE.

2. ANY RECONSTRUCTION OF A PUBLIC MANHOLE FACILITY SHALL BE INSPECTED AND APPROVED BY PCWMD.

ISSUED:		STANDARD DETAIL		DETAIL NO.
8/92		FLAT TOP MANHOLE GRADE ADJUSTMENT		WWM 306
REVISED: 7/02				SHEET 1 OF 1

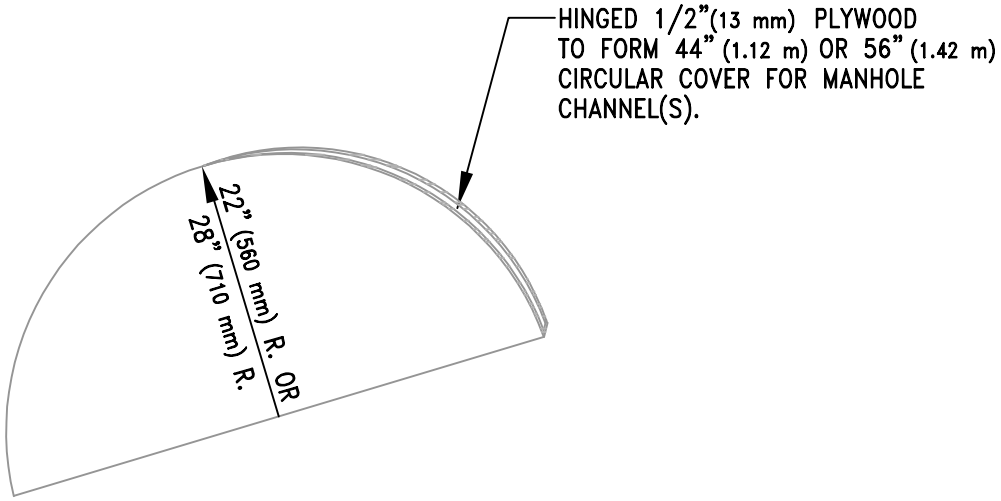

NOTE:

ALL SANITARY SEWER MANHOLES REQUIRING FRAME AND COVER ELEVATION ADJUSTMENTS SHALL HAVE THE CHANNEL(S) COVERED WITH PLYWOOD OR SIMILAR MATERIAL (APPROVED BY PCWMD) DURING THE MODIFICATIONS TO PREVENT DEBRIS FROM ENTERING THE SEWER LINES. ONCE THE MODIFICATIONS ARE COMPLETE, OR AS DIRECTED BY THE ENGINEER, THE PROTECTIVE COVER SHALL BE REMOVED. FOR 24 INCH (610 mm) MANHOLE OPENINGS TO A 5 FOOT (1.52 m) MANHOLE, THE PLYWOOD WILL REQUIRE 2 HINGED JOINTS AT THE THIRD POINTS OF THE CIRCULAR COVER.

ISSUED:		STANDARD DETAIL		DETAIL NO.
8/92		MANHOLE CHANNEL COVER		WWM 307
REVISED: 7/02				SHEET 1 OF 1

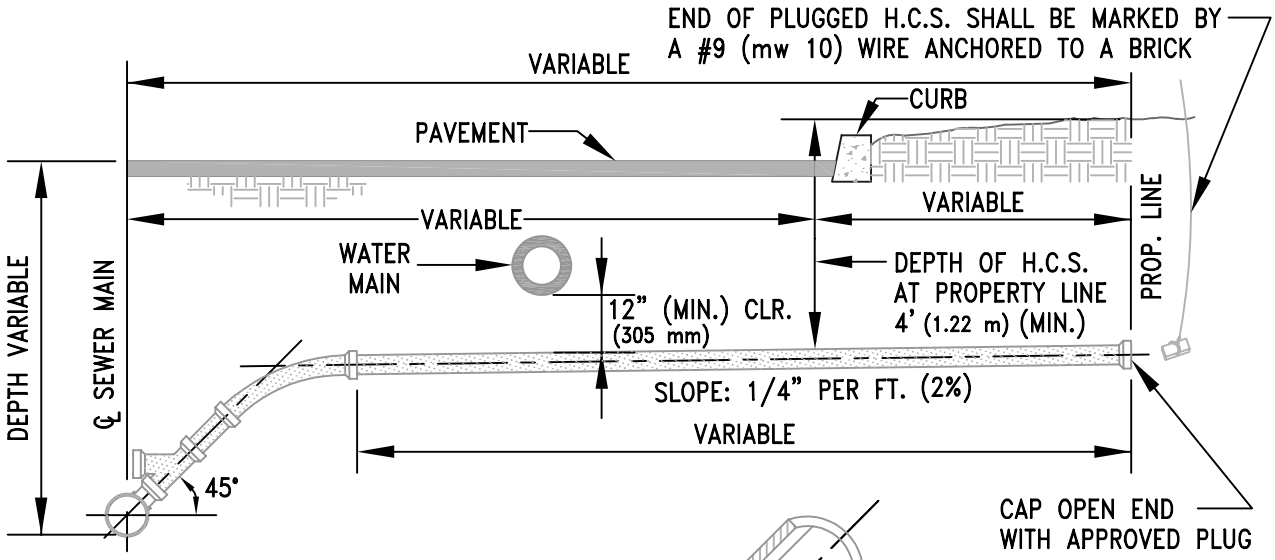

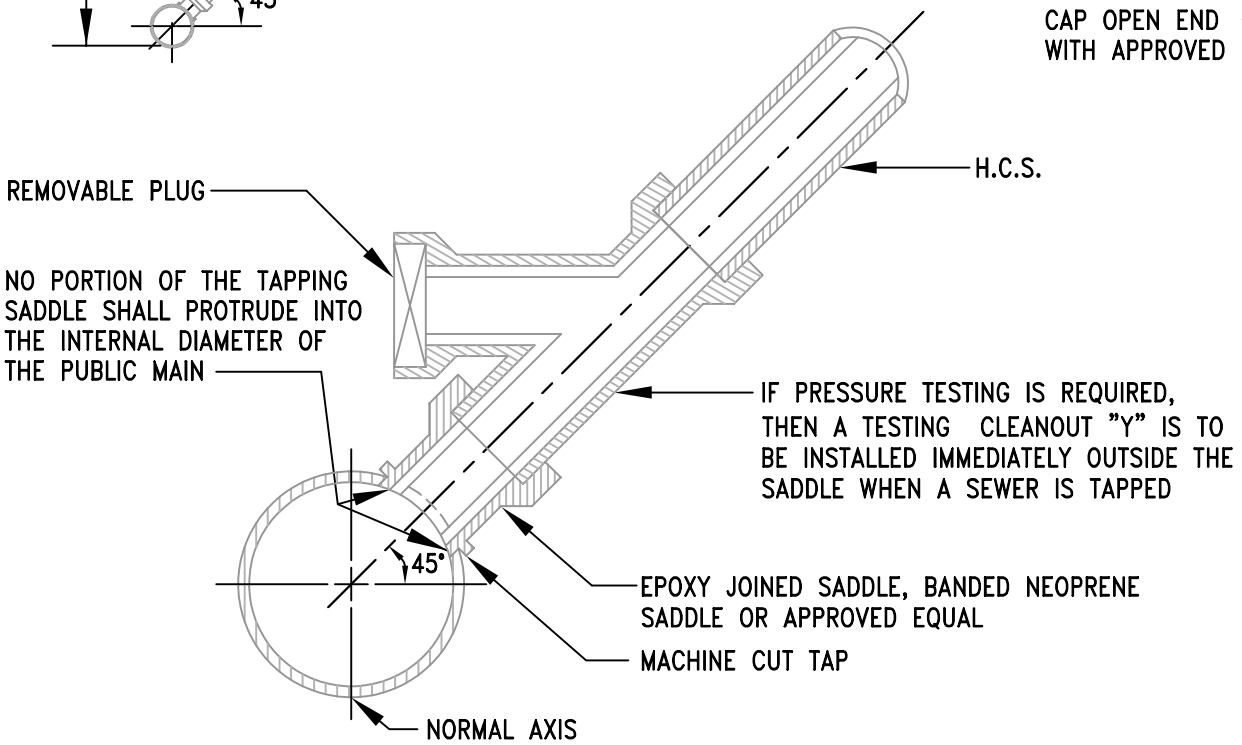

NOTES:

1. WHERE MINIMUM DEPTHS AND CLEARANCES CAN NOT BE MAINTAINED, A SPECIAL H.C.S. DESIGN WILL BE REQUIRED.

2. H.C.S. CONNECTIONS INTO SEWER MAINS 12"(300 mm) AND LARGER ARE NOT PERMITTED WITHOUT THE WRITTEN APPROVAL OF PCWMD.

3. FOR H.C.S.'S GREATER THAN 4"(100 mm) IN DIAMETER, THE APPROVAL OF PCWMD. – AS TO THE TYPE & LOCATION OF THE CONNECTION – SHALL BE ACQUIRED IN ADVANCE.

4. THE OWNERSHIP AND MAINTENANCE OF THE ENTIRE H.C.S. – FROM THE OUTSIDE SURFACE OF THE MAINLINE SEWER PIPE CONNECTED (OR MANHOLE) TO THE CONNECTED PLUMBING FIXTURES WITHIN THE BUILDING – SHALL BE THE RESPONSIBILITY OF THE CONNECTEE.

5. ALL CONNECTIONS TO PUBLIC SEWERS SHALL BE MADE WITH "Y" FITTINGS OR BY MACHINE CUT TAP. WHEN A TAP IS MADE, A MACHINE CUT TAP SHALL BE MADE.

ISSUED:		STANDARD DETAIL		DETAIL NO.
8/92	CITY OF TUCSON FOUNDED 1776	HOUSE CONNECTION SEWER (H.C.S.)	THE SEAL of PIMA COUNTY ARIZONA	WWM 401
REVISED: 7/02				SHEET 1 OF 1

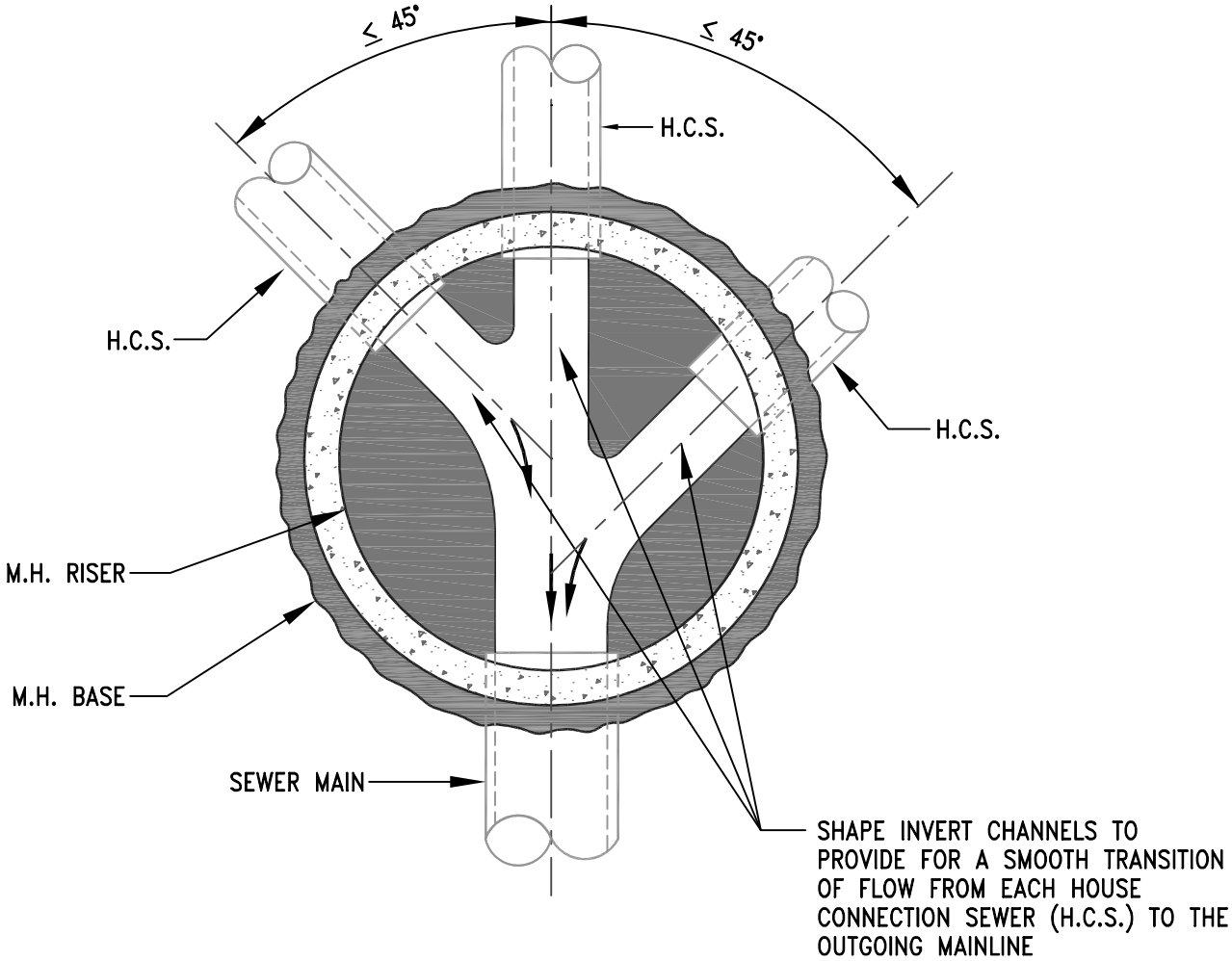

PLAN VIEW

NOTE:

1. HOUSE CONNECTION SEWERS (H.C.S.) SHALL ONLY BE MADE INTO A TERMINAL MANHOLE, UNLESS OTHERWISE APPROVED, IN WRITING, BY PCWMD.
2. CROWN OF H.C.S.(S) TO MATCH CROWN OF SEWER MAIN.

ISSUED:		STANDARD DETAIL		DETAIL NO.
8/92	CITY OF TUCSON FOUNDED 1776	H.C.S. CONNECTION TO MANHOLE	THE SEAL of PIMA COUNTY ARIZONA	WWM 402
REVISED: 7/02				SHEET 1 OF 1

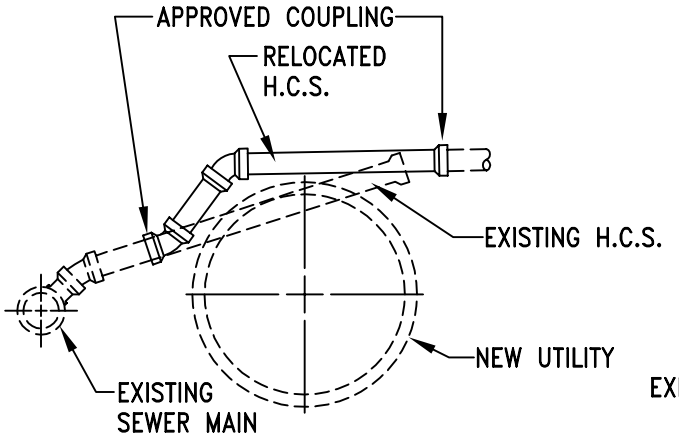

CASE "A"

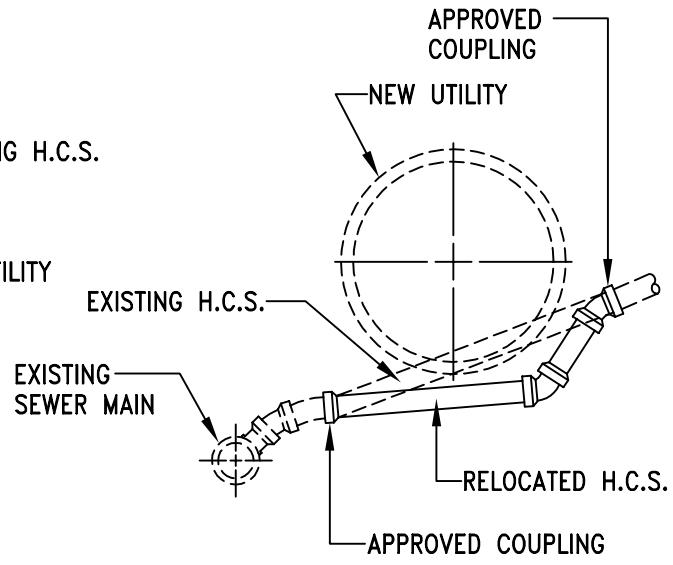

CASE "C"

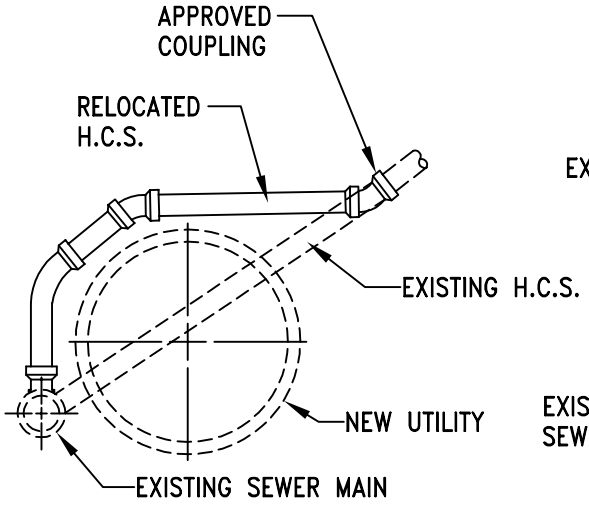

CASE "B"

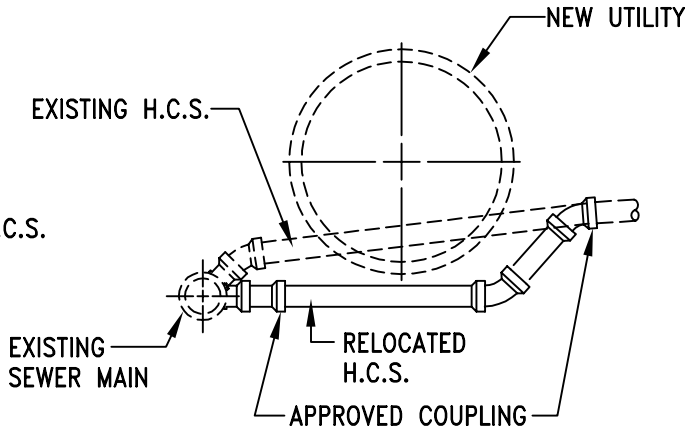

CASE "D"

NOTES:

1. THE RELOCATED H.C.S. SHALL BE CONSTRUCTED OF POLYVINYL CHLORIDE (PVC) PIPE EXCEPT WHERE THE TOP OF THE H.C.S. IS LESS THAN 12 INCHES (305 mm) BELOW THE UTILITY OR HAS LESS THAN 3 FEET (910 mm) OF COVER TO FINISHED GRADE. IN THESE CASES THE PIPE MATERIAL SHALL BE DUCTILE IRON.
2. THE RELOCATED H.C.S. SHALL BE CONNECTED TO THE H.C.S. PIPE WITH APPROVED COUPLINGS.
3. USE OF CASE "D" TYPE REROUTING DEPENDS ON THE LEVEL OF FLOW (PRESENT AND FUTURE) WITHIN MAINLINE SEWER – SUBJECT TO CASE BY CASE APPROVAL BY ENGINEER / PCWMD
4. MINIMUM SLOPE ON ANY REROUTED SEGMENT OF H.C.S. TO BE 1.00%.

ISSUED:		STANDARD DETAIL		DETAIL NO.
8/92	CITY OF TUCSON FOUNDED 1776	HOUSE CONNECTION SEWER REROUTING	THE SEAL of PIMA COUNTY ARIZONA	WWM 404
REVISED: 7/02				SHEET 1 OF 1

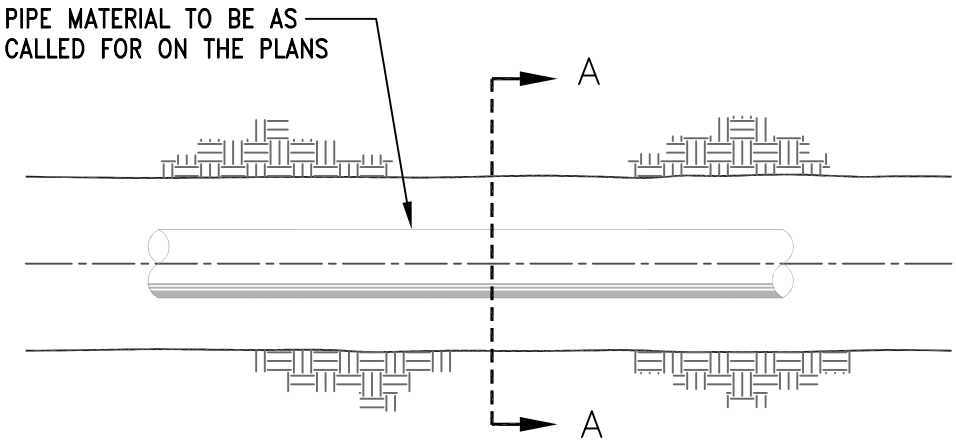

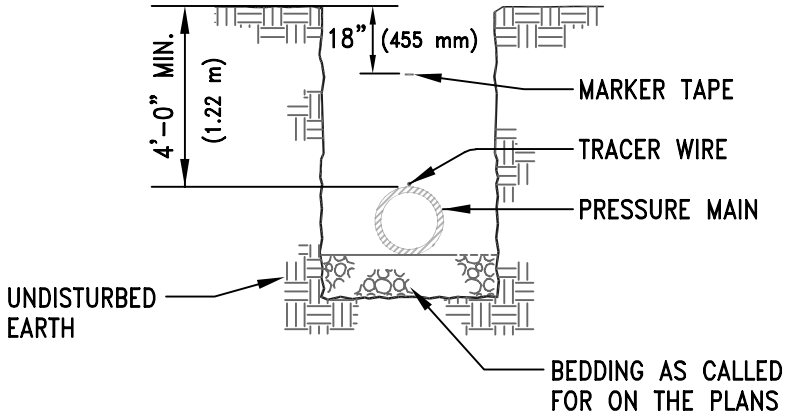

SECTION A–A

NOTES:

1. A CONTINUOUS MAGNETIC MARKER TAPE APPROVED BY PCWMD, SHALL BE BURIED 18 INCHES (455 mm) BELOW GROUND SURFACE AT FINAL GRADE. CONTINUOUS PRINTING ON THE TAPE SHALL STATE "CAUTION: SEWAGE PRESSURE LINE".

2. INSTALLATION OF ACCEPTABLE PRESSURE PIPE MATERIAL SHALL BE IN ACCORDANCE WITH CURRENT PCWMD STANDARDS.

3. THE HORIZONTAL LOCATION OF THE PRESSURE LINE SHALL BE IDENTIFIED BY A PERMANENT MARKER CONFORMING TO STD. DET. WWM 224.

4. THE TRACER WIRE SHALL BE 14 gauge (2.5 mm^2) SOLID COPPER WIRE WITH 15 MIL (380 μm) PVC OR POLYETHYLENE COATING AND BE SECURELY TAPED TO THE TOP OF PIPE AT 20 FOOT (6 meter) INTERVALS.

5. TRACER WIRE SHALL BE BROUGHT TO THE GROUND SURFACE AT THE TEST STATION LOCATIONS INDICATED ON THE PLANS.

ISSUED:		STANDARD DETAIL		DETAIL NO.
8/92		MARKER TAPE LOCATION		WWM 504
REVISED:				
7/02				SHEET 1 OF 1

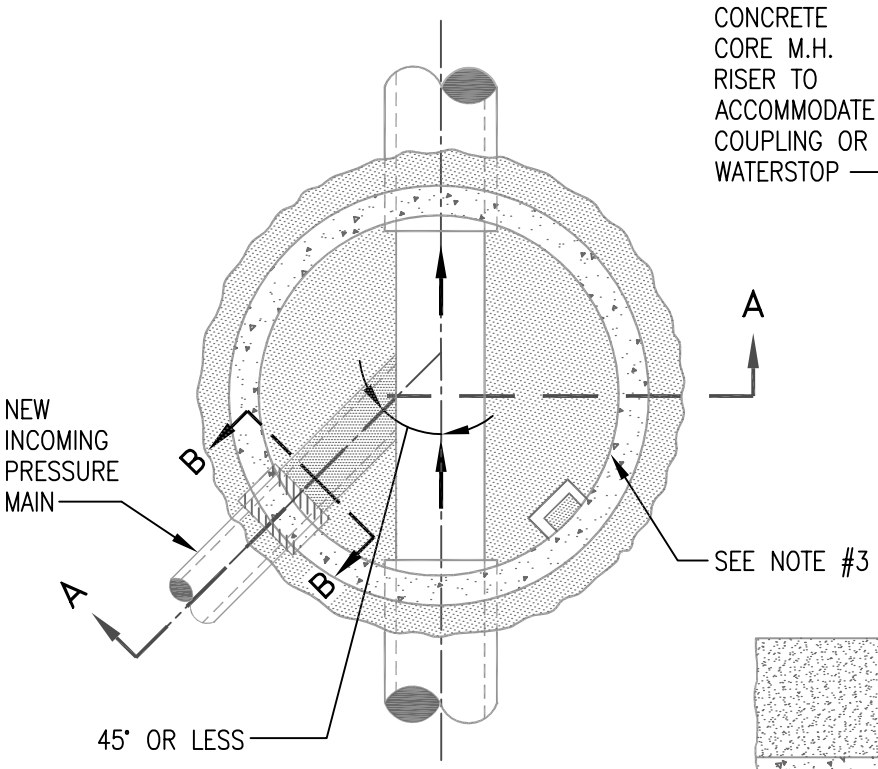

PLAN VIEW

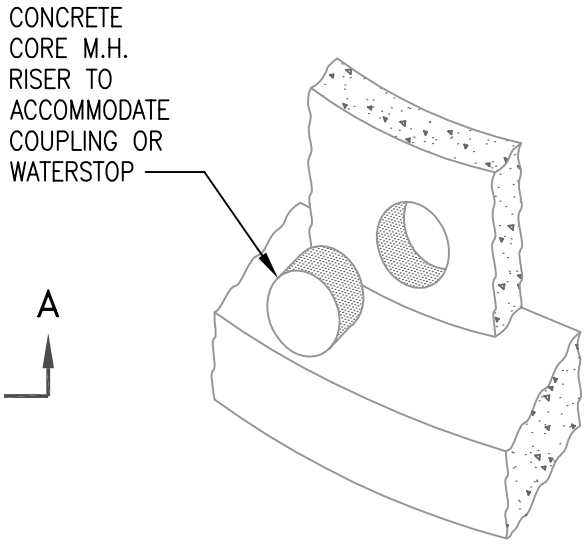

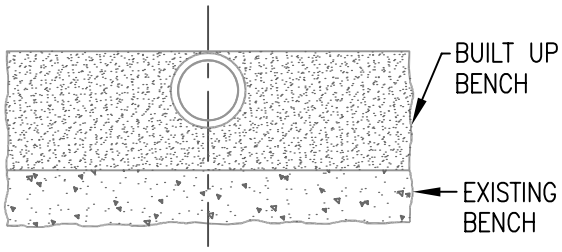

SECTION B–B

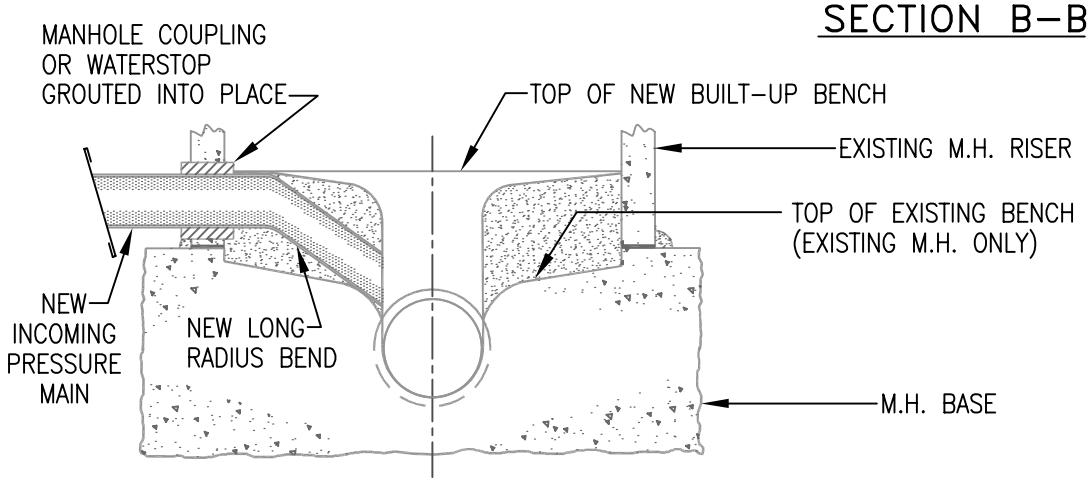

SECTION A–A

NOTES:

1. EXISTING MANHOLE BENCH TO BE THOROUGHLY CLEANED PRIOR TO CONSTRUCTING NEW BUILT UP BENCH. NEW BENCH SHALL BE CLASS "S" (f'c = 3,000 psi (20 MPa)) CONCRETE W/ TYPE II PORTLAND CEMENT.

2. IF CONNECTING TO TERMINAL MANHOLE, BRING PRESSURE MAIN INTO MANHOLE IN STRAIGHT LINE ALIGNMENT WITH OUTLET MAIN.

3. INTERIOR OF MANHOLE TO BE PROTECTED WITH A PCWMD APPROVED COATING.

ISSUED:		STANDARD DETAIL		DETAIL NO.
8/92	CITY OF TUCSON FOUNDED 1776	PRESSURE MAIN CONNECTION EXISTING MANHOLE	THE SEAL of PIMA COUNTY ARIZONA	WWM 505
REVISED: 7/02				SHEET 1 OF 1

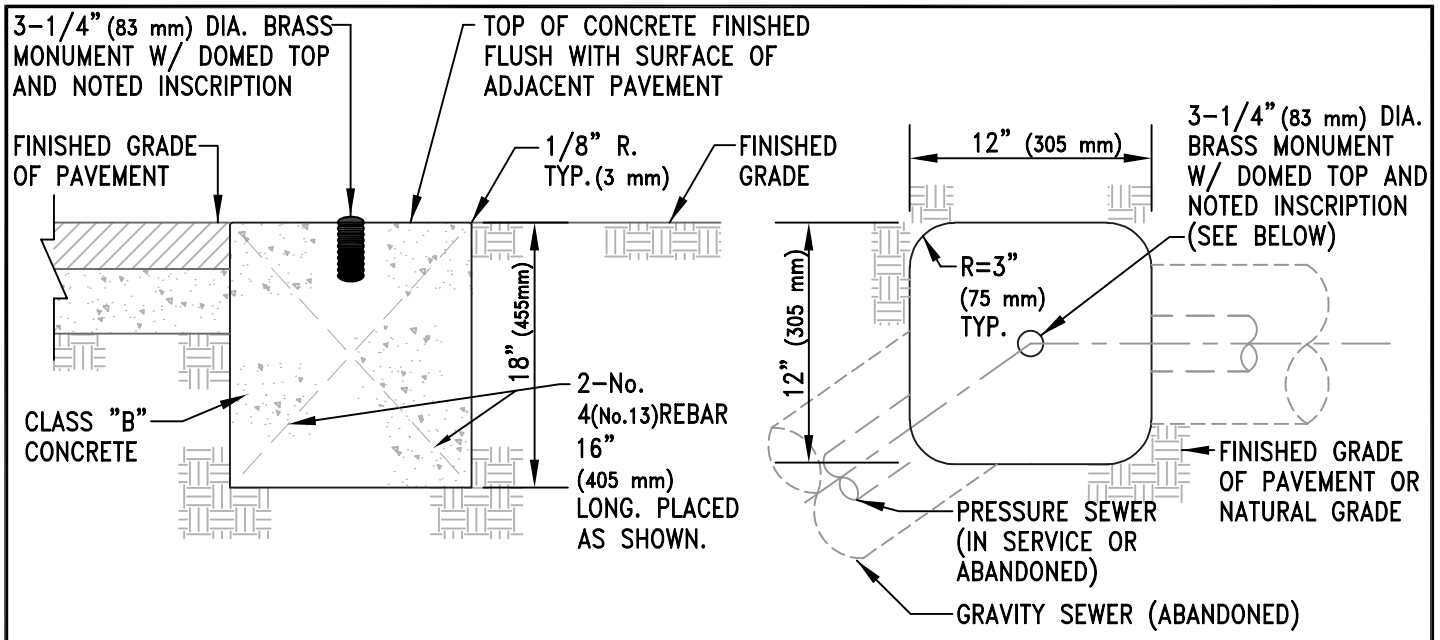

SECTION VIEW

PLAN VIEW

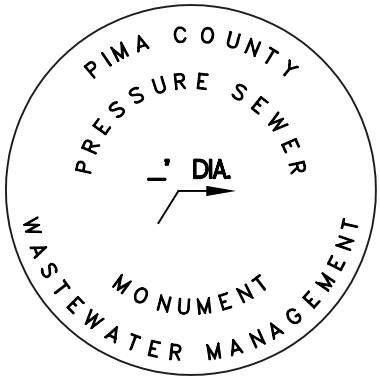

FOR _" DIAMETER FORCE MAIN

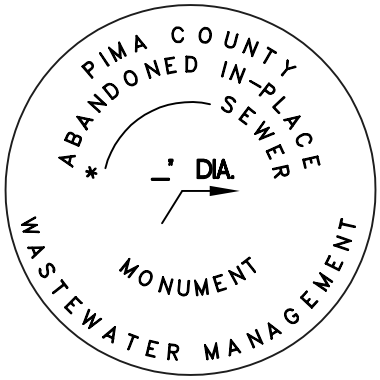

FOR _" DIAMETER PRESSURE OR GRAVITY SEWER

NOTES:

1. THE CONTRACTOR IS RESPONSIBLE FOR:

   A. STAMPING FLOW ARROWS ON THE MONUMENT SHOWING THE APPROPRIATE DIRECTION(S) OF WASTEWATER FLOW IN THE PRESSURE SEWER.

   B. STAMPING THE DIAMETER OF THE PRESSURE SEWER ON THE MONUMENT.

2. LETTER SIZE SHALL BE 3/16"(5 mm) FOR AGENCY NAME AND 5/32"(4 mm) FOR ALL OTHER LETTERING.

3. MONUMENT DATA SHALL BE AS SHOWN, WITH THE EXCEPTION THAT THE "UNDERLINE" NOTATION IS NOT TO BE CAST OR STAMPED. THIS NOTATION IS ONLY TO CALL ATTENTION TO THE NEED FOR INCLUSION OF THE PIPE DIAMETER AND/OR SEWER TYPE (i.e. "PRESSURE" OR "GRAVITY")

4. THE TWO No. 4 (#13) BARS MAY BE REPLACED WITH A MAGNET OF A SIZE APPROVED BY THE AGENCY AND PLACED AT THE BASE OF THE BRASS MARKER.

ISSUED:		STANDARD DETAIL		DETAIL NO.
8/92	CITY OF TUCSON FOUNDED 1776	SEWER LOCATION MONUMENT	THE SEAL of PIMA COUNTY ARIZONA	WWM 507
REVISED: 7/02				SHEET 1 OF 1

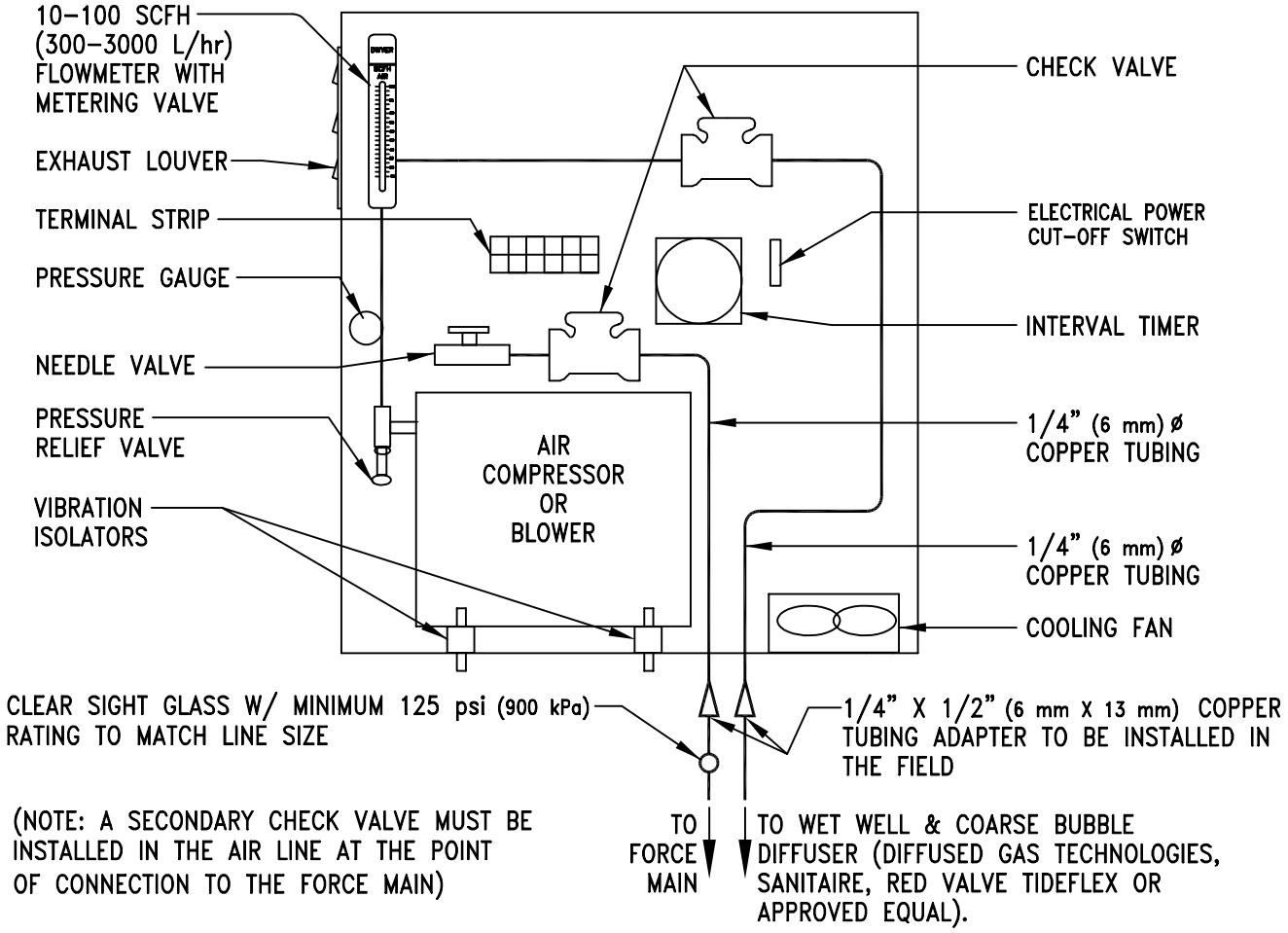

NOTES:

1. BOTTOM OF AIR DIFFUSER TO BE LOCATED 6" AT LEAST (150 mm) ABOVE THE PUMP INLET ELEVATION IN THE WET WELL. THE TOP OF THE DIFFUSER SHALL BE LOCATED 2" (51 mm) BELOW THE LOWEST LEVEL. LOCATE AS FAR FROM THE PUMP AS FEASIBLE.

2. TIMER TO RUN 15 MINUTES ON AND 15 MINUTES OFF 24 HOURS PER DAY.

3. COPPER TUBING TO BE BURIED UNDER THE SOIL FOR AT LEAST 5 FEET (1.5 m) TO DISSIPATE HEAT.

4. AIR COMPRESSOR OR BLOWER SIZE AND TYPE TO BE DETERMINED BY THE ENGINEER AND SUBMITTED FOR REVIEW AND APPROVAL BY PIMA COUNTY WASTEWATER MANAGEMENT. EXAMPLE COMPRESSOR OR BLOWER WOULD BE GAST DIAPHRAGM COMPRESSOR, M-D PNEUMATIC BLOWER OR APPROVED EQUAL.

5. APPROPRIATE RELAY(S) MUST BE INSTALLED TO PRECLUDE THE COMPRESSOR FROM OPERATING WHEN THE PUMP(S) ARE RUNNING. THE RELAY(S) MAY BE INSTALLED IN EITHER THE PUMP CONTROL PANEL OR AERATION PANEL.

6. COMPONENTS OF THE AERATION PANEL WILL BE MANUFACTURED SO THAT ANY COMPONENT OF THE PANEL CAN BE REMOVED/REPLACED WITHOUT CUTTING TUBING OR PIPE.

7. INSTALL FORTY MESH STAINLESS STEEL BUG SCREEN UNDER EXHAUST LOUVER AND FAN INLET.

8. CHECK VALVES SHALL HAVE A RESILIENT SEAT. ENGINEER TO DETERMINE IF A STAINLESS STEEL CLOSURE SPRING IS NEEDED.

9. ENCLOSURE SHALL BE NEMA 3R, 20"x 20" (510 mm x 510 mm) MINIMUM.

ISSUED:		STANDARD DETAIL		DETAIL NO.
8/92	CITY OF TUCSON	PRIVATE PUMP STATION DUAL OUTLET AIR INJECTION PANEL	THE SEAL of PIMA COUNTY ARIZONA	WWM 509
REVISED: 7/02				SHEET 1 OF 1

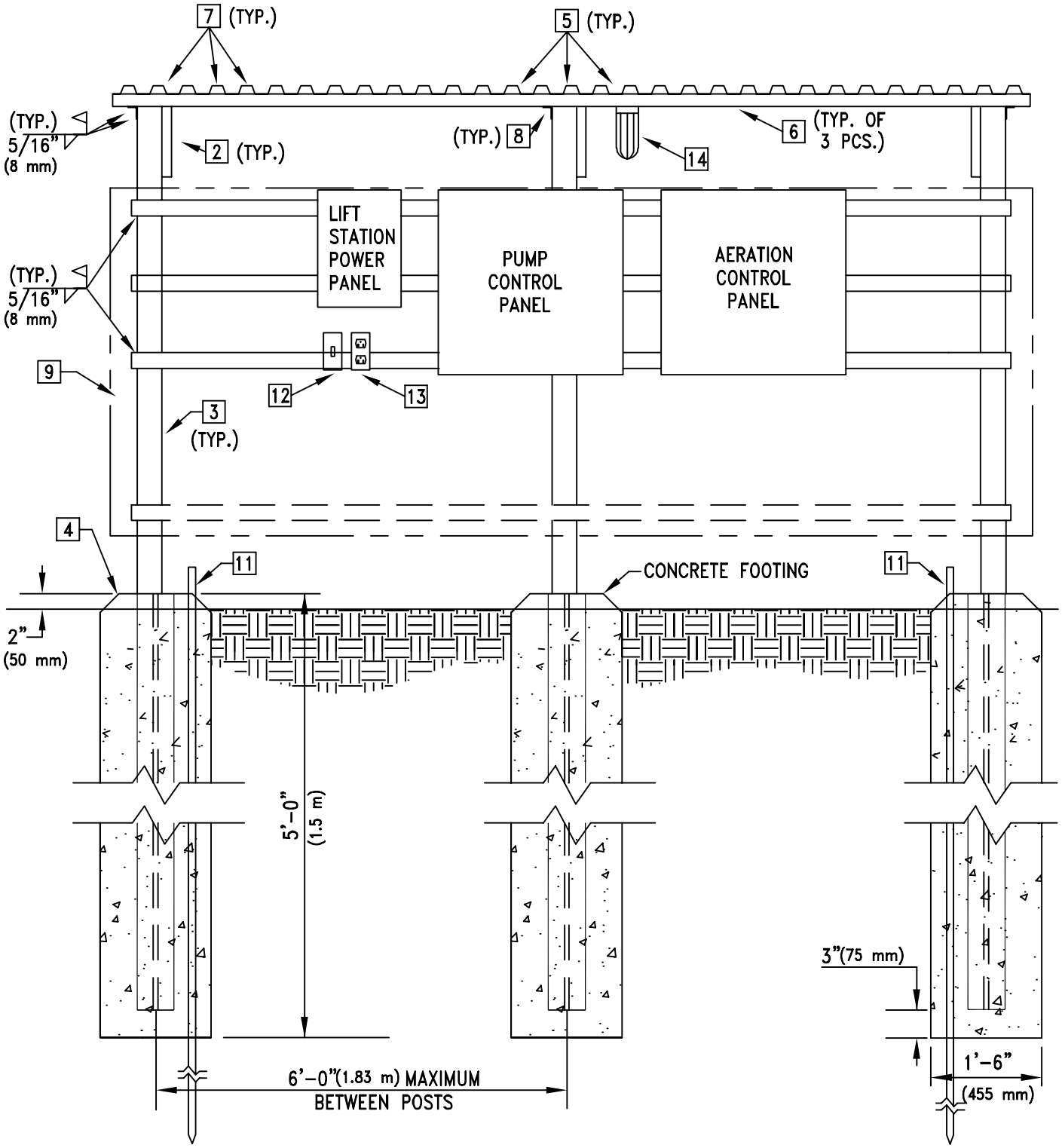

FRONT

ISSUED:		STANDARD DETAIL		DETAIL NO.
8/92	CITY OF TUCSON FOUNDED 1776	SHADE AND EQUIPMENT SUPPORT STRUCTURE	THE SEAL of PIMA COUNTY ARIZONA	WWM 510
REVISED: 7/02				SHEET 1 OF 3

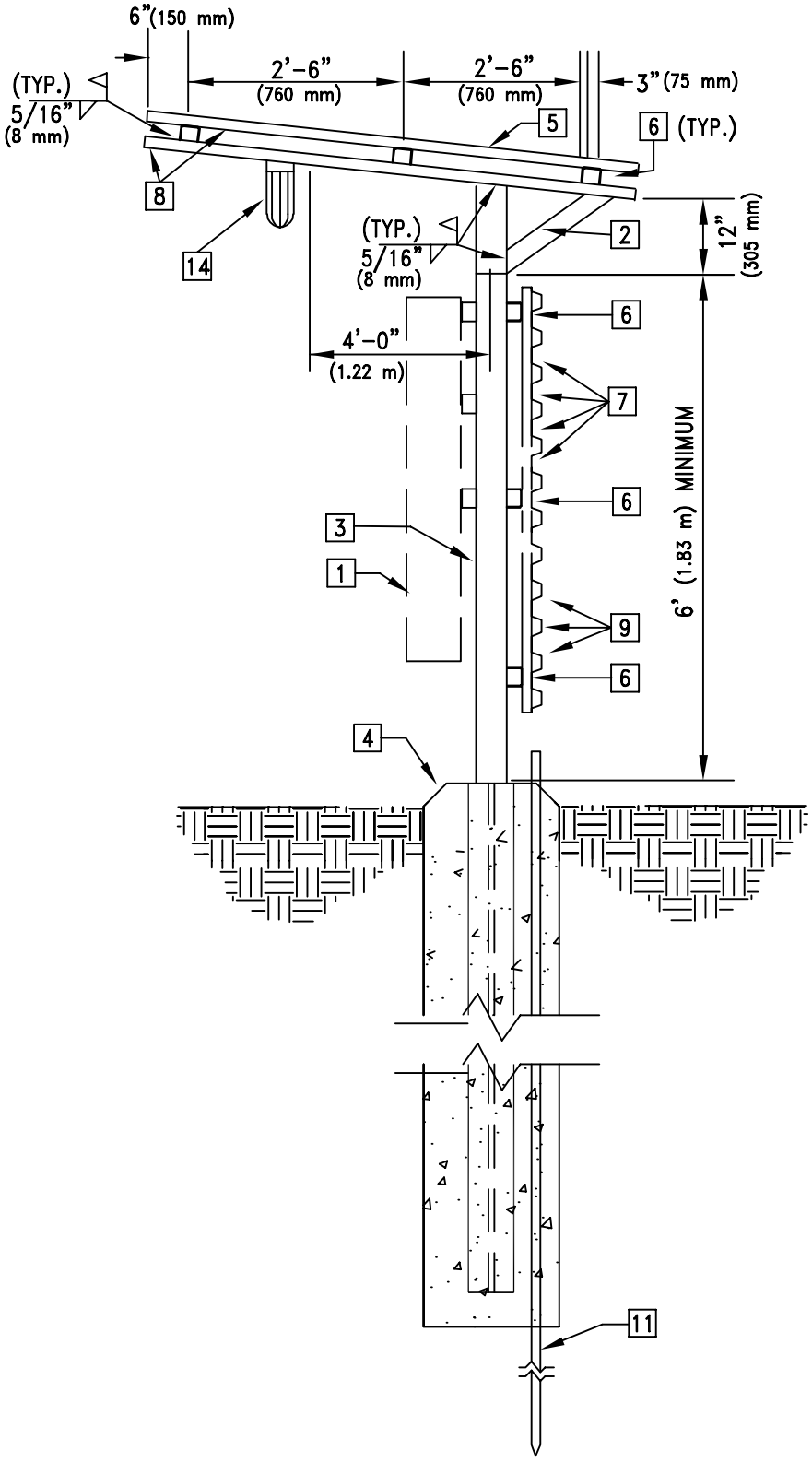

SIDE

ISSUED:		STANDARD DETAIL		DETAIL NO.
8/92		SHADE AND EQUIPMENT SUPPORT STRUCTURE		WWM 510
REVISED:				
7/02				SHEET 2 OF 3

GENERAL NOTES

1. LOCATION, SIZE, AND MOUNTING CONFIGURATION OF EQUIPMENT SHOWN IS APPROXIMATE. LENGTH OF RACK AND NUMBER OF HORIZONTAL SUPPORTS (3 MIN.) TO BE ADJUSTED TO FIT EQUIPMENT. COORDINATE WITH EQUIPMENT MANUFACTURER'S RECOMENDATIONS.

2. UNDERGROUND AND ABOVEGROUND CONDUITS ARE NOT SHOWN. REFER TO PLANS FOR COMPLETE INFORMATION ON POWER CONDUITS.

3. ALL CONDUIT ENTRIES INTO RACKED EQUIPMENT FROM UNDERGROUND SHALL BE MADE WITH A SEALOFF FITTING.

4. PROVIDE EQUIPMENT GROUNDING CONDUCTOR IN ALL CONDUITS, SIZED PER NEC.

5. PANELBOARD SHALL BE AS SHOWN ON SCHEDULE. PANELBOARD SHALL ALSO HAVE THE FOLLOWING FEATURES:
- UL LISTED AND NEC COMPLIANT
- DEAD FRONT SAFETY TYPE
- COPPER BUS BARS, INCLUDING FULL NEUTRAL
- GROUND BAR
- GALVANIZED STEEL CABINET WITHOUT KNOCKOUTS.
- OWNER STANDARD LOCK
- DIRECTORY CARD
- ENGRAVED NAMEPLATE, 1/4" (6 mm) WHITE LETTERING ON BLACK BACKGROUND, SHOWING PANEL NAME, MAINS RATING, AND VOLTAGE.

6. PAINT ALL SHADE STRUCTURE AND EQUIPMENT SUPPORT MEMBERS WITH ONE COAT OF PAINT NO. 1 – ALKYD PRIMER AND ONE COAT OF PAINT NO. 2 – ALKYD (WHITE) CONFORMING TO THE REQUIREMENTS OF STD. SPECIFICATION 1002.

☐ KEYNOTES

1. ELECTRICAL EQUIPMENT ON RACK.

2. 2-1/2" X 1-1/2" X 3/16" (64 mm x 38 mm x 5 mm) ANGLE IRON.

3. 4" (100 mm) DIAMETER GALVANIZED STEEL SUPPORT POST (TYP.).

4. 2500 PSI (20 MPa) CONCRETE FOUNDATION.

5. 2.25" X 12" X 0.025" (57 mm x 305 mm x 0.64 mm) ALUMINUM RIB "W" PANEL AT 2% SLOPE.

6. UNISTRUT P-3000 CHANNEL CONTINUOUS (TYP.)

7. #7 (3 mm) S.M. SCREWS, 3/8" (10 mm) LONG, 6" (150 mm) O.C.

8. 1-3/4" X 1-1/4" X 3/16" (44 mm x 32 mm x 5 mm) ANGLE IRON.

9. 2.25" X 12" X 0.025" (57 mm x 305 mm x 0.64 mm) ALUMINUM RIB "W" PANEL. MOUNT TO (3) UNISTRUT CHANNELS ON BACK OF EQUIPMENT RACK.

10. OPEN SIDE TO THE NORTH, IF POSSIBLE, TO GET THE GREATEST SHADE.

11. GROUND ROD. 3/4" X 10' (19 mm x 3m) COPPER-CLAD STEEL. BOND GROUND RODS TO STRUCTURAL SUPPORTS AND PANELBOARD GROUND BAR WITH #8 AWG. (10 mm^2) BARE COPPER.

12. WEATHERPROOF SWITCH FOR LIGHTING.

13. 20A GFCI TOOL RECEPTACLE WITH WP COVER. SHALL BE WEATHERPROOF WITH PLUG IN PLACE AND COVER CLOSED.

14. GE #H7113B3CDD ENCLOSED AND GASKETED COMPACT FLUORESCENT FIXTURE, OR APPROVED EQUAL. NO SHIELDING IS REQUIRED BY THE OUTDOOR LIGHTING CODE.

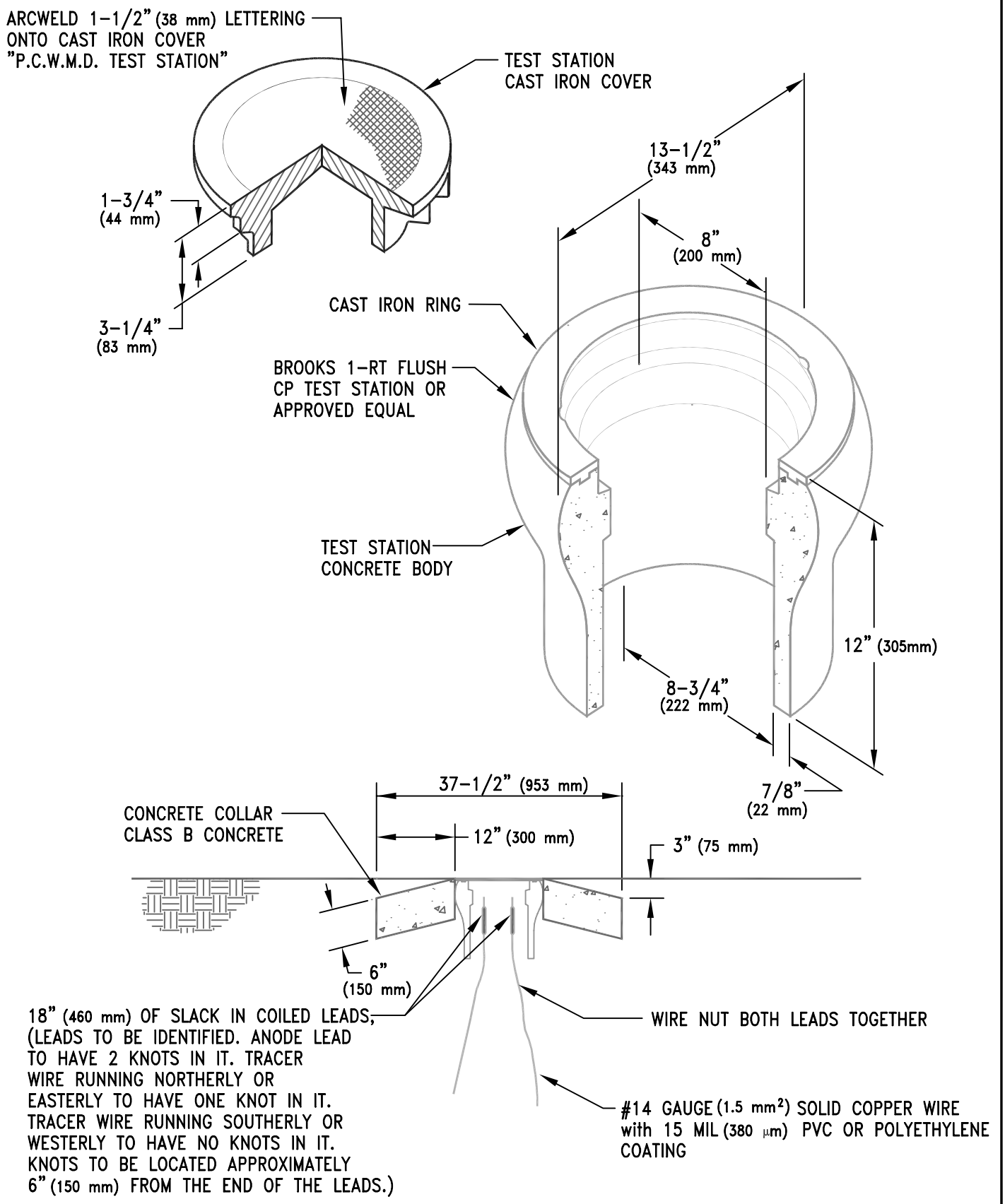

ISSUED:		STANDARD DETAIL		DETAIL NO.
8/92	CITY OF TUCSON FOUNDED 1776	TEST STATION	THE SEAL of PIMA COUNTY ARIZONA	WWM 511
REVISED: 7/02				SHEET 1 OF 1

DETAIL NO.	TITLE
W–105	GENERAL CONSTRUCTION NOTES
W–107	DRAINAGE FACILITIES CROSSING DETAILS
W–110	CUSTOMER NOTIFICATION
W–115	PIPE BEDDING AND TRENCH BACKFILL
W–300	VALVE BOX INSTALLATION
W–305	VALVE NUT EXTENSION
W–309	WATER SERVICE NOTES
W–310	WATER SERVICE CONNECTIONS 3/4" (20 mm) AND 1" (25 mm) SINGLE
W–311	1 INCH (25 mm) SPLIT SERVICE CONNECTIONS
W–312	WATER SERVICE CONNECTIONS 1 1/2 INCH (40 mm) AND 2 INCH (50 mm) SINGLE
W–315	NOTES FOR BORING SERVICE LINES
W–316	SERVICE RENEWALS AND TIE OVERS
W–317	PURGING OF SERVICE LINES
W–318	METER BOXES
W–330	AIR RELEASE VALVE INSTALLATION, 3/4" (20 mm) OR 1" (25 mm)
W–331	AIR RELEASE VALVE INSTALLATION 2" (50 mm)
W–335	STANDARD VAULT
W–350	SYSTEM ABANDONMENT
W–400	DRAIN VALVE ASSEMBLY
W–500	FIRE HYDRANT INSTALLATION
W–600	RESTRAINED JOINTS
W–610	CONCRETE THRUST BLOCKING
W–700	CORROSION MONITORING SYSTEM NOTES
W–701	TEST LEAD PLACEMENT
W–702	PIPE JOINT BONDING
W–703	EXOTHERMIC WELDING
W–704	FLANGE INSULATING KIT
W–705	CORROSION TEST STATION BELOW GRADE INSTALLATION
W–706	CORROSION TEST STATION ABOVE GRADE INSTALLATION
W–707	SPLICING DETAIL
W–708	PERMANENT REFERENCE ELECTRODE INSTALLATION
W–709	JUNCTION BOX
W–710	TYPES OF CORROSION TEST STATIONS
W–800	BORING AND CASING
W–900	CONCRETE CYLINDER PIPE TAP
W–1801	BACKFLOW PREVENTION FOR POTABLE WATER FIRE HYDRANT OR STANDPIPE WATER SERVICE

ISSUED:		STANDARD DETAIL		DETAIL NO.
6/97	TUCSON WATER	WATER SYSTEM MODIFICATION (WSM) SHEET INDEX	THE SEAL of PIMA COUNTY ARIZONA	N/A
REVISED:				
10/02				SHEET 1 OF 1

1. All water system modification construction applicable to transportation, storm drainage, and/or flood control projects shall conform to the applicable sections of the Pima County/City of Tucson Standard Specifications for Public Improvements as may be modified by the Special Provisions. All work shall be performed by a contractor licensed by the State of Arizona, as determined by the Arizona Registrar of Contractors (A, A–12, A–16).

2. Pipe materials shall comply with the requirements of the project plans, specifications, and the approved materials list of the water utility. The contractor shall keep a copy of the project plans and specifications on site at all times.

3. All water modification and/or improvement plans shall be approved and signed by Tucson Water or the appropriate water utility having jurisdiction over the system.

4. Work shall not commence until a written "NOTICE TO PROCEED" has been issued by Tucson Water or the appropriate water utility having jurisdiction over the system.

5. All applicable water system layout and cut sheets shall be provided to the water utility prior to installation of any water pipe or appurtenance.

6. The contractor shall contact "Blue Stake" two (2) working days prior to any excavation to determine accurate utility locations. The Contractor shall keep all "Blue Stake" requests up–to–date, and comply with applicable Arizona Revised Statutes pertaining to "Blue Stake". Errors in Blue Stake must be reported to the Engineer immediately.

7. The backfill material, compaction and pavement patch shall be in accordance with Section 510 of the Pima County/City of Tucson Standard Specifications for Public Improvements or, the requirements of the authority that has jurisdiction over the right–of–way whichever is more severe. The inspector has been authorized to assure compliance with the other authorities requirements.

8. Only the plans approved by the water utility shall be used for the installation of water facilities. Approved plans requiring revision shall be approved by the water utility prior to start of the revised work.

9. The project will not be accepted if it includes any work that is not shown on approved plans, revisions or otherwise approved by the water utility.

10. Final acceptance of water system modifications will not be granted until any required microbiological test results have been received and found acceptable.

11. SALVAGED AND ABONDONED MATERIALS:

    A. Salvage of Abandoned Valve Boxes

        1. Unpaved areas:

        Concrete collars shall be totally broken, removed and disposed of off the job site. Valve boxes and lids shall be salvaged. Riser pipe shall be cut a minimum of 15 inches (380 mm) below finish grade. Surplus and/or broken asbestos cement pipe shall be disposed of in accordance with paragraph 'C'.

        The riser shall be backfilled with aggregate base course. All areas of unpaved ground disturbed by this salvage operation shall be backfilled with aggregate base course compacted to a minimum of 95% of the maximum density as determined in accordance with the requirements of the applicable test methods of the ADOT Materials Testing Manual, as directed and approved by the Engineer. The area shall be left in an undisturbed manner as it was prior to these operations.

2. Paved Areas:

A square 2 feet 6 inches (760 mm) X 2 feet 6 inches (760 mm) minimum shall be saw cut around the valve box and lid. The concrete collar shall be totally broken and removed. The valve box and lid shall be salvaged. Risers shall be cut a minimum of 15 inches (380 mm) below finish grade. Broken cement–asbestos material shall be disposed of in accordance with paragraph 'C' herein. The riser shall be filled with aggregate base course. The area disturbed by this salvage operation shall be backfilled with aggregate base course compacted to the minimum density specified in Subsection 923–2 of the Pima County, City of Tucson Specifications for Public Improvement and brought up to match the bottom of the asphalt pavement. This square shall then be patched per Section 923. The contractor shall provide a smooth patch to the satisfaction of the Engineer. If the pavement patch is unacceptable it shall be removed and replaced at no additional cost to the Agency.

3. Delivery:

The contractor shall prepare a detailed list of all items to be salvaged. The list shall specify the project name, project/plan number and the name of the contractor. Prior to removal of the salvaged items from the project, the list will be given to the Engineer or deisgnated representative for review and approval. Once approved, the Engineer will sign and date the list. Upon delivery to the water utility's yard, the list will be signed, dated and kept by the utility's representative. A copy of this signed and dated list shall be given to the Engineer.

B. Lead Services and Fittings

All lead services and fittings encountered shall be removed by the contractor and replaced with materials contained in the water utility's approved materials list or as directed by the Engineer. Payment of this work, if not included in the bid schedule, shall be in accordance with Subsection 109–5 of the Standard Specifications.

C. Cement–Asbestos Pipe Handling and Transfer

The contractor shall be responsible for the proper removal, transfer and disposal of cement–asbestos pipe from the construction site in accordance with Subsection 510–3.02 of the Standard Specifications.

D. Delivery of Salvaged Tucson Water System Material

All valves, valve boxes, fire hydrants, corrosion test stations, air release assemblies, and fittings removed by the contractor from a Tucson Water abandoned water main system shall be delivered to and unloaded by the contractor at Tucson Water Plant #1, 501 W. 18th Street between the hours of 8:00 a.m. to 2:00 p.m. Tucson Water employees will not unload salvaged items for the contractor. The contractor shall provide 24 hours notice to Distribution Support Services Section, (520) 791–4023 before delivering said salvaged items.

Prior to delivery, The contractor shall develop a list of salvaged items. The list shall have the name of the project, contractor, and plan number. The Engineer will sign and date the list. The salvaged items shall be delivered to Tucson Water Plant #1. The list of salvaged items will be signed, dated and kept by the Tucson Water representative upon receipt of the items. A copy of the list must be given to the Water Project Inspector by the contractor.

All valves, valve boxes, fire hydrants, corrosion test stations, and fittings shall be devoid of dirt, concrete or cement asbestos material before delivery to Tucson Water Plant #1.

12. DAMAGE TO EXISTING UTILITIES

Utility locations shown on the Plans are for informational purposes only.

Utility information has been obtained from utility maps, field survey work and from descriptions provided by the various agencies involved and represents the best information available. The Agency does not guarantee the accuracy or completeness of this information and it is to be understood that other facilities not shown on the drawings may be encountered during the course of the work.

In accordance with Arizona Revised Statute 40–360–21, the contractor shall contact all utilities in order to determine the location of their respective facilities within the limits of the project prior to any excavation. The contractor shall be responsible for any damages to existing utilities and shall be responsible for any necessary repairs at no additional cost to the Agency.

The contractor shall contact "Blue Stake", (800)782–5348 two working days prior to any excavation to determine accurate utility locations. The contractor shall keep all "Blue Stake" requests up–to–date, and shall comply with applicable Arizona Revised Statutes pertaining to "Blue Stake".

13. SUBMITTALS

Submittals for Tucson Water system modifications shall include the approved Plan Number.

14. Personnel of the approved water utility shall be authorized to inspect all work completed and materials furnished. Such inspection may extend to all or any part of the work and to the preparation, fabrication or manufacture of the materials to be used.

Items of work requiring approval prior to being backfilled or otherwise concealed by the contractor, include but are not limited to trench depth and location, pipe materials and installation, pipe fittings and installation, thrust restraints, fire hydrant installation, temporary plugs, taps and tie–ins, services, drain assembly, bedding, and detectable and marking tape installation.

Any work done or materials used without approval by the Engineer may be ordered uncovered and removed or replaced at the contractor's expense even if the uncovered work is determined to be acceptable.

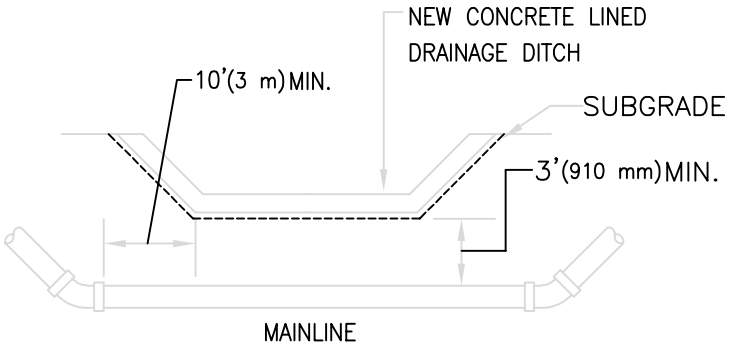

CONCRETE LINED DITCH

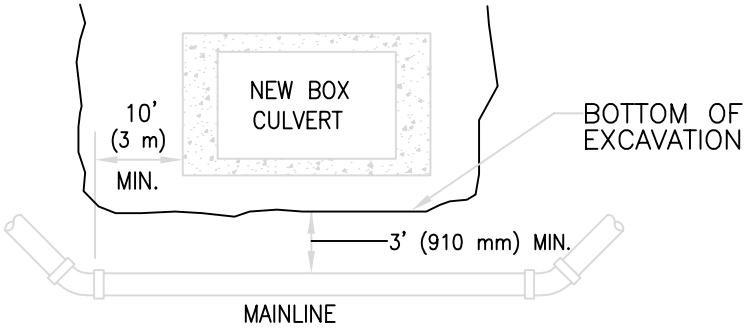

BOX CULVERT

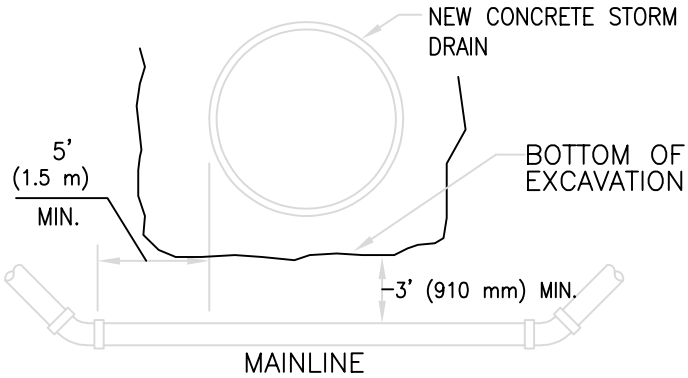

CONCRETE STORM DRAINS

NOTES:

1. MAINLINE WATER PIPE BENEATH NEW DRAINAGE FACILITIES SHALL BE DUCTILE IRON. ELEVATION DIFFERENTIALS SHALL BE ACCOMPLISHED BY USING VERTICAL BENDS. DUCTILE IRON PIPE SHALL EXTEND FROM TOP VERTICAL BEND TO TOP VERTICAL BEND. USE OF PVC PIPE SHALL BE EVALUATED ON CASE BY CASE BASIS.
2. THRUST RESTRAINT CONSIDERATIONS FOR VERTICAL BENDS SHALL BE IN ACCORDANCE WITH STANDARD DETAIL W-610.
3. WATER MAINS BELOW NEW MULTIPLE CONCRETE STORM DRAINS OR CMP'S OR UNSTABILIZIED DRAINAGE CHANNELS/ DITCHES SHALL BE EVALUATED ON A CASE BY CASE BASIS.
4. ALL JOINTS UNDER FACILITIES SHALL BE RESTRAINED.

ISSUED:		STANDARD DETAIL		DETAIL NO.
6/97	TUCSON WATER	WSM NEW DRAINAGE FACILITY CROSSING DETAILS	THE SEAL of PIMA COUNTY ARIZONA	W-107
REVISED:				
10/02				SHEET 1 OF 1

CUSTOMER NOTIFICATION

The contractor shall be responsible for maintaining service to all water customers during construction.

Connections or tie–ins to the existing water system will not be permitted on any weekday prior to 9:00am or after 10:30am or on any Saturday or Sunday unless prior approval has been obtained in writing from the water utility. A tap or connection to the existing system without prior notice to the water utility may result in a fine being levied against the contractor.

Should the new construction require the water to be shut–off to make connections or tie–ins to the existing system, the contractor shall provide the water utility with a written schedule of the proposed tie–ins or connections a minimum of 48 hours prior to the start of such work. The water system shall not be turned off until all affected water users have been notified by the contractor of the schedule. Notification by information card shall be made no less than twenty–four (24) hours before water is to be turned off. All system "shut downs" must be coordinated with the water utility. Information cards will be supplied by the water utility.

In the event of damage to an existing water main, the contractor shall immediately notify the Engineer and the water utility. Water utility personnel will close all valves necessary to effect repairs. Emergency repairs made by the contractor shall be performed under the supervision of the utility provider. If the contractor fails to accomplish repairs, within a reasonable time period, water utility personnel will do the work and the contractor shall be charged for all costs incurred.

LEGEND:

D OUTSIDE DIAMETER OF PIPE.

D+18 INCHES (455 mm) MINIMUM AND D+24 INCHES (610 mm) MAXIMUM.

4 INCHES (100 mm) FOR PIPE DIAMETERS 12 INCHES (300 mm) AND SMALLER;
6 INCHES (150 mm) FOR PIPE DIAMETERS LARGER THAN 12 INCHES (300 mm)
EXCEPT WHEN ON UNYIELDING OR UNSTABLE MATERIAL, THEN AS PER
STANDARD SPECIFICATION SUBSECTION 510–3.01.

DIMENSIONS NOTED ARE AFTER INSTALLATION OF PIPE.

NATIVE UNDISTURBED SOIL

TRENCH BACKFILL MATERIAL (STD. SPEC. SECTION 510, 2.05)

BEDDING MATERIAL (STD. SPEC. SUBSECTION 510–2.04)

NOTES:

1. Construction staking shall be in accordance with Standard Detail W–105.
2. Pipe shall be installed in a trench condition in natural ground. In no case shall pipe be installed with less than 36"(910 mm) of cover during construction.
3. Bracing and/or sloping shall conform to OSHA requirements.
4. The minimum depth for new water mains and service lines shall be in accordance with the project plans.
5. Refer to Standard Specification Section 510 for gradation and compaction requirements for backfill material.
6. Refer to Standard Specification Section 510 for gradation and compaction requirements for bedding material.
7. Refer to Standard Specification Section 510 for requirements for detectable pipe locating and marking tape.
8. Pavement patching shall conform to the requirements of Standard Detail 216.

ISSUED:		STANDARD DETAIL		DETAIL NO.
6/97	TUCSON WATER	WSM PIPE BEDDING AND TRENCH BACKFILL	THE SEAL of PIMA COUNTY ARIZONA	W–115
REVISED:				
10/02				SHEET 1 OF 2

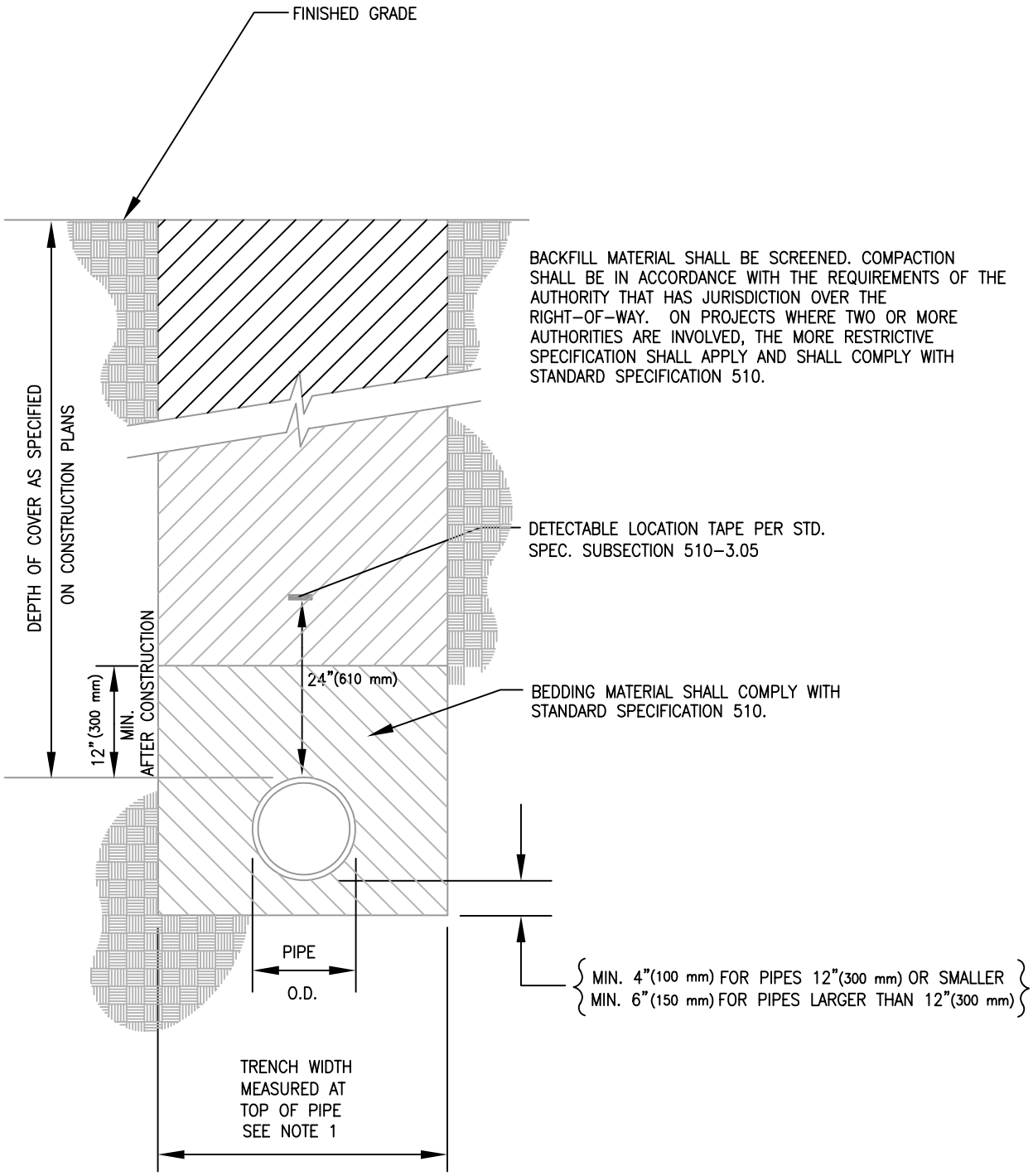

1. TRENCH WIDTH MEASURED AT THE TOP OF THE PIPE SHALL BE 18" (455 mm) FOR 4"(100 mm) AND 6" (150 mm) MAINS, AND 24" (610 mm) FOR 8"(200 mm) MAINS. TRENCH WIDTH FOR 12" (300 mm) AND LARGER SHALL BE O.D. + 18" (455 mm) MIN., O.D. + 24" (610 mm) MAX.

ISSUED:		STANDARD DETAIL		DETAIL NO.
6/97	TUCSON WATER	WSM PIPE BEDDING AND TRENCH BACKFILL	THE SEAL of PIMA COUNTY ARIZONA	W-115
REVISED:				
10/02				SHEET 2 OF 2

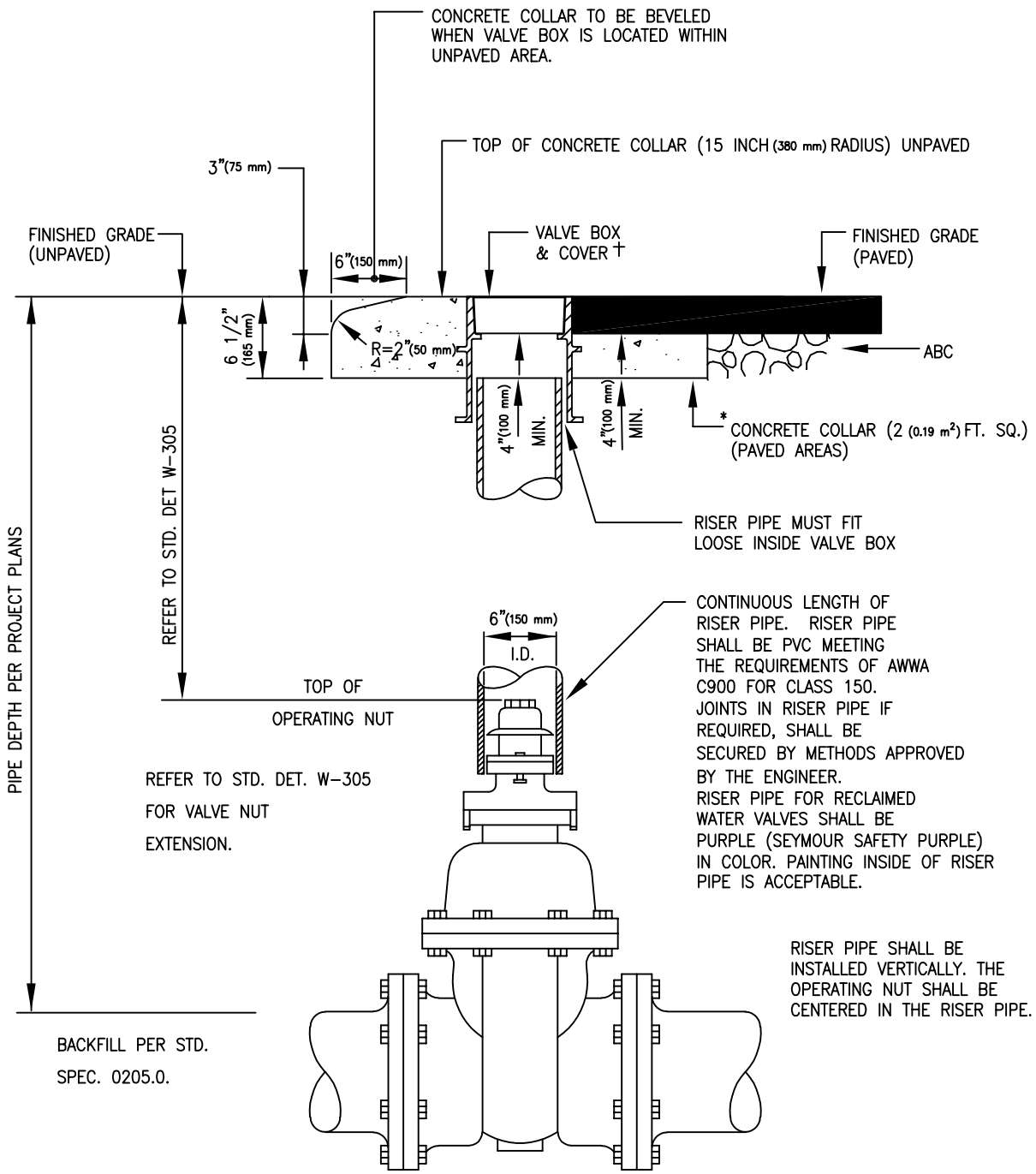

* CONCRETE COLLAR TO EXTEND TO FINISHED GRADE WHEN INSTALLED IN CONCRETE PAVEMENT.
1/2"(13 mm) BITUMINOUS JOINT MATERIAL SHALL BE INSTALLED BETWEEN CONCRETE COLLAR AND CONCRETE PAVEMENT.

† USE VALVE BOX AND COVER APPROPRIATE TO THE MAIN TYPE (I.E. POTABLE OR RECLAIMED).

ISSUED:		STANDARD DETAIL		DETAIL NO.
6/97	TUCSON WATER	WSM VALVE BOX INSTALLATION	THE SEAL of PIMA COUNTY ARIZONA	W-300
REVISED:				
10/02				SHEET 1 OF 4

ALL MATERIAL SHALL BE CAST IRON PER ASTM. A-48, CLASS 30 B.

THE SURFACES OF THE COVER AND BOX WHICH COME IN CONTACT WITH EACH OTHER MUST BE SMOOTH AND FREE OF ALL CASTING RIDGES AND BURRS TO PROVIDE A SNUG FIT.

THE VALVE BOX SHALL HAVE A ROUND BOTTOM TO ACCOMMODATE RISER PIPE. THE TOP OF THE VALVE BOX SHALL BE SQUARE.

THE LID AND INSIDE AND OUTSIDE OF THE RISER PIPE SHALL BE COLORED PURPLE. COLOR MAY BY INCORPORATED INTO PIPE DURING MANUFACTURE OR PAINTED ONTO PIPE SURFACE. WHEN PAINTED THE PAINT SHALL BE SEYMOUR SAFETY PURPLE.

LETTERING SHALL BE RESTRICTED TO THAT SHOWN ON THE VALVE BOX COVER.

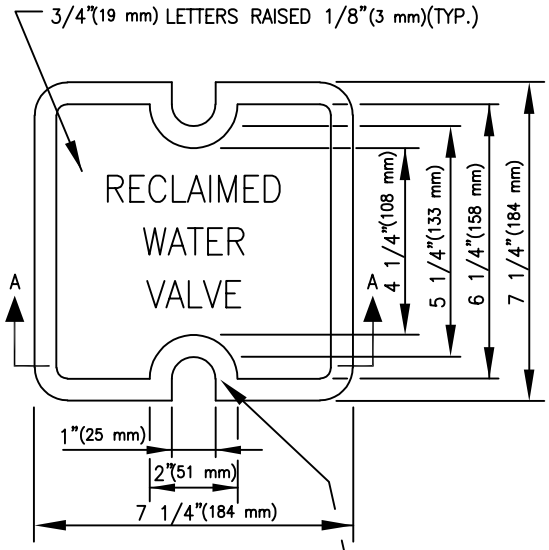

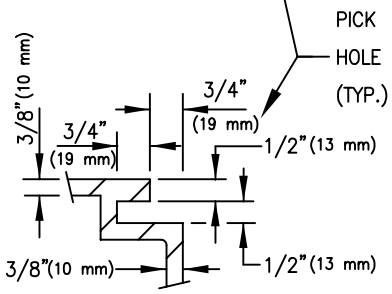

SECTION

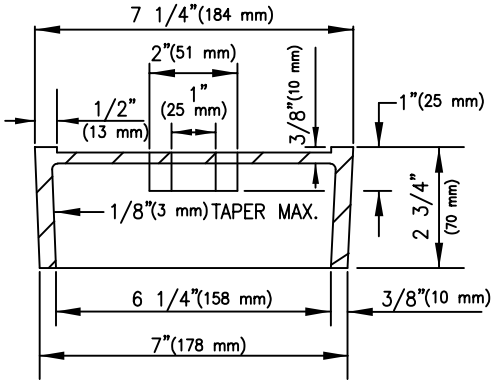

SECTION A-A
COVER

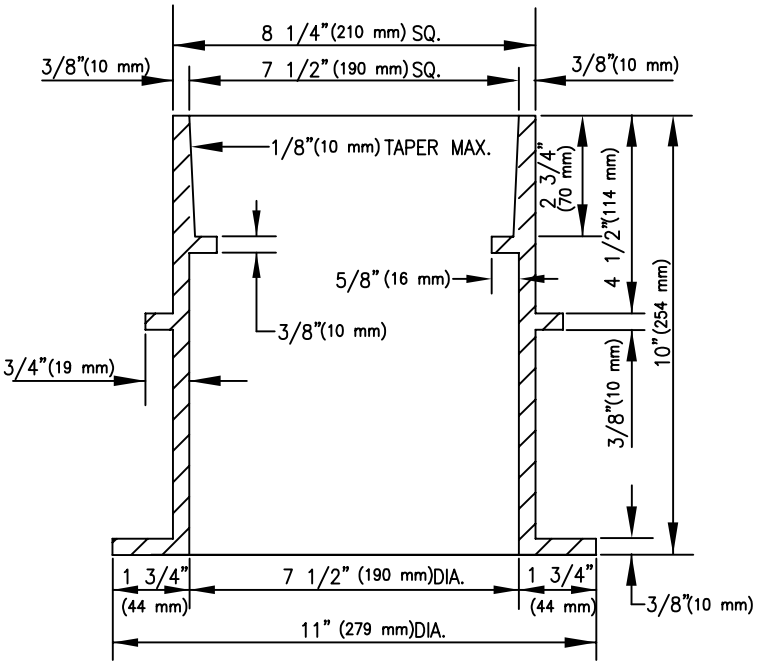

SECTION
VALVE BOX

RECLAIMED WATER
VALVE BOX AND COVER

ISSUED:		STANDARD DETAIL		DETAIL NO.
6/97	TUCSON WATER	WSM VALVE BOX INSTALLATION	THE SEAL of PIMA COUNTY ARIZONA	W-300
REVISED:				
10/02				SHEET 2 OF 4

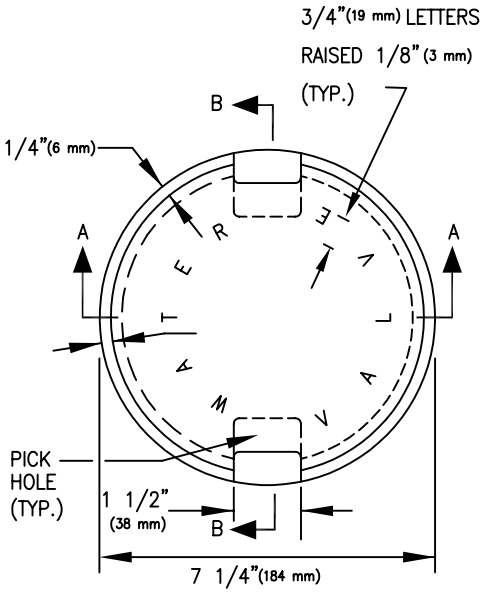

ALL MATERIAL SHALL BE CAST IRON PER ASTM. A-48, CLASS 30 B.

THE SURFACES OF THE COVER AND BOX WHICH COME IN CONTACT WITH EACH OTHER SHALL BE SMOOTH AND FREE OF ALL CASTING RIDGES AND BURRS TO PROVIDE A SNUG FIT.

THE COVER AND BOX SHALL WEIGH 50 POUNDS (22 kg) ± 5 POUNDS (2.3 kg).

THE VALVE BOX COVER SHALL ROTATE 360° IN THE BOX CASTING WITHOUT BINDING.

LETTERING SHALL BE RESTRICTED TO THAT SHOWN ON THE VALVE BOX COVER.

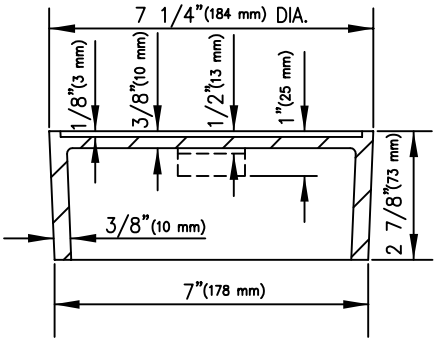

SECTION A-A
COVER

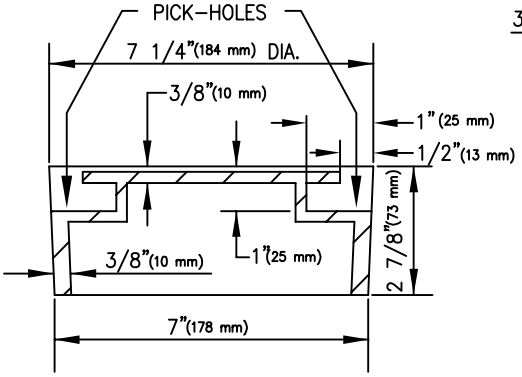

SECTION B-B
COVER

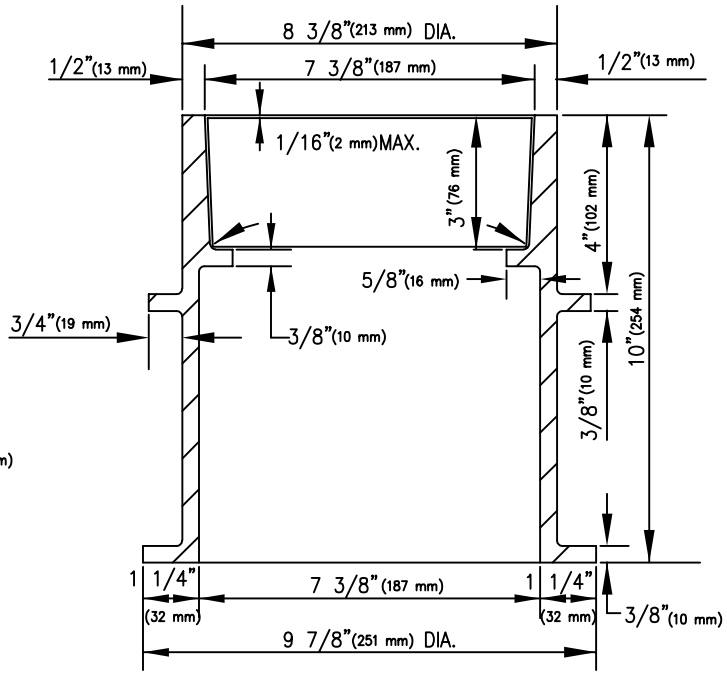

SECTION
VALVE BOX

POTABLE
WATER VALVE
BOX AND COVER

ISSUED:		STANDARD DETAIL		DETAIL NO.
6/97	TUCSON WATER	WSM VALVE BOX INSTALLATION	THE SEAL of PIMA COUNTY ARIZONA	W-300
REVISED:				
10/02				SHEET 3 OF 4

ADJUSTING EXISTING VALVE BOX AND COVER

1. The contractor shall protect all existing water valve boxes and covers during the course of the work.

2. The contractor shall adjust existing water main valve boxes and covers to the level of the finished surface of the new pavement.

3. Unless otherwise specified on the project plans or in the Special Provisions, the contractor shall supply new water valve boxes and covers for all work under this contract.

ISSUED:		STANDARD DETAIL		DETAIL NO.
6/97	TUCSON WATER	WSM VALVE BOX INSTALLATION	THE SEAL of PIMA COUNTY ARIZONA	W-300
REVISED:				
10/02				SHEET 4 OF 4

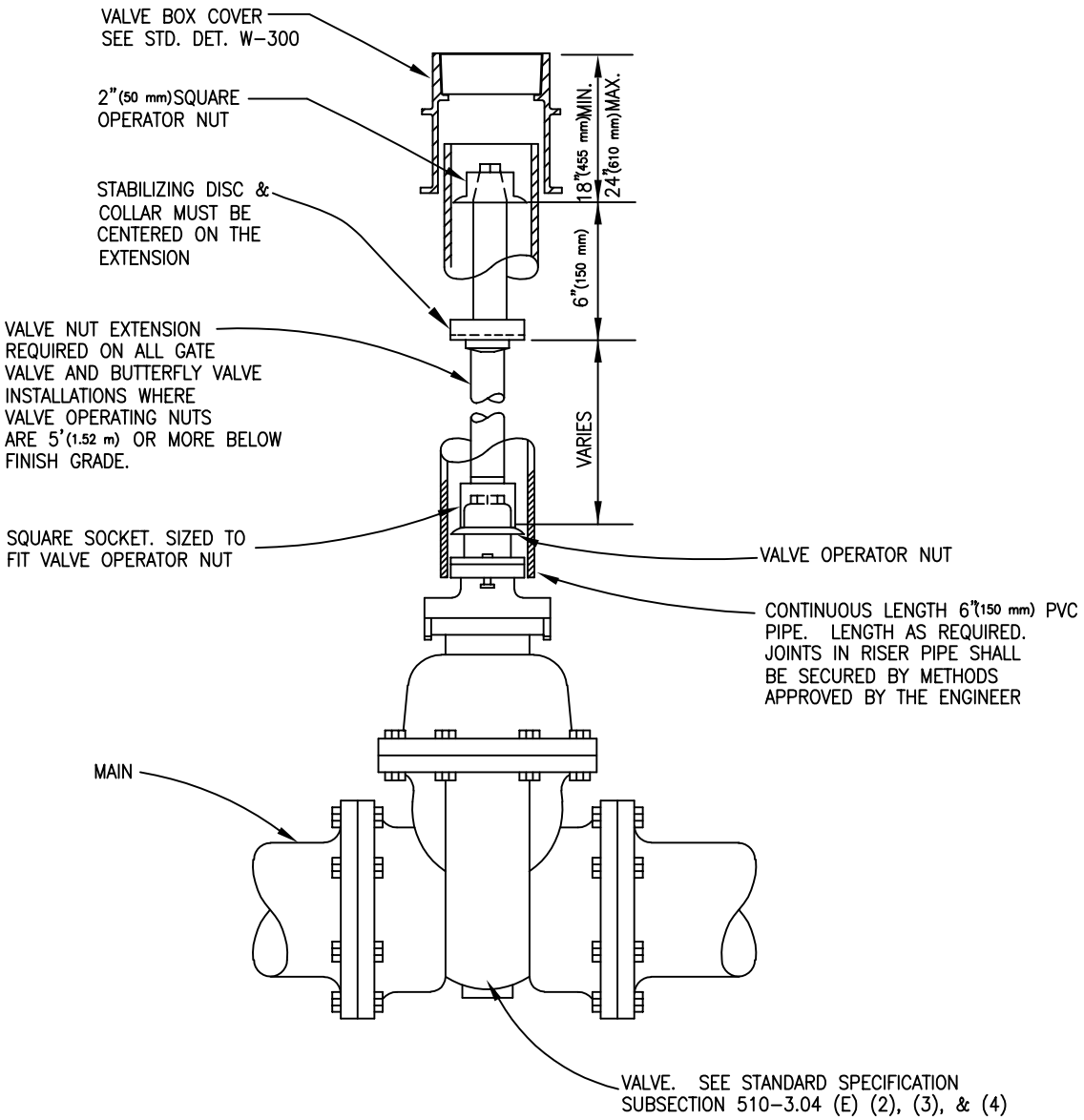

NOTES:

1. Operator nut, valve nut extension, disc & collar & square socket shall all be centered vertically over valve operator nut.

2. Nut extensions to be supplied by the water utility.

3. Extensions over 12 feet (3.7 m) need to have a stabilizer ring centered on the extension. It should be 1/4" (6 mm) thick by 5-1/2" (140 mm) in diameter.

4. Valve nut extensions shall be of continuous length unless approved by the Engineer.

ISSUED:		STANDARD DETAIL		DETAIL NO.
6/97	TUCSON WATER	WSM VALVE NUT EXTENSION	THE SEAL of PIMA COUNTY ARIZONA	W-305
REVISED:				
10/02				SHEET 1 OF 2

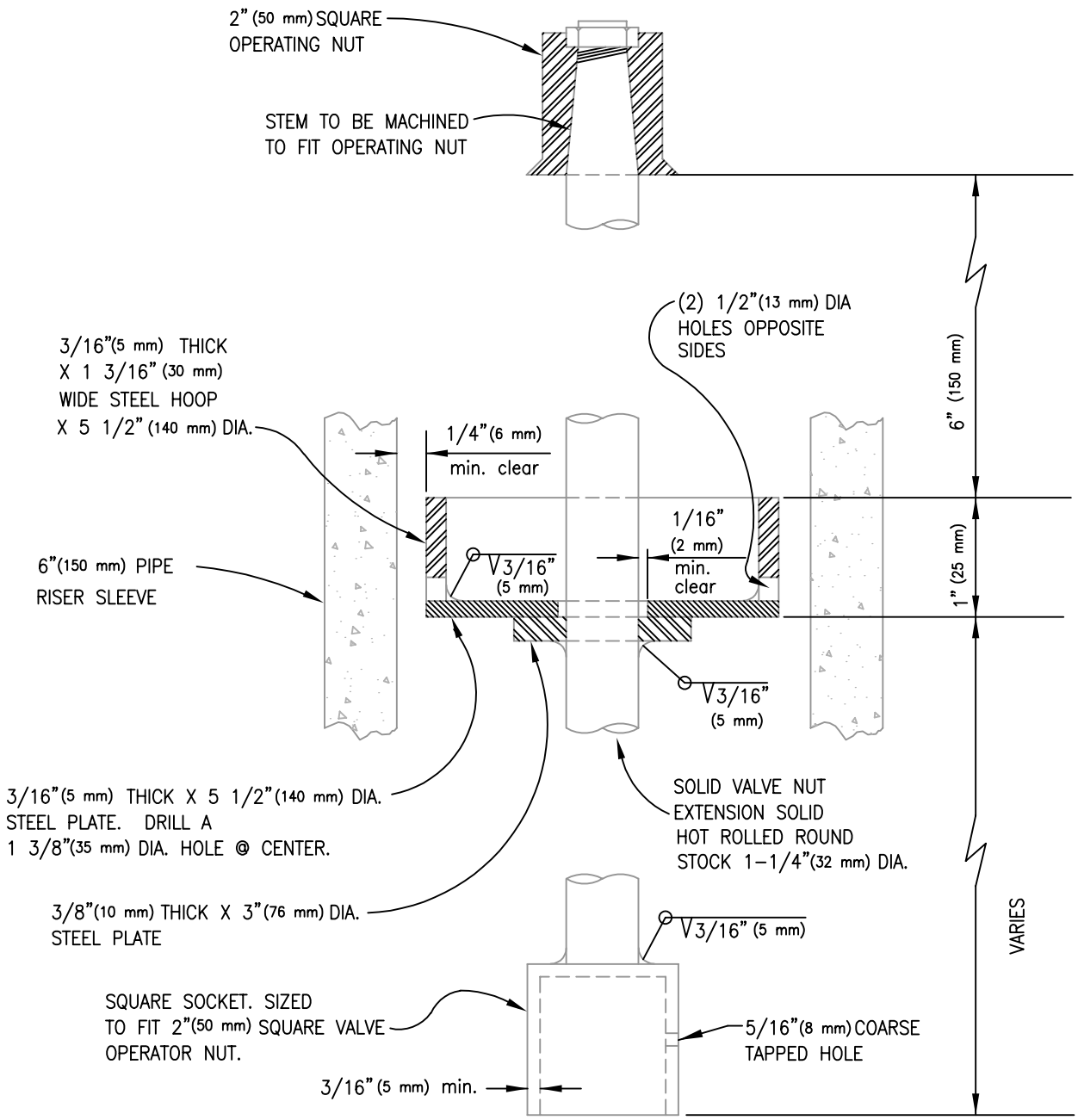

DETAILS

ISSUED:		STANDARD DETAIL		DETAIL NO.
6/97	TUCSON WATER	WSM VALVE NUT EXTENSION	SEAL of PIMA COUNTY ARIZONA	W-305
REVISED:				
10/02				SHEET 2 OF 2

WATER SERVICE NOTES

NOTES:

1. Meter boxes shall be set on two 2" x 4" x 12" (50 x 100 x 300 mm) roman bricks installed under the long axis sides of the box. The meter stop shall be installed at 8"(200 mm) min./10"(250 mm) max. below finished ground surface. Number 3 boxes require 4 bricks.

2. Installation of concrete meter boxes in areas subjected to vehicular traffic shall be avoided. All 3/4"(19 mm) and 1"(25 mm) meter installations in concrete or pavement require a 12" x 20" x 12"(300 x 500 x 300 mm) Rotocast box with concrete encasements and steel lid (H20 rated). An H-20 rated lid is to be used in areas subject to vehicular traffic. A pedestrian rated lid is to be used in all other installations.

3. The top of the meter box shall be set 1/2 inch(13 mm) to 1 inch(25 mm) above grade except in concrete sidewalks, driveways, and paved areas where the meter box shall be set flush with the surrounding surface.

4. If obstructions prevent the meter box from being installed at the locations shown on the plans, the water utility will evaluate alternate locations on a case by case basis.

5. All service lines require detectable location tape and a tracer wire. The tape is to be installed 6"(150 mm) above the service line. The tracer wire shall be USE, RHW or RHH solid 10 gauge (6 mm) a continuous length from the corporation and run in to the curb stop. The tracer wire shall be attached with tape or wire ties at 1'(300 mm) intervals to the service line. A minimum 6" (150 mm) coiled wire shall be left at the curb stop.

6. All service lines will be bedded and backfilled using the same materials and methods as the main line.

7. All service taps will be at a 45° angle and must face the property where the meter will be installed. Multiple taps on PVC shall be in accordance with Note 11.

8. When using HDPE a support post must be installed in accordance with Standard Details W-310, W-311 and W-312.

9. All meter box installations will initially have the pipe access holes (mouse holes) blocked with suitable material to prevent backfill of dirt into box.

10. A meter locating ring shall be supplied by the water utility. The contractor shall install the locating ring within 3 inches (75 mm) of the top of the angle meter stop.

11. Taps made into PVC pipe shall be at least 2 feet (610 mm) from the spigot end and 1 foot (300 mm) from the bottom of the bell; multiple taps shall be at least 30"(760 mm) apart; multiple taps within an individual section of PVC pipe shall not be located on the same axis. The minimum offset shall be 5 degrees.

12. Taps into ductile iron pipe shall be at 45 degrees to horizontal as shown. Multiple taps can be made as close to each other as practicable. Taps shall be a minimum of 2'(610 mm) from the spigot and a minimum of 1"(25 mm) from the bell.

ISSUED:		STANDARD DETAIL		DETAIL NO.
6/97	TUCSON WATER	WSM WATER SERVICE NOTES	THE SEAL of PIMA COUNTY ARIZONA	W-309
REVISED:				
10/02				SHEET 1 OF 1

METER SIZE	BOX TYPE	STD. DET. NO.
3/4 (20 mm) INCH	NO. 1, NO. 2	W–309, W–318
1 (25 mm) INCH	NO. 1, NO. 2	W–309, W–318

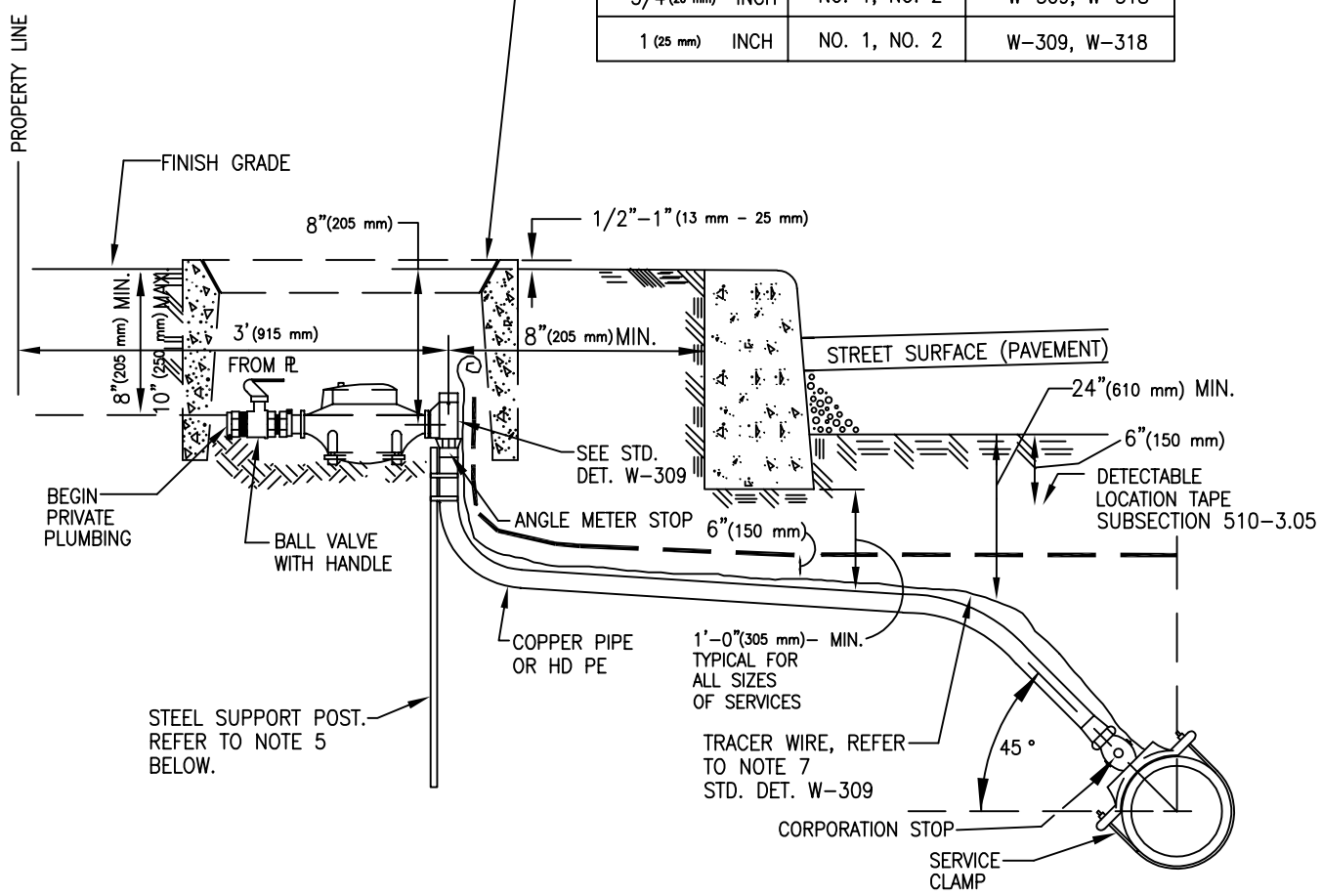

NOTES:

1. Meter box shall be supported by two 2" x 4" x 12"(50 X 100 X 300 mm) roman bricks installed under the long axis sides of the box.
2. Private plumbing must be adjusted to match meter elevation.
3. If meter box is located in a sidewalk area, the box shall be installed adjacent to back of curb.
4. For D.I.P. refer to Note 4 of Standard Detail W–309.
5. When using HDPE, a steel support post must be used for support. The steel support post shall be a No. 5 rebar. Secure serviceline to post with nylon zip ties. The post shall be a minimum of 4' (1.2 m) in length to support the curb stop.
6. Meter box installation in new sidewalk areas shall be evaluated on a case by case basis.

ISSUED:		STANDARD DETAIL		DETAIL NO.
6/97	TUCSON WATER	WSM WATER SERVICE CONNECTIONS 3/4 INCH (20 mm) AND 1 INCH (25 mm) SINGLE	THE SEAL of PIMA COUNTY ARIZONA	W–310
REVISED:				
10/02				SHEET 1 OF 1

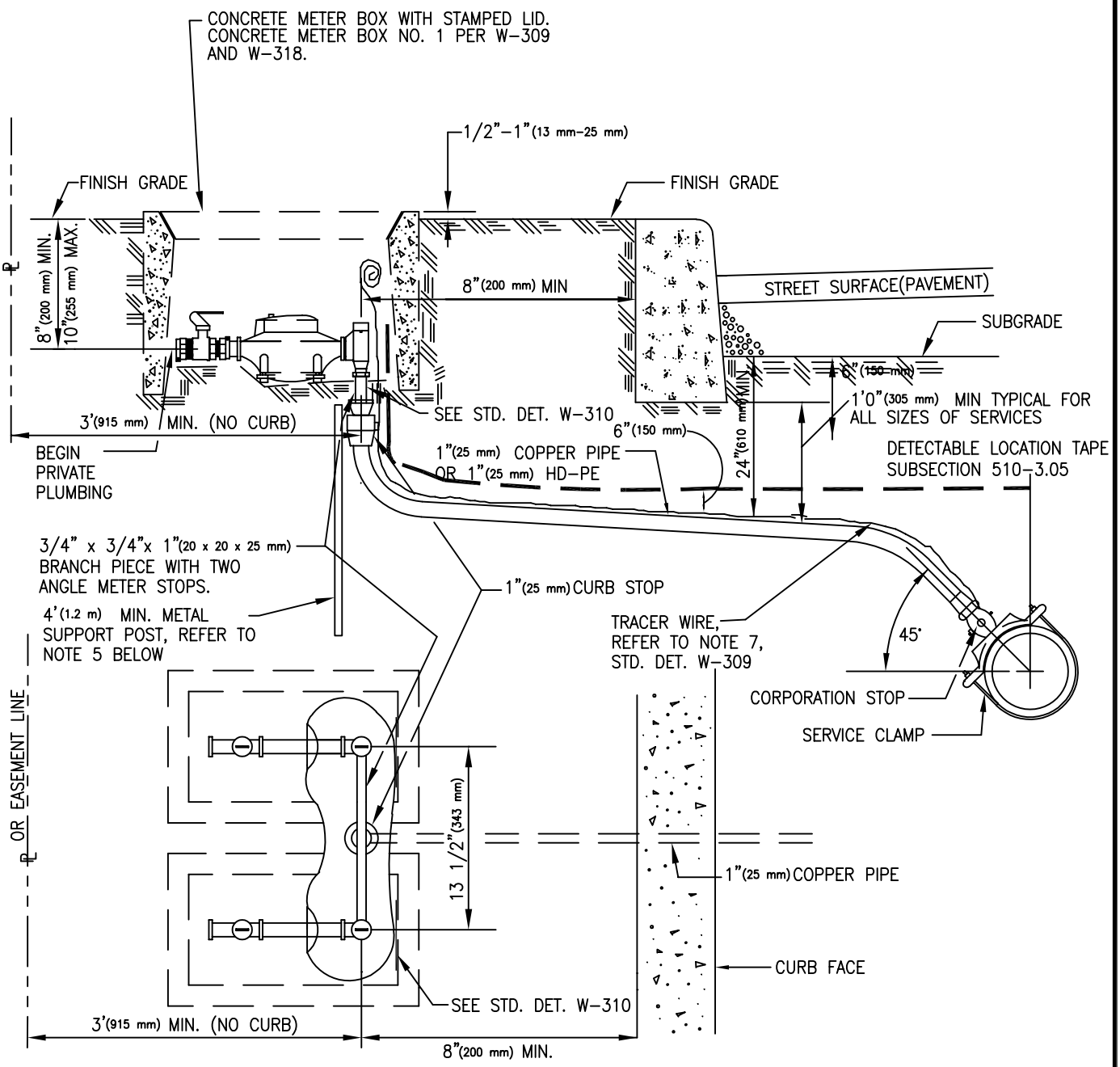

NOTES

1. Meter box shall be supported by two 2" x 4" x 12"(50 x 100 x 300 mm) solid roman bricks installed under the long axis sides of the box.
2. Private plumbing must be adjusted to match new meter elevation.
3. If meter box is located in sidewalk area, the box shall be installed adjacent to back of curb.
4. For D.I.P., refer to Note 4, Std. Det. W-309.
5. When using HDPE, a steel support post must be used for support. The steel support post shall be a No. 5 rebar. Secure serviceline to post with nylon zip ties.
6. Meter box installation in new sidewalk areas shall be evaluated on a case by case basis.

ISSUED:		STANDARD DETAIL		DETAIL NO.
6/97	TUCSON WATER	WSM 1 INCH (25 mm) SPLIT SERVICE CONNECTIONS	THE SEAL of PIMA COUNTY ARIZONA	W-311
REVISED:				
10/02				SHEET 1 OF 1

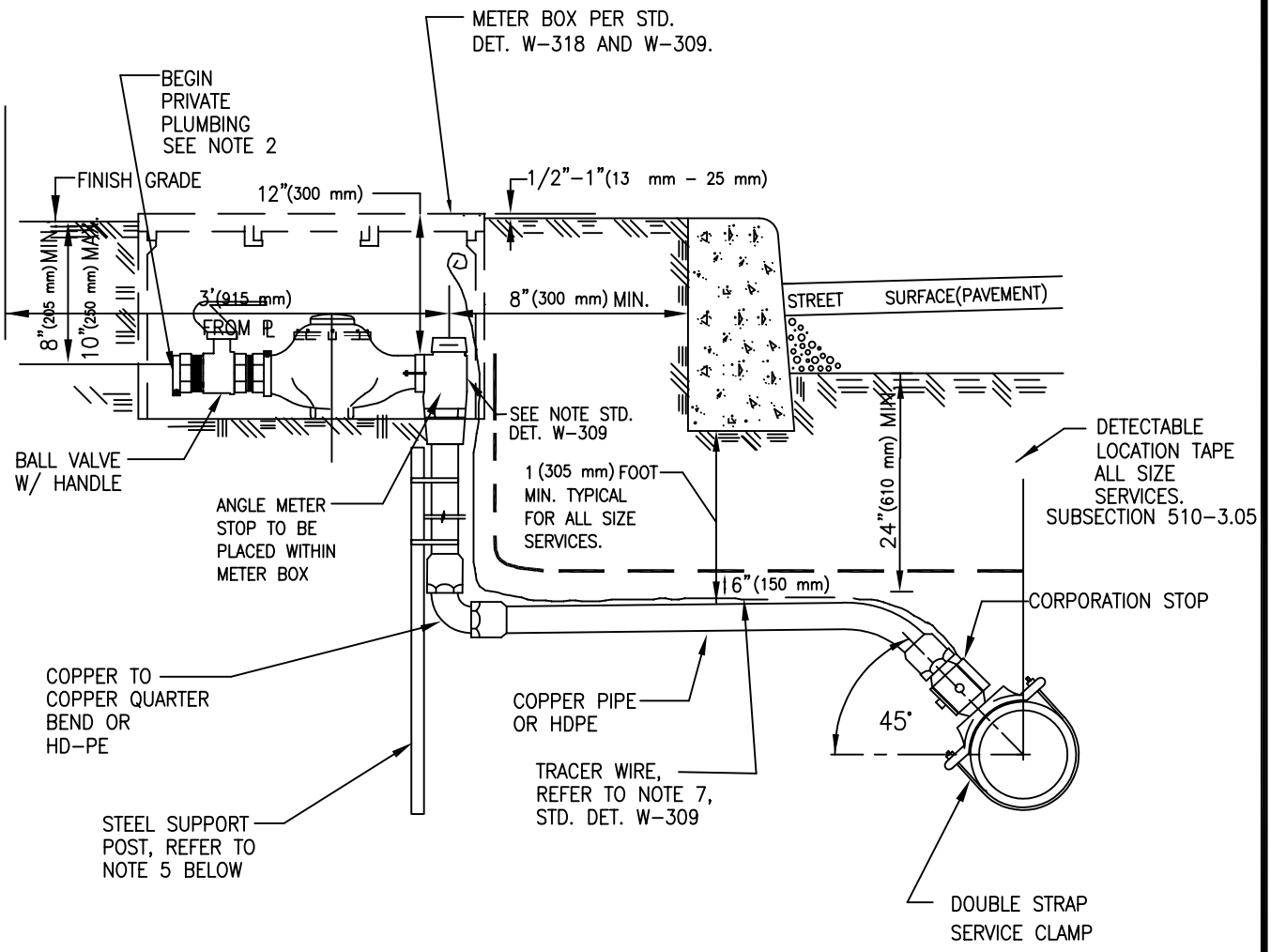

NOTES:

1. Meter box shall be supported by two 4" x 8" x 16" (100 X 200 X 400 mm) roman bricks installed under the long axis sides of the box.
2. Private plumbing must be adjusted to match new meter elevation.
3. For D.I.P. refer to Note 4 Std. Det. W-309.
4. If meter box is located in sidewalk area, the box shall be installed adjacent to back of curb.
5. When using HDPE, a steel support post must be used for support. The steel support post shall be a No. 5 rebar. Secure serviceline to post with nylon zip ties. The post shall be a minimum of 4' (1.2 m) in length to support the curb stop.
6. Meter box installation in new sidewalk areas shall be evaluated on a case by case basis.

METER SIZE	BOX TYPE	STD. DET. NO.
1 1/2 & 2" (40 mm & 50 mm)	NO. 3	W-318

ISSUED:		STANDARD DETAIL		DETAIL NO.
6/97	TUCSON WATER	WSM WATER SERVICE CONNECTIONS 1 1/2 INCH (40 mm) AND 2 INCH (50 mm) SINGLE	THE SEAL of PIMA COUNTY ARIZONA	W-312
REVISED:				
10/02				SHEET 1 OF 1

NOTES:

1. Boring to install service lines will be permitted only if shown on the approved plans or with the approval of the Engineer.

2. Only HDPE will be allowed for services when boring is used.

3. No mechanical joints will be allowed in the bore, only fusion joints will be allowed.

4. Bore and receiving pits shall not encroach upon private property. Any landscaping or improvements damaged or moved will be repaired or replaced at the contractor's expense to the satisfaction of the Engineer.

5. Only machines manufactured for boring will be used.

6. Deviation from a straight and level bore must fall within the following parameters to be acceptable:

   HORIZONTAL: +/− 12(300 mm) INCHES
   VERTICAL: +/− 6(150 mm)INCHES

7. All bores shall begin at an elevation of 36"(915 mm) below the road subgrade and as close to the station shown on the plans as possible. If no station is shown for an existing service to be replaced, then the bore shall be as close to perpendicular as possible.

8. When boring for services is approved in lieu of trenching, the length of each bore must be set at the time of approval. Payments for trenching, backfill, saw cutting, pavement replacement and chip sealing will not be made for service lines at locations where services are installed by boring in lieu of open trenching.

ISSUED:		STANDARD DETAIL		DETAIL NO.
6/97	TUCSON WATER	WSM NOTES FOR BORING SERVICE LINES	THE SEAL of PIMA COUNTY ARIZONA	W-315
REVISED:				
10/02				SHEET 1 OF 1

REFER TO PROJECT PLANS FOR ALL SERVICE WORK INCLUDING METER RELOCATIONS, RENEWALS, ADJUSTMENT, TIE-OVERS, STUB AND ABANDONMENT

NOTE

IN ALL CASES THE CONTRACTOR SHALL RESET THE METER BOX TO FINAL GRADE IN ACCORDANCE WITH STD. DET. W-309, W-310, W-311 OR W-312

ISSUED:		STANDARD DETAIL		DETAIL NO.
6/97	TUCSON WATER	WSM SERVICE RENEWALS AND TIE-OVERS	THE SEAL of PIMA COUNTY ARIZONA	W-316
REVISED:				
10/02				SHEET 1 OF 1

NOTES:

All drilling or tapping of any watermains, new or existing, shall be done only with equipment provided with active purging facilities as required by this specification.

1. No "dry" drilling or tapping of watermains shall be permitted. Prior to any drilling, the main to be drilled shall have all entrapped air removed and water pressurized to 40 p.s.i. (280 kPa) or normal operating system pressure, whichever is higher.

2. All drilling machines and adaptors to be used to drill any new or existing main that is or will become a part of the distribution system shall be modified as shown in Standard Detail W–317 and approved for use by the Engineer prior to the start of any drilling operations. Drilling equipment without approved purging water provision shall not be utilized.

3. Purge water openings shall be a minimum of 3/4"(20 mm) for drilling holes up to and including 2"(50 mm) in diameter and 1"(25 mm) for drilling holes greater than 2"(50 mm) in diameter.

4. The purge opening shall be positioned in the bottom quadrant of the equipment when the equipment is positioned on the main to be drilled.

5. No valves shall be permitted in the purge water path. Where the contractor chooses to perform an air test to demonstrate the integrity of the drilling machine positioning prior to the start of drilling, the required drain hose may be removed from the purge water nipple and a pipe cap installed. At the completion of the air leak test and prior to the start of any drilling this pipe cap must be removed and the drain hose reinstalled.

6. The drain hose shall be full size, 3/4"(19 mm) I.D. or 1"(25 mm) I.D., and shall not exceed 50 feet (15.2 m) in length.

7. Drills and shell cutters shall be maintained sharp and of proper dimensions to minimize damage to the pipe and to preserve the integrity of the remainder of the pipe wall. Drills and shell cutters shall produce clean, even entry cuts under normal drilling machine stresses or they shall be replaced as directed by the Engineer.

8. All pipe bedding and thrust blocking shall be in place and approved by the Engineer prior to the start of drilling. Thrust and valve support blocking shall be in place for any tapping sleeve and valve and approved by the Engineer prior to the start of drilling.

9. Purge water flow shall be contained until the drilling machine boring bar is withdrawn and the new corporation cock or tapping valve closed.

10. Purge water shall be disposed of in adjacent backfill unless otherwise allowed by the Engineer.

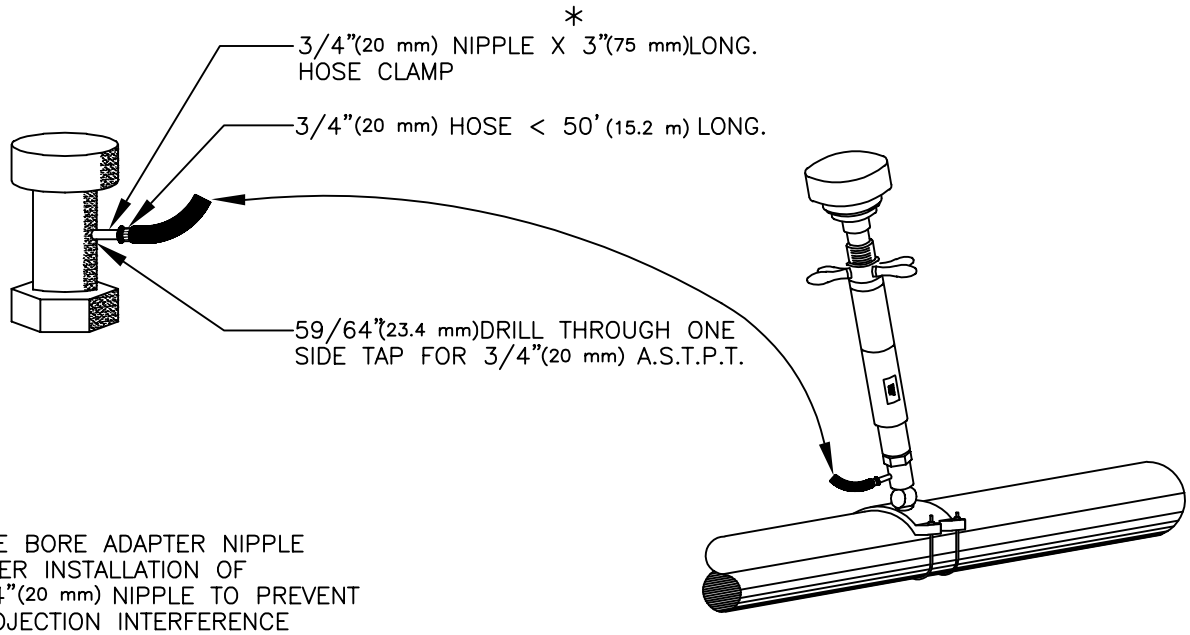

* LINE BORE ADAPTER NIPPLE AFTER INSTALLATION OF 3/4"(20 mm) NIPPLE TO PREVENT PROJECTION INTERFERENCE WITH DRILLING MACHINE BORING BAR.

DRILLING MACHINE ADAPTER NIPPLE MODIFICATIONS
2" (50 mm) Ø AND SMALLER

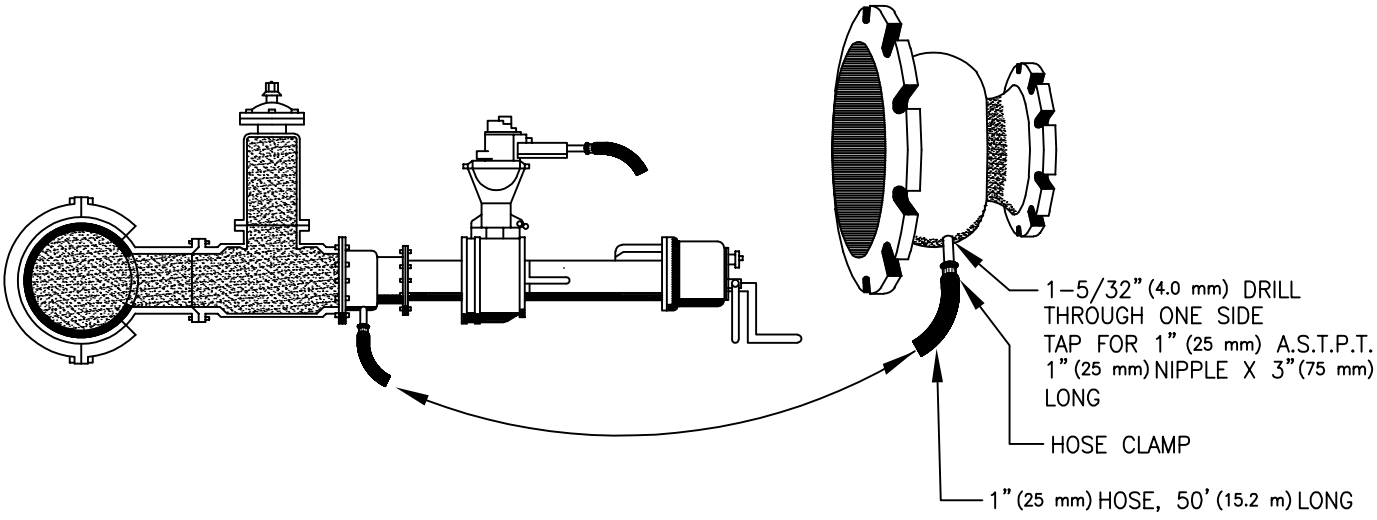

DRILLING MACHINE ADAPTER MODIFICATIONS
LARGER THAN 2" (50 mm) Ø

* FACE OFF INNER END OF 1" (25 mm) NIPPLE AFTER INSTALLATION TO PREVENT PROJECTION INTERFERENCE WITH SHELL CUTTER.

ISSUED:		STANDARD DETAIL		DETAIL NO.
6/97	TUCSON WATER	WSM PURGING OF SERVICE LINES	THE SEAL of PIMA COUNTY ARIZONA	W-317
REVISED:				
10/02				SHEET 2 OF 2

NOTES:

1. METER BOX SHALL CONFORM TO THE DIMENSIONS SHOWN.
2. METER BOX SHALL BE INSTALLED IN ACCORDANCE WITH STD. DET. W-310, W-311.
3. MATERIAL: CLASS B CONCRETE PER STANDARD SPECIFICATION SECTION 1006. PORTLAND CEMENT CONCRETE POURED AND TAMPED (OR VIBRATED) IN TRUE FORMS.
4. CUTOUTS (MOUSE HOLE) ARE NOT PLACED IN STACK BOXES.

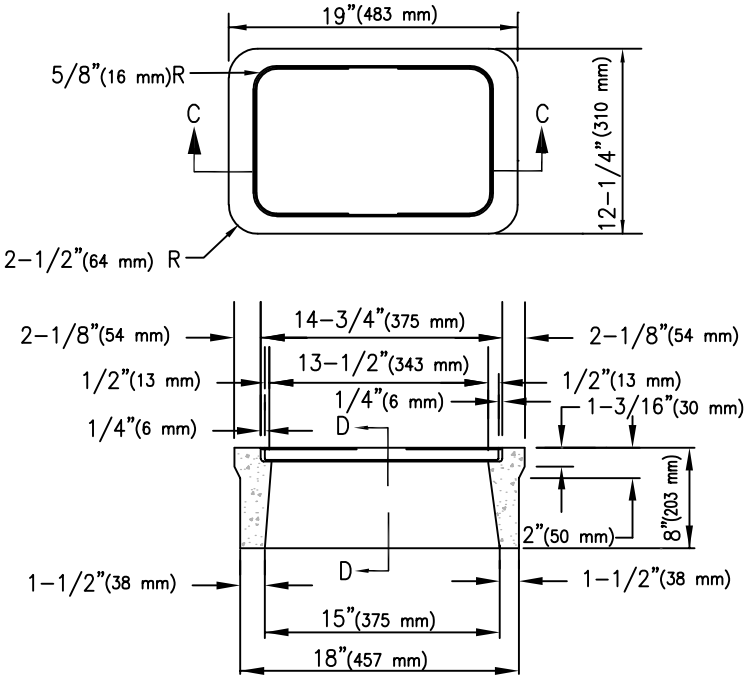

SECTION C-C

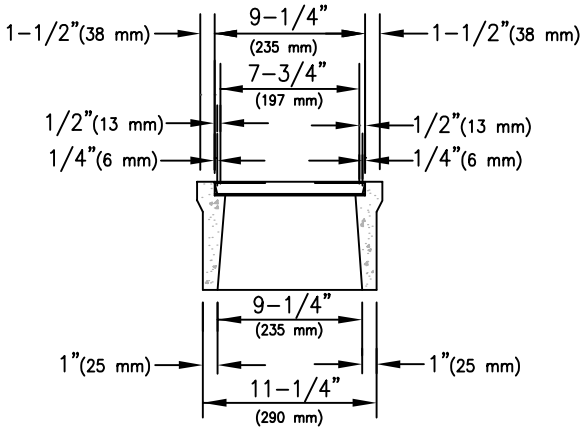

SECTION D-D

HALF BOX

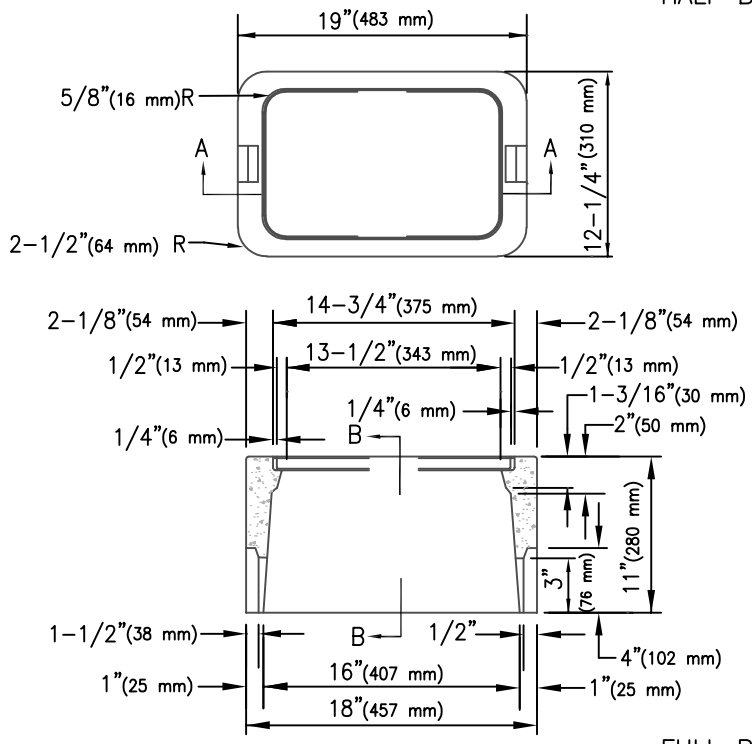

SECTION A-A

FULL BOX

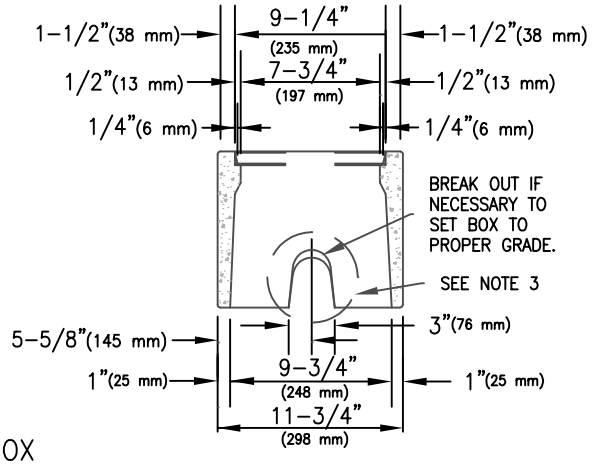

SECTION B-B

ISSUED:		STANDARD DETAIL		DETAIL NO.
6/97	TUCSON WATER	WSM METER BOX NO. 1	THE SEAL of PIMA COUNTY ARIZONA	W-318
REVISED:				
10/02				SHEET 1 OF 3

TRAFFIC RATED (H-20)

TO ACHIEVE 20K (9000 kg) LOAD RATING BOX AND FRAME SHALL BE ENCASED WITH MIN. 6" (150 mm)(MIN. 3000 PSI)(20 MPa) CONCRETE AND BOX SHALL BE INSTALLED WITH A TRAFFIC RATED (H-20) STEEL COVER.

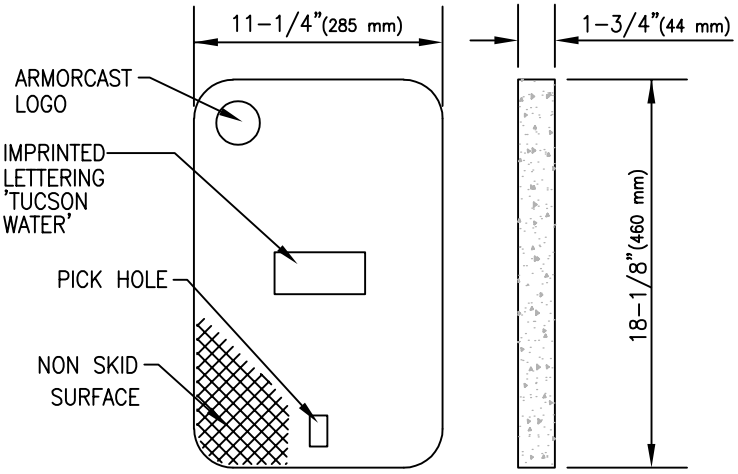

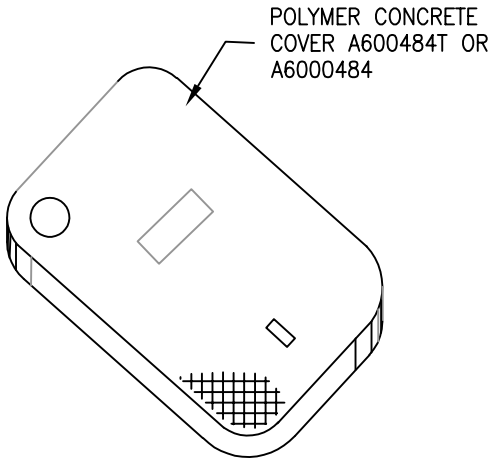

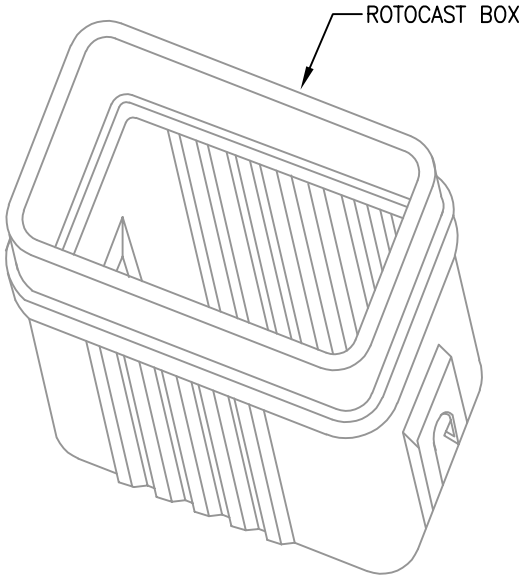

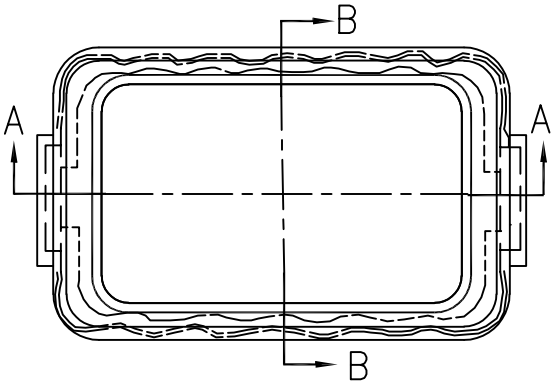

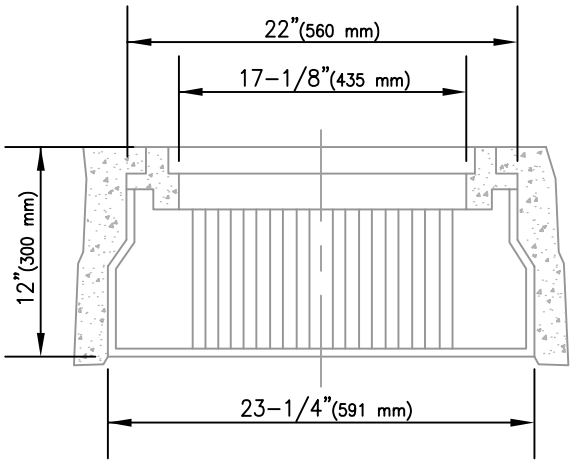

SECTION A-A

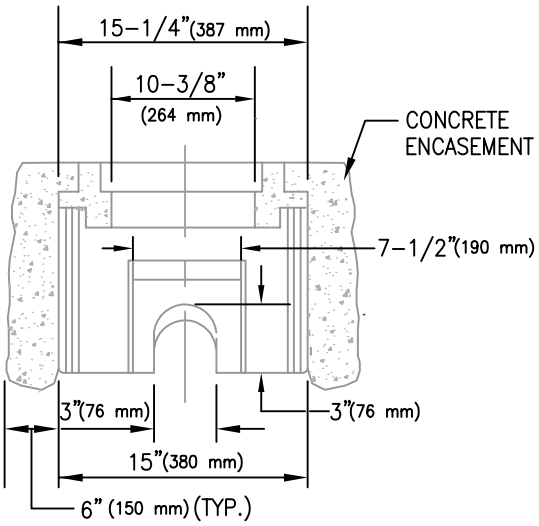

SECTION B-B

METER BOX SHALL BE INSTALLED IN ACCORDANCE WITH STD. DET. W-310, W-311

ISSUED:		STANDARD DETAIL		DETAIL NO.
6/97	TUCSON WATER	WSM METER BOX NO. 2	THE SEAL of PIMA COUNTY ARIZONA	W-318
REVISED:				
10/02				SHEET 2 OF3

ITEM	WEIGHT
INNER LID	15–20 LBS (7–9 kg)
OUTER LID	50–55 LBS (23–25 kg)
BOX SHELL	120–125 LBS (55–57 kg)

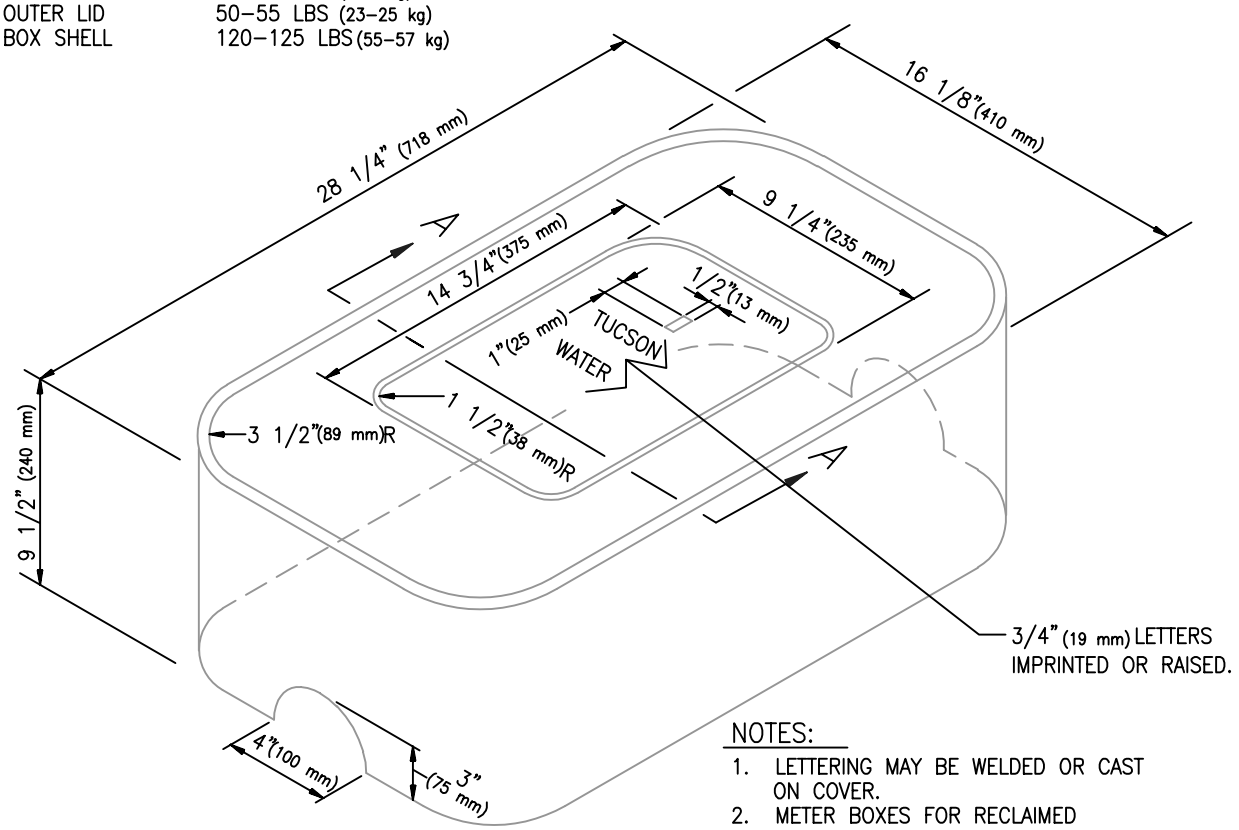

NOTES:

1. LETTERING MAY BE WELDED OR CAST ON COVER.
2. METER BOXES FOR RECLAIMED SYSTEMS SHALL INDICATE "RECLAIMED METER" ON LID THE INSIDE OF THE METER BOX AND THE ENTIRE COVER SHALL BE PAINTED PURPLE WHEN INSTALLED AS PART OF A RECLAIMED WATER SYSTEM.

1. ALL MATERIAL SHALL BE CAST IRON PER ASTM A 48, CLASS 30 B.
2. OUTER COVER DIMENSIONS, 27 1/4" x 15 1/8" x 3/8" (693 x 384 x 10 mm)
3. INNER COVER DIMENSIONS 14 1/2" x 9" x 3/8". (369 x 229 x 10 mm)

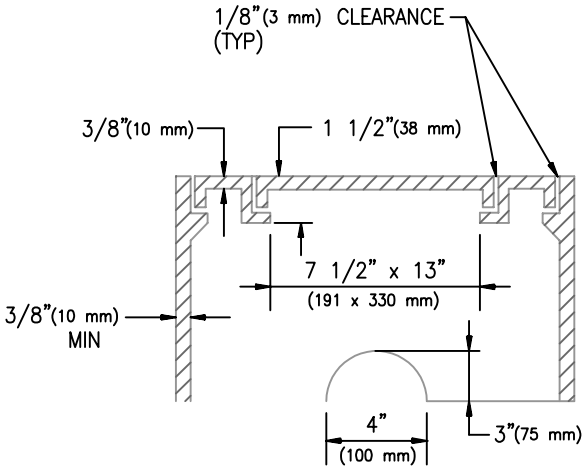

SECTION A–A

METER BOX SHALL BE INSTALLED IN ACCORDANCE WITH STD. DET. W–309 AND W–312

ISSUED:		STANDARD DETAIL		DETAIL NO.
6/97	TUCSON WATER	WSM METER BOX NO. 3	THE SEAL of PIMA COUNTY ARIZONA	W–318
REVISED:				
10/02				SHEET 3 OF 3

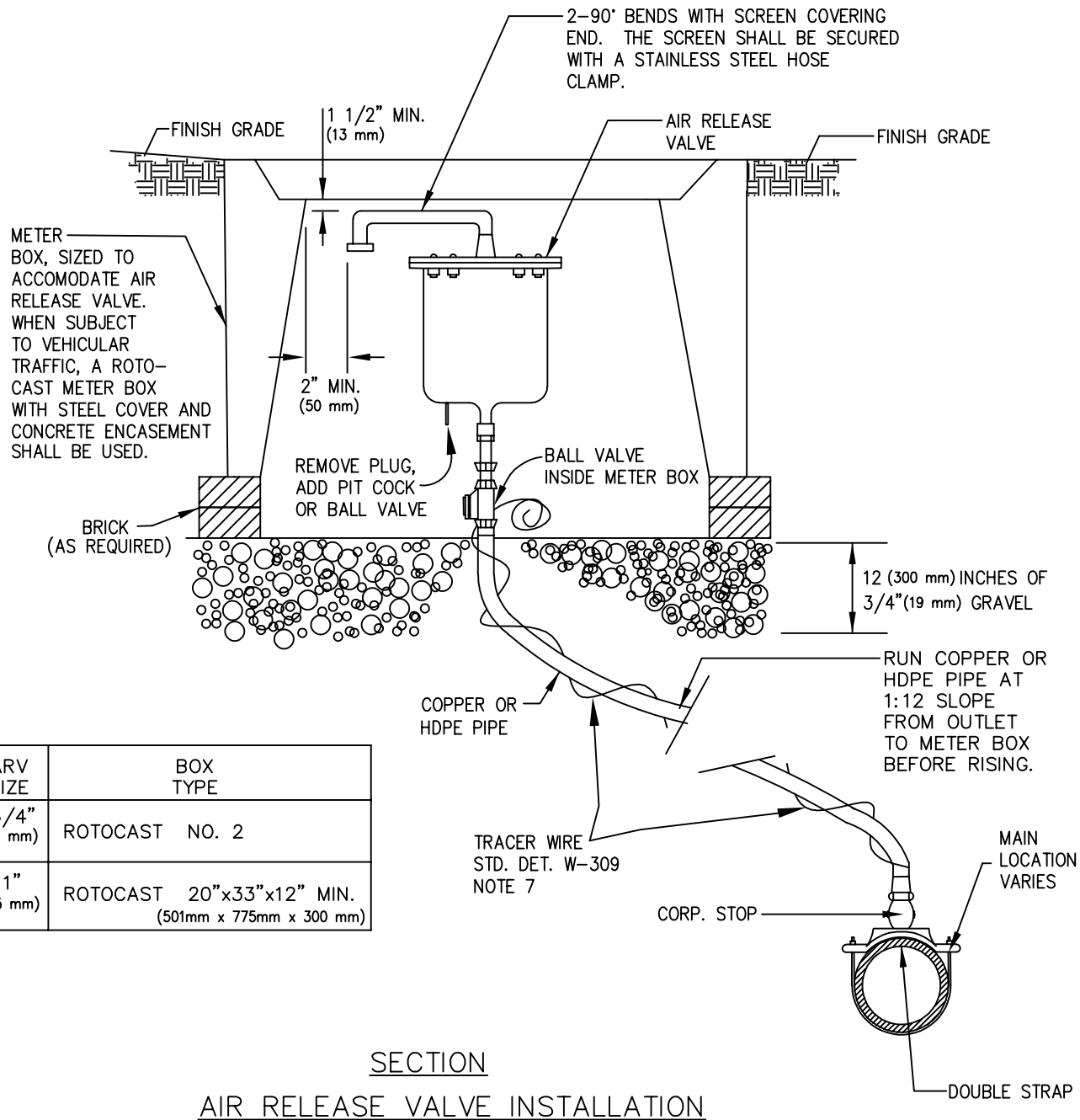

ARV SIZE	BOX TYPE
3/4" (19 mm)	ROTOCAST NO. 2
1" (25 mm)	ROTOCAST 20"x33"x12" MIN. (501mm x 775mm x 300 mm)

SECTION

AIR RELEASE VALVE INSTALLATION
(FOR ARV 1 INCH (25 mm) OR LESS)

NOTES:

When using HDPE, a steel support post must be used. The support post shall be a No. 5 rebar, a minimum of 4 feet (1.2 m) in length to support the ball valve. Secure to post with nylon zip ties.

The air release valve shall be located in accordance with the plans. The air release valve shall generally be located in a level area.which parallels either the curb, sidewalk or watermain. Set the air release valve 8"(200 mm) from back of curb in streets with curbs. Set the air release 3'(910 mm) from property line in streets without curbs.

All air release valve installations require a tracer wire. The tracer wire shall use RHW, or RHH solid 10 gauge (6 mm2) and run in a continuous length from the corporation stop to the ball valve. The tracer wire shall be attached to the air release line with tape or wire ties at 1'(300 mm) intervals. A 6"(150 mm) coil of wire shall be left in the meter box.

ISSUED:		STANDARD DETAIL		DETAIL NO.
6/97	TUCSON WATER	WSM AIR RELEASE VALVE INSTALLATION 3/4"(20 mm) OR 1" (25 mm)	THE SEAL of PIMA COUNTY ARIZONA	W-330
REVISED: 10/02				SHEET 1 OF 1

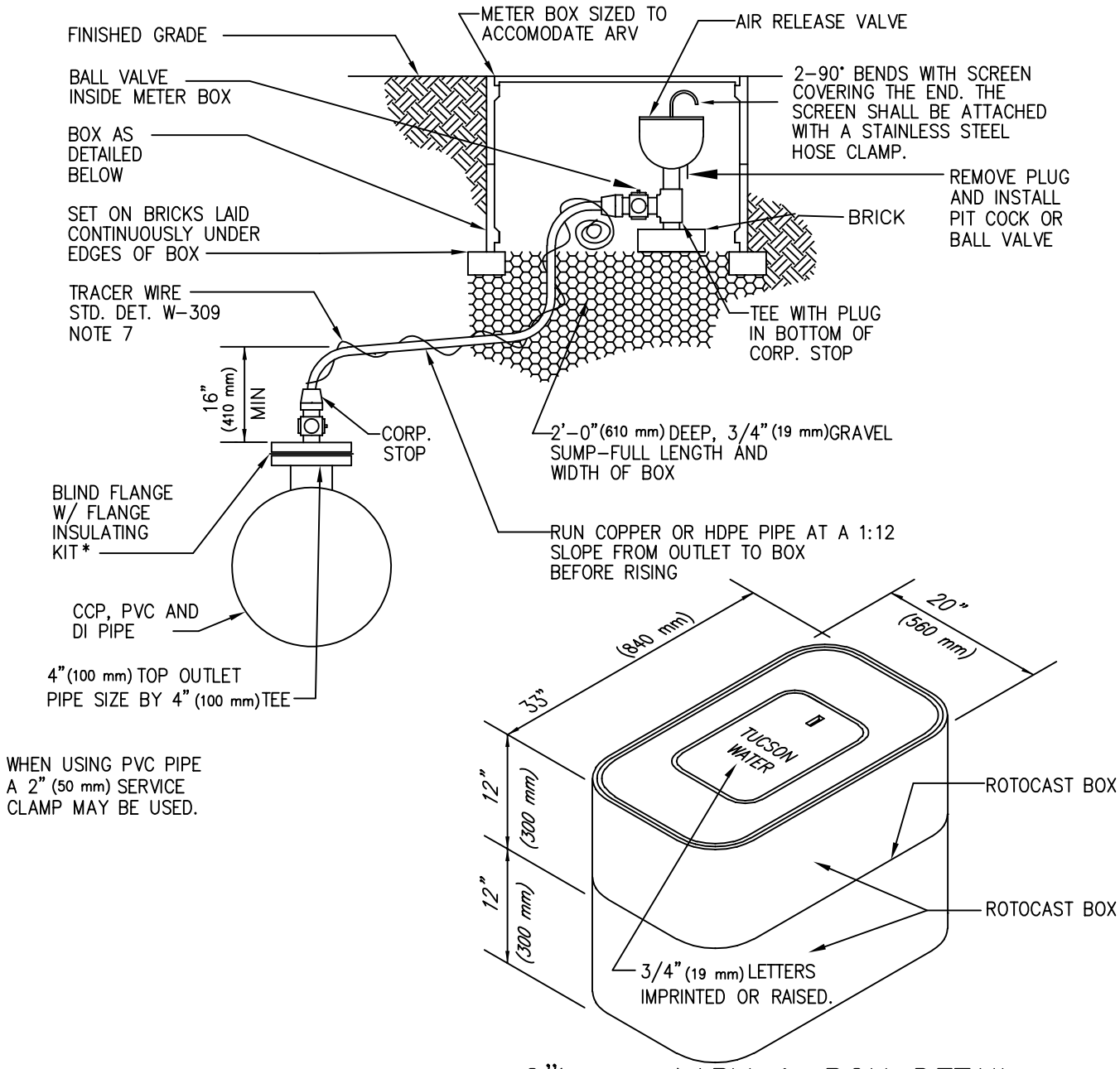

2"(50 mm) ARV & BOX DETAIL

FOR CCP, HDPE, DI AND PVC PIPE

NOT TO SCALE

NOTE

* When using HDPE, a steel support post must be used. The support post shall be a No. 5 rebar, a minimum of 4' (1.2 m) in length to support the ball valve. Secure the ball valve / service line to the post with nylon zip ties.

Flange insulating kit must be tested to confirm isolation prior to backfill. Include test results in final corrosion report.

**Flange insulating kit not required when using HDPE pipe for pipe run.

All air release valve installations require a tracer wire. The tracer wire shall be USE, RHW, or RHH solid 10 gauge (6 mm²) and run in a continous length from the corporation to ball valve. The tracer wire shall be attached to the air release line with tape or wire ties at 1' (300 mm) intervals. A 6" (150 mm) coil of wire shall be left in the meter box.

ISSUED:		STANDARD DETAIL		DETAIL NO.
6/97	TUCSON WATER	WSM AIR RELEASE VALVE INSTALLATION 2" (50 mm)	THE SEAL of PIMA COUNTY ARIZONA	W-331
REVISED:				
10/02				SHEET 1 OF 1

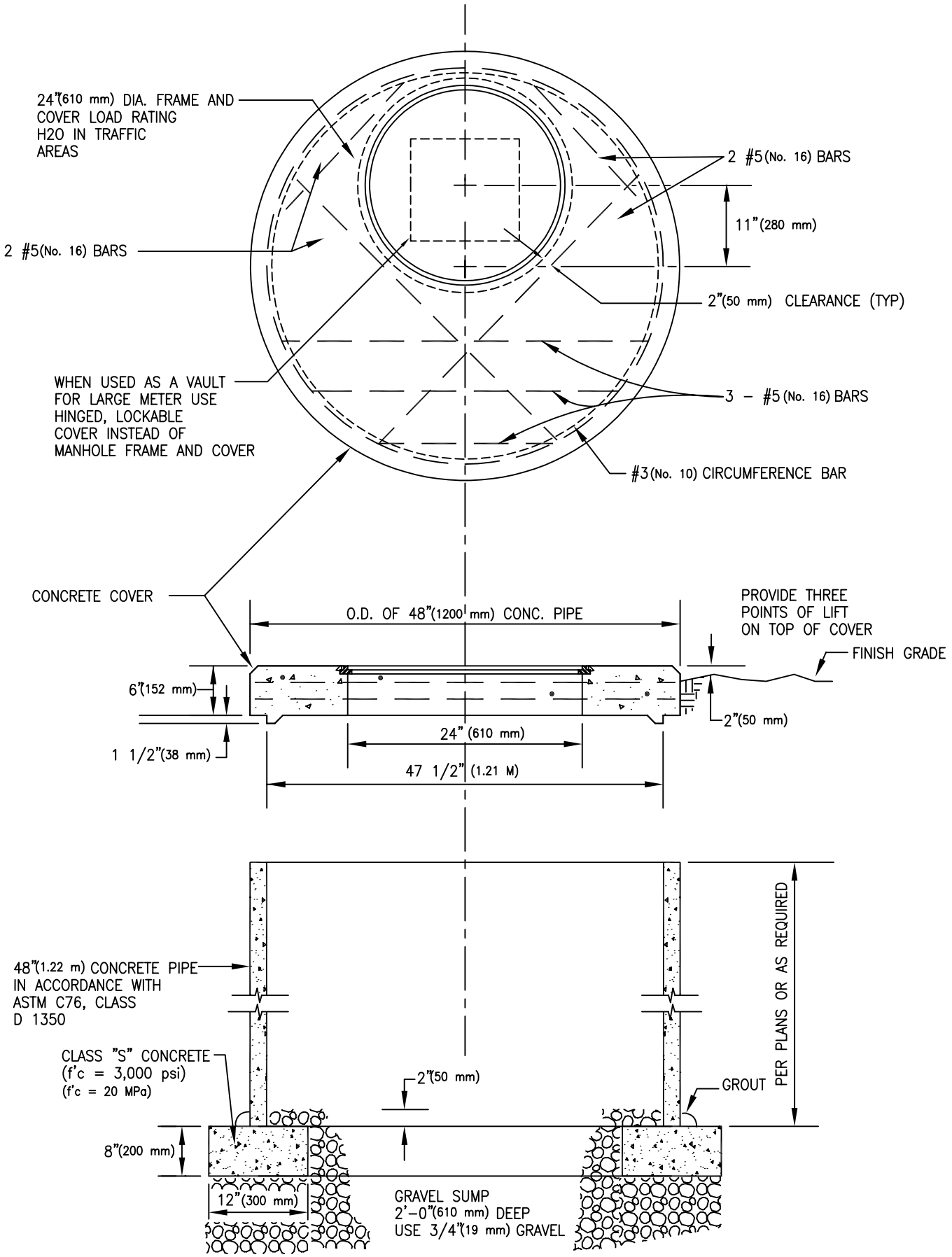

ISSUED:		STANDARD DETAIL		DETAIL NO.
6/97	TUCSON WATER	WSM STANDARD VAULT	THE SEAL of PIMA COUNTY ARIZONA	W-335
REVISED:				
10/02				SHEET 1 OF 1

NOTES:

1. All new pipe and fittings shall be restrained in accordance with the Standard Specifications.
2. The minimum restrained joint length shall be as indicated on the plans or as directed by the Engineer.
3. Existing valves and fittings 4 inch (100 mm) and larger shall be salvaged and delivered to the water utility per Std. Det. W–105, unless directed otherwise by the Engineer.
4. All new pipe and fittings shall have a minimum nominal diameter of 4 inches (100 mm), unless otherwise noted on the project plans or directed by the Engineer.
5. Connect to existing pipeline utilizing a flexible coupling–or as approved. The coupling shall be compatible with the outside diameter of both the new and existing pipe.
6. Fittings with leaded joints shall be removed and replaced as approved by the Engineer.
7. When noted on the Water System Modification plans, existing water facilities may be required to be removed rather than abandoned in place.

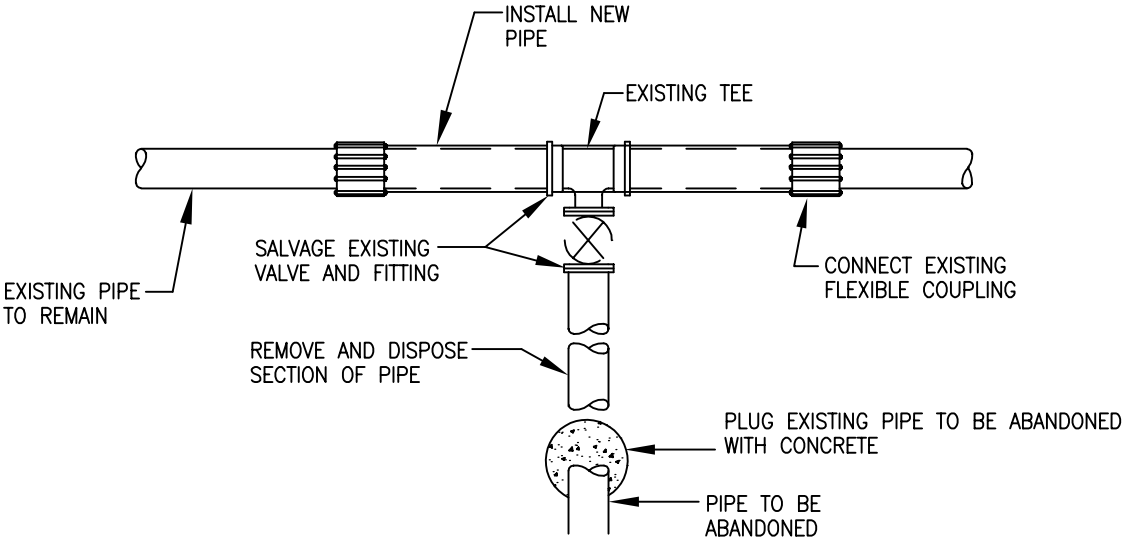

EXISTING PIPE IN SERVICE

ISSUED:		STANDARD DETAIL		DETAIL NO.
6/97	TUCSON WATER	WSM SYSTEM ABANDONMENT	THE SEAL of PIMA COUNTY ARIZONA	W-350
REVISED:				
10/02				SHEET 1 OF 2

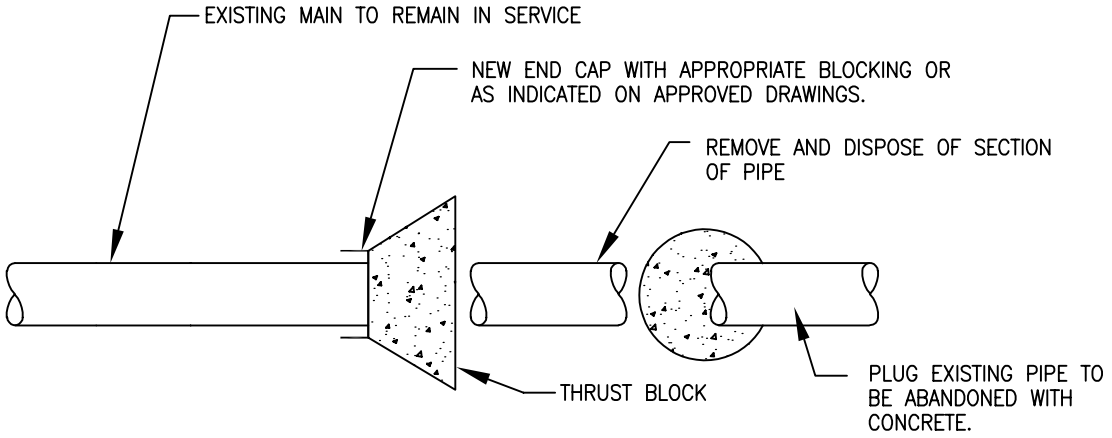

EXISTING PIPE

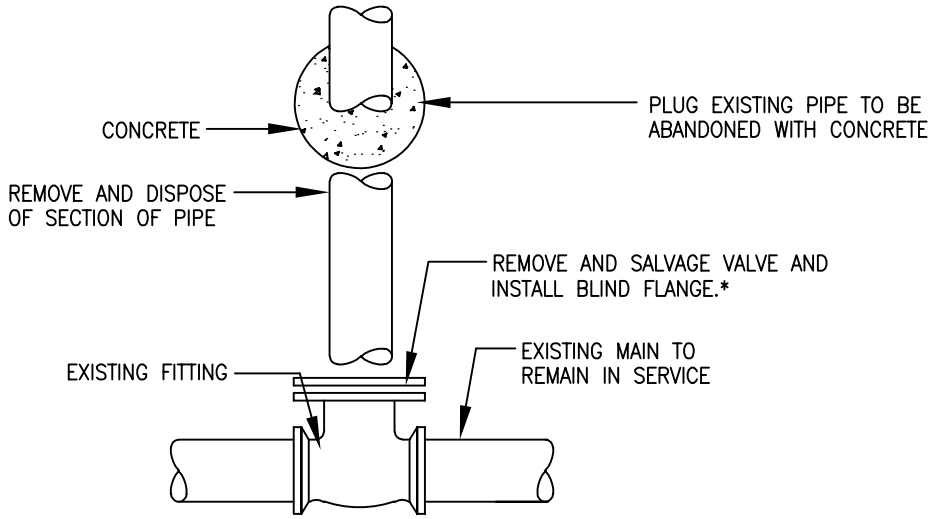

* IN THE CASE WHERE A FLANGED VALVE DOES NOT EXIST, PLUG AND INSTALL THRUST BLOCKING PER STD. DET. W–610

AT FITTING (FLANGED FITTING SHOWN)

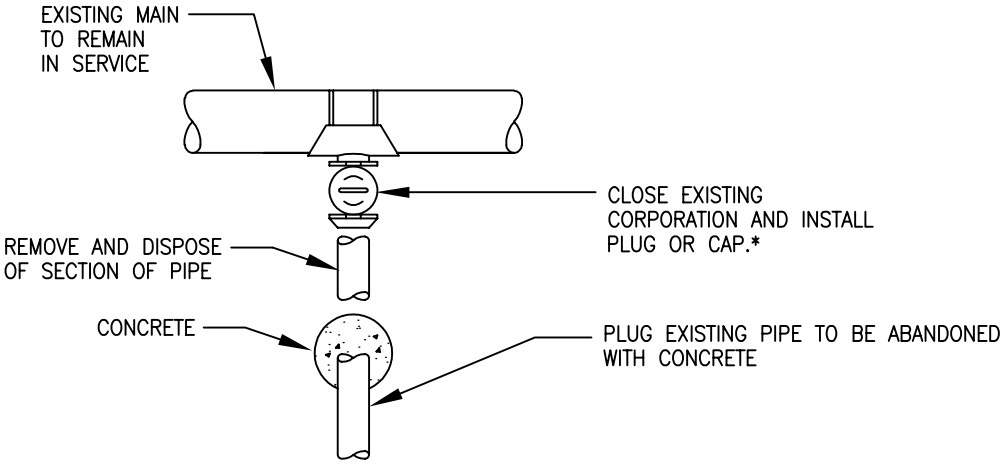

* WHERE CORPORATION CANNOT BE MADE TO CLOSE COMPLETELY, REMOVE SECTION OF EXISTING MAIN CONTAINING CORPORATION AND SPLICE IN NEW MAIN SEGMENT AS NOTED FOR "EXISTING PIPE IN SERVICE" EXAMPLE OF THIS DETAIL.

AT CORPORATION

ISSUED:		STANDARD DETAIL		DETAIL NO.
6/97	TUCSON WATER	WSM SYSTEM ABANDONMENT	THE SEAL of PIMA COUNTY ARIZONA	W-350
REVISED:				
10/02				SHEET 2 OF 2

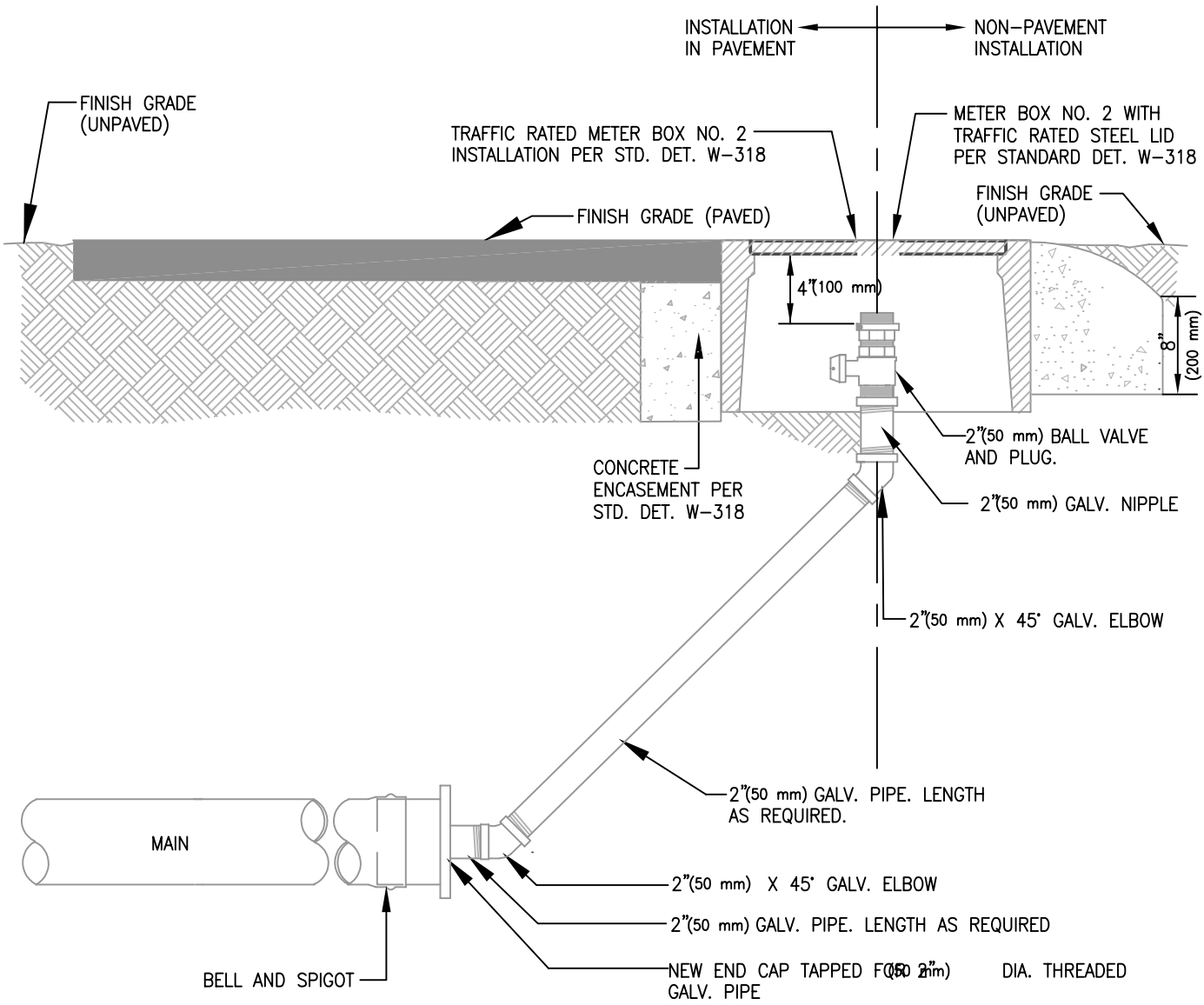

NOTES:

(1) VALVE, PIPE JOINTS, AND END CAP SHALL BE MECHANICALLY RESTRAINED.IN ACCORDANCE WITH STANDARD SPECIFICATION SECTION 513.

(2) CONCRETE THRUST BLOCKS MAY BE USED IF APPROVED BY THE ENGINEER

(3) PLACE METER BOX TO CENTER BALL VALVE IN MIDDLE OF BOX.

ISSUED:		STANDARD DETAIL		DETAIL NO.
6/97	TUCSON WATER	WSM DRAIN VALVE ASSEMBLY	THE SEAL of PIMA COUNTY ARIZONA	W-400
REVISED:				
10/02				SHEET 1 OF 1

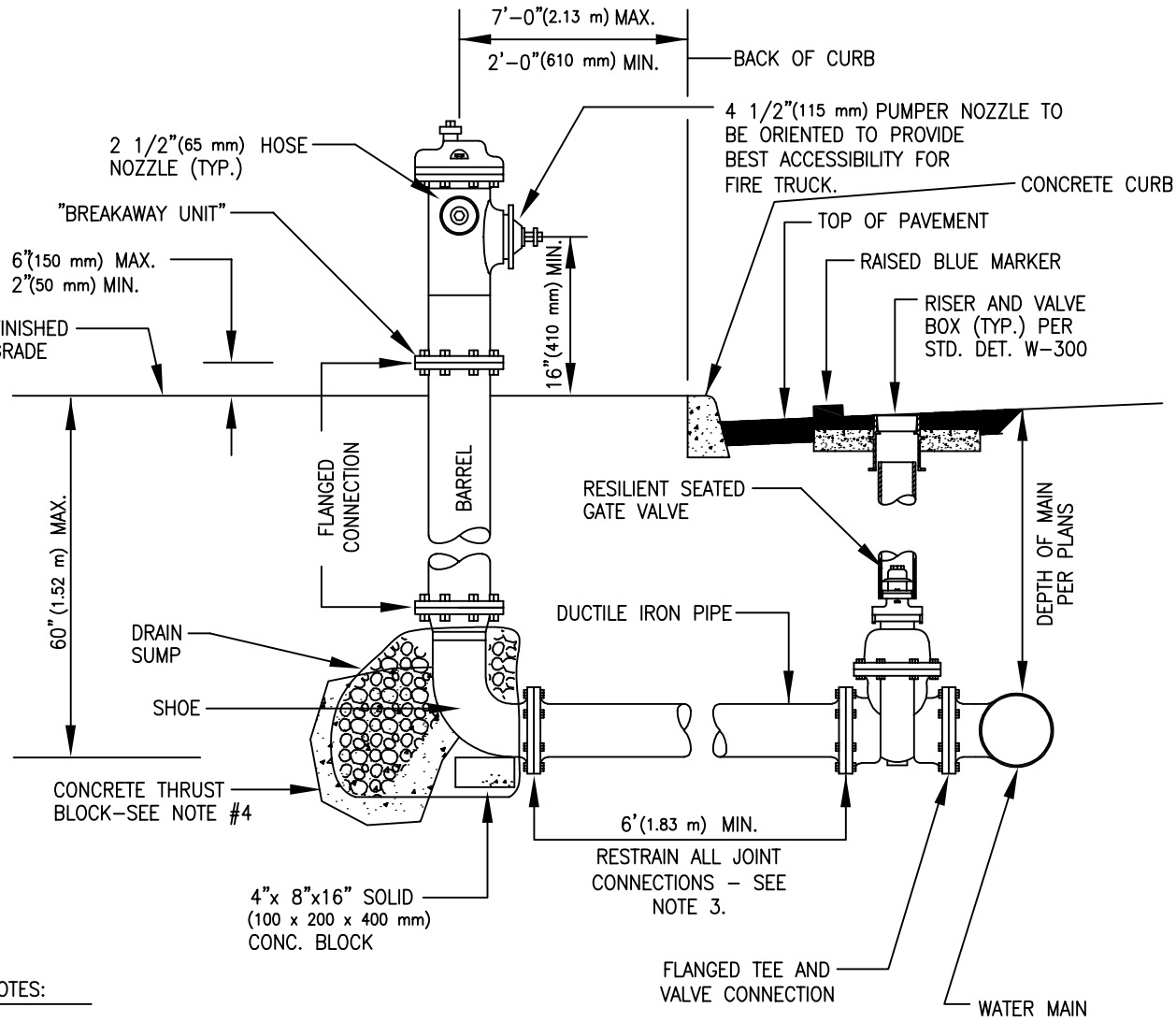

NOTES:

1. Hydrant shoe shall be a mechanical joint fitting.
2. Fire hydrants not in service shall be tagged by the contractor with "OUT OF SERVICE" rings. Rings shall be provided by Tucson Water. All hydrants will remain out of service until the project is accepted by the water utility.
3. All mechanically restrained joint connections shall be in accordance with Standard Specification Section 510 and shall extend from water main tee to hydrant shoe.
4. Concrete thrust block per Std. Det. W–610 shall only be used for extending existing pipe, which is not mechanically restrained, between the shoe and the main tee and approved by engineer.
5. A minimum of 8 cu. ft.. (0.23 m) of 3/4" (19 mm) gravel shall be provided for drain sump. Drain sump shall be a minimum of 3'–0" (915 mm) in diameter. Cover drain holes with drain sump material.
6. Hydrant laterals greater than 40 feet (12.2 m) in length shall require a gate valve at the tee and within 10 feet (3.05 m) of the hydrant.
7. For water mains at depths greater than 60 inches (1.52 m), the elevation of the hydrant shoe shall be adjusted to a depth no greater than 48 inches (1.22 m) by the installation of fittings after the tee and gate valve.
8. Refer to Standard Detail W–500 page 4 for stub out to be used for future fire hydrant installation.

ISSUED:		STANDARD DETAIL		DETAIL NO.
6/97	TUCSON WATER	WSM FIRE HYDRANT INSTALLATION	THE SEAL of PIMA COUNTY ARIZONA	W–500
REVISED:				
10/02				SHEET 1 OF 8

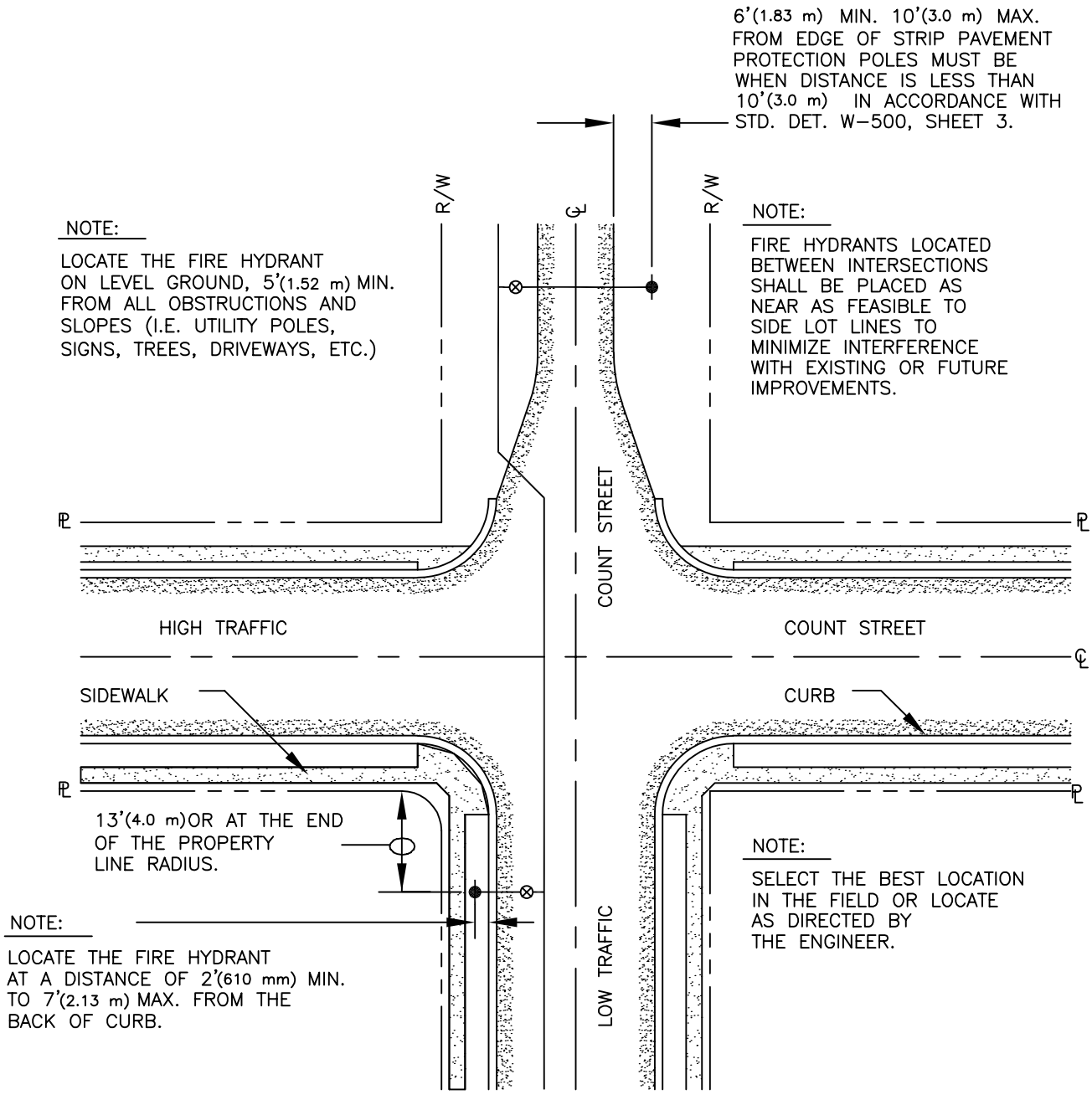

NOTE:

BLUE, TWO-WAY RAISED PAVEMENT MARKER INSTALLED AT FIRE HYDRANT LOCATION IN ACCORDANCE WITH THE REQUIREMENTS OF THE AGENCY HAVING JURISDICTION FOR THE ROADWAY.

ISSUED:		STANDARD DETAIL		DETAIL NO.
6/97	TUCSON WATER	WSM FIRE HYDRANT INSTALLATION	THE SEAL of PIMA COUNTY ARIZONA	W-500
REVISED:				
10/02				SHEET 2 OF 8

NOTE:

POSTS SHALL NOT BE PLACED IN FRONT OF NOZZLES.

POSTS MAY BE CHANGED IN NUMBER AND ARRANGEMENT IN ORDER TO ACCOMMODATE SITE CONDITIONS WHEN SHOWN ON THE APPROVED PLANS OR APPROVED BY THE ENGINEER.

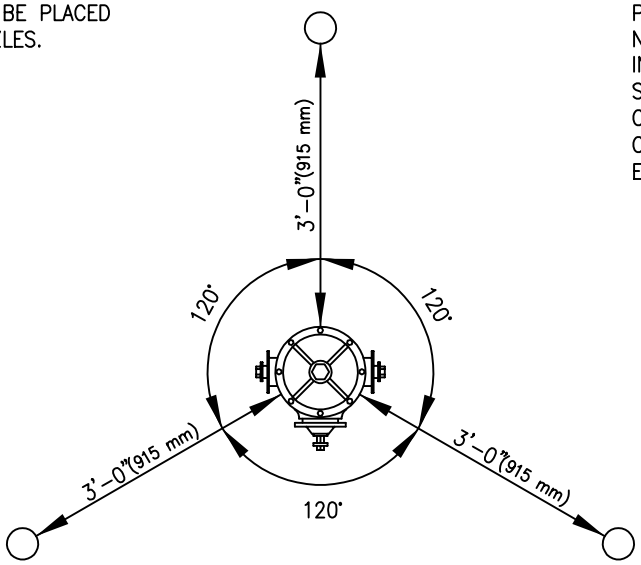

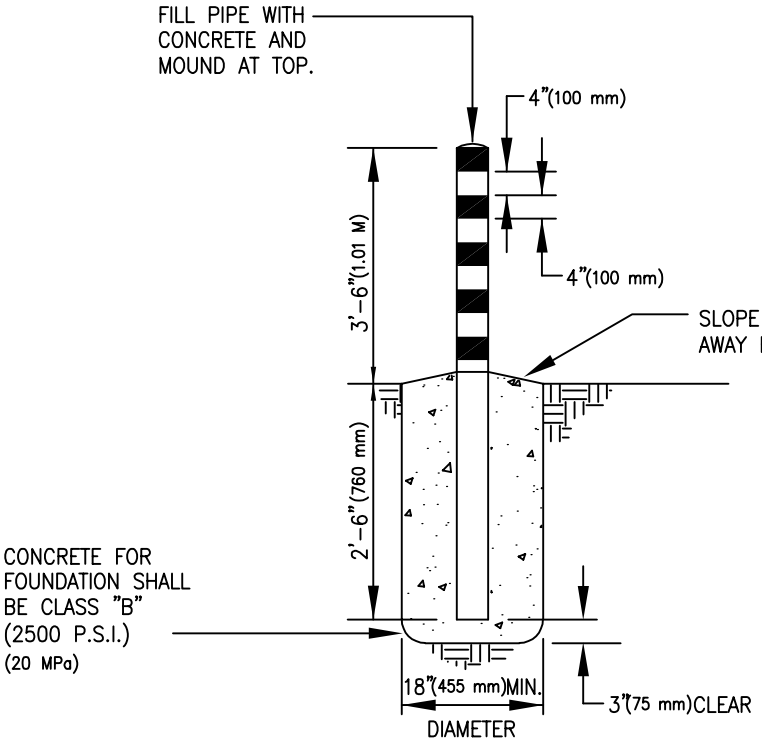

POST BARRICADES

4"(100 mm) SCHEDULE 40 STEEL PIPE. PAINT WITH ONE COAT INDUSTRIAL SYNTHETIC PRIMER AND ONE COAT INDUSTRIAL SYNTHETIC DULL BLACK ENAMEL. STRIPE WITH 4"(100 mm) BANDS OF YELLOW REFLECTORIZED TAPE.

FIRE HYDRANT PROTECTION POSTS

ISSUED:		STANDARD DETAIL		DETAIL NO.
6/97	TUCSON WATER	WSM FIRE HYDRANT INSTALLATION	THE SEAL of PIMA COUNTY ARIZONA	W-500
REVISED:				
10/02				SHEET 3 OF 8

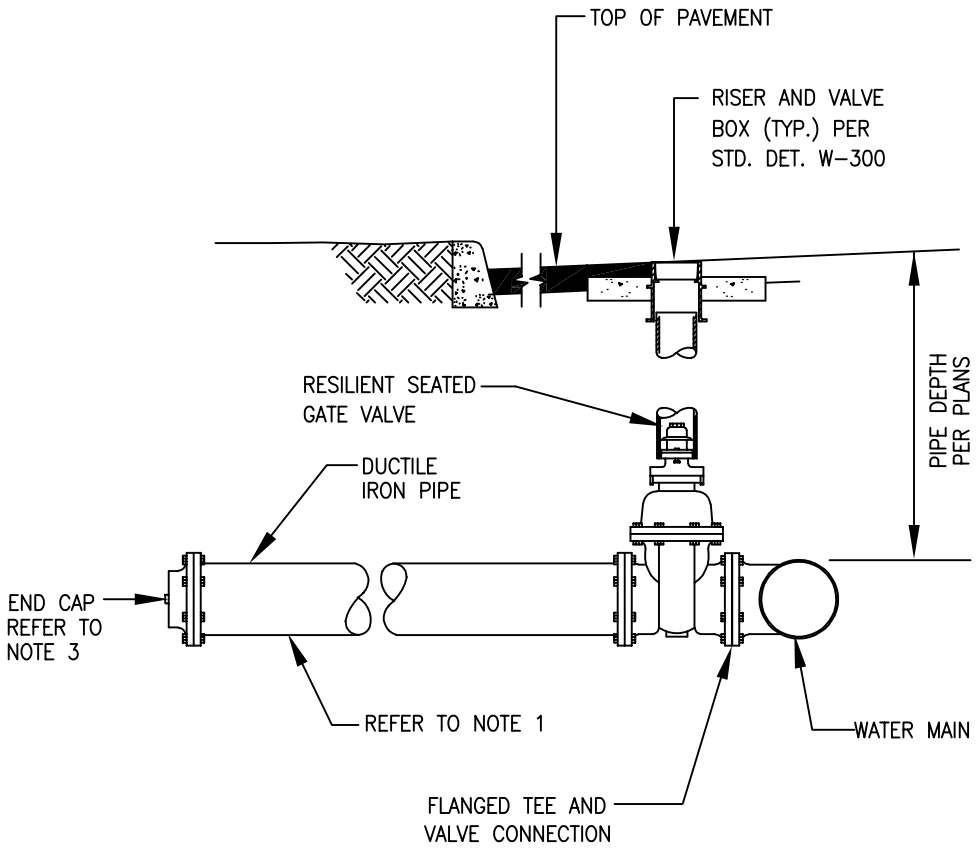

NOTES:

1. Mechanically restrained joint connection shall be in accordance with Standard Specification Section 510 and shall extend from water main tee to end cap. Mainline to be restrained per Std. Det. W-600.

2. Concrete thrust block per Std. Det. 610 shall only be used for extending existing pipe, which is not mechanically restrained, between the cap and the main tee or when approved by the engineer.

3. End caps on stub-outs shall be mechanical joint, tapped for a 2 inch (50 mm) iron pipe thread, with 2"(50 mm) galvanized threaded plug will be installed or adjusted to a depth of no greater than 48"(1.22 m).

STUB OUT

ISSUED:		STANDARD DETAIL		DETAIL NO.
6/97	TUCSON WATER	WSM FIRE HYDRANT INSTALLATION	THE SEAL of PIMA COUNTY ARIZONA	W-500
REVISED:				
10/02				SHEET 4 OF 8

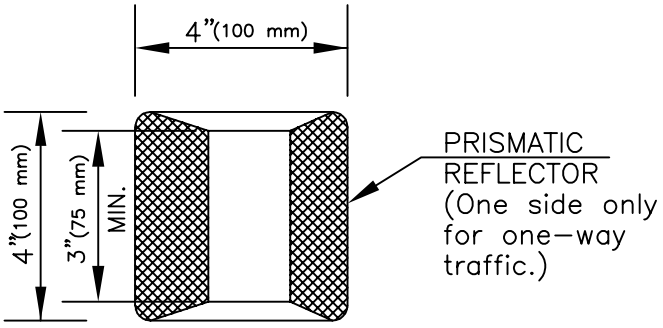

PLAN

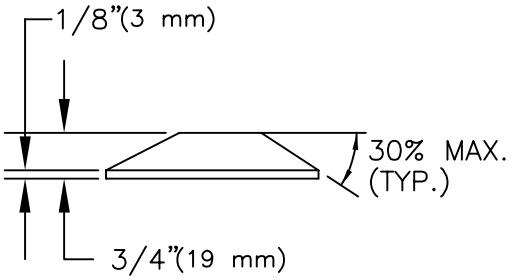

ELEVATION

TWO-WAY PAVEMENT MARKER

REFLECTOR COLORS

BLUE – FIRE HYDRANT MARKER, SEE SEE SHT.6, 7 & 8 OF STD. DET. W-500 FOR PLACEMENT LOCATION.

REFLECTIVE AREA IS 3.25 SQ. IN. (2,100 SQ. mm^2)

PER REFLECTIVE FACE.

MATERIALS

ACRYLIC PLASTIC REFLECTOR FILLED WITH A TIGHTLY ADHERENT POTTING COMPOUND.

INSTALLATION

1. CLEAN SURFACE.
2. APPLY EPOXY TO SELECTED LOCATION, SPREADING EVENLY.
3. PLACE MARKER ON PREVIOUSLY DETERMINED POSITION, APPLYING SLIGHT PRESSURE TO FORCE SMALL EPOXY BEAD AROUND MARKER.

NOTE

EPOXY TO BE A PROVEN ADHERENT COMPATIBLE TO SUCH SURFACES AS ASPHALTIC CONCRETE, CONCRETE ETC., AND OR AS RECOMMENDED BY MARKER MANUFACTURER.

RAISED PAVEMENT MARKER DETAIL

ISSUED:		STANDARD DETAIL		DETAIL NO.
6/97	TUCSON WATER	WSM FIRE HYDRANT INSTALLATION	THE SEAL of PIMA COUNTY ARIZONA	W-500
REVISED:				
10/02				SHEET 5 OF 8

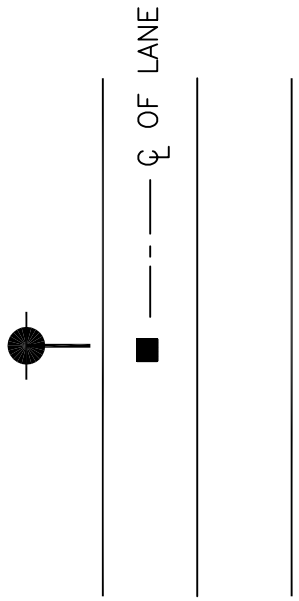

TWO LANE STREET

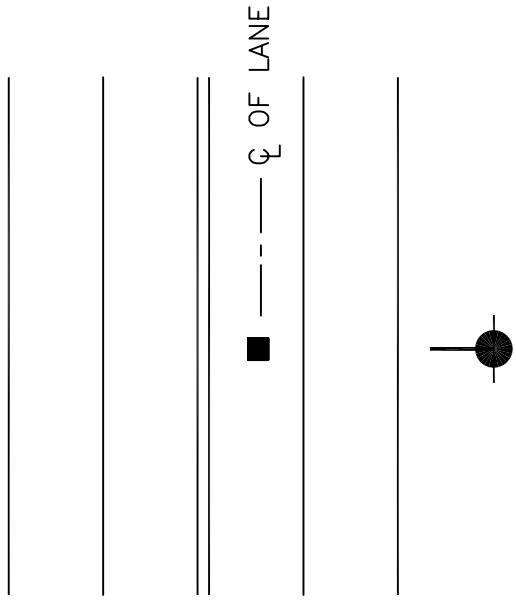

MULTI-LANE STREET

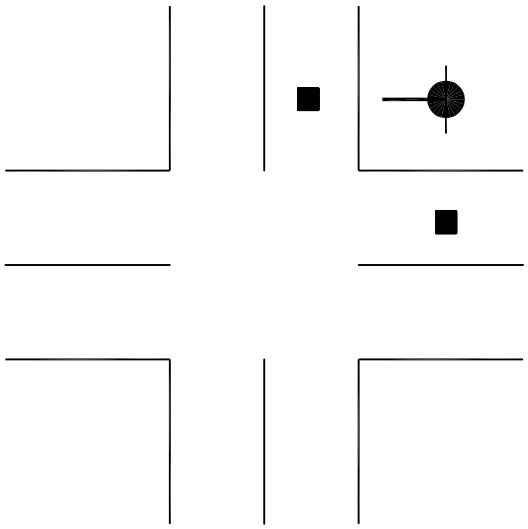

TWO LANE STREET
AT INTERSECTION

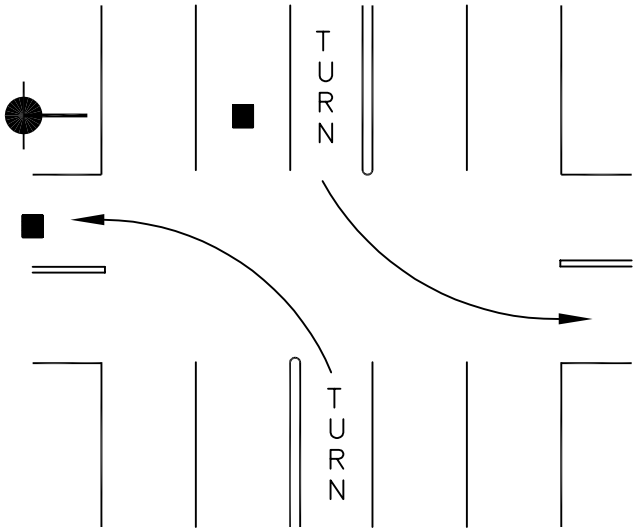

FOUR LANE STREET WITH
TURN LANE AT INTERSECTION

FIRE HYDRANT MARKER LOCATION

ISSUED:		STANDARD DETAIL		DETAIL NO.
6/97	TUCSON WATER	WSM FIRE HYDRANT INSTALLATION	THE SEAL of PIMA COUNTY ARIZONA	W-500
REVISED:				
10/02				SHEET 6 OF 8

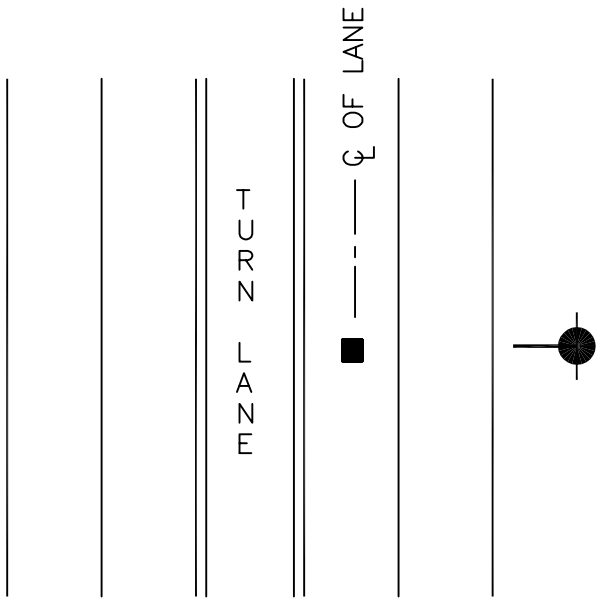

MULTI-LANE STREET WITH TURN LANE

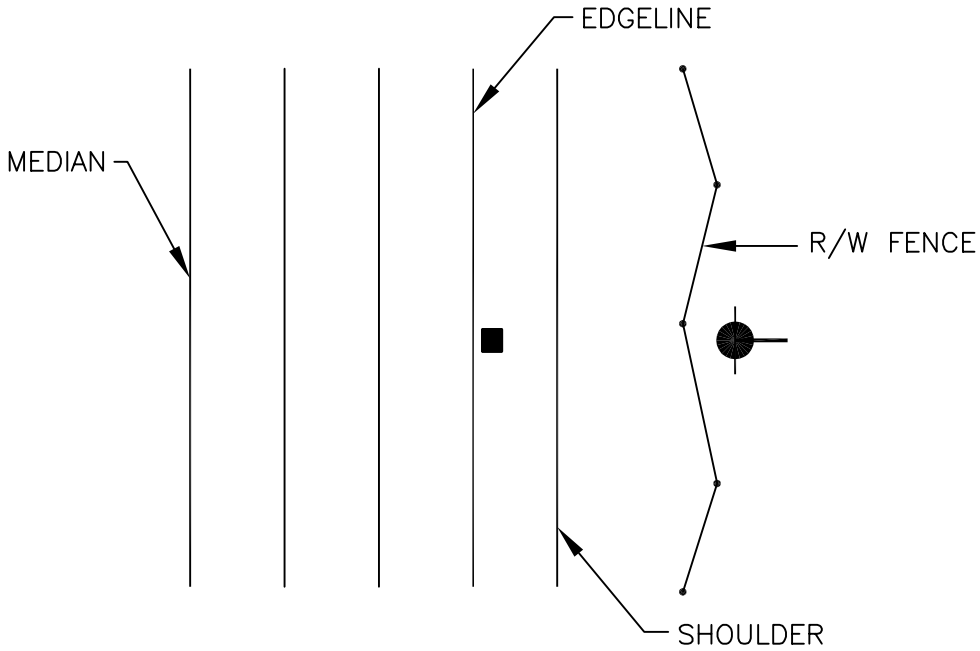

FREEWAYS AND EXPRESSWAYS

FIRE HYDRANT MARKER LOCATION

ISSUED:		STANDARD DETAIL		DETAIL NO.
6/97	TUCSON WATER	WSM FIRE HYDRANT INSTALLATION	THE SEAL of PIMA COUNTY ARIZONA	W-500
REVISED:				
10/02				SHEET 7 OF 8

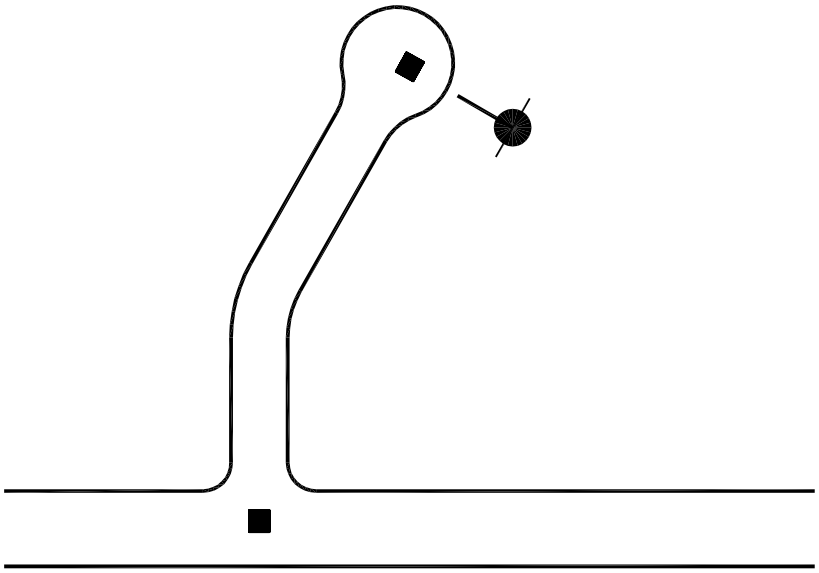

LONG CUL-DE-SAC INSTALLATION

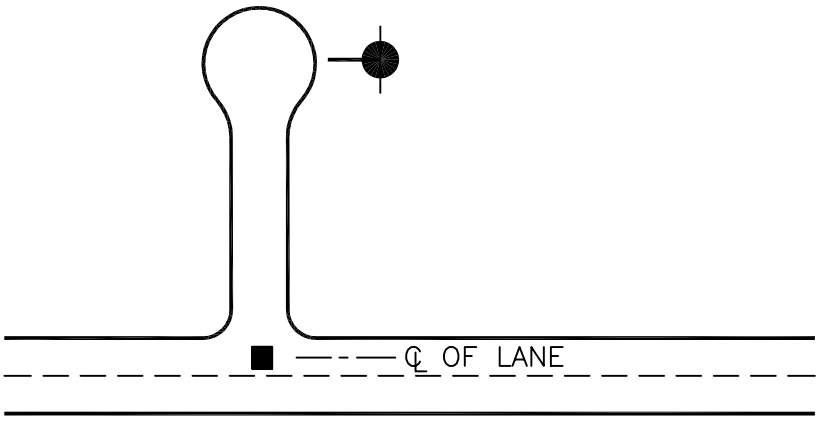

SHORT CUL-DE-SAC INSTALLATION

FIRE HYDRANT MARKER LOCATION

ISSUED:		STANDARD DETAIL		DETAIL NO.
6/97	TUCSON WATER	WSM FIRE HYDRANT INSTALLATION	THE SEAL of PIMA COUNTY ARIZONA	W-500
REVISED:				
10/02				SHEET 8 OF 8

NOTES

1. The lengths of restrained or continuous pipe called out in the following tables are for installation of mechanically restrained fittings and are calculated based on the following parameters:

   a. All ductile iron (DI) is polyethylene encased.

   b. The soil type is "GP" as defined by the Unified Soil Classifications, ASTM Standard D 2487.

   c. The test pressure of the water system is 200 psi (1.4 MPa)

   d. The trench is Type 5, as per ANSI/AWWA C 150/A 21.5, Trench Conditions.

   e. The depth of cover is 2' (610 mm).

   f. The Safety Factor used is 1.5.

2. If field conditions varying significantly from these parameters are encountered, the contractor shall immediately advise the Engineer. The Engineer will advise the contractor of the required length of restrained pipe necessary to meet the existing conditions based on the restraint tables.

3. The following restraint tables will be used unless alternate tables are approved by the Engineer or shown on the approved plans.

ALL THRUST RESTRAINTS SHALL BE IN COMPLIANCE WITH STANDARD SPECIFICATION SECTION 513.

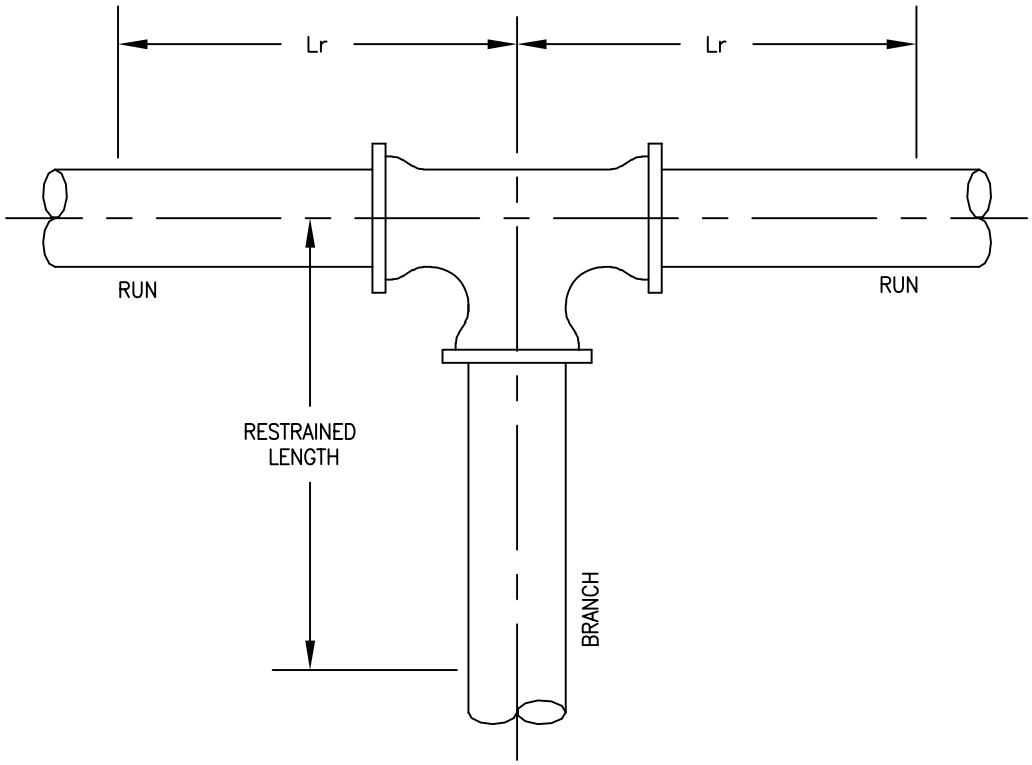

TEES

The minimum attached length of pipe (Lr) to extend in each direction along the run of the tee shall be a solid pipe without joints, fittings, etc. The length of the restrained branch shall be derived from the following table.

FOR TEE AND PIPE SIZE SCHEDULE SEE SHEET 3 OF 5

ISSUED:		STANDARD DETAIL		DETAIL NO.
6/97	TUCSON WATER	WSM RESTRAINED JOINTS	THE SEAL of PIMA COUNTY ARIZONA	W-600
REVISED:				
10/02				SHEET 2 OF5

TEE SIZE & PIPE MATERIAL		MINIMUM ATTACHED LENGTH OF PIPE (Lr)										
		0'(0 mm)	2'(610 mm)	4'(1.22 m)	6'(1.83 m)	8'(2.44 m)	10'(3.1 m)	12'(3.7 m)	14'(4.3 m)	16'(4.9 m)	18'(5.5 m)	20'(6.1 m)
		LENGTH OF RESTRAINED BRANCH										
PVC PIPE	4x4 (100 x 100 mm)	74' (22.6 m)	64' (19.5 m)	53' (16.2 m)	42' (12.8 m)	32' (9.8 m)	21' (6.4 m)	11' (3.4 m)	1' (300 mm)	1' (300 mm)	1' (300 mm)	1' (300 mm)
	6x4 (150 x 100 mm)	74' (22.6 m)	58' (17.7 m)	42' (12.8 m)	26' (7.92 m)	11' (3.4 m)	1' (300 mm)	1' (300 mm)	1' (300 mm)	1' (300 mm)	1' (300 mm)	1' (300 mm)
	6x6 (150 x 150 mm)	104' (32 m)	93' (28.3 m)	82' (25 m)	71' (21.6 m)	61' (18.6 m)	50' (15.2 m)	39' (11.9 m)	28' (8.5 m)	18' (5.5 m)	7' (2.13 m)	1' (300 mm)
	8x4 (200 x 100 mm)	74' (22.6 m)	53' (16.2 m)	31' (9.45 m)	10' (3.05 m)	1' (300 mm)	1' (300 mm)	1' (300 mm)	1' (300 mm)	1' (300 mm)	1' (300 mm)	1' (300 mm)
	8x6 (200 x 150 mm)	104' (32 m)	89' (27.1 m)	75' (22.9 m)	60' (18.3 m)	46' (14.0 m)	31' (9.4 m)	17' (5.2 m)	3' (910 mm)	1' (300 mm)	1' (300 mm)	1' (300 mm)
	8x8 (200 x 200 mm)	135' (41 m)	124' (38 m)	113' (34 m)	102' (31 m)	91' (27.7 m)	80' (24.4 m)	69' (21.0 m)	59' (18.0 m)	48' (14.6 m)	37' (11.3 m)	26' (7.9 m)
	12x4 (300 x 100 mm)	74' (22.6 m)	41' (12.5 m)	7' (2.13 m)	1' (300 mm)	1' (300 mm)	1' (300 mm)	1' (300 mm)	1' (300 mm)	1' (300 mm)	1' (300 mm)	1' (300 mm)
	12x6 (300 x 150 mm)	104' (32 m)	81' (24.7 m)	58' (17.7 m)	35' (10.7 m)	13' (4.0 m)	1' (300 mm)	1' (300 mm)	1' (300 mm)	1' (300 mm)	1' (300 mm)	1' (300 mm)
	12x8 (300 x 200mm)	135' (41 m)	118' (36 m)	101' (31 m)	83' (25.3 m)	66' (20.1 m)	49' (14.9 m)	32' (9.8 m)	15' (4.6 m)	1' (300 mm)	1' (300 mm)	1' (300 mm)
	12x12 (300 x 300 mm)	189' (58 m)	177' (54 m)	166' (51 m)	155' (47 m)	144' (44 m)	132' (40 m)	121' (37 m)	110' (34 m)	98' (29.9 m)	87' (26.5 m)	76' (23.2 m)
DI POLY WRAP	4x4 (100 x 100 mm)	112' (34 m)	96' (29.3 m)	80' (24.4 m)	64' (19.5 m)	48' (14.6 m)	32' (9.8 m)	17' (5.2 m)	1' (300 mm)	1' (300 mm)	1' (300 mm)	1' (300 mm)
	6x4 (150 x 100 mm)	112' (34 m)	88' (26.8 m)	64' (19.5 m)	40' (12.2 m)	16' (4.9 m)	1' (300 mm)	1' (300 mm)	1' (300 mm)	1' (300 mm)	1' (300 mm)	1' (300 mm)
	6x6 (150 x 150 mm)	157' (48 m)	141' (43 m)	124' (38 m)	108' (33 m)	92' (28.0 m)	75' (22.9 m)	59' (18.0 m)	43' (13.1 m)	27' (8.2 m)	10' (3.0 m)	1' (300 mm)
	8x4 (200 x 100 mm)	112' (34 m)	80' (24.4 m)	48' (14.6 m)	15' (4.6 m)	1' (300 mm)	1' (300 mm)	1' (300 mm)	1' (300 mm)	1' (300 mm)	1' (300 mm)	1' (300 mm)
	8x6 (200 x 150 mm)	157' (48 m)	135' (41 m)	113' (34 m)	91' (27.7 m)	70' (21.3 m)	48' (14.6 m)	26' (7.9 m)	4' (1.22 m)	1' (300 mm)	1' (300 mm)	1' (300 mm)
	8x8 (200 x 200 mm)	204' (62 m)	187' (57 m)	171' (52 m)	154' (47 m)	138' (42 m)	121' (37 m)	105' (32 m)	88' (26.8 m)	72' (21.9 m)	55' (16.8 m)	39' (11.9 m)
	12x4 (300 x 100 mm)	112' (34 m)	61' (18.6 m)	11' (18.6 m)	1' (300 mm)	1' (300 mm)	1' (300 mm)	1' (300 mm)	1' (300 mm)	1' (300 mm)	1' (300 mm)	1' (300 mm)
	12x6 (300 x 150 mm)	157' (48 m)	122' (37 m)	88' (37.2 m)	54' (16.5 m)	19' (5.8 m)	1' (300 mm)	1' (300 mm)	1' (300 mm)	1' (300 mm)	1' (300 mm)	1' (300 mm)
	12x8 (300 x 200 mm)	204' (62 m)	178' (54 m)	152' (46 m)	126' (38 m)	100' (30 m)	74' (22.6 m)	48' (14.6 m)	22' (6.7 m)	1' (300 mm)	1' (300 mm)	1' (300 mm)
	12x12 (300 x 300 mm)	284' (87 m)	267' (81 m)	250' (81 m)	233' (71 m)	216' (66 m)	199' (61 m)	182' (55 m)	165' (50 m)	148' (45 m)	131' (40 m)	114' (35 m)

ISSUED: 6/97

REVISED: 10/02

TUCSON WATER

STANDARD DETAIL

WSM RESTRAINED JOINTS

THE SEAL of PIMA COUNTY ARIZONA

DETAIL NO. W-600

SHEET 3 OF 5

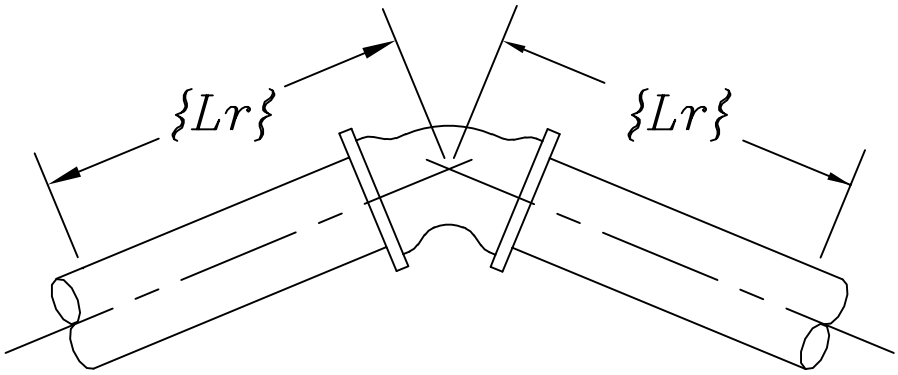

HORIZONTAL BENDS

The minimum restrained length of pipe (Lr) to extend in both directions from the horizontal bend shall be derived from the following table.

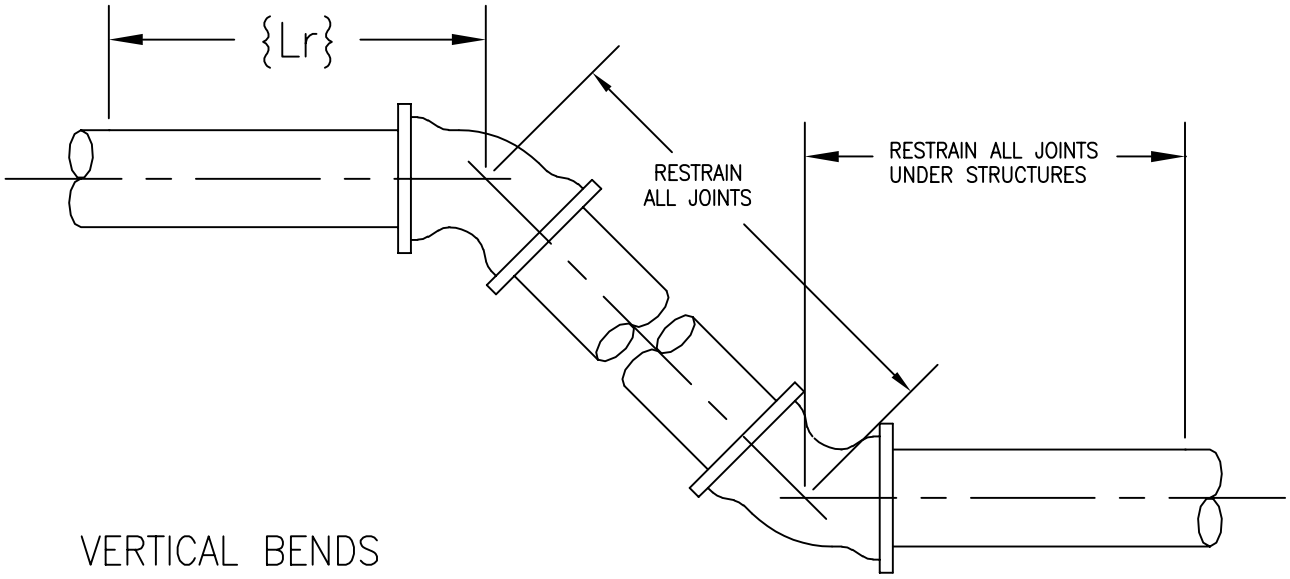

VERTICAL BENDS

The minimum restrained length of pipe (Lr) to be restrained on both sides of the vertical off set shall be derived from the following table.

PIPE SIZE & MATERIAL		HORIZONTAL BENDS				VERTICAL BENDS			
		11 1/4°	22 1/2°	45°	90°	11 1/4°	22 1/2°	45°	90°
PVC PIPE	4"(100 mm)	3' (910 mm)	5' (1.52 m)	11' (3.4 m)	27' (8.2 m)	7' (2.13 m)	15' (4.6 m)	31' (9.4 m)	*
	6"(150 mm)	4' (1.22 m)	7' (2.13 m)	15' (4.6 m)	37' (11.3 m)	10' (3.0 m)	21' (6.4 m)	43' (13.1 m)	*
	8"(200 mm)	5' (1.52 m)	10' (3.05 m)	20' (6.1 m)	48' (14.6 m)	13' (4.0 m)	27' (8.2 m)	56' (17.1 m)	*
	12"(300 mm)	6' (1.83 m)	13' (4.0 m)	27' (8.2 m)	65' (19.8 m)	19' (5.8 m)	38' (11.6 m)	78' (23.8 m)	*
DI POLY WRAP	4"(100 mm)	3' (910 mm)	6' (1.83 m)	13' (4.0 m)	31' (9.45 m)	11' (3.4 m)	22' (6.7 m)	46' (14.0 m)	*
	6"(150 mm)	4' (1.22 m)	8' (2.44 m)	18' (5.5 m)	42' (12.8 m)	15' (4.6 m)	31' (9.5 m)	65' (19.8 m)	*
	8"(200 mm)	5' (1.52 m)	11' (3.4 m)	23' (7.0 m)	54' (16.5 m)	20' (6.1 m)	41' (12.5 m)	84' (25.6 m)	*
	12"(300 mm)	7' (2.13 m)	15' (4.6 m)	31' (9.5 m)	74' (22.6 m)	28' (8.5 m)	57' (17.4 m)	118' (36 m)	*

*NOT RECOMMENDED

ISSUED:		STANDARD DETAIL		DETAIL NO.
6/97	TUCSON WATER	WSM RESTRAINED JOINTS	THE SEAL of PIMA COUNTY ARIZONA	W-600
REVISED:				
10/02				SHEET 4 OF 5

REDUCER SIZE & PIPE MATERIAL		MINIMUM RESTRAINED LENGTH
PVC PIPE	6x4 (150 X 100 mm)	53' (16.2 m)
	8x4 (200 X 100 mm)	97' (29.6 m)
	8x6 (200 X 150 mm)	56' (17.1 m)
	12x4 (300 X 100 mm)	164' (50 m)
	12x6 (300 X 150 mm)	137' (42 m)
	12x8 (300 X 200 mm)	100' (30 m)
DI POLY WRAP	6x4 (150 X 100 mm)	81' (24.7 m)
	8x4 (200 X 100 mm)	147' (45 m)
	8x6 (200 X 150 mm)	85' (25.9 m)
	12x4 (300 X 100 mm)	247' (75 m)
	12x6 (300 X 150 mm)	207' (63 m)
	12x8 (300 X 200 mm)	151' (46 m)

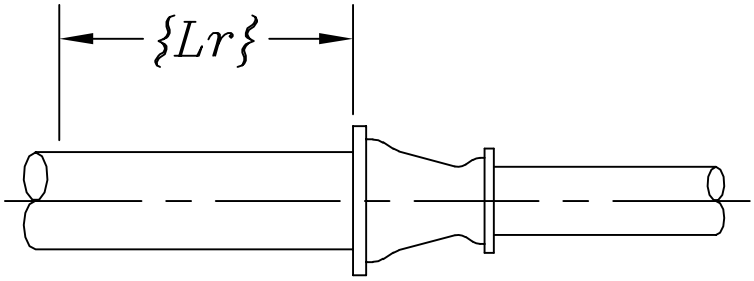

REDUCERS

The minimum length of pipe (Lr) to be restrained on the large side of the reducer shall be derived from the above table.

DEAD END SIZE & PIPE MATERIAL		MINIMUM RESTRAINED LENGTH
PVC PIPE	4 (100 mm)	74' (22.6 m)
	6 (150 mm)	104' (32 m)
	8 (200 mm)	135' (41 m)
	12 (300 mm)	189' (58 m)
DI POLY WRAP	4 (100 mm)	112' (34 m)
	6 (150 mm)	157' (48 m)
	8 (200 mm)	204' (62 m)
	12 (300 mm)	284' (87 m)

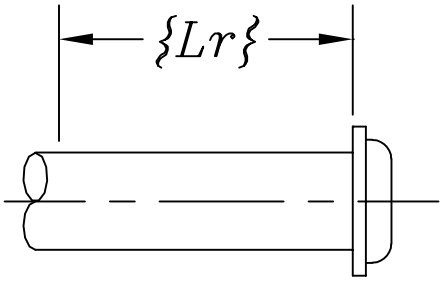

DEAD ENDS

The minimum length of pipe (Lr) to be restrained on a dead end shall be derived from the above table.

Or concrete blocks may be used with permission of the Engineer.

ISSUED:		STANDARD DETAIL		DETAIL NO.
6/97	TUCSON WATER	WSM RESTRAINED JOINTS	THE SEAL of PIMA COUNTY ARIZONA	W-600
REVISED:				
10/02				SHEET 5 OF 5

CONCRETE THRUST BLOCKING

NOTES:

1. The use of portland cement concrete thrust blocks is not permissible except as shown on the plans or with the approval of the Engineer.

   Portland cement concrete thrust blocks shall be placed against undisturbed earth. Where it is not practical to place the concrete thrust block against undisturbed earth, the fill material placed between the pipe's bearing surface and the undisturbed soil shall be compacted to a minimum of 95% of the maximum density as determined in accordance with the requirements of the applicable test methods of the ADOT Materials Testing Manual.

2. The tables found on sheets 2, 3, and 4 of 4 are based on the following:

   a) 200 PSI (1.4 MPa) internal pressure.
   b) 1500 PSF (70 kPa) soil bearing pressure.
   c) Class B, 2500 (20 MPa) portland cement concrete per Standard Specification Section 1006, Standard Specifications for Public Improvements.
   d) The corresponding weight of the concrete (Class B) is equal to or greater than the vertical component of thrust on the vertical bend.

3. Dimensions may be varied as required by field conditions where and as directed by the engineer. The volumes of concrete thrust blocking shall not be less than shown.

4. Earth trench conditions: The "C" dimension shall be as shown. The concrete blocking must be poured against firm soil.

5. Unstable soil: the engineer shall determine if additional thrust blocking is required. The "C" dimension shall be increased as directed by the engineer, based on geotechnical evaluations of the site soils.

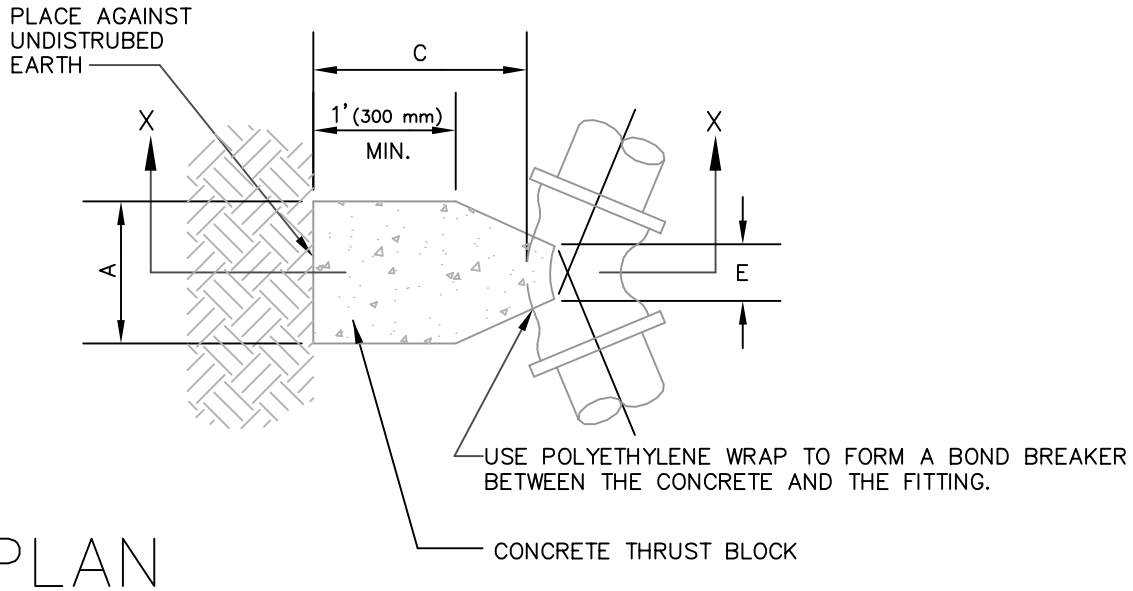

PLAN

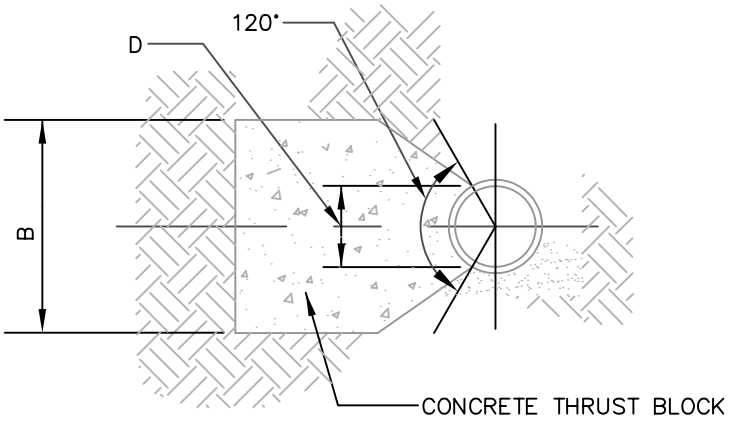

SECTION XX

NOMINAL PIPE SIZE	HORIZONTAL BENDS									
	11 1/4°					22 1/2°				
	A	B	C	D	E	A	B	C	D	E
4" (100 mm)	1.0' (300 mm)	1.0' (300 mm)	1.5' (460 mm)	0.4' (120 mm)	0.4' (120 mm)	1.0' (300 mm)	1.5' (460 mm)	1.5' (460 mm)	0.4' (120 mm)	0.8' (240 mm)
6" (150 mm)	1.0' (300 mm)	1.5' (460 mm)	1.5' (460 mm)	0.6' (180 mm)	0.4' (120 mm)	1.5' (460 mm)	1.5' (460 mm)	1.5' (460 mm)	0.6' (180 mm)	0.8' (240 mm)
8" (200 mm)	1.0' (300 mm)	2.5' (760 mm)	1.5' (460 mm)	0.7' (210 mm)	0.4' (120 mm)	1.5' (460 mm)	2.5' (760 mm)	1.5' (460 mm)	0.7' (210 mm)	0.8' (240 mm)
12" (300 mm)	1.5' (460 mm)	2.5' (760 mm)	1.5' (460 mm)	1.0' (300 mm)	0.6' (180mm)	3.0' (910 mm)	2.5' (760 mm)	1.5' (460 mm)	1.0' (300 mm)	1.1' (340 mm)

NOMINAL PIPE SIZE	HORIZONTAL BENDS									
	45°					90°				
	A	B	C	D	E	A	B	C	D	E
4" (100 mm)	2.0' (610 mm)	1.5' (460 mm)	1.5' (460 mm)	0.4' (120 mm)	0.4' (120 mm)	3.5' (1.1 m)	1.5' (460 mm)	1.5' (460 mm)	0.4' (120 mm)	0.4' (120 mm)
6" (150 mm)	2.5' (760 mm)	1.5' (460 mm)	1.5' (460 mm)	0.6' (180 mm)	0.4' (120 mm)	5.0' (1.5 m)	1.5' (460 mm)	1.5' (460 mm)	0.6' (180 mm)	0.4' (120 mm)
8" (200 mm)	3.0' (910 mm)	2.5' (760 mm)	1.5' (460 mm)	0.7' (210 mm)	0.4' (120 mm)	7.5' (2.3 m)	1.5' (460 mm)	2.5' (760 mm)	0.7' (210 mm)	0.4' (120 mm)
12" (300 mm)	6.0' (1.83 m)	2.5' (760 mm)	1.5' (460 mm)	1.0' (300 mm)	0.5' (150 mm)	10.5' (3.2 m)	2.5' (760 mm)	2.5' (760 mm)	1.0' (300 mm)	0.5' (150 mm)

ISSUED:		STANDARD DETAIL		DETAIL NO.
6/97	TUCSON WATER	WSM CONCRETE THRUST BLOCKING	THE SEAL of PIMA COUNTY ARIZONA	W-610
REVISED:				
10/02				SHEET 2 OF 4

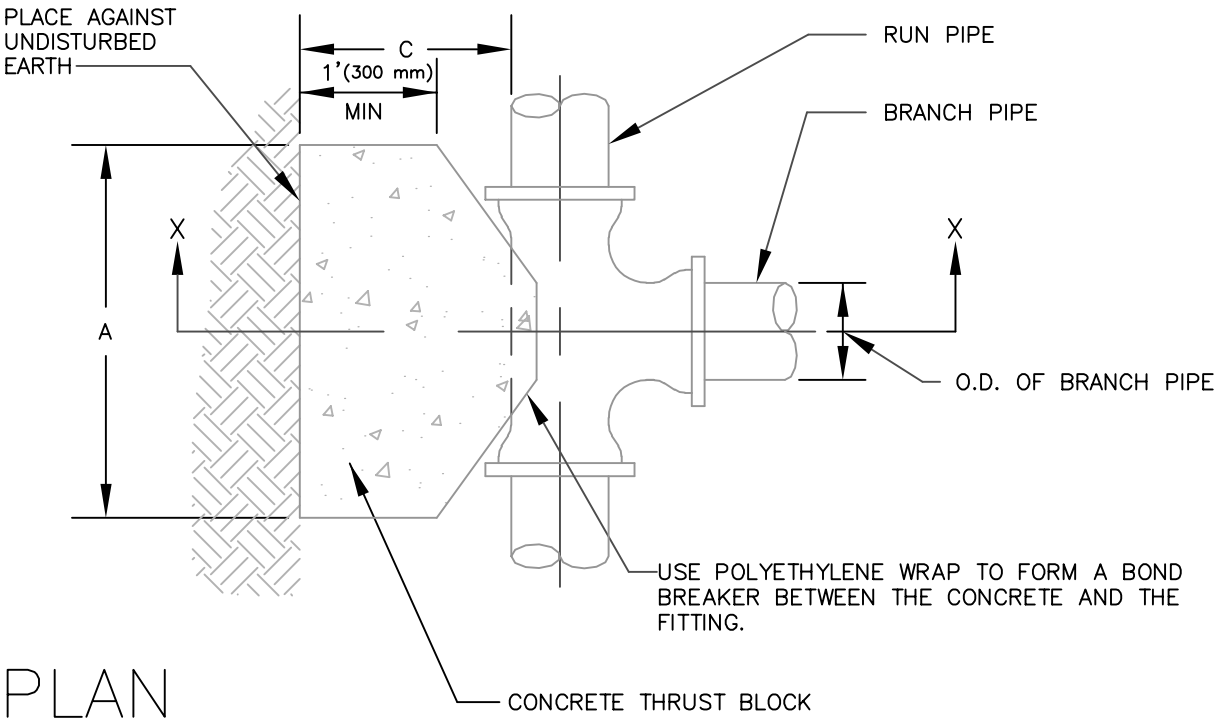

PLAN

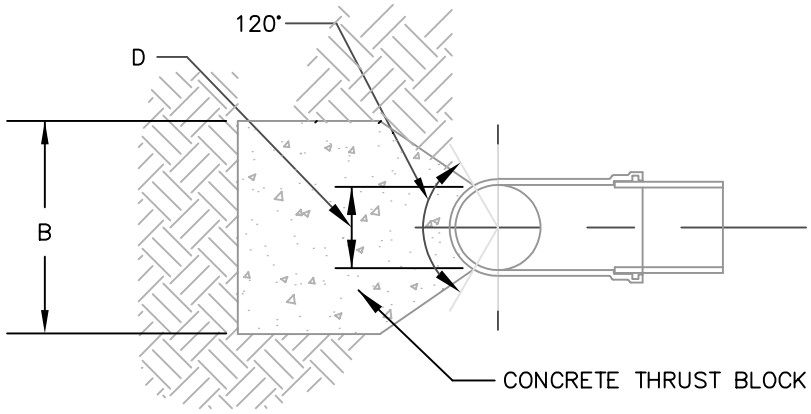

SECTION XX

BRANCH PIPE SIZE*	A	B	C	D
4" (100 mm)	2.5'(760 mm)	1.5' (460 mm)	1.5' (460 mm)	0.4' (120 mm)
6" (150 mm)	3.5' (1.07 m)	1.5' (460 mm)	1.5' (460 mm)	0.6' (180 mm)
8" (200 mm)	3.5' (1.07 m)	2.5'(760 mm)	1.5' (460 mm)	0.7' (210 mm)
12" (300 mm)	7.5' (2.29 m)	2.5'(760 mm)	1.5' (460 mm)	1.0' (300 mm)

*FOR DEAD END FITTINGS
USE THRUST BLOCK DIMENSIONS
FOR SAME SIZE BRANCH PIPE

ISSUED:		STANDARD DETAIL		DETAIL NO.
6/97	TUCSON WATER	WSM CONCRETE THRUST BLOCKING	THE SEAL of PIMA COUNTY ARIZONA	W-610
REVISED:				
10/02				SHEET 3 OF 4

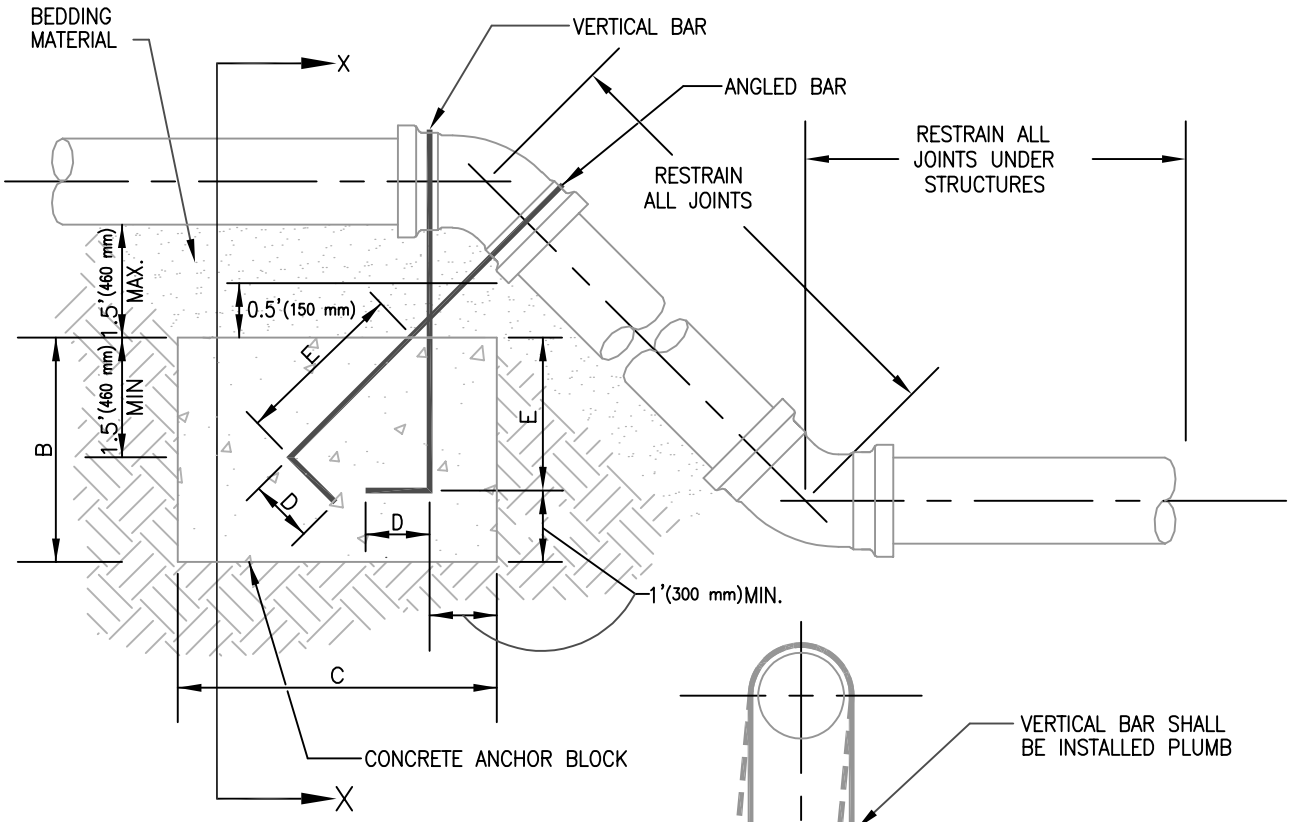

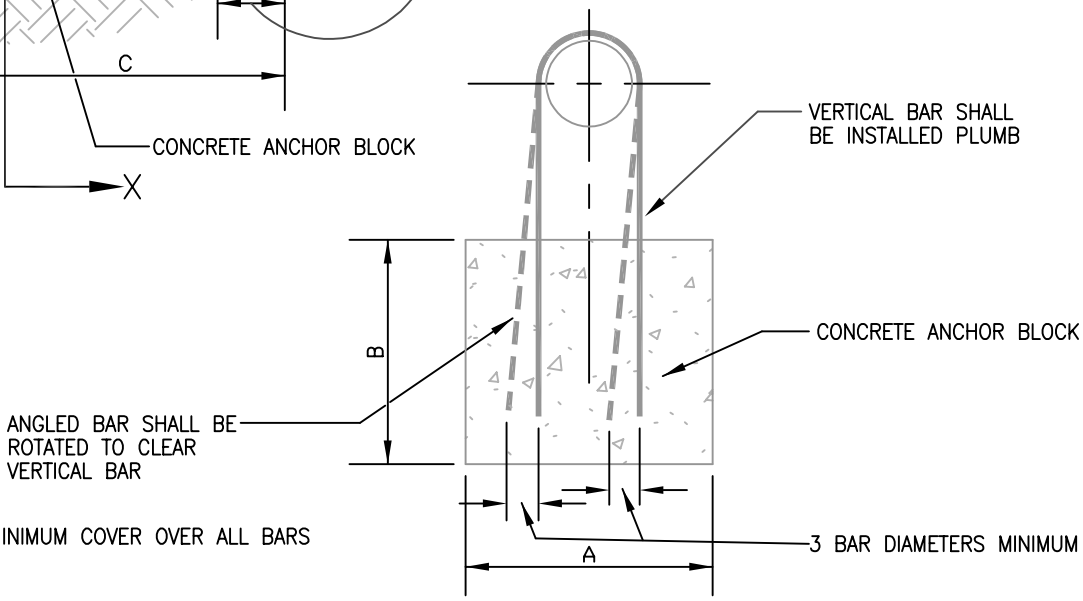

NOTE:
3"(75 mm) MINIMUM COVER OVER ALL BARS

SECTION XX

NOMINAL PIPE SIZE	VERTICAL BENDS											
	11 1/4°						22 1/2°					
	A	B	C	BAR SIZE	D	E	A	B	C	BAR SIZE	D	E
4"(100mm)	1.5'(460 mm)	2.0'(610 mm)	2.0'(610 mm)	#4 (No. 13)	0.5'(150 mm)	1.0'(300 mm)	2.0'(610 mm)	2.5'(760 mm)	2.0'(610 mm)	#4 (No. 13)	0.5'(150 mm)	1.0'(300 mm)
6"(150mm)	2.0'(610 mm)	2.0'(610 mm)	3.0'(910 mm)	#4 (No. 13)	0.5'(150 mm)	1.0'(300 mm)	2.0'(610 mm)	3.5' (1.1 m)	3.0'(910 mm)	#4 (No. 13)	0.5'(150 mm)	1.0'(300 mm)
8"(200mm)	2.0'(610 mm)	3.0'(910 mm)	3.0'(910 mm)	#4 (No. 13)	0.5'(150 mm)	1.2'(370 mm)	2.5'(760 mm)	4.5' (1.4 m)	3.0'(910 mm)	#5 (No. 16)	0.7'(210 mm)	1.2'(370 mm)
12"(300mm)	3.0'(910 mm)	4.0' (1.2 m)	3.0'(910 mm)	#5 (No. 16)	0.7'(210 mm)	1.4'(430 mm)	3.0'(910 mm)	6.0' (1.8 m)	4.0' (1.2 m)	#6 (No. 19)	0.8'(240 mm)	1.4'(430 mm)

NOMINAL PIPE SIZE	VERTICAL BENDS					
	45°					
	A	B	C	BAR SIZE	D	E
4"(160mm)	2.0'(610 mm)	2.5'(610 mm)	3.0'(910 mm)	#4 (No. 13)	0.5'(150 mm)	1.0'(300 mm)
6"(150mm)	3.0'(910 mm)	4.0' (1.2 m)	3.0'(910 mm)	#5 (No. 16)	0.7'(210 mm)	1.0'(300 mm)
8"(200mm)	3.0'(910 mm)	5.5' (1.7 m)	4.0' (1.2 m)	#6 (No. 19)	0.8'(240 mm)	1.2'(370 mm)
12"(300mm)	4.0' (1.2 m)	6.5' (2.0 m)	5.0' (1.5 m)	#7 (No. 22)	1.0'(300 mm)	1.4'(430 mm)

90° BENDS ARE NOT RECOMMENDED

ISSUED:		STANDARD DETAIL		DETAIL NO.
6/97	TUCSON WATER	WSM CONCRETE THRUST BLOCKING	THE SEAL of PIMA COUNTY ARIZONA	W-610
REVISED:				
10/02				SHEET 4 OF 4

CORROSION MONITORING SYSTEM

NOTES:

1. All ductile iron fittings, mechanically restrained fittings, bolted joint assemblies, gasketed joint assemblies, pipe sections and butterfly valves shall be bonded with a minimum of two (2) HMW/PE stranded copper conductors, see Std. Det. W–702. Conductors are to be sized according to the following formula:

   THE ELECTRICAL RESISTANCE DUE TO BONDING CONDUCTORS PER 1,000 (300 m) FEET OF PIPE SHALL NOT EXCEED 150 PERCENT WHEN COMPARED TO THE ELECTRICAL RESISTANCE OF 1,000 FEET (300 m) OF PIPE WHEN CALCULATED.

   $$I=(1+R_B/R_P)100$$

   WHERE:

   I=PERCENT INCREASE IN ELECTRICAL RESISTANCE
   R_B=RESISTANCE IN ohms OF THE BONDING CONDUCTORS PER 1,000 (300 m) FEET OF PIPE.
   R_P=RESISTANCE IN ohms OF 1,000 (300 m) FEET OF PIPE CALCULATED AS FOLLOWS:
   $R = 0.22/W_P$ $(0.33/W_{PM})$ (STEEL, CCP & PCCP)
   $R = 0.86/W_P$ $(1.29/W_{PM})$ (DIP)
   W_P = Weight of steel in pounds per foot length of pipe.
   (W_{PM} = Mass of steel in kg per meter length of pipe.)

2. Fully welded concrete cylinder pipe (CCP or PCCP) pipe joints shall not require continuity bonding clips, or bonding conductors. See Std. Det. W–702.

3. Each exothermic weld, stranded copper conductors and exposed portions of the pipe shall be covered with an approved exothermic welding cap as per manufacturer recommendations. If not applicable, an approved coating product will be used as per manufacturers recommendation.

   APPROVED PRODUCTS ARE AS FOLLOWS:

EXOTHERMIC WELDING CAP	COATING PRODUCT
CALPICO MODEL 'T' CAP	ROYSTON ROSKOTE R–28
CALPICO #22 PRIMER	CALPICO #10 MASTIC
ROYSTON HANDY CAP	
ROYSTON #747 PRIMER	

4. All new HMW/PE stranded copper conductors shall be continuous (without splices) from the connection at the pipe, anodes, fittings, valves, etc. to the corrosion test station (CTS).

5. HMW/PE stranded copper conductors shall be bundled together with the appropriately colored vinyl electrical tape at maximum 3' (910 mm) intervals between pipe, anodes, fittings, valves, etc. and the CTS. Vinyl electrical tape shall be 3M Super 33+, Scotch Brand or approved equal. HMW/PE stranded copper conductors shall be bundled at maximum 6" (150 mm) intervals inside the pvc riser and the CTS. Test conductors are to be placed at least 3' (910 mm) below finished grade. Color coding shall be as follows:

   TYPE 1–WHITE STRANDED COPPER CONDUCTORS FROM A TRANSMISSION MAIN
   TYPE 2–BLUE STRANDED COPPER CONDUCTORS FROM A PIPE'S CASING
   TYPE 3–BLACK OR YELLOW STRANDED COPPER CONDUCTORS FROM A FOREIGN METALLIC PIPE
   TYPE 4–ORANGE STRANDED COPPER CONDUCTORS FROM AN ISOLATED PIPE, VALVE, FITTING ETC.
   TYPE 5–RED STRANDED COPPER CONDUCTORS FROM ANODES
   ——— GREEN NEGATIVE STRUCTURE LEAD TO RECTIFIER OFF OF PROTECTED PIPE
   ——— YELLOW PERMANENT REFERENCE CELL LEAD

6. All HMW/PE stranded copper conductors shall have a minimum of 24"(610 mm) of slack near the pipe joint and specified slack within the corrosion test stations. See Std. Det. W–705, W–706 and W–710.

7. All HMW/PE stranded copper conductors shall be brought up from the pipe joint nearest to the CTS indicated on the drawings. Shop drawings shall depict connection details at joints.

NOTES: (CONT'D)

8. HMW/PE stranded copper conductor shall be identified by surface markings indicating "CONDUCTOR SIZE", "MANUFACTURER", and "HMW/PE".

9. The flush to grade corrosion test station Std. Det. W–705 shall be field located for permanency 2 feet (610 mm) behind present or future curb. The above grade corrosion test station Std. Det. W–706 shall be field located 12 feet (3.7 m) beyond pavement edges where no curbs exist, or 2 feet (610 mm) from property line, fences, easements or as otherwise shown on plans.

10. Flush grade corrosion test station HMW/PE stranded copper conductors shall be terminated on a linen grade phenolic resin board as per Std. Det. W–705 Sheet 2.

11. Grade corrosion test station HMW/PE stranded copper conductors shall be terminated as per Std. Det. W–706.

12. Acceptable paints to be used on below grade corrosion test stations are:

DARK BLUE (POTABLE)	PURPLE (RECLAIMED)
SEYMOUR PRECAUTION BLUE	SEYMOUR SAFETY PURPLE
SPRAY ON APWA BLUE	

13. Contact the following utilities at least two weeks prior to excavating in the area of a foreign line owned by one of the following companies:

COMPANY	PHONE
SOUTHWEST GAS	520–794–6025
EL PASO NATURAL GAS	520–663–4258
KINDER MORGAN ENERGY PARTNERS	520–746–4985
U.S. BUREAU OF RECLAMATION	520–616–0224
TEXACO UST SITES	520–539–4229
EXXON UST SITES	602–294–5137
UNION UST SITES	602–294–5137
CIRCLE K UST SITES	602–294–5137
PIMA COUNTY WASTEWATER MANAGEMENT*	520–740–6625

*WHEN DUCTILE IRON SECTIONS OF SANITARY SEWER SYSTEMS ARE ENCOUNTERED

The contractor may be required to uncover the foreign line so that others can attach the HMW/PE stranded copper conductors to the foreign line. The contractor shall furnish materials and may be required to install all HMW/PE stranded copper conductors from the foreign line to the corrosion test station.

14. Concrete shall have a 28 day compressive strength of 2500 PSI (20 MPa).

15. 24 hours prior to beginning construction and after relocation of any corrosion test station the water utility's NACE technician shall verify all pipe joints and fittings are bonded and electrically continuous.

16. For splicing, the contractor shall extend the existing conductors with new HMW/PE stranded copper conductor of the same gauge. If the existing conductors are not of the #10(6 mm^2), #8(10 mm^2), or #6(16 mm^2) size, the Engineer shall be contacted for instruction. New HMW/PE stranded copper conductor shall be spliced to the existing same size conductor by "butting" stripped conductor ends together inside on an appropriately sized aluminum compression connector. The connector shall be crimped. The new connection shall be sealed with a hot shrink splice for non–shielded conductors. The shrink splice shall be of the appropriate size to completely cover the aluminum compression connector, and any exposed wire, and shrunk to form a water tight seal. See Std. Det. W–707.

NOTES: (CONT'D)

17. Upon completion of the installation of the pipe lines, including backfill and compaction and/or the relocation of existing corrosion test stations, the contractor shall perform the following tests on the corrosion monitoring system.
    A. Test CTS integrity – by applying current to the pipeline and recording the I(on) and I(off) potentials at each corrosion test station.
    B. Effectiveness of flange insulating kits installed. Test prior to and after backfill.
    C. Casing isloation.
    D. Pipe–to–soils potentials at each corrosion test station.
    E. Pipeline electrical continuity. (Electrical continuity bonds) The contractor shall obtain a resistance of less than 0.03 OHMS between any component and the pipe cylinder.
    F. Pipeline span resistance between adjacent corrosion test stations.
    G. Soil resistivity at each test station at depths of 5 (1.5 m),10 (3 m) and 15 feet (4.6 m) using the "Wenner Four Pin" method.
    H. Test for and describe corrections made for interference effects from or to all adjacent utility systems and structures. These tests and corrections shall be coordinated with respective utility operators.
    I. Verification that each new or related corrosion component is installed per the City of Tucson Standard Water Works Specifications and working as designed. This includes anodes and zinc cap installations.
    J. Identification of any existing or potential "hot spot" where corrosion is a concern.
    K. Compare the theoretical resistivity to the actual resistivity of the transmission main.
    L. Test existing corrosion test stations prior to and after backfill.

    A final corrosion report shall be submitted. The final report shall include all test data and associated calculations, make of pipe, and pipe sizes. The report shall be clear and concise.

18. The contractor shall retain the services of a NACE certified technician or cathodic protection technologist. The contractor shall furnish a list of all equipment and labor required to perform all testing. All tests shall be performed under the direct supervision of a NACE certified corrosion technician. If any of the tests fail to meet the requirements set forth above, the contractor shall perform all repairs and retests at no cost to the Agency. All test results will be submitted in report form to the Engineer for review and approval within ten (10) days of the last test date and prior to final acceptance. The test information will include test personnel name(s), test date(s), pipeline station(s) at test point(s). A complete list and type of test equipment used to perform all testing and a brief description of pipeline components–such as valve(s), restrained joint(s) or flanges(s) at test points(s). All testing shall be conducted per sound corrosion engineering practices as determined by the engineer.

    All deficiencies found during testing shall be corrected by the contractor.

19. The contractor shall salvage any existing corrosion test box(es), lid(s), extension(s) and phenolic resin terminal board(s). All salvage components shall be returned to the water utility, in accordance with Std. Det. W–105 Note 26.

20. Upon completion and 24 hours prior to burial, the Tucson Water NACE technician shall verify the following:
    * VERIFY THE EFFECTIVENESS OF EXISTING CORROSION TEST STATION(S) BOTH PRIOR TO AND AFTER RELOCATION.
    * VERIFY THE EFFECTIVENESS OF ANY FLANGE INSULATING KIT AND/OR DIELECTRIC UNION NOT BEING MONITORED BY A CORROSION TEST STATION.
    * VERIFY THAT THE MAIN IS NOT IN CONTACT AND SHORTED TO THE CASING.
    * VERIFY THAT THE ANODES ARE PROPERLY INSTALLED.
    * VERIFY THE PROPER INSTALLATION OF ZINC CAPS.

    Verification and/or test results shall be included in the final corrosion test report per Section 17 above. The Engineer shall call the water utility's NACE technician to coordinate the items listed above.

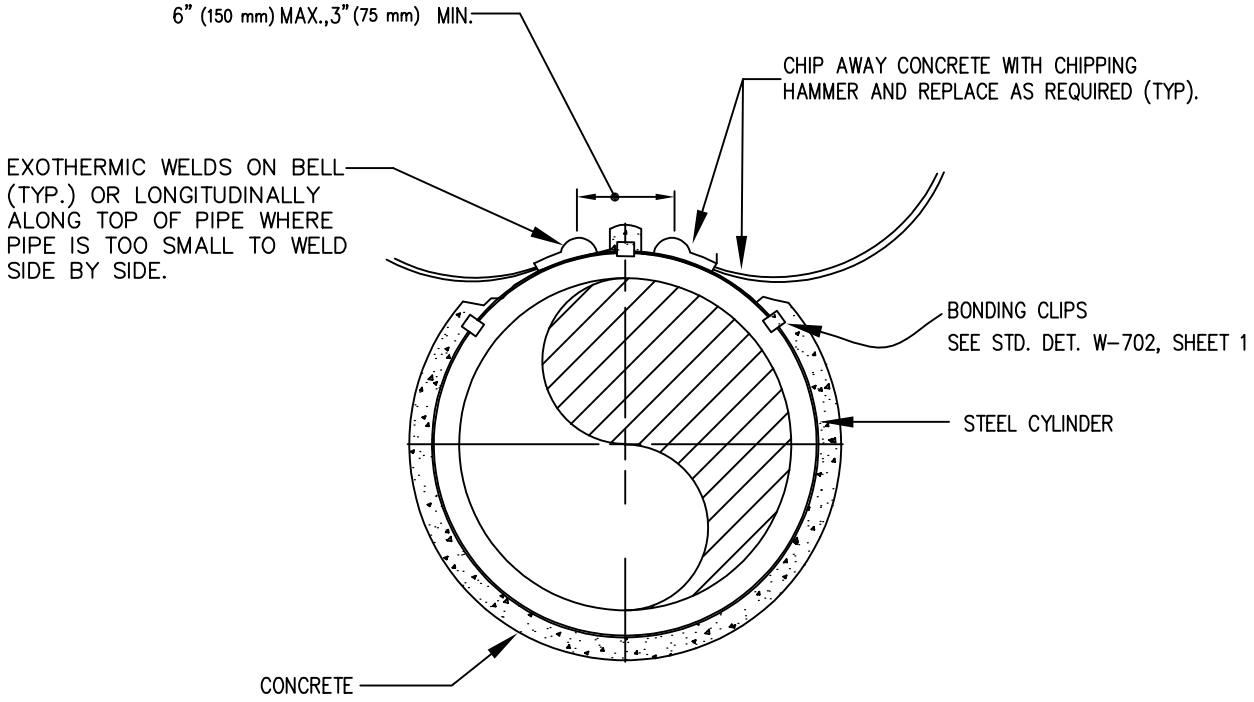

PRESTRESSED CONCRETE CYLINDER PIPE (PCCP) OR
CONCRETE CYLINDER PIPE (CCP)

NOTES:

1. EXOTHERMIC WELDS SHALL BE INSTALLED ONLY ON BELL.

ISSUED:		STANDARD DETAIL		DETAIL NO.
6/97	TUCSON WATER	WSM TEST LEAD PLACEMENT	THE SEAL of PIMA COUNTY ARIZONA	W-701
REVISED:				
10/02				SHEET 1 OF 3

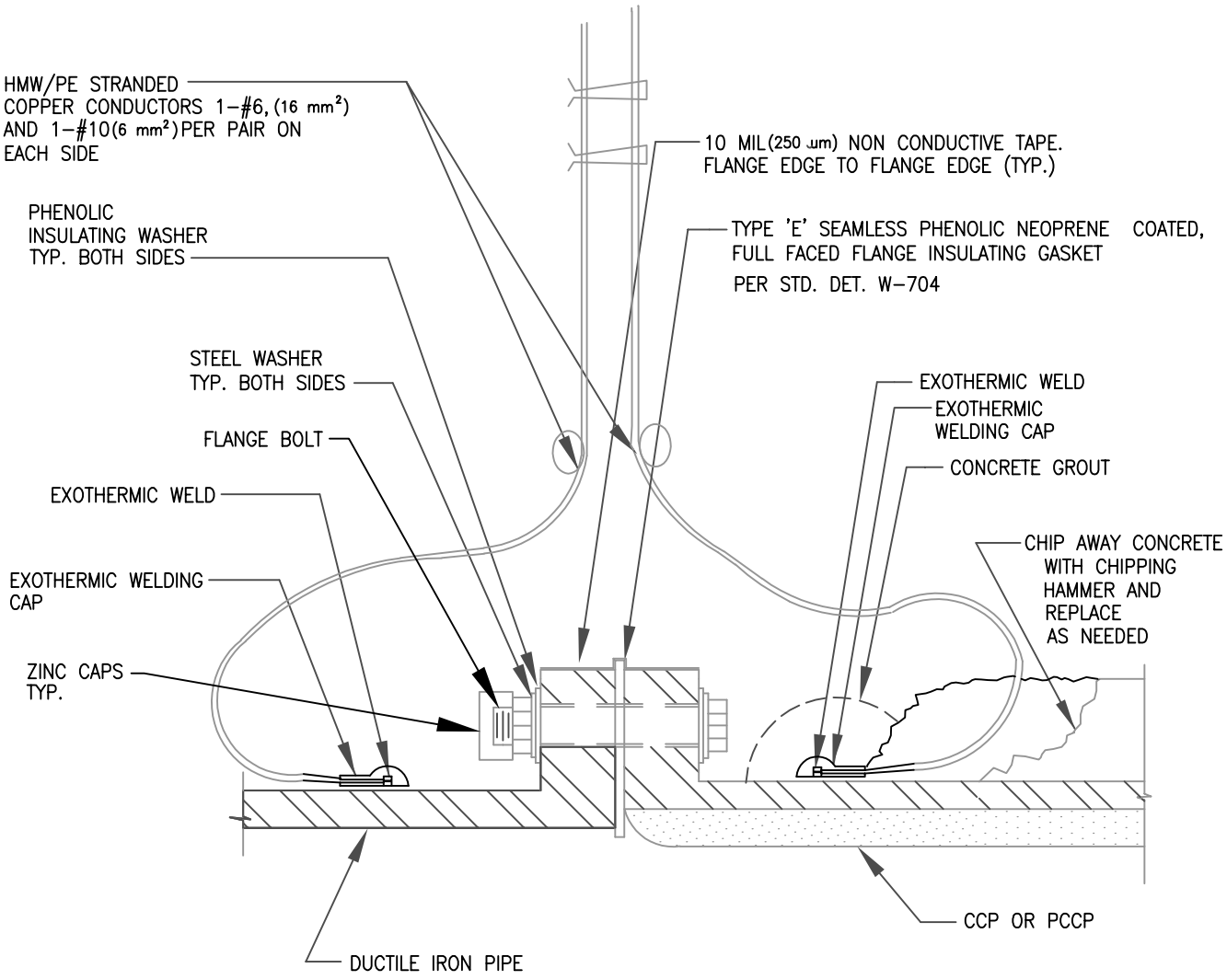

NOTE:

EXOTHERMIC WELDING ON FLANGES IS ACCEPTABLE.

ISSUED:		STANDARD DETAIL		DETAIL NO.
6/97	TUCSON WATER	WSM TEST LEAD PLACEMENT	THE SEAL of PIMA COUNTY ARIZONA	W-701
REVISED:				
10/02				SHEET 2 OF 3

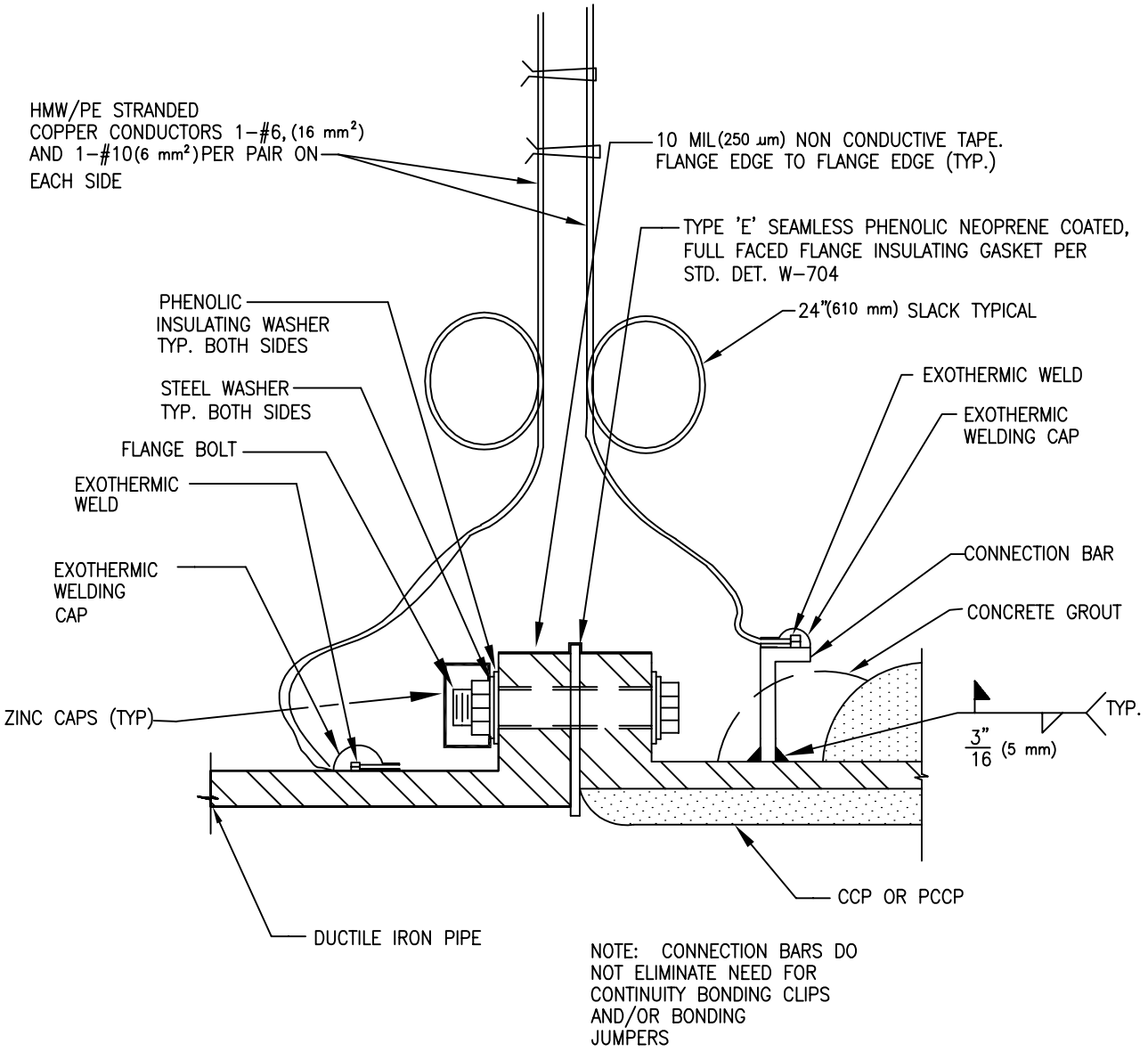

NOTE: CONNECTION BARS DO NOT ELIMINATE NEED FOR CONTINUITY BONDING CLIPS AND/OR BONDING JUMPERS

NOTE: EXOTHERMIC WELDING ON FLANGES IS ACCEPTABLE

ISSUED:		STANDARD DETAIL		DETAIL NO.
6/97	TUCSON WATER	WSM TEST LEAD PLACEMENT	THE SEAL of PIMA COUNTY ARIZONA	W-701
REVISED:				
10/02				SHEET 3 OF 3

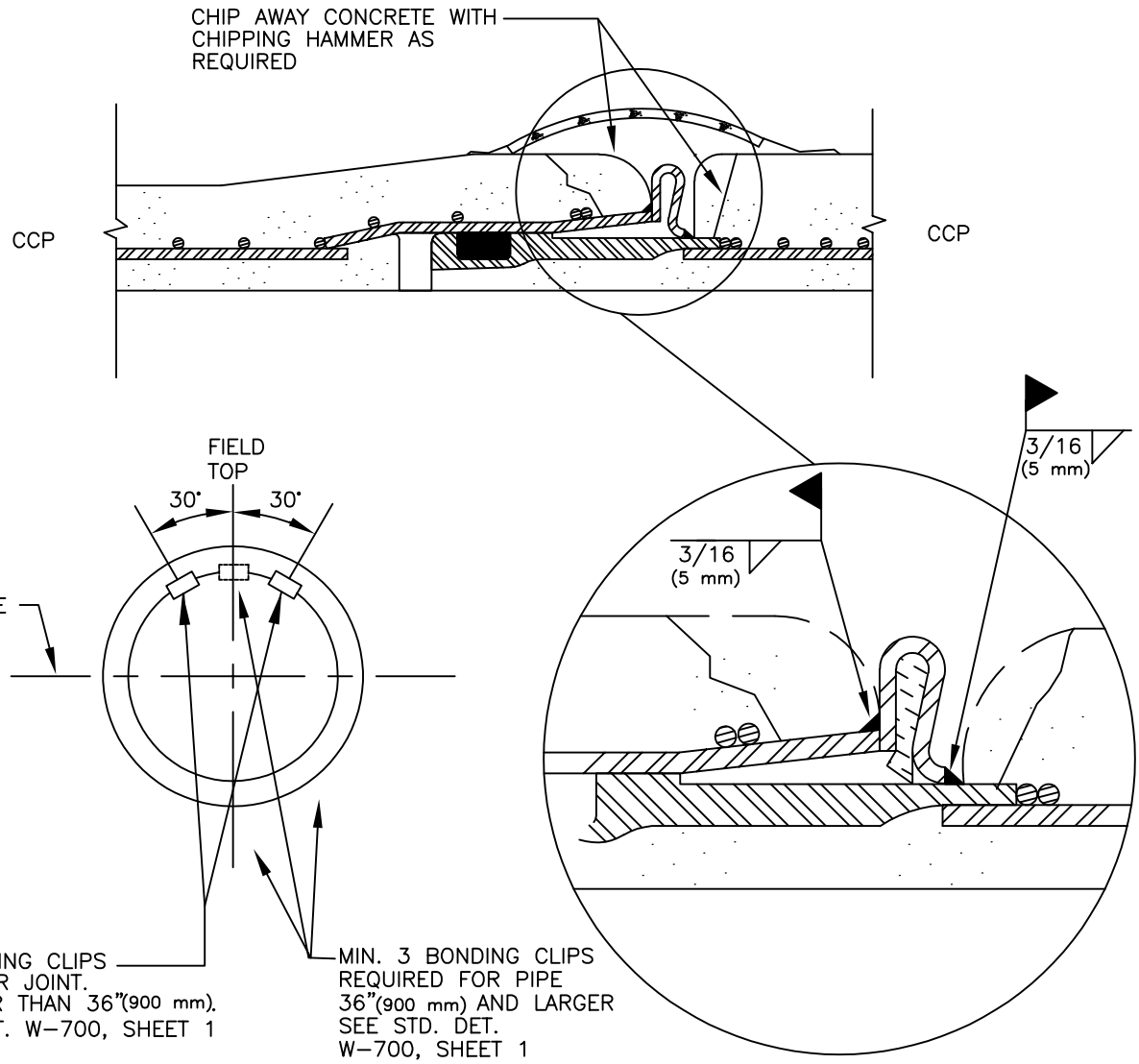

FIELD INSTALLATION PRODEDURE:
PLACE BONDING CLIPS IN EXTERIOR JOINT RECESS AS SHOWN. WELD CLIPS TO BELL AND SPIGOT USING FILLET WELDS AS SHOWN. REMOVE SLAG FROM WELD AND FILL RECESS WITH CEMENT MORTAR COVERING ALL EXPOSED STEEL.

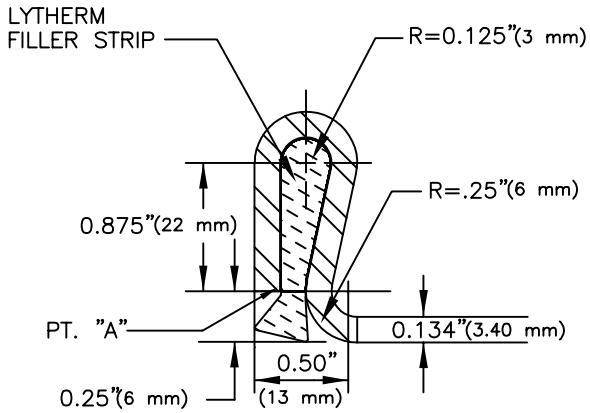

CLIP DETAIL

NOTES:

1. STEEL BONDING CLIP:
   MATERIAL SPEC.....ASTM A366
   CUT LENGTH.....2–1/2"(64 mm) ± 1/16"(2 mm)
   WIDTH.....1–1/4"(32 mm) ± 1/16"(2 mm)
2. LYTHERM FILLER STRIP TO BE 1"(25 mm) X 1–1/2"(38 mm) WIDE TO OVERLAP SIDES OF CLIP
3. BONDING CLIP CRIMPED OVER FILLER AT "A' TO COMPRESS FILLER

CASE 1
FOR CONCRETE CYLINDER PIPE

ISSUED:		STANDARD DETAIL		DETAIL NO.
6/97	TUCSON WATER	WSM PIPE JOINT BONDING	THE SEAL of PIMA COUNTY ARIZONA	W-702
REVISED:				
10/02				SHEET 1 OF 3

NOTES: 1. REMOVE MORTAR WITH A CHIPPING HAMMER TO PROVIDE CLEARANCE FOR WELDING.
2. INSTALL A MINIMUM OF 2 BONDING JUMPERS ITH 1/2"(13 mm) SLACK.
3. COAT WELD & BONDS WITH A COAL TAR EPOXY.
4. REPLACE CONCRETE MORTAR

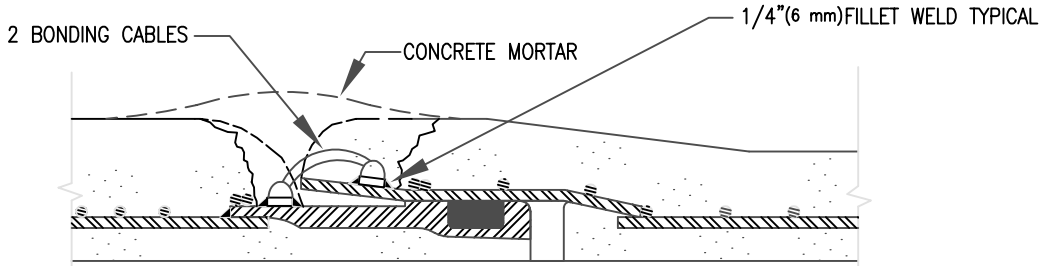

SECTION A–A

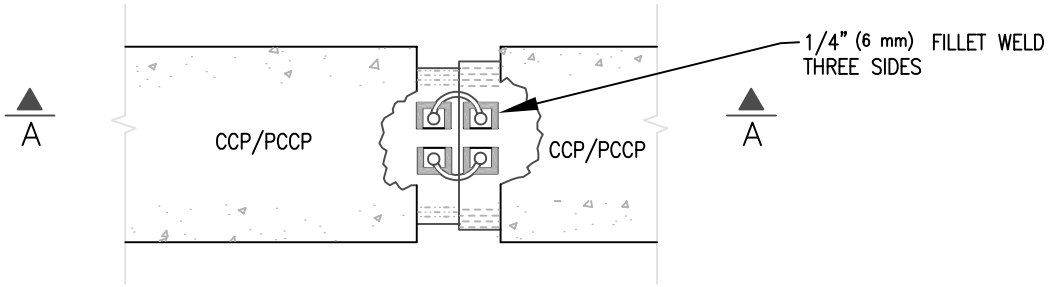

PLAN VIEW

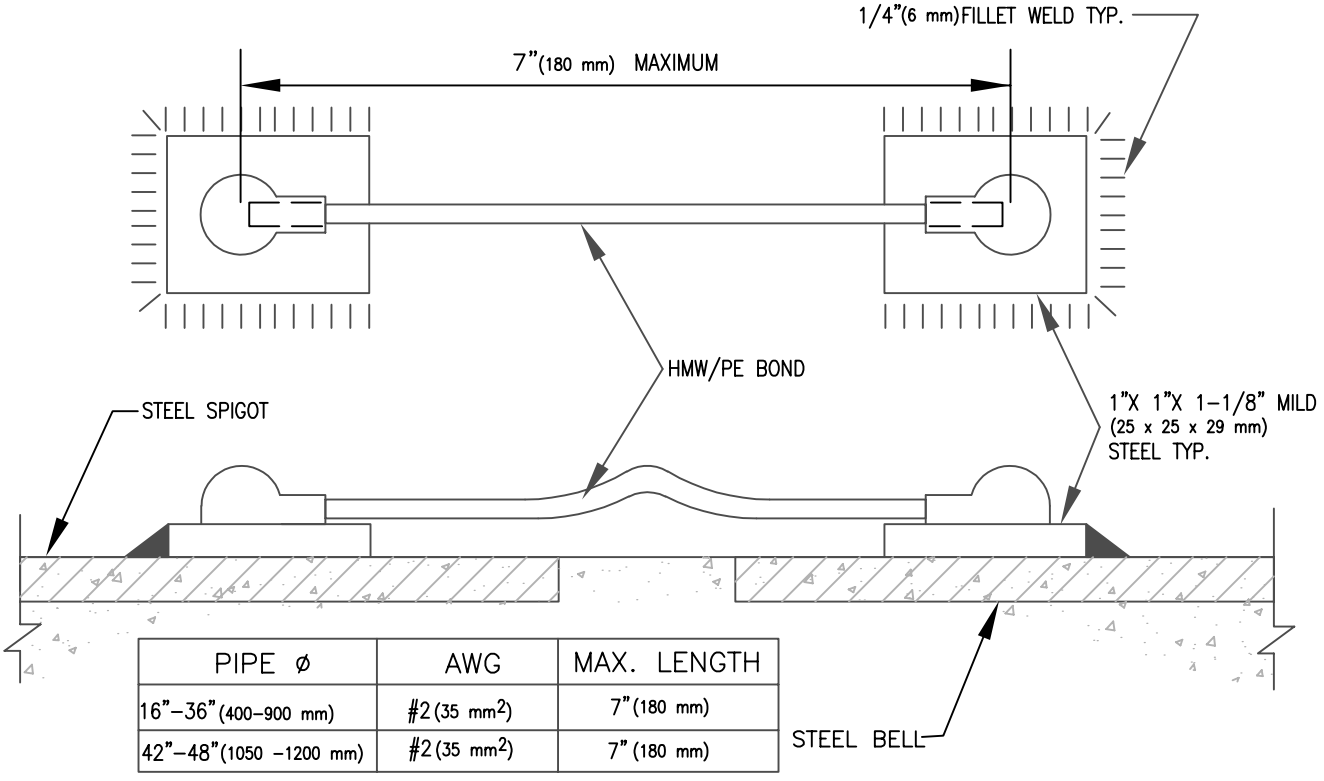

PIPE ø	AWG	MAX. LENGTH
16"–36"(400–900 mm)	#2(35 mm^2)	7"(180 mm)
42"–48"(1050 –1200 mm)	#2(35 mm^2)	7" (180 mm)

CASE 2 BONDING CONDUCTORS
FOR CONCRETE CYLINDER PIPE

ISSUED:		STANDARD DETAIL		DETAIL NO.
6/97	TUCSON WATER	WSM PIPE JOINT BONDING	THE SEAL of PIMA COUNTY ARIZONA	W-702
REVISED:				
10/02				SHEET 2 OF 3

MINIMUM OF TWO (2) BONDING JUMPERS ARE REQUIRED PER PIPE JOINT SMALLER THAN 36"(900 mm)

MINIMUM OF THREE (3) BONDING JUMPERS ARE REQUIRED PER PIPE JOINT FOR PIPE 36"(900 mm)AND LARGER

SEE STD. DET. W-700, SHEET 1, NOTE 1

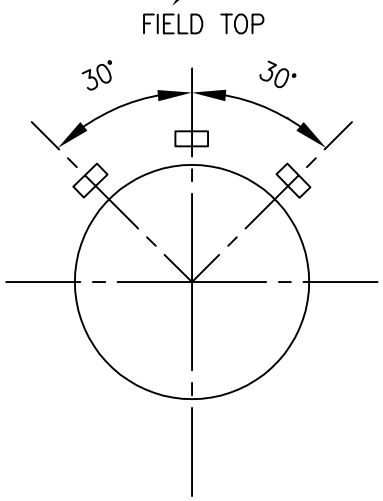

MIN. TWO (2) HMW/PE STRANDED COPPER BONDING JUMPERS CONNECTED TO PIPE AND FITTINGS BY MEANS OF EXOTHERMIC WELDING. USE MFG'S RECOMMENDED WELDER, CARTRIDGE SIZE, ADAPTER SLEEVE, ETC. FOR DUCTILE IRON PIPE (TYP.)

AFTER WELDING BONDING JUMPERS TO PIPE, APPLY EXOTHERMIC WELDING CAP, PER MANUFACTURER RECOMMENDATIONS. SEE STD. DET. W-700, SHEET 1, NOTE 3

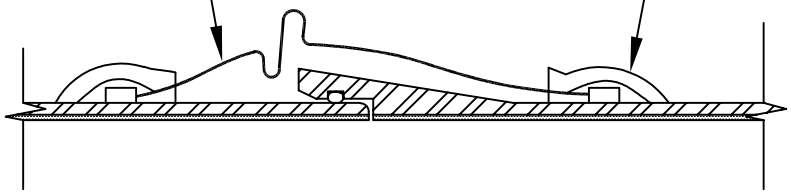

DIP BONDING CONDUCTOR INSTALLATION

CLEAN PIPE TO BRIGHT METAL IN AREAS WHERE BOND LEADS ARE TO BE ATTACHED (TYP.).

BONDING CONDUCTORS SHALL HAVE SUFFICIENT SLACK TO ALLOW FOR A TOTAL JOINT DISPLACEMENT OF ONE-HALF(1/2)(13 mm)INCH.

BONDING CABLES			
D.I.P. CLASS 350			
PIPE	NO.	AWG	MAX. LENGTH
16" (400 mm)	2	6 (16 mm^2)	24" (600 mm)
24" (600 mm)	2	4 (25 mm^2)	24" (600 mm)
30" (750 mm)	2	2 (35 mm^2)	24" (600 mm)
36" (900 mm)	3	4 (25 mm^2)	24" (600 mm)
42-48"(1050-1200 mm)	3	2 (35 mm^2)	24" (600 mm)

FOR DUCTILE IRON PIPE

ISSUED:		STANDARD DETAIL		DETAIL NO.
6/97	TUCSON WATER	WSM PIPE JOINT BONDING	THE SEAL of PIMA COUNTY ARIZONA	W-702
REVISED:				
10/02				SHEET 3 OF 3

EXOTHERMIC WELDING PROCEDURES

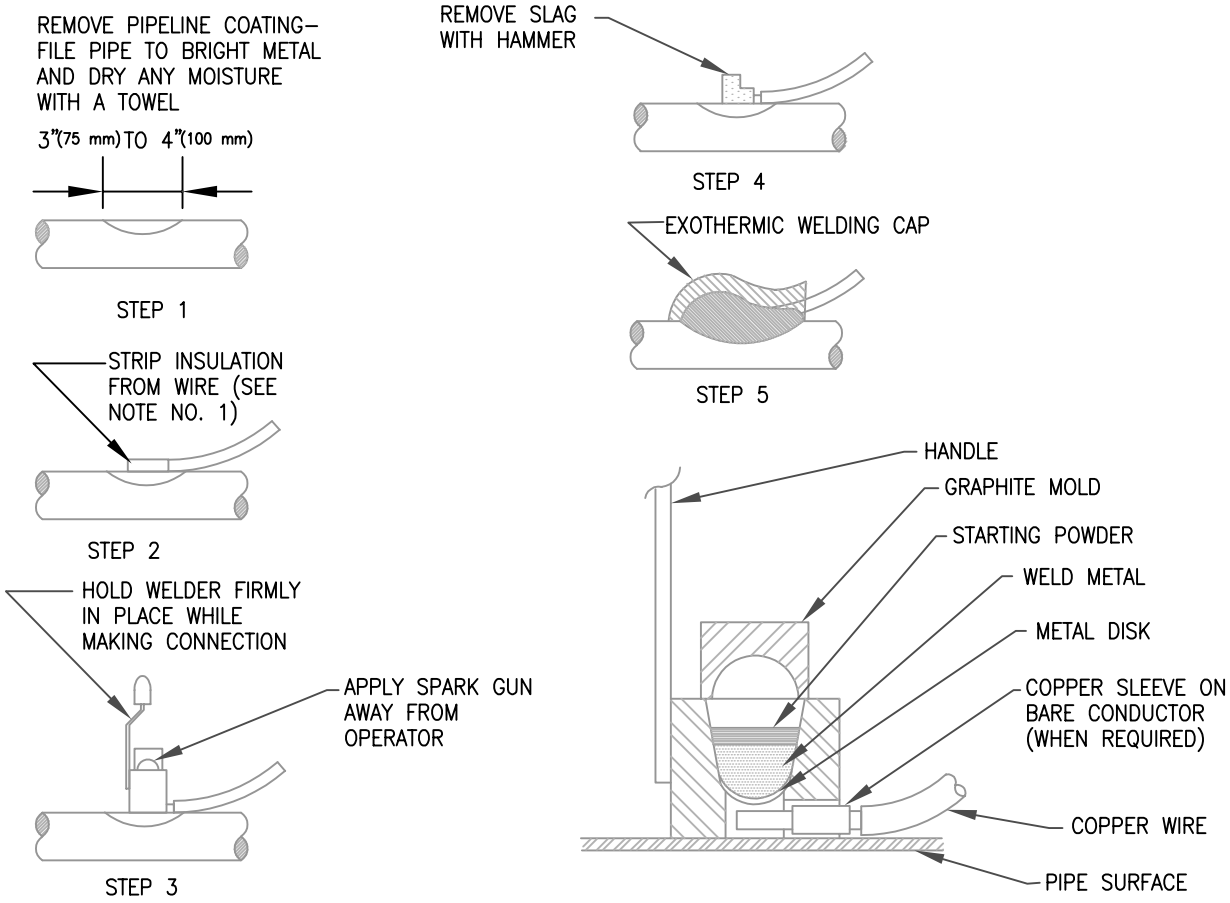

GENERAL WELDING PROCEDURE
TYPE HA

1. When using #10(6 mm²) to #14(2.5 mm²) AWG solid wire, it will be necessary to install a copper sleeve of adequate size over the bare end of the wire and crimp in place before attempting to make the connection. The wire should protrude at least 1/8" (3 mm) from the end of the sleeve.

2. Insert the conductor into mold noting any special information under "positioning" for application type in the manufacturers instructions packaged with the welder.

3. Insert steel disk in bottom of cavity inside mold. Dump the weld metal into mold being careful not to upset the steel disk. Tap the bottom of the tube to loosen all the starting powder and spread it evenly over the weld metal. Place a small amount of starting powder on the top edge of mold under cover opening for easy ignition.

4. Close cover and ignite with the flint gun. Move flint gun away quickly to prevent fouling of the flint gun.

5. After ignition, hold the welder in place for a moment to allow the weld to solidify. After the weld has cooled, remove the slag and test connection by tapping with a chipping hammer.

6. Coat the connection, exposed copper wire, and the entire prepared surface. Cover with an exothermic welding cap.

7. Remove all slag from the welder before making weld. Clean the cover and mold after every weld.

8. Wet or damp molds will produce porous welds. Molds must be dried out before attempting to weld.

9. Connections are to be placed a minimum of 3"(75 mm) apart. Unsuccessful welds are to be abandoned and moved to another prepared surface not less than 3"(75 mm) away.

ISSUED:		STANDARD DETAIL		DETAIL NO.
6/97	TUCSON WATER	WSM EXOTHERMIC WELDING	TUCSON WATER	W-703
REVISED:				
10/02				SHEET 1 OF 2

EXOTHERMIC WELDING MATERIALS

0. DUCTILE IRON PIPE–HORIZONTAL

ERICO–CADWELD

WELDER	WELDMETAL	CONDUCTOR	SLEEVE	PIPEø
CAHBA–1L–16	CA45XF–19	#10 (6 mm²)	B133–1L	16" (400 mm)
CAHBA–1H–16	CA25XF–19	#6 (16 mm²)	–	16" (400 mm)
CAHBA–1V–16	CA45XF–19	#6 (16 mm²)	CAB112	16" (400 mm)
CAHBA–1V–16	CA45XF–19	#2 (35 mm²)	–	16" (400 mm)
CAHBA–1L–16	CA45XF–19	#4 (25 mm²)	–	16" (400 mm)
CAHBA–1L–24	CA45XF–19	#10 (6 mm²)	B133–1L	24" (600 mm)
CAHBA–1H–24	CA25XF–19	#6 (16 mm²)		24" (600 mm)
CAHBA–1V–24	CA45XF–19	#6 (16 mm²)	CAB112	24" (600 mm)
CAHBA–1V–24	CA45XF–19	#2 (35 mm²)	–	24" (600 mm)
CAHBA–1L–24	CA45XF–19	#4 (25 mm²)	–	24" (600 mm)
CAHBA–1L	CA45XF–19	#10 (6 mm²)	B133–1L	OVER 24" (600 mm)
CAHBA–1H	CA25XF–19	#6 (16 mm²)	–	OVER 24" (600 mm)
CAHBA–1V	CA45XF–19	#6 (16 mm²)	–	OVER 24" (600 mm)
CAHBA–1V	CA45XF–19	#2 (35 mm²)	–	OVER 24" (600 mm)
CAHBA–1L	CA45XF–19	#4 (25 mm²)	–	OVER 24" (600 mm)

CONTINENTAL–THERMOWELD

FOR PIPE SMALLER THAN 24"(610 mm)ø, SIZE DESIGNATION IS ON WELDER. (I.E. 16" = M–157–16)

WELDER	WELDMETAL	CONDUCTOR	SLEEVE	PIPEø
M–157	25 PCI	#10 (6 mm²)	A–208	16"(400 mm) AND OVER
M–157	25 PCI	#6 (16 mm²)	–	16"(400 mm) AND OVER
M–159	45 PCI	#4 (25 mm²)	–	16"(400 mm) AND OVER
M–161	45 PCI	#2 (35 mm²)	–	16"(400 mm) AND OVER

2. CCP/PCCP–HORIZONTAL

ERICO–CADWELD

WELDER	WELDMETAL	CONDUCTOR	SLEEVE	PIPEø
CAHAA–1L	CA15	#10 (6 mm²)	B133–1L	6"(150 mm) AND OVER
CAHAA–1H	CA15	#6 (16 mm²)	–	4"(100 mm) AND OVER
CAHAA–1V	CA32	#6 (16 mm²)	CAB112	4"(100 mm) AND OVER
CAHAA–1V	CA32	#2 (35 mm²)	–	4"(100 mm) AND OVER
CAHAA–1L	CA15	#4 (25 mm²)	–	6"(150 mm) AND OVER

CONTINENTAL–THERMOWELD

WELDER	WELDMETAL	CONDUCTOR	SLEEVE	PIPEø
M–102	15	#10 (6 mm²)	A–208	4"(100 mm) AND OVER
M–102	15	#6 (16 mm²)	–	4"(100 mm) AND OVER
M–106	15	#4 (25 mm²)	–	6"(150 mm) AND OVER
M–112	32	#2 (35 mm²)	–	4"(100 mm) AND OVER

NOTE:

FOR ANY SIZES OF PIPE NOT LISTED, CONTACT THE TUCSON WATER CORROSION UNIT (520) 791–2648 FOR APPROVED MATERIALS SPECIFICATIONS.

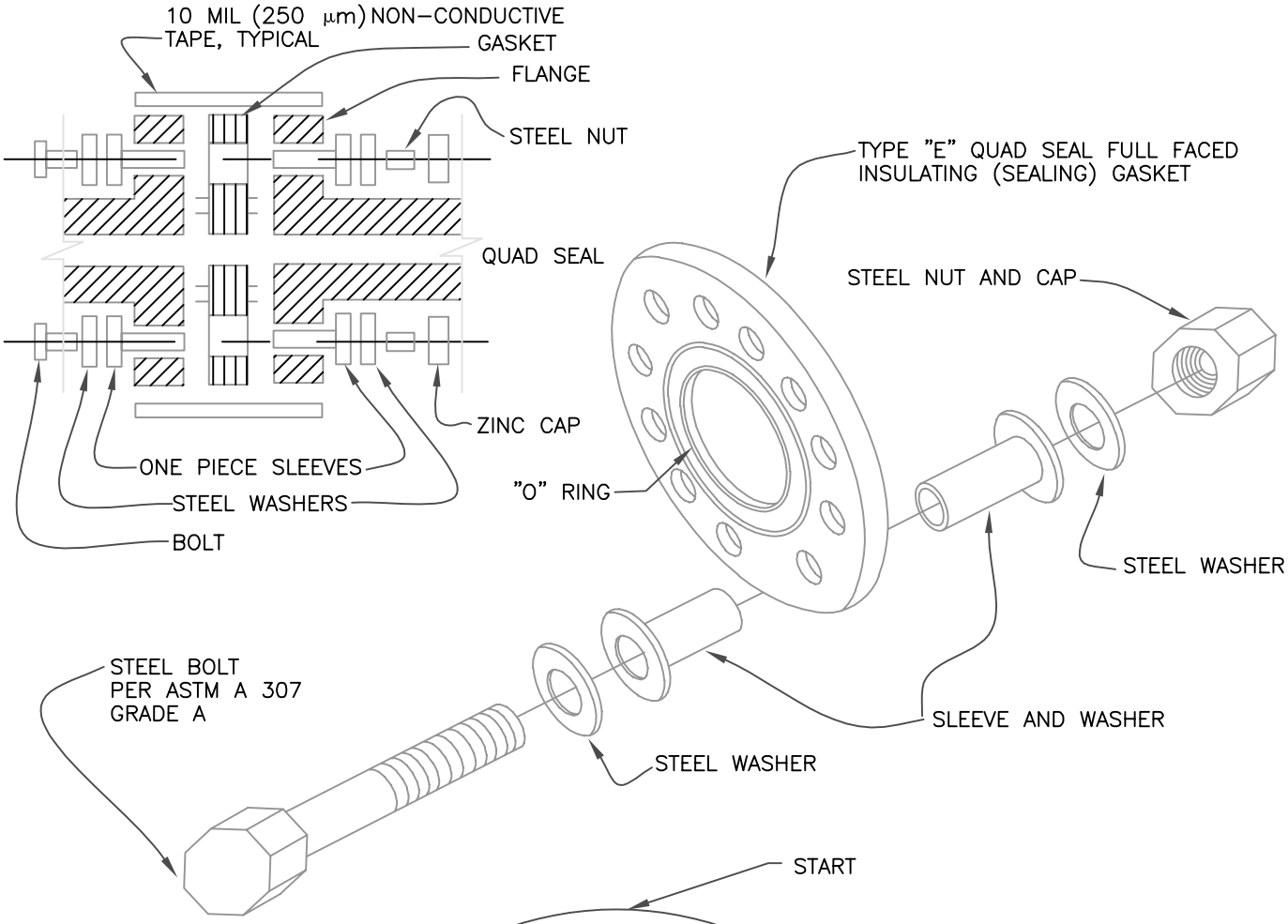

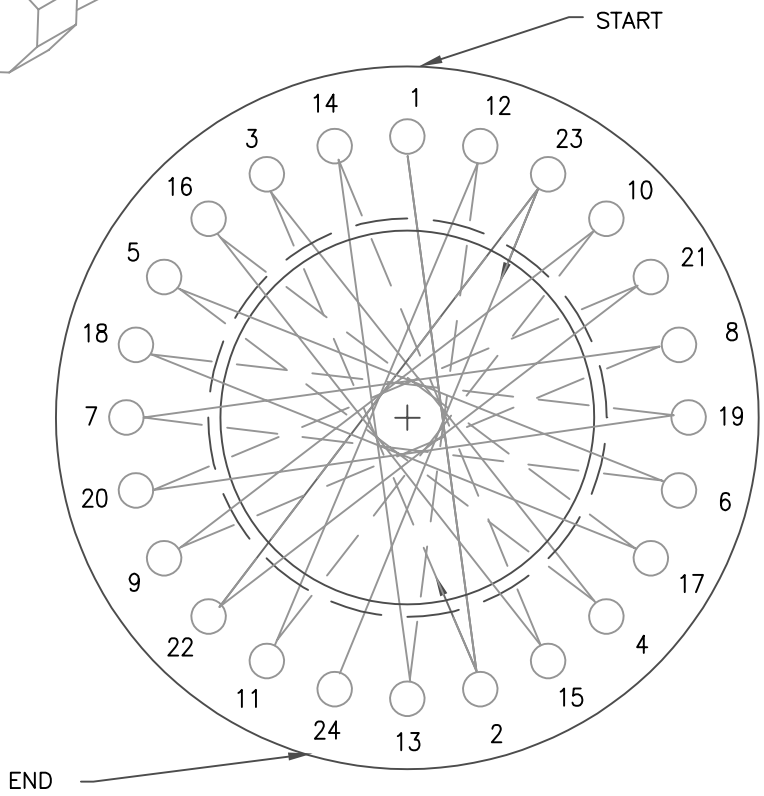

FLANGE BOLT TIGHTENING SEQUENCE

ISSUED:		STANDARD DETAIL		DETAIL NO.
6/97	TUCSON WATER	WSM FLANGE INSULATING KIT	THE SEAL of PIMA COUNTY ARIZONA	W-704
REVISED:				
10/02				SHEET 1 OF 3

NOTES:

1. Cathodic protection materials are to be left in manufacturers boxes, packages, etc. until approved by the Engineer.

2. The seamless (one piece) phenolic neoprene faced/coated type "E" flange insulating gasket shall have a dielectric strength greater than or equal to 400 volts per mil. (18 volts per/μm)

3. Plain phenolic gaskets w/out O rings shall be sandwiched between two 1/8"(3 mm) standard service gaskets.

4. If required, bolt holes shall be reamed after fitting flanges together, but prior to inserting mylar insulating sleeves.

5. Bolts shall comply with ASTM A 307 Grade A.

6. The bolt torque requirement shall be in accordance with the manufacturer's recommendation.

7. To provide even sealing on a flange gasket the contractor shall hand tighten the bolts in the sequence shown on Std. Det. W–704, Sheet 1 until the flange faces are in contact with the gasket. After the flange faces are in contact with the gasket, the shall be firmly tightened in the same sequence, to 30%, and then again to 60% and again to 100% of the final torque value.

8. The contractor shall check all bolts after operating temperature has been reached, preferably at zero line pressure and ambient temperature and re–tighten if loose. The system shall not be allowed to return to operating temperature after the initial cycling at ambient temperature without checking and re–tightening bolts as necessary.

9. Although, Std. Det W–704 Sheet 1 shows 24 bolt holes, the same basic procedure shall be used with flanges having more or less bolt holes.

10. The insulated flange shall be wrapped with a 10 mil (250 μm) 2"(50 mm) or 4"(100 mm) non–conductive tape. See Std. Det. W–704, Sheet 3.

11. Upon completion and twenty–four hours prior to burial. The Tucson Water NACE technician shall verify both the effectiveness of the flange insulating kit and the proper installation of zinc caps. Verification and/or test results shall be included in the final corrosion test report. The Engineer shall call the water utility NACE Technician to coordinate testing.

12. During backfilling, the contractor shall use caution to prevent displacement of all stranded copper conductors and bonding conductors.

FLANGE INSULATING KITS

	APS		CALPICO		CENTRAL		PIKOTEK	PSI	
ANSI:									
150psi	3"–96"	3"–36"	3"–96"	3"–36"	3"–96"	3"–36"	3"–72"	3"–96"	3"–36"
(1.03 MPa)	(75–2400 mm)	(75–900 mm)	(75–2400 mm)	(75–900 mm)	(75–2400 mm)	(75–900 mm)	(75–1800 mm)	(75–2400 mm)	(75–900 mm)
300psi	3"–96"	3"–24"	3"–96"	3"–24"	3"–96"	3"–24"	3"–72"	3"–96"	3"–24"
(2.07 MPa)	(75–2400 mm)	(75–600 mm)	(75–2400 mm)	(75–2400 mm)	(75–2400 mm)	(75–600 mm)	(75–1800 mm)	(75–2400 mm)	(75–600 mm)
GASKET:									
FACE	Full	Full	Full	Full	Full	Full	Full	Full	Full
TYPE	E	E	E	E	E	E	E	E	E
STYLE	Trojan	Trojan	"O" Ring	"O" Ring	Jock	Jock	PGE	LB	LB
RETAINER	Phenolic	Phenolic	Phenolic	Phenolic	Phenolic	Phenolic	G–10	G–10	G–10
SEAL	Nitrile	Nitrile	Nitrile	Nitrile	Nitrile	Nitrile	Nitrile	Nitrile	Nitrile
INSULATING WASHER:	2–DW	2–Integral	2–DW	2–Integral	2–DW	2–Integral	2–DW	2–DW	2–Integral
ONE PIECE	No	Yes	No	Yes	No	Yes	No	No	Yes
MATERIAL	Phenolic	Minlon	Non Asb	Minlon	Phenolic	Minlon	G–10	G–10	Minlon
SLEEVE	1 sleeve	2–Integral	1 sleeve	2–Integral	1 sleeve	2–Integral	1 sleeve	1 sleeve	2–integral
MATERIAL	Phenolic	Minlon	Ploy	Minlon	Poly	Minlon	G–10	G–10	Minlon
STEEL WASHERS	2–Zinc	2–Zinc	2–Zinc	2–Zinc	2–Zinc	2–Zinc	2–Zinc	2–Zinc	2–Zinc

APPROVED NON–CONDUCTIVE TAPES ARE AS FOLLOWS:

2" DOTTIE #210 SURFACE MARKED
CALPICO V1–10(VINYL IDENTIFIED)
TEMFLEX(3M)1100(PRINTED)

4" CALPICO V1–20(VINYL IDENTIFIED)
SCOTCHRAP(3M)50 (PRINTED)

2–Zinc implies 2 Electroplated Zinc Coated Steel Washers
Non–Asb implies Non–Asbestos
Poly implies Polyethylene
DW implies Double Washer

ISSUED: 6/97
REVISED: 10/02

TUCSON WATER

STANDARD DETAIL
WSM FLANGE INSULATING KIT

THE SEAL of PIMA COUNTY ARIZONA

DETAIL NO. W-704

SHEET 3 OF3

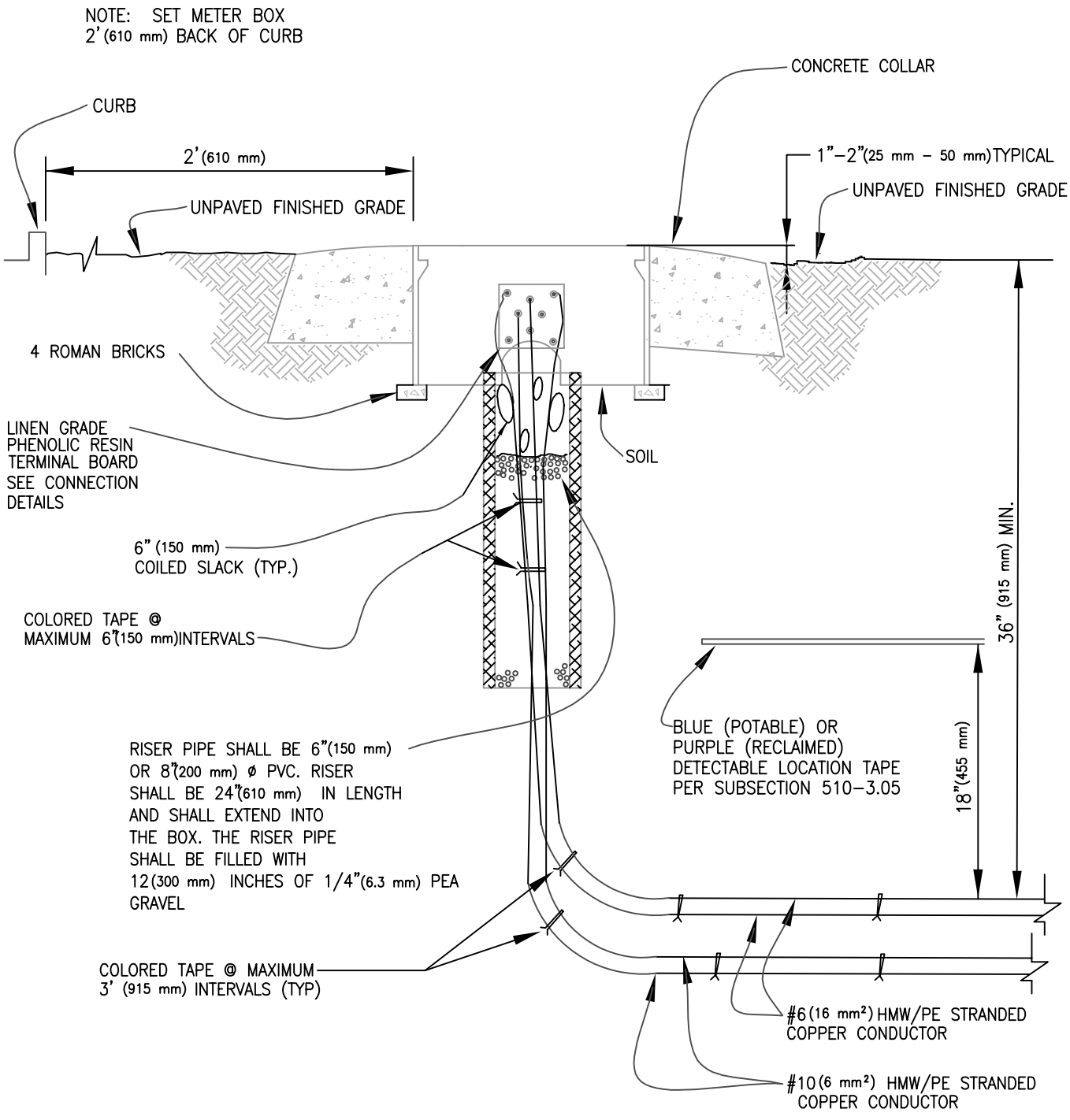

ISSUED:		STANDARD DETAIL		DETAIL NO.
6/97	TUCSON WATER	WSM CORROSION TEST STATION	THE SEAL of PIMA COUNTY ARIZONA	W-705
REVISED:		FLUSH GRADE INSTALLATION		
10/02				SHEET 1 OF 3

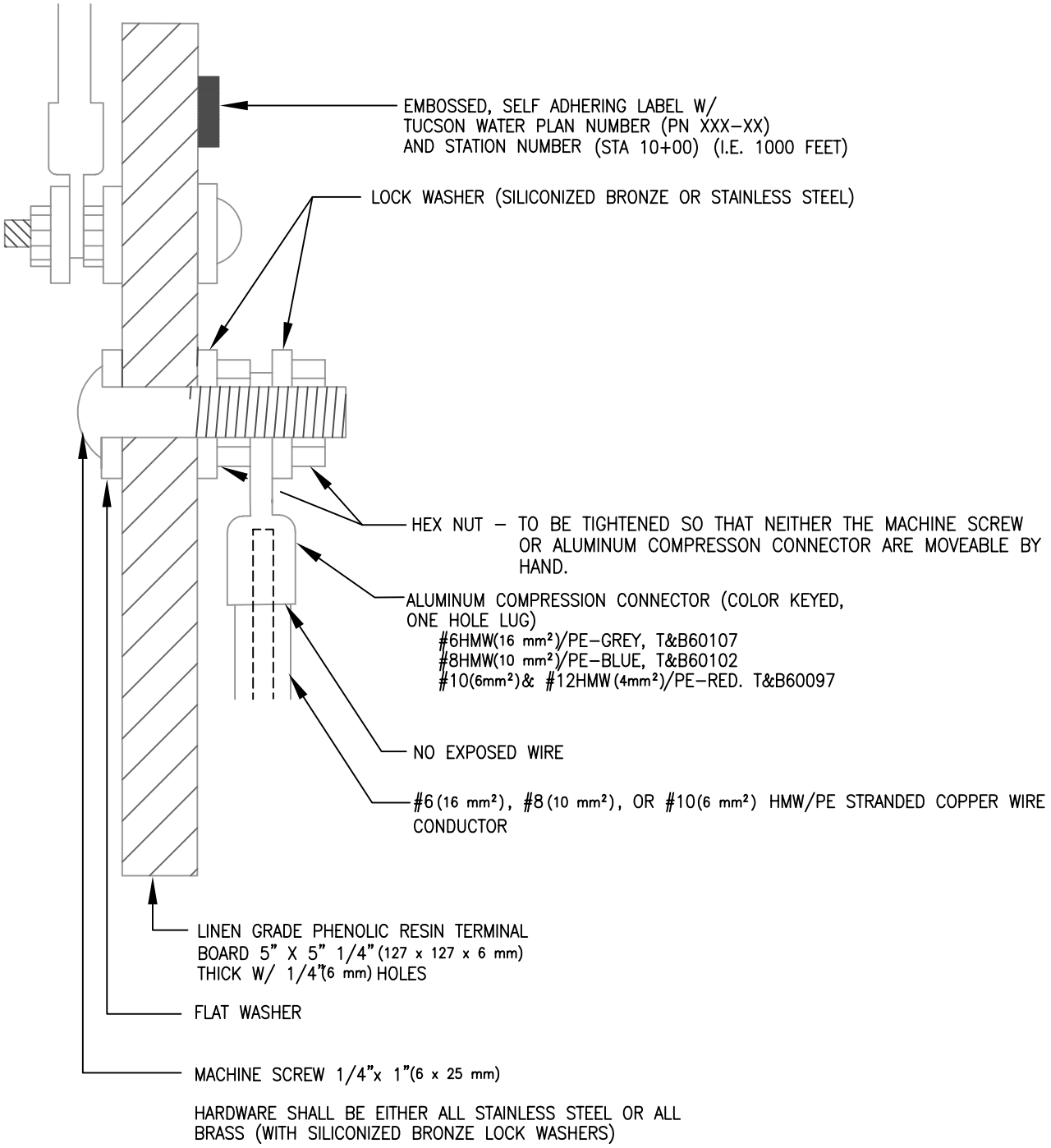

CRIMPING OF RING–TYPE TERMINAL CONNECTOR SHALL BE ACCOMPLISHED WITH A CRIMPING TOOL INTENDED FOR THIS USE. PLIERS OR OTHER SUBSTITUTES ARE NOT ACCEPTABLE. TO INSURE A PROPER, NON–REMOVABLE MECHANICAL FASTENING BETWEEN THE WIRE AND RING–TYPE TERMINAL CONNECTOR(S), THE RECOMMENDED CRIMP TOOL IS THE THOMAS AND BETTS (T+B) #TBM25S OR PRE–APPROVED EQUAL. COMPRESSION CONNECTORS SHALL BE CONNECTED TO BOARD SO AS NOT TO TOUCH OTHER CONNECTORS. LEADS COMING FROM SOURCES OF DIFFERENT POTENTIALS SHALL BE LOCATED ON OPPOSING SIDES OF THE TERMINAL BOARD SO AS TO PREVENT SHORTING OUT.

TERMINAL BOARD CONNECTION

ISSUED:		STANDARD DETAIL		DETAIL NO.
6/97	TUCSON WATER	WSM CORROSION TEST STATION FLUSH GRADE INSTALLATION	THE SEAL of PIMA COUNTY ARIZONA	W-705
REVISED: 10/02				SHEET 2 OF 3

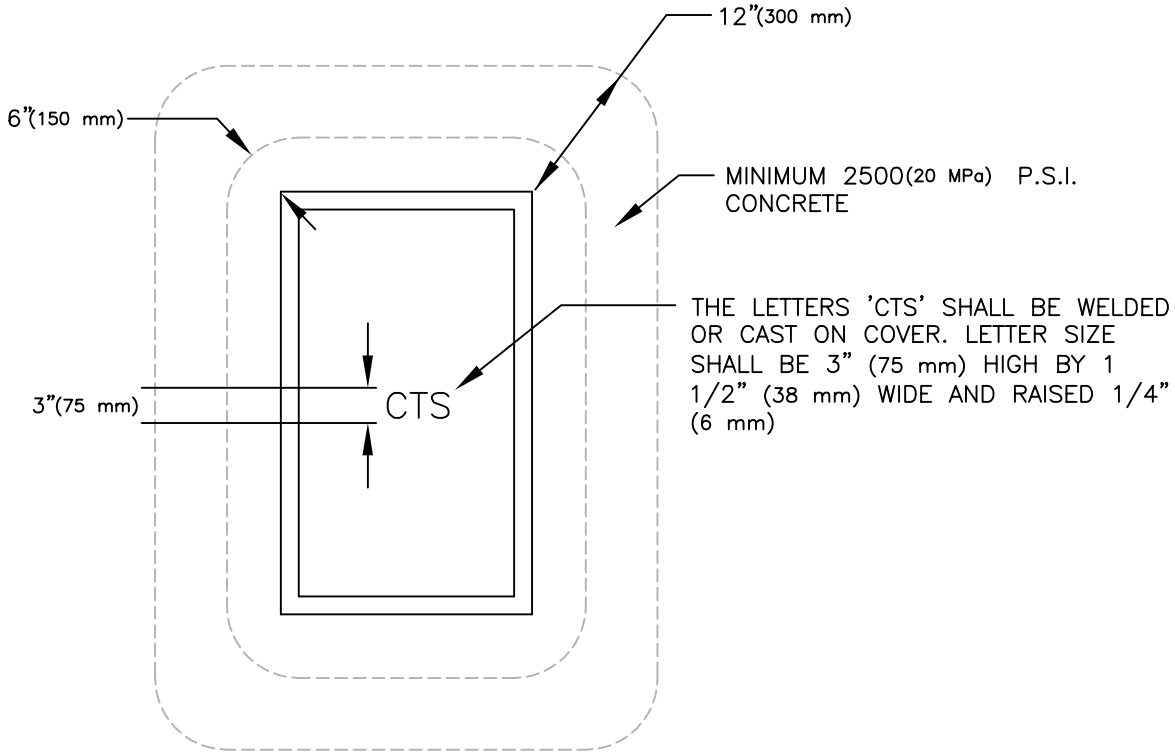

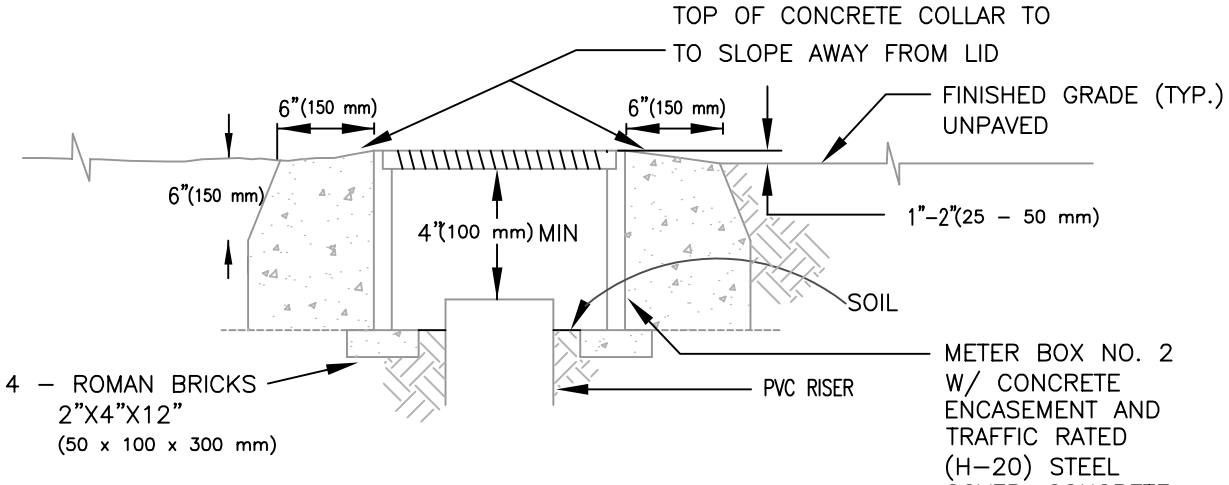

NOTE: TOP OF BOX IS TO BE SET 1"-2"(25 - 50 mm) ABOVE FINISHED GRADE I

CONCRETE COLLAR

ISSUED:		STANDARD DETAIL		DETAIL NO.
6/97	TUCSON WATER	WSM CORROSION TEST STATION	THE SEAL of PIMA COUNTY ARIZONA	W-705
REVISED:		FLUSH GRADE INSTALLATION		
10/02				SHEET 3 OF 3

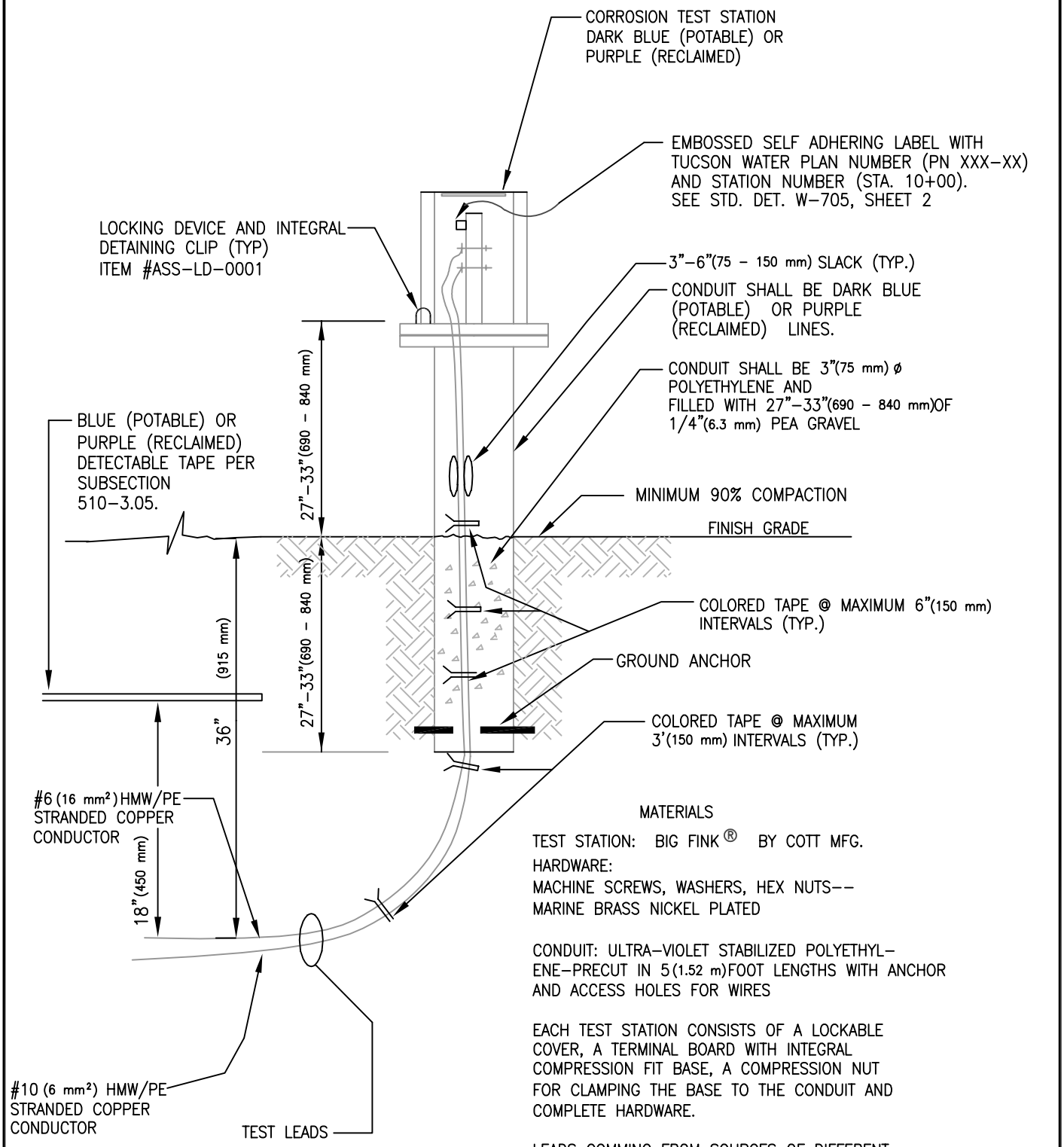

MATERIALS

TEST STATION: BIG FINK® BY COTT MFG.

HARDWARE:
MACHINE SCREWS, WASHERS, HEX NUTS--
MARINE BRASS NICKEL PLATED

CONDUIT: ULTRA–VIOLET STABILIZED POLYETHYL–ENE–PRECUT IN 5(1.52 m)FOOT LENGTHS WITH ANCHOR AND ACCESS HOLES FOR WIRES

EACH TEST STATION CONSISTS OF A LOCKABLE COVER, A TERMINAL BOARD WITH INTEGRAL COMPRESSION FIT BASE, A COMPRESSION NUT FOR CLAMPING THE BASE TO THE CONDUIT AND COMPLETE HARDWARE.

LEADS COMMING FROM SOURCES OF DIFFERENT POTENTIALS SHALL BE LOCATED ON OPPOSING SIDES OF THE TERMINAL BOARD SO AS TO PREVENT SHORTING OUT.

HEX NUTS SHALL BE TIGHTENED SO THAT NEITHER THE MACHINE SCREW OR ALUMINUM COMPRESSION CONNECTOR ARE MOVEABLE BY HAND.

ISSUED:		STANDARD DETAIL		DETAIL NO.
6/97	TUCSON WATER	WSM CORROSION TEST STATION	THE SEAL of PIMA COUNTY ARIZONA	W-706
REVISED:		ABOVE GRADE INSTALLATION		
10/02				SHEET 1 OF 1

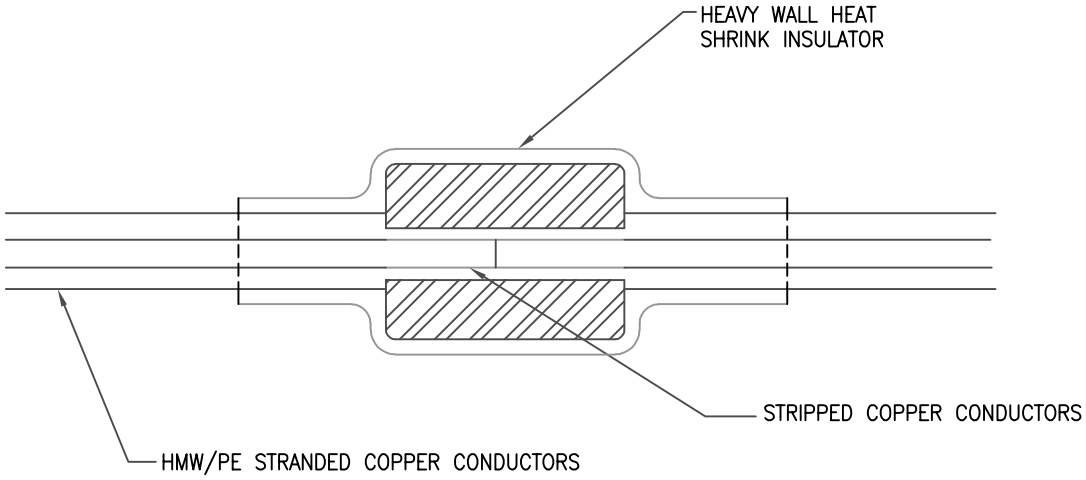

If the existing conductors are of #10 (6 mm^2), #8(10 mm^2) or #6(16 mm^2)size, the contractor shall extend the existing conductors with the new HMW/PE stranded copper of the same gauge. If the existing conductors are not stranded copper of #10 (6 mm^2), #8 (10 mm^2) or #6 (16 mm^2) size, the water utiltiy shall be contacted for instructions.

New HMW/PE stranded copper conductor shall be butt-spliced to existing same size HMW/PE stranded copper conductor using an appropriately sized aluminum compression splice connector and then crimping the connector to insure a proper, non-removable mechanical connector. The new connection shall be sealed with a heavy wall heat shrink insulator.

Note: Do not use on impressed current wires (anodes, negative structure leads).

RECOMMENDED CRIMP TOOL IS THOMAS BETTS (T+B) #TBM25S
(OR PRE-APPROVED EQUAL)

SPLICING MATERIALS

ALUMINUM COMPRESSION SPLICE CONNECTORS

1. APPROVED

SUPPLIER	MODEL#	SIZE
T+B	60500	#10 (6 mm^2)
T+B	60501	#8 (10 mm^2)
T+B	60507	#6 (16 mm^2)

2. APPROVED HEAVY WALL HEAT SHRINK INSULATORS

SUPPLIER	MODEL#	SIZE
T+B	HS12-6	#12-#6 (3.5 mm^2-16 mm^2)
T+B	HS12-6L	#12-#6 (3.5 mm^2-16 mm^2)
T+B	HS12-6-4	#12-#6 (3.5 mm^2-16 mm^2)

ISSUED:		STANDARD DETAIL		DETAIL NO.
6/97	TUCSON WATER	WSM SPLICING DETAIL	THE SEAL of PIMA COUNTY ARIZONA	W-707
REVISED:				
10/02				SHEET 1 OF 3

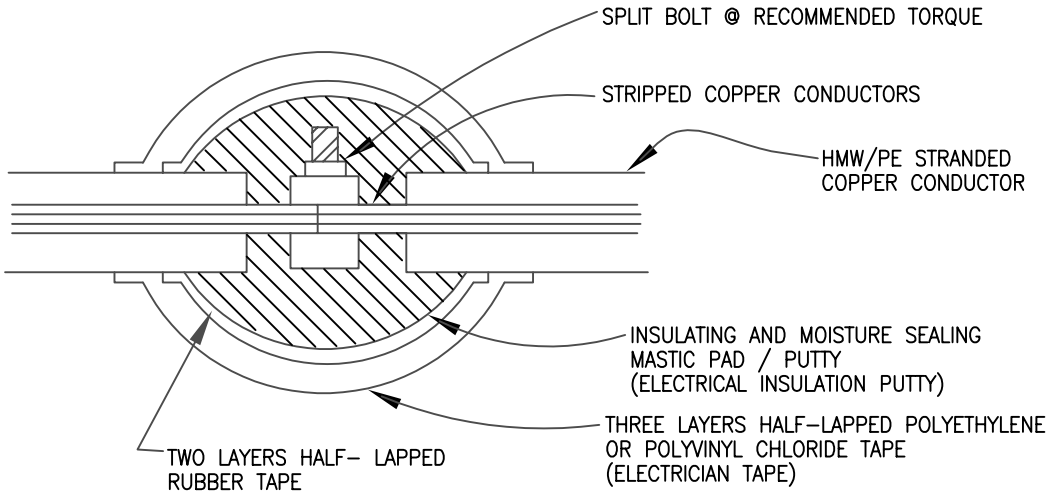

NOTE: FOR NON-IMPRESSED CURRENT LEADS

SPLICING WRAPS FOR SACRIFICIAL ANODES

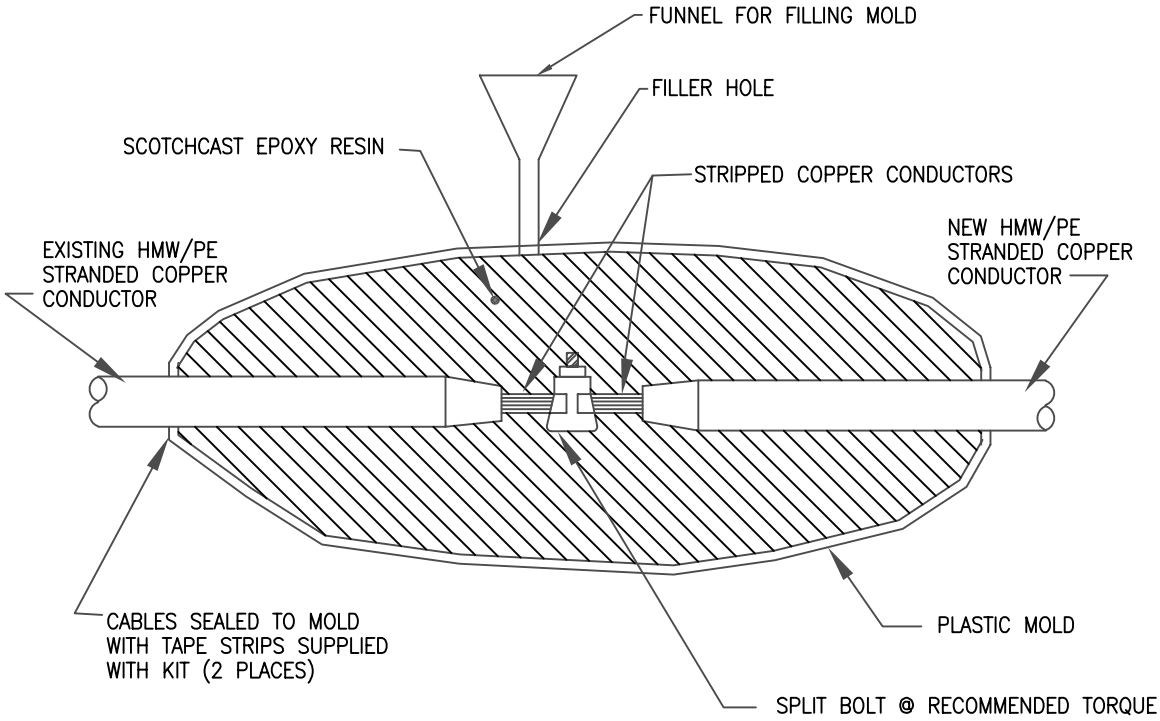

APPROVED: SCOTCHCAST RESIN SPLICING KIT
BURNDY SPLIT BOLTS.

NOTE: USE ON IMPRESSED CURRENT WIRES

EPOXY RESIN CABLE SPLICE DETAIL FOR IMPRESSED CURRENT LEADS

ISSUED:		STANDARD DETAIL		DETAIL NO.
6/97	TUCSON WATER	WSM SPLICING DETAIL	THE SEAL of PIMA COUNTY ARIZONA	W-707
REVISED:				
10/02				SHEET 2 OF 3

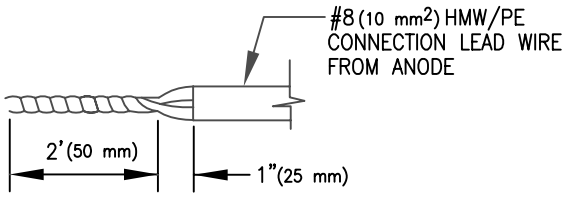

(A) CABLE PREPARATION

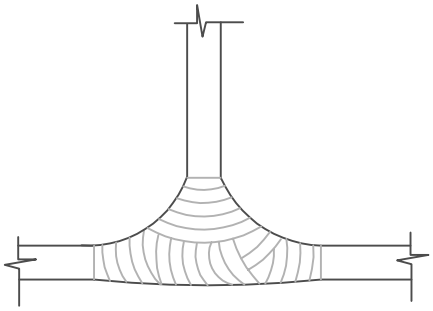

(D) TWO LAYERS HALF-LAPPED POLYETHYLENE OR POLYVINYL CHLORIDE TAPE (ELECTRICIAN TAPE)

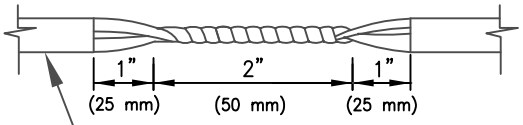

CONNECTION LEAD WIRE
HMW/PE HEADER CABLE

(B)

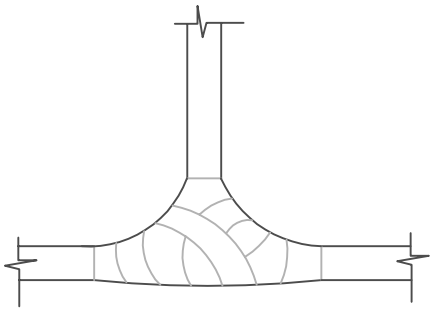

(E) SECTION OF COMPLETED SPLICE

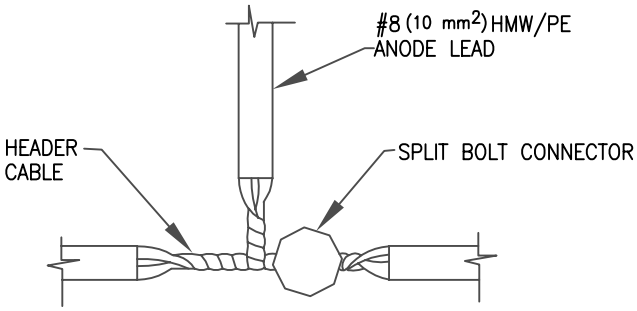

(C) SPLIT BOLT CONNECTOR

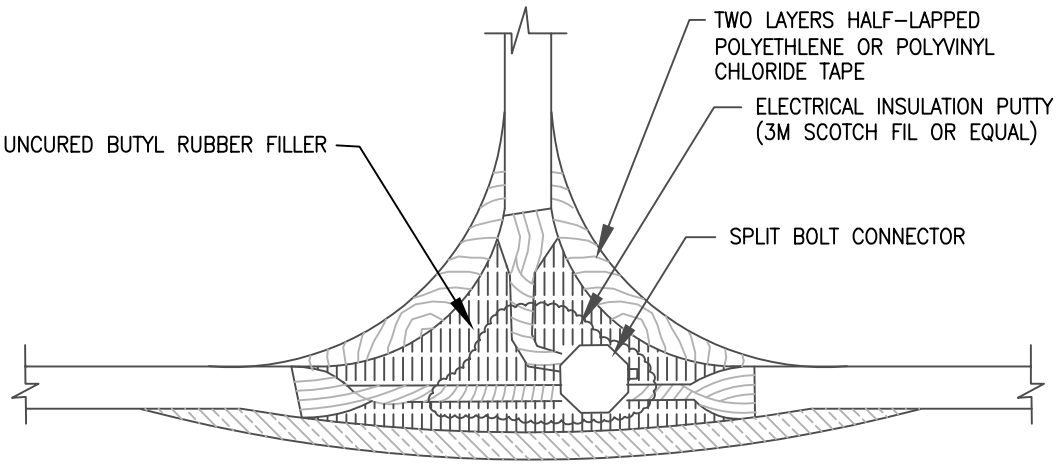

NOTE: DO NOT USE ON IMPRESSED CURRENT WIRES (ANODES & NEGATIVE STRUCTURE LEADS)

SPLIT BOLT CONNECTION

ISSUED:		STANDARD DETAIL		DETAIL NO.
6/97	TUCSON WATER	WSM SPLICING DETAIL	THE SEAL of PIMA COUNTY ARIZONA	W-707
REVISED:				
10/02				SHEET 3 OF 3

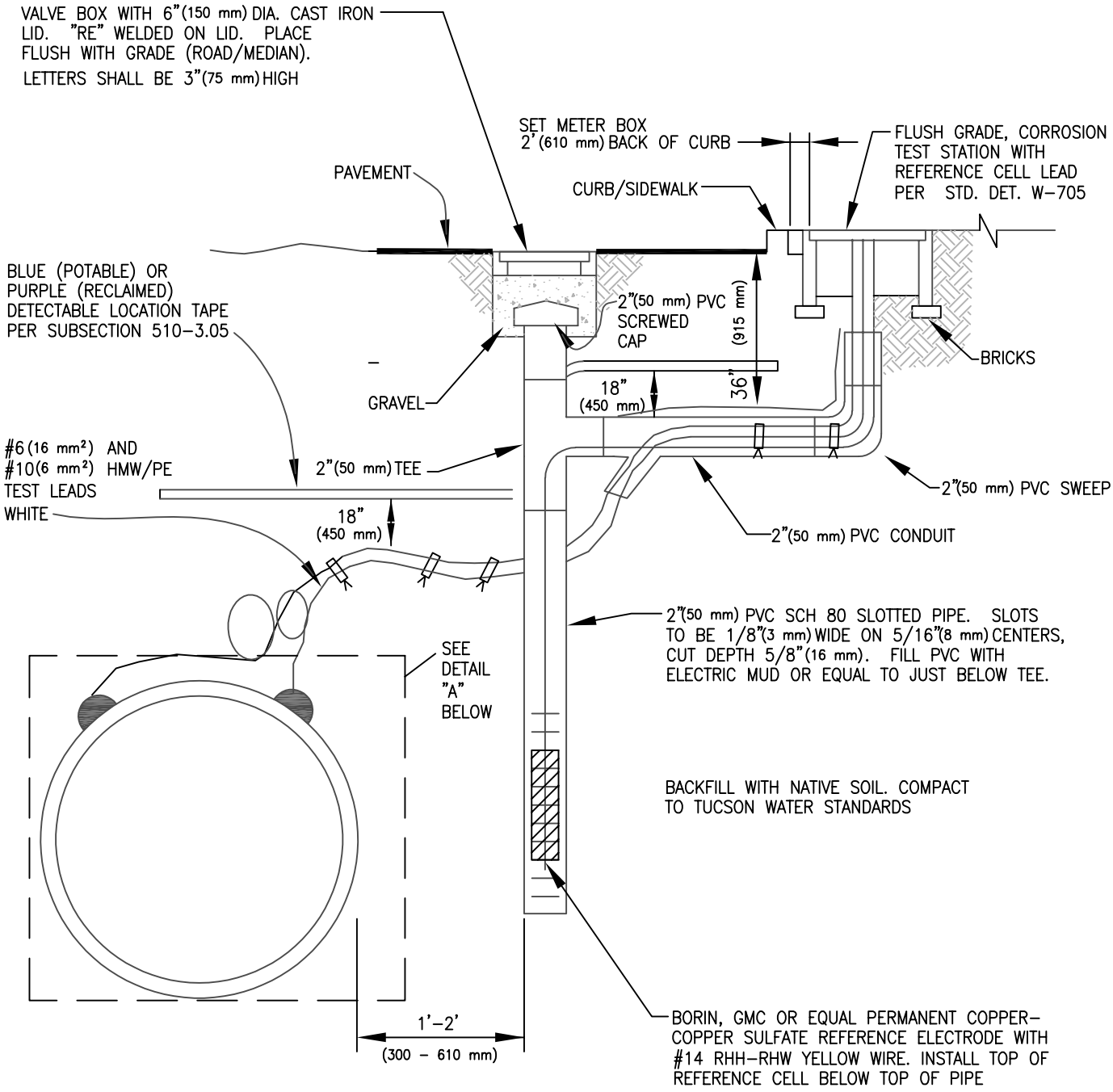

NOTES:
ALL EXCAVATION, TRENCHING, AND BACKFILL PER TUCSON WATER STANDARDS AND SPECIFICATIONS

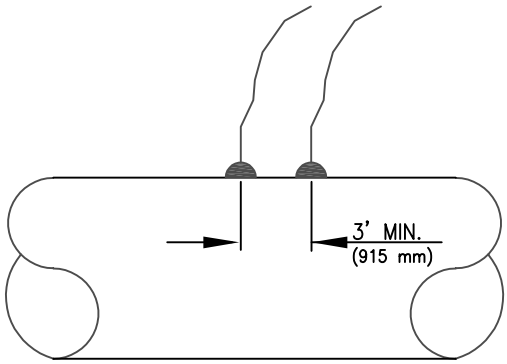

Detail "A"

ISSUED:		STANDARD DETAIL		DETAIL NO.
6/97	TUCSON WATER	WSM PERMANENT REFERENCE ELECTRODE INSTALLATION	THE SEAL of PIMA COUNTY ARIZONA	W-708
REVISED:				
10/02				SHEET 1 OF 1

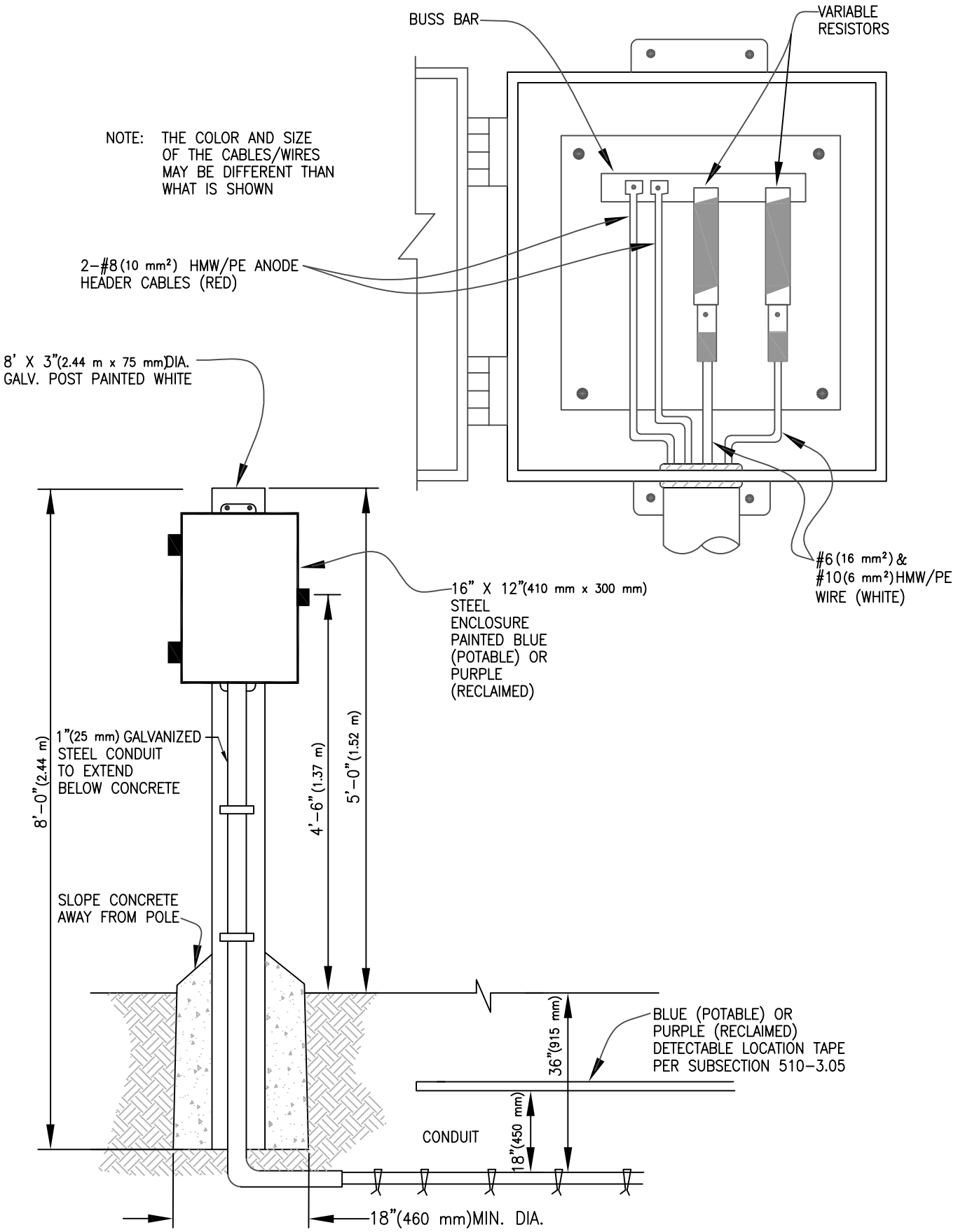

ISSUED:		STANDARD DETAIL		DETAIL NO.
8/00	TUCSON WATER	WSM JUNCTION BOX	THE SEAL of PIMA COUNTY ARIZONA	W-709
REVISED:				
10/02				SHEET 1 OF 1

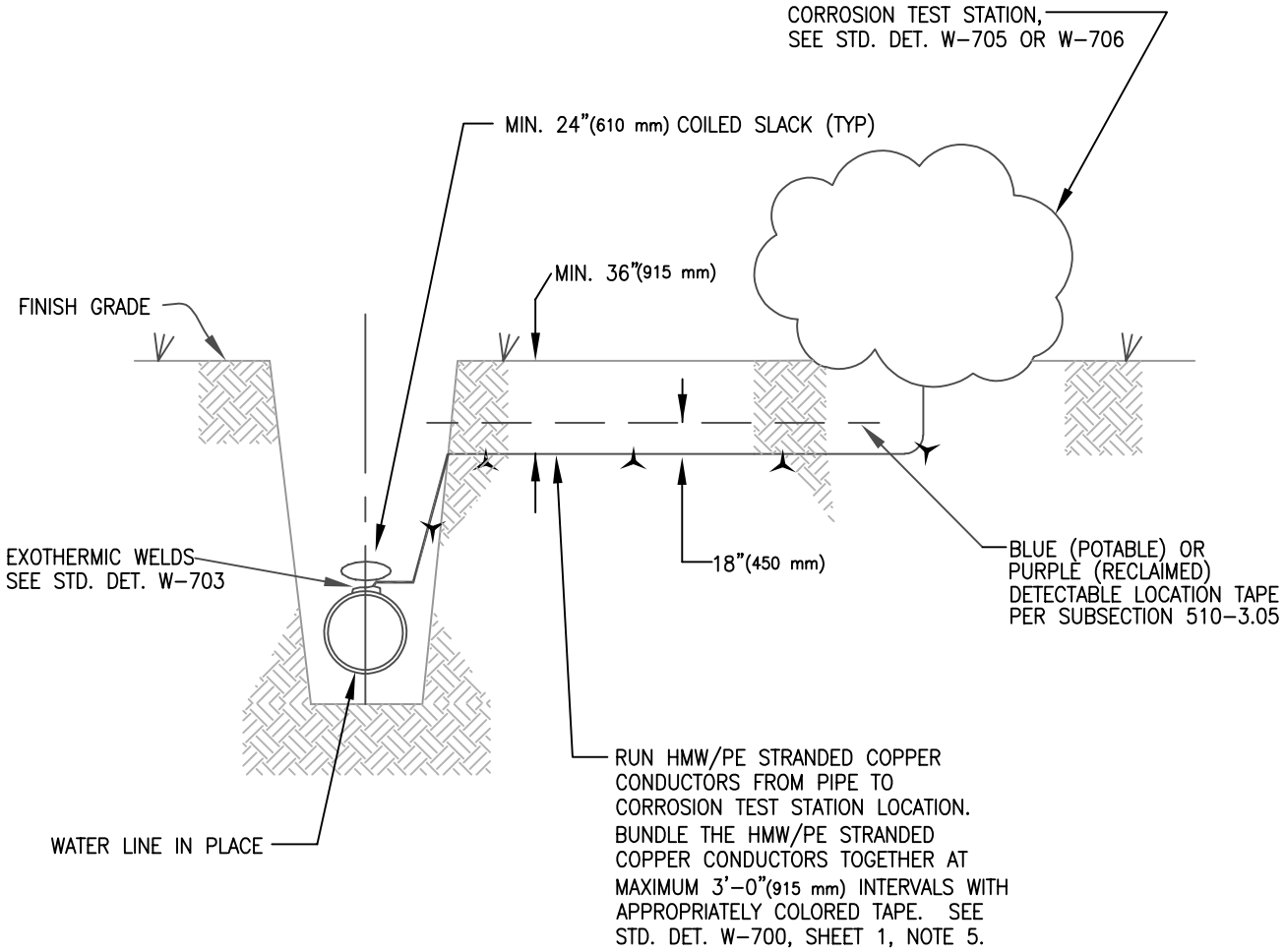

CORROSION TEST STATIONS SHALL BE LOCATED AS STATIONED ON THE PLANS UNLESS OTHERWISE NOTED, OR AS FIELD CONDITIONS DICTATE.

ISSUED:		STANDARD DETAIL		DETAIL NO.
8/00	TUCSON WATER	WSM TYPES OF CORROSION TEST STATIONS	THE SEAL of PIMA COUNTY ARIZONA	W-710
REVISED:				
10/02				SHEET 1 OF 9

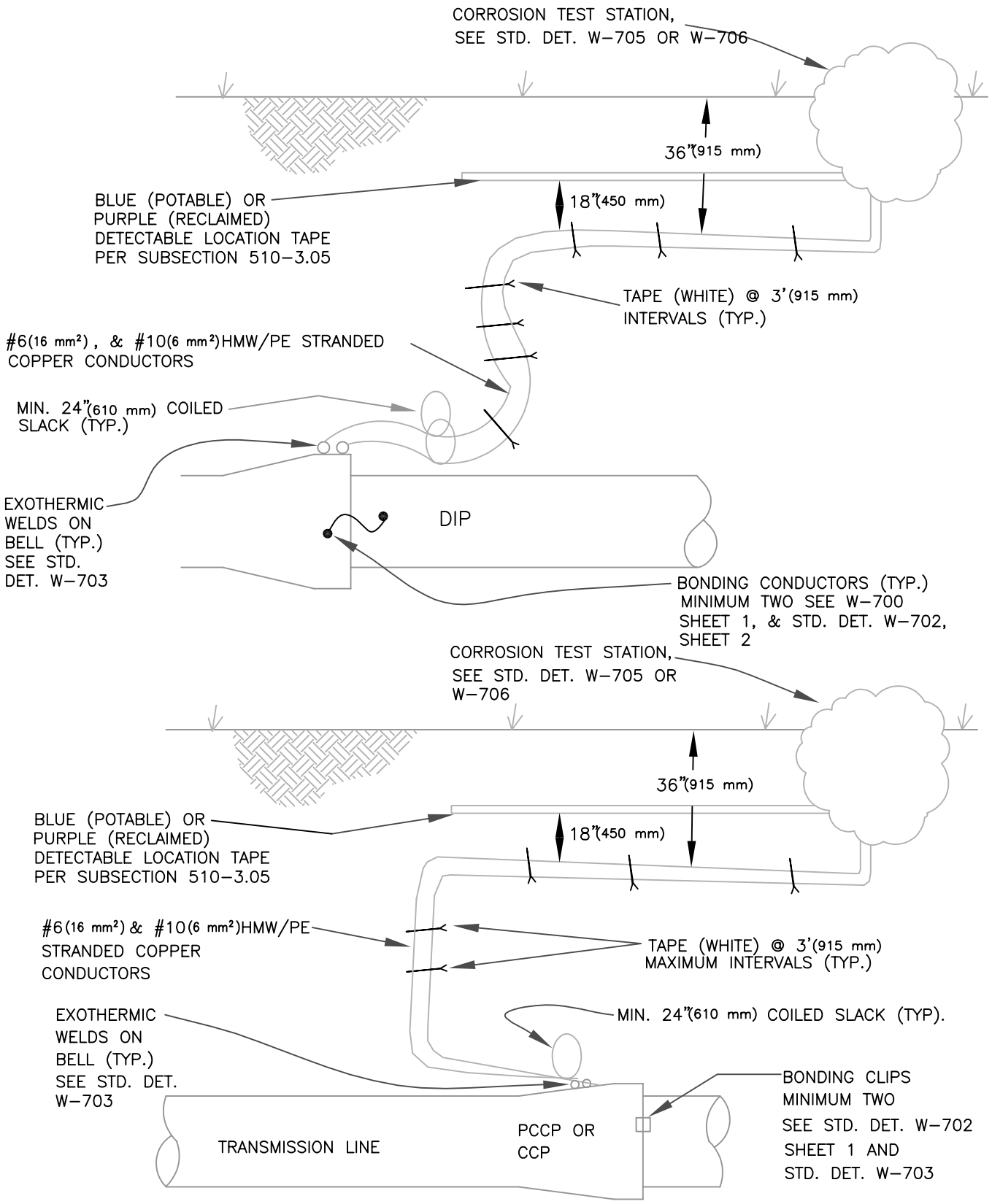

TYPE 1 – STANDARD

ISSUED:		STANDARD DETAIL		DETAIL NO.
8/00	TUCSON WATER	WSM TYPES OF CORROSION TEST STATIONS	THE SEAL of PIMA COUNTY ARIZONA	W-710
REVISED:				
10/02				SHEET 2 OF 9

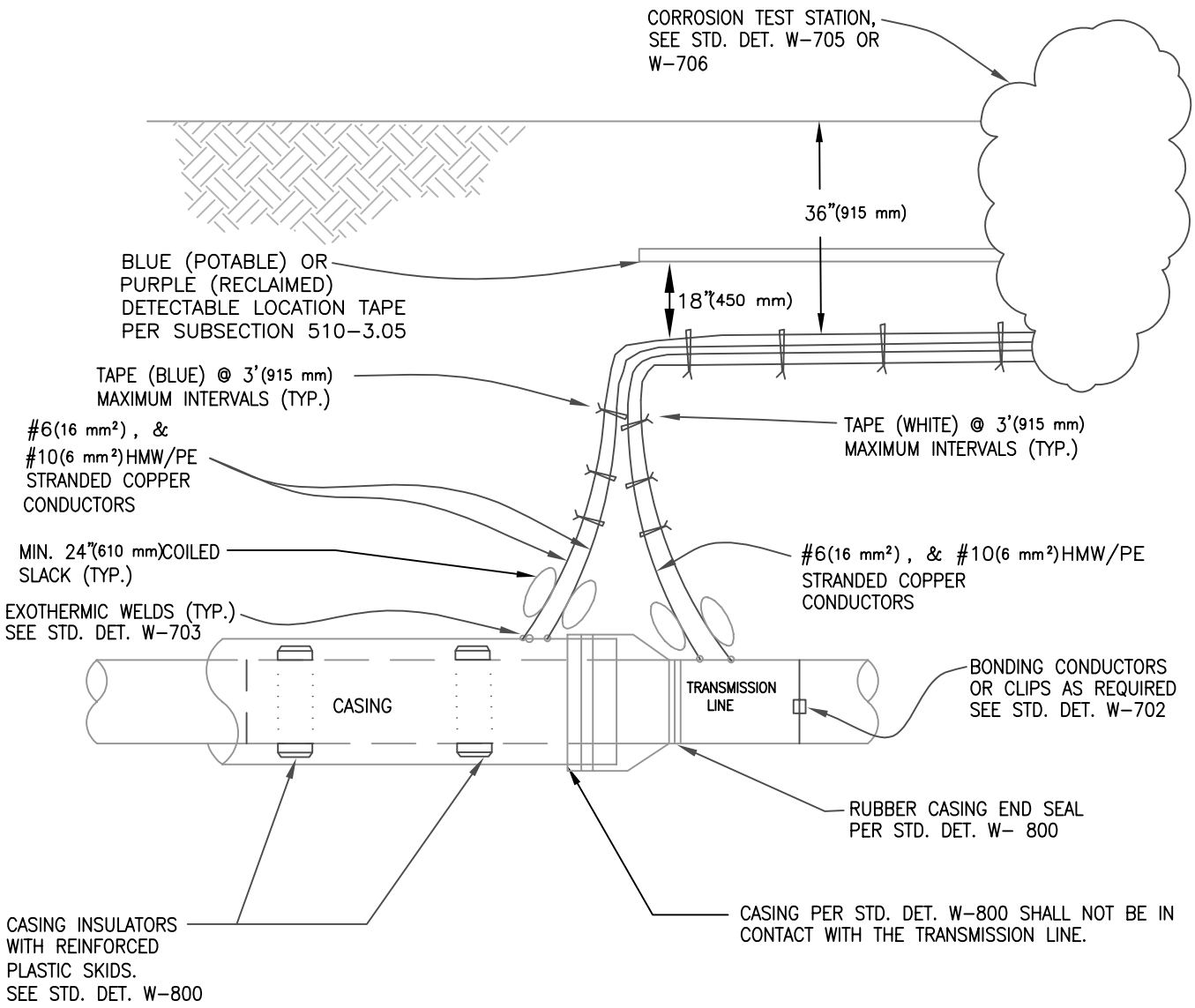

NOTE: UPON COMPLETION AND 24 HOURS PRIOR TO BURIAL, THE NACE TECHNICIAN SHALL VERIFY THE MAIN IS NOT IN CONTACT AND SHORTED TO THE CASING. VERIFICATION AND TEST RESULTS SHALL BE INCLUDED IN THE FINAL CORROSION TEST REPORT. THE ENGINEER SHALL CONTACT THE WATER UTILITY NACE TECHNICIAN TO COORDINATE TESTING.

NOTE
ALL PIPE JOINTS INSIDE THE CASING MUST BE BONDED.

TYPE 2- CASING/PIPE

ISSUED:		STANDARD DETAIL		DETAIL NO.
8/00	TUCSON WATER	WSM TYPES OF CORROSION TEST STATIONS	THE SEAL of PIMA COUNTY ARIZONA	W-710
REVISED:				
10/02				SHEET 3 OF 9

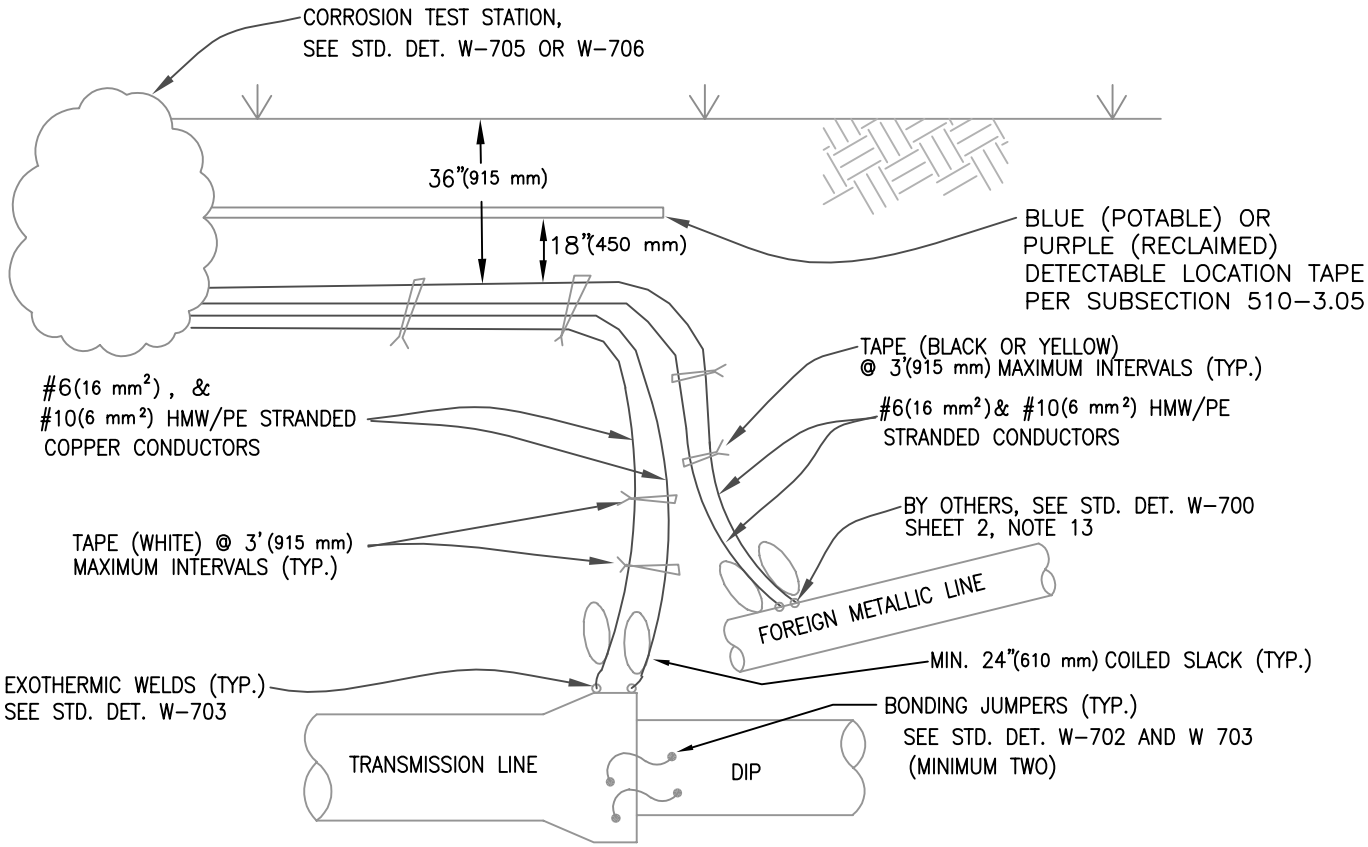

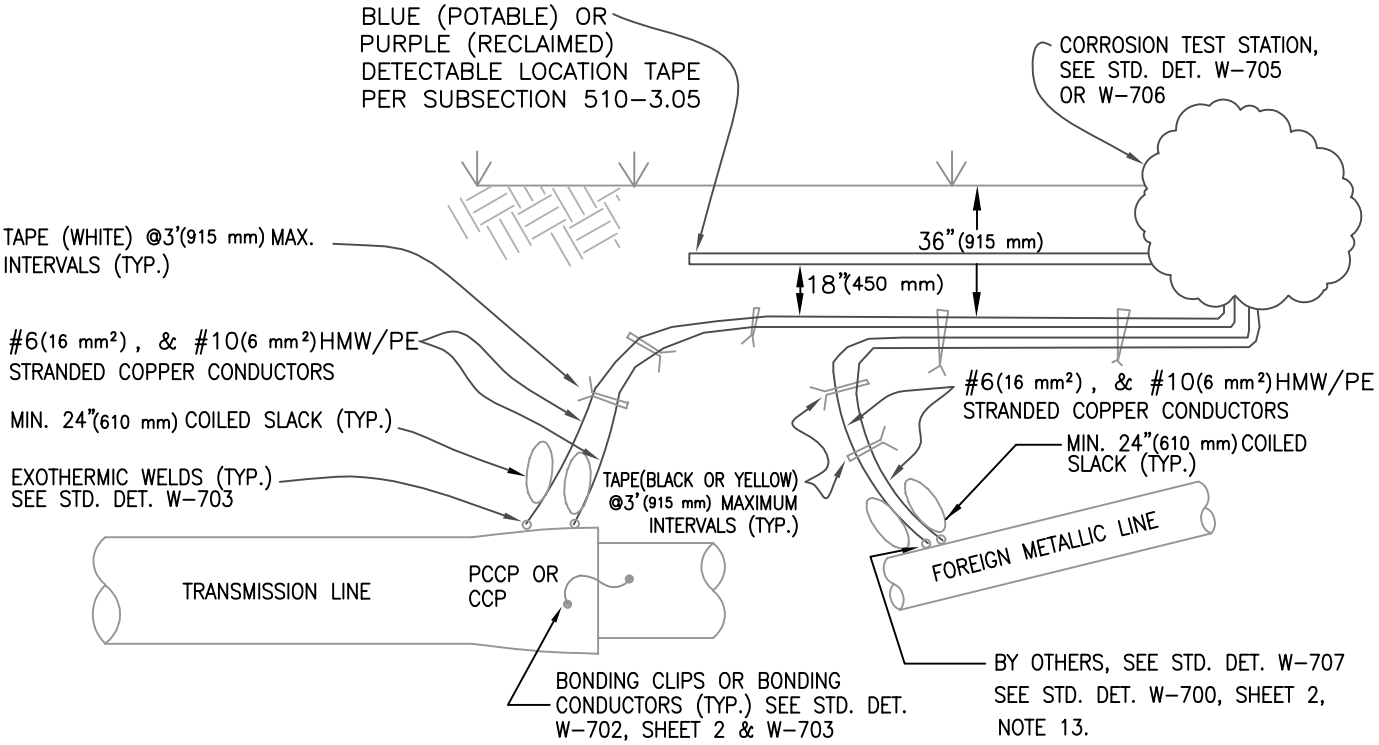

TYPE 3 – MAINLINE/FOREIGN METALLIC LINES

ISSUED:		STANDARD DETAIL		DETAIL NO.
8/00	TUCSON WATER	WSM TYPES OF CORROSION TEST STATIONS	THE SEAL of PIMA COUNTY ARIZONA	W-710
REVISED:				
10/02				SHEET 4 OF 9

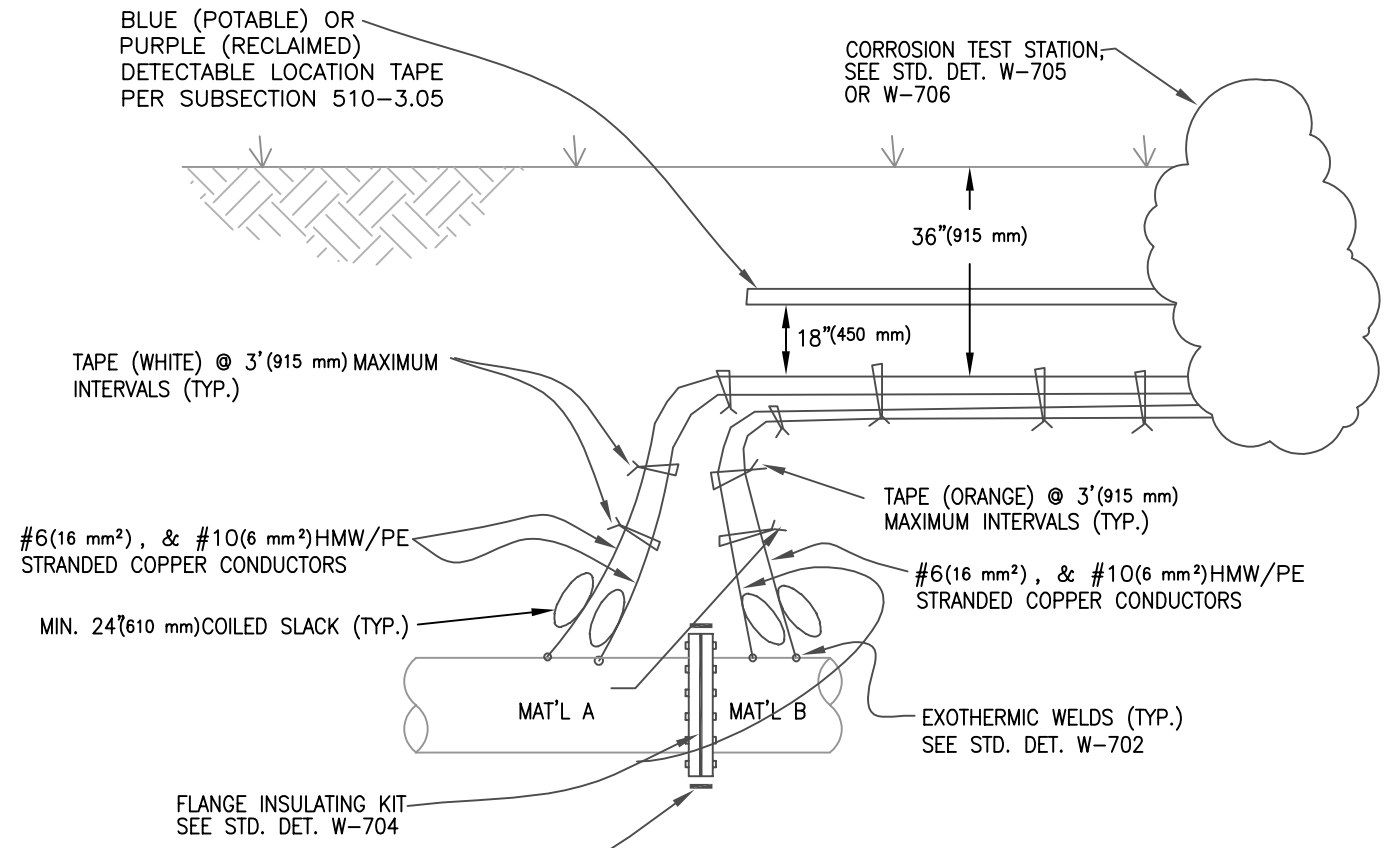

CASE 1

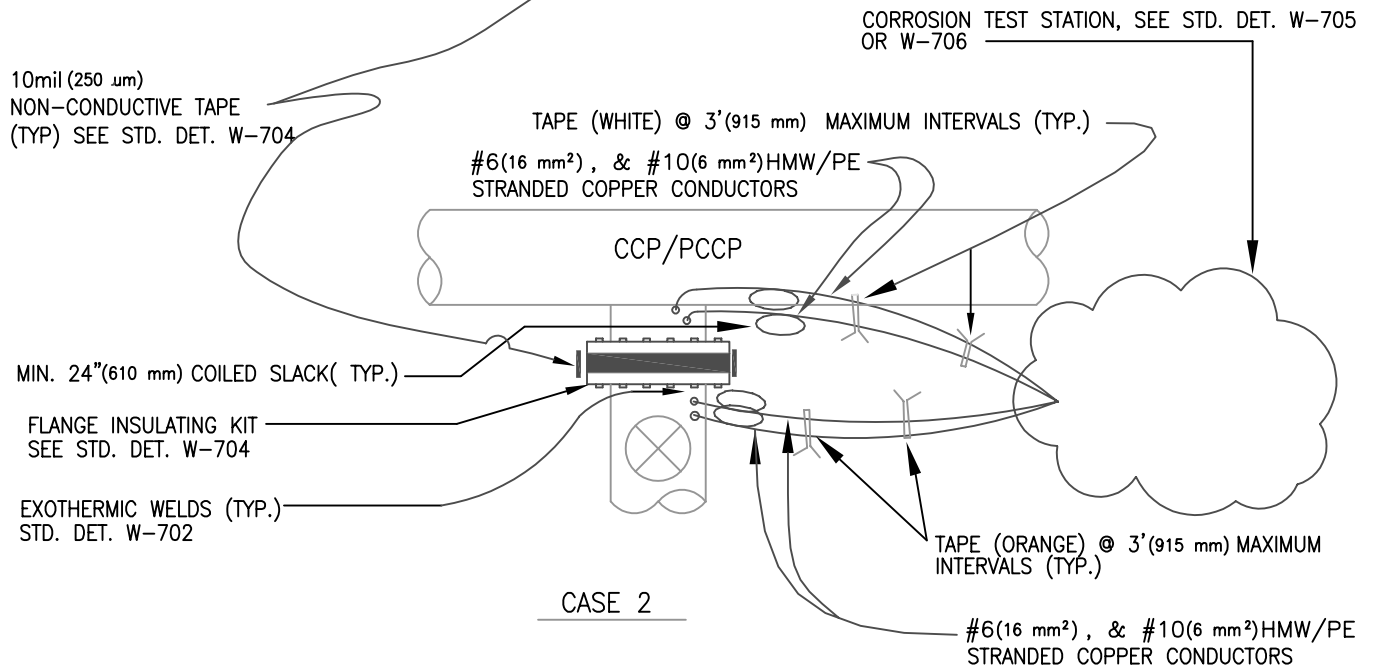

CASE 2

NOTE: UPON COMPLETION AND 24 HOURS PRIOR TO BURIAL, THE NACE TECHNICIAN SHALL VERIFY THE EFFECTIVENESS OF THE FLANGE INSULATING KIT. VERIFICATION AND/OR TEST RESULTS SHALL BE INCLUDED IN THE FINAL CORROSION TEST REPORT. THE ENGINEER SHALL CONTACT THE TUCSON WATER UTILITY NACE TECHNICIAN TO COORDINATE TESTING.

TYPE 4 – DISSIMILAR MATERIALS

ISSUED:		STANDARD DETAIL		DETAIL NO.
8/00	TUCSON WATER	WSM TYPES OF CORROSION TEST STATIONS	THE SEAL of PIMA COUNTY ARIZONA	W-710
REVISED:				
10/02				SHEET 5 OF 9

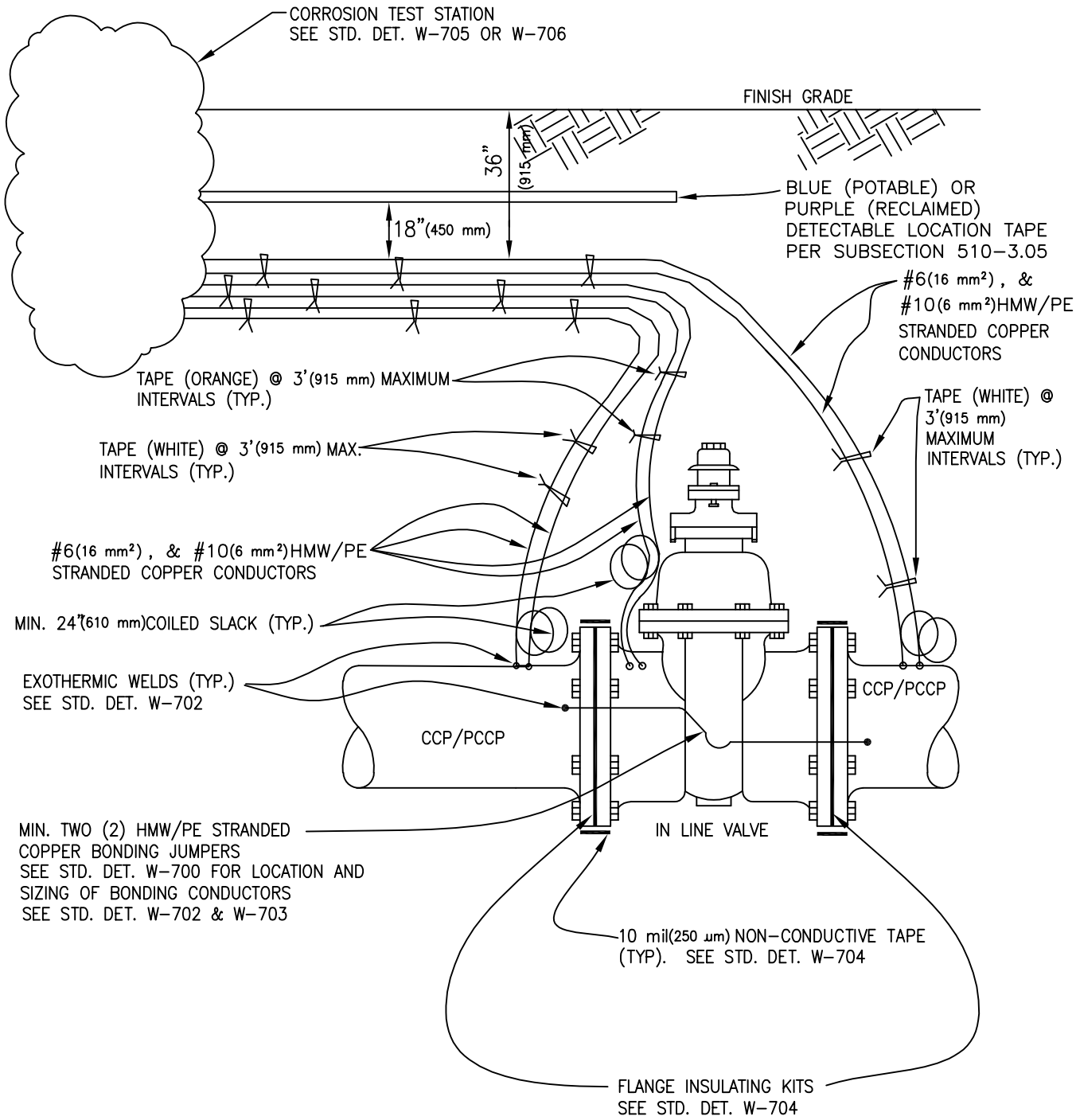

CASE 3

TYPE 4-DISSIMILAR MATERIALS

ISSUED:		STANDARD DETAIL		DETAIL NO.
8/00	TUCSON WATER	WSM TYPES OF CORROSTION TEST STATIONS	THE SEAL of PIMA COUNTY ARIZONA	W-710
REVISED:				
10/02				SHEET 6 OF 9

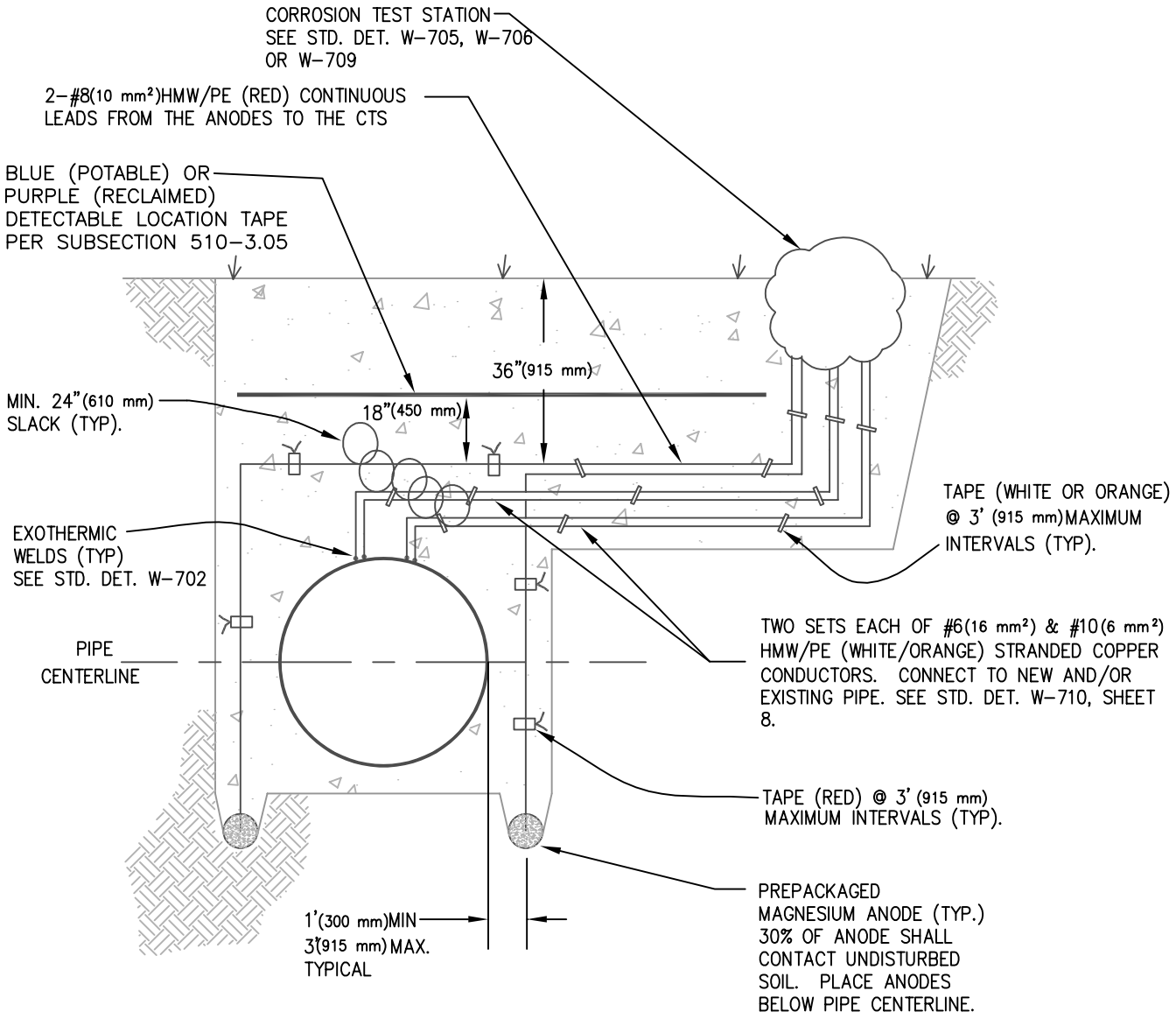

ANODE PLACEMENT (TYPICAL)
SECTION

TYPE 5-SACRIFICIAL ANODES

ISSUED:		STANDARD DETAIL		DETAIL NO.
8/00	TUCSON WATER	WSM TYPES OF CORROSION TEST STATIONS	THE SEAL of PIMA COUNTY ARIZONA	W-710
REVISED:				
10/02				SHEET 7 OF 9

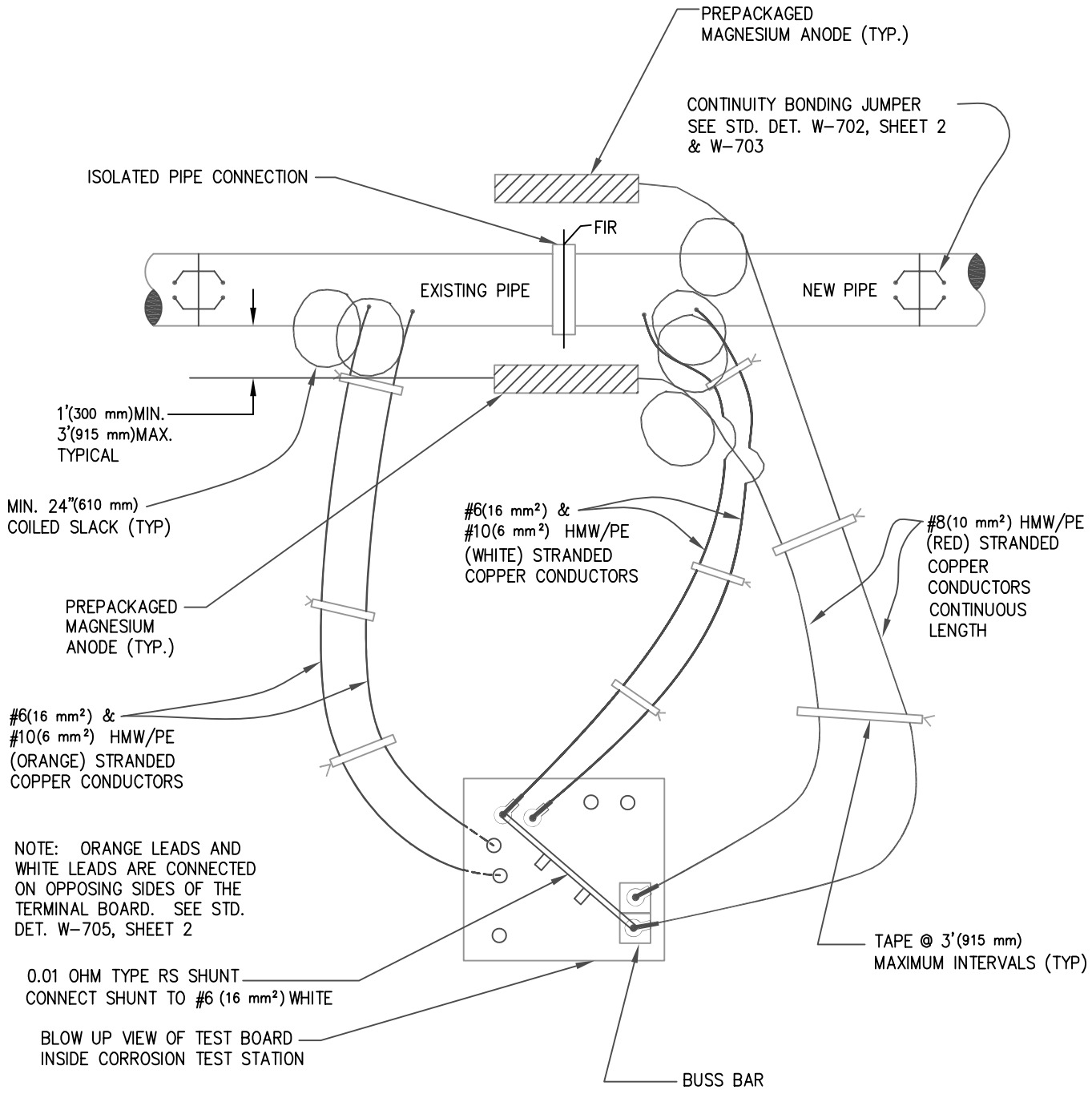

ANODE PLACEMENT (TYP.)

PLAN VIEW

TYPE 5 – SACRIFICIAL ANODES

ISSUED:		STANDARD DETAIL		DETAIL NO.
8/00	TUCSON WATER	WSM TYPES OF CORROSION TEST SYSTEMS	THE SEAL of PIMA COUNTY ARIZONA	W-710
REVISED:				
10/02				SHEET 8 OF 9

SACRIFICIAL MAGNESIUM ANODES SYSTEM

Galvanic anodes shall be magnesium anodes prepackaged in permeable cloth bags.

The bare anode ingot shall be either 17 pounds (8 kg) or 32 pounds (15 kg) as indicated on the plans, or in the special provisions. The normal combined weight of the anode ingot and backfill shall be approximately 51 pounds (23 kg) for the 17 pound (8 kg) bare anode and 70 pounds (32 kg) for the 32 pound (15 kg) bare anode.

The anode ingot shall contain the following alloy combination:

ALUMINUM	5.3% – 6.7%
ZINC	2.5% – 3.5%
MAGANESE	0.15% MIN.
SILICON	0.10% MAX.
COPPER	0.02% MAX.
NICKEL	0.002% MAX.
IRON	0.003% MAX.
IMPURITIES	0.20% MAX.
MAGNESIUM	REMAINDER

Refer to the water utility's list of approved materials or the Special Provisions for anode manufacturers.

The lead wire from the anode shall be a 8 HMW(10 mm^2)/PE wire. The wire shall be long enough so that no splices exist between the anode and the corrosion test station.

Anodes shall be packaged in a permeable cloth bag containing a backfill mixture of the following composition:

GROUND HYDRATED GYPSUM	75%
POWDERED BENTONITE	20%
SODIUM SULFATE	5%

Anodes shall be soaked thoroughly with water just prior to installation.
The backfill shall be saturated immediately after the anodes are installed.

Upon completion and 24 hours prior to burial, the NACE Technician shall verify that the anodes are properly installed. Verification and/or test results shall be included in the final corrosion test report. The Engineer shall contact the water utility NACE Technician to coordinate.

PIPE	ANODES	
SIZE	NO.	WT.
4" (100 mm)	1	17 lbs (8 kg)
6" (150 mm)	1	17 lbs (8 kg)
8" (200 mm)	1	17 lbs (8 kg)
12"(300 mm)	1	32 lbs (15 kg)
12"(300 mm)	2	17 lbs (8 kg)
16"(400 mm)	2	17 lbs (8 kg)
24"(600 mm)	2	17 lbs (8 kg)
30"(750 mm)	2	32 lbs (15 kg)
36"(900 mm)	2	32 lbs (15 kg)
42"(1050 mm)	2	32 lbs (15 kg)

TYPE 5 – SACRIFICIAL ANODES

GENERAL

The contractor shall be responsible for obtaining all permits, traffic control, shoring and bracing of jacking and receiving pits, bedding, backfill, over excavation, compaction or any other work not specifically mentioned herein, considered by the Agency to be associated with the installation of the carrier pipe inside the steel casing. The Contractor shall comply with all requirements specified herein, on the project plans or in the Special Provisions.

CASING

Casing size shall be as specified in the table included in this detail. All casing shall be schedule 40 "standard wall" smooth steel pipe unless otherwise noted. Casing alignment, both horizontal and vertical, shall not deviate more than 0.20 feet (60 mm) from the grade specified on the approved plans.

Casing shall be butt welded around the entire circumference of each joint to provide a water tight seam. Welding shall be accomplished by Certified Welders in accordance with A.S.M.E. section 9.

CARRIER PIPE

Carrier pipe size shall be as specified on the approved plans. Pipe material shall be Pressure Class 350, Restrained Joint Ductile Iron Pipe. The restraint feature shall be Mechanical Joints with "Mega-Lug" brand restrained following glands or U.S. Pipe "TR Flex" restrained joint pipe. Other manufacturers may be permitted with prior approval of the Agency.

CASING INSULATORS

Casing insulators shall be steel. Band width shall be as per manufacturers recommendations depending on pipe size. Steel shall be painted or fusion coated with plastic. Insulators shall be provided with PVC liners installed between the band and carrier pipe O.D.

Skids shall be glass reinforced plastic or other abrasion resistant insulating material. Under no circumstances shall metal skids be permitted. Skid height shall be adequate to prevent carrier pipe from contacting steel casing. Minimum installed clearance between the carrier pipe or mechanical connections and steel casing shall be two inches.

CASING END SEALS

Casing end seals shall be "Calipco model C" pull on casing end seals or approved equal. Alternate methods for sealing casing ends shall be subject to approval by the Engineer.

TESTING

After the steel casing and carrier pipe have been installed, but at least 48 hours prior to backfilling the jacking pit, the contractor shall contact the water utility to schedule an inspection by their NACE technician.

The water utility's NACE Technician shall conduct tests to verify that the carrier pipe is not in contact and shorted to the casing. Should the technician find an electrical short, the contractor shall correct the deficiency and schedule a re-test. When the technician has verified that no shorts exist between the steel casing and carrier pipe, the contractor may proceed with backfilling the jacking pit.

Testing and verification by the NACE technician does not relieve contractor from performing all tests and obtaining satisfactory results as required by Standard Detail W-700, Note 17.

Verification and/or test results shall be included in the final corrosion test report.

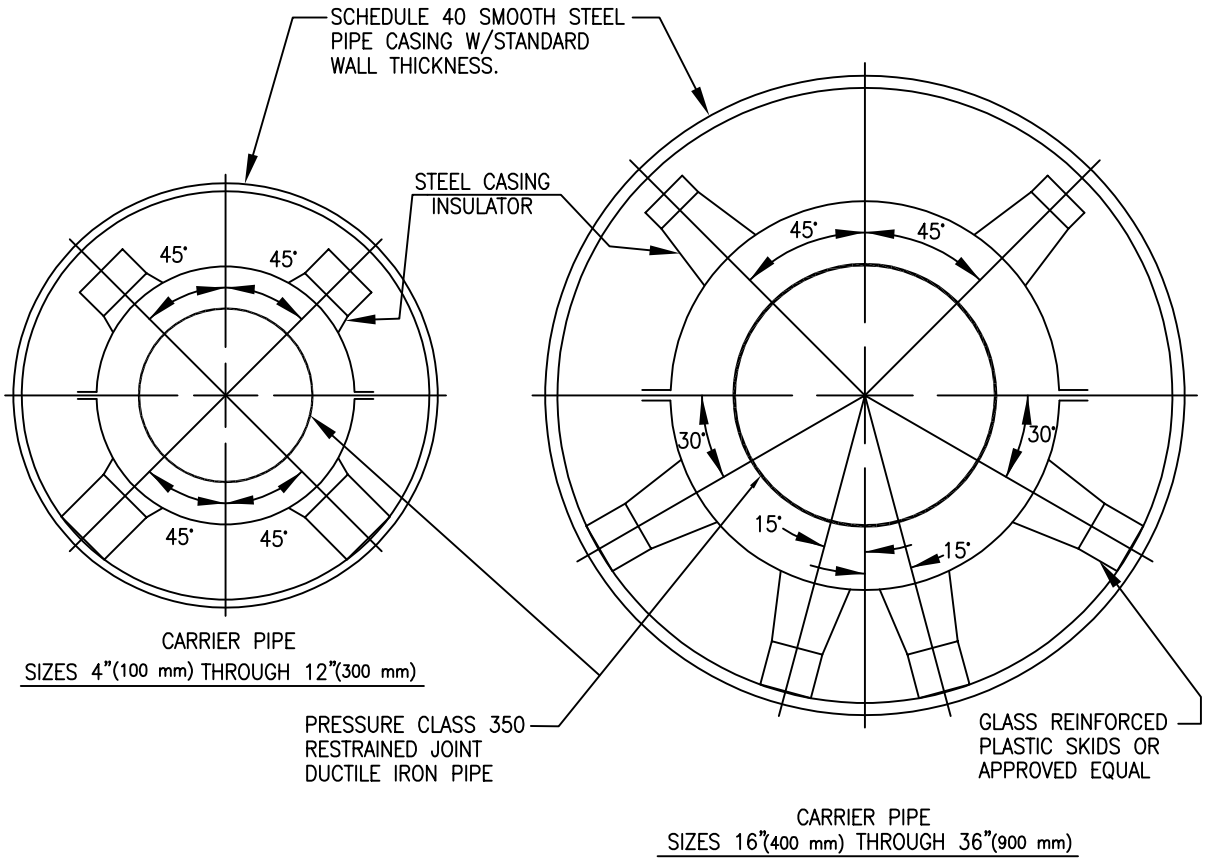

PIPE SIZE	MATERIAL	
	PRESSURE CLASS 350 RESTRAINED JOINT DUCTILE IRON	
	MAX. O.D. RESTAINED JT.	MIN. CASING O.D.
4" (100 mm)	10.20" (259.1 mm)	16" (400 mm)
6" (150 mm)	12.30" (312.4 mm)	18" (450mm)
8" (200 mm)	14.45" (367.0 mm)	22" (550 mm)
12" (300 mm)	18.30" (464.8 mm)	28" (700 mm)
16" (400 mm)	22.90" (581.7 mm)	32" (800 mm)
24"(600 mm)	32.94" (836.7 mm)	40" (1000 mm)
30" (750 mm)	39.17" (994.9 mm)	48" (1200 mm)
36" (900 mm)	46.00" (1.1684 m)	56" (1400 mm)

ISSUED:		STANDARD DETAIL		DETAIL NO.
6/97	TUCSON WATER	WSM BORING AND CASING	THE SEAL of PIMA COUNTY ARIZONA	W-800
REVISED:				
10/02				SHEET 2 OF 3

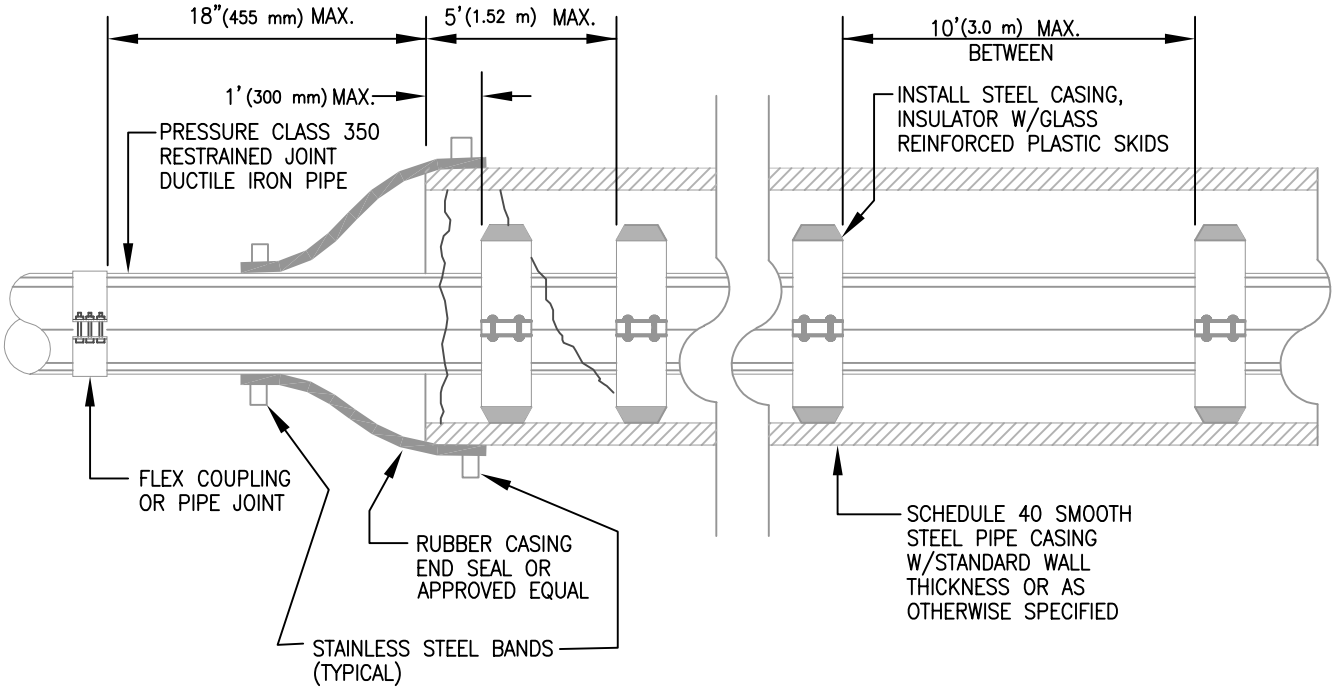

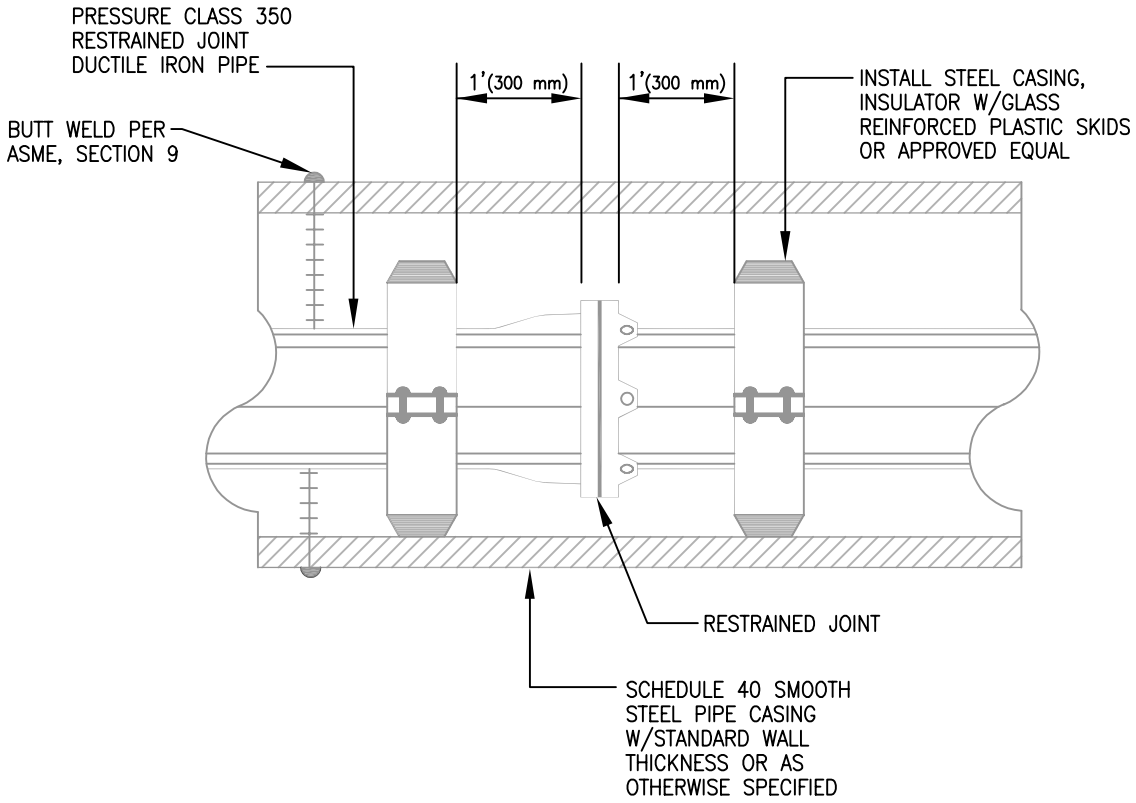

ISSUED:		STANDARD DETAIL		DETAIL NO.
6/97	TUCSON WATER	WSM BORING AND CASING	THE SEAL of PIMA COUNTY ARIZONA	W-800
REVISED:				
10/02				SHEET 3 OF 3

STANDARD SPECIFICATION FOR TAPPING SLEEVES IN ORDER TO HOT TAP CONCRETE CYLINDER PIPES

ALL LATERAL CONNECTIONS TYING INTO ANY CONCRETE CYLINDER PIPELINES, NEW OR EXISTING, SHALL BE ACCOMPLISHED WITH THE USE OF A MECHANICAL TYPE TAPPING ASSEMBLY. THE MATERIALS SUPPLIED SHALL MEET OR EXCEED THE FOLLOWING SPECIFICATIONS:

- Tapping sleeves for the above mentioned pipes shall be in accordance with the latest edition of the AWWA manual M–9. They shall also meet AWWA C 301 Standards pertaining to design, manufacturing, quality tests, and welder qualifications.
- The sleeves shall have a separate gland which permits installation of the sleeve prior to the cutting of the rods or prestressing wires.
- The gland shall have a fusion epoxy coated (per AWWA C 213) waterway and a 7/8"(22 mm) wide hydromechanical gasket set in a retaining groove of a pressure pressure plate.
- The pressure plate shall be gusseted to the draw flange to eliminate any flexing.
- The gland shall be equipped with load bearing set screws to protect the metal cylinder from being crushed, or distorted. The gland shall also have an opening (grout hole) for grouting of the annular space.
- The body of the sleeve shall be fusion epoxy coated per AWWA C 213.
- Tapping sleeves approved shall JCM #415 type 1 (ESS) or approved equal.
- The contractor shall provide 7 references of jobs that have been successfully completed using this sleeve design and 10 years of experience manufacturing this sleeve design.
- Welding onto these types of pipelines is strictly prohibited by the Tucson Water Department in accordance with AWWA M 9.
- In no case shall taps on concrete cylinder pipe be smaller than 8"(200 mm).

INSTALLATION PROCEDURES

1. Clean pipe in area where sleeve is to be installed. Remove any irregularities extending beyond the normal contour of the pipe surface. Check all measurements to be certain sleeve is correct size for the pipe.

2. Position gland on the pipe and mark area where mortar coating is to be removed.

3. Remove gland and set aside. Carefully remove mortar coating from the area where tap is to be made – exposing but not damaging the prestress wires and steel cylinder.

4. Check to make certain all grout gaskets are in place around the edge of the sleeve and around the outlet. Place the sleeve on the pipe with the outlet over the opening in the mortar coating (with grouting horns up) and install the straps. Tighten the straps with only sufficient torque to lightly seal the grout gaskets, alternating from one side to the other – starting at the outside straps and working in toward the center.

5. Pour cement grout into the grout horns in the sleeve filling the space between the sleeve and the pipe. Pound the sleeve with a hammer to vibrate grout into place. After the grout has set, tighten the 3/4"(19 mm) bolts on the straps to approximately 40 ft–lbs (55 Nm) torque. Then retighten to approximately 50 ft–lbs (70 Nm) torque. (Note: Torque given is based on clean and lightly lubricated threads).

6. Carefully cut and remove the exposed prestress wires to provide clearance for the gland to seal against the cylinder. For embedded cylinder pipe, the outer portion of the concrete core must be removed to expose the cylinder. Clean steel cylinder surface of any remaining concrete. (Note: If there is a weld seam on the cylinder of the pipe in the area of the tap, carefully grind the weld so that the taping sleeve will seal on it).

7. Check the gasket in the gland to make certain it is undamaged and in its retaining groove. Remove any tape used to secure gasket in place during shipment.

8. Install the four (4) threaded studs in the sleeve outlet to assist in properly aligning the gland. Install the gland in the sleeve outlet so that the contour of the gasket seat exactly matches the contour of the steel cylinder. Install the remainder of the draw bolts. Check the gasket seat alignment. Tighten the draw bolts evenly to compress the gasket. A feeler gauge can be used to check gasket position during tightening. When completely tightened there should be approximately 1/8"(3 mm) between the gasket seat and pipe cylinder.

9. After installation of the tapping gland tighten the three (3) load bearing set screws located between the draw bolts of the outer circle. This locks the gland in place and transfers any loading from the outlet onto the sleeve and away from the cylinder.

10. Install a flange insulating kit between the tapping valve and the existing pipe. See Std. Det. W–704.

11. Install the tapping valve utilizing the inner circle of studs and nuts furnished with the gland.

12. Use water to pressure test the gland seal, flange gaskets and tapping valve to assure all joints are tight and gaskets properly seated.

13. The Engineer shall contact the water utility NACE Technician to coordinate testing.

14. On completion of the tap pour cement mortar (2 parts sand, 1 part cement) into the opening between the gland and the saddle and into the grouting hole in the sleeve neck completely filling the space around the gland. A protective coating of cement mortar to a minimum thickness of 1"(25 mm) over the entire assembly including straps will further protect the sleeve.

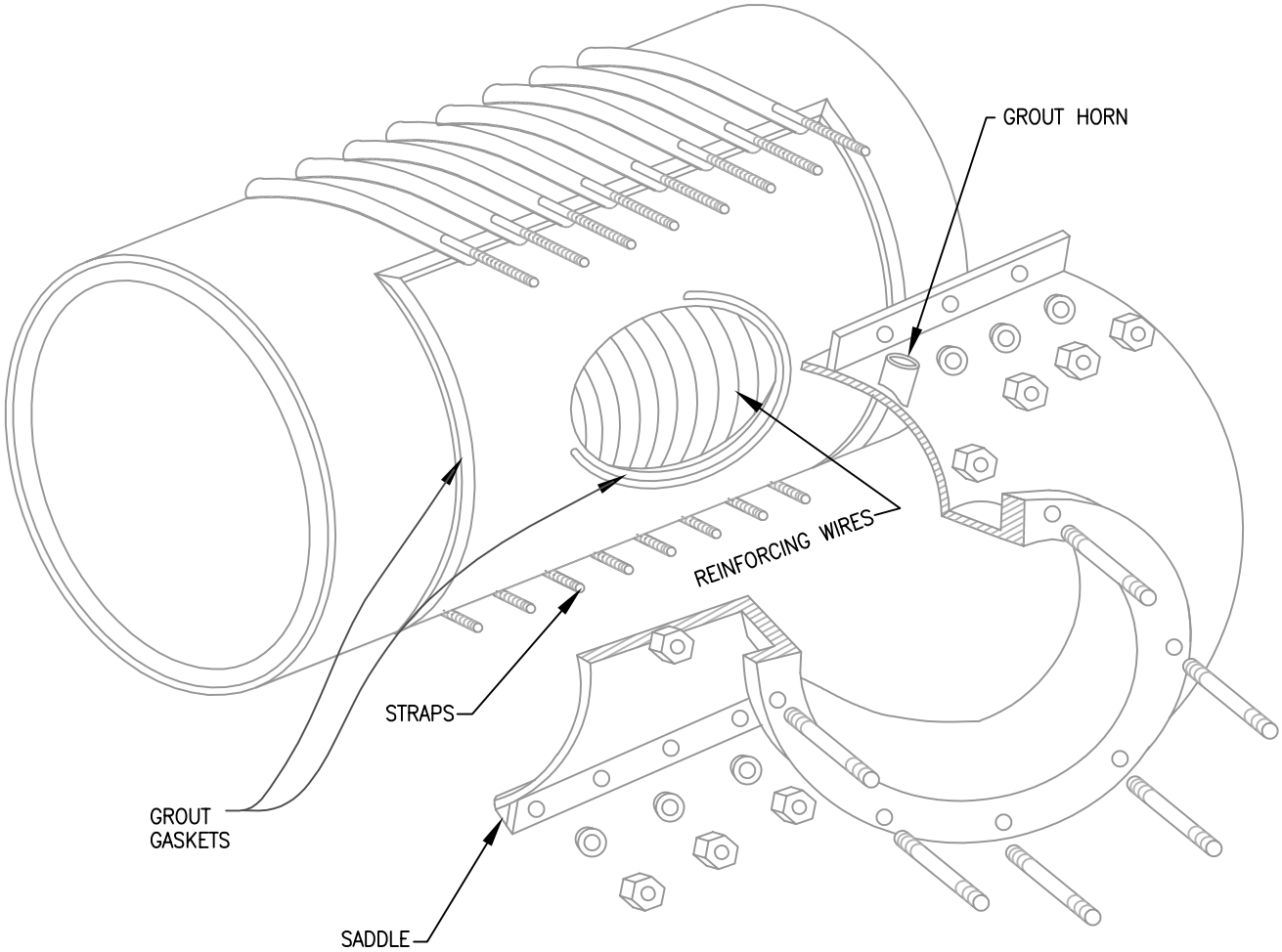

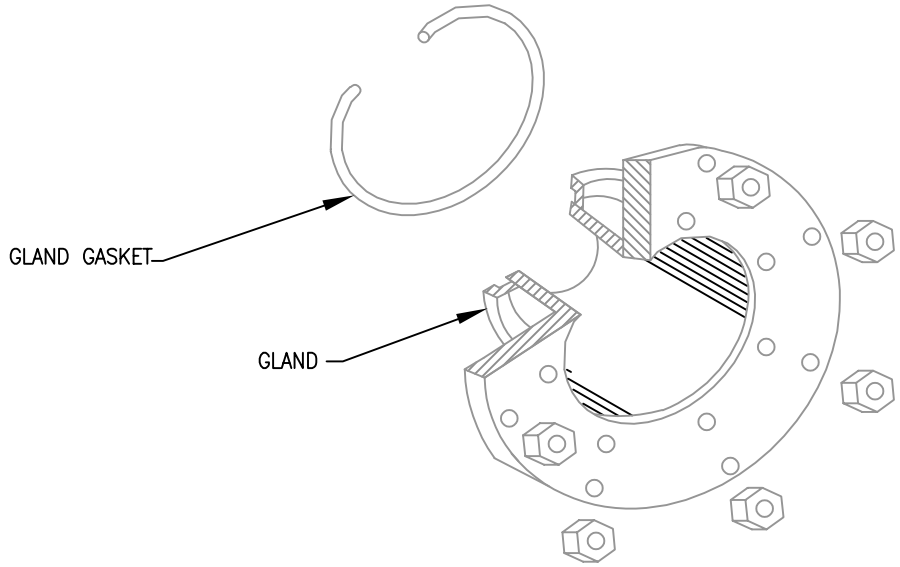

ISSUED:		STANDARD DETAIL		DETAIL NO.
6/00	TUCSON WATER	WSM CONCRETE CYLINDER PIPE TAP	THE SEAL of PIMA COUNTY ARIZONA	W-900
REVISED:				
10/02				SHEET 4 OF 6

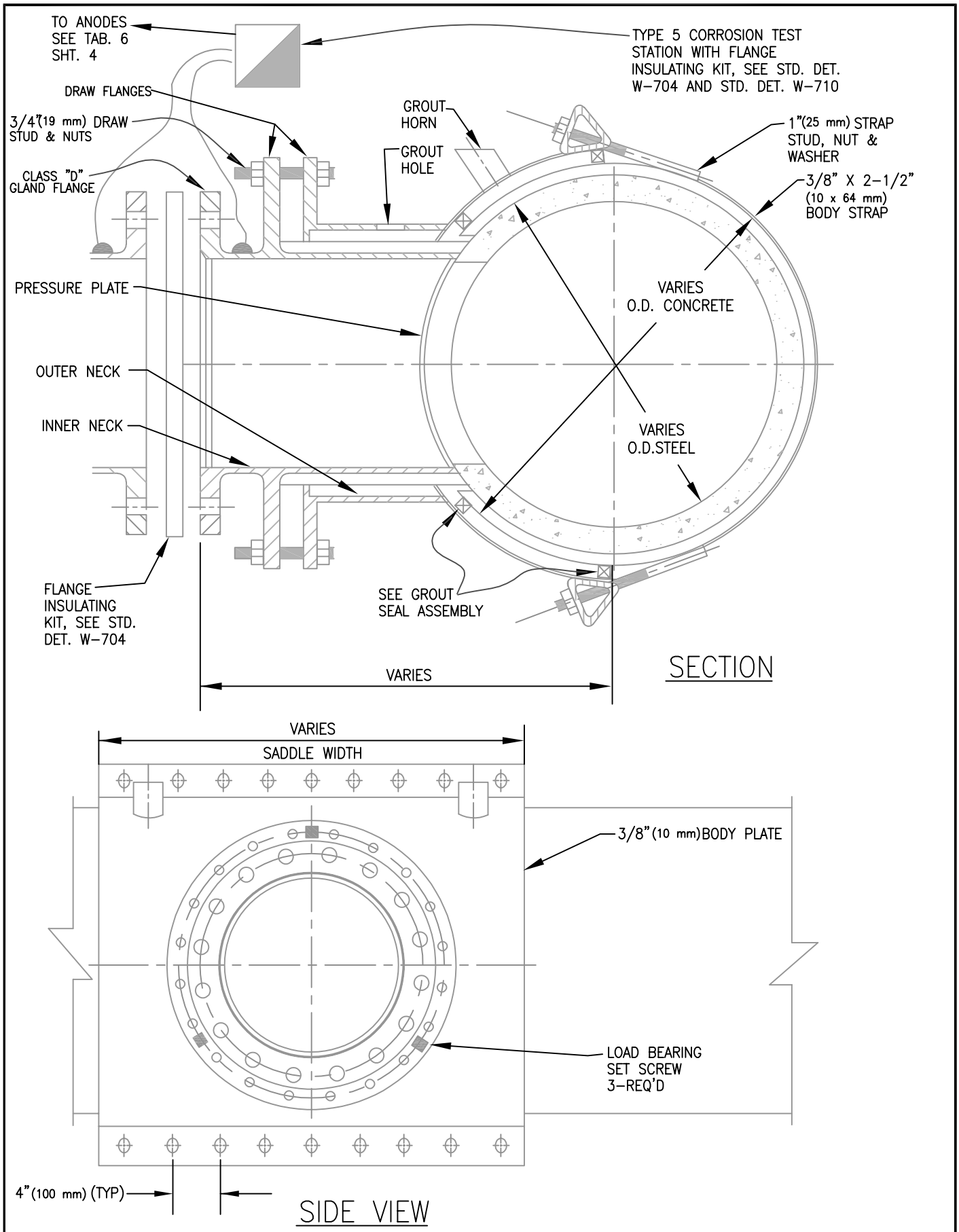

ISSUED:		STANDARD DETAIL		DETAIL NO.
8/00	TUCSON WATER	WSM CONCRETE CYLINDER PIPE TAP	THE SEAL of PIMA COUNTY ARIZONA	W-900
REVISED:				
10/02				SHEET 5 OF 6

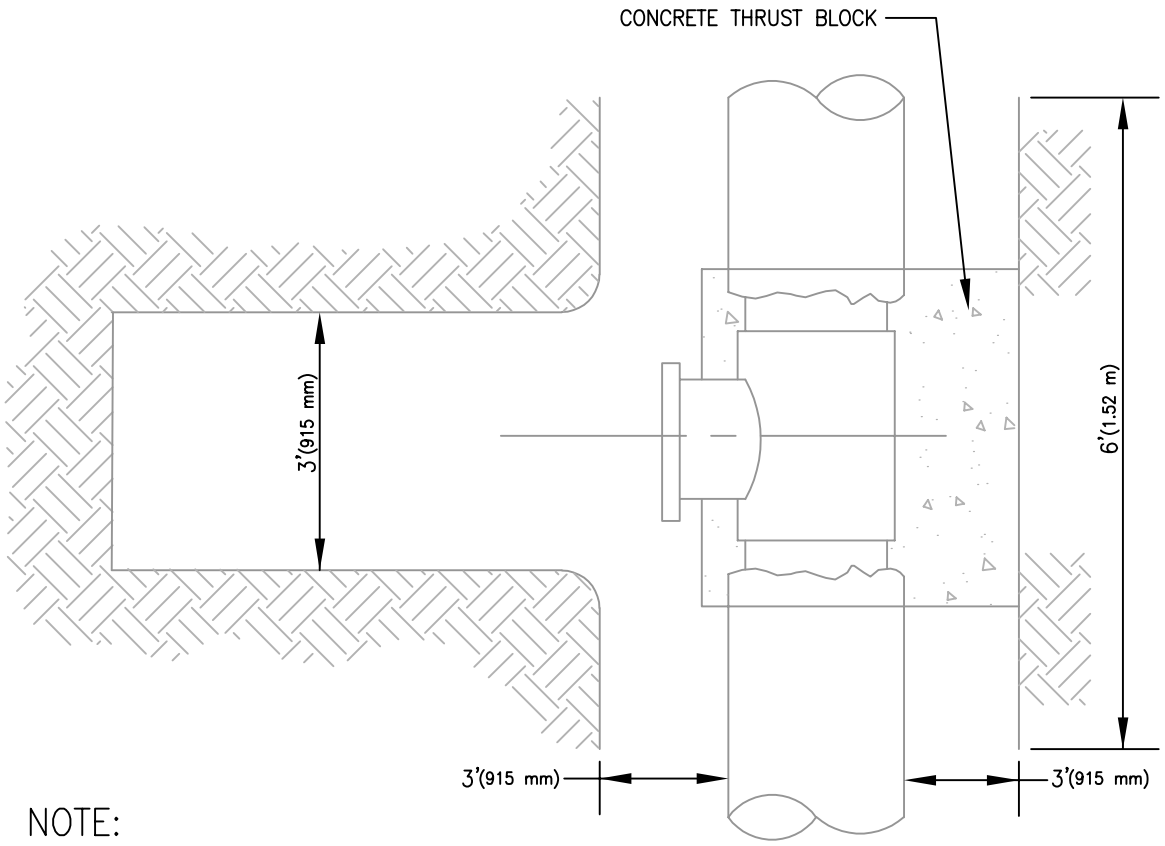

NOTE:

IF HOLE IS 5'(1.52 m) OR DEEPER IT MUST MEET STATE CODE OF SLOPE 3/4' TO 1'(750 mm TO 1 m) OR HAVE PROPER SHORING.

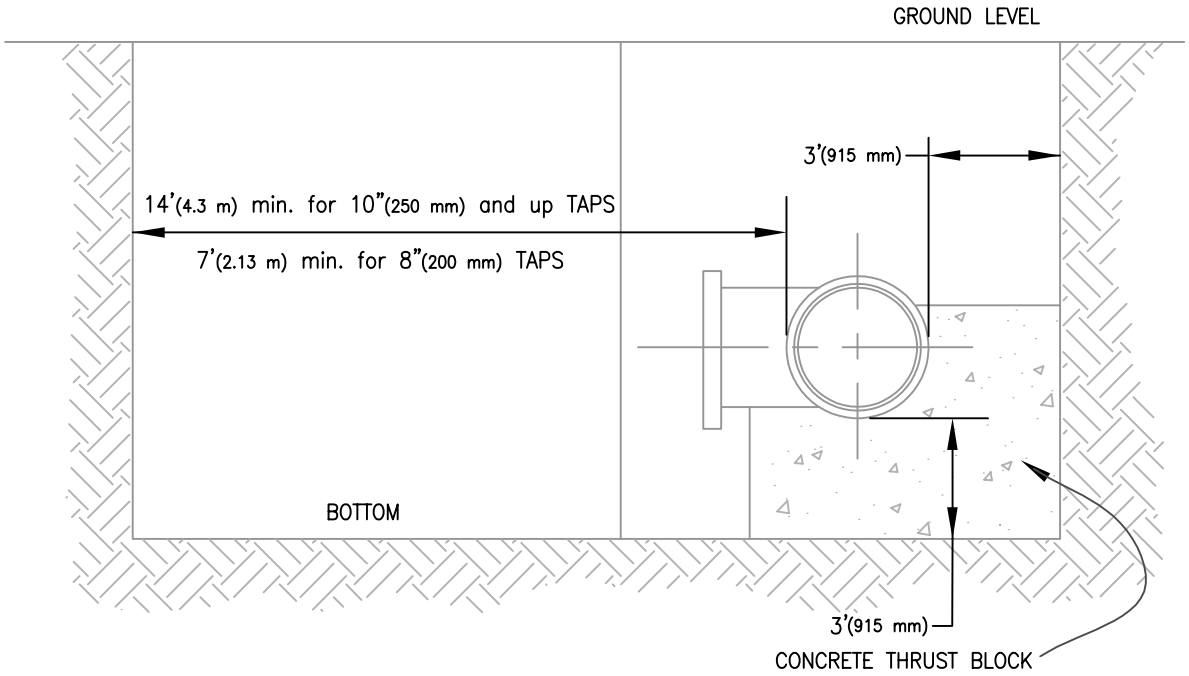

ISSUED:		STANDARD DETAIL		DETAIL NO.
8/00	TUCSON WATER	WSM CONCRETE CYLINDER PIPE TAP	THE SEAL of PIMA COUNTY ARIZONA	W-900
REVISED:				
10/02				SHEET 6 OF 6

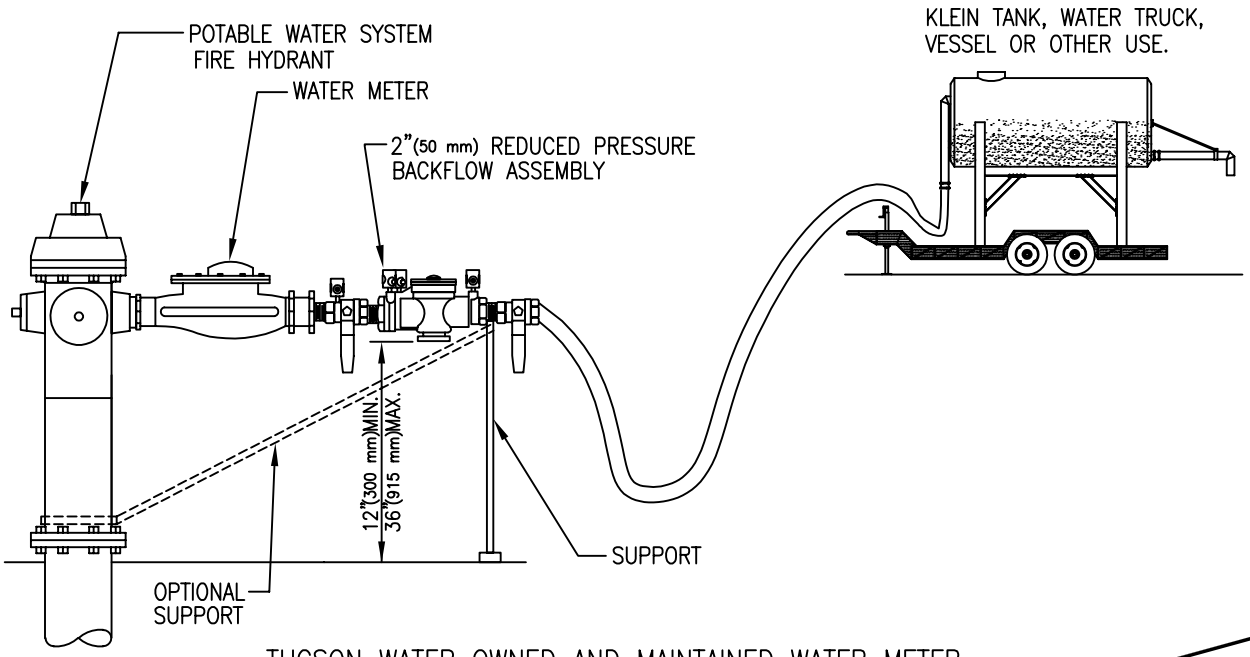

TUCSON WATER OWNED AND MAINTAINED WATER METER
WITH TUCSON WATER OWNED AND MAINTAINED
RP BACKFLOW ASSEMBLY

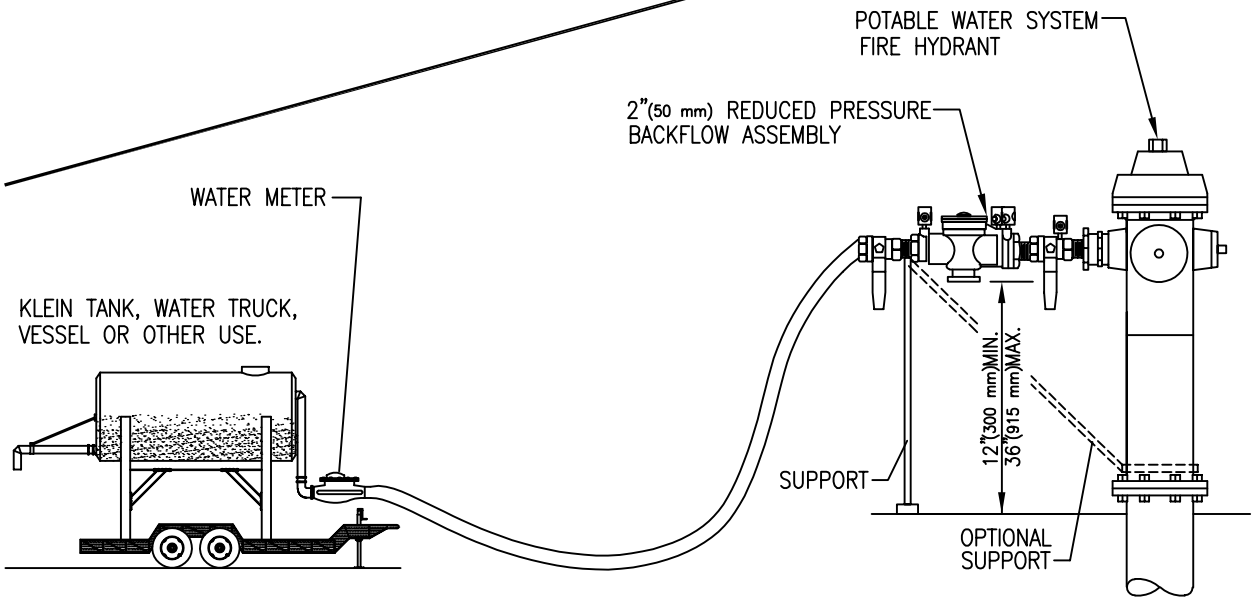

CONTRACTOR OWNED AND MAINTAINED WATER METER
WITH CONTRACTOR OWNED AND MAINTAINED
RP BACKFLOW ASSEMBLY

Notes:
1. All backflow assemblies shall be installed, maintained and tested in accordance with regulations.
2. Only one connection per hydrant is allowed unless otherwise authorized by the water utility.
3. Contact the appropriate water utility for a list of approved backflow assemblies or further information.

ISSUED:		STANDARD DETAIL		DETAIL NO.
8/00	TUCSON WATER	BACKFLOW PREVENTION FOR POTABLE WATER FIRE HYDRANT OR STANDPIPE WATER SERVICE	THE SEAL of PIMA COUNTY ARIZONA	W-1801
REVISED:				
10/02				SHEET 1 OF 1