ADEQ Arizona Department of Environmental Quality

ENGINEERING REVIEW
ALTERNATIVE REQUEST (A312G) FOR TYPE 4 GENERAL PERMIT APPLICATIONS

GENERAL INFORMATION

1 Project Name

Project Name Development Projects

2 Applicant (person responsible for overall compliance)

(Check One) [X] Owner [ ] Operator

Name Carol Johnson Phone 520 724-6334

Title Sanitary Engineering Manager Firm Name Pima County Wastewater Reclamation

Mailing Address 201 N. Stone Avenue City Tucson State AZ Zip 85701

Email carol.johnson@pima.gov

3 Contact Person/Agent (if different from applicant)

Name See Applicant. Phone

Title Firm Name

Mailing Address City State Zip

Email

4 Rule Information [ ] On-site ($250 fee), or [ ] Sewage Collection System ($750 fee)

Rule Citation of Requirement for Which Alternative is Requested R18-9-E301 4.01(D)(2)(c)(i)

Description of Requested Alternative PVC SDR35, PVC C900, and other classes of pipe as determined by design engineer as equivalent.

Continued on attachments [ ] No [X] Yes

5 Alternative Justification

The applicant shall provide sufficient information for the Department to determine that the change achieves equal or better performance compared with the general permit requirement, or addresses site or system conditions more satisfactorily than the general permit requirements (Please attach any necessary calculations, drawings, or other supporting documentation). .

See attachments.

Continued on attachments [ ] No [X] Yes

6 Applicant Certification

I, Carol Johnson, P.E., certify that this alternative request as described in this application and all attachments were prepared under my direction or authorization and all information is, to the best of my knowledge, true, accurate and complete. I also certify that this alternative request described in this form meets or exceeds the terms and conditions the General Aquifer Protection Permit(s) (A.A.C. R18-9-E301 through R18-9-E323) and applicable requirements of Arizona Revised Statutes Title 49, Chapter 2, and Arizona Administrative Code Title 18, Chapter 9 regarding aquifer protection permits.

Affix Seal (If appropriate)

Registered Professional Engineer (Sanitary) CERTIFICATE NO 34048 CAROL A. JOHNSON Date Signed 1-15-19 ARIZONA U.S.A.

Carol A. Johnson

Signature

1-15-19

Date

Carol A. Johnson

DEPARTMENT USE ONLY			
File Number	Approved E301 Washes	R G	4/9/2019
Fee for each request submitted	Yes / No	Check Number	

1110 WEST WASHINGTON, PHOENIX, AZ 85007
WWW.AZDEQ.GOV

PIMA COUNTY
WASTEWATER RECLAMATION
201 NORTH STONE AVENUE
TUCSON, ARIZONA 85701-1207

JACKSON JENKINS
DIRECTOR

PH: (520) 724-6500
FAX: (520) 724-9635

TECHNICAL MEMORANDUM

August 21, 2018
(Revised November 9, 2018)

TO: Eric Wieduwilt, P.E.

THRU: Carol Johnson, P.E., Francisco Galindo, P.E.

FROM: Kevin Josker, P.E.

SUBJECT: Engineering Design Standards, Appendix A – Scour Procedures

Sewer wash crossings are regulated per Pima County Standard Specifications and Details for Construction 2016 and Arizona Department of Environmental Quality (ADEQ) R18-9-E301(D)(2)(c)(i). They require the use of Ductile Iron Pipe (DIP) or *pipe with equivalent tensile and compressive strength, shear resistance, and scour protection*. Pima County Engineering Design Standard (EDS) 5.1.11(A) requires placement of the sewer line a minimum depth of 2-feet below the Maximum Predicted Scour Depth, Z_{max}. The upper limit is the total single-event (100-year) scour depth (Z_{TSE}), plus long term aggradation or degradation depth (Z_{LTD}) (EDS Appendix A, IV(4.1). Lateral loading from moving water and soil is eliminated on the pipe (the base, haunching, and shading are not affected). Because no lateral forces from moving water or soil are applied to the sewer line, the pipe does not require anchorage to a support structure or other special protection.

The State of Arizona has granted Pima County Department of Environmental Quality (PDEQ) authority to review, approve, and permit sewer construction plans in Pima County. Recently, PDEQ indicated they may provide a blanket waiver of the DIP requirement for installations if the available alternatives meet good engineering practice. RWRD recommends the practices described on the following pages as meeting the required criteria.

DESIGN CONSIDERATIONS

Engineering design of buried pipes require the pipe to perform while considering the static loads, live loads, and impact potential.

Static Loads - The deeper the pipe is buried, the larger the static loads, therefore, deep pipes have very heavy static loads. Flexible pipes do not react like rigid pipes, they deflect rather than crack. Surrounding soil becomes part of the support system. Soil stiffness is dependent on the level of compaction achieved around the pipe. The higher the compaction, the less the pipe deflects[1].

Dynamic Loads - Of greater concern to sewer design engineers are live loads on deep pipes. Usually HS20 loading is the design condition used to represent tractor-trailer traffic, which will be missing in wash crossings. Larger loading for wash maintenance vehicles is considered for scrapers, etc. Dynamic loading dissipates as depth increases. Proper backfill and compaction of the sewer bedding is important.

PVC Pipe Materials – Polyvinyl Chloride (PVC) sewer pipe normally used in RWRD's collection system is Standard Dimension Ratio (SDR) 35. This table indicates the physical characteristics of pipe available for installation.

Sewer Pipe Size Comparison[2]

Pipe	Size	SDR	Exterior Diameter	Interior Diameter	Minimum Wall Thickness
PVC	8	35	8.4”	7.92”	0.240”
		26	8.4”	7.75”	0.323”
PVC	10	35	10.5”	9.90”	0.300”
		26	10.5”	9.69”	0.404”
PVC	12	35	12.5”	11.78”	0.360”
		26	12.5”	11.54”	0.481”
PVC	15	35	15.3”	14.43”	0.437”
		26	15.3”	14.12”	0.588”

Calculating Allowable Burial Depth – Failure criterion is not fracture strength, instead, it is measured by pipe diametric deflection. Industry recommendations for maximum deflection when used for gravity sewers is 7.5%. Safety factors of 4:1 or 6:1 are incorporated into this calculation[3]. Pipe deflection is estimated by use of an empirical equation known as the “Modified Iowa Equation”[4].

MODIFIED IOWA EQUATION

% Deflection = [0.1 (W' + P) 100] / [0.149 (PS) + 0.061 (E')]

Where:

% Deflection = predicted percentage of diametric deflection.
W' = Live Load (psi): pressure transmitted to the pipe from traffic on the ground surface. Live Load values are found in Table 2.
P = Prism Load (psi): pressure acting on the pipe from the weight of the soil column above the pipe (also called "Dead Load"). Prism Load values are found in Table 3.
PS = Pipe Stiffness (psi): a flexible pipe's resistance to deflection in an unburied state. Pipe Stiffness values for JM Eagle products are found in Table 4.
E' = Modulus of Soil Reaction (psi): stiffness of the embedment soil. Values for Modulus of Soil Reaction are found in Table 5.

In the example wash crossing, the location selected is the Rillito Wash east of 1st Avenue. This location is typical of the larger washes in town in that it is wide and conveys a large volume of runoff (Q > 10,000 cfs), specifically 32,013 cfs. Parameters considered include General Scour Depth (Z_G) and Anti-Dune Trough Depth (Z_A). Other factors (Bend, Abutment, Confluence, Pier, Culvert, and Drop) were not considered because they are not present. Long term aggradation/degradation and thalweg elevation are not known at this location. A safety factor (C_U) of 1.55 was used.

Pima County Regional Flood Control District (RFCD) utilizes an Excel Spreadsheet based on the Michael E. Zeller procedures and guidelines presented as Appendix A in the Engineering Design Standards. Following is a copy of the results based on RFCD information. Blue boxes indicate given information from RFCD models, the yellow box is the calculated scour depth.

SDR 35 was used in the calculation and has a minimum pipe stiffness of 46 psi (Table 4)[5]. The Modulus of Soil Reaction of 2,000 psi for a high degree of compaction for a Class III soil was used (Table 5)[6]. Note the Prism Load of soil and water of 9.33 psi is lighter than a soil load, only, of 13.33 psi (Table 3)[7], considering a Soil Unit Weight of 120 pcf and a height of 16-feet. The percent deflection of 0.72% is far less than the 5% according to ASTM D2412 and the RWRD SSDC Section 3.2.2(C).

In a dry wash situation, an occasional maintenance vehicle may drive over the pipe with a loading greater than an HS20 live load. Consider the loading from Table 2[8] for an HS20 load. At 7.40-feet the live load is approximately 1.00 psi (W'), the prism load (Table 3) is approximately 6.0 psi (P), pipe stiffness (PS) is 46 psi, and E' is 2,000 psi. Plugging into the Modified Iowa Equation, the percent deflection is 0.54%, still considerably lower than 5%. Greater loadings than HS20 are analyzed near the end of this report.

A hypothetical calculation is included for comparison, increasing the loading on a 12-inch pipe, 20-feet below the bottom of the channel bed, with a water depth of 10-feet. The scour zone is estimated to be 6.25-feet and is proportional to the previous example. The depth of cover is then 13.75-feet and assumed to be wet, not saturated, to provide an extreme situation. Also included is a wet (no surface flow) and dry situation. Results indicate percent deflection still considerably lower than 5%.

SDR 35 pipe is more than adequate for use in this application and is equivalent to the performance of DIP.

DIP Disadvantages

Pima County Regional Wastewater Reclamation Department (RWRD) intends to eliminate use of ductile iron pipe (DIP) for new sewers, replacements, and repairs to the maximum extent possible. DIP experiences internal pipe corrosion associated with exposure to sewer gases and routine maintenance. RWRD has experienced lining failures on DIP for many years and has tried various pipe coatings with little or no success. Often the coatings appear promising based on lab tests or manufacturing data, however, in actual practice the interior coatings tend to quickly fail, or fail quality assurance tests at the construction site. These failures diminish the flow capacity, and require additional maintenance. Cured In Place Pipe (CIPP) has been used to line the interior of pipes after corrosion has been cleaned, adding additional structural strength (4,500 psi for resin cured/felt composites)[9]. CIPP manufacturing and installation costs are very high and are installed by specialized contractors.

RWRD Conveyance Department has inspected thousands of miles of the sewer system with Closed Circuit Television (CCTV). Internal protective coatings have deteriorated within five years of installation and must be repaired. Several coating products have been used with no success (see pictures end of memo).

Disadvantages of using DIP:

1. Subject to external corrosion (galvanic and electromagnetic currents due to soil chemical reactions).
2. Subject to internal corrosion (due to hydrogen sulfide gas production).
    a. Effective lifespan reduced, and
3. Requires the application of coatings and wraps[10].
    a. Externally with an asphaltic compound by the manufacturer, then wrapped in polyethylene sheets when installed.
    b. Internally with cement-mortar lining, polyethylene, and petroleum asphaltic coal tar epoxy[11].
4. DIP is heavy, requiring the use of heavy equipment and larger work crews for installation. The laying lengths are 18- and 20-feet, weighing 425/475 lbs for an 8-inch pipe up to 4930/5460 lbs for a 36-inch pipe[12]. A work crew would typically consist of five people.

Over the last three years, the Conveyance Department reported 157 pipes were lined at the cost indicated in the table below.

Over 3 JOC Years*		
Assets	Feet	Actual Cost
157	28,200	**$3.2 M**
Open Work Orders		
Assets	Feet	Projected Cost
482	831,000	**$96.0 M**

* Conveyance Department Costs reported June 2018

None of the PVC assets installed in the last 15-years have required any lining, or experienced any type of failure, according to Conveyance Department records. PVC would have provided considerable cost savings to the County if used at installation, funds that could have been designated for updating and improving the public sewer system. Expenditures for maintaining the existing 482 DIP assets cited could exceed $96M, bringing the total to over $100M.

Conclusion

PVC is resistant to chemical corrosion, abrasion, and wear without any coatings or liners. Its smoother wall surfaces reduce fluid friction and resistance to flow resulting in higher capacity and lower maintenance costs. PVC pipe is light weight and presents a lower cost for transportation and installation than DIP. It is more flexible than DIP, with a higher modulus of elasticity. Laying lengths are 14- and 20-feet, weighing 60/85 lbs for an 8-inch SDR 35 pipe up to 1302/1860 lbs for a 36-inch PS46 pipe[13]. A work crew of 3 people could handle installation of this pipe.

Advantages of using PVC include[14]:

1. PVC is lighter than DIP, costs less, is transported easily, installs for less.
2. PVC is compatible with any natural soil condition
3. PVC does not require corrosion protection internally or externally.
4. PVC is not subject to galvanic and electromagnetic effects.
5. PVC reduces operation and maintenance costs.
6. PVC tensile strength and modulus of elasticity are more than adequate for its application.

PVC SDR 35 pipe meets the expectations of an “approved equal” to DIP for the applications and service life contained in the Pima County Engineering Design Guide for sanitary sewer. PVC can be utilized for wash crossings below the scour depth as depicted in the Scour Procedures and Guidelines for Sanitary Sewer Crossings of Alluvial Watercourses. It can be used within the scour depth if scour protection is constructed as depicted in RWRD Standard Detail 113 and Figures 6, 11, and 12 of the above mentioned guidelines. PVC can be used in above ground wash crossings as long as the pipe is protected from UV exposure, adequate joint restraints are specified and necessary pipe supports are constructed.

It is recommended PDEQ be allowed to specify the use of PVC in the mentioned conditions of wash crossings.

RWRD Standard Detail 113 depicts a sewer wash crossing within the scour zone. DIP with restrained joints is recommended, protected by a reinforced shotcrete dike. The walls are a minimum 6-inches thick. The upstream toe down is equal to the Total single-event (100-year) scour depth, $Z_{TSE,}$ in feet. The downstream toe down elevation extends deeper into the earth at an elevation that includes (Z_{TSE} + Z_{LTD} (long term aggradation or degradation) = Z_{MAX}) + 2-feet. This grade control structure provides adequate protection for the pipe in a 100-year storm event. SDR 35, 26, or C-900 PVC pipe should replace DIP and provide the maintenance free service and extended life cycle PVC is known for.

Rillito River Scour Example

The yellow line represents water surface elevation (2320), extending bank to bank.

Figure 1

PIMA COUNTY REGIONAL FLOOD CONTROL DISTRICT

SCOUR FOR SANITARY SEWER CROSSINGS OF ALLUVIAL WATERCOURSES

WITH LOCAL SCOUR AT ABUTMENTS, PIERS, CHANNEL DROPS, CULVERTS, EXPOSED SEWER, & CONFLUENCES

W/O LONG TERM DEGRADATION

Date:

rm rev. 08/03/17)

Step 1.	**Enter Project Information.**								**Project Address**
									Data Sheet Preparer
			N/A	N/A	N/A	N/A	N/A		**Conveyance Subsection**
Step 2.	**Bend Scour? Enter N if no.**	SEC =	24	0	0	0	0		***Description***
	If Yes, Enter α.	α =	N	N	N	N	28	(deg)	Bend angle (See **BENDS** tab)
Step 3.	**Abutment scour? Enter N if no.**	L_e =	N	N	N	N	N	(ft)	Encroachment length projected normal to flow
	If Yes, Enter L_e & θ_a.	θ_a =	N	N	N	N	N	(deg)	Slope angle of abutment face from horizontal
Step 4.	**Scour at Channel Confluence? Enter N if no.**	Y_{MS} =	N	N	N	N	N	(ft)	Flow depth in confluence, water surface to mean scoured depth
	If Yes, Enter Y_{MS} & α.	α =	N	N	N	N	N	(deg)	Angle of confluence
Step 5.	**Pier scour?**	b_p =	N	N	N	N	N	(ft)	Physical pier width, excluding anticipated debris blockage
	Enter N if no.	L =	N	N	N	N	N	(ft)	Length of pier wall
	If Yes, enter Y_1, b_p, L, & Φ_p.	Y =		N	N	N	N	(ft)	Flow depth upstream of pier (blank = max depth)
		Φ_p =	N	N	N	N	N	(deg)	Angle of approach flow in relationship to pier wall
Step 6.	**Scour at culvert outlet?**	D =	N	N	N	N	N	(ft)	Diameter of pipe or rise of box
	Enter N if no.	B =	N	N	N	N	N	(ft)	Width of box (blank or N for pipe)
	If Yes, enter D, B, A, & Shape.	A =	N	N	N	N	N	(sq.ft)	Cross sectional area of jet issuing from culvert
		Shape =	N	N	N	N	N	(dim)	Culvert shape enter PIPE or BOX
Step 7.	**Scour at drop? Enter N if no.**	Y_1 =	N	N	N	N	N	(ft)	Tailwater depth (blank to use max depth)
	If Yes, enter Y_1, Y_2, & h.	Y_2 =	N	N	N	N	N	(ft)	Headwater depth
		h =	N	N	N	N	N	(ft)	Exposed height on donwstream side of drop structure
Step 8.	**Scour for Sewer in Scour Zone? Enter N if no.**	D_o=	N	N	N	N	N	(ft)	Outer diameter of sewer pipe, excluding anticipated debris hang-up
	If Yes, enter D_o & e.	e =	0	0	0	0	0	(ft)	Initial gap between sewer pipe bottom and undisturbed erodible bed
Step 9.	**Enter safety factor for scour.**	C_U=	1.55	1.55	1.55	1.55	1.44	(dim)	Nonuniform scour coefficient due to flow irregularities

Step 10. Enter hydraulic characteristics for up to 5 sections in the blue fields below. HEC-RAS output may be pasted into RAS OUT tab to facilitate data entry.

INPUT HYDRAULIC CHARACTERISTICS OF CHANNEL							*CALCULATED CHARACTERISTICS*					*CALCULATED INDIVIDUAL SCOUR COMPENENTS (ft)*										
S	V	A	T	WSL	ELMN	S_E	Q	Y_H	Y_{MAX}	F	r_C/T	Z_G	Z_B	Z_A	Z_C	Z_T	Z_{LB}	Z_{LE}	Z_{LGC}	Z_{CUL}	Z_{SS}	Z_{TSE}
E	(fps)	(ft^2)	(ft)	(ft)	(ft)	(dim)	(cfs)	(ft)	(ft)	(dim)	(dim)	SPSS	SPSS	SPSS	SPSS	SPSS	SPSS	SPSS	SPSS	SPSS	SPSS	(ft)
C							V*A	A/T	wsl-elmn	Eq 8.3		4.2.1.1	4.2.4.2	4.2.2.1	4.2.5.1	4.2.3.1	4.2.6.2.1	4.2.6.3.1	4.2.6.4.1	4.2.6.1.1	4.2.6.5.1	4..1.3
24	11.3	2833.0	331.0	2320.0	0.0	0.003	32013	8.6	2320.0	0.7	0.0	1.76	0.0	1.7	0.0	0.0	0.0	0.0	0.0	0.0	0.0	5.4
							0	0.0	0.0	0.0	0.0	0.00	0.0	0.0	0.0	0.0	0.0	0.0	0.0	0.0	0.0	0.0
							0	0.0	0.0	0.0	0.0	0.00	0.0	0.00	0.0	0.0	0.0	0.0	0.0	0.0	0.0	0.0
							0	0.0	0.0	0.0	0.0	0.00	0.0	0.0	0.0	0.0	0.0	0.0	0.0	0.0	0.0	0.0
							0	0.0	0.0	0.0	0.0	0.00	0.0	0.0	0.0	0.0	0.0	0.0	0.0	0.0	0.0	0.0

Table 1

A graphical representation for this location utilizing a 24-inch pipe.

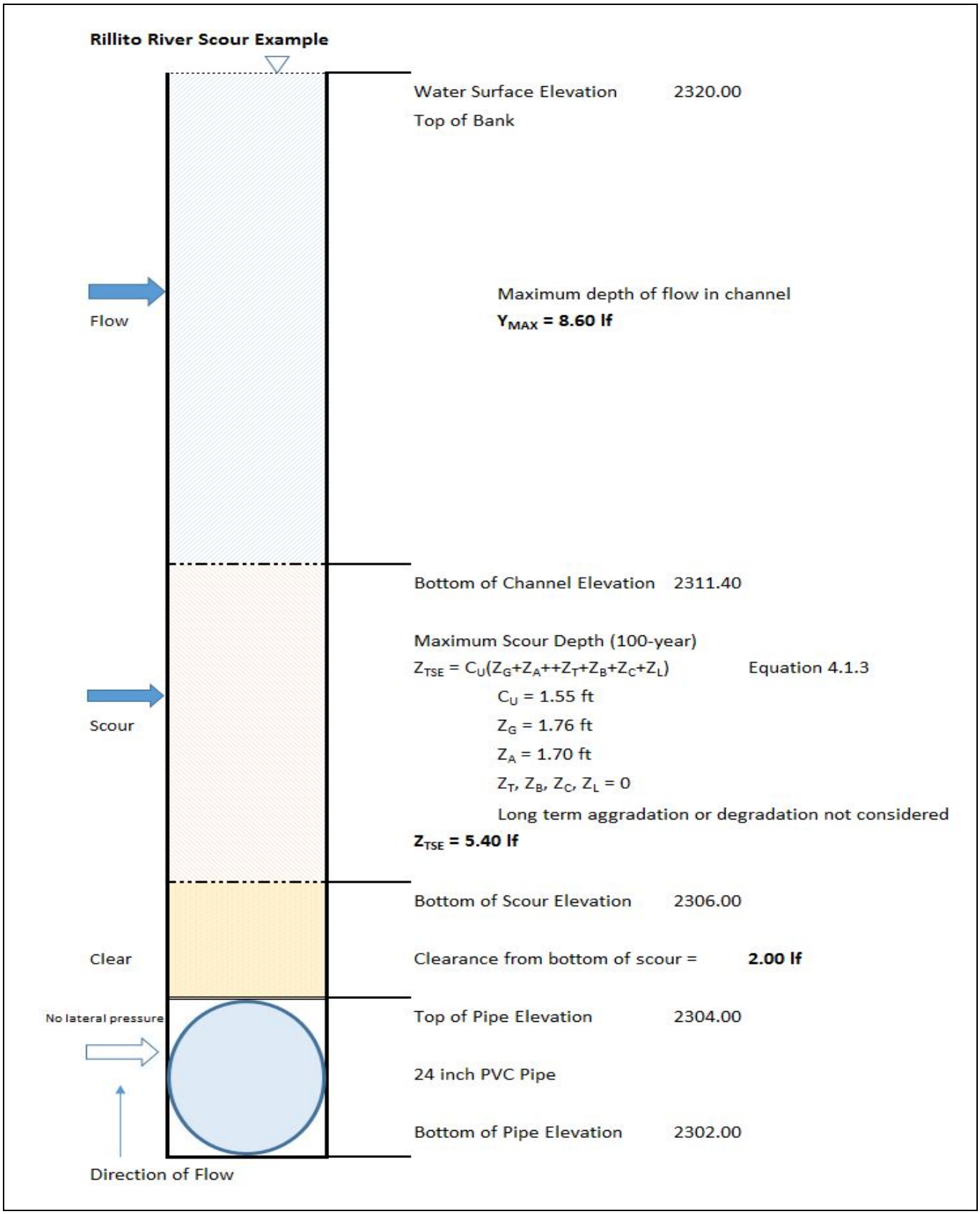

Flow Zone	Wt_{WATER} = 62.4 pcf x 8.60 lf =	537 psf
Scour Zone	Wt_{SAT} = 5.40 lf x 92.00 pcf =	497 psf
	Use maximum dense saturated weight	
	Note buoyancy decreases load on pipe	
Clear Zone	Wt_{WET} = 2.00 lf x 155.00 pcf =	310 psf
	Use maximum dense wet weight instead of saturated weight to eliminate buoyancy concerns	
	$Wt_{TOTAL} = Wt_{WATER} + Wt_{SAT} + Wt_{WET}$ psf	
	Wt_{TOTAL} = (537 + 497 + 310) psf =	1344 psf
		9.33 psi
Wet Zone	No water on channel surface, cover wet	
	Wt_{WET} = 7.40 lf x 155.00 pcf =	1147 psf
		7.97 psi
Dry Zone	No water	
	Wt_{DRY} = 7.40 lf x 120.00 pcf =	888 psf
		6.17 psi

MODIFIED IOWA EQUATION
% Deflection = [0.1 (W' + P) 100] / [0.149 (PS) + 0.061 (E')]
Where: **% Deflection** = predicted percentage of diametric deflection. **W' = Live Load** (psi): pressure transmitted to the pipe from traffic on the ground surface. Live Load values are found in Table 2. **P = Prism Load** (psi): pressure acting on the pipe from the weight of the soil column above the pipe (also called "Dead Load"). Prism Load values are found in Table 3. **PS = Pipe Stiffness** (psi): a flexible pipe's resistance to deflection in an unburied state. Pipe Stiffness values for JM Eagle products are found in Table 4. **E' = Modulus of Soil Reaction** (psi): stiffness of the embedment soil. Values for Modulus of Soil Reaction are found in Table 5.

	Water, Soil Pressure		% Deflection
Scour Zone	W'	0 psi	0.7243%
	P	9.33 psi	<< 7.5%
	PS	46 psi	
	E'	2000 psi	

	Soil Pressure		% Deflection
Wt_{WET}	W'	1 psi	0.6185%
	P	7.97 psi	<< 7.5%
	PS	46 psi	
	E'	2000 psi	

	Soil Pressure		% Deflection
Wt_{DRY}	W'	1 psi	0.4788%
	P	6.17 psi	<< 7.5%
	PS	46 psi	
	E'	2000 psi	

Hypothetical Scour Example

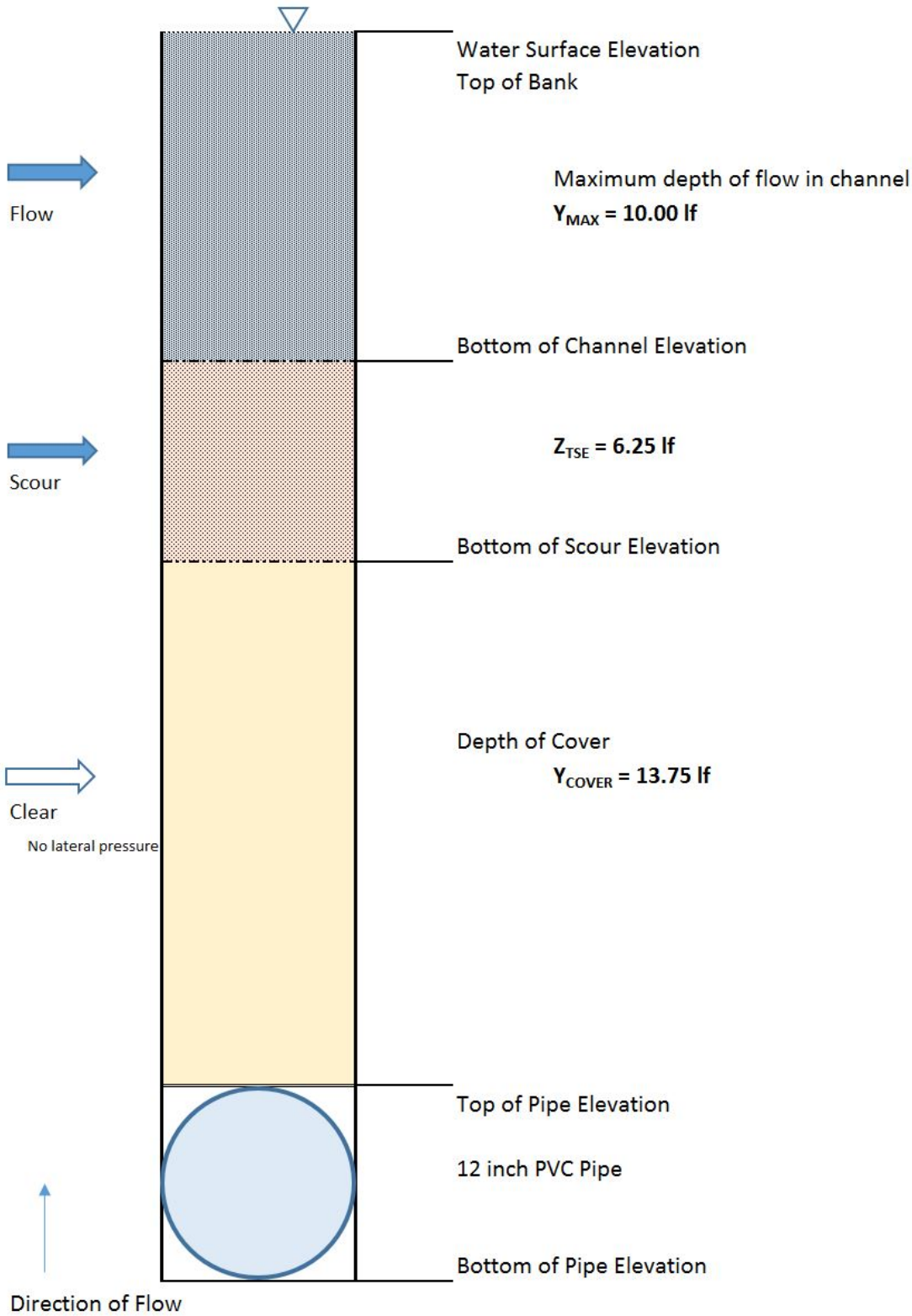

Flow Zone	Wt_{WATER} = 62.4 pcf x 10.00 lf = 624 psf	
Scour Zone	Wt_{SAT} = 6.25 lf x 92.00 pcf = 575.00 psf Use maximum dense saturated weight Note buoyancy decreases load on pipe	
Clear Zone	Wt_{WET} = 13.75 lf x 155.00 pcf = 2131.00 psf Use maximum dense wet weight instead of saturated weight to eliminate buoyancy concerns	
	$Wt_{TOTAL} = Wt_{WATER} + Wt_{SAT} + Wt_{WET}$ psf	
	Wt_{TOTAL} = (624 + 575 + 2131) psf =	3330 psf
		23.12 psi
Wet Zone	No water on channel surface, cover wet	
	Wt_{WET} = 20.00 lf x 155.00 pcf =	3100 psf
		21.53 psi
Dry Zone	No water	
	Wt_{DRY} = 20.00 lf x 120.00 pcf =	2400 psf
		16.67 psi

MODIFIED IOWA EQUATION
% Deflection = [0.1 (W' + P) 100] / [0.149 (PS) + 0.061 (E')]
Where: **% Deflection =** predicted percentage of diametric deflection. **W' = Live Load** (psi): pressure transmitted to the pipe from traffic on the ground surface. Live Load values are found in Table 2. **P = Prism Load** (psi): pressure acting on the pipe from the weight of the soil column above the pipe (also called "Dead Load"). Prism Load values are found in Table 3. **PS = Pipe Stiffness** (psi): a flexible pipe's resistance to deflection in an unburied state. Pipe Stiffness values for JM Eagle products are found in Table 4. **E' = Modulus of Soil Reaction** (psi): stiffness of the embedment soil. Values for Modulus of Soil Reaction are found in Table 5.

	Water, Saturated, Wet		% Deflection
Wt_{TOTAL}	W'	0 psi	1.7943%
	P	23.12 psi	<< 7.5%
	PS	46 psi	
	E'	2000 psi	

	Wet Soil		% Deflection
Wt_{WET}	W'	0 psi	1.6709%
	P	21.53 psi	<< 7.5%
	PS	46 psi	
	E'	2000 psi	

	Dry Soil		% Deflection
Wt_{DRY}	W'	0 psi	1.2937%
	P	16.67 psi	<< 7.5%
	PS	46 psi	
	E'	2000 psi	

	Part. Size & Gradation				Voids*					Unit Weight† (lb./cu.ft)						
	Approx. Size Range (mm.)		Approx. D_{10} (mm.)	Approx. Range Unif. Coef., C_u	Void Ratio			Porosity (%)		Dry Wt., γ_{dry}			Wet Wt., γ_{wet}		Sub. Wt., γ_{sub}	
	D_{max}	D_{min}			e_{max} (loose)	e_{cr}	e_{min} (dense)	n_{max} (loose)	n_{min} (dense)	Min. (loose)	100% Mod. AASHO	Max. (dense)	Min. (loose)	Max. (dense)	Min. (loose)	Max. (dense)
Granular Materials																
1. Uniform Materials																
a. Equal spheres (theoretical values)	—	—	—	1.0	0.92	—	0.35	47.6	26.0	—	—	—	—	—	—	—
b. Standard Ottawa SAND	0.84	0.59	0.67	1.1	0.80	0.75	0.50	44	33	92	—	110	93	131	57	69
c. Clean, uniform SAND (fine or medium)	—	—	—	1.2 to 2.0	1.0	0.80	0.40	50	29	83	115	118	84	136	52	73
d. Uniform, inorganic SILT	0.05	0.005	0.012	1.2 to 2.0	1.1	—	0.40	52	29	80	—	116	81	136	51	73
2. Well-graded Materials																
a. Silty SAND	2.0	0.005	0.02	5 to 10	0.90	—	0.30	47	23	87	122	127	88	142	54	79
b. Clean, fine to coarse SAND	2.0	0.05	0.09	4 to 6	0.95	0.70	0.20	49	17	85	132	138	86	148	53	86
c. Micaceous SAND	—	—	—	—	1.2	—	0.40	55	29	76	—	120	77	138	48	76
d. Silty SAND & GRAVEL	100	0.005	0.02	15 to 300	0.85	—	0.14	46	12	89	—	146‡	90	155‡	56	92
Mixed Soils																
1. Sandy or silty CLAY	2.0	0.001	0.003	10 to 30	1.8	—	0.25	64	20	60	130	135	100	147	38	85
2. Skip-graded silty CLAY with stones or rk. frag.	250	0.001	—	—	1.0	—	0.20	50	17	84	—	140	115	151	53	89
3. Well-graded GRAVEL, SAND, SILT & CLAY mixture	250	0.001	0.002	25 to 1000	0.70	—	0.13	41	11	100	140	148§	125	156§	62	94
Clay Soils																
1. CLAY (30 to 50% clay sizes)	0.05	0.5μ	0.001	—	2.4	—	0.50	71	33	50	105	112	94	133	31	71
2. Colloidal CLAY (-0.002 mm. ≥ 50%)	0.01	10Å	—	—	12	—	0.60	92	37	13	90	106	71	128	8	66
Organic Soils																
1. Organic SILT	—	—	—	—	3.0	—	0.55	75	35	40	—	110	87	131	25	69
2. Organic CLAY (30 to 50% clay sizes)	—	—	—	—	4.4	—	0.70	81	41	30	—	100	81	125	18	62

* Granular materials may reach e_{max} when dry or only slightly moist. Clays can reach e_{max} only when fully saturated.

† Granular materials reach minimum unit weight when at e_{max} and with hygroscopic moisture only. Clays reach minimum unit wet weight when fully saturated at e_{max}. The unit submerged weight of any saturated soil is the unit wet weight minus the unit weight of water.

‡ Applicable for very compact glacial till. Unusually high unit weight values for tills are sometimes due not only to an extremely compact condition but to unusually high specific gravity values.

§ Applicable for hardpan.

General Note: Tabulation is based on $G = 2.65$ for granular soil, $G = 2.7$ for clays, and $G = 2.6$ for organic soils.

the highest porosity, namely, clays, are usually the least pervious since the individual void passages in clays are extremely small though the aggregate void volume is relatively large.

Relative Density. It is indicated in Table 2-3 that each soil type has an individual range of porosity or void ratio. To judge whether a soil at a given void ratio, e, is to be described as dense or loose, it is necessary to establish its existing void ratio with respect to the range of possible void ratios for the particular soil. This is expressed by the term *relative density*, D_d (sometimes, though not advisedly, referred to as *degree of compaction*), defined as,

$$D_d = \frac{e_{max} - e}{e_{max} - e_{min}} \qquad (2\text{-}11)$$

Table 2

LIVE LOADS ON PVC PIPE			
HEIGHT OF COVER (FT)	LIVE LOAD TRANSFERRED TO PIPE, (LBS/IN^2)		
	HIGHWAY H2O[1]	RAILWAY E80[2]	AIRPORT[3]
1	12.50		
2	5.56	26.39	13.14
3	4.17	23.61	12.28
4	2.78	18.40	11.27
5	1.74	16.67	10.09
6	1.39	15.63	8.79
7	1.22	12.15	7.85
8	0.69	11.11	6.93
10	*	7.64	6.09
12	*	5.56	4.76
14	*	4.17	3.06
16	*	3.47	2.29
18	*	2.78	1.91
20	*	2.08	1.53
22	*	1.91	1.14
24	*	1.74	1.05
26	*	1.39	*
28	*	1.04	*
30	*	0.69	*
35	*	*	*
40	*	*	*

[1] Simulates 20 ton truck traffic + impact.
[2] Simulates 80,000 lb/ft railway load + impact.
[3] 180,000 lbs. dual tandem gear assembly; 26-inch spacing between tires and 66-inch center-to-center spacing between fore and aft tires under a rigid pavement 12 inches thick + impact.
* Negligible live load influence.

Table 3

PRISM LOAD SOIL PRESSURE (LBS/IN2)					
HEIGHT OF COVER (FT)	SOIL UNIT WEIGHT (LBS/FT3)				
	100	110	120	125	130
1	0.69	0.76	0.83	0.87	0.90
2	1.39	1.53	1.67	1.74	1.81
3	2.08	2.29	2.50	2.60	2.71
4	2.78	3.06	3.33	3.47	3.61
5	3.47	3.82	4.17	4.34	4.51
6	4.17	4.58	5.00	5.21	5.42
7	4.86	5.35	5.83	6.08	6.32
8	5.56	6.11	6.67	6.94	7.22
9	6.25	6.88	7.50	7.81	8.13
10	6.94	7.64	8.33	8.68	9.03
11	7.64	8.40	9.17	9.55	9.93
12	8.33	9.17	10.00	10.42	10.83
13	9.03	9.93	10.83	11.28	11.74
14	9.72	10.69	11.67	12.15	12.64
15	10.42	11.46	12.50	13.02	13.54
16	11.11	12.22	13.33	13.89	14.44
17	11.81	12.99	14.17	14.76	15.35
18	12.50	13.75	15.00	15.63	16.25
19	13.19	14.51	15.83	16.49	17.15
20	13.89	15.28	16.67	17.36	18.06
21	14.58	16.04	17.50	18.23	18.96
22	15.28	16.81	18.33	19.10	19.86
23	15.97	17.57	19.17	19.97	20.76
24	16.67	18.33	20.00	20.83	21.67
25	17.36	19.10	20.83	21.70	22.57
26	18.06	19.86	21.67	22.57	23.47
27	18.75	20.63	22.50	23.44	24.38
28	19.44	21.39	23.33	24.31	25.28
29	20.14	22.15	24.17	25.17	26.18
30	20.83	22.92	25.00	26.04	27.08
31	21.53	23.68	25.83	26.91	27.99
32	22.22	24.44	26.67	27.78	28.89
33	22.92	25.21	27.50	28.65	29.79
34	23.61	25.97	28.33	29.51	30.69
35	24.31	26.74	29.17	30.38	31.60
36	25.00	27.50	30.00	31.25	32.50
37	25.69	28.26	31.67	32.12	33.40
38	26.39	29.03	32.50	32.99	34.31
39	27.08	29.79	33.33	33.85	35.21
40	27.78	30.56	34.17	34.72	36.11
41	28.47	31.32	35.00	35.59	37.01
42	29.17	32.08	35.83	36.46	37.92
43	29.86	32.85	36.67	37.33	38.82
44	30.56	33.61	37.50	38.19	39.72
45	31.25	34.38	38.33	39.06	40.63
46	31.94	35.14	39.17	39.93	41.53
47	32.64	35.90	40.00	40.80	42.43
48	33.33	36.67	41.67	41.67	43.33
49	34.03	37.43	42.53	42.53	44.24
50	34.72	38.19	43.40	43.40	45.14

Table 4

PVC Sewer / Drain Pipes
SDR 35, PWRIB
All have a minimum pipe stiffness of 46 psi
SDR 26 has a minimum pipe stiffness of 115 psi.

Table 5

AVERAGE VALUES OF MODULUS OF SOIL REACTION, E' (FOR INITIAL FLEXIBLE PIPE DEFLECTION)					
	PIPE BEDDING MATERIALS	E' FOR DEGREE OF COMPACTION OF PIPE ZONE BACKFILL (PSI)			
SOIL CLASS	SOIL TYPE (Unified Classification System[a])	Loose	Slight < 85% Proctor, < 40% relative density	Moderate 85% - 95% Proctor, 40% - 70% relative density	High > 95% Proctor, > 70% relative density
Class V	Fine-grained Soils (LL>50)[b] Soils with medium to high plasticity CH, MH, CH-MH	No data available; consult a competent soils engineer; Otherwise use E' = 0			
Class IV	Fine-grained Soils (LL < 50)Soils with medium to no plasticity CL, ML,ML-CL, with less than 25% coarse-grained particles	50	200	400	1,000
Class III	Fine-grained Soils (LL < 50)Soils with medium to no plasticity CL, ML,ML-CL, with more than 25% coarse-grained particles 1004001,0002,000 Coarse-grained Soils with Fines GM, GC, SM, SCC contains more than 12% fines	100	400	1,000	2,000
Class II	Coarse-grained Soils with Little or No Fines GW, GP, SW, SPC contains less than 12% fines	200	1,000	2,000	3,000
Class I	Crushed Rock	1,000	3,000	3,000	3,000
	Accuracy in Terms of Percentage Deflection	±2	±2	±1	±0.5

[a] ASTM Designation D 2487, USBR Designation E-3
[b] LL = Liquid limit
[c] Or any borderline soil beginning with one of these symbols (i.e. GM-GC, GC-SC)
[d] For ± 1% accuracy and predicted deflection of 3%, actual deflection would be between 2% and 4%.

Note: Values applicable only for fills less than 50ft (15m). Table does not include any safety factor. For use in predicting initial deflections only; appropriate Deflection Lag Factor must be applied for long-term deflections. If bedding falls on the borderline between two compaction categories, select lower E' value or average the two values. Percentage Proctor based on laboratory maximum dry density from test standards using about 12,500 ft-lb/cu ft (598,000 J/m^3) (ASTM D 698, AASHTO T-99, USBR Designation E-11). 1psi = 6.9kN/m^2.

Source: "Soil Reaction for Buried Flexible Pipe" by Amster K. Howard, U.S. Bureau of Reclamation, Denver Colorado. Reprinted with permission from American Society of Civil Engineers Journal of Geotechnical Engineering Division, January 1977, pp. 33-43.

Loading on PVC Pipe in a Wash Crossing

AASHTO H20 and HS20

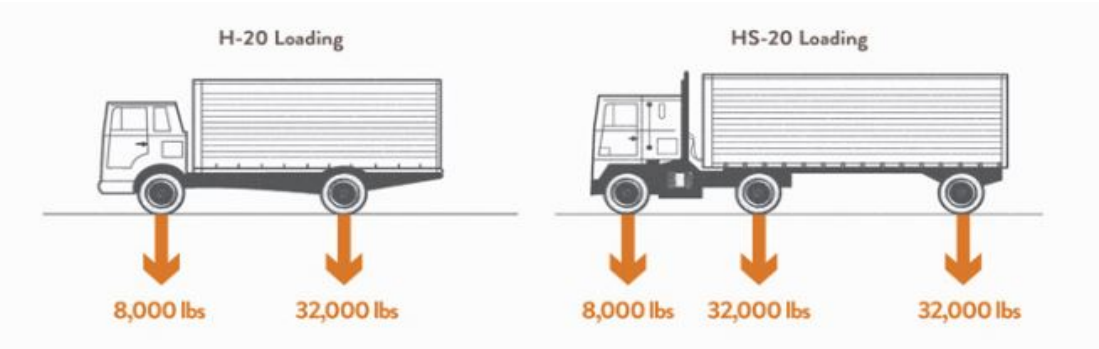

Scrapers[15]

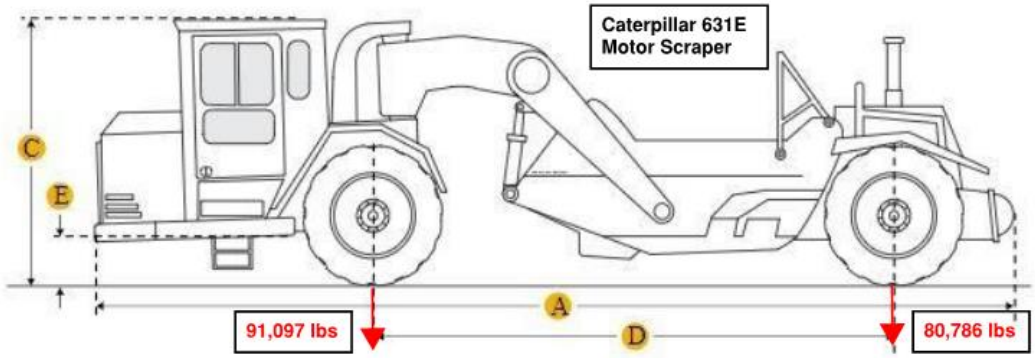

Bottom Dump[16]

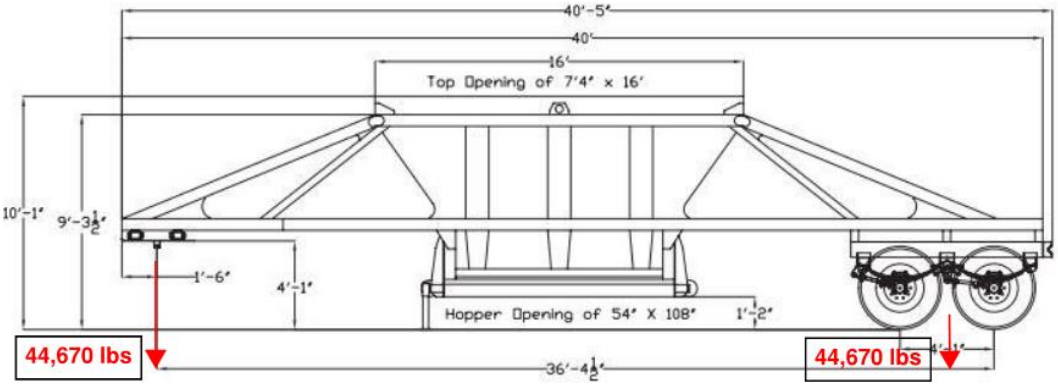

Water Pull[17]

Super 16 Dump Truck[18]

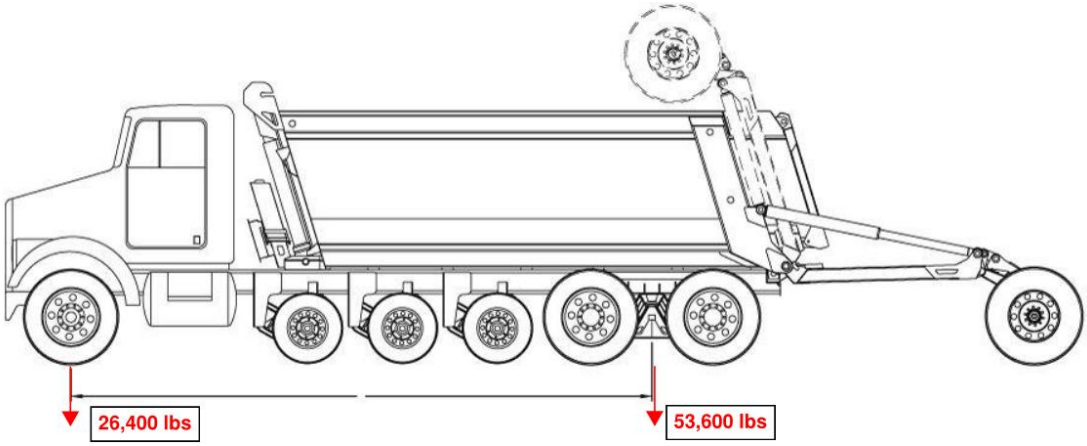

Large Bucket Loader[19]

Maintained Washes

Sewer Pipes, when crossing maintained washes, may experience very high loads from the heavy machinery used for maintenance. The standard HS20 loading used for paved streets and bridges is not adequate for these types of wash crossings.

Typically encountered maintenance vehicles include:

- Scrapers
- Bottom Dumps
- Water Pulls
- Super 16 Dump Trucks
- Large Bucket Loaders

Moderately sized vehicles were selected as examples, based on the assumption larger (mining) vehicles would have trouble gaining access to the wash using existing ramps. Weight distributions were then calculated, selecting the worst case scenario for analysis of pipe diametric deflection. The maximum pipe defection for gravity sewers RWRD and ASTM D2412 standards recommend is 5%. The Rillito River example used two scenarios to calculate the dead weight over the pipe: dry soils, 120 pcf, and wet soils (no surface water), 165 pcf. Total depth of cover is 7.4-feet which included 5.4-feet for the 100-year scour depth plus 2.0-feet of cover. Live loads are dissipated with depth and are usually neglected at depths greater than 8-feet for HS20 loading, but for this analysis, the selected maintenance vehicles were considered because have loadings greater than HS20.

The American Association of State Highway and Transportation Officials (AASHTO) design method in Section 3, LRFD Bridge Specifications Manual, entitled "Loads and Load Factors" was used for estimation of the effects of live loads at different depths.

Dual tire contact area of 20" x 10" (W x L) as a singular rectangle was used. For ease of calculation, this same area was utilized for single large tires on scrapers, water pulls, and front loaders.

$A = (W + \alpha H)(L + \alpha H)$

A = area of load distribution under fill, sf

W = width of dual-tire, ft	20"	= 1.67'
L = length of dual-tire, ft	10"	= 0.83'
α = 1.15 for granular soils, 1.00 for all other soil types		= 1.15
H = height of cover, ft		= 7.40'

A = (1.67' + 1.15(7.40'))(0.83' + 1.15(7.40'))

A = 95.08 sf (compare to 1.39 sf at surface)

Heaviest loading is scraper front tire - 91,097 lbs

P = wheel load P/A = 91,097 lbs/95.08 sf = 958.11 psf

958.11 psf / 144 si/sf = 6.65 psi = Live Load, W'

Utilizing the Modified Iowa Equation used previously:

% Deflection = [0.1(W' + P)100]/[0.149(PS) + 0.061(E')]

% Deflection = predicted percentage of diametric deflection

Live Load (W')	psi
Prism Load (aka Dead Load, P)	psi
Pipe Stiffness (PS)	psi
Modulus of Soil Reaction (E')	psi

Dry Soil

Soil column = 7.40'

Soil Unit Weight = 120 pcf

Prism Load (P) = 6.17 psi	from Table 3
Live Load (W') = 6.65 psi	Calculated
Pipe Stiffness (PS) = 46 psi	from Table 4
Modulus of Soil Reaction (E') = 2000 psi	from Table 5

% Deflection = [0.1(6.65 + 6.17)100]/[0.149(46) + 0.061(2000)]

% Deflection = 0.99 %

Much less than 7.50%, therefore PVC SDR 35 is adequate.

Wet Soil (no standing water on surface)

Soil column = 7.40'

Soil Unit Weight = 165 pcf

Prism Load (P) = 9.17 psi	Interpolated from Table 3
Live Load (W') = 6.65 psi	Calculated
Pipe Stiffness (PS) = 46 psi	from Table 4
Modulus of Soil Reaction (E') = 2000 psi	from Table 5

% Deflection = [0.1(6.65 + 9.17)100]/[0.149(46) + 0.061(2000)]

% Deflection = 1.23 %

Much less than 7.50%, therefore PVC SDR 35 is adequate.

Interpolated Table 3

Prism Load — Soil Unit Weight, pcf

Height	100	110	120	130	140	150	160	170
8'	5.56	6.11	6.67	7.22	7.78	8.33	8.89	9.44

Prism Load Soil Pressure, psi

165 pcf interpolated at conservative 8' soil height instead of 7.40'.

No impact loads considered due to pipe being buried.

Comparison of Loads

Height	HS20 Live Load W'	Dead Load Prism Load P	LL + DL W' + P	Pipe Stiff PS	Modulus E'	% Deflection
2	5.56	1.67	7.23	46	2000	0.56
3	4.17	2.50	6.67	46	2000	0.52
4	2.78	3.33	6.11	46	2000	0.47
5	1.74	4.17	5.91	46	2000	0.46
6	1.39	5.00	6.39	46	2000	0.50
7	1.22	5.83	7.05	46	2000	0.55
8	0.69	6.67	7.36	46	2000	0.57

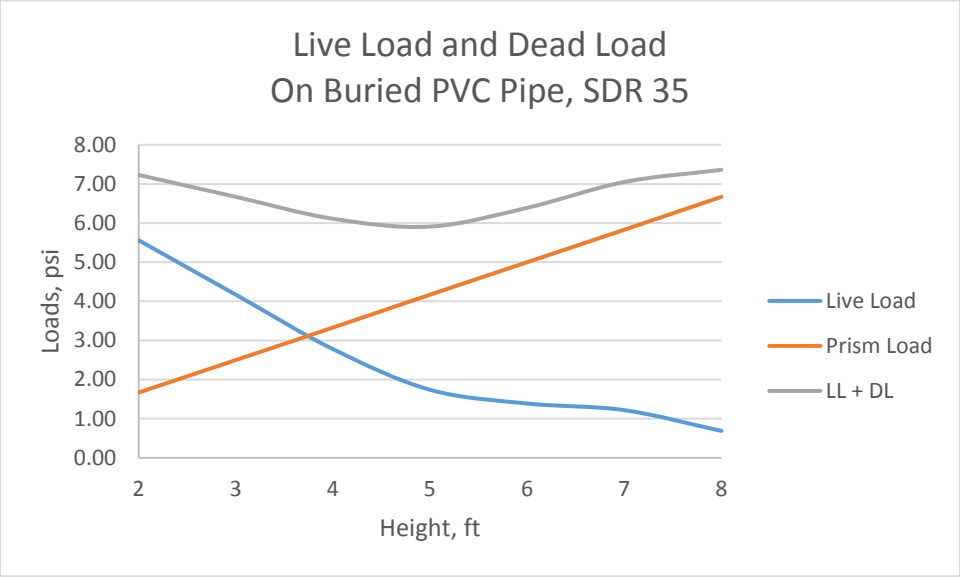

Comparison of Loads

A = (W + αH)(L + αH) = (1.67 + 1.15H)(0.83 + 1.15H)

A = area of load distribution under fill, sf
W = width of dual-tire, ft
L = length of dual-tire, ft
α = 1.15 for granular soils, 1.00 for all other soil types
H = height of cover, ft

Scraper	Wheel Load	91,097 lbs			
					Live Load
	Height	Area	sf	psf	psi
	2		12.43	7331.10	50.91
	3		21.91	4157.10	28.87
	4		34.05	2675.70	18.58
	5		48.82	1865.84	12.96
	6		66.25	1375.13	9.55
	7		86.31	1055.42	7.33
	8		109.03	835.55	5.80

Height	Live Load W' psi	Prism Load P psi	W' + P psi	Pipe Stiff PS psi	Modulus E' psi	% Deflection
2	50.91	1.67	52.58	46	2000	4.08
3	28.87	2.50	31.37	46	2000	2.43
4	18.58	3.33	21.91	46	2000	1.7
5	12.96	4.17	17.13	46	2000	1.33
6	9.55	5.00	14.55	46	2000	1.13
7	7.33	5.83	13.16	46	2000	1.02
8	5.80	6.67	12.47	46	2000	0.97

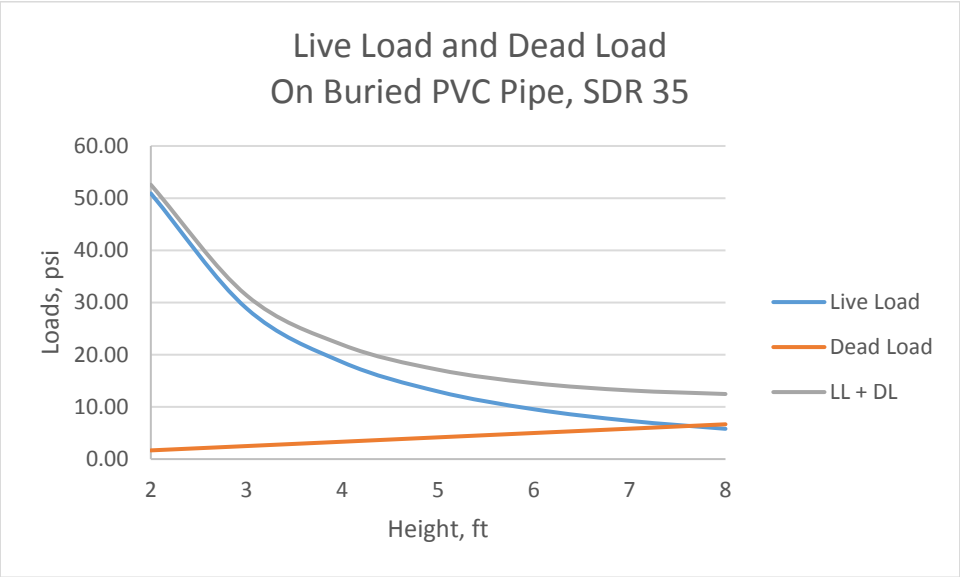

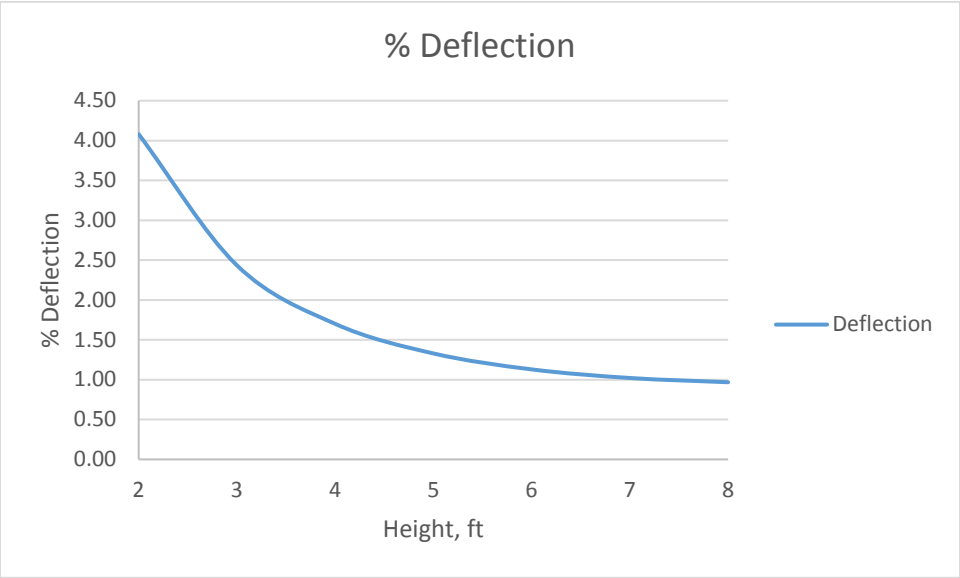
% Deflection
4.50
4.00
3.50
3.00
2.50
2.00
1.50
1.00
0.50
0.00
% Deflection
2
3
4
5
6
7
8
Height, ft
Deflection

24-inch DIP, Ina Road/CDO Wash crossing. Installed 1978, inspected 9/4/14

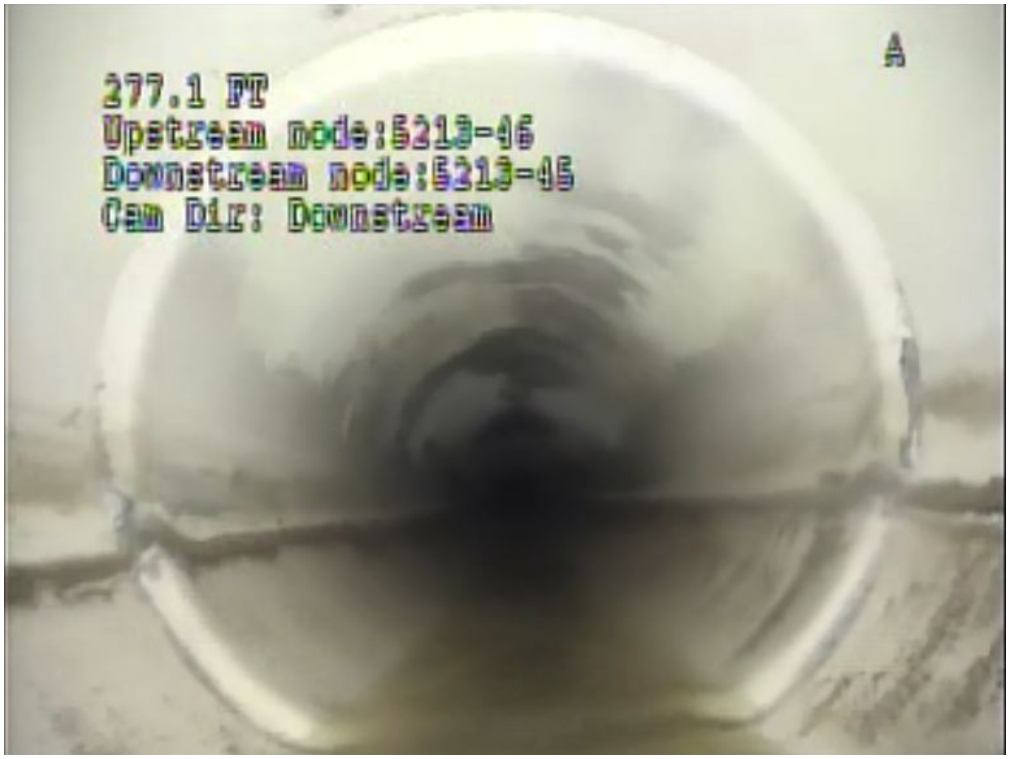

SMH 2744-02 – 2744-03, 15-inch, laid in 1989, inspected 2015, Gravity Sewer

12-inch DIP, Sahuarita, installed 5/2/2005, inspected 4/15/15, lining blistered

20-inch DIP, Arroyo Chico, installed 4/2/2008, inspected 9/15/2015, lining blistered

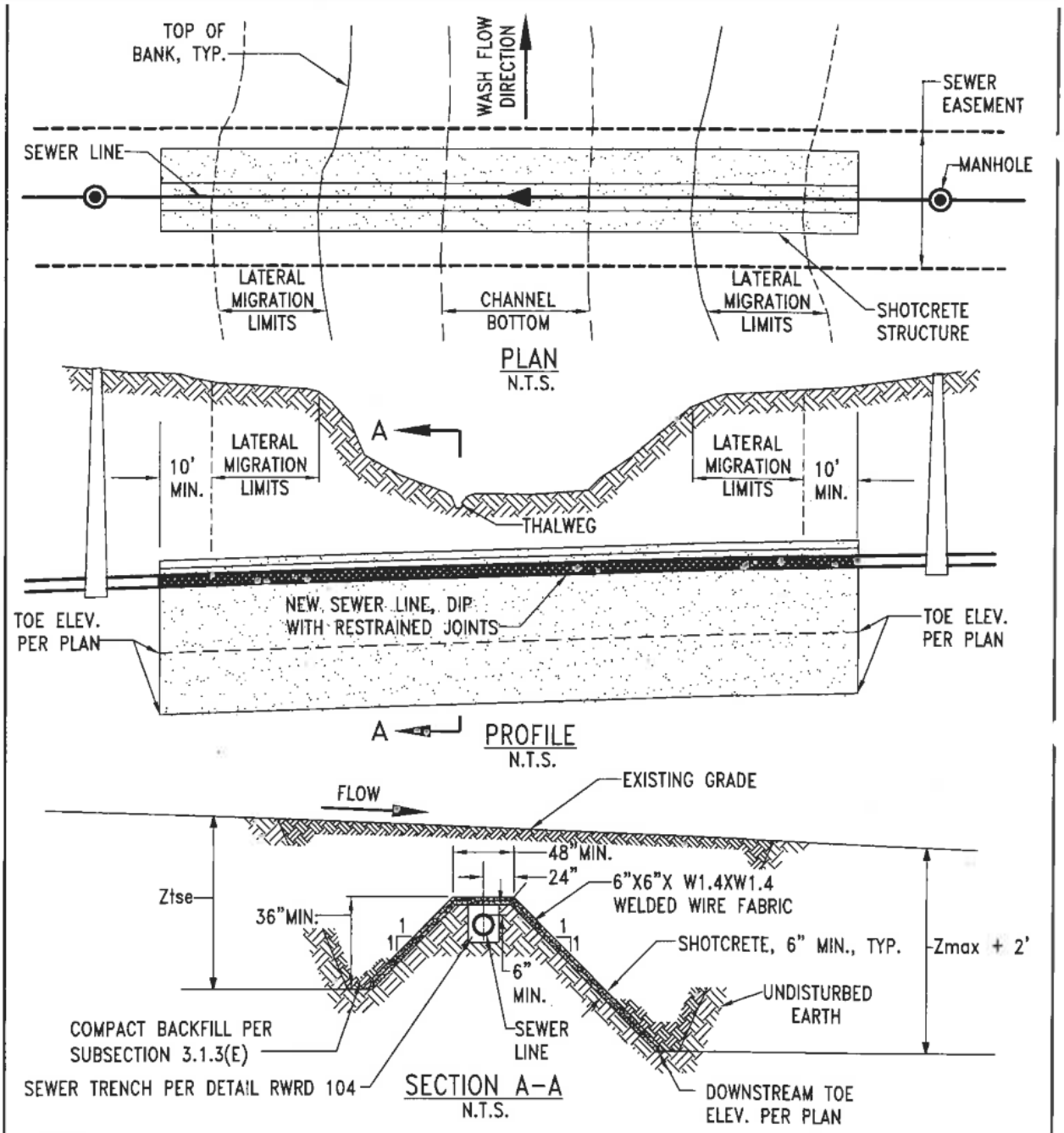

NOTES:

1. THIS DETAIL MAY BE USED IF APPROVED IN THE PLANS OR IN WRITING BY THE FIELD ENGINEER.
2. THIS DETAIL IS INTENDED FOR CASES WHERE IT IS NOT POSSIBLE TO PLACE THE SEWER LINE BELOW THE MAXIMUM PREDICTED SCOUR DEPTH, Zmax, AS DEFINED IN APPENDIX A, EDS.
3. THE TOE ELEVATION OF THE DOWNSTREAM AND UPSTREAM GRADE CONTROL STRUCTURES SHALL BE CALCULATED USING APPROPRIATE HYDRAULIC FORMULAS.
4. A DESIGN REPORT SHALL BE INCLUDED WITH THE SEWER PLAN SUBMITTAL (SEC. 5.1.11.A, EDS.)

ISSUED:	SPECIAL STANDARD DETAIL		DETAIL NO.
12/12	SCOUR PROTECTION FOR SEWER LINES	PIMA COUNTY WASTEWATER RECLAMATION	RWRD 113
REVISED: 06/17			SHEET 1 OF 1

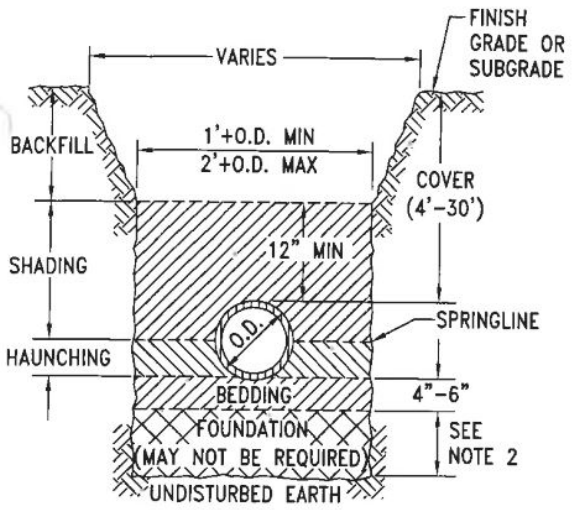

FLEXIBLE PIPE TRENCH DETAIL
N.T.S.

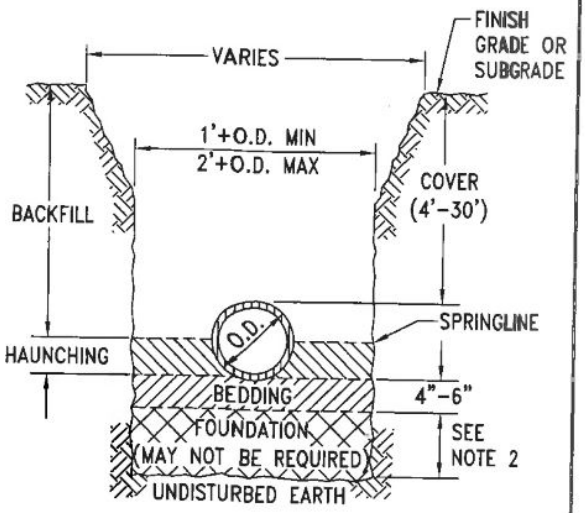

RIGID PIPE TRENCH DETAIL
N.T.S.

TABLE 1: APPROVED TRENCH MATERIALS AND GRADATION REQUIREMENTS

CRUSHED STONE (FOUNDATION, BEDDING, HAUNCHING & SHADING)		SAND (BEDDING, HAUNCHING & SHADING)		EXCAVATED NATIVE MATERIAL (BACKFILL)		SELECT IMPORT MATERIAL (BACKFILL & FOUNDATION)	
NOM. SIZE	% PASSING	NOM. SIZE	% PASSING	NOM. SIZE	% PASSING	NOM. SIZE	% PASSING
1"	100	1"	100	6"	100	3"	100
3/4"	90-100	#4	60-100	ALSO SEE SUBSECTION 3.1.2(C)		3/4"	60-100
3/8"	20-55	#200	0-10			#8	35-80
#4	0-10	MAX. P.I.=5				SUM OF #200 + P.I. ≤ 25	
#8	0-5	MAX. L.L.=30				ALSO SEE SUBSECTION 3.1.2(D)	
6.0 ≤ pH ≤ 12.0		6.0 ≤ pH ≤ 12.0					
ALSO SEE SUBSECTION 3.1.2(A)		ALSO SEE SUBSECTION 3.1.2(B)					

NOTES:

1. FOR SEWER LINES GREATER THAN 16 INCH DIAMETER OR COVER DEPTHS NOT CONFORMING TO THE STANDARD TRENCH DETAILS, SEE PLANS FOR MODIFIED TRENCH DETAILS.
2. FOUNDATION IS REQUIRED FOR OVEREXCAVATION SUCH AS FOR ROCK OR UNSUITABLE MATERIALS. SEE SUBSECTION 3.1.3(B) FOR MORE INFORMATION.
3. IN CASES WHERE GROUNDWATER IS ENCOUNTERED, INSTALLATION OF AN APPROVED GEOTEXTILE FABRIC ENCLOSING CRUSHED STONE SHALL BE REQUIRED FOR STABILIZATION.

ISSUED:	STANDARD DETAIL		DETAIL NO.
8/92	TYPICAL TRENCH FOR GRAVITY SEWER LINES	PIMA COUNTY WASTEWATER RECLAMATION	RWRD 104
REVISED: 06/17			SHEET 1 OF 1

Works Cited

1. “Depth of Burial for PVC Pipe”. *JM Eagle*. 2009. Technical Bulletin*:* p.1.

2. “Gravity Sewer”. *JM Eagle.* 2012. Technical Bulletin: p.2.

3. “Depth of Burial for PVC Pipe”. *JM Eagle*. 2009. Technical Bulletin*:* p.1.

4. “Depth of Burial for PVC Pipe”. *JM Eagle*. 2009. Technical Bulletin*:* p.2.

5. “Depth of Burial for PVC Pipe”. *JM Eagle*. 2009. Technical Bulletin*:* p.4.

6. “Depth of Burial for PVC Pipe”. *JM Eagle*. 2009. Technical Bulletin*:* p.3.

7. “Depth of Burial for PVC Pipe”. *JM Eagle*. 2009. Technical Bulletin*:* p.2.

8. “Depth of Burial for PVC Pipe”. *JM Eagle*. 2009. Technical Bulletin*:* p.2.

9. “Technical Research: A Comparison of Cured-In-Place Pipe (CIPP) Mechanical Properties: Laboratory vs. Field-Manufactured”. *Interplastic Corporation, Thermoset Resins Division*. (2008).p.5.

10. “Handbook of Ductile Iron Pipe (6th ed.)”.*Ductile Iron Pipe Research Association*. (1984).p. 94.

11. “Handbook of Ductile Iron Pipe (6th ed.)”.*Ductile Iron Pipe Research Association*. (1984).p. 94.

12. “Handbook of Ductile Iron Pipe (6th ed.)”.*Ductile Iron Pipe Research Association*. (1984).pgs. 84-85.

13. “Gravity Sewer”. *JM Eagle.* 2012. Technical Bulletin: p.2.

14. “Gravity Sewer”. *JM Eagle.* 2012. Technical Bulletin: p.1.

15. "RitchieSpecs". *Ritchie Bros. Auctioneers.* 2017. Technical Bulletin: Online.

16. "Pack Mule Stick-Built Bottom Dump Trailer". *Construction Trailer Specialists.* 2018. Technical Bulletin: Online.

17. "621G Water Distributor, Joint Services". *Catepillar Military 621G Water Distributor.* 2010. Technical Bulletin: Online.

18. "Bridge Laws/Weight Laws >> Arizona". *Strong Industries, Inc. Superdumps.*2018. Technical Bulletin: Online.

19. "WA500-8, Tier 4 Final Engine". *Komatsu Wheel Loader.*2017. Technical Bulletin: Online.

References

Ductile Iron Pipe Research Association. (1984). *Handbook of Ductile Iron Pipe* (6th ed.). Birmingham, AL: Jon C. Schladweiler.

Interplastic Corporation, Thermoset Resins Division. (2008). *Technical Research: A Comparison of Cured-In-Place Pipe (CIPP) Mechanical Properties: Laboratory vs. Field-Manufactured.* St.Paul, MN: Author.

JM Eagle. (2009). *Technical Bulletin: PVC Sewer Pipe Burial Depth Chart.* Livingston, NJ: Author.

JM Eagle. (2009). *Technical Bulletin: Depth of Burial for PVC Pipe.* Livingston, NJ: Author.

John Wiley & Sons. (1969).*Basic Soils Engineering.* Canada: B.K. Hough.

PWPipe. (2002). *Gasketed PVC Sewer Pipe.* Eugene, OR: Author.

Uni-Bell PVC Pipe Association. (2001). *Handbook of PVC Pipe: Design & Construction.* Dallas, TX: Author.

Caterpillar 631E Motor Scraper for Sale. (2017). www.ritchiespecs.com.

Caterpillar Military 621G Water Distributor. (2010). *621G Water Distributor, Joint Services.* s7d2.scene7.com/is/content/Caterpillar/C10033679.

Construction Trailer Specialists. (2018). *Pack Mule Stick-Built Bottom Dump Trailer.* www.constructiontrailerspecialists.com.

Komatsu Wheel Loader. (2017). *WA500-8, Tier 4 Final Engine*. www.komatsuwalkaround.com/wheel-loaders/wa500-8

Strong Industries, Inc. Superdumps. (2018). *Bridge Laws/Weight Laws >> Arizona.* www.superdumps.com/bridge_laws/?state=Arizona